CONTRACT NO.
70-12-7 #45

PROJECT MANUAL

VOLUME 1

FOR

North Bay Water Reuse Program - Sonoma Valley Effluent Reservoir R5

SONOMA VALLEY COUNTY SANITATION DISTRICT

FEBRUARY 2011

NOTE
The only way to ensure receipt of all Bidding Documents (including Addenda) is to register as a Planholder with Owner.

DOCUMENT 00001

PROJECT MANUAL

Volume 1

for

BAY WATER REUSE PROGRAM - SONOMA VALLEY EFFLUENT RESERVOIR R5

SONOMA VALLEY COUNTY SANITATION DISTRICT

BOARD OF DIRECTORS

Laurie Gallian
Valerie Brown
Efren Carrillo

Advertisement Date: February 2011

Bid Date: Tuesday, March 8, 2011

Contract Number: 70-12-7 #45

©2011 Sonoma Valley County Sanitation District

DOCUMENT 00007

SEALS PAGE

Sonoma Valley County Sanitation District

REGISTERED PROFESSIONAL ENGINEER
ERIK S. BROWN
No. 73904
CIVIL
STATE OF CALIFORNIA

Erik S. Brown, P. E. Date: 1/24/11

REGISTERED PROFESSIONAL ENGINEER
Craig A. Olson
No. 39819
Exp. 12/31/2011
STATE OF CALIFORNIA

Craig A. Olson, P.E. Date: 1/24/11 1/24/11

crt

END OF DOCUMENT

DOCUMENT 00010

TABLE OF CONTENTS

STANDARD EDITION

(Volume 1)

INTRODUCTORY INFORMATION

Document	Title
00001	Title Page
00007	Seals Page
00010	Table of Contents

BIDDING REQUIREMENTS

Document	Title
00100	Advertisement for Bids
00200	Instructions to Bidders
00202	Pre-Bid Site Visit Vicinity Map
00203	Bid Submittal Vicinity Map
00210	Indemnity and Release Agreement
00320	Geotechnical Data and Existing Conditions
00335	Hazardous Materials Documentation
00400	Bid Form
00411	Bond Accompanying Bid
00420	Bidder Registration Form
00430	Subcontractors List
00450	Statement of Qualifications for Construction Work
00457	Document 00457 (Prime Contractor/Recipient Selected Disadvantaged Business Enterprises [DBE])
00458	DBE Subcontractor Utilization Form
00481	Non-Collusion Affidavit

CONTRACTING REQUIREMENTS

Document	Title
00505	Notice of Intent to Award for Construction
00510	Notice of Award
00520	Agreement
00550	Notice to Proceed
00610	Construction Performance Bond
00620	Construction Labor and Material Payment Bond
00630	Guaranty
00650	Agreement and Release of Any and All Claims
00660	Substitution Request Form
00670	Escrow Bid Documents
00680	Escrow Agreement for Security Deposits in Lieu of Retention

CONDITIONS OF THE CONTRACT

Document	Title
00700	General Conditions
	1. General
	2. Bidding
	3. Contract Award and Commencement of the Work
	4. Bonds and Insurance
	5. Drawings and Specifications
	6. Construction By Owner or by Separate Contractors
	7. Owner and Payment
	8. Control of the Work
	9. Warranty, Guaranty, and Inspection of Work
	10. Contractor's Organization and Equipment
	11. Prosecution and Progress of the Work
	12. Claims by Contractor
	13. Legal and Miscellaneous
	14. Modifications of Contract Documents
	15. Time Allowances
	16. Working Conditions and Prevailing Wages
00800	Supplementary Conditions
00805	Supplementary Conditions – Hazardous Materials
00910	Addenda

SPECIFICATIONS

Division 1 - General Requirements

Section	Title
01100	Summary
	– Summary
	– Submittals
	– Work Covered by Contract Documents
	– Bid Items, Allowances, and Alternates
	– Work Under Other Contracts
	– Future Work
	– Work Sequence
	– Work Days and Hours
	– Shutdown For Discovery of Cultural Resources
	– Cooperation of Contractor and Coordination with Other Work
	– Partial Occupancy/Utilization Requirements
	– Contractor Use of Site
	– Air Quality Standards
	– Construction Staking and Monument Protection
	– Protection of Existing Structures and Underground Facilities
	– Permits
	– Work at Wastewater Treatment Plant
	– Rights-of-Way
	– Document Tracking
	– Products Ordered in Advance
	– Owner-Furnished Products
01200	Price and Payment Procedures
01250	Modification Procedures
01315	Project Meetings
01320	Progress Schedules and Reports
01330	Submittal Procedures
01410	Regulatory Requirements
01411	Regulatory Requirements – Hazardous Materials
01420	References and Definitions
01450	Quality Control
01500	Temporary Facilities and Controls
01540	Site Security and Safety
01600	Product Requirements
01740	Cleaning
01741	Construction Material Waste Management Plan
01770	Contract Closeout
01780	Project Record Documents

Division 2 - Site Construction

Section	Title
02072	Demolition, Cutting, and Patching
02110	Excavation, Removal, and Handling of Hazardous Materials
02230	Site Clearing
02300	Earthwork
02316	Trenching, Backfilling, and Compacting for Utilities
02370	Soil Erosion and Sedimentation Control
02605	High-Density Polyethylene (HDPE) Membrane Liner
02745	Asphaltic Concrete Vehicular Paving
02825	Chain Link Fence and Gates
02935	Hydroseeding

Division 3 - Concrete

Section	Title
03002	Concrete and Control Density Fill

Division 4 - Masonry (Not Used)

Division 5 – Metals

Section	Title
05500	Metal Fabrications
05522	Aluminum Railings

Division 6 – Wood and Plastics (Not Used)

Division 7 – Thermal and Moisture Protection

Section	Title
07900	Joint Sealants

Division 8 – Doors and Windows

Section	Title
08305	Access Doors

Division 9 - Finishes

Section	Title
09905	Painting and Protective Coatings

Division 10 – Specialties

Section	Title
10405	Identification, Stenciling, and Tagging Systems

Division 11 – Equipment

Section	Title
11005	Equipment: Basic Requirements
11060	Pumping Equipment: Basic Requirements
11072	Pumping Equipment: Vertical Turbine (Line Shaft)
11091	Automatic Self-Cleaning Strainers

Division 12 – Furnishings (Not Used)

Division 13 – Special Construction

Section	Title
13121	Metal Canopy Systems
13441	Instrumentation for Process Control: Basic Requirements
13442	Primary Elements and Transmitters
13446	Control Auxiliaries
13448	Control Panels and Enclosures
13455	Programmable Logic Controller (PLC) Modifications

Division 14 – Conveying Systems (Not Used)

Division 15 – Mechanical

Section	Title
15061	Pipe and Pipe Fittings: Basic Requirements
15062	Pipe: Steel
15063	Pipe: Ductile Iron
15064	Pipe: Plastic
15100	Valves: Basic Requirements
15102	Gate Valves
15103	Butterfly Valves
15105	Globe Valves
15106	Check Valves
15114	Miscellaneous Valves
15115	Water Control Gates

Division 16 – Electrical

Section	Title
16010	Electrical: Basic Requirements
16065	Grounding
16125	Wire and Cable: 600 Volt and Below
16130	Raceway and Boxes
16135	Electrical: Exterior Underground
16140	Wiring Devices
16265	Variable Frequency Drives - Low Voltage
16410	Safety Switches
16441	Panelboards
16442	Motor Control Equipment
16460	Dry-Type Transformers
16491	Low Voltage Surge Protective Devices (SPD)
16490	Overcurrent and Short Circuit Protective Devices
16493	Control Equipment Accessories
16500	Interior and Exterior Lighting

(Volume 2)

DRAWINGS

(See Drawing List on Drawing No. G01)

END OF DOCUMENT

BIDDING REQUIREMENTS

DOCUMENT 00100

ADVERTISEMENT FOR BIDS

1. **NOTICE.** The Sonoma Valley County Sanitation District ("Owner"), a local district of the State of California, hereby gives notice that it will accept Bids for construction of the following public work:

Contract Number 70-12-7 #45
North Bay Water Reuse Program -
Sonoma Valley Effluent Reservoir R5

2. **DESCRIPTION AND LOCATION OF THE WORK.** The Work consists of construction of a recycled water storage reservoir to the north of the Sonoma Valley County Sanitation District Wastewater Treatment Plant (WWTP), in an unincorporated area of Sonoma County outside the limits of the City of Sonoma. The reservoir will store approximately 100 acre-feet of recycled water. The Work includes, but is not limited to, construction of a recycled water storage reservoir lined with a high-density polyethylene (HDPE) liner; inlet, outlet, overflow piping, concrete pumping station, and pump; 18-inch recycled water pipeline; and electrical and telemetry work to connect the reservoir into the WWTP and recycled water system. Bidding Documents contain the full description of the Work.

3. **ESTIMATED PROJECT COST RANGE:** $2,000,000 to $2,500,000.

4. **REQUIRED CONTRACTOR'S LICENSE(S).** A California "A" contractor's license is required to Bid this Contract. Joint ventures must secure a joint venture license prior to award of this Contract. Removal, handling, and/or disposal of hazardous materials may by law require hazardous substance removal certification by the Contractor's State License Board.

5. **CONTACT INFORMATION.**

Mailing address:
Sonoma Valley County Sanitation District
404 Aviation Boulevard
Santa Rosa, CA 95403-9019

Project Engineer:
Erik S. Brown, P. E.

Phone: 707-547-1900

Fax: 707-524-3782

Email: BidderQuestions@scwa.ca.gov

Office:
Sonoma Valley County Sanitation District
c/o Sonoma County Water Agency
404 Aviation Boulevard
Santa Rosa, CA 95403-9019

Website address:
www.sonomacountywater.org

6. **ELECTRONIC ACCESS TO BIDDING DOCUMENTS.** Bidders may view Bidding Documents on Owner's website: www.sonomacountywater.org. The only way to ensure receipt of Addenda is to register as a Planholder with Owner. Bidders can register on the website or at Owner's office.

7. PROCUREMENT OF BIDDING DOCUMENTS. Bidders may examine Bidding Documents at Owner's Office. Bidders may obtain hard copies of Bidding Documents upon registration as a Planholder through Owner's office and payment of a non-refundable fee of $20 for each copy. Owner will accept cash or checks payable to "Sonoma Valley County Sanitation District." Bidding Documents need not be returned to Owner. Bidding Documents contain a reduced set of Drawings. Bidders may arrange to obtain full-size Drawings from Draftech Blueprinting, Inc., 1544 Terrace Way, Santa Rosa, CA 95405, 707-578-9442 for an additional charge to be paid directly to Draftech Blueprinting, Inc.

Note
Obtaining documents from any source other than Owner does not guarantee receipt of Addenda. The only way to ensure receipt of Addenda is to register as a Planholder with Owner.

8. FUNDING.

A. Owner advises potential Bidders that the Project is funded in whole or part with funds through the following:
   1. United States Department of the Interior, Bureau of Reclamation, Title XVI: Specific requirements apply. Document 01415 (Regulatory Requirements – Funding) contains further description of the requirements.
   2. United States Department of the Interior, Bureau of Reclamation, American Recovery and Reinvestment Act of 2009: Specific requirements apply. Document 01415 (Regulatory Requirements – Funding) contains further description of the requirements.

B. Owner has conducted an outreach effort and created a DBE solicitation list. The list can be viewed on Owner's website. Bidder represents and agrees that in submitting its Bid, it is not relying on any information regarding the DBE Solicitation List supplied by Owner.

9. MANDATORY PRE-BID SITE VISIT. Owner will conduct Pre-Bid Site Visits at 10:00 a.m. on Tuesday, February 15, 2011, and at 2:00 p.m. on Thursday, February 17, 2011, at the Site located at 22675 8th Street East, Sonoma, California.

A map showing the meeting place for the Pre-Bid Site Visit(s) is available on Owner's website. Bidders must attend one of the Pre-Bid Site Visits and sign an attendance roster as a condition to bidding.

Bidders will be provided the opportunity to investigate conditions or otherwise conduct invasive investigations, explorations, tests, or studies at the Pre-Bid Site Visit, subject to delivering an executed Document 00210 (Indemnity and Release Agreement) and providing an insurance certificate as described therein by noon of the Day prior to the Pre-Bid Site Visit. This will be the Bidders' only opportunity to investigate conditions at the Site. Bidders who intend only to observe Site conditions and not conduct such examinations are not required to provide an executed Document 00210 (Indemnity and Release Agreement) or an insurance certificate for the Pre-Bid Site Visit. The Pre-Bid Site Visit is merely a showing of the Site and existing conditions and will not provide an opportunity for Bidders to have questions answered. Bidders are encouraged, however, to submit written questions. Owner will transmit to all Registered Planholders (all parties recorded as having received Bidding Documents) such Addenda as Owner in its discretion considers necessary in response to written questions. Bidding Documents will not be available at the Pre-Bid Site Visit.

Note
Attendance at the work showing does not guarantee receipt of Addenda. The only way to ensure receipt of Addenda is to register as a Planholder with Owner.

Bidders shall not rely on oral statements. Oral statements will not be binding or legally effective.

Other Pre-Bid Site Visits may be scheduled at Owner's sole discretion, depending on staff availability.

10. **RESTRICTIONS ON SUBSTITUTIONS.** As a limitation on Bidder's privilege to substitute "or equal" items, Owner has found that certain items are designated as Owner standards and certain items are designated to match existing items in use on a particular public improvement either completed or in the course of completion or are available from one source. As to such items, Owner will not permit substitution. Such items are: Air valves.

11. **INSTRUCTIONS.** Bidders shall refer to Document 00200 (Instructions to Bidders) for required documents and items to be submitted in sealed envelopes for deposit into the Bid boxes, located at Owner's Office, and applicable times for submission.

12. **STATEMENTS OF QUALIFICATIONS.** Each Bidder shall be required to submit, in accordance with Document 00200 (Instructions to Bidders) and Document 00450 (Statement of Qualifications for Construction Work), a Statement of Qualifications.

13. **BID SUBMISSION.** Sealed Bids will be received at Owner's Office (see paragraph 5) until 10:00 a.m., Tuesday, March 8, 2011. Owner's staff will determine official time and will call out the designated time in the Bid reception area of Owner's Office, stating that the period for accepting Bids is closed. The Bid opening will be in accordance with procedures set forth in Document 00200 (Instructions to Bidders).

14. **BID PREPARATION COST.** Bidders are solely responsible for the cost of preparing their Bids.

15. **CONTRACT TIME.** Work shall be completed within 158 Days from the date when Contract Time commences to run.

16. **PAYMENT BONDS.** In accordance with California Civil Code Section 3247, payment bonds as set forth in Document 00200 (Instructions to Bidders) will be required from the successful Bidder.

17. **PREVAILING WAGE LAWS.** The successful Bidder must comply with all prevailing wage laws applicable to the Project, and related requirements contained in the Contract Documents.

18. **SUBSTITUTION OF SECURITIES.** Owner will permit successful Bidder to substitute securities for retention monies withheld to ensure performance of Contract, as set forth in Document 00680 (Escrow Agreement for Security Deposits in Lieu of Retention), in accordance with California Public Contract Code, Section 22300. By this reference, Document 00680 (Escrow Agreement for Security Deposits in Lieu of Retention) is incorporated in full in this Document 00100.

19. RESERVATION OF RIGHTS. Owner specifically reserves the right, in its sole discretion, to reject any or all Bids, or re-bid, or to waive inconsequential deviations from Bid requirements not involving time, price, or quality of the Work.

20. INTERNATIONAL ORGANIZATION FOR STANDARDIZATION (ISO). Owner is currently pursuing certification for ISO 9001 and 14001. Bidding Documents and Contract Documents contain information and requirements related to ISO.

By order of the Sonoma County Water Agency's General Manager acting on behalf of Sonoma Valley County Sanitation District.

END OF DOCUMENT

DOCUMENT 00200

INSTRUCTIONS TO BIDDERS

STANDARD EDITION

Bids are requested for a general construction contract, or work described in general, as follows:

North Bay Water Reuse Program -
Sonoma Valley Effluent Reservoir R5

1. **RECEIPT OF BIDS.** Sealed Bids will be received at Owner's Office (see paragraph 3 of this Document 00200 and Document 00203 [Bid Submittal Vicinity Map]) on Tuesday, March 8, 2011. Owner will accept Bids only from Bidders duly licensed in accordance with the California Business & Professions Code. Owner will receive Bids in two separate opaque sealed 10" x 13" envelopes, labeled Envelope "A" and Envelope "B," each containing the respective items described in paragraphs 6 and 7 of this Document 00200. All Bid envelopes will be time-stamped to reflect their submittal time. **Envelope "A" shall be due by 10:00 a.m., and Envelope "B" shall be due by 11:00 a.m.** Owner's staff will determine official time and will call out the specified time in the Bid reception area of Owner's Office. Owner will reject all Bids received after the specified time and will return such Bids to Bidders unopened. Bidders must submit Bids in accordance with this Document 00200.

2. **BID OPENING.** Owner will open all Bidders' Envelopes "A" at 11:00 a.m. on the date specified in paragraph 1 above, initially evaluate them for responsiveness, and determine an Apparent Low Bidder as specified herein. Owner will not open Envelopes "B" publicly and, except for the Apparent Low Bidder's Envelope "B" (or as otherwise provided in this Document 00200), they will remain unopened.

3. **CONTACT INFORMATION.**

Mailing address:
Sonoma Valley County Sanitation District
404 Aviation Boulevard
Santa Rosa, CA 95403-9019

Project Engineer:
Erik S. Brown, P.E.

Phone: 707-547-1900

Fax: 707-524-3782

Email: BidderQuestions@scwa.ca.gov

Office:
Sonoma Valley County Sanitation District
c/o Sonoma County Water Agency
404 Aviation Boulevard
Santa Rosa, CA 95403-9019

Website address:
www.sonomacountywater.org

4. **MANDATORY PRE-BID SITE VISIT.** Owner will conduct Pre-Bid Site Visits at 10:00 a.m. on Tuesday, February 15, 2011, and at 2:00 p.m. on Thursday, February 17, 2011, at the Site located at 22675 8th Street East, Sonoma, California.

A map showing the meeting place for the Pre-Bid Site Visit(s) is included in Document 00202 (Pre-Bid Site Visit Vicinity Map). Bidders must attend one of the Pre-Bid Site Visits and sign an attendance roster as a condition to bidding.

Bidders will be provided the opportunity to investigate conditions or otherwise conduct invasive investigations, explorations, tests, or studies at the Pre-Bid Site Visit, subject to delivering an executed Document 00210 (Indemnity and Release Agreement) and providing an insurance certificate as described therein by noon of the Day prior to the Pre-Bid Site Visit. This will be the Bidders' only opportunity to investigate conditions at the Site. Bidders who intend only to observe Site conditions and not conduct such examinations are not required to provide an executed Document 00210 (Indemnity and Release Agreement) or an insurance certificate for the Pre-Bid Site Visit. The Pre-Bid Site Visit is merely a showing of the Site and existing conditions and will not provide an opportunity for Bidders to have questions answered. Bidders are encouraged, however, to submit written questions. Owner will transmit to all Registered Planholders (all parties recorded as having received Bidding Documents) such Addenda as Owner in its discretion considers necessary in response to written questions. Bidding Documents will not be available at the Pre-Bid Site Visit.

Attendance at the work showing does not guarantee receipt of Addenda. The only way to ensure receipt of Addenda is to register as a Planholder with Owner.

Bidders shall not rely on oral statements. Oral statements will not be binding or legally effective.

Other Pre-Bid Site Visits may be scheduled at Owner's sole discretion, depending on staff availability.

5. BID SUBMISSION. Bidder shall mark its Bid envelopes on the outside with Bidder's name and the following:

BID FOR THE SONOMA VALLEY COUNTY SANITATION DISTRICT,
CONTRACT NUMBER 70-12-7 #45,
NORTH BAY WATER REUSE PROGRAM -
SONOMA VALLEY EFFLUENT RESERVOIR R5
"Envelope A" or "Envelope B" (as appropriate)

Bids shall be deemed to include the written responses of the Bidder to any questions or requests for information of Owner made as part of Bid evaluation process after submission of Bid. Bidder's failure to submit all required documents strictly as required entitles Owner to reject the Bid as non-responsive. The submission of a Bid does not commit Owner to award a contract for the Project, to pay costs incurred in the preparation of a Bid, or to procure or contract for any goods or services.

6. CONTENTS OF ENVELOPE "A" - BID PRICE. Envelope "A" shall include:

A. Document 00400 (Bid Form) completed in accordance with paragraph 8 of this Document 00200.
B. Bid security completed in accordance with paragraph 9 of this Document 00200.
C. Document 00430 (Subcontractors List) in accordance with paragraph 10 of this Document 00200 and Document 00430 (Subcontractors List).
D. Document 00457 (Prime Contractor/Recipient Selected Disadvantaged Business Enterprises [DBE]).
E. Document 00481 (Non-Collusion Affidavit).

7. CONTENTS OF ENVELOPE "B" - BIDDER QUALIFICATIONS. Envelope "B" shall include:

A. Statement of Qualifications including all necessary attachments and supporting documents submitted in accordance with paragraph 11 of this Document 00200 and Document 00450 (Statement of Qualifications for Construction Work).
B. Document 00420 (Bidder Registration Form). Bidder must complete this form and include comprehensive answers to all questions.

8. REQUIRED BID FORMS. All Bidders must submit Bids using, where applicable, documents supplied in this Project Manual, including without limitation Document 00400 (Bid Form), Document 00420 (Bidder Registration Form), Document 00430 (Subcontractors List), and Document 00450 (Statement of Qualifications for Construction Work). Owner will reject as non-responsive any Bid not submitted on the required forms. Bids must be full and complete. Bidders must complete all Bid items and supply all information required by Bidding Documents. Owner reserves the right in its sole discretion to reject any Bid as non-responsive as a result of any error or omission in the Bid. Bidders may not modify the Bid Form or qualify their Bids. Bidders must submit clearly and distinctly written Bids. Bidders must clearly make any changes in their Bids by crossing out original entries, entering new entries, and initialing new entries. Owner reserves the right to reject any Bid not clearly written.

9. REQUIRED BID SECURITY. Bidders must submit with their Bids either cash, a cashier's check, or certified check from a responsible bank in the United States, or corporate surety bond furnished by a surety authorized to do business in the State of California, of not less than ten percent of amount of Total Bid price, payable to "Sonoma Valley County Sanitation District." All Bidders choosing to submit a surety bond must submit it on the required form, Document 00411 (Bond Accompanying Bid). Owner will reject as non-responsive any Bid submitted without the necessary Bid security.

Owner may retain Bid security of other than the Apparent Low Bidder for a period of 60 Days after issuance of the Notice of Award. After award, Owner will return to the respective unsuccessful Bidders their Bid securities and Bid bonds.

10. REQUIRED SUBCONTRACTORS LIST. All Bidders must submit with their Bids the required information on all Subcontractors in Document 00430 (Subcontractors List) for those Subcontractors who will perform any portion of Work, including labor, rendering of service, or specially fabricating and installing a portion of the Work or improvement according to detailed drawings contained in the plans and specifications, in excess of one half of one percent of total Bid. Violation of this requirement may result in Bid being deemed non-responsive and not being considered.

11. REQUIRED STATEMENT OF QUALIFICATIONS. In order for a Bidder to be eligible to Bid on this Contract, it must submit a Statement of Qualifications responsive to the requirements identified in Document 00450 (Statement of Qualification for Construction Work) ("SOQ"), including without limitation qualification information for Subcontractors and schedulers, if any. Except as otherwise provided in paragraphs 20 and 21 of this Document 00200 or in Document 00450 (Statement of Qualification for Construction Work), Owner will make final determinations regarding Bidder responsibility based solely upon the SOQ submitted as part of Envelope "B" on Bid day. Information in the SOQ shall be current.

12. OTHER REQUIREMENTS PRIOR TO BIDDING. Submission of Bid signifies Bidder's careful examination of Bidding Documents and complete understanding of the nature, extent, and location of Work to be performed. As a condition to Bidding, Bidder must complete tasks listed in Document 00520 (Agreement), Article 5. Submission of Bid shall constitute Bidder's express representation to Owner that Bidder has fully completed these tasks.

13. EXISTING DRAWINGS AND GEOTECHNICAL DATA AND HAZARDOUS MATERIALS DOCUMENTATION. Bidders may examine any available existing conditions information (e.g., record documents, specifications, studies, drawings of previous work) and applicable environmental assessment information (if any) regarding the Project by giving Owner reasonable advance notice. Document 00320 (Geotechnical Data and Existing Conditions) and Document 00335 (Hazardous Materials Documentation) apply to all supplied existing conditions information and geotechnical reports and all other information supplied regarding existing conditions either above ground or below ground.

14. BIDDER QUESTIONS AND ADDENDA. Bidders must direct all questions about the meaning or intent of Bidding Documents to Owner (Attention: Project Engineer) in writing at the address, fax number, or email indicated in Paragraph 3. Interpretations or clarifications considered necessary by Owner in response to such questions will be issued by Addenda. Addenda will be written and will be issued to each Registered Planholder to the address, fax number, or email supplied to Owner by Bidder. Owner may not answer questions received less than fourteen Days prior to the date for opening Bids. Only questions answered by formal written Addenda will be binding. Oral and other interpretations or clarifications will be without legal effect.

A. Addenda may also be issued to modify the Bidding Documents as deemed advisable by Owner.
B. Addenda shall be acknowledged by number with signature in Document 00400 (Bid Form) and shall be part of the Contract Documents. A complete listing of Addenda may be secured from Owner.
C. The only way to ensure receipt of Addenda is to register as a Planholder with Owner.

15. SUBSTITUTIONS. Bidders must base their Bids on products and systems specified in Contract Documents or listed by name in Addenda.

A. Except as provided in paragraph 15.D of this Document 00200, Owner will consider substitution requests only for "or equal items." Bidders wanting to use "or equal" item(s) may submit Document 00660 (Substitution Request Form) no later than 14 Days prior to submitting their Bids. After that date, Owner will not accept "or equal" substitution requests. To assess "or equal" acceptability of product or system, submittals of substitutions shall contain the information required in Document 00660 (Substitution Request Form) and set forth in Section 01600 (Product Requirements). Insufficient information will be grounds for rejection of substitution. Owner shall, within a reasonable period of time after having received a Request for Substitution, issue in writing its decision as to whether the proposed substitute item is an Equal item. Owner's decision shall be conclusive on all Bidders.
B. Approved substitutions shall be listed in Addenda and become part of the Contract Documents.
C. Substitutions may be requested after submitting Bids and Award of Contract only in accordance with requirements specified in Section 01600 (Product Requirements).

D. As further limitation on Bidder's privilege to substitute items, Owner has found that:
   1. Certain items are designated as Owner standards and certain items are designated to match existing items in use on a particular public improvement, either completed or in the course of completion. As to such items, Owner will not permit substitution. Owner will not permit substitutions for the following items:
      a. Air Valves
   2. Certain items are designated in order that a field test or experiment may be made to determine the product's suitability for future use. As to such items, Owner will not permit substitution. Owner will not permit substitutions for the following items:
      a. None.
   3. Certain necessary items are only available from one source. As to such items, Owner will not permit substitution. Owner will not permit substitutions for the following items:
      a. None.

16. **WAGE RATES.** Copies of the general prevailing rates of per diem wages for each craft, classification, or type of worker needed to execute the Contract, as determined by the U.S. Department of Labor (Federal) and the Director of the State of California Department of Industrial Relations (State), are on file at Owner's Office and are applicable to the Project. State prevailing rates are deemed included in the Bidding Documents. Federal prevailing wages are on file at Owner's Office and included in Document 01415 (Regulatory Requirements – Funding). Upon request, Owner will make available copies to any interested party. Copies are also available at http://www.dol.gov/dol/topic/wages/index.htm for Federal and www.dir.ca.gov/labor_law.html for State. Also, Contractor shall post the applicable Federal and State prevailing wage rates at the Site.

17. **EQUAL EMPLOYMENT OPPORTUNITY.** Contractor shall comply with all applicable federal, state, and local laws, rules, and regulations in regard to nondiscrimination in employment because of race, color, ancestry, national origin, religion, sex, marital status, age, medical conditions, disability, or any other reason.

18. **WITHDRAWAL OF BIDS.** Bidders may withdraw their Bids at any time prior to the Bid opening time fixed in this Document 00200, only by written request for the withdrawal of Bid filed with Owner. Bidder or its duly authorized representative shall execute request to withdraw Bid.

19. **DETERMINATION OF APPARENT LOW BIDDER (Envelope "A").** Apparent Low Bid will be based solely on the total amount of all Bid items based on assumptions contained in Document 00400 (Bid Form). All Bidders are required to submit Bids on all Bid items.

20. **EVALUATION OF BIDDER RESPONSIBILITY (Envelope "B").**

A. Owner will open Apparent Low Bidder's Envelope "B" and check its contents for compliance with paragraph 7 of this Document 00200 and this paragraph 20. Owner will notify Apparent Low Bidder in writing of any deficiencies found and will provide Bidder the opportunity to respond in writing with reasonable clarifications but will not allow any changes in the nature of Bidder as a business entity.

B. If any Apparent Low Bidder is determined to be non-responsive or non-responsible, Owner may open the next Apparent Low Bidder's Envelope "B" pursuant to any procedures determined in Owner's reasonable discretion, and proceed for all purposes as if this Apparent Low Bidder were the original Apparent Low Bidder.

C. Bidder's compliance with the minimum qualification requirements in this paragraph 20.C will be measured by the experience of both the Bidder itself as well as the Key Personnel identified by Bidder in Document 00450 (Statement of Qualifications for Construction Work) who will have responsible charge of the various major components of the Work. If Bidder subcontracts portions of the Work, Owner, in its determination of whether the minimum qualification requirements have been met, will consider the qualifications of the Subcontractor's Key Personnel identified by Bidder in Document 00450 (Statement of Qualifications for Construction Work). The following are minimum requirements for the Bidder to be found responsible to perform the Work.
   1. Five years experience as a continuously operating entity engaged in the performance of similar work.
   2. Within the past five years completed three construction projects of a similar nature and complexity with a contract dollar amount of at least $500,000 each. For a project to be considered of similar nature and complexity for this subparagraph 2, it must include construction of an earthen reservoir with a storage capacity of at least 40 acre-feet.
   3. Sufficient financial strength, stability and resources as measured by Bidder's equity, debt-to-assets ratio, and capability to finance the Work to be performed.
   4. Ability to secure, in accordance with the Contract Documents, the required forms of Construction Performance Bond and Construction Labor and Material Payment Bond.
   5. Ability to obtain required insurance with coverage values that meet minimum requirements.
   6. Satisfactory experience on public works, including without limitation no history of default termination, excessively delayed completion, or excessive defective work.
   7. Evidence that Bidder and its team, including without limitation its HDPE geomembrane liner installer Subcontractor(s), or the Bidder to the extent Bidder performs such Work itself (hereafter "designated Subcontractor(s)"), have the human and physical resources of sufficient quantity and quality to perform the Work under Contract Documents in a timely and Specification-compliant manner, to include:
      a. Evidence demonstrating Bidder's commitment to project safety and its ability to complete projects in a safe manner.
      b. Construction and management organizations with sufficient personnel and requisite disciplines, licenses, skills, experience, and equipment for the Project.
      c. Minimum licensing requirements including evidence of a valid California class "A" contractor's license for the Bidder and evidence of requisite licenses for Key Personnel of Bidder or any designated Subcontractor.
      d. A field organization with skills, experience, and equipment sufficient to perform all on-Site Work and necessary scheduling.
      e. Expertise of Key Personnel to accomplish the duties and responsibilities required to perform the Work under Contract Documents. Minimum experience requirements of each Key Personnel include the completion of three projects of similar nature and complexity and three years of experience on projects of similar nature and complexity.
      f. Evidence that Bidder's named HDPE geomembrane liner installer Subcontractor, or the Bidder to the extent Bidder performs such Work itself, has the human and physical resources of sufficient quantity and quality to perform those aspects of the Contract in a timely and Specification-compliant manner, to include:
         1) Demonstrate a minimum of 5 years continuous experience.

2) Minimum of three construction projects of a similar nature and complexity, completed within the past 5 years.
3) Minimum of 10 million square feet of HDPE geomembrane liner installation.
4) The HDPE geomembrane liner installation supervisor shall have worked in a similar capacity on at least three projects similar in nature and complexity to this Project.

g. Evidence that the HDPE geomembrane liner manufacturer has the human and physical resources of sufficient quantity and quality to perform those aspects of the Contract in a timely and Specification-compliant manner, to include:
   1) Production of a minimum of 10 million square feet of similar HDPE geomembrane liner.

h. Evidence that the HDPE geomembrane liner master seamer has sufficient experience to perform those aspects of the Contract in a timely and Specification-compliant manner, to include:
   1) Completion of a minimum of one million square feet of HDPE geomembrane liner seaming using the type of seaming apparatus proposed for use on this Project.

21. BID EVALUATION. Owner may reject any or all Bids and waive any informalities or minor irregularities in the Bids. Owner also reserves the right, in its discretion, to reject any or all Bids and to re-Bid the Project. Owner reserves the right to reject any or all nonconforming, non-responsive, unbalanced, or conditional Bids, and to reject the Bid of any Bidder if Owner believes that it would not be in the best interest of Project to make an award to that Bidder, whether because the Bid is not responsive or the Bidder is unqualified or of doubtful financial ability or fails to meet any other pertinent standard or criteria established by Owner. For purposes of this paragraph, an "unbalanced Bid" is one having nominal prices for some Bid items and enhanced prices for other Bid items.

A. In evaluating Bids, Owner will consider Bidders' qualifications, whether or not the Bids comply with the prescribed requirements, unit prices, and other data, as may be requested in Document 00400 (Bid Form) or prior to the Notice of Award.
B. In order to evaluate Bidder's ability to perform and furnish the Work in accordance with the Contract Documents to Owner's satisfaction within the prescribed time, Owner may conduct reasonable investigations and reference checks of Bidder, proposed Subcontractors, suppliers and other persons and organizations as Owner deems necessary to assist in the evaluation of any Bid and to establish Bidder's responsibility, qualifications, financial ability, proposed Subcontractors, suppliers, and other persons and organizations. Submission of a Bid constitutes Bidder's consent to the foregoing. Owner shall have the right to consider information provided by sources other than Bidder. Owner shall also have the right to communicate directly with Bidder's surety regarding Bidder's bonds.
C. Discrepancies between the multiplication of units of Work and unit prices will be resolved in favor of the unit prices. Discrepancies between the indicated sum of any column of figures and the correct sum thereof will be resolved in favor of the correct sum. Discrepancies between written words and figures will be resolved in favor of the words.
D. Quantities stated in the Bidding Documents are approximate only and are subject to correction upon final measurement of the Work, and are subject further to the rights reserved by Owner to increase or diminish the amount of work under any classification as advantages to design or construction needs require.
E. Owner may determine whether a Bidder is qualified in its sole discretionary judgment.

22. FUNDING REQUIREMENTS.

A. When a responsive and responsible Apparent Low Bidder is determined, the following forms shall be submitted by Apparent Low Bidder within 10 Business Days of Bid Opening.
B. Forms are available from Owner and on Owner's website.
   1. Document 00451 ("Good Faith" Effort List of Subcontractors Solicited)
   2. Document 00453 ("Good Faith" Effort Bids Received List)
   3. Document 00455 (Contractor Certification)
   4. Document 00458 (DBE Subcontractor Utilization Form)
   5. Document 00459 (Summary of Bids Received from Subcontractors)
   6. Document 00462 (DBE Subcontractor Performance Form). One form per DBE Subcontractor.
C. Bidder agrees that in the selection of any and all contractors, subcontractors, and vendors for the procurement of equipment, supplies, construction, and services related to the project, at a minimum, undertake the affirmative steps as described in Section 01415 (Regulatory Requirements –Funding). Failure to take such steps prior to Bid Opening and to submit Document 00457 (Prime Contractor/Recipient Selected Disadvantaged Business Enterprises [DBE]) with the Bid shall cause the Bid to be rejected as non-responsive.
D. The apparent successful low Bidder shall submit documentation, showing that, prior to Bid opening, all required positive efforts were made. Owner must receive the documentation described in this paragraph 22 within 10 Business Days of Bid Opening.
E. Owner has conducted an outreach effort and created a DBE solicitation list. The list can be viewed on Owner's website. Bidder represents and agrees that in submitting its Bid, it is not relying on any information regarding the DBE Solicitation List supplied by Owner.

23. BID PROTEST. Document 00505 (Notice of Intent to Award for Construction) will be posted at Owner's Office and in the main lobby of the County of Sonoma Administration Building, 575 Administration Drive, Santa Rosa, California. Any Bid protest must be submitted in writing to Owner (Attention: Contract Administration/Inspection), before 3:30 p.m. of the fifth Business Day following posting of Document 00505 (Notice of Intent to Award for Construction). Owner's staff will determine official time and will call out the specified time in the Bid reception area of Owner's Office, stating that the period for accepting Bid protests is closed. Owner will use reasonable efforts to deliver an electronic copy of Document 00505 (Notice of Intent to Award for Construction) to all Bidders who submitted Bids no later than the Business Day after issuance, although any delay or failure to do so will not extend the Bid protest deadline described above.

A. The initial protest document must contain a complete statement of the basis for the protest.
B. The protest must refer to the specific portion of the document that forms the basis for the protest.
C. The protest must include the name, address, and telephone number of the person representing the protesting party.
D. The party filing the protest must concurrently transmit a copy of the initial protest document and any attached documentation to all other parties with a direct financial interest that may be adversely affected by the outcome of the protest. Such parties shall include all other Bidders who appear to have a reasonable prospect of receiving an award depending upon the outcome of the protest.
E. The procedure and time limits set forth in this paragraph are mandatory and are Bidder's sole and exclusive remedy in the event of Bid protest. Bidder's failure to comply with these procedures shall constitute a waiver of any right to further pursue the Bid protest, including

filing a Government Code Claim or legal proceedings. A Bidder may not rely on a protest submitted by another Bidder but must timely pursue its own protest.

24. **AWARD.** If the Contract is to be awarded, it will be awarded to the lowest responsible responsive Bidder. Following completion of all required Owner procedures and receipt of all Owner approvals, Owner will issue Document 00510 (Notice of Award) to successful Bidder.

25. **POST-NOTICE OF AWARD REQUIREMENTS.** After Notice of Award, the successful Bidder must execute and submit the following documents as indicated below.

A. Submit the following documents to Owner by 5:00 p.m. ten Business Days following Notice of Award. Forms are available from Owner and on Owner's website. Execution of Contract by Owner depends upon approval of these documents:
   1. Document 00463 (Certification of Nondiscrimination)
   2. Document 00465 (Certification of Non-Segregated Facilities)
   3. Document 00467 (Certification of Drug-Free Workplace)
   4. Document 00469 (Certification Regarding Debarment, Suspension, Ineligibility and Voluntary Exclusion)
   5. Document 00471 (Certification of Compliance with Federal Laws and Authorities)
   6. Document 00473 (Certification of Compliance with Labor Code Section 3700)

B. Submit the following documents to Owner by 5:00 p.m. of the 20th Day following Notice of Award. Execution of Contract by Owner depends upon approval of these documents:
   1. Document 00520 (Agreement): To be executed by successful Bidder. Submit four originals, each bearing an original signature on the signature page and initials on each page.
   2. Document 00610 (Construction Performance Bond): To be executed by successful Bidder and surety, in the amount set forth in Document 00610 (Construction Performance Bond). Submit four originals. Liquidated Damages are described in Document 00520 (Agreement).
   3. Document 00620 (Construction Labor and Material Payment Bond): To be executed by successful Bidder and surety, in the amount set forth in Document 00620 (Construction Labor and Material Payment Bond). Submit four originals.
   4. Insurance certificates and endorsements required by Article 4 of Document 00700 (General Conditions). Submit one original set.
   5. One complete set of documentary information received or generated by successful Bidder in preparation of Bid prices for its Bid, as set forth in Document 00670 (Escrow Bid Documents).
   6. The Guaranty in the form set forth in Document 00630 (Guaranty). Submit four originals, each bearing an original signature.

C. Owner shall have the right to communicate directly with Apparent Low Bidder's proposed performance bond surety, to confirm the performance bond. Owner may elect to extend the time to receive faithful performance and labor and material payment bonds.

D. Successful Bidder's failure to submit the documents required herein, in a proper and timely manner, entitles Owner to rescind its award and to cause Bidder's Bid security to be forfeited as provided herein.

26. **FAILURE TO EXECUTE AND DELIVER DOCUMENTS.** If Bidder to whom Contract is awarded, within the period described in paragraph 25 of this Document 00200, fails or neglects to execute and deliver all required Contract Documents and file all required bonds, insurance certificates, and other documents, Owner may, in its sole discretion, foreclose on Bidder's surety

bond, or deposit Bidder's cashier's check or certified check for collection, and retain the proceeds thereof as liquidated damages for Bidder's failure to enter into the Contract Documents. Bidder agrees that calculating the damages Owner may suffer as a result of Bidder's failure to execute and deliver all required Contract Documents would be extremely difficult and impractical and that the amount of Bidder's required Bid security shall be the agreed and presumed amount of Owner's damages. In addition, upon such failure, Owner may determine the next Apparent Low Bidder and proceed accordingly.

27. MODIFICATION OF COMMENCEMENT OF WORK. Owner expressly reserves the right to modify the date for the Commencement of Work under the Contract and to independently perform and complete work related to the Project. Owner accepts no responsibility to Contractor for any delays attributed to its need to complete independent work at the Site.

28. PUBLIC RECORDS ACT REQUESTS AND CONFIDENTIALITY WAIVER.

A. Per the Public Records Act, Owner will make available to the public Bidder's SOQ (if Bidder's Envelope "B" is opened), all correspondence and written questions submitted during the Bid period, all Bid submissions opened in accordance with the procedures of this Document 00200, and all subsequent Bid evaluation information. All submissions not opened will remain sealed and eventually be returned to the submitter. Except as otherwise required by law, Owner will not disclose proprietary financial information submitted that has been designated confidential by Bidder (including but not limited to audited financial statements and Part C, Financial Information in Bidder's SOQ. Any such proprietary financial information that a Bidder believes should be exempted from disclosure shall be specifically identified and marked as such. Blanket-type identification by designating whole pages or sections shall not be permitted and shall be invalid.

B. Upon a request for records regarding this Bid which specifically includes confidential information marked by Bidder in accordance with Paragraph A, above, Owner will notify Bidder within ten Days from receipt of the request. If Owner agrees that the information so marked is proprietary financial information exempt from disclosure, Owner shall refuse to disclose the information and Bidder shall take all appropriate legal action and defend Owner's refusal to produce the information in all forums. If Owner does not agree that the information so marked is exempt from disclosure, Owner will so notify Bidder of a specific time when, in response to the request, the records will be made available for inspection in accordance with the Public Records Act.

C. **By submitting a bid, Bidder shall be deemed to have waived any objections to the release of all other information and also to the release of any financial information that was not designated as confidential at the time the bid is submitted.**

29. CONFORMED PROJECT MANUAL. Following Award of Contract, Owner may prepare a conformed Project Manual reflecting Addenda issued during bidding, which will, failing objection, constitute the approved Project Manual.

30. DEFINITIONS. All abbreviations and definitions of terms used in this Document 00200 are set forth in Document 00700 (General Conditions), Section 01420 (References and Definitions), and Section 01415 (Regulatory Requirements – Funding).

END OF DOCUMENT

DOCUMENT 00202

PRE-BID SITE VISIT VICINITY MAP

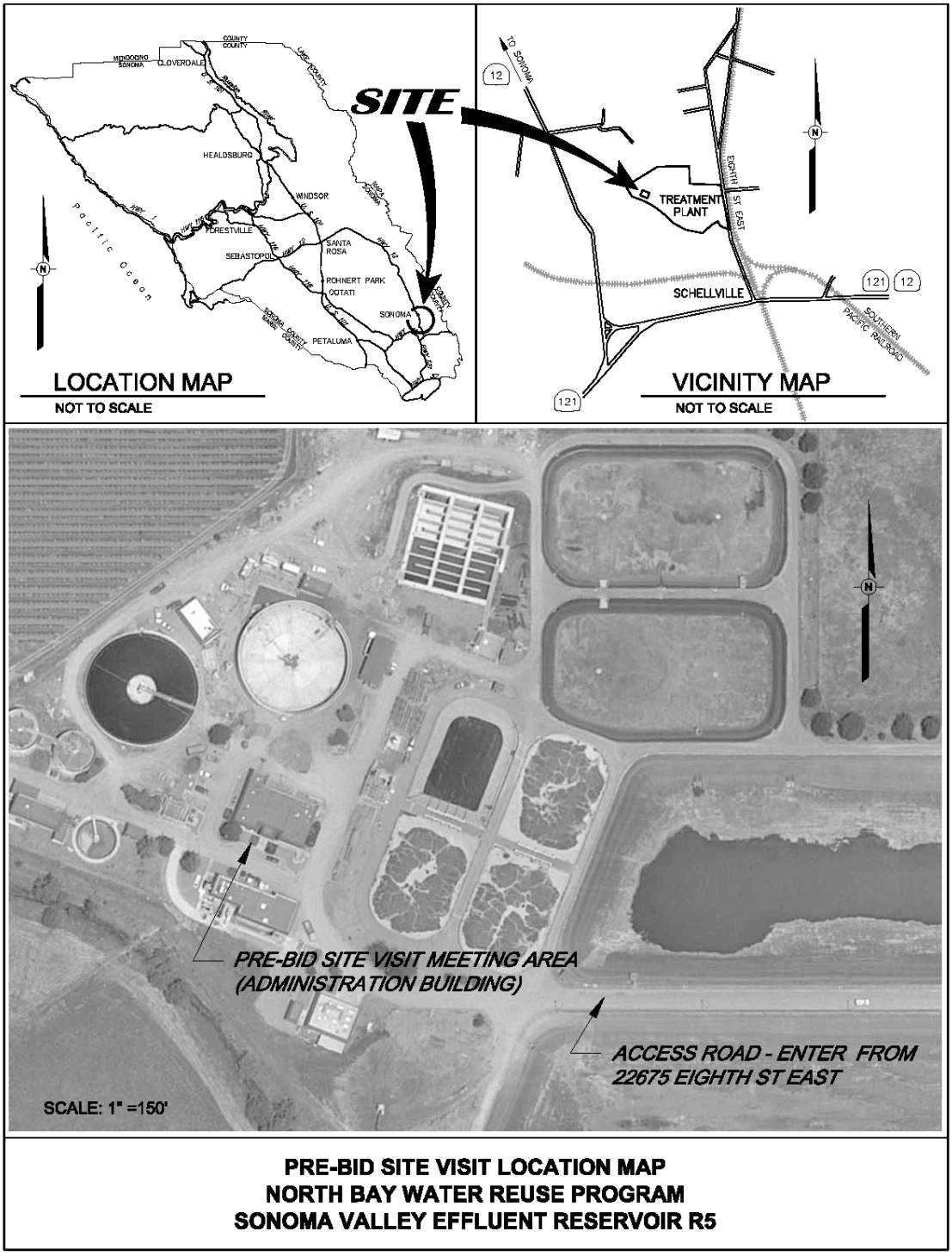

PRE-BID SITE VISIT LOCATION MAP
NORTH BAY WATER REUSE PROGRAM
SONOMA VALLEY EFFLUENT RESERVOIR R5

END OF DOCUMENT

DOCUMENT 00203

BID SUBMITTAL VICINITY MAP

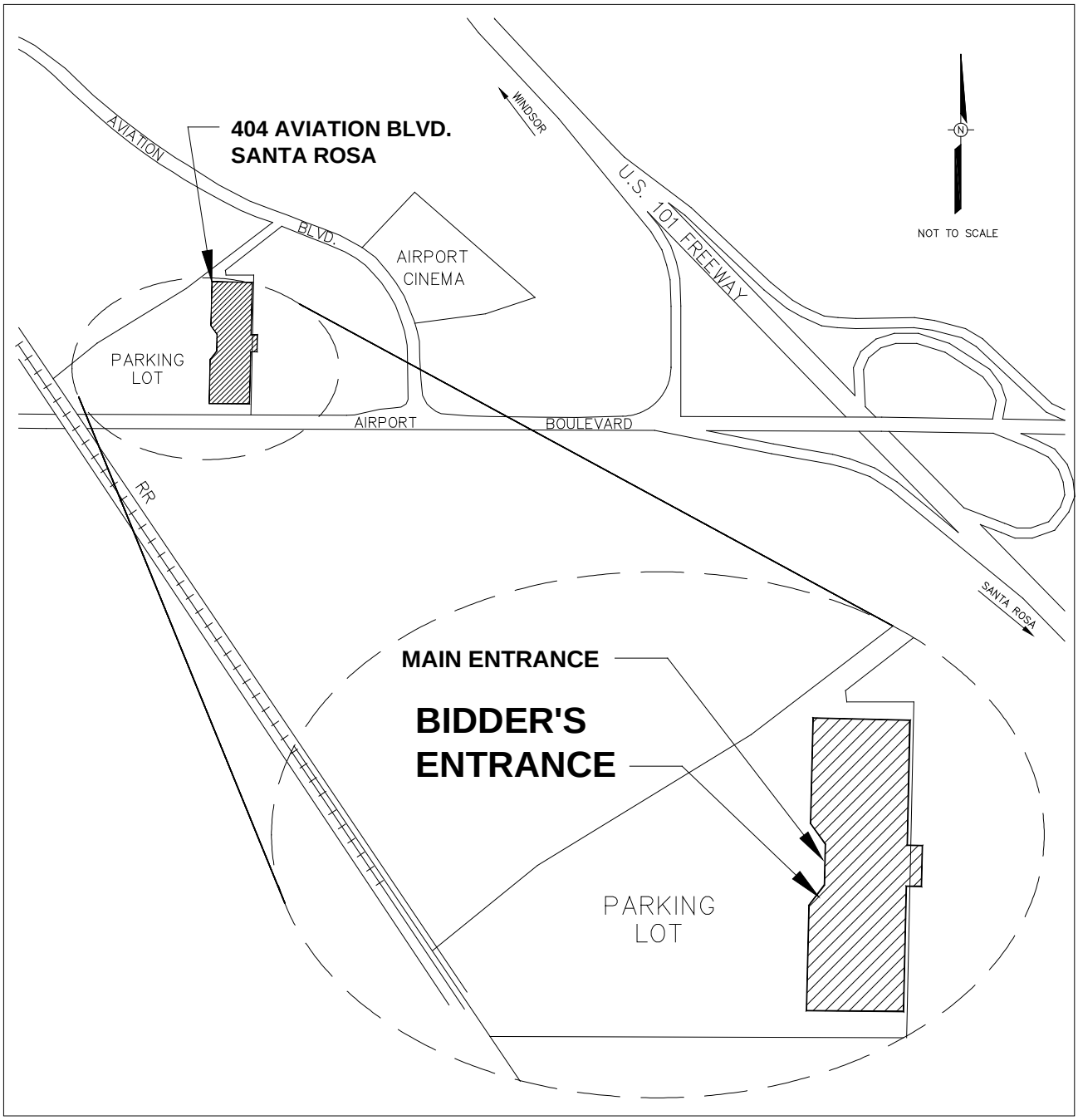

END OF DOCUMENT

DOCUMENT 00210

INDEMNITY AND RELEASE AGREEMENT

Dated _____

POTENTIAL BIDDER: _____

OWNER: Sonoma Valley County Sanitation District

SITE: _____

PROJECT: North Bay Water Reuse Program - Sonoma Valley Effluent Reservoir R5

In consideration of the above-referenced Owner's permitting the undersigned potential bidder ("Bidder") to have access to, and to conduct investigations, tests and/or inspections on, the Site, Bidder hereby agrees as follows:

1. To the greatest extent permitted by law, Bidder hereby releases, and shall defend, indemnify and hold harmless Owner, and its officers, employees, consultants, representatives, and agents, including without limitation, the Sonoma County Water Agency and its officers, employees, consultants, representatives, and agents, and all other parties having any other interest in the Site, against any claim or liability, including attorney's fees, arising from or relating to any Site-related access, investigation, test, inspection and/or other activity conducted by Bidder or any of Bidder's officers, employees, consultants, representatives, and/or agents, regardless of whether claim or liability is caused in part by the negligence of Owner or by any released and indemnified party.

2. Bidder hereby waives the provisions of California Civil Code Section 1542 which provides as follows:

   > A general release does not extend to claims which the creditor does not know or suspect to exist in his favor at the time of executing the release, which if known by him, must have materially affected his settlement with the debtor.

3. Bidder shall repair any damage to the Site or adjacent property resulting from activities authorized hereunder, and comply with and be subject to all other requirements and obligations described or referenced in Document 00320 (Geotechnical Data and Existing Conditions) and Document 00335 (Hazardous Materials Documentation).

4. Attached hereto (or to be delivered separately before Bidder's visit to the Site) is a certificate for comprehensive general liability insurance satisfying the requirements of Document 00700 (General Conditions).

5. Although this Indemnity and Release Agreement is not a Contract Document (see Document 00520 [Agreement]), it shall be fully effective and binding regardless of whether Bidder submits a Bid for the subject Project, is awarded a contract for the Project, or otherwise.

_____
Name of Bidder

By: _____
Signature

Its: _____
Title (If Corporation: Chairman, President or Vice President)

By: _____
Signature

Its: _____
Title (If Corporation: Secretary, Assistant Secretary, Chief Financial Officer or Assistant Treasurer)

END OF DOCUMENT

DOCUMENT 00320

GEOTECHNICAL DATA AND EXISTING CONDITIONS

1. SUMMARY

A. This Document 00320 sets forth the terms and conditions under which Bidder may review, study, use, or rely upon geotechnical data at or contiguous to the Site, and existing conditions information concerning existing conditions and Underground Facilities at or contiguous to the Site. This Document 00320, the available geotechnical data, and the supplied existing conditions information are not Contract Documents.

2. REPORT AND INFORMATION

A. Existence of Reports. Owner, its consultants, and prior contractors may have collected documents providing a general description of the Site and conditions of the Work. These documents may consist of geotechnical reports for and around the Site, contracts, contract specifications, tenant improvement contracts, as-built drawings, utility drawings, and information regarding Underground Facilities. These reports, documents and other information are not part of the Contract Documents.

B. Inspection of Reports. Bidders may inspect geotechnical reports, documents, and information regarding existing conditions available at the Owner's Office, and may obtain copies at cost of reproduction and handling upon Bidder's payment for the costs. These reports, documents, and other information are not part of the Contract Documents. Nevertheless, by submitting a Bid, Bidder accepts full responsibility for reviewing, knowing and understanding the contents of all of these materials.

C. Inclusion in Project Manual. Geotechnical reports may be included in the Project Manual and information regarding existing conditions may also be included in the Project Manual, but neither shall be considered part of the Contract Documents.

D. Available Documentation. The following documentation is available for review for Contract Number 70-12-7 #45 through Owner:

1. Phase I Environmental Site Assessment
   20-Acre Parcel
   22333 8th Street East, Sonoma, California
   ERM
   May 2010
2. Phase II Environmental and Geophysical Feasibility Investigation Report
   20-Acre Parcel
   22333 8th Street East, Sonoma, California
   ERM
   June 2010
3. North Bay Water Reuse Program
   Sonoma Valley Effluent Reservoir R5 Geotechnical Report
   Sonoma Valley County Sanitation District Wastewater Treatment Plant,
   22333 8th Street East, Sonoma, California
   HDR
   January 19, 2011

3. USE OF INFORMATION ON EXISTING CONDITIONS

A. Aboveground Existing Conditions. Under no circumstances shall Owner be deemed to make a warranty or representation of existing aboveground conditions, as-built conditions, or other aboveground actual conditions verifiable by reasonable independent investigation. These conditions are verifiable by Bidder by the performance of its own independent investigation that Bidder must perform prior to bidding and Bidder must not rely on the information supplied by Owner regarding existing conditions. Bidder represents and agrees that in submitting its Bid, it is not relying on any information regarding existing conditions supplied by Owner.

B. Underground Facilities. Information supplied regarding existing Underground Facilities at or contiguous to the Site is based on information furnished to Owner by others (e.g., the owners or builders of such Underground Facilities or others). Except as expressly set forth in this Document 00320, Owner does not assume responsibility for the accuracy, completeness or thoroughness of this information, and Bidder is solely responsible for any interpretation or conclusion drawn from this information. Except as expressly set forth in this Document 00320, Owner will be responsible only for the general accuracy of information regarding Underground Facilities, and only for those Underground Facilities that are owned by Owner. This express assumption of responsibility applies only if Bidder has conducted the independent investigation required of it and discrepancies were not apparent.

4. LIMITED RELIANCE PERMITTED ON CERTAIN GEOTECHNICAL INFORMATION

A. Geotechnical Data. Except as expressly set forth in this Document 00320, Owner does not warrant, and makes no representation regarding, the accuracy or thoroughness of any geotechnical data. Bidder represents and agrees that in submitting its Bid, it is not relying on any geotechnical data supplied by Owner, except as specifically set forth herein.

1. Bidder may rely upon the general accuracy of the "technical data" contained in the geotechnical reports and drawings identified above, but only insofar as it relates to subsurface conditions, provided Bidder has conducted the independent investigation required of it and discrepancies were not apparent. The term "technical data" in the referenced reports and drawings shall be limited as follows:
   a. The term "technical data" shall include actual reported depths, reported quantities, reported soil types, reported soil conditions, and reported material, equipment, or structures that were encountered during subsurface exploration.
   b. The term "technical data" does not include, and Bidder may not rely upon, any other data, interpretations, opinions or information shown or indicated in such drawings or reports that otherwise relate to subsurface conditions or described structures.
   c. The term "technical data" shall not include the location of Underground Facilities.
   d. Bidder may not rely on the completeness of reports and drawings for the purposes of bidding or construction. Bidder may rely upon the general accuracy of the "technical data" contained in such reports or drawings.
   e. Bidder is solely responsible for any interpretation or conclusion drawn from any "technical data" or any other data, interpretations, opinions, or information contained in supplied geotechnical data.

5. INVESTIGATIONS

A. Before submitting a Bid, each Bidder shall be responsible to obtain such additional or supplementary examinations, investigations, explorations, tests, studies and data

concerning conditions (surface, subsurface, and Underground Facilities) at or contiguous to the Site or otherwise, which may affect cost, progress, performance or furnishing of Work or which relate to any aspect of the means, methods, techniques, sequences or procedures of construction to be employed by Bidder and safety precautions and programs incident thereto or which Bidder deems necessary to determine its Bid for performing and furnishing the Work in accordance with the time, price and other terms and conditions of Contract Documents. Bidders shall advise Owner in writing during the Bid period of any questions, suppositions, inferences or deductions Bidders may have for Owner's review and response.

B. Owner has provided time in the period prior to bidding for Bidder to perform these investigations.

6. ACCESS TO SITE FOR INVESTIGATIONS

A. During the Pre-Bid Site Visit(s), Owner will provide each Bidder access to the Site to conduct such examinations, investigations, explorations, tests, and studies, as each Bidder deems necessary for submission of a Bid. Bidders must fill all holes and clean up and restore the Site to its former conditions upon completion of such explorations, investigations, tests, and studies. Such investigations may be performed only under the provisions of Document 00200 (Instructions to Bidders) and Document 00700 (General Conditions) including, but not limited to, proof of insurance and obligation to indemnify against claims arising from such investigation work. Each Bidder shall supply all equipment required to perform any investigations as each Bidder deems necessary. Owner has the right to limit the number of pieces of machinery operating at one time due to safety concerns.

END OF DOCUMENT

DOCUMENT 00335

HAZARDOUS MATERIALS DOCUMENTATION

1. SUMMARY

A. This Document 00335 describes hazardous material documentation included with the Contract Documents and use of data therein.

2. REPORTS AND INFORMATION

A. Owner, its consultants, contractors, and tenants have prepared documents that may provide a general description of the Site and locations of hazardous materials subject to the Work. This documentation is available for review and copying. The documentation is as follows:
   1. January 14, 2011, Memo to File from Erik Brown, Project Manager
      Subject: North Bay Water Reuse Program Sonoma Valley Effluent Reservoir R5 Project – Presence of Asbestos Cement Pipe

B. Bidders may inspect such documentation at Owner's Office, and copies may be obtained at cost of reproduction and handling upon Bidder's payment for the costs. This documentation is not part of the Contract Documents.

3. INVESTIGATIONS

A. Before submitting a Bid, each Bidder shall be responsible for obtaining such additional or supplementary examinations, investigations, explorations, tests, studies, and data concerning conditions (surface, subsurface, and Underground Facilities) at or contiguous to the Site or otherwise that may affect cost, progress, performance or furnishing of Work or which relate to any aspect of the means, methods, techniques, sequences or procedures of construction to be employed by Bidder and safety precautions and programs or projects incident thereto or which Bidder deems necessary to determine its Bid for performing and furnishing Work in accordance with the time, price, and other terms and conditions of the Contract Documents.

B. Owner has provided time in the period prior to bidding for Bidder to perform these investigations.

4. ACCESS TO SITE FOR INVESTIGATIONS

A. During the Pre-Bid Site Visit(s), Owner will provide each Bidder access to the Site to conduct such examinations, investigations, explorations, tests, and studies, as each Bidder deems necessary for submission of a Bid. Bidders must fill all holes and clean up and restore the Site to its former conditions upon completion of such explorations, investigations, tests, and studies. Such investigations may be performed only under the provisions of Document 00200 (Instructions to Bidders) and Document 00700 (General Conditions) including, but not limited to, proof of insurance and obligation to indemnify against claims arising from such investigation work. Each Bidder shall supply all equipment required to perform any investigations as each Bidder deems necessary. Owner has the right to limit the number of pieces of machinery operating at one time due to safety concerns. Any investigation performed by Bidder to verify hazardous materials/waste conditions must comply with the provisions of Document 00805 (Supplementary Conditions – Hazardous Materials), including but not limited to the requirements regarding compliance with all laws, permits, giving of all notices, and indemnification.

END OF DOCUMENT

DOCUMENT 00400

BID FORM

To be submitted as part of Envelope "A" by the time and date specified in Document 00200 (Instructions to Bidders), paragraph 1.

TO THE HONORABLE BOARD OF DIRECTORS OF THE SONOMA VALLEY COUNTY SANITATION DISTRICT

THIS BID IS SUBMITTED BY:

_____

(Firm/Company Name)

Re: CONTRACT NUMBER 70-12-7 #45, North Bay Water Reuse Program - Sonoma Valley Effluent Reservoir R5

1. The undersigned Bidder proposes and agrees, if this Bid is accepted, to enter into an agreement with the Sonoma Valley County Sanitation District, a local district of the State of California ("Owner") in the form included in the Contract Documents, Document 00520 (Agreement), to perform and furnish all Work as specified or indicated in the Contract Documents for the Contract Sum and within the Contract Time indicated in this Bid and in accordance with all other terms and conditions of the Contract Documents.

2. Bidder accepts all of the terms and conditions of the Contract Documents, Document 00100 (Advertisement for Bids), and Document 00200 (Instructions to Bidders), including, without limitation, those dealing with the disposition of Bid Security. This Bid will remain subject to acceptance for 90 Days after the day of Bid opening.

3. In submitting this Bid, Bidder represents:

   (a) Bidder has examined all of the Contract Documents and all of the Addenda (receipt of all of which is hereby acknowledged). The Addenda are listed below.

Addendum Number	**Addendum Date**	**Signature of Bidder**

   (b) Bidder has visited the Site and performed all tasks, research, investigation, reviews, examinations, and analysis and given notices, regarding the Project and the Site, as set forth in Document 00520 (Agreement), Article 5.

(c) Bidder has given Owner prompt written notice of all conflicts, errors, ambiguities, or discrepancies that it has discovered in or among the Contract Documents and as-built drawings and actual conditions and the written resolution thereof through Addenda issued by Owner is acceptable to Contractor.

4. Based on the foregoing, Bidder proposes and agrees to fully perform the Work within the time stated and in strict accordance with the Contract Documents for the following sums of money listed in the following Schedule of Bid Prices:

SCHEDULE OF BID PRICES

All Bid items, including lump sums and unit prices, must be filled in completely. Bid items are described in Section 01100 (Summary of Work). Quote in figures only, unless words are specifically requested.

ITEM	DESCRIPTION	ESTIMATED QUANTITY	UNIT	UNIT PRICE	TOTAL
1.	Bonds	XXXXXX	Lump Sum	XXXXX	$
2.	Insurance	XXXXXX	Lump Sum	XXXXX	$
3.	Safety Program and Implementation	XXXXXX	Lump Sum	XXXXX	$
4.	Construction Material Waste Management Plan and Implementation	XXXXXX	Lump Sum	XXXXX	$
5.	Installation, Operation, and Maintenance Manuals	XXXXXX	Lump Sum	XXXXX	$
6.	Storm Water Pollution Prevention Plan and Implementation	XXXXXX	Lump Sum	XXXXX	$
7.	Mobilization/ Demobilization	XXXXXX	Lump Sum	XXXXX	$
8.	Clearing and Grubbing	XXXXXX	Lump Sum	XXXXX	$
9.	Earthwork	XXXXXX	Lump Sum	XXXXX	$
10.	Overexcavation	5,000	Cubic Yard	$	$
11.	Geogrid Road	42,500	Square Foot	$	$
12.	High-Density Polyethylene Liner	386,900	Square Foot	$	$
13.	Liner Appurtenances	XXXXXX	Lump Sum	XXXXX	$

ITEM	DESCRIPTION	ESTIMATED QUANTITY	UNIT	UNIT PRICE	TOTAL
14.	Chain Link Fence and Gates	1,970	Linear Foot	$	$
15.	Drainage Improvements	XXXXXX	Lump Sum	XXXXX	$
16.	Revegetation and Landscaping	XXXXXX	Lump Sum	XXXXX	$
17.	Reservoir Inlet Structure	XXXXXX	Lump Sum	XXXXX	$
18.	Reservoir Overflow Structure	XXXXXX	Lump Sum	XXXXX	$
19.	24-Inch Reservoir Inlet Pipe	124	Linear Foot	$	$
20.	4-Inch Reservoir Inlet Pipe	370	Linear Foot	$	
21.	18-Inch Watmaugh Export Pipe	825	Linear Foot	$	
22.	24-Inch Overflow Pipe	204	Linear Foot	$	$
23.	3W System Connection for 4-Inch Reservoir Inlet Pipe	XXXXXX	Lump Sum	XXXXX	$
24.	Export Pumping Station	XXXXXX	Lump Sum	XXXXX	$
25.	Chemical Feed Provisions	XXXXXX	Lump Sum	XXXXX	$
26.	Recycled Water Pump	XXXXXX	Lump Sum	XXXXX	$
27.	Electrical	XXXXXX	Lump Sum	XXXXX	$
28.	Project Funding Sign	1	Each	$	$
29.	All Other Work	XXXXXX	Lump Sum	XXXXX	$
				TOTAL BID PRICE	$
30.	Contingency Reserve	XXXXXX	XXXXXX	XXXXX	$25,000.00
				TOTAL	$

Total: _____
(Words)

5. Subcontractors for work included in all Bid items are listed on the attached Document 00430 (Subcontractors List).

6. The undersigned Bidder understands that Owner reserves the right to reject this Bid.

7. If written notice of the acceptance of this Bid, hereinafter referred to as Notice of Award, is mailed or delivered to the undersigned Bidder within the time described in paragraph 2 of this Document 00400 or at any other time thereafter unless the Notice of Award is withdrawn, the undersigned Bidder will execute and deliver the documents required by Document 00200 (Instructions to Bidders) within the times specified therein. These documents include, but are not limited to, Document 00520 (Agreement), Document 00610 (Construction Performance Bond), and Document 00620 (Construction Labor and Material Payment Bond).

8. Notice of Award or request for additional information may be addressed to the undersigned Bidder at the address set forth below.

9. The undersigned Bidder herewith encloses cash, a cashier's check, or certified check of or on a responsible bank in the United States, or a corporate surety bond furnished by a surety authorized to do a surety business in the State of California, in form specified in Document 00200 (Instructions to Bidders), in the amount of ten percent (10%) of the Total Bid Price and made payable to "Sonoma Valley County Sanitation District."

10. The undersigned Bidder agrees to commence Work under the Contract Documents on the date established in Document 00700 (General Conditions) and to complete all work within the time specified in Document 00520 (Agreement). The undersigned Bidder acknowledges that Owner has reserved the right to delay or modify the commencement date. The undersigned Bidder further acknowledges Owner has reserved the right to perform independent work at the Site, the extent of such work may not be determined until after the opening of the Bids, and that the undersigned Bidder will be required to cooperate with such other work in accordance with the requirements of the Contract Documents.

11. The undersigned Bidder agrees that, in accordance with Document 00700 (General Conditions), liquidated damages for failure to complete all Work in the Contract within the time specified in Document 00520 (Agreement) shall be as set forth in Document 00520 (Agreement).

12. The names of all persons interested in the foregoing Bid as principals are:

(IMPORTANT NOTICE: If Bidder or other interested person is a corporation, give the legal name of corporation, state where incorporated, and names of president and secretary thereof; if a partnership, give name of the firm and names of all individual co-partners composing the firm; if Bidder or other interested person is an individual, give first and last names in full).

NAME OF BIDDER: _____
licensed in accordance with an act for the registration of Contractors, and with license number: _____ Expiration: _____.

_____ _____
Where incorporated, if applicable

_____

_____
Principals

I certify (or declare) under penalty of perjury under the laws of the State of California that the foregoing is true and correct.

_____
Signature of Bidder

_____
Date of Execution

_____
Place of Execution

NOTE: If Bidder is a corporation, set forth the legal name of the corporation together with the signature of the officer or officers authorized to sign contracts on behalf of the corporation. If Bidder is a partnership, set forth the name of the firm together with the signature of the partner or partners authorized to sign contracts on behalf of the partnership.

Business Address: _____
_____
_____

Contractor's Representative(s), (name, title): _____
_____

Officers authorized to sign contracts: _____
_____
_____

_____
Signature of Officer

_____
Title

_____
Date of Execution

_____
Place of Execution

Telephone Number(s): _____

Fax Number(s): _____

Email address(es): _____

Date of Bid: _____

END OF DOCUMENT

DOCUMENT 00411

BOND ACCOMPANYING BID

KNOW ALL BY THESE PRESENTS:

That the undersigned _____ [Name of Contractor] as Principal and the undersigned as Surety are held and firmly bound unto the SONOMA VALLEY COUNTY SANITATION DISTRICT, a local district of the State of California ("Owner"), as obligee, in the penal sum of _____ Dollars ($_____) lawful money of the United States of America being at least ten percent (10%) of the aggregate amount of said Principal _____'s base Bid, for the payment of which, well and truly to be made, we bind ourselves, our successors, executors, administrators, and assigns, jointly and severally, firmly by these presents.

WHEREAS, the said Principal is submitting a Bid for Owner Contract Number 70-12-7 #45, North Bay Water Reuse Program - Sonoma Valley Effluent Reservoir R5.

THE CONDITION OF THIS OBLIGATION IS SUCH that if the Bid submitted by the said Principal be accepted and the Contract be awarded to said Principal and said Principal shall within the required periods enter into the Contract so awarded and provide the required Construction Performance Bond, Construction Labor and Material Payment Bond, insurance certificates, and all other endorsements, forms, and documents required under Document 00200 (Instructions to Bidders), then this obligation shall be void, otherwise to remain in full force and effect.

IN WITNESS WHEREOF, the above bounden parties have executed this instrument this _____ day of _____, 20_____, in _____, California.

(Corporate Seal)

By

_____

Principal

_____

Surety

(Corporate Seal)

By

_____

Attorney in Fact

(Evidence of execution shall be provided by Notarial Acknowledgement of the same, in accordance with California Civil Code section 1189, as amended January 1, 2008.)

END OF DOCUMENT

DOCUMENT 00420

BIDDER REGISTRATION FORM

INSTRUCTIONS

In order to register to undertake work for the Sonoma Valley County Sanitation District, Bidder must provide the following:

1) Fill out this registration form completely; do not leave blanks.
2) Provide certificates of insurance or a letter evidencing coverage complying with paragraph 4.2 of Document 00700 (General Conditions).

INDEPENDENT CONTRACTOR REGISTRATION

Contractor's License # _____

Date: _____ Fed I.D. # _____

Full Corporate Name of Company: _____

Street Address: _____

_____

Mailing Address: _____

_____

Phone: _____ Fax: _____

Name of Principal Contact: _____

Type of Business: _____ Sole Proprietor _____ Partnership
_____ Non-Profit 501 C3 _____ Corporation
_____ other (please explain:_____)

INSURANCE

Workers' Compensation:

Carrier: _____

Address: _____

Phone and Fax: _____

Policy Number: _____

General Liability:

Carrier: _____

Address: _____

Phone and Fax: _____

Policy Number: _____

Policy Limits: $ _____

A.M. Best Rating: _____

Automobile Liability:

Carrier: _____

Address: _____

Phone and Fax: _____

Policy Number: _____

Policy Limits: $ _____

A.M. Best Rating: _____

All-risk Course of Construction (if applicable, as required by Document 00800 [Supplementary Conditions]):

Carrier: _____

Address: _____

Phone and Fax: _____

Policy Number: _____

Policy Limits: $ _____

A.M. Best Rating: _____

Professional Liability (if applicable, as required by Document 00800 [Supplementary Conditions]):

Carrier: _____

Address: _____

Phone and Fax: _____

Policy Number: _____

Policy Limits: $ _____

A.M. Best Rating: _____

Environmental Impairment Liability (if applicable, as required by Document 00800 [Supplementary Conditions]):

Carrier: _____

Address: _____

Phone and Fax: _____

Policy Number: _____

Policy Limits: $ _____

A.M. Best Rating: _____

BIDDER CERTIFIES, UNDER PENALTY OF PERJURY, THAT THE FOREGOING INFORMATION IS CURRENT AND ACCURATE AND AUTHORIZES THE SONOMA VALLEY COUNTY SANITATION DISTRICT, AND ITS AGENTS AND REPRESENTATIVES TO OBTAIN A CREDIT REPORT AND/OR VERIFY ANY OF THE ABOVE INFORMATION.

_____
Signature

_____
Date

END OF DOCUMENT

DOCUMENT 00430

SUBCONTRACTORS LIST

Bidder submits the following information as to the subcontractors Bidder intends to employ if awarded the Contract.

Full Name of Subcontractor and Address of Mill or Shop	Description of Work: Reference To Bid Items	Subcontractor's License No.

(Bidder to attach additional sheets if necessary)

END OF DOCUMENT

DOCUMENT 00450

STATEMENT OF QUALIFICATIONS FOR CONSTRUCTION WORK

STATEMENT OF QUALIFICATIONS CHECKLIST

This checklist is for Bidder's convenience and lists some of the completed documents Bidder should ensure are submitted with Bidder's Statement of Qualifications.

- ☐ Letter of Assurance Regarding Performance and Payment Bonds (Document 00450, Attachment "A"). Modification of this form may result in rejection of the bid as non-responsive.
- ☐ Authorization to Contact Surety Form (Document 00450, Attachment "B")
- ☐ Statement of Qualifications Questionnaire (Document 00450, Attachment "C")
- ☐ Reviewed or audited financial statements for three years
- ☐ Technical Resources identification and description
- ☐ Résumés of Key Personnel
- ☐ Litigation History
- ☐ Cal/OSHA 300A log for 2010

(This page intentionally left blank)

1. REQUIRED CONTENTS OF SOQ SUBMISSION

A. Financial Capacity. Include audited or reviewed financial statements for the three most recently completed fiscal years for Bidder and each member of any proposed consortium or joint venture. Also include audited or reviewed financial statements for the three most recently completed fiscal years for any parent company(ies) of Bidder and each member of any proposed consortium or joint venture.

B. Capability to Provide Required Performance and Payment Bonds.
   1. Include a completed "Letter of Assurance Regarding Performance and Payment Bonds" from Bidder's Surety in the form attached to this Document 00450 as Attachment "A";
   2. Include a completed "Authorization to Contact Surety" from Bidder in the form attached to this Document 00450 as Attachment "B."

C. Human and Physical Resources. Identify, describe, and quantify for Bidder and separately for Bidder's "designated Subcontractor(s)" (as defined in Document 00200 Instructions to Bidders), the following technical resources for the Work:
   1. For products or materials listed in the "Major Products List" (see Section 01330 [Submittal Procedures]), provide description and location of manufacturing facilities, naming products and quantifying production capacity and current demand;
   2. Description of field organization(s), naming skills and equipment;
   3. Description of safety program, quality control procedures, and safety experience; and
   4. Evidence of a valid California contractor's license and required licenses of all persons who are Key Personnel of the Bidder or any designated Subcontractor.

D. Completed Questionnaire. Include a completed "Statement of Qualification Questionnaire" in the form attached to this Document 00450 as Attachment "C." Add supplementary information if necessary.

E. Resumes of Proposed Key Personnel. Include a resume for each named Key Personnel of Bidder, and Bidder's (including but not limited to the superintendent) designated Subcontractor(s), to include the following:
   1. Name and proposed assignment of Key Personnel - do not include home addresses or phone numbers;
   2. Years of experience;
   3. Education - degrees, schools, and years obtained;
   4. Professional registration(s);
   5. Fluency in English (Yes/No);
   6. Experience directly related to above proposed assignment;
   7. At least three client references, including contact names, addresses, and telephone numbers; and
   8. Description of experience requirements as required by Document 00200 (Instructions to Bidders).

F. Litigation History. Include a description of litigation history for the past five years, including names of involved parties, nature of dispute, and disposition.

2. GENERAL CONDITIONS

A. General Conditions for Content. The SOQ shall be clear and concise to enable management-oriented personnel to make a thorough evaluation and arrive at a sound determination as to whether the SOQ meets Owner's requirements. To this end, the SOQ should be so specific, detailed, and complete as to demonstrate clearly and fully that the Bidder has a thorough

understanding of and has demonstrated knowledge of the requirements to perform the Work (or applicable portion thereof).

B. Explanations to SOQ. Any explanation requested by a Bidder regarding the meaning or interpretation of this Document 00450 must be requested in writing in accordance with Document 00200 (Instructions to Bidders). Oral explanations or instructions will not be binding. Any information provided to any prospective Bidder concerning this Document 00450 will be furnished to all prospective Bidders as an Addendum to the Bidding Documents.

3. DEFINITIONS

A. Except as set forth herein, all abbreviations and definitions of terms used in this Document 00450 are as set forth in Document 00700 (General Conditions) or Section 01420 (References and Definitions).

LETTER OF ASSURANCE REGARDING PERFORMANCE AND PAYMENT BONDS, AUTHORIZATION TO CONTACT SURETY FORM, AND STATEMENT OF QUALIFICATION QUESTIONNAIRE FOLLOWS ON NEXT PAGE

ATTACHMENT "A" -- Letter of Assurance Regarding Performance and Payment Bonds

To Sonoma Valley County Sanitation District:

This letter is written by _____ [insert name of surety], a surety duly licensed to do business in the State of California, having a financial rating from A. M. Best Company of A or better. The purpose of this letter is to advise the Sonoma Valley County Sanitation District that this surety has agreed to provide _____ [insert name of Bidder] with the required performance and payment bonds in accordance with the requirements set forth in Documents 00610 (Construction Performance Bond) and 00620 (Construction Labor and Material Payment Bond) for the North Bay Water Reuse Program - Sonoma Valley Effluent Reservoir R5, if the Bid submitted by said Bidder is accepted and the Contract is awarded to said Bidder. These performance and payment bonds shall be in the minimum penal sums provided therein.

_____
Signature of Surety's Authorized Representative

_____
Name and Title

_____
Date

ATTACHMENT "B" -- Authorization to Contact Surety

The Sonoma Valley County Sanitation District is hereby authorized to verify with the Surety identified in Attachment "A" that the Surety will, based upon Bid prices, issue the required bonds under the conditions stated in Attachment "A."

_____
Signature of Bidder's Authorized Representative

_____
Name and Title

_____
Date

ATTACHMENT "C" -- Statement of Qualification Questionnaire

Bidders shall complete the entire Statement of Qualification Questionnaire and submit it in accordance with Document 00200 (Instructions to Bidders) and this Document 00450. Failure to complete the questionnaire or inclusion of any false statement(s) shall be grounds for immediate disqualification. Label attachments with a reference to the related document, part, and question number.

CONTACT INFORMATION

Company Name: _____

Owner of Company: _____

Contact Person: _____

Address: _____

Phone: _____ Fax: _____

PART A: GENERAL INFORMATION

Complete Part A before proceeding to Part B.

1. Does Bidder possess a valid and current California Contractor's license for the Work proposed? Yes _____ No _____
2. Does Bidder have a minimum of $1,000,000 general liability insurance coverage? Yes _____ No _____
3. Has Bidder's license been suspended or revoked at any time in the last five years? Yes _____ No _____
4. Has Bidder been "default terminated" by an owner (other than for convenience), or has a Surety completed a contract for Bidder within the last five years? Yes _____ No _____
5. Labor Commissioner assessments or determination of ineligibility to bid:
   a. Has Bidder had a final civil wage and penalty assessment against it from the Labor Commissioner more than twice in the last five years? Yes _____ No _____
   b. Has Bidder been determined by the Labor Commissioner to be ineligible to bid on public contracts more than twice in the last five years? Yes _____ No _____

Bidder will be immediately disqualified if any answer to questions 1 or 2 above is No.
Bidder will be immediately disqualified if any answer to questions 3, 4, 5.a, or 5.b above is Yes.

PART B: SAFETY, PREVAILING WAGE, DISPUTES, AND BONDS

(SAFETY)

1. Cal/OSHA Citations and Penalties: Yes_____ No_____
   If yes, please submit the following information to determine if Bidder meets the suggested safety criteria for this Project. Describe any Cal/OSHA citations and penalties that Bidder has received in the last three years. For each occurrence state whether the action by Cal/OSHA resulted in a citation, or a penalty, or both. Describe the activities that led to the action by Cal/OSHA. Provide dates, citation numbers, penalty amounts, and any other relevant information regarding the action by Cal/OSHA. Responses shall be machine written or neatly printed on company letterhead and signed by an officer of the company.

   ☐ Separate sheet attached.

2. Experience Modification Rates:
   What were Bidder's Interstate Experience Modification Rates as established by the Workers' Compensation Insurance Rating Bureau for the following three years?

   2008: _____
   2009: _____
   2010: _____

   Average of last three years: _____ (no rounding)

   If Bidder was not eligible to obtain a formal rating from the Workers' Compensation Insurance Rating Bureau for any of the years listed above, Bidder must submit written documentation from its workers' compensation insurance company that establishes what Bidder's equivalent experience modification rate would be.

   If average of last three years is greater than 1.1, Bidder must provide an explanation here or as a separate attachment:

   _____

   _____

   _____

3. Total Recordable Incident Rates (RIR):
   What were Bidder's Total Recordable Incident Rates (RIR) for each of the last three complete years?

   2008: _____
   2009: _____
   2010: _____

   Average of last three years: _____ (no rounding)

4. Total Lost Time Incident Rates (LTIR):
What were Bidder's Total Lost Time Incident Rates (LTIR) for each of the last three complete years?

2008: _____
2009: _____
2010: _____

Average of last three years: _____ (no rounding)

5. State the name of Bidder's safety engineer/manager or Site Safety Officer: _____
Attach a resume or outline of this individual's safety and health qualifications and experience.

(PREVAILING WAGE PROVISIONS)

6. In the past five years, has Bidder been fined, penalized or otherwise found to have violated any prevailing wage or labor code provision? If yes, attach description of each occurrence.
Yes_____ No_____

(LICENSE PROVISIONS)

7. In the past five years, has Bidder changed names or license numbers? If so, please state reason for change and list previous name(s) and any previous license number for any of Bidder's principals.

Yes_____ No_____ Reason: _____

_____

Previous name(s) and license number(s): _____

_____

(DISPUTES)

8. In the past five years, has Bidder had any claims, litigation, or disputes resulting in mediation or arbitration, or termination for cause associated with any project? Yes _____ No _____
If yes, attach description of each such instance including details of total claim amount, settlement amount, and owner's name and phone number.

(BONDING)

9. Bonding Capacity - Provide documentation from Bidder's surety identifying the following:
Name of bonding company/surety: _____

Name of Surety Agent: _____

Surety Agent address: _____

Surety Agent phone number: _____

Is surety a California-admitted surety? Yes _____ No _____

Is surety listed in the current edition of the California Department of the Treasury's Listing of approved sureties? Yes _____ No _____

List surety's A.M. Best Rating: _____

What is Bidder's total bonding capacity? _____

What percentage rate does Bidder pay for bonds? _____

PART C: FINANCIAL INFORMATION

1. Has Bidder ever reorganized under the protection of the bankruptcy laws?
   Yes____ No _____ If yes, please state when _____

2. If Bidder has had the general liability carrier identified in Document 00420 (Bidder Registration Form) for less than five years, please provide additional information below for balance of the past five years.
   Agency Name: _____

   Contact Name: _____

   Phone Number: _____

   Carrier: _____ Dates: _____ A.M. Best Rating: _____

   Carrier: _____ Dates: _____ A.M. Best Rating: _____

   Carrier: _____ Dates: _____ A.M. Best Rating: _____

3. Has Bidder ever had insurance terminated by a carrier? Yes _____ No _____
   If yes, explain on separate signed sheet marked with correlating cross-reference to this paragraph of the questionnaire.

PART D: EXPERIENCE OF PRIME CONTRACTOR

The unique nature of this Project requires prior similar experience of the firm and the Key Personnel assigned. Summarize similar project experience below and provide the detailed project information requested:

Prime Contractor. List three construction projects of a similar nature and complexity, completed within the past five years, with a contract dollar amount of at least $500,000 each, including construction of an earthen reservoir with a storage capacity of at least 40 acre-feet, and indicate who was the superintendent and Client's contact for each project.

Project Name	Construction Cost ($)	Size of Reservoir (Acre-Feet)	Year Completed	Name of Project Superintendent	Client's Contact Name and Phone Number

Project Name	Construction Cost ($)	Size of Reservoir (Acre-Feet)	Year Completed	Name of Project Superintendent	Client's Contact Name and Phone Number

Provide information about the three qualifying projects listed above. Names and references must be current and verifiable. If a separate sheet is used, it must contain all of the following information:

1. Project Name: _____
   Location: _____
   Owner: _____
   Owner Contact (name and phone number): _____
   Architect/Engineer: _____
   Architect/Engineer Contact (name and phone number): _____
   Const. Mgr. or Project Mgr. (name and phone number): _____
   Description of Project, Scope of Work Performed: _____
   _____
   Total Construction Cost: _____
   Total Change Order Amount: _____
   Original Scheduled Date of Completion: _____
   Time Extensions Granted (number of Days): _____
   Actual Date of Completion: _____
   Number of Stop Notices filed by subcontractors or suppliers: _____
2. Project Name: _____
   Location: _____
   Owner: _____
   Owner Contact (name and phone number): _____
   Architect/Engineer: _____
   Architect/Engineer Contact (name and phone number): _____
   Const. Mgr. or Project Mgr. (name and phone number): _____
   Description of Project, Scope of Work Performed: _____
   _____
   Total Construction Cost: _____
   Total Change Order Amount: _____
   Original Scheduled Date of Completion: _____

Time Extensions Granted (number of Days):_____

Actual Date of Completion:_____

Number of Stop Notices filed by subcontractors or suppliers:_____

3. Project Name: _____

Location:_____

Owner:_____

Owner Contact (name and phone number):_____

Architect/Engineer:_____

Architect/Engineer Contact (name and phone number):_____

Const. Mgr. or Project Mgr. (name and phone number):_____

Description of Project, Scope of Work Performed:_____

_____

Total Construction Cost:_____

Total Change Order Amount:_____

Original Scheduled Date of Completion:_____

Time Extensions Granted (number of Days):_____

Actual Date of Completion:_____

Number of Stop Notices filed by subcontractors or suppliers:_____

List years of experience as a continuously operating entity engaged in the performance of similar work (Five years required, minimum): _____

List Key Personnel who will be assigned to the Work:

Project Manager: _____

Project Superintendent: _____

Project Scheduler: _____

PART E: EXPERIENCE OF DESIGNATED SUBCONTRACTOR(S)

The unique nature of this Project requires prior similar project experience of the designated Subcontractor(s), including the Bidder to the extent Bidder performs such Work itself, and the Key Personnel assigned. Summarize similar project experience below and provide the detailed project information requested:

HDPE Geomembrane Liner Installer Subcontractor. List three construction projects of a similar nature and complexity, completed within the past five years. Indicate total square feet of HDPE geomembrane liner installed, and who was the superintendent and Client's contact for each project.

Project Name	Construction Cost ($)	SQ FT Installed	Year Completed	Name of Project Superintendent	Client's Contact Name and Phone Number

List projects completed that total, in combination with the above-listed projects, installation of at least 10 million square feet of HDPE geomembrane liner.
In addition, the HDPE geomembrane liner installation supervisor shall have worked in a similar capacity on at least three projects similar in nature and complexity to this Project. Indicate total square feet installed, and who was the superintendent and Client's contact for each project.

Project Name	Construction Cost ($)	SQ FT Installed	Year Completed	Name of Project Superintendent	Client's Contact Name and Phone Number

Experience of HDPE Geomembrane Liner Master Seamer.
The HDPE geomembrane liner master seamer shall have completed a minimum of one million square feet of HDPE geomembrane liner seaming using the type of seaming apparatus proposed for use on this Project. Indicate total square feet seamed, and who was the superintendent and Client's contact for each project. If a separate sheet is used, it must contain all of the following information:

Project Name	Construction Cost ($)	SQ FT Seamed	Year Completed	Name of Project Superintendent	Client's Contact Name and Phone Number

Project Name	Construction Cost ($)	SQ FT Seamed	Year Completed	Name of Project Superintendent	Client's Contact Name and Phone Number

List Key Personnel that will be assigned to the Work:

Project Manager: _____

Project Superintendent: _____

HDPE Geomembrane Liner Installation Supervisor: _____

Provide information about the three qualifying projects listed above. Names and references must be current and verifiable. If a separate sheet is used, it must contain all of the following information:

1. Project Name: _____
   Location: _____
   Owner: _____
   Owner Contact (name and phone number): _____
   Architect/Engineer: _____
   Architect/Engineer Contact (name and phone number): _____
   Const. Mgr. or Project Mgr. (name and phone number): _____
   Description of Project, Scope of Work Performed: _____
   _____
   Value of Construction Contract: _____
   Value of Change Orders: _____
   Original Scheduled Date of Completion: _____
   Time Extensions Granted (number of Days): _____
   Actual Date of Completion: _____
   Number of Stop Notices filed by subcontractors or suppliers: _____
2. Project Name: _____
   Location: _____
   Owner: _____
   Owner Contact (name and phone number): _____
   Architect/Engineer: _____
   Architect/Engineer Contact (name and phone number): _____
   Const. Mgr. or Project Mgr. (name and phone number): _____

Description of Project, Scope of Work Performed:_____

_____

Value of Construction Contract:_____

Value of Change Orders:_____

Original Scheduled Date of Completion:_____

Time Extensions Granted (number of Days):_____

Actual Date of Completion:_____

Number of Stop Notices filed by subcontractors or suppliers:_____

3. Project Name: _____

Location:_____

Owner:_____

Owner Contact (name and phone number):_____

Architect/Engineer:_____

Architect/Engineer Contact (name and phone number):_____

Const. Mgr. or Project Mgr. (name and phone number):_____

Description of Project, Scope of Work Performed:_____

_____

Value of Construction Contract:_____

Value of Change Orders:_____

Original Scheduled Date of Completion:_____

Time Extensions Granted (number of Days):_____

Actual Date of Completion:_____

Number of Stop Notices filed by subcontractors or suppliers:_____

List years of experience as a continuously operating entity engaged in the performance of similar work (Five years required, minimum): _____

PART F: ADDITIONAL EXPERIENCE REQUIREMENTS

Experience of Manufacturer(s).

The HDPE geomembrane liner manufacturer shall have the human and physical resources of sufficient quantity and quality to perform those aspects of the Contract in a timely and Specification-compliant manner. Attach a letter to this Section 00450 from the HDPE geomembrane liner manufacturer stating that the HDPE geomembrane liner manufacturer has produced a minimum of 10 million square feet of similar HDPE geomembrane liner material.

BIDDER CERTIFIES, UNDER PENALTY OF PERJURY, THAT THE FOREGOING INFORMATION IS CURRENT AND ACCURATE AND AUTHORIZES THE SONOMA VALLEY COUNTY SANITATION DISTRICT, AND ITS AGENTS AND REPRESENTATIVES TO OBTAIN A CREDIT REPORT AND/OR VERIFY ANY OF THE ABOVE INFORMATION.

_____
SIGNATURE

_____
TITLE

END OF DOCUMENT

DOCUMENT 00457

PRIME CONTRACTOR/RECIPIENT SELECTED DISADVANTAGED BUSINESS ENTERPRISES (DBE)

CONTRACT RECIPIENTS NAME	CONTRACT NO. OR SPECIFICATION NO.
PROJECT DESCRIPTION	PROJECT LOCATION
PRIME CONTRACTOR INFORMATION	
NAME AND ADDRESS (Include ZIP Code, Federal Employer Tax ID #)	☐ DBE
PHONE	AMOUNT OF CONTRACT$
DBE INFORMATION	
☐ NONE*	
☐ DBE	NAME AND ADDRESS (Include ZIP Code,)
☐ SUBCONTRACTOR ☐ JOINT VENTURE	☐ SUPPLIER/SERVICE ☐ BROKER
AMOUNT OF CONTRACT $	PHONE
WORK TO BE PERFORMED	
☐ DBE	NAME AND ADDRESS (Include ZIP Code,)
☐ SUBCONTRACTOR ☐ JOINT VENTURE	☐ SUPPLIER/SERVICE ☐ BROKER
AMOUNT OF CONTRACT $	PHONE
WORK TO BE PERFORMED	
☐ DBE	NAME AND ADDRESS (Include ZIP Code,)
☐ SUBCONTRACTOR ☐ JOINT VENTURE	☐ SUPPLIER/SERVICE ☐ BROKER
AMOUNT OF CONTRACT $	PHONE
WORK TO BE PERFORMED	
☐ DBE	NAME AND ADDRESS (Include ZIP Code,)
☐ SUBCONTRACTOR ☐ JOINT VENTURE	☐ SUPPLIER/SERVICE ☐ BROKER
AMOUNT OF CONTRACT $	PHONE
WORK TO BE PERFORMED	
TOTAL DBE AMOUNT: $_____	
SIGNATURE OF PERSON COMPLETING FORM: _____	
TITLE: _____ PHONE:_____ DATE: _____	

*Negative reports are required. ORIGINAL SIGNATURE AND DATE REQUIRED. **Failure to complete and submit this form with the bid will cause the bid to be rejected as non-responsive.**

END OF DOCUMENT

DOCUMENT 00481

NON-COLLUSION AFFIDAVIT
PUBLIC CONTRACT CODE §7106

NON-COLLUSION AFFIDAVIT TO BE EXECUTED BY BIDDER AND SUBMITTED WITH BID

STATE OF CALIFORNIA)
) ss.
COUNTY OF _____)

_____ [Name(s) of Principal(s) of Bidder], being first duly sworn, deposes and says that he/she/they is/are _____ [Office(s) of Affiant(s)] of _____ [Name of Bidder], the party making the foregoing Bid, that the Bid is not made in the interest of, or on behalf of, any undisclosed person, partnership, company, association, organization, or corporation; that the Bid is genuine and not collusive or sham; that Bidder has not directly or indirectly induced or solicited any other bidder to put in a false or sham Bid, and has not directly or indirectly colluded, conspired, connived or agreed with any bidder or anyone else to put in a sham Bid, or that anyone shall refrain from bidding, and that the Bidder has not in any manner, directly or indirectly, sought by agreement, communication or conference with anyone to fix the Bid price of Bidder or any other bidder, or to fix any overhead, profit or cost element of the Bid price, or of that of any other bidder, or to secure any advantage against the Sonoma Valley County Sanitation District, a local district of the State of California, or anyone interested in the proposed contract; that all statements contained in the Bid are true; and further, that Bidder has not, directly or indirectly, submitted its Bid price or any breakdown thereof, or the contents thereof, or divulged information or data relative thereto, or paid, and will not pay, any fee to any corporation, partnership, company association, organization, Bid depository, or to any member or agent thereof to effectuate a collusive or sham Bid.

Executed under penalty of perjury under the laws of the State of California:

If Bidder is a partnership, joint venture, or corporation, at least two signatures are required. See reverse side for signature requirements.

_____ _____
(Name of Bidder) (Signature)

_____
(Second Signature if corporation/joint venture/ or partnership)

State of California

County of _____

Subscribed and sworn to (or affirmed) before me on this _____ day of _____, 20____, by _____, proved to me on the basis of satisfactory evidence to be the person(s) who appeared before me.

Notary Public Signature_____ (Seal)

(If Bidder is a partnership or a joint venture, this affidavit must be signed and sworn to by every member of the partnership or venture.)

(If Bidder [including any partner or venturer of a partnership or joint venture] is a corporation, this affidavit must be signed by the Chairman, President, or Vice President and by the Secretary, Assistant Secretary, Chief Financial Officer, or Assistant Treasurer.)

(If Bidder's affidavit on this form is made outside the State of California, the official position of the person taking such affidavit shall be certified according to law.)

END OF DOCUMENT

CONTRACTING REQUIREMENTS

DOCUMENT 00505

NOTICE OF INTENT TO AWARD FOR CONSTRUCTION

DATE POSTED: _____

CONTRACT NUMBER: 70-12-7 #45

PROJECT TITLE: North Bay Water Reuse Program - Sonoma Valley Effluent Reservoir R5

Grant Davis, the General Manager of the Sonoma County Water Agency, intends to recommend to the Board of Directors of the Sonoma Valley County Sanitation District the award of the above-referenced Project to _____.
(Name of Contractor)

Grant Davis
General Manager

By: _____

_____
(Print name)

Title: _____

Date: _____

END OF DOCUMENT

DOCUMENT 00510

NOTICE OF AWARD

Dated _____

TO: _____

ADDRESS: _____

CONTRACT NO.: 70-12-7 #45

CONTRACT FOR:

North Bay Water Reuse Program -

Sonoma Valley Effluent Reservoir R5

The Contract Sum of your contract is _____ _____ Dollars ($_____).

1. Several copies of the proposed Contract Documents listed below accompany this Notice of Award.

2. Submit the following documents to Owner by 5:00 p.m. of the 10 Business Days following Notice of Award. Forms are available from Owner and on Owner's website. Execution of Contract by Owner depends upon approval of these documents:
   a. Document 00462 (Disadvantaged Business Enterprise Program DBE Subcontractor Performance Form)
   b. Document 00464 (Disadvantaged Business Enterprise Program DBE Subcontractor Participation Form)
   c. Document 00463 (Certification of Nondiscrimination).
   d. Document 00465 (Certification of Non-Segregated Facilities).
   e. Document 00467 (Certification of Drug-Free Workplace).
   f. Document 00469 (Certification Regarding Debarment, Suspension, Ineligibility and Voluntary Exclusion).
   g. Document 00471 (Certification of Compliance with Federal Laws and Authorities).
   h. Document 00473 (Certification of Compliance with Labor Code Section 3700).

3. You must comply with the following conditions precedent by 5:00 p.m. of the 20th Day following the date of this Notice of Award, that is, by _____, _____ [month day, year].

   a. Deliver to Owner four fully executed counterparts of Document 00520 (Agreement). Each copy of Document 00520 (Agreement) must bear your original signature on the signature page and your initials on each page.

b. Deliver to Owner four originals of Document 00610 (Construction Performance Bond), executed by you and your surety.
c. Deliver to Owner four originals of Document 00620 (Construction Labor and Material Payment Bond), executed by you and your surety.
d. Deliver to Owner original set of the insurance certificates with endorsements required under Document 00700 (General Conditions).
e. Deliver to Owner four original copies of Document 00630 (Guaranty), each executed by you.
f. Deliver to Owner one complete set of the documentary evidence received or generated by you in preparation of Bid prices for this Contract, as set forth in Document 00670 (Escrow Bid Documents).

4. Failure to comply with these conditions within the time specified will entitle Owner to consider your Bid abandoned, to annul this Notice of Award, and to declare your Bid security forfeited.

5. Within 21 Days after you comply with the conditions in paragraph 3 of this Document 00510, Owner will return to you one fully signed counterpart of Document 00520 (Agreement) with ten copies of the Project Manual (including Specifications and Drawings) and five sets of full-size Drawings.

6. Attend a Post-Notice of Award Meeting at Owner's office. This meeting will be scheduled for approximately one week after this Notice of Award is issued.

7. Upon commencement of Work, you and each of your Subcontractors shall certify and provide to Owner copies of payroll records on forms provided by the Division of Labor Standards Enforcement, in accordance with Section 1776 of the California Labor Code.

SONOMA VALLEY COUNTY SANITATION DISTRICT
A Local District of the State of California ("Owner")

BY: _____
Grant Davis, General Manager

END OF DOCUMENT

DOCUMENT 00520

AGREEMENT

P/T#: 7487

THIS AGREEMENT, dated this ___ day of _____, 20__ , by and between _____ [Name of Contractor] whose place of business is located at _____ [Address of Contractor] ("Contractor"), and the SONOMA VALLEY COUNTY SANITATION DISTRICT ("Owner"), a local district of the State of California acting under and by virtue of the authority vested in the Owner by the laws of the State of California.

Owner is currently pursuing ISO 9001 and ISO 14001 certification. ISO provides a program for documentation and consistent implementation of an organization's processes in order to ensure repeatability, accuracy, and predictability while achieving optimal customer satisfaction. ISO 9001 refers to Quality Management Systems (QMS) and ISO 14001 refers to Environmental Management Systems (EMS). The QMS focuses on business performance and achieving success, while the EMS focuses on reducing Owner's environmental impact. Owner has integrated the two management systems into one system referred to as Owner's EMS/QMS. Contract Documents contain information and requirements related to ISO.

WHEREAS, Owner, by its Board Resolution No._____ adopted on the _____ day of _____ awarded to Contractor the following Contract:

CONTRACT NUMBER 70-12-7 #45
North Bay Water Reuse Program -
Sonoma Valley Effluent Reservoir R5

NOW, THEREFORE, in consideration of the mutual covenants hereinafter set forth, Contractor and Owner agree as follows:

Article 1. Work

1.1 Contractor shall complete all Work specified in the Contract Documents, in accordance with the Specifications, Drawings, and all other terms and conditions of the Contract Documents.

Article 2. Agency and Notices to Owner

2.1 The Sonoma County Water Agency, a public agency of the State of California ("Agency"), has been designated the Owner's agent for all purposes of the Contract Documents. All Contractor agreements and other obligations (including without limitation releases, representations, covenants, indemnities and obligations to provide insurance) arising from or relating to the Contract Documents in favor of the Owner shall also be in favor of the Agency, and Agency will be an express third-party beneficiary of all Contractor agreements and other obligations. All Owner rights under the Contract Documents may be exercised by Agency, either in its own name or the Owner's name. Contractor hereby expressly consents to the foregoing.

2.2 Owner has designated Cordel Stillman, Deputy Chief Engineer, Construction Management Section Manager, to act as Owner's Representative(s), who will represent Owner in performing Owner's duties and responsibilities and exercising Owner's rights and authorities in Contract Documents. Owner may change the individual(s) acting as Owner's Representative(s), or delegate one or more specific functions to one or more specific Owner's Representatives, including without limitation engineering, architectural, inspection and general administrative functions, at any time with notice and without liability to Contractor. Each Owner's Representative is the beneficiary of all Contractor obligations to Owner, including without limitation, all releases and indemnities.

2.3 Consulting Engineer: HDR, 2365 Iron Point Road, Suite 300, Folsom, California 95630. Consulting Engineer's duties will include only assistance to Owner during construction including, but not limited to, submittal review and responses to Contractor Requests for Information. Consulting Engineer has no authority to act on behalf of Owner, to stop Work, to interpret conditions of the Contract, or to give direction to Contractor.

2.4 All notices or demands to Owner under the Contract Documents shall be to Owner's Representative at:

Hard copies: 404 Aviation Blvd., Santa Rosa, California 95403-9019
Electronic: address to be provided to Contractor by Owner with Notice to Proceed

or to such other person(s) and address(es) as Owner shall provide to Contractor.

Article 3. Contract Time and Liquidated Damages

3.1 Contract Time.

Contractor shall commence Work on the date established in the Notice to Proceed. Owner reserves the right to modify or alter the Commencement Date of the Work.

Contractor shall achieve Substantial Completion of the entire Work within 144 Days from the date when the Contract Time commences to run as provided in Document 00700 (General Conditions). Contractor shall achieve Final Completion of the entire Work and be ready for Final Payment in accordance with Section 01770 (Contract Closeout) 158 Days from the date when the Contract Time commences to run as provided in Document 00700 (General Conditions).

3.2 Liquidated Damages.

Owner and Contractor recognize that time is of the essence of this Agreement and that Owner will suffer financial loss in the form of Contract administration expenses (such as Project management and consultant expenses), if all or any part of the Work is not completed within the times specified above, plus any extensions thereof allowed in accordance with the Contract Documents. Consistent with Article 15 of Document 00700 (General Conditions), Contractor and Owner agree that because of the nature of the Project, it would be impractical or extremely difficult to fix the amount of actual damages incurred by Owner because of a delay in completion of all or any part of the Work. Accordingly, Owner and Contractor agree that as liquidated damages for delay Contractor shall pay Owner:

3.2.1 One thousand, four hundred dollars ($1,400.00) for each Day that expires after the time specified herein for Contractor to achieve Substantial Completion of the entire Work, until achieved.

3.2.2 Six hundred dollars ($600.00) for each Day that expires after the time specified herein for Contractor to achieve Final Completion of the entire Work, until achieved.

These measures of liquidated damages shall apply cumulatively and except as provided below, shall be presumed to be the damages suffered by Owner resulting from delay in completion of the Work.

Liquidated damages for delay shall only cover administrative, overhead, interest on bonds, and general loss of public use damages suffered by Owner as a result of delay. Liquidated damages shall not cover the cost of completion of the Work, or other damages, including but not limited to damages resulting from Defective Work, lost revenues or costs of substitute facilities, penalties and other costs associated with violation of legal requirements or damages suffered by others who then seek to recover their damages from Owner (for example, delay claims of other contractors, subcontractors, tenants, or other third-parties), and defense costs thereof.

Article 4. Contract Sum

4.1 Owner shall pay Contractor the Contract Sum for completion of Work in accordance with Contract Documents as follows:

ITEM	DESCRIPTION	ESTIMATED QUANTITY	UNIT	UNIT PRICE	TOTAL
1.	Bonds	XXXXXX	Lump Sum	XXXXX	$
2.	Insurance	XXXXXX	Lump Sum	XXXXX	$
3.	Safety Program and Implementation	XXXXXX	Lump Sum	XXXXX	$
4.	Construction Material Waste Management Plan and Implementation	XXXXXX	Lump Sum	XXXXX	$
5.	Installation, Operation, and Maintenance Manuals	XXXXXX	Lump Sum	XXXXX	$
6.	Storm Water Pollution Prevention Plan and Implementation	XXXXXX	Lump Sum	XXXXX	$
7.	Mobilization/ Demobilization	XXXXXX	Lump Sum	XXXXX	$
8.	Clearing and Grubbing	XXXXXX	Lump Sum	XXXXX	$
9.	Earthwork	XXXXXX	Lump Sum	XXXXX	$

ITEM	DESCRIPTION	ESTIMATED QUANTITY	UNIT	UNIT PRICE	TOTAL
10.	Overexcavation	5,000	Cubic Yard	$	$
11.	Geogrid Road	42,500	Square Foot	$	$
12.	High-Density Polyethylene Liner	386,900	Square Foot	$	$
13.	Liner Appurtenances	XXXXXX	Lump Sum	XXXXX	$
14.	Chain Link Fence and Gates	1,970	Linear Foot	$	$
15.	Drainage Improvements	XXXXXX	Lump Sum	XXXXX	$
16.	Revegetation and Landscaping	XXXXXX	Lump Sum	XXXXX	$
17.	Reservoir Inlet Structure	XXXXXX	Lump Sum	XXXXX	$
18.	Reservoir Overflow Structure	XXXXXX	Lump Sum	XXXXX	$
19.	24-Inch Reservoir Inlet Pipe	124	Linear Foot	$	$
20.	4-Inch Reservoir Inlet Pipe	370	Linear Foot	$	
21.	18-Inch Watmaugh Export Pipe	825	Linear Foot	$	
22.	24-Inch Overflow Pipe	204	Linear Foot	$	$
23.	3W System Connection for 4-Inch Reservoir Inlet Pipe	XXXXXX	Lump Sum	XXXXX	$
24.	Export Pumping Station	XXXXXX	Lump Sum	XXXXX	$
25.	Chemical Feed Provisions	XXXXXX	Lump Sum	XXXXX	$
26.	Recycled Water Pump	XXXXXX	Lump Sum	XXXXX	$
27.	Electrical	XXXXXX	Lump Sum	XXXXX	$
28.	Project Funding Sign	1	Each	$	$
29.	All Other Work	XXXXXX	Lump Sum	XXXXX	$
				TOTAL BID PRICE	$
30.	Contingency Reserve	XXXXXX	XXXXXX	XXXXX	$25,000.00
				TOTAL	$

Article 5. Contractor's Representations

In order to induce Owner to enter into this Agreement, Contractor makes the following representations and warranties:

5.1 Contractor has visited the Site and has examined thoroughly and understood the nature and extent of the Contract Documents, Work, Site, locality, actual conditions, as-built conditions, and all local conditions, and federal, state and local laws and regulations that in any manner may affect cost, progress, performance or furnishing of Work or which relate to any aspect of the means, methods, techniques, sequences or procedures of construction to be employed by Contractor and safety precautions and programs incident thereto.

5.2 Contractor has examined thoroughly and understood all reports of exploration and tests of subsurface conditions, as-built drawings, drawings, products specifications or reports, available for Bidding purposes, of physical conditions, including Underground Facilities, which are identified in Document 00320 (Geotechnical Data and Existing Conditions) and Document 00335 (Hazardous Materials Documentation), or which may appear in the Drawings. Contractor accepts the determination set forth in these Documents and Document 00700 (General Conditions) of the limited extent of the information contained in such materials upon which Contractor may be entitled to rely. Contractor agrees that except for the information so identified, Contractor does not and shall not rely on any other information contained in such reports and drawings.

5.3 Contractor has conducted or obtained and has understood all such examinations, investigations, explorations, tests, reports and studies (in addition to or to supplement those referred to in Section 5.2 of this Document 00520) that pertain to the subsurface conditions, as-built conditions, Underground Facilities and all other physical conditions at or contiguous to the Site or otherwise that may affect the cost, progress, performance or furnishing of Work, as Contractor considers necessary for the performance or furnishing of Work at the Contract Sum, within the Contract Time and in accordance with the other terms and conditions of the Contract Documents, including specifically the provisions of Document 00700 (General Conditions); and no additional examinations, investigations, explorations, tests, reports, studies or similar information or data are or will be required by Contractor for such purposes.

5.4 Contractor has correlated its knowledge and the results of all such observations, examinations, investigations, explorations, tests, reports and studies with the terms and conditions of the Contract Documents.

5.5 Contractor has given Owner prompt written notice of all conflicts, errors, ambiguities, or discrepancies that it has discovered in or among the Contract Documents and as-built drawings and actual conditions and the written resolution thereof through Addenda issued by Owner is acceptable to Contractor.

5.6 Contractor is duly organized, existing and in good standing under applicable state law, and is duly qualified to conduct business in the State of California.

5.7 Contractor has duly authorized the execution, delivery and performance of this Agreement, the other Contract Documents and the Work to be performed herein. The Contract Documents do not violate or create a default under any instrument, agreement, order or decree binding on Contractor.

5.8 Contractor has listed the following Subcontractors pursuant to the Subcontractor Listing Law, California Public Contract Code §4100 *et seq.*:

Name of Subcontractor and Location of Mill or Shop	Description of Work: Reference To Bid Items	Subcontractor's License No.

5.9 Contractor has designated _____ [name], _____, [title] to act as Contractor's Representative(s), who will represent Contractor in performing Contractor's duties and responsibilities and exercising Contractor's rights and authorities in Contract Documents. Contractor may change the individual(s) acting as Contractor's Representative(s), or delegate one or more specific functions to one or more specific Contractor's Representatives, at any time with written notice and without liability to Owner, but Contractor is limited to two representatives.

Article 6. Contract Documents

6.1 Contract Documents consist of the following documents, including all changes, Addenda, and Modifications thereto:

Document 00510 Notice of Award
Document 00520 Agreement
Document 00550 Notice to Proceed
Document 00610 Construction Performance Bond
Document 00620 Construction Labor and Material Payment Bond
Document 00630 Guaranty
Document 00650 Agreement and Release of Any and All Claims
Document 00660 Substitution Request Form
Document 00670 Escrow Bid Documents
Document 00680 Escrow Agreement for Security Deposit in Lieu of Retention
Document 00700 General Conditions
Document 00800 Supplementary Conditions
Document 00805 Supplementary Conditions – Hazardous Materials
Document 00910 Addenda
Specifications Divisions 1 through 16
Drawings listed in Drawing No. G01

6.2 There are no Contract Documents other than those listed in this Document 00520, Article 6. Document 00320 (Geotechnical Data and Existing Conditions) and Document 00335 (Hazardous Materials Documentation), and the information supplied through this document, are not Contract Documents. The Contract Documents may only be amended, modified or supplemented as provided in Document 00700 (General Conditions).

Article 7. Miscellaneous

7.1 Terms and abbreviations used in this Agreement are defined in Document 00700 (General Conditions) and Section 01420 (References and Definitions) and will have the meaning indicated therein.

7.2 It is understood and agreed that in no instance are the persons signing this Agreement for or on behalf of Owner or acting as an employee, agent, or representative of Owner, liable on this Agreement or any of the Contract Documents, or upon any warranty of authority, or otherwise, and it is further understood and agreed that liability of the Owner is limited and confined to such liability as authorized or imposed by the Contract Documents or applicable law.

7.3 Contractor shall not assign any portion of the Contract Documents, and may subcontract portions of the Contract Documents only in compliance with the Subcontractor Listing Law, California Public Contract Code §4100 *et seq*. This Contract shall not be assigned or transferred without approval of Owner's Board of Directors. Any such assignment or transfer without approval of Owner's Board of Directors shall be void and of no force and effect.

7.4 The Contract Sum includes all allowances (if any).

7.5 In entering into a public works contract or a subcontract to supply goods, services or materials pursuant to a public works contract, Contractor or Subcontractor offers and agrees to assign to the awarding body all rights, title and interest in and to all causes of action it may have under Section 4 of the Clayton Act (15 U.S.C. §15) or under the Cartwright Act (Chapter 2 (commencing with Section 16700) of Part 2 of Division 7 of the Business and Professions Code), arising from purchases of goods, services or materials pursuant to the public works contract or the subcontract. This assignment shall be made and become effective at the time Owner tenders final payment to Contractor, without further acknowledgment by the parties.

7.6 Copies of the general prevailing rates of per diem wages for each craft, classification, or type of worker needed to execute the Contract, as determined by Director of the State of California Department of Industrial Relations, are deemed included in the Contract Documents and on file at Owner's Office, and shall be made available to any interested party on request. Owner has obtained the Federal Wage Decision as predetermined by the United States Secretary of Labor listing the general prevailing wages and fringes in the County in which the Work is to be performed for each craft and type of worker or mechanic needed to execute the Work. A copy of the Federal Wage Decision containing the Federal minimum wage rates for this project as predetermined by the United States Secretary of Labor is included in Document 01415 (Regulatory Requirements – Funding). Contractor shall post said minimum wage rates in a prominent place at the Site. If there is a discrepancy or difference between the state prevailing wage rate and the federal minimum wage rate, Contractor shall pay not less than the higher wage rate. The current minimum federal or state wage rate in effect during the applicable pay

period over the entire construction period shall be used. Owner will not accept lower State wage rates not specifically included in the Federal minimum wage determinations. This includes "helper" (or other classifications based on hours of experience) or any other classification not appearing in the Federal wage determinations. Where Federal wage determinations do not contain the State wage rate determination otherwise available for use by the Contractor, the Contractor shall pay not less than the Federal minimum wage rate which most closely approximates the duties of the employees in question. Pursuant to Section 1861 of the Labor Code, Contractor represents that it is aware of the provisions of Section 3700 of the Labor Code which require every employer to be insured against liability for workers' compensation or to undertake self-insurance in accordance with the provisions of that Code, and Contractor shall comply with such provisions before commencing the performance of the Work of the Contract Documents.

7.7 Should any part, term or provision of this Agreement or any of the Contract Documents, or any document required herein or therein to be executed or delivered, be declared invalid, void or unenforceable, all remaining parts, terms and provisions shall remain in full force and effect and shall in no way be invalidated, impaired or affected thereby. If the provisions of any law causing such invalidity, illegality or unenforceability may be waived, they are hereby waived to the end that this Agreement and the Contract Documents may be deemed valid and binding agreements, enforceable in accordance with their terms to the greatest extent permitted by applicable law. In the event any provision not otherwise included in the Contract Documents is required to be included by any applicable law, that provision is deemed included herein by this reference (or, if such provision is required to be included in any particular portion of the Contract Documents, that provision is deemed included in that portion).

7.8 This Agreement and the Contract Documents shall be deemed to have been entered into in the County of Sonoma, State of California, and governed in all respects by California law (excluding choice of law rules). The exclusive venue for all disputes or litigation hereunder shall be in Sonoma County.

7.9 Contractor accepts the claims procedure established by Article 12 of Document 00700 (General Conditions), as established under Section 930.2 et seq. of the California Government Code.

/
/
/
/
/
/
/
/
/
/
/

IN WITNESS WHEREOF the parties have executed this Agreement in quadruplicate the day and year first above written.

Reviewed as to substance by Owner:

_____
Grant Davis, Agency's General Manager

Reviewed as to funds by Owner:

_____
Division Manager - Administrative Services

Reviewed as to form by County Counsel:

_____
County Counsel

Certificates of Insurance and Guaranty are on file with and reviewed as to substance for Owner by:

_____
Contract Administration/Inspection Date

Attest:

_____
Clerk of the Board of Directors

CONTRACTOR:

_____
[Contractor's name]

By: _____
[Signature]

_____
[Please print name here]

Title: _____
[If Corporation: Chairman, President, or Vice President]

By: _____
[Signature]

_____
[Please print name here]

Title: _____
[If Corporation: Secretary, Assistant Secretary, Chief Financial Officer, or Assistant Treasurer]

OWNER:

SONOMA VALLEY COUNTY SANITATION DISTRICT, a Local District of the State of California

By: _____
Chair, Board of Directors

END OF DOCUMENT

DOCUMENT 00550

NOTICE TO PROCEED

Dated: _____, 20__

To: _____

_____
(Contractor)

Address: _____

_____

CONTRACT FOR: **CONTRACT NUMBER 70-12-7 #45**

You are notified that the Contract Time under the above Contract will commence to run on _____ 20___. On that date, you are to start performing your obligations with respect to Work under the Contract Documents. In accordance with Article 3 of Document 00520 (Agreement), the dates of Substantial Completion and Final Completion for the entire Work are _____, 20___ and _____, 20___, respectively.

In accordance with Article 11 of Document 00700 (General Conditions), on _____[date] you must submit preliminary schedules (Initial Schedule, Schedule of Submittals, and Schedule of Values).

In accordance with Section 01315 (Project Meetings), on _____ [date] you must attend a Schedule Review Meeting.

Before you may start any Work at the Site, you must:

1. Attend Preconstruction Conference
2. Submit approved fire protection plan, if applicable
3. Submit copies of applicable permits
4. Submit Construction Material Waste Management Plan
5. Submit and obtain favorable review of the following:
   - Certified Safety Program and related information
   - Storm Water Pollution Prevention Plan (SWPPP)
   - Project signage
   - Earthwork Plan
   - Dewatering Plan
   - Asbestos Cement Pipe Disposal Plan

[add conditions, if any]_____

_____

From this date forward, submit one electronic copy and at least one hard copy of all Project documents, unless otherwise required by the Contract Documents. Submit electronic copies to: Cordel Stillman (cordel@scwa.ca.gov), Dennis Daly (ddaly@scwa.ca.gov), and Lori Soto (Lori.Soto@scwa.ca.gov).

Upon commencement of the Work, you and each of your Subcontractors shall certify and provide Owner copies of payroll records on forms provided by the Division of Labor Standards Enforcement, in accordance with Section 1776 of the California Labor Code.

SONOMA VALLEY COUNTY SANITATION DISTRICT,
A Local District of the State of California

By : _____

Its: _____

[Notice to be sent in manner required by Contract Documents]

END OF DOCUMENT

DOCUMENT 00610

CONSTRUCTION PERFORMANCE BOND
STANDARD EDITION

THIS CONSTRUCTION PERFORMANCE BOND ("Bond") dated _____, is in the penal sum of _____
_____
[which is one hundred percent of the Contract Sum], and is entered into by and between the parties listed below to ensure the faithful performance of the Construction Contract listed below. This Bond consists of this page and the Bond Terms and Conditions, paragraphs 1 through 12, attached to this page. Any singular reference to _____ [insert name of Contractor] ("Contractor"), _____ [insert name of Surety] ("Surety"), Sonoma Valley County Sanitation District, a local district of the State of California ("Owner") or other party shall be considered plural where applicable.

CONTRACTOR:	SURETY:
_____	_____
Name	Name
_____	_____
Address	Principal Place of Business
_____	_____
City/State/Zip	City/State/Zip

CONSTRUCTION CONTRACT:

BAY WATER REUSE PROGRAM -
SONOMA VALLEY EFFLUENT RESERVOIR R5
CONTRACT NUMBER 70-12-7 #45

at Sonoma Valley County Sanitation District Wastewater Treatment Plant, 22333 8th Street East, Sonoma, California

Signed_____, 20____ in the Amount of $_____ (the "Penal Sum")

CONTRACTOR AS PRINCIPAL	SURETY
Company: (Corp. Seal)	Company: (Corp. Seal)
Signature:_____	Signature: _____
Name and Title:_____	Name and Title:_____
_____	_____

BOND TERMS AND CONDITIONS

1. Contractor and Surety, jointly and severally, bind themselves, their heirs, executors, administrators, successors and assigns to Owner for the complete and proper performance of the Construction Contract, which is incorporated herein by reference.

2. If Contractor completely and properly performs all of its obligations under the Construction Contract, Surety and Contractor shall have no obligation under this Bond.

3. If there is no Owner Default, Surety's obligation under this Bond shall arise after:

   3.1 Owner has declared a Contractor Default under the Construction Contract pursuant to the terms of the Construction Contract; and

   3.2 Owner has agreed to pay the Balance of the Contract Sum:

      3.2.1 To Surety in accordance with the terms of this Bond and the Construction Contract; or

      3.2.2 To a contractor selected to perform the Construction Contract in accordance with the terms of this Bond and the Construction Contract.

4. When Owner has satisfied the conditions of paragraph 3, Surety shall promptly (within 30 Days) and at Surety's expense elect to take one of the following actions:

   4.1 Arrange for Contractor, with consent of Owner, to perform and complete the Construction Contract (but Owner may withhold consent, in which case the Surety must elect an option described in paragraphs 4.2, 4.3 or 4.4, below); or

   4.2 Undertake to perform and complete the Construction Contract itself, through its agents or through independent contractors; provided, that Surety may not select Contractor as its agent or independent contractor without Owner's consent; or

   4.3 Undertake to perform and complete the Construction Contract by obtaining bids from qualified contractors acceptable to Owner for a contract for performance and completion of the Construction Contract and, upon determination by Owner of the lowest responsive and responsible Bidder, arrange for a contract to be prepared for execution by Owner and the contractor selected with Owner's concurrence, to be secured with performance and payment bonds executed by a qualified surety equivalent to the bonds issued on the Construction Contract; and, if Surety's obligations defined in paragraph 6, below, exceed the Balance of the Contract Sum, then Surety shall pay to Owner the amount of such excess; or

   4.4 Waive its right to perform and complete, arrange for completion, or obtain a new contractor and with reasonable promptness under the circumstances and, after investigation and consultation with Owner, determine in good faith its monetary obligation to Owner under paragraph 6, below, for the performance and completion of the Construction Contract and, as soon as practicable after the amount is determined, tender

payment therefor to Owner with full explanation of the payment's calculation. If Owner accepts Surety's tender under this paragraph 4.4, Owner may still hold Surety liable for future damages then unknown or unliquidated resulting from the Contractor Default. If Owner disputes the amount of Surety's tender under this paragraph 4.4, Owner may exercise all remedies available to it at law to enforce Surety's liability under paragraph 6, below.

5. If Surety does not proceed as provided in paragraph 4, above, then Surety shall be deemed to be in default on this Bond ten Days after receipt of an additional written notice from Owner to Surety demanding that Surety perform its obligations under this Bond. At all times Owner shall be entitled to enforce any remedy available to Owner at law or under the Construction Contract including, without limitation, and by way of example only, rights to perform work, protect Work, mitigate damages, advance critical Work to mitigate schedule delay, or coordinate Work with other consultants or contractors.

6. Surety's monetary obligation under this Bond is limited by the amount of this Bond identified herein as the Penal Sum. This monetary obligation shall augment the Balance of the Contract Sum. Subject to these limits, Surety's obligations under this Bond are commensurate with the obligations of Contractor under the Construction Contract. Surety's obligations shall include, but are not limited to:

   6.1 The responsibilities of Contractor under the Construction Contract for completion of the Construction Contract and correction of Defective Work;

   6.2 The responsibilities of Contractor under the Construction Contract to pay liquidated damages, and for damages for which no liquidated damages are specified in the Construction Contract, actual damages caused by non-performance of the Construction Contract including, but not limited to, all valid and proper backcharges, offsets, payments, indemnities, or other damages;

   6.3 Additional legal, design professional and delay costs resulting from Contractor Default or resulting from the actions or failure to act of the Surety under paragraph 4, above (but excluding attorney's fees incurred to enforce this Bond).

7. No right of action shall accrue on this Bond to any person or entity other than Owner or its successors or assigns.

8. Surety hereby waives notice of any change, alteration or addition to the Construction Contract or to related subcontracts, purchase orders and other obligations, including changes of time. Surety consents to all terms of the Construction Contract, including provisions on changes to the Contract. No extension of time, change, alteration, Modification, deletion, or addition to the Contract Documents, or of the Work required thereunder, shall release or exonerate Surety on this Bond or in any way affect the obligations of Surety on this Bond.

9. Any proceeding, legal or equitable, under this Bond shall be instituted in any court of competent jurisdiction where a proceeding is pending between Owner and Contractor regarding the Construction Contract, or in the courts of the County of Sonoma, or in a court of competent jurisdiction in the location in which the Work is located. Communications from

Owner to Surety under paragraph 3.1 of this Bond shall be deemed to include the necessary agreements under paragraph 3.2 of this Bond unless expressly stated otherwise.

10. All notices to Surety or Contractor shall be mailed or delivered (at the address set forth on the signature page of this Bond), and all notices to Owner shall be mailed or delivered as provided in Document 00520 (Agreement). Actual receipt of notice by Surety, Owner or Contractor, however accomplished, shall be sufficient compliance as of the date received at the foregoing addresses.

11. Any provision in this Bond conflicting with any statutory or regulatory requirement shall be deemed deleted herefrom and provisions conforming to such statutory requirement shall be deemed incorporated herein.

12. Definitions.

    12.1 Balance of the Contract Sum: The total amount payable by Owner to Contractor pursuant to the terms of the Construction Contract after all proper adjustments have been made under the Construction Contract, for example, deductions for progress payments made, and increases/decreases for approved Modifications to the Construction Contract.

    12.2 Construction Contract: The agreement between Owner and Contractor identified on the signature page of this Bond, including all Contract Documents and changes thereto.

    12.3 Contractor Default: Material failure of Contractor, which has neither been remedied nor waived, to perform or otherwise to comply with the terms of the Construction Contract including, but not limited to, "default" or any other condition allowing a termination for cause as provided in Document 00700 (General Conditions).

    12.4 Owner Default: Material failure of Owner, which has neither been remedied nor waived, to pay Contractor progress payments due under the Construction Contract or to perform other material terms of the Construction Contract, if such failure is the cause of the asserted Contractor Default and is sufficient to justify Contractor termination of the Construction Contract.

END OF DOCUMENT

DOCUMENT 00620

CONSTRUCTION LABOR AND MATERIAL PAYMENT BOND
STANDARD EDITION

THIS CONSTRUCTION LABOR AND MATERIAL PAYMENT BOND ("Bond") is dated _____, is in the penal sum of _____
_____
[one hundred percent of the Contract Sum, and is entered into by and between the parties listed below to ensure the payment of claimants under the Construction Contract listed below. This Bond consists of this page and the Bond Terms and Conditions, paragraphs 1 through 13, attached to this page. Any singular reference to _____ [insert name of Contractor] ("Contractor"), _____ [insert name of Surety] ("Surety"), the Sonoma Valley County Sanitation District, a local district of the State of California ("Owner") or other party shall be considered plural where applicable.

CONTRACTOR:	SURETY:
_____	_____
Name	Name
_____	_____
Address	Principal Place of Business
_____	_____
City/State/Zip	City/State/Zip

CONSTRUCTION CONTRACT:

BAY WATER REUSE PROGRAM -
SONOMA VALLEY EFFLUENT RESERVOIR R5
CONTRACT NUMBER 70-12-7 #45

at Sonoma Valley County Sanitation District Wastewater Treatment Plant, 22333 8th Street East, Sonoma, California

Signed _____, 20____ in the Amount of $_____(the "Penal Sum")

CONTRACTOR AS PRINCIPAL	SURETY
Company: (Corp. Seal)	Company: (Corp. Seal)
Signature:_____	Signature: _____
Name and Title:_____	Name and Title:_____
_____	_____

BOND TERMS AND CONDITIONS

1. Contractor and Surety, jointly and severally, bind themselves, their heirs, executors, administrators, successors and assigns to Owner and to Claimants, to pay for labor, materials and equipment furnished for use in the performance of the Construction Contract, which is incorporated herein by reference.

2. With respect to Owner, this obligation shall be null and void if Contractor:

   2.1 Promptly makes payment, directly or indirectly, for all sums due Claimants; and

   2.2 Defends, indemnifies and holds harmless Owner from all claims, demands, liens or suits by any person or entity who furnished labor, materials or equipment for use in the performance of the Construction Contract, provided Owner has promptly notified Contractor and Surety (at the address set forth on the signature page of this Bond) of any claims, demands, liens or suits and tendered defense of such claims, demands, liens or suits to Contractor and Surety, and provided there is no Owner Default.

3. With respect to Claimants, this obligation shall be null and void if Contractor promptly makes payment, directly or indirectly through its Subcontractors, for all sums due Claimants. If Contractor or its Subcontractors, however, fail to pay any of the persons named in Section 3181 of the California Civil Code, or amounts due under the Unemployment Insurance Code with respect to Work or labor performed under the Contract, or for any amounts required to be deducted, withheld, and paid over to the Employment Development Department from the wages of employees of Contractor or Subcontractors pursuant to Section 13020 of the Unemployment Insurance Code, with respect to such Work and labor, then Surety shall pay for the same, and also, in case suit is brought upon this Bond, a reasonable attorney's fee, to be fixed by the court.

4. Consistent with the California Mechanic's Lien Law, Civil Code §3082, *et seq*., Surety shall have no obligation to Claimants under this Bond unless the Claimant has satisfied all applicable notice requirements.

5. Surety's total obligation shall not exceed the amount of this Bond, and the amount of this Bond shall be credited for any payments made in good faith by Surety under this Bond.

6. Amounts due Contractor under the Construction Contract shall be applied first to satisfy claims, if any, under any Construction Performance Bond and second, to satisfy obligations of Contractor and Surety under this Bond.

7. Owner shall not be liable for payment of any costs, expenses, or attorney's fees of any Claimant under this Bond, and shall have under this Bond no obligations to make payments to, give notices on behalf of, or otherwise have obligations to Claimants under this Bond.

8. Surety hereby waives notice of any change, including changes of time, to the Construction Contract or to related subcontracts, purchase orders and other obligations. Surety further hereby stipulates and agrees that no change, extension of time, alteration or addition to the terms of the Construction Contract, or to the Work to be performed thereunder, or materials or

equipment to be furnished thereunder or the Specifications accompanying the same, shall in any way affect its obligations under this Bond, and it does hereby waive any requirement of notice or any such change, extension of time, alteration or addition to the terms of the Construction Contract or to the Work or to the Specifications or any other changes.

9. Suit against Surety on this Bond may be brought by any Claimant, or its assigns, at any time after the Claimant has furnished the last of the labor or materials, or both, but, per Civil Code §3249, must be commenced before the expiration of six months after the period in which stop notices may be filed as provided in Civil Code §3184.

10. All notices to Surety or Contractor shall be mailed or delivered (at the address set forth on the signature page of this Bond), and all notices to Owner shall be mailed or delivered as provided in Document 00520 (Agreement). Actual receipt of notice by Surety, Owner or Contractor, however accomplished, shall be sufficient compliance as of the date received at the foregoing addresses.

11. This Bond has been furnished to comply with the California Mechanic's Lien Law including, but not limited to, Civil Code §§3247, 3248, *et seq*. Any provision in this Bond conflicting with said statutory requirements shall be deemed deleted herefrom and provisions conforming to such statutory or other legal requirements shall be deemed incorporated herein. The intent is that this Bond shall be construed as a statutory bond and not as a common law bond.

12. Upon request by any person or entity appearing to be a potential beneficiary of this Bond, Contractor shall promptly furnish a copy of this Bond or shall permit a copy to be made.

13. Definitions.

    13.1.1 Claimant: An individual or entity having a direct contract with Contractor or with a Subcontractor of Contractor to furnish labor, materials or equipment for use in the performance of the Contract, as further defined in California Civil Code §3181. The intent of this Bond shall be to include without limitation in the terms "labor, materials or equipment" that part of water, gas, power, light, heat, oil, gasoline, telephone service or rental equipment used in the Construction Contract, architectural and engineering services required for performance of the Work of Contractor and Contractor's Subcontractors, and all other items for which a stop notice might be asserted. The term Claimant shall also include the Unemployment Development Department as referred to in Civil Code §3248(b).

    13.1.2 Construction Contract: The agreement between Owner and Contractor identified on the signature page of this Bond, including all Contract Documents and changes thereto.

    13.1.3 Owner Default: Material failure of Owner, which has neither been remedied nor waived, to pay the Contractor as required by the Construction Contract, provided that failure is the cause of the failure of Contractor to pay the Claimants and is sufficient to justify termination of the Construction Contract.

END OF DOCUMENT

DOCUMENT 00630

GUARANTY

To the SONOMA VALLEY COUNTY SANITATION DISTRICT, for construction of

BAY WATER REUSE PROGRAM -
SONOMA VALLEY EFFLUENT RESERVOIR R5

_____ Sonoma County, California

The undersigned guarantees all construction performed on this Project and also guarantees all material and equipment incorporated therein.

Contractor hereby grants to Owner for a period of one year following the date of Final Acceptance of the Work completed, or such longer period specified in the Contract Documents, its unconditional warranty of the quality and adequacy of all of the Work including, without limitation, all labor, materials and equipment provided by Contractor and its Subcontractors of all tiers in connection with the Work.

Neither final payment nor use or occupancy of the Work performed by the Contractor shall constitute an acceptance of Work not done in accordance with this Guaranty or relieve Contractor of liability in respect to any express warranties or responsibilities for faulty materials or workmanship. Contractor shall remedy any defects in the Work and pay for any damage resulting therefrom, which shall appear within one year, or longer if specified, from the date of Final Acceptance of the Work completed.

If within one year after the date of Final Acceptance of the Work completed, or such longer period of time as may be prescribed by laws or regulations, or by the terms of Contract Documents, any Work is found to be Defective, Contractor shall promptly, without cost to Owner and in accordance with Owner's written instructions, correct such Defective Work. Contractor shall remove any Defective Work rejected by Owner and replace it with Work that is not Defective, and satisfactorily correct or remove and replace any damage to other Work or the work of others resulting therefrom. If Contractor fails to promptly comply with the terms of such instructions, or in an emergency where delay would cause serious risk of loss or damage, Owner may have the Defective Work corrected or the rejected Work removed and replaced. Contractor shall pay for all claims, costs, losses and damages caused by or resulting from such removal and replacement. Where Contractor fails to correct Defective Work, or defects are discovered outside the correction period, Owner shall have all rights and remedies granted by law.

Inspection of the Work shall not relieve Contractor of any of its obligations under the Contract Documents. Even though equipment, materials, or Work required to be provided under the Contract Documents have been inspected, accepted, and estimated for payment, Contractor shall, at its own expense, replace or repair any such equipment, material, or Work found to be Defective or otherwise not to comply with the requirements of the Contract Documents up to the end of the guaranty period.

All abbreviations and definitions of terms used in this Agreement shall have the meanings set forth in the Contract Documents, including, without means of limitation, Document 00700 (General Conditions) and Section 01420 (References and Definitions).

The foregoing Guaranty is in addition to any other warranties of Contractor contained in the Contract Documents, and not in lieu of, any and all other liability imposed on Contractor under the Contract Documents and at law with respect to Contractor's duties, obligations, and performance under the Contract Documents. In the event of any conflict or inconsistency between the terms of this Guaranty and any warranty or obligation of the Contractor under the Contract Documents or at law, such inconsistency or conflict shall be resolved in favor of the higher level of obligation of the Contractor.

_____
[Contractor's name]

By: _____
[Signature]

_____
[Please print name here]

Title: _____

Business Address:_____
_____
_____

Date: _____

END OF DOCUMENT

DOCUMENT 00650

AGREEMENT AND RELEASE OF ANY AND ALL CLAIMS

THIS AGREEMENT AND RELEASE OF ANY AND ALL CLAIMS ("Agreement and Release"), made and entered into this _____ [date] day of _____ [month], _____ [year], by and between the Sonoma Valley County Sanitation District, a local district of the State of California ("Owner"), and _____ [name of Contractor] ("Contractor"), whose place of business is at _____ _____ [address of Contractor].

RECITALS

A. Owner and Contractor entered into Contract Number 70-12-7 #45 (the "Contract").

B. The Work under the Contract has been completed.

Now, therefore, it is mutually agreed between Owner and Contractor as follows:

AGREEMENT

1. Contractor will not be assessed liquidated damages except as detailed below:

Original Contract Sum	$ _____
Modified Contract Sum	$ _____
Payment to Date	$ _____
Liquidated Damages	$ _____
Payment Due Contractor	$ _____

2. Subject to the provisions of this Agreement and Release, Owner will forthwith pay to Contractor the sum of $_____ Dollars and _____ Cents ($_____) under the Contract, less any amounts withheld under the Contract or represented by any Notice to Withhold Funds on file with Owner as of the date of such payment.

3. Contractor acknowledges and hereby agrees that there are no unresolved or outstanding claims in dispute against Owner arising from the Contract, except for the claims described in paragraph 4 of this Document 00650. It is the intention of the parties in executing this Agreement and Release that this Agreement and Release shall be effective as a full, final and general release of all claims, demands, actions, causes of action, obligations, costs, expenses, damages, losses and liabilities of Contractor against Owner, and all of its agents, employees, consultants, inspectors, representatives, assignees and transferees, including without limitation the Sonoma County Water Agency ("Agency"), except for the Disputed Claims set forth in paragraph 4 of this Document 00650. Nothing in this Agreement and Release shall limit or modify Contractor's continuing obligations described in paragraph 6 of this Document 00650.

4. The following claims submitted under Document 00700 (General Conditions), Article 12, are disputed (hereinafter, the "Disputed Claims") and are specifically excluded from the operation of this Agreement and Release:

Claim No.	Date Submitted	Description of Claim	Amount of Claim

[Insert information, including attachment if necessary]

5. Consistent with California Public Contract Code Section 7100, Contractor hereby agrees that, in consideration of the payment set forth in paragraph 2 of this Document 00650, Contractor hereby releases and forever discharges Owner, and all of its agents, employees, consultants, inspectors, assignees and transferees from any and all liability, claims, demands, actions or causes of action of whatever kind or nature arising out of or in any way concerned with the Work under the Contract.

6. Guarantees and warranties for the Work, and any other continuing obligation of Contractor, shall remain in full force and effect as specified in the Contract Documents.

7. Contractor shall immediately defend, indemnify and hold harmless Owner, any Owner's Representatives, Engineer, and all of their agents, employees, consultants, inspectors, assignees and transferees, including without limitation the Agency, from any and all claims, demands, actions, causes of action, obligations, costs, expenses, damages, losses and liabilities that may be asserted against them by any of Contractor's suppliers and/or Subcontractors of any tier and/or any suppliers to them for any and all labor, materials, supplies and equipment used, or contemplated to be used in the performance of the Contract, except for the Disputed Claims set forth in paragraph 4 of this Document 00650.

8. Contractor hereby waives the provisions of California Civil Code Section 1542, which provide as follows:

> A general release does not extend to claims which the creditor does not know or suspect to exist in his favor at the time of executing the release, which if known by him, must have materially affected his settlement with the debtor.

9. The provisions of this Agreement and Release are contractual in nature and not mere recitals and shall be considered independent and severable, and if any such provision or any part thereof shall be at any time held invalid in whole or in part under any federal, state, county, municipal or other law, ruling, or regulation, then such provision, or part thereof shall remain in force and effect only to the extent permitted by law, and the remaining provisions of this Agreement and Release shall also remain in full force and effect, and shall be enforceable.

10. Contractor represents and warrants that it is the true and lawful owner of all claims and other matters released pursuant to this Agreement and Release, and that it has full right, title and authority to enter into this instrument. Each party represents and warrants that it has been represented by counsel of its own choosing in connection with this Agreement and Release.

11. All rights of Owner shall survive completion of the Work or termination of the Contract, and execution of this Agreement and Release.

* * * CAUTION: THIS IS A RELEASE - READ BEFORE EXECUTING * * *

SONOMA VALLEY COUNTY SANITATION DISTRICT,
A Local District of the State of California

By: _____

Its: _____

ATTEST:

_____
Clerk of the Board of Directors

[CONTRACTOR]

By: _____

Name: _____

Its: _____

By: _____

Name: _____

Its: _____

REVIEWED AS TO FORM:

_____
County Counsel

_____, 20 _____

END OF DOCUMENT

DOCUMENT 00660

SUBSTITUTION REQUEST FORM

During Bid Period To:	After Award of Contract To:
Erik S. Brown, P.E. Sonoma Valley County Sanitation District Fax: 707-524-3782	Construction Management Section Sonoma Valley County Sanitation District Fax: 707-524-3791

Project: North Bay Water Reuse Program - Sonoma Valley Effluent Reservoir R5

Bidder: _____

Subcontractor/Supplier: _____

Drawing Sheet Reference/Detail No: _____

The undersigned Bidder submits for consideration the following equipment instead of the specified item for the above Project:

Section	Paragraph	Specified Item
_____	_____	_____
_____	_____	_____

Proposed Substitution: _____

_____

The undersigned encloses the information required herein. If this Document 00660 is being submitted by a Bidder wishing to use "equal" item(s) as provided in Document 00200 (Instructions to Bidders), the undersigned Bidder must also enclose the technical information (other than cost) otherwise required for a post-Award of Contract Request for Substitution ("RFS") under Section 01600 (Product Requirements). However, if this Document 00660 is being submitted under provisions of Contract Documents after Award of Contract, the undersigned Contractor must include all information required under Section 01600 (Product Requirements).

The undersigned has (a) attached manufacturer's literature, including complete technical data and laboratory test results, if applicable, (b) attached an explanation of why proposed substitution is a true equivalent to specified item, (c) included complete information on changes to Contract Documents that the proposed substitution will require for its proper installation, and (d) filled in the blanks below:

A. Does the substitution affect dimensions shown on Drawings? (If yes, please explain)

_____

B. Are the manufacturer's guarantees and warranties on the proposed substitution items identical to those on the specified items? If there are differences, please specify each and every difference in detail.

_____

C. What effect does the substitution have on other contractors, trades, or suppliers?

_____

D. What are the differences between the proposed substitution and the specified item? If proposed substitution has a color or pattern, provide a color board showing proposed substitution in relation to the other adjacent colors and patterns.

_____

E. Will granting the requested substitution cause any schedule delay? (If yes, please explain)

_____

The undersigned Bidder certifies that the function, appearance, and quality of the proposed substitution are equivalent or superior to those of the specified item.

Submitted by:

_____
Bidder

_____
Signature

_____
Name

_____
Address

_____
City/State/Zip

Telephone: _____

Date: _____

For Use by Owner:

___ Accepted _____Accepted as Noted

___ Not Accepted _____Received Too Late

By: _____
Owner's Representative

Date: _____

Remarks: _____

_____

_____

_____

END OF DOCUMENT

DOCUMENT 00670

ESCROW BID DOCUMENTS

1. Requirements for Escrow Bid Documents.

   a. Within the time period established in Document 00200 (Instructions to Bidders), Contractor shall submit to Owner a set of Escrow Bid Documents as defined in paragraph 2 below. Escrow Bid Documents will be used only in the manner and for the purposes described in this Document 00670.

   b. The submission of the Escrow Bid Documents, as with the bonds and insurance documents required under Document 00200 (Instructions to Bidders), is considered an essential part of the Contract award. Should Contractor fail to make the submission within the allowed time specified, Contractor may be deemed to have failed to enter into the Contract, Contractor shall forfeit the amount of its Bid security accompanying Contractor's Bid, and Owner may award the Contract to the next lowest responsive responsible Bidder.

   c. NO PAYMENTS WILL BE MADE, NOR WILL OWNER ACCEPT CHANGE ORDER REQUESTS UNTIL THE ABOVE-REQUIRED INFORMATION IS SUBMITTED AND APPROVED. ALTERNATIVELY, OWNER MAY DECLARE THE BID NON-RESPONSIVE.

   d. Contractor shall submit the Escrow Bid Documents, in person by an authorized representative of the Contractor, to:

      Construction Management Section
      Sonoma Valley County Sanitation District
      c/o Sonoma County Water Agency
      404 Aviation Boulevard
      Santa Rosa, California

2. Scope of Escrow Bid Documents.

   a. Within the time period specified in Document 00200 (Instructions to Bidders), Contractor shall submit one copy of all documentary information received or generated by Contractor in preparation of Bid prices for the Contract Documents, as specified in paragraphs 5 and 6 of this Document 00670. This material is referred to in this Document 00670 as the "Escrow Bid Documents." Contractor's Escrow Bid Documents will be held in escrow as provided in this Document 00670.

   b. Contractor represents and agrees, as a condition of award of the Contract, that the Escrow Bid Documents constitute all written information used in the preparation of its Bid, and that no other written Bid preparation information shall be considered in resolving disputes or claims or may be considered in legal proceedings. Contractor also agrees that nothing in the Escrow Bid Documents shall change or modify the terms or conditions of the Contract Documents. Contractor is advised that the Escrow Bid Documents will only be used as a guide in the resolution of disputes and claims.

3. Ownership of Escrow Bid Documents.

   a. The Escrow Bid Documents are, and shall always remain, the property of Contractor, subject to joint review by Owner and Contractor, as provided in this Document 00670.

   b. Owner stipulates and expressly acknowledges that the Escrow Bid Documents constitute trade secrets. This acknowledgement is based on Owner's express understanding that the information contained in the Escrow Bid Documents is not known outside Contractor's business, is known only to a limited extent and only by a limited number of Contractor's Employees, is safeguarded while in Contractor's possession, is extremely valuable to Contractor and could be extremely valuable to Contractor's competitors by virtue of it reflecting Contractor's contemplated construction techniques. Owner further acknowledges that the Escrow Bid Documents and the information contained in them are made available to Owner only because such action is an express pre-requisite to award of the Contract. Owner agrees to safeguard the Escrow Bid Documents, and all information contained in them, against disclosure to the fullest extent permitted by law, consistent with paragraph 4 of this Document 00670.

4. Escrow Bid Documents may be used in the determination of price adjustments and Change Orders and in the settlement of disputes and claims. If used in legal proceedings, Escrow Bid Documents shall be subject to an appropriate protective order limiting their disclosure.

5. Format and Contents of Escrow Bid Documents.

   a. Contractor may submit Escrow Bid Documents in their usual cost-estimating format; a standard format is not required. Contractor shall prepare and submit the Escrow Bid Documents in English.

   b. Owner requires Contractor to itemize clearly in the Escrow Bid Documents the estimated costs of performing the Work of each Bid item contained in Contractor's Bid. Contractor shall separate Bid items into sub-items as required to present a detailed cost estimate and allow a detailed cost review. The Escrow Bid Documents shall include all Subcontractor bids or quotes, supplier bids or quotes, quantity take-offs, crews, equipment, calculations of rates of production and progress, copies of quotes from Subcontractors and suppliers, and memoranda, narratives, add/deduct sheets, and all other information used by Contractor to arrive at the prices contained in the Bid. Escrow Bid Documents shall include costs of scheduled maintenance, depreciation, fleet rental expense discounts and incentives, and similar cost adjustments if used by Contractor to calculate its Bid prices. Estimated costs shall be broken down into Contractor's usual estimate categories such as direct labor, repair labor, equipment ownership and operation, expendable materials, permanent materials and subcontract costs as appropriate. Plant and equipment and indirect costs should be detailed in Contractor's usual format. Contractor shall identify its allocation of indirect costs, contingencies, markup and other items to each Bid item.

   c. Contractor shall identify all costs. For Bid items amounting to less than $10,000, Contractor may estimate costs without a detailed cost estimate, provided that Contractor includes

applicable labor, equipment, materials and subcontracts, and allocates applicable indirect costs, contingencies and markup.

d. Bid documents provided by Owner should not be included in the Escrow Bid Documents unless needed to comply with these requirements.

6. Submittal of Escrow Bid Documents.

a. Submit Escrow Bid Documents in a container clearly marked on the outside with Contractor's name, date of submittal, Project name and the words "Escrow Bid Documents - Open only in the presence of Authorized Representatives of both Owner and Contractor." Owner will review the Escrow Bid Documents for initial compliance. Owner has three Days after receipt of Bidder's Escrow Bid Documents to demand additional information.

b. By submitting Escrow Bid Documents, Contractor represents that the material in the Escrow Bid Documents constitutes all the documentary information used in preparation of the Bid and that Contractor has personally examined the contents of the Escrow Bid Documents container and has found that the documents in the container are complete. Contractor agrees that it will not introduce or rely on any other documents to prove how it prepared its Bid.

c. If Contractor's Bid is based upon subcontracting any part of the Work, each Subcontractor whose total subcontract price exceeds five percent of the total Contract Sum proposed by Contractor, shall provide separate Escrow Documents to be included with those of Contractor. Such documents shall be opened and examined in the same manner and at the same time as the examination described above for Contractor.

d. If Contractor wishes to subcontract any portion of the Work after award, Owner retains the right to require Contractor to submit Escrow Documents for the Subcontractor before approval of the subcontract.

7. Storage, Examination, and Final Disposition of Escrow Bid Documents.

a. The Escrow Bid Documents will be placed in escrow until Final Completion of Work on the Project, in a mutually agreeable institution. Contractor shall pay the cost of storage for the Escrow Bid Documents until that time. The storage facilities shall be the appropriate size for all the Escrow Bid Documents and located conveniently to both Owner's and, to the extent reasonably possible, Contractor's offices, but in no event outside the County of Sonoma.

b. Both Owner and Contractor shall examine the Escrow Bid Documents, at any time deemed necessary by either Owner or Contractor, to assist in the negotiation of price adjustments and Change Orders or the settlement of disputes and claims. Examination of the Escrow Bid Documents is subject to the following conditions:

i. As trade secrets, the Escrow Bid Documents are proprietary and confidential under paragraph 3.b. of this Document 00670.

ii. Owner and Contractor (and any Subcontractor, to the extent Escrow Bid Documents are required by a Subcontractor) shall each designate in writing to the other party(s) at least seven Days prior to any examination, representatives who are authorized to examine the Escrow Bid Documents. Except as otherwise provided in a court order, no other persons shall have access to the Escrow Documents.

iii. Except as otherwise provided in a court order, access to the documents may take place only in the presence of duly designated representatives of both Owner and Contractor. If Contractor fails to designate a representative or appear for joint examination on seven Days' notice, then Owner's Representative may examine the Escrow Bid Documents upon an additional three Days' notice.

iv. Following Final Completion of Work on the Project and achievement of final settlement, Owner shall direct the escrow agent holding the Escrow Bid Documents in writing to return those documents to Contractor.

END OF DOCUMENT

DOCUMENT 00680

ESCROW AGREEMENT FOR SECURITY DEPOSITS IN LIEU OF RETENTION
P.C.C. §22300

THIS ESCROW AGREEMENT ("Escrow Agreement") is made and entered into this _____ [date] day of _____ [month], _____ [year], by and between the SONOMA VALLEY COUNTY SANITATION DISTRICT, a local district of the State of California (hereinafter called the "Owner"), whose address is 404 Aviation Blvd., Santa Rosa, CA 95403-9019; _____ [name of Contractor] ("Contractor"), whose place of business is located at _____ [Contractor's Address]; and [Owner, as escrow agent …OR… _____ [Name of Bank], a state or federally chartered bank in the State of California, whose place of business is located at _____] ("Escrow Agent").

For the consideration hereinafter set forth, Owner, Contractor and Escrow Agent agree as follows:

1. Pursuant to Section 22300 of Public Contract Code of the State of California, Contractor has the option to deposit securities with Escrow Agent as a substitute for retention earnings required to be withheld by Owner pursuant to Contract Number 70-12-7 #45 entered into between Owner and Contractor for North Bay Water Reuse Program - Sonoma Valley Effluent Reservoir R5 in the amount of _____ [Contract Sum] dated _____ [Date of Contract] (the "Contract"). Alternatively, on written request of Contractor, Owner shall make payments of the retention earnings directly to Escrow Agent. When Contractor deposits the securities as a substitute for Contract earnings, Escrow Agent shall notify Owner within ten Days of the deposit. The market value of the securities at the time of substitution shall be at least equal to the cash amount then required to be withheld as retention under terms of Contract between Owner and Contractor. Securities shall be held in name of _____, and shall designate Contractor as the beneficial owner.

2. Owner shall make progress payments to Contractor for those funds which otherwise would be withheld from progress payments pursuant to Contract provisions, provided that Escrow Agent holds securities in form and amount specified in paragraph 1 of this Document 00680.

3. When Owner makes payment(s) of retention earned directly to Escrow Agent, Escrow Agent shall hold said payment(s) for the benefit of Contractor until the time that the escrow created under this Escrow Agreement is terminated. Contractor may direct the investment of the payments into securities. All terms and conditions of this Escrow Agreement and the rights and responsibilities of the parties shall be equally applicable and binding when Owner pays Escrow Agent directly.

4. Contractor shall be responsible for paying all fees for the expenses incurred by Escrow Agent in administering the Escrow Account, and all expenses of Owner. Such expenses and payment terms shall be determined by Owner, Contractor, and Escrow Agent.

5. Interest earned on securities or money market accounts held in escrow and all interest earned on that interest shall be for sole account of Contractor and shall be subject to withdrawal by Contractor at any time and from time to time without notice to Owner.

6. Contractor shall have the right to withdraw all or any part of the principal in the Escrow Account only by written notice to Escrow Agent accompanied by written authorization from Owner to Escrow Agent that Owner consents to withdrawal of amount sought to be withdrawn by Contractor.

7. Owner shall have the right to draw upon the securities in event of default by Contractor. Upon seven Days written notice to Escrow Agent from Owner of the default, Escrow Agent shall immediately convert the securities to cash and shall distribute the cash as instructed by Owner.

8. Upon receipt of written notification from Owner certifying that the Contract is final and complete, and that Contractor has complied with all requirements and procedures applicable to the Contract, Escrow Agent shall release to Contractor all securities and interest on deposit less escrow fees and charges of the Escrow Account. The escrow shall be closed immediately upon disbursement of all moneys and securities on deposit and payments of fees and charges.

9. Escrow Agent shall rely on written notifications from Owner and Contractor pursuant to paragraphs 5 through 8, inclusive, of this Document 00680 and Owner and Contractor shall hold Escrow Agent harmless from Escrow Agent's release and disbursement of securities and interest as set forth.

10. Names of persons who are authorized to give written notice or to receive written notice on behalf of Owner and on behalf of Contractor in connection with the foregoing, and exemplars of their respective signatures are as follows:

On behalf of Owner:

General Manager
Title
Grant Davis
Name

Signature
404 Aviation Boulevard
Address
Santa Rosa, CA 95403
City/State/Zip

On behalf of Contractor:

Title

Name

Signature

Address

City/State/Zip

On behalf of Escrow Agent:

Title

Name

Signature

Address

City/State/Zip

At the time the Escrow Account is opened, Owner and Contractor shall deliver to Escrow Agent a fully executed counterpart of this Document 00680.

/
/
/
/
/
/
/
/
/
/

IN WITNESS WHEREOF, the parties have executed this Escrow Agreement by their proper officers on the date first set forth above.

Owner

_____

_____
Title

_____
Name

_____
Signature

Contractor

_____

_____
Title

_____
Name

_____
Signature

Escrow Agent

_____

_____
Title

_____
Name

_____
Signature

REVIEWED AS TO FORM:

_____
County Counsel

_____
Date

END OF DOCUMENT

CONDITIONS OF THE CONTRACT

DOCUMENT 00700

GENERAL CONDITIONS

STANDARD EDITION

TABLE OF CONTENTS

1. GENERAL 1

1.1 Documents 1
1.2 Exercise Of Contract Responsibilities 1
1.3 Defined Terms 1

2. BIDDING 1

2.1 Investigation Prior To Bidding 1
2.2 Subcontractors 2

3. CONTRACT AWARD AND COMMENCEMENT OF THE WORK 3

3.1 Award Of Contract 3
3.2 Commencement Of Work 3

4. BONDS AND INSURANCE 3

4.1 Bonds 3
4.2 Insurance 3

5. DRAWINGS AND SPECIFICATIONS 3

5.1 Intent 3
5.2 Drawing Details 4
5.3 Interpretation Of Drawings And Specifications 4
5.4 Checking Of Drawings 5
5.5 Standards To Apply Where Specifications Are Not Furnished 5
5.6 Deviation from Specifications and Drawings 5
5.7 Precedence Of Documents 6
5.8 Ownership And Use Of Drawings, Specifications And Contract Documents 6

6. CONSTRUCTION BY OWNER OR BY SEPARATE CONTRACTORS 6

6.1 Owner's Right To Perform Construction And To Award Separate Contracts 6
6.2 Mutual Responsibility 6
6.3 Owner Authority Over Coordination 7

7. OWNER AND PAYMENT 8

7.1 Owner's Representative(s) 8
7.2 Means And Methods Of Construction 8
7.3 Receipt And Processing Of Applications For Payment 8

8. CONTROL OF THE WORK 8

8.1 Supervision Of Work By Contractor 8
8.2 Observation Of Work By Owner 9
8.3 Access To Work 9

8.4 Existing Utilities Shown or Indicated In Contract Documents 10
8.5 Protection of Underground Facilities When Digging Trenches Or During Excavation....11

9. WARRANTY, GUARANTY, AND INSPECTION OF WORK 12

9.1 Warranty And Guaranty 12
9.2 Inspection Of Work 13
9.3 Correction Of Defective Work 15
9.4 Acceptance And Correction Of Defective Work By Owner 16
9.5 Rights Upon Inspection, Correction, Or Acceptance 16
9.6 Proof Of Compliance Of Contract Provisions 17

10. CONTRACTOR'S ORGANIZATION AND EQUIPMENT 17

10.1 Contractor's Legal Address 17
10.2 Contractor's Office At The Work Site 17
10.3 Contractor's Superintendents Or Forepersons 17
10.4 Proficiency In English 18
10.5 Contractor's And Subcontractors' Employees 18
10.6 Contractor To Supply Sufficient Workers And Materials 18
10.7 Contractor To List Trades Working 19
10.8 Contractor's Use Of The Site 19
10.9 Apprenticeship Program 19

11. PROSECUTION AND PROGRESS OF THE WORK 20

11.1 Schedules And Examinations Of Contract Documents 20
11.2 Cost Data 21

12. CLAIMS BY CONTRACTOR 22

12.1 General 22
12.2 Procedure 23
12.3 Claim Format 24
12.4 Mediation 24
12.5 Subcontractor Claims 24
12.6 Exclusive Remedy 25
12.7 Final Claim Disposition 25

13. LEGAL AND MISCELLANEOUS 25

13.1 Laws And Regulations 25
13.2 Permits And Taxes 26
13.3 Responsibility Of Contractor And Indemnification 26
13.4 Concealed Or Unknown Conditions 27
13.5 Notice Of Hazardous Waste Or Materials Conditions 28
13.6 Suspension Of Work 29
13.7 Termination Of Contract For Cause 29
13.8 Termination Of Contract For Convenience 31
13.9 Contingent Assignment Of Subcontracts 33
13.10 Remedies and Contract Integration 34
13.11 Patents 35
13.12 Substitution For Patented And Specified Articles 35
13.13 Interest Of Public Officers 35

13.14 Limit Of Liability 35

14. MODIFICATIONS OF CONTRACT DOCUMENTS....36

14.1 Alterations, Modifications And Force Account Work 36

15. TIME ALLOWANCES....37

15.1 Time Allowances For Performance Of Contract Documents....37
15.2 Entitlement to Change Of Contract Time 37
15.3 Weather-Related Delays....38
15.4 Notice Of Delay 39
15.5 Time Extensions And/Or Compensation Entitlement For Delays 39
15.6 Liquidated Damages....40

16. WORKING CONDITIONS AND PREVAILING WAGES 40

16.1 Use Of Site/Sanitary Rules 40
16.2 Protection Of Work, Persons, And Property 41
16.3 Responsibility For Safety And Health....42
16.4 Emergencies 42
16.5 Use Of Roadways And Walkways....42
16.6 Nondiscrimination 43
16.7 Prevailing Wages....43
16.8 Environmental Controls 44
16.9 Shoring Safety Plan 44

GENERAL CONDITIONS

1. GENERAL

1.1 Documents

1.1.A. Contract Documents are complementary; what is called for by one is as binding as if called for by all. Contract Documents shall not be construed to create a contractual relationship of any kind between (1) Engineer or any Owner's Representative and Contractor; (2) Owner and/or its representatives and a Subcontractor, sub-Subcontractor, or supplier of any Project labor, materials, or equipment; or (3) between any persons or entities other than Owner and Contractor. Owner shall be deemed to be an intended third-party beneficiary of each agreement referenced in clause (2) above, and each such agreement shall so provide. Contractor is fully responsible for Contractor's own acts and omissions. Contractor is responsible for all acts and omissions of its Subcontractors, suppliers, and other persons and organizations performing or furnishing any of the Work, labor, materials, or equipment under a direct or indirect contract with Contractor.

1.2 Exercise Of Contract Responsibilities

1.2.A. In exercising its responsibilities and authorities under the Contract Documents, Owner does not assume any duties or responsibilities to any Subcontractor or supplier and does not assume any duty of care to Contractor, Contractor's Subcontractors or suppliers. Except as expressly set forth in the Contract Documents, in exercising their respective responsibilities and authorities under the Contract Documents, neither Engineer nor any Owner's Representative assumes any duties or responsibilities to any Subcontractor, sub-Subcontractor or supplier nor assumes any duty of care to Contractor or any Subcontractor, sub-Subcontractor or suppliers.

1.3 Defined Terms

1.3.A. All abbreviations and definitions of terms used and not otherwise defined in this Document 00700 are set forth in Section 01420 (References and Definitions). This Document 00700 subdivides at first level into Articles, and then into paragraphs.

2. BIDDING

2.1 Investigation Prior To Bidding

2.1.A. Prior to bidding, Bidders shall perform the work, investigations, research and analysis required by Article 5 of Document 00520 (Agreement). Under the Contract Documents, Contractor is charged with all information and knowledge that a reasonable Bidder would ascertain from having performed the required work, investigations, research, and analysis. Bid prices shall include entire cost of all "incidental work" to complete the Work, as that term is defined in Article 5 of this Document 00700.

2.1.B. Conditions Shown on Contract Documents: Information as to underground conditions, as-built conditions, or other conditions or obstructions indicated in the Contract Documents, *e.g.*, on Drawings or in Specifications, has been obtained with reasonable care, and has been recorded in good faith. Owner warrants, and Contractor may rely on, the accuracy of only limited types of information as discussed below.

1. Aboveground and As-Built Conditions: There is no express or implied warranty and no express or implied representation that any information as to aboveground conditions or as-built conditions indicated in the Contract Documents is correctly shown, or indicated, or complete. As a condition to bidding, Contractor shall verify by independent investigation all aboveground and as-built conditions. In submitting its Bid, Contractor shall rely on the results of its own independent investigation and shall not rely on Owner-supplied information regarding aboveground conditions and as-built conditions.
2. Subsurface Conditions: Contractor may rely only upon the general accuracy of actual reported depths, actual reported character of materials, actual reported soil types, actual reported water conditions, or actual obstructions shown or indicated in the Contract Documents. Owner is not responsible for (1) the completeness of any subsurface condition information for bidding or construction, (2) Contractor's conclusions or opinions drawn from any subsurface condition information, or (3) subsurface conditions that are not specifically shown. (For example, Owner is not responsible for soil conditions in areas contiguous to areas where a subsurface condition is shown.)
3. Conditions Shown in Reports and Drawings Supplied for Informational Purposes: Reference is made to Document 00320 (Geotechnical Data and Existing Conditions) for identification of geotechnical reports, "as-built" information, and other drawings or other documents describing physical conditions in or relating to existing surface or subsurface conditions or structures at or contiguous to the Site. These materials are not Contract Documents and, except for any "technical data" regarding subsurface conditions specifically identified in Document 00320 (Geotechnical Data and Existing Conditions), and "Underground Facilities" data, as limited in Document 00320 (Geotechnical Data and Existing Conditions), Contractor shall not in any manner rely on the information in these materials. Subject to the foregoing, Contractor shall make its own independent investigation of all conditions affecting the Work and must not rely on information provided by Owner.

2.2 Subcontractors

2.2.A. Consistent with Public Contract Code Sections 4101 *et seq.*, Contractor shall not substitute any other person or firm in place of any Subcontractor listed in the Bid. Subcontractors shall not assign or transfer their subcontracts or permit them to be performed by any other contractor without Owner's written approval. At Owner's request, Contractor shall provide Owner with a complete copy of all executed subcontracts or final commercial agreements with Subcontractors and/or suppliers.

2.2.B. Subcontract agreements shall preserve and protect the rights of Owner under the Contract Documents so that subcontracting will not prejudice such rights. To the extent of the Work to be performed by a Subcontractor, Contractor shall require the Subcontractor's written agreement (1) to be bound to the terms of Contract Documents and (2) to assume vis-à-vis Contractor all the obligations and responsibilities that Contractor assumes toward Owner under the Contract Documents. (These agreements include for example, and not by way of limitation, all warranties, claims procedures and rules governing submittals of all types to which Contractor is subject under the Contract Documents.)

2.2.C. Contractor shall provide for the assignment to Owner of all rights any Subcontractor may have against any manufacturer, supplier, or distributor for breach of warranties and guarantees relating to the Work performed by the Subcontractor under the Contract Documents.

3. CONTRACT AWARD AND COMMENCEMENT OF THE WORK

3.1 Award Of Contract

3.1.A. Owner will make the Award of Contract by issuing a Notice of Award. As a condition to Owner signing Document 00520 (Agreement), however, Contractor shall deliver to Owner the executed agreements, forms, bonds, and insurance documents required by Document 00200 (Instructions to Bidders) in the required quantities and within the required times.

3.2 Commencement Of Work

3.2.A. The Contract Time will commence to run on the 60th Day after the issuance of the Notice of Award or, if a Notice to Proceed is given, on the date indicated in the Notice to Proceed. See also paragraph 15.1.B of this Document 00700. Owner may give a Notice to Proceed at any time within 60 Days after the Notice of Award. Contractor shall not do any Work at the Site prior to the date on which the Contract Time commences to run.

4. BONDS AND INSURANCE

4.1 Bonds

4.1.A. At or before the date indicated in Document 00200 (Instructions to Bidders), Contractor shall file with Owner the following bonds:

1. Corporate surety bond, in the form of Document 00610 (Construction Performance Bond), in the penal sum of 100% of the Contractor's Bid as accepted, to guarantee faithful performance of the Work; and
2. Corporate surety bond, in the form of Document 00620 (Construction Labor and Material Payment Bond), in the penal sum of 100% of the Contractor's Bid as accepted, to guarantee payment of wages for services engaged and of bills contracted for materials, supplies, and equipment used in performance of Contract Documents.

4.1.B. Sureties shall be satisfactory to Owner. Corporate sureties on these bonds and on bonds accompanying Bids shall be duly licensed to do business in the State of California and shall have an A.M. Best Company financial rating of A or better.

4.2 Insurance

4.2.A. See paragraph 2.A of Document 00800 (Supplementary Conditions), incorporated herein by this reference.

5. DRAWINGS AND SPECIFICATIONS

5.1 Intent

5.1.A. Drawings and Specifications are intended to describe a functionally complete and operable Project (and all parts thereof) to be constructed in accordance with the requirements of Contract Documents. Contractor shall perform any work, provide

services and furnish any materials or equipment that may reasonably be inferred from the requirements of Contract Documents or from prevailing custom or trade usage as being required to produce this intended result. Contractor shall interpret words or phrases used to describe Work (including services), materials, or equipment that have well-known technical or construction industry or trade meaning in accordance with that meaning. Drawings' intent specifically includes the intent to depict construction that complies with all applicable laws, codes, and standards.

5.1.B. As part of the "Work," Contractor shall provide all labor, materials, equipment, machinery, tools, facilities, services, employee training and testing, hoisting facilities, Shop Drawings, storage, testing, security, transportation, disposal, the securing of all necessary or required field dimensions, the cutting or patching of existing materials, notices, permits, documents, reports, agreements, and any other items required or necessary to timely and fully complete Work described and the results intended by Contract Documents and, in particular, Drawings and Specifications. Divisions and Specification Sections and the identification on any Drawings shall not control Contractor in dividing Work among Subcontractors or suppliers or delineating the Work to be performed by any specific trade.

5.1.C. Contractor shall perform reasonably implied parts of Work as "incidental work" although absent from Drawings and Specifications. Incidental work includes any work not shown on Drawings or described in Specifications that is necessary or normally or customarily required as a part of the Work shown on Drawings or described in Specifications. Incidental work includes any work necessary or required to make each installation satisfactory, legally operable, functional, and consistent with the intent of Drawings and Specifications or the requirements of Contract Documents including required tasks to be performed under Division 1 of Specifications. Contractor shall perform incidental work without extra cost to Owner. Incidental work shall be treated as if fully described in Specifications and shown on Drawings, and the expense of incidental work shall be included in price Bid and Contract Sum.

5.2 Drawing Details

5.2.A. A typical or representative detail on Drawings shall constitute the standard for workmanship and material throughout corresponding parts of Work. Where necessary, and where reasonably inferable from Drawings, Contractor shall adapt such representative detail for application to such corresponding parts of Work. The details of such adaptation shall be subject to prior approval by Owner. Repetitive features shown in outline on Drawings shall be in exact accordance with corresponding features completely shown.

5.3 Interpretation Of Drawings And Specifications

5.3.A. Should any discrepancy appear or any misunderstanding arise as to the import of anything contained in Drawings and Specifications, or should Contractor have any questions or requests relating to Drawings or Specifications, Contractor shall refer the matter to Owner, in writing. Owner will issue with reasonable promptness written responses, clarifications or interpretations as Owner may determine necessary, which shall be consistent with the intent of and be reasonably inferable from Contract Documents. Such written clarifications or interpretations shall be binding upon Contractor. If Contractor believes that a written response, clarification or interpretation justifies an adjustment in the Contract Sum or Contract Time, Contractor shall give

Owner prompt written notice as provided in Section 01250 (Modification Procedures). If the parties are unable to agree to the amount or extent of the adjustment, if any, then Contractor shall perform the Work in conformance with Owner's response, clarification, or interpretation and may make a written claim for the adjustment as provided in Article 12 of this Document 00700.

5.4 Checking Of Drawings

5.4.A. Before undertaking each part of Work, Contractor shall carefully study and compare Contract Documents and check and verify pertinent figures shown in the Contract Documents and all applicable field measurements. Contractor shall be responsible for any errors that might have been avoided by such comparison. Figures shown on Drawings shall be followed; Contractor shall not scale measurements. Contractor shall promptly report to Owner, in writing, any conflict, error, ambiguity or discrepancy that Contractor may discover. Contractor shall obtain a written interpretation or clarification from Owner before proceeding with any Work affected thereby. Contractor shall provide Owner with a follow-up correspondence every ten Days until it receives a satisfactory interpretation or clarification.

5.5 Standards To Apply Where Specifications Are Not Furnished

5.5.A. The following general specifications shall apply wherever in the Specifications, or in any directions given by Owner in accordance with or supplementing Specifications, it is provided that Contractor shall furnish materials or manufactured articles or shall do Work for which no detailed specifications are shown. Materials or manufactured articles shall be of the best grade, in quality and workmanship, obtainable in the market from firms of established good reputation. If not ordinarily carried in stock, the materials or manufactured articles shall conform to industry standards for first-class materials or articles of the kind required, with due consideration of the use to which they are to be put. Work shall conform to the usual standards or codes, such as those cited in Section 01420 (References and Definitions), for first-class work of the kind required. Contractor shall specify in writing to Owner the materials to be used or Work to be performed under this paragraph 5.5 ten Business Days prior to furnishing such materials or performing such Work.

5.6 Deviation from Specifications and Drawings

5.6.A. Contractor shall perform Work in accordance with Drawings and Specifications. Contractor may deviate from Drawings or the dimensions given in the Drawings, and may deviate from the Specifications, only upon Owner's advance written approval of the proposed deviation. If Work requires a Submittal prior to commencement, then Contractor's performance of such Work prior to Submittal being favorably reviewed shall be at Contractor's sole risk.

5.6.B. Owner may order that locations, lines, and grades for Work vary from those shown on Drawings. Changes may be made in locations, lines, or grades for Work under any item of Contract Documents. No payment in addition to unit price fixed in the Contract Documents for Work under respective items will be allowed on account of variations from Drawings in unit price items. In lump sum contracts, or where there are no unit price items covering Work affected by variations of locations, lines, or grades, all changes in the Contract Documents will be made as set forth in Article 14 of this Document 00700.

5.7 Precedence Of Documents

5.7.A. In the case of discrepancy or ambiguity in the Contract Documents, the following order of precedence shall prevail:

1. Modifications in inverse chronological order (i.e., most recent first), and in the same order as specific portions they are modifying;
2. Document 00520 (Agreement), and terms and conditions referenced therein;
3. Document 00800 (Supplementary Conditions) and Document 00805 (Supplementary Conditions – Hazardous Materials);
4. Document 00700 (General Conditions);
5. Division 1 Specifications;
6. Drawings and Division 2 through 16 Specifications;
7. Written numbers over figures, unless obviously incorrect;
8. Figured dimensions over scaled dimensions;
9. Large-scale Drawings over small-scale Drawings.

5.7.B. Any conflict between Drawings and Division 2 through 16 Specifications will be resolved in favor of the document of the latest date (i.e., the most recent document), and if the dates are the same or not determinable, then in favor of Specifications.

5.7.C. Any conflict between a bill or list of materials shown in the Contract Documents and the actual quantities required to complete Work required by Contract Documents, will be resolved in favor of the actual quantities.

5.7.D. In the event the Specifications include divisions above Division 16 (e.g., Division 17 and above), then such divisions shall be included within the Contract Documents unless identified otherwise.

5.8 Ownership And Use Of Drawings, Specifications And Contract Documents

5.8.A. Drawings, Specifications, and other Contract Documents were prepared for use for Work of Contract Documents only. No part of Contract Documents shall be used for any other construction or for any other purpose except with the written consent of Owner. Any unauthorized use of Contract Documents is prohibited and at the sole liability of the user.

6. CONSTRUCTION BY OWNER OR BY SEPARATE CONTRACTORS

6.1 Owner's Right To Perform Construction And To Award Separate Contracts

6.1.A. Owner may perform with its own forces, construction or operations related to the Project. Owner may also award separate contracts in connection with other portions of the Project or other construction or operations, on the Site or areas contiguous to the Site, under conditions similar to these Contract Documents, or may have utility owners perform other work. When separate contracts are awarded for different portions of the Project or other construction or operations on the Site, the term "Contractor" in these Contract Documents shall mean the Contractor herein.

6.2 Mutual Responsibility

6.2.A. Contractor shall afford all other contractors, utility owners, and Owner (if Owner is performing work with its own forces), proper and safe access to the Site, and reasonable opportunity for the installation and storage of their materials. Contractor shall ensure that the execution of its Work properly connects and coordinates with others' work, and shall cooperate with them to facilitate the progress of the Work.

6.2.B. Contractor shall coordinate its Work with the work of other separate contractors, Owner, and utility owners. Contractor shall hold coordination meetings with other contractors, Owner and its representatives, and utility owners as required by Section 01315 (Project Meetings).

6.2.C. Unless otherwise provided in the Contract Documents, Contractor shall do all cutting, fitting, and patching of the Work that may be required to make its several parts come together properly and integrate with such other work. Contractor shall not endanger any work of other separate contractors, Owner, or utility owners by cutting, excavating, or otherwise altering their work and will only cut or alter their work with the written consent of Owner and the others whose work will be affected.

6.2.D. Contractor's duties and responsibilities under paragraph 6.2.A of this Document 00700 are for the benefit of Owner and also for the benefit of such other contractors and utility owners working at the Site to the extent that there are comparable provisions for the benefit of Contractor in the direct contracts between Owner and such other contractors and utility owners.

6.2.E. To the extent that any part of Contractor's Work is to interface with work performed or installed by other contractors or utility owners, Contractor shall inspect and measure the in-place work. Contractor shall promptly report to Owner in writing any defect in in-place work that will impede or increase the cost of Contractor's interface unless corrected. Owner will require the contractor responsible for the Defective Work to make corrections so as to conform to its contract requirements, or, if the defect is the result of an error or omission in the Contract Documents, issue a Change Order. If Contractor fails to measure, inspect and/or report to Owner in writing defects that are reasonably discoverable, Contractor shall bear all costs of accomplishing the interface acceptable to Owner. This provision shall be included in any and all other contracts or subcontracts for Work to be performed where such a conflict could exist.

6.3 Owner Authority Over Coordination

6.3.A. Owner will have authority over coordination of the activities of multiple contractors in cases where Owner performs Work with its own forces or contracts with others for the performance of other Work on the Project, or utilities Work on the Site. Owner may at any time and in its sole discretion, designate a person or entity other than Owner to have authority over the coordination of the activities among the various contractors. Owner's authority with respect to coordination of the activities of multiple contractors and utility owners shall not relieve Contractor of its obligation to other contractors and utility owners to coordinate its Work with other contractors and utility owners as specified in paragraph 6.2 of this Document 00700. Contractor shall promptly notify Owner in writing when another contractor on the Project fails to coordinate its work with the Work of Contract Documents.

6.3.B. Contractor shall suspend any part of the Work or carry on the same in such manner as directed by Owner when such suspension or prosecution is necessary to facilitate the work of other contractors or workers. No damages or claims by Contractor will be allowed if the suspension or Work change is due in whole or in part to Contractor's failure to perform its obligation to coordinate its Work with other contractors and utility owners. Damages or claims will be allowed only to the extent of fault by Owner if the suspension or Work change is due in whole or in part to another contractor's failure to coordinate its work with Contractor, other contractors, and utility owners.

Owner reserves the right to back charge Contractor for any damages or claims incurred by other contractors as a result of Contractor's failure to perform its obligations to coordinate with other contractors and utility owners. Owner may deposit the funds retained with a Court of competent jurisdiction pursuant to applicable interpleader procedures and Contractor releases Owner of further liability regarding such funds.

7. OWNER AND PAYMENT

7.1 Owner's Representative(s)

7.1.A. Owner's Representative(s) will have limited authority to act on behalf of Owner as set forth in the Contract Documents. Except as otherwise provided in these Contract Documents or subsequently identified in writing by Owner, Owner will issue all communications to Contractor through Owner's Representative, and Contractor shall issue all communications to Owner through Owner's Representative in a written document delivered to Owner. Should any direct communications between Contractor and Owner's consultants, architects, or engineers not identified in Article 2 of Document 00520 (Agreement) occur during field visits or by telephone, Contractor shall immediately confirm them in a written document copied to Owner.

7.2 Means And Methods Of Construction

7.2.A. Subject to those rights specifically reserved in the Contract Documents, Owner will not supervise, or direct, or have control over, or be responsible for, Contractor's means, methods, techniques, sequences or procedures of construction, or the safety precautions and programs incident thereto, or Contractor's failure to comply with laws and regulations applicable to the furnishing or performance of Work. Owner will not be responsible for Contractor's failure to perform or furnish the Work in accordance with Contract Documents.

7.3 Receipt And Processing Of Applications For Payment

7.3.A. As required by Section 01200 (Price and Payment Procedures), Contractor shall prepare the schedules, submit Applications for Payment and warrant title to all Work covered by each Application for Payment. Owner will review Contractor's Applications for Payment and make payment thereon, and Contractor shall make payments to Subcontractors, suppliers, and others, as required by Section 01200 (Price and Payment Procedures).

8. CONTROL OF THE WORK

8.1 Supervision Of Work By Contractor

8.1.A. Contractor shall supervise, inspect, and direct Work competently and efficiently, devoting the attention and applying such personal skills and expertise as may be required and necessary to perform Work in accordance with Contract Documents. Contractor shall be solely responsible for and have control and charge of construction means, methods, techniques, sequences and procedures, safety precautions, and programs in connection with the Work. Contractor shall be responsible to see that the completed Work complies accurately with Contract Documents.

8.1.B. Contractor shall keep on the Site at all times during Work progress a competent resident Superintendent, who shall not be replaced without Owner's express written consent. The Superintendent shall be Contractor's representative at the Site and shall

have complete authority to act on behalf of Contractor. All communications to and from the Superintendent shall be as binding as if given to or by Contractor.

8.2 Observation Of Work By Owner

8.2.A. Work shall be performed under Owner's general observation and administration. Contractor shall comply with Owner's directions and instructions in accordance with the terms of Contract Documents, but nothing contained in these General Conditions shall be taken to relieve Contractor of any obligations or liabilities under the Contract Documents. Owner's failure to review or, upon review, failure to object to any aspect of Work reviewed, shall not be deemed a waiver or approval of any non-conforming aspect of Work.

8.2.B. Owner may engage an independent consultant or engineer (collectively for purposes of this paragraph 8.2, "Engineer") to assist in administering the Work. If so engaged, Engineer will advise and consult with Owner, but will have authority to act on behalf of Owner only to extent provided in the Contract Documents or as set forth in writing by Owner. Engineer will not be responsible for and will not have control or charge of construction means, methods, techniques, sequences or procedures, or for safety precautions and programs in connection with Work. Engineer will not be responsible for or have control over the acts or omissions of Contractor, Subcontractors or their agents or employees, or any other persons performing Work.

8.2.C. Engineer may review Contractor's Submittals, such as Shop Drawings, Product Data, and Samples, but only for conformance with design concept of Work and with information given in the Contract Documents.

8.2.D. Engineer may visit the Site at intervals appropriate to stage of construction to become familiar generally with the progress and quality of Work and to determine in general if Work is proceeding in accordance with Contract Documents. Based on its observations, Engineer may recommend to Owner that it disapprove or reject Work that Engineer believes to be Defective or will not produce a complete Project that conforms to Contract Documents or will prejudice the integrity of the design concept of the completed Project as a functioning whole as indicated by Contract Documents. Owner will also have authority to require special inspection or testing of Work, whether or not the Work is fabricated, installed, or completed.

8.2.E. Engineer may conduct inspections to recommend to Owner the dates that Contractor has achieved Substantial Completion and Final Acceptance, and will receive and forward to Owner for review written warranties and related documents required by Contract Documents.

8.3 Access To Work

8.3.A. During performance of Work, Owner and its agents, consultants, and employees may at any time enter upon Work, shops, or studios where any part of the Work may be in preparation, or factories where any materials for use in Work are being or are to be manufactured, and Contractor shall provide proper and safe facilities for this purpose, and shall make arrangements with manufacturers to facilitate inspection of their processes and products to such extent as Owner's interests may require. Other contractors performing work for Owner may also enter upon Work for all purposes required by their respective contracts. Subject to the rights reserved in the Contract Documents, Contractor shall have sole care, custody, and control of the Site and its Work areas.

8.4 Existing Utilities Shown or Indicated In Contract Documents

8.4.A. Drawings or Specifications may indicate above- and below-grade structures, drainage lines, storm drains, sewers, water, gas, electrical, chemical, hot water, and other similar items and utilities, and additional information may be on file at the Common Ground Alliance, 811. Contractor shall locate these known existing installations before proceeding with trenching or other operations that may cause damage, shall maintain them in service where appropriate, and shall repair any damage to them caused by the Work, at no increase in Contract Sum. Additional utilities whose locations are unknown to Owner are suspected to exist. Contractor shall be alert to their existence; if they are encountered, Contractor shall immediately report to Owner for disposition of the same. In addition to reporting if any utility is damaged, Contractor shall take appropriate action as provided in this Document 00700. Additional compensation or extension of time on account of utilities not shown or otherwise brought to Contractor's attention, including reasonable action taken to protect or repair damage, shall be determined as provided in this Document 00700.

8.4.B. At no additional cost to Owner, Contractor shall incorporate into the Work main or trunk line utilities identified in the Contract Documents and other utilities or underground structures known or reasonably discernible and that will remain in service, including reasonable adjustments to the design location (including minor relocations) of the existing or new installations. Contractor shall take immediate action to restore any in-service installations damaged by Contractor's operations. Should Owner determine that Contractor has not responded in a timely manner or not diligently pursued completion of the Work, Owner may restore service and deduct the costs of such action by Owner from the amounts due under the Contract.

8.4.C. Consistent with Government Code Section 4215, as between Owner and Contractor, Owner will be responsible for the timely removal, relocation, or protection of existing main or trunk line utility facilities located on the Site only if such utilities are not identified in the Contract Documents or Document 00320 (Geotechnical Data and Existing Conditions). Owner will compensate for the cost of locating and repairing damage not due to Contractor's failure to exercise reasonable care, removing and relocating such main or trunk line utility facilities not indicated in the Contract Documents or Document 00320 (Geotechnical Data and Existing Conditions) with reasonable accuracy, and equipment on the Project necessarily idled during such Work.

8.4.D. Prior to performing Work at the Site, Contractor shall lay out the locations of known underground utilities that are to remain in service and other significant known underground installations. At no additional cost to Owner, prior to commencing other Work in proximity to such known underground utilities or installations that can be readily inferred from adjacent surface improvements, Contractor shall further locate, by carefully excavating with small equipment, potholing, and principally by hand, such utilities or installations that are to remain and that are subject to damage. This obligation applies to all utilities (including, but not limited to, those referenced in paragraph 8.4.C of this Document 00700).

8.4.E. Nothing in this Document 00700 shall be deemed to require Owner to indicate the presence of existing service laterals or appurtenances whenever the presence of such utilities on the Site can be inferred by Contractor from the presence of an underground transmission main or other visible facilities, such as buildings, new asphalt, meters,

and junction boxes, on or adjacent to the Site. Contractor shall immediately secure all available information and notify Owner and utility, in writing, of its discovery, while performing Work under the Contract Documents, of any utility facilities not identified in the Drawings and Specifications.

8.5 Protection of Underground Facilities When Digging Trenches Or During Excavation

8.5.A. Before commencing Work of digging trenches or excavation, Contractor shall review all information available regarding subsurface conditions, including but not limited to information supplied in Document 00320 (Geotechnical Data and Existing Conditions), and subject to the terms and conditions of these documents, Contractor shall also comply with Government Code Sections 4216 to 4216.9, and in particular Section 4216.2 which provides, in part:

> Except in an emergency, every person planning to conduct any excavation shall contact the appropriate regional notification center at least two working days, but no more than 14 calendar days, prior to commencing that excavation, if the excavation will be conducted in an area which is known, or reasonably should be known, to contain subsurface installations other than the underground facilities owned or operated by the excavator, and, if practical, the excavator shall delineate with white paint or other suitable markings the area to be excavated. The regional notification center shall provide an inquiry identification number to the person who contacts the center and shall notify any member, if known, who has a subsurface installation in the area of the proposed excavation.

8.5.B. Contractor shall contact Common Ground Alliance, telephone 811, and schedule the Work to allow ample time for the center to notify its members and, if necessary, for any member to field locate and mark its facilities. Contractor is charged with knowledge of all subsurface conditions reflected in 811 records. Prior to commencing excavation or trenching Work, Contractor shall provide Owner with copies of all 811 records secured by Contractor. Contractor shall advise Owner of any conflict between information provided in Document 00320 (Geotechnical Data and Existing Conditions), the Drawings and that provided by 811 records. Contractor's excavation shall be subject to and comply with the Contract Documents, including without limitation paragraphs 2.1 and 8.4 of this Document 00700.

8.5.C. If an Underground Facility is uncovered or revealed at or contiguous to the Site which was not shown or indicated in the materials supplied by Owner or in information on file at 811 or is otherwise reasonably available to Contractor, then Contractor shall, promptly after becoming aware thereof and before further disturbing conditions affected thereby (and in no event later than seven Days), and prior to performing any Work in connection therewith (except in an emergency as required by Article 16 of this Document 00700), identify the owner of such Underground Facility and give written notice to that owner and to Owner. During such time, Contractor shall be responsible for the safety and protection of such Underground Facility.

8.5.D. Contractor shall be allowed an increase in the Contract Sum or an extension of the Contract Time, or both, to the extent that they are attributable to the existence of any Underground Facility that is owned and was built by Owner only where the Underground Facility:

1. Was not shown or indicated in the Contract Documents or in the information supplied pursuant to Document 00320 (Geotechnical Data and Existing Conditions) or in information on file at 811; and
2. Contractor did not know of it; and
3. Contractor could not reasonably have been expected to be aware of it or to have anticipated it from the information available. (For example, if surface conditions such as pavement repairs, valve covers, or other markings, indicate the presence of an Underground Facility, then an increase in the Contract Sum or an extension of the Contract Time will not be due, even if the Underground Facility was not indicated in the Contract Documents, in the information supplied to Contractor pursuant to Document 00320 [Geotechnical Data and Existing Conditions], in information on file at 811, or otherwise reasonably available to Contractor.)

8.5.E. Contractor shall bear the risk that Underground Facilities not owned or built by Owner may differ in nature or locations shown in information made available by Owner pursuant to Document 00320 (Geotechnical Data and Existing Conditions), in information on file at 811, or otherwise reasonably available to Contractor. Underground Facilities are inherent in construction involving digging of trenches or other excavations and Contractor is to apply its skill and industry to verify the information available.

8.5.F. The cost of all of the following will be included in the Contract Sum and Contractor shall have full responsibility for (a) reviewing and checking all available information and data including, but not limited to, Document 00320 (Geotechnical Data and Existing Conditions) and information on file at 811; (b) locating all Underground Facilities shown or indicated in the Contract Documents, available information, or indicated by visual observation including, but not limited to, and by way of example only, engaging qualified locating services and all necessary backhoeing and potholing; (c) coordinating the Work with the owners of such Underground Facilities during construction; and (d) the safety and protection of all such Underground Facilities and repairing any damage thereto resulting from the Work.

9. WARRANTY, GUARANTY, AND INSPECTION OF WORK

9.1 Warranty And Guaranty

9.1.A. General Representations and Warranties: Contractor represents and warrants that it is and will be at all times fully qualified and capable of performing every Phase of the Work and to complete Work in accordance with the terms of Contract Documents. Contractor warrants that all construction services shall be performed in accordance with generally accepted professional standards of good and sound construction practices and all requirements of Contract Documents. Contractor warrants that Work, including but not limited to each item of materials and equipment incorporated therein, shall be new, of suitable grade of its respective kind for its intended use, and free from defects in design, engineering, materials, construction and workmanship. Contractor warrants that Work shall conform in all respects with all applicable requirements of federal, state and local laws, applicable construction codes and standards, licenses, and permits, Drawings and Specifications and all descriptions set forth therein, and all other requirements of Contract Documents. Contractor shall not be responsible, however, for the negligence of others in the specification of specific

equipment, materials, design parameters and means or methods of construction where that is specifically shown and expressly required by Contract Documents.

9.1.B. Extended Guarantees: For any guarantee exceeding one year provided by the supplier or manufacturer of any equipment or materials used in the Project, Contractor shall extend its guarantee for such term. Contractor expressly agrees to act as co-guarantor of such equipment and materials and shall supply Owner with all warranty and guarantee documents relative to equipment and materials incorporated in the Project and guaranteed by their suppliers or manufacturers.

9.1.C. Environmental and Toxics Warranty: The covenants, warranties and representations contained in this paragraph 9.1.C. are effective continuously during Contractor's Work on the Project and following cessation of labor for any reason including, but not limited to, Project completion. Except as expressly shown in the Contract Documents, Contractor covenants, warrants and represents to Owner that:

1. To Contractor's knowledge after due inquiry, no lead or Asbestos-containing materials were installed or discovered in the Project at any time during Contractor's construction thereof. If any lead or Asbestos-containing materials were discovered, Contractor made immediate written disclosure to Owner.
2. To Contractor's knowledge after due inquiry, no electrical transformers, light fixtures with ballasts or other equipment containing PCBs were installed or discovered on the Project at any time during Contractor's construction thereof. If any such materials were discovered, Contractor made immediate written disclosure to Owner.
3. To Contractor's knowledge after due inquiry, no storage tanks for gasoline or any other toxic substance were installed or discovered on the Project at any time during Contractor's construction thereof. If any such materials were discovered, Contractor made immediate written disclosure to Owner.
4. Contractor's operations concerning the Project are and were not in violation of any applicable environmental federal, state, or local statute, law or regulation dealing with hazardous materials substances or toxic substances and no notice from any governmental body has been served upon Contractor claiming any violation of any such law, ordinance, code or regulation, or requiring or calling attention to the need for any Work, repairs, construction, alteration, or installation on or in connection with the Project in order to comply with any such laws, ordinances, codes, or regulations, with which Contractor has not complied. If there are any such notices with which Contractor has complied, Contractor shall provide Owner with copies thereof.

9.2 Inspection Of Work

9.2.A. All materials, equipment, and workmanship used in Work shall be subject to inspection and testing at all times during construction and/or manufacture in accordance with the terms of Contract Documents. Work and materials, and manufacture and preparation of materials, from beginning of construction until Final Completion and acceptance of Work, shall be subject to inspection and rejection by Owner, its agents, representatives or independent contractors retained by Owner to perform inspection services, or governmental agencies with jurisdictional interests. Contractor shall provide them proper and safe conditions for such access and advise them of Contractor's Site safety procedures and program so that they may comply therewith as applicable. Upon request or where specified, Owner shall be afforded

access for inspection at the source of supply, manufacture or assembly of any item of material or equipment, with reasonable accommodations supplied for making such inspections.

9.2.B. Contractor shall furnish, in such quantities and sizes as may be required for proper examination and tests, Samples or test specimens of all materials to be used or offered for use in connection with Work. Contractor shall prepare Samples or test specimens at its expense and furnish them to Owner. Contractor shall submit all Samples in ample time to enable Owner to make any necessary tests, examinations, or analyses before the time it is desired to incorporate the material into the Work.

9.2.C. Contractor shall give Owner timely notice of readiness of Work for all required inspections, tests or approvals, and shall cooperate with inspection and testing personnel to facilitate required inspections or tests.

9.2.D. If applicable laws or regulations of any public body having jurisdiction require any Work (or part thereof) specifically to be inspected, tested or approved by an employee or other representative of such public body, Contractor shall assume full responsibility for arranging and obtaining such inspections, tests or approvals, and furnish Owner with the required certificates of inspection, or approval. Owner will pay the cost of initial testing and Contractor shall pay all costs in connection with any follow-up or additional testing. Contractor shall also be responsible for arranging and obtaining and shall pay all costs in connection with any inspections, tests or approvals required for the acceptance of materials or equipment to be incorporated in the Work, or of materials, mix designs, or equipment submitted for approval prior to Contractor's purchase thereof for incorporation in the Work.

9.2.E. If Contractor covers any Work, or the work of others, prior to any required inspection, test or approval without written approval of Owner, Contractor shall uncover the Work at Owner's request. Contractor shall bear the expense of uncovering Work and replacing Work.

9.2.F. In any case where Contractor covers Work contrary to Owner's request, Contractor shall uncover Work for Owner's observation or inspection at Owner's request. Contractor shall bear the cost of uncovering Work.

9.2.G. Whenever required by Owner, Contractor shall furnish tools, labor and materials necessary to make examination of Work that may be completed or in progress, even to extent of uncovering or taking down portions of finished Work. Should Work be found unsatisfactory, cost of making examination and of reconstruction shall be borne by Contractor. If Work is found to be satisfactory, Owner, in manner herein prescribed for paying for alterations, Modifications, and extra Work, except as otherwise herein specified, will pay for examination.

9.2.H. Inspection of the Work by or on behalf of Owner, or Owner's failure to do so, shall not under any circumstances be deemed a waiver or approval of any non-conforming aspect of the Work. Contractor shall have an absolute duty, in the absence of a written Change Order signed by Owner, to perform Work in conformance with the Contract Documents and to correct Defective Work immediately upon Contractor's knowledge.

9.2.I. Any inspection, evaluation, or test performed by or on behalf of Owner relating to the Work is solely for the benefit of Owner, and shall not be relied upon by Contractor. Contractor shall not be relieved of the obligation to perform Work in accordance with the Contract Documents, nor relieved of any guaranty, warranty, or other obligation,

as a result of any inspections, evaluations, or tests performed by Owner, whether or not such inspections, evaluations, or tests are permitted or required under the Contract Documents. Contractor shall be solely responsible for testing and inspecting Work already performed to determine whether such Work is in proper condition to receive later Work.

9.3 Correction Of Defective Work

9.3.A. If Contractor fails to supply sufficient skilled workers, suitable materials or equipment, or to furnish or perform the Work in such a way that the completed Work will conform to Contract Documents, Owner may order Contractor to replace any such Defective Work, or stop any portion of Work to permit Owner (at Contractor's expense) to replace such Defective Work. These Owner rights are entirely discretionary on the part of the Owner, and shall not give rise to any duty on the part of Owner to exercise the rights for the benefit of Contractor or any other party.

9.3.B. Owner may direct Contractor to correct any Defective Work or remove it from the Site and replace it with Work that is not Defective and satisfactorily correct or remove and replace any damage to other Work or the work of others resulting from the correction or removal. Contractor shall be responsible for any and all claims, costs, losses, and damages caused by or resulting from such correction or removal. A Change Order will be issued incorporating the necessary revisions in the Contract Documents with respect to the Work and the Contract Sum. If the parties are unable to agree to the amount of an appropriate decrease in the Contract Sum, Owner may decide the proper amount or, in its discretion may elect to leave the Contract Sum unchanged and deduct from moneys due Contractor, all such claims, costs, losses, and damages caused by or resulting from the correction or removal. If Contractor disagrees with Owner's calculations, it may make a claim as provided in Article 12 of this Document 00700. Owner's rights under this paragraph 9.3.B shall be in addition to any other rights it may have under the Contract Documents or by law.

9.3.C. Correction Period: If within one year after the date of Final Acceptance, or such longer period of time as may be prescribed by laws or regulations, or by the terms of Contract Documents, any Work (completed or incomplete) is found to be Defective, Contractor shall promptly, without cost to Owner and in accordance with Owner's written instructions, correct such Defective Work. Contractor shall remove any Defective Work rejected by Owner and replace it with Work that is not Defective, and satisfactorily correct or remove and replace any damage to other Work or the work of others resulting therefrom. If Contractor fails to promptly comply with the terms of such instructions, or in an emergency where delay would cause serious risk of loss or damage, Owner may have the Defective Work corrected or the rejected Work removed and replaced. Contractor shall pay for all claims, costs, losses, and damages caused by or resulting from such removal and replacement. Where Contractor fails to correct Defective Work, or defects are discovered outside the correction period, Owner shall have all rights and remedies granted by law.

9.3.D. In special circumstances where a part of the Work is occupied or a particular item of equipment is placed in continuous service before Final Acceptance of all the Work, the correction period for that part of Work or that item may start to run from an earlier date if so provided by Change Order.

9.3.E. Where Defective Work or rejected Work (and damage to other Work resulting therefrom) has been corrected, removed, or replaced under this provision after the commencement of the correction period, the correction period hereunder with respect to such Work shall be extended for an additional period of one year, or such longer period of time as may be prescribed by laws, regulations, or by the terms of the Contract Documents, after such correction or removal and replacement has been satisfactorily completed.

9.4 Acceptance And Correction Of Defective Work By Owner

9.4.A. Owner may accept Defective Work. Contractor shall pay all claims, costs, losses, and damages attributable to Owner's evaluation of and determination to accept such Defective Work. If Owner accepts any Defective Work prior to final payment, a Change Order will be issued incorporating the necessary revisions in the Contract Documents with respect to the Work and the Contract Sum. If the parties are unable to agree to the amount of an appropriate decrease in the Contract Sum, Owner may deduct from moneys due Contractor, all claims, costs, losses, damages, expenses, and liabilities attributable to the Defective Work. If Contractor disagrees with Owner's calculations, Contractor may make a claim as provided in Article 12 of this Document 00700. If Owner accepts any Defective Work after final payment, Contractor shall pay to Owner, an appropriate amount as determined by Owner.

9.4.B. Owner may correct and remedy deficiency if, after five Days' written notice to Contractor, Contractor fails to correct Defective Work or to remove and replace rejected Work in accordance with paragraph 9.3.B of this Document 00700; or provide a plan for correction of Defective Work acceptable to Owner; or perform Work in accordance with Contract Documents. In connection with such corrective and remedial action, Owner may exclude Contractor from all or part of the Site; take possession of all or part of Work and suspend Contractor's Work related thereto; take possession of all or part of Contractor's tools, appliances, construction equipment, and machinery at the Site; and incorporate in Work any materials and equipment stored at the Site or for which Owner has paid Contractor but which are stored elsewhere. Contractor shall allow Owner, its representatives, agents, employees, and other contractors and Engineer's consultants access to the Site to enable Owner to exercise the rights and remedies under this paragraph 9.4.B. Contractor shall be responsible for all claims, costs, losses, damages, expenses and liabilities incurred or sustained by Owner in exercising such rights and remedies. A Change Order will be issued incorporating the necessary revisions in the Contract Documents with respect to Work and the Contract Sum. If the parties are unable to agree to the amount of an appropriate decrease in the Contract Sum, Owner may deduct from moneys due Contractor, all claims, costs, losses and damages caused by or resulting from the correction or removal. If Contractor disagrees with Owner's calculations, Contractor may make a claim as provided in Article 12 of this Document 00700.

9.5 Rights Upon Inspection, Correction, Or Acceptance

9.5.A. Contractor shall not be allowed an extension of Contract Time because of any delay in the performance of Work attributable to the exercise by Owner of its rights and remedies under this Article 9. Where Owner exercises its rights under this Article 9, it retains and may still exercise all other rights it has by law or under the Contract Documents including, but not limited to, the right to terminate Contractor's right to

proceed with the Work under the Contract Documents for cause and/or make a claim or back charge where a Change Order cannot be agreed upon.

9.5.B. Inspection by Owner or its authorized agents or representatives shall not relieve Contractor of its obligation to have furnished material and workmanship in accordance with Contract Documents. Payment for Work completed through periodic progress payments, Final Payment, or otherwise shall not operate to waive Owner's right to require full compliance with Contract Documents and shall in no way be deemed as acceptance of any Defective Work paid therefor. Contractor's obligation to complete the Work in accordance with Contract Documents shall be absolute, unless Owner agrees otherwise in writing.

9.5.C. Neither acceptance of the whole or any part of Work by Owner nor any verbal statements on behalf of Owner or its authorized agents or representatives shall operate as a waiver or Modification of any provision of the Contract Documents, or of any power reserved to Owner herein nor any right to damages provided in the Contract Documents.

9.6 Proof Of Compliance Of Contract Provisions

9.6.A. In order that Owner may determine whether Contractor has complied or is complying with requirements of Contract Documents not readily enforceable through inspection and tests of Work and materials, Contractor shall at any time, when requested, submit to Owner properly authenticated documents or other satisfactory proofs of compliance with all applicable requirements.

10. CONTRACTOR'S ORGANIZATION AND EQUIPMENT

10.1 Contractor's Legal Address

10.1.A. Address and facsimile number given in Contractor's Bid are hereby designated as Contractor's legal address and facsimile number. Contractor may change its legal address and facsimile number by notice in writing, delivered to Owner, which in conspicuous language advises Owner of a change in legal address or facsimile number, and which Owner accepts in writing. Delivery to Contractor's legal address or depositing in any post office or post office box regularly maintained by the United States Postal Service, in a wrapper with postage affixed, directed to Contractor at legal address, or of any drawings, notice, letter or other communication, shall be deemed legal and sufficient service thereof upon Contractor. Facsimile to Contractor's designated facsimile number of any letter, memorandum, or other communication on standard or legal sized paper, with proof of facsimile transmission, shall be deemed legal and sufficient service thereof upon Contractor.

10.2 Contractor's Office At The Work Site

10.2.A. Contractor shall maintain an office at the Site, which office shall be headquarters of a Contractor representative authorized to transmit to and receive from Owner, communications, instructions, or Drawings. Communications, instructions, or Drawings given to Contractor's representative or delivered at the Site office in representative's absence shall be deemed to have been given to Contractor.

10.3 Contractor's Superintendents Or Forepersons

10.3.A. Contractor shall at all times be represented on Site by one or more superintendents or forepersons authorized and competent to receive and carry out any instructions that

Owner may give, and shall be liable for faithful observance of instructions delivered to Contractor or to authorized representative or representatives on Site.

10.4 Proficiency In English

10.4.A. Supervisors, security guards, safety personnel, and employees who have unescorted access to the Site shall possess proficiency in the English language in order to understand, receive, and carry out oral and written communications or instructions relating to their job functions, including safety and security requirements.

10.5 Contractor's And Subcontractors' Employees

10.5.A. Contractor shall employ, and shall permit its Subcontractors to employ, only competent and skillful personnel to do Work. If Owner notifies Contractor that any of its employees, or any of its Subcontractors' employees on Work is incompetent, unfaithful, disorderly, or profane, or fails to observe customary standards of conduct, or refuses to carry out any provision of the Contract Documents, or uses threatening or abusive language to any person on Work representing Owner, or violates sanitary rules, or is otherwise unsatisfactory, and if Owner requests that such person be discharged from Work, then Contractor or its Subcontractor shall immediately discharge such person from Work and the discharged person shall not be re-employed on the Work except with consent of Owner.

10.6 Contractor To Supply Sufficient Workers And Materials

10.6.A. Unless otherwise required by Owner under the terms of Contract Documents, Contractor shall at all times keep on the Site materials and employ qualified workers sufficient to prosecute Work at a rate and in a sequence and manner necessary to complete Work within the Contract Time. This obligation shall remain in full force and effect notwithstanding disputes or claims of any type.

10.6.B. At any time during progress of Work should Contractor directly or indirectly (through Subcontractors) refuse, neglect, or be unable to supply sufficient materials or employ qualified workers to prosecute the Work as required, then Owner may require Contractor to accelerate the Work and/or furnish additional qualified workers or materials as Owner may consider necessary, at no cost to Owner. If Contractor does not comply with the notice within three Business Days of date of service thereof, Owner shall have the right (but not a duty) to provide materials and qualified workers to finish the Work or any affected portion of Work, as Owner may elect. Owner may, at its discretion, exclude Contractor from the Site, or portions of the Site or separate Work elements during the time period that Owner exercises this right. Owner will deduct from moneys due or which may thereafter become due under the Contract Documents, the sums necessary to meet expenses thereby incurred and paid to persons supplying materials and doing Work. Owner will deduct from funds or appropriations set aside for purposes of Contract Documents the amount of such payments and charge them to Contractor as if paid to Contractor. Contractor shall remain liable for resulting delay, including liquidated damages and indemnification of Owner from claims of others.

10.6.C. Exercise by Owner of the rights conferred upon Owner in paragraph 10.6.B of this Document 00700, is entirely discretionary on the part of Owner. Owner shall have no duty or obligation to exercise the rights referred to in paragraph 10.6.B of this Document 00700 and its failure to exercise such rights shall not be deemed an approval

of existing Work progress or a waiver or limitation of Owner's right to exercise such rights in other concurrent or future similar circumstances. The rights conferred upon Owner under paragraph 10.6.B of this Document 00700 are cumulative to Owner's other rights under any provision of the Contract Documents.

10.7 Contractor To List Trades Working

10.7.A. Contractor shall list the trades working on the Site and their scheduled activities on a daily basis, and provide a copy of that list to Owner.

10.8 Contractor's Use Of The Site

10.8.A. Contractor shall not make any arrangements with any person to permit occupancy or use of any land, structure, or building within the limits of the Work, for any purpose whatsoever, either with or without compensation, in conflict with any agreement between Owner and any owner, former owner or tenant of such land, structure, or buildings. Contractor may not occupy Owner-owned property outside the limit of the Work as indicated on the Drawings unless it obtains prior approval from Owner.

10.9 Apprenticeship Program

10.9.A. Contractor and Subcontractors shall comply with the requirements of California Labor Code Sections 1776, 1777.5, and 1777.6 concerning the employment of apprentices by Contractor or Subcontractors. Willful failure to comply may result in penalties, including loss of the right to Bid on or receive public works contracts.

10.9.B. Section 1777.5, as amended, requires a Contractor or Subcontractor employing tradespersons in any apprenticeable occupation to apply to the joint apprenticeship committee nearest the site of a public works project and which administers the apprenticeship program in that trade for a certification of approval. The certificate shall also fix the ratio of apprentices to journeypersons that will be used in performance of the Contract. The ratio of work performed by apprentices to journeypersons in such cases shall not be less than one *hour* of apprentice's work for every five *hours* of labor performed by journeypersons (the minimum ratio for the land surveyor classification shall not be less than one apprentice for each five journeypersons), except:

1. When unemployment for the previous three-month period in the area exceeds an average of 15 percent;
2. When the number of apprentices in training in the area exceeds a ratio of one to five;
3. When a trade can show that it is replacing at least 1/30 of its membership through apprenticeship training on an annual basis state-wide or locally; or
4. Assignment of an apprentice to any work performed under a public works contract would create a condition which would jeopardize his or her life or the life, safety, or property of fellow employees or the public at large or if the specific task to which the apprentice is to be assigned is of such a nature that training cannot be provided by a journeyperson.

10.9.C. Contractor is required to make contributions to funds established for administration of apprenticeship programs if Contractor employs registered apprentices or journeypersons in any apprenticeable trade on such contracts and if other contractors on the public works site are making such contributions.

10.9.D. Information relative to apprenticeship standards, wage schedules, and other requirements may be obtained from the Director of the California Department of Industrial Relations, or from the Division of Apprenticeship Standards and its branch offices.

11. PROSECUTION AND PROGRESS OF THE WORK

11.1 Schedules And Examinations Of Contract Documents

11.1.A. Contractor shall submit schedules, reports, and Submittals in the appropriate quantity and within the required time, arrange conferences and meetings, and proceed with the Work in accordance with Contract Documents, including Sections 01315 (Project Meetings), 01320 (Progress Schedules and Reports), and 01330 (Submittal Procedures).

11.1.B. Contractor shall submit to Owner for review and discussion at the initial Schedule Review Meeting described in Section 01315 (Project Meetings):

1. Progress Schedules and Reports as required by Sections 01320 (Progress Schedules and Reports) and 01330 (Submittal Procedures). Contractor shall utilize Progress Schedule in planning, scheduling, coordinating, performing, and controlling Work (including all activities of Subcontractors, assigned contractors, equipment vendors, and suppliers). Contractor shall update Progress Schedule on a monthly basis to depict accurately the actual progress of Work and for evaluating and preparing Contractor's monthly progress payments. Contractor's failure to submit and maintain an acceptable Progress Schedule may, in Owner's discretion, and without limiting the materiality of Contractor's other obligations under the Contract Documents, constitute grounds to declare Contractor in material breach of the Contract Documents.
2. Within 21 Days after issuance of Notice to Proceed, a preliminary schedule of Submittals that shall list each required Submittal and the times for submitting, reviewing and processing such Submittal, as required by Section 01330 (Submittal Procedures). If no such schedule is agreed upon, then all Submittals shall be completed and submitted within 35 Days after the Notice of Award.
3. Within 21 Days after issuance of Notice to Proceed, a preliminary Schedule of Values for all the Work which shall include quantities and prices of items aggregating the Contract Sum and shall subdivide each Schedule of Values into component activities in sufficient detail to serve as the basis for progress payments during construction. Such Schedule of Values shall include an appropriate amount of overhead and profit applicable to each item of Work, a line item for Project Record Documents, and a line item for Project scheduling, and shall conform to Section 01200 (Price and Payment Procedures).

11.1.C. Unless otherwise provided in the Contract Documents, at least 15 Days before submission of the first Application for Payment, a conference attended by Contractor, Owner, and others as appropriate, will be held to review for acceptability the schedules submitted in accordance with paragraph 11.1.B of this Document 00700. Contractor shall have an additional seven Days to make corrections and adjustments and to complete and resubmit the schedules. Schedules shall be updated and completed as required by Sections 01200 (Price and Payment Procedures), 01320 (Progress Schedules and Reports) and 01330 (Submittal Procedures). No progress payment shall be due or owing to Contractor until the schedules are submitted to and acceptable to Owner or Engineer or both as meeting the requirements of the Contract

Documents, including Sections 01200 (Price and Payment Procedures), 01320 (Progress Schedules and Reports) and 01330 (Submittal Procedures). Owner's acceptance of Contractor's schedules will not create any duty of care or impose on Owner any responsibility for the sequencing, scheduling, or progress of Work, nor will it interfere with or relieve Contractor from Contractor's full responsibility therefor.

11.1.D. Before commencing any portion of Work, Contractor shall inform Owner in writing as to time and place at which Contractor wishes to commence Work, and nature of Work to be done, in order that proper provision for inspection of Work may occur, and to assure measurements necessary for record and payment. Information shall be given to Owner a reasonable time in advance of time at which Contractor proposes to begin Work, so that Owner may complete necessary preliminary work without inconvenience or delay to Contractor.

11.1.E. Contractor shall submit Submittals to Owner (or Engineer if Owner so designates) for review in strict accordance with Section 01330 (Submittal Procedures). Submission of a Submittal shall constitute Contractor's representation that all requirements of Section 01330 (Submittal Procedures) have been complied with. All Submittals will be identified as Owner may require and in the number of copies specified in Section 01330 (Submittal Procedures).

11.1.F. Contractor shall not perform Work that requires submission of a Submittal prior to submission and favorable review of the Submittal. Where a Submittal is required by Contract Documents or the final Schedule of Submittals accepted by Owner, any related Work performed prior to Owner's approval of the pertinent Submittal shall be at the sole expense, responsibility, and risk of Contractor.

11.2 Cost Data

11.2.A. Contractor shall maintain full and correct information as to the number of workers employed in connection with each subdivision of Work, the classification and rate of pay of each worker in the form of certified payrolls, the cost to Contractor of each class of materials, tools, and appliances used by Contractor in Work, and the amount of each class of materials used in each subdivision of Work. Contractor shall provide Owner with copies of certified payrolls every 2 weeks. If Contractor maintains or is capable of generating summaries or reports comparing actual Project costs with Bid estimates or budgets, Contractor shall provide Owner with a copy of such report upon Owner's request and whenever it is generated.

11.2.B. Contractor shall maintain daily job reports recording all significant activity on the job, including the number of workers on Site, Work activities, problems encountered, and delays. Contractor shall provide Owner with copies for each Day Contractor works on the Project, to be delivered to Owner either the same Day or the following morning before starting Work at the Site. Contractor shall take monthly progress photographs of all areas of the Work. Contractor shall maintain copies of all correspondence with Subcontractors and records of meetings with Subcontractors.

11.2.C. Owner shall have the right to audit and copy Contractor's books and records of any type, nature, or description relating to the Project (including but not limited to financial records reflecting in any way costs claimed on the Project), and to inspect the Site, including Contractor's trailer, or other job Site office, and this requirement shall be contained in the subcontracts of Subcontractors working on Site. By way of example, Owner shall have the right to inspect and obtain copies of all Contract Documents,

planning and design documents, Bid proposal and negotiation documents (subject to Document 00670 [Escrow Bid Documents]), cost records and job cost variance reports, design modification proposals, value engineering or other cost reduction proposals, revisions made to the original design, job Progress Reports, photographs, and as-built drawings maintained by Contractor. Owner and any other applicable governmental entity shall have the right to inspect all information and documents maintained under this paragraph 11.2 at any time during the Project and for a period of five years following Substantial Completion. This right of inspection shall not relieve Contractor of its duties and obligations under the Contract Documents. This right of inspection shall be specifically enforceable in a court of law, either independently or in conjunction with enforcement of any other rights in the Contract Documents.

11.2.D. Contractor shall maintain in a safe place at the Site one record copy of all Drawings, Specifications, Addenda, Contract Modifications, Change Orders, Work Directives, Force Account orders, and written interpretations and clarifications in good order and annotated to show all changes made during construction. These Project Record Documents, together with all approved Samples and a counterpart of all approved Shop Drawings, shall be maintained and available to Owner for reference. Upon completion of the Work, Contractor shall deliver to Owner, the Project Record Documents.

12. CLAIMS BY CONTRACTOR

12.1 General

12.1.A. Contract Interpretation Disputes: Should it appear to Contractor that Work to be performed or any of the matters relative to Contract Documents (including without limitation Drawings or Specifications) are not satisfactorily detailed or explained therein, or should any questions arise as to the meaning or intent of Contract Documents (including without limitation Drawings or Specifications), Contractor shall give written notice to Owner. Contractor shall bear all costs incurred in giving notice. Owner will render a determination regarding the issue, which shall be final. If Contractor disagrees with Owner's decision, Contractor's sole and exclusive remedy is to file a claim in accordance with this Article 12. Contractor shall diligently prosecute the Disputed Work (as defined below) to Final Completion pending resolution of any claim.

12.1.B. Work Disputes: Contractor shall give written notice to Owner of any dispute arising under the Contract Documents respecting the true value of any Work performed, the implementation of Work required by Contract Documents, any Work omitted, any extra Work that Contractor may be required to perform or time extensions, respecting the size of any payment to Contractor during the performance of Contract Documents, or of compliance with Contract Documents procedures. Owner will render a determination regarding the issue, which shall be final. If Contractor disagrees with Owner's decision, Contractor's sole and exclusive remedy is to file a claim in accordance with this Article 12. Pending the resolution of any claim, Contractor shall diligently prosecute the Disputed Work to Final Completion.

12.1.C. The claim notice and documentation procedure described in this Article 12 shall constitute a mandatory non-judicial settlement procedure and shall apply to all claims and disputes arising under the Contract Documents, including without limitation any claim or dispute by any Subcontractor or material supplier. All Subcontractor and

supplier claims of any type shall be brought only through Contractor as provided in this Article 12. Under no circumstances shall any Subcontractor or supplier make any direct claim against Owner.

12.1.D. "Claim" means a written demand or written assertion by Contractor seeking, as a matter of right, the payment of money, the adjustment or interpretation of Contract Documents terms, or other relief arising under or relating to Contract Documents. In order to qualify as a "claim," the written demand must state that it is a claim submitted under this Article 12.

12.1.E. A voucher, invoice, proposed change, Application for Payment, or other routine or authorized form of request for payment is not a claim under the Contract Documents. If such request is disputed as to liability or amount, then the disputed portion of the submission may be converted to a claim under the Contract Documents by submitting a separate claim in compliance with claim submission requirements.

12.1.F. The provisions of this Article 12 survive termination, breach, or completion of the Contract Documents. Contractor shall bear all costs incurred in the preparation and submission of a claim.

12.2 Procedure

12.2.A. Should any clarification, determination, action or inaction by Owner or Engineer, Work, or any other event, in the opinion of Contractor, exceed the requirements of or not comply with Contract Documents, or otherwise result in Contractor seeking additional compensation in time or money for any reason (collectively "Disputed Work"), then Contractor and Owner will make good faith attempts to resolve informally any and all such issues, claims and/or disputes. Before commencing the Disputed Work, or within seven Days after Contractor's first knowledge of the Disputed Work, whichever is earlier, Contractor shall file a written notice and cost proposal for the Disputed Work with Owner stating clearly and in detail its objection and reasons for contending the Work or interpretation is outside the requirements of Contract Documents. If a written notice and cost proposal for Disputed Work is not issued within this time period, or if Contractor proceeds with the Disputed Work without first having given the notice required by this paragraph 12.2.A, Contractor shall waive its rights to further claim on the specific issue.

12.2.B. Owner will review Contractor's timely notice and cost proposal for Disputed Work and provide a decision. If, after receiving the decision, Contractor disagrees with it or still considers the Work required of it to be outside of the requirements of Contract Documents, it shall so notify Owner, in writing, within seven Days after receiving the decision, by submitting a notice of potential claim, stating that a formal claim will be issued. Within 30 Days of receiving the decision, Contractor shall submit its claim in the form specified herein and all arguments, justification, cost or estimates, schedule analysis, and detailed documentation supporting its position. Contractor's failure to furnish notification within seven Days and all justifying documentation within 30 Days will result in Contractor waiving its right to the subject claim. If Disputed Work persists longer than 30 Days, then Contractor shall, every 30 Days until the Disputed Work ceases, submit to Owner a document titled "Claim Update" that shall update and quantify all elements of the claim as completely as possible. Contractor's failure to submit a Claim Update or to quantify costs every 30 Days shall result in waiver of the claim for that 30-Day period. Claims or Claim Updates stating that damages, total

damages (direct and indirect), schedule input and/or any time extension will be determined at a later date shall not comply with this paragraph 12.2.B and shall result in Contractor waiving its claim(s).

12.2.C. Upon receipt of Contractor's formal claim including all arguments, justifications, cost or estimates, schedule analysis, and all other documentation supporting its position as required herein, Owner or its designee will review the issue and render a final determination. Owner may in its discretion first conduct an administrative hearing on the claim, in which event Contractor shall appear and provide further substantiating information and documents if requested by Owner.

12.2.D. Claims shall be calculated in the same manner as Change Orders per Section 01250 (Modification Procedures). EXCEPT WHERE PROVIDED BY LAW, OR ELSEWHERE IN THESE CONTRACT DOCUMENTS (IF APPLICABLE), OWNER SHALL NOT BE LIABLE FOR SPECIAL OR CONSEQUENTIAL DAMAGES, AND CONTRACTOR SHALL NOT INCLUDE THEM IN ITS CLAIMS. CONTRACTOR SHALL BE LIMITED IN ITS RECOVERY ON CLAIMS TO THE CHANGE ORDER CALCULATIONS SET FORTH IN SECTION 01250 (MODIFICATION PROCEDURES).

12.3 Claim Format

12.3.A. Contractor shall submit the claim justification in the following format:

1. Cover letter and certification under penalty of perjury of the accuracy of the claim;
2. Summary of claim, including underlying facts, entitlement, schedule analysis, quantum calculations, Contract provisions supporting relief;
3. List of documents relating to claim including Specifications, Drawings, clarifications/requests for information, schedules, notices of delay, and any others;
4. Chronology of events and correspondence;
5. Analysis of claim merit;
6. Analysis of claim cost; and
7. Attach supporting documents referenced in paragraph 12.3.A.3.

12.4 Mediation

12.4.A. All Contractor claims not subject to the claim resolution procedures set forth in Section 01410 (Regulatory Requirements) shall, as a condition precedent to litigation (or if otherwise permitted by the Contract Documents, arbitration) thereon, first be mediated. Mediation shall be non-binding and utilize the services of a mediator mutually acceptable to the parties and, if the parties cannot agree, a mediator selected by the American Arbitration Association from its panel of approved mediators trained in construction industry mediation. Except as provided below in Section 12.7, all statutes of limitation shall be tolled from the date of the demand for mediation until a date two weeks following the mediation's conclusion. All unresolved Contractor claims shall be submitted to the same mediator. The cost of mediation shall be equally shared.

12.5 Subcontractor Claims

12.5.A. Contractor shall present as its claims all Subcontractor, sub-Subcontractor and supplier claims of any type, and prove them under the terms of the Contract Documents. Owner shall not be directly liable to any Subcontractor, any supplier, or any other person or organization, or to any surety for or employee or agent of any of them, for damages or extra costs of any type arising out of or resulting from the Project.

12.6 Exclusive Remedy

12.6.A. Contractor's performance of its duties and obligations specified in this Article 12 and administration of a claim as provided in this Article 12 is Contractor's sole and exclusive remedy for disputes of all types pertaining to the payment of money, extension of time, the adjustment or interpretation of the Contract Documents terms or other contractual or tort relief arising from Contract Documents. This exclusive remedy and the limitation of liability (expressed herein and elsewhere throughout the Contract Documents) apply notwithstanding the completion, termination, suspension, cancellation, breach, or rescission of the Work or Contract Documents, negligence or strict liability by Owner, its representatives, consultants, or agents, or the transfer of Work or the Project to Owner for any reason whatsoever. Contractor waives and covenants not to raise any claims of waiver, estoppel, release, bar, or any other type of excuse for non-compliance with these Article 12 claim submission, administration, and mediation requirements. Compliance with the claim submission, administration, and mediation procedures described in this Article 12 is a condition precedent to the right to file a Government Code Claim, commence litigation or commence any other legal action. Claim(s) or issue(s) not raised in a timely protest and timely claim submitted under this Article 12 may not be asserted in any subsequent Government Code Claim, litigation or legal action. Owner shall not be deemed to waive any provision under this Article 12, if at Owner's sole discretion, a claim is administered in a manner not in accord with this Article 12.

12.7 Final Claim Disposition

12.7.A. If the Contractor's claims submitted in accordance with this Article 12 at Project completion total $375,000 or less, then claims resolution shall proceed in the manner prescribed by Article 1.5, Chapter 1, Part 3 of Division 2 of the California Public Contract Code. If such claims exceed $375,000, then Contractor shall prepare a compendium of claims submitted and not resolved as a result of these procedures, and submit them in a Govt. Code Section 910 form of claim for final investigation and consideration of their settlement prior to initiation of any litigation thereon, as required by Government Code Section 945.4. Pursuant to Government Code Section 930.2, the one-year period in Government Code Section 911.2 shall be reduced to 150 days.

13. LEGAL AND MISCELLANEOUS

13.1 Laws And Regulations

13.1.A. Contractor shall keep fully informed of and shall comply with all laws, ordinances, regulations, and orders of any properly constituted authority affecting the Contract Documents, Work and persons connected with Work, and shall protect and indemnify Owner and its officers, employees, consultants, and agents against any claim or liability, including attorneys' fees, arising from or based on violation of law, ordinance, regulation or order, whether by Contractor or by Subcontractors, employees, or agents. Authorized persons may at any time enter upon any part of Work to ascertain compliance of all applicable laws, ordinances, regulations and orders.

13.1.B. Whenever Drawings and Specifications require larger sizes or higher standards than are required by any applicable law, ordinance, regulation, or order, Drawings and Specifications shall govern. Whenever Drawings and Specifications require something

that will violate such laws, ordinances, regulations, or orders, then such laws, ordinances, regulations, or orders shall govern.

13.2 Permits And Taxes

13.2.A. Contractor shall procure all permits and licenses applicable to the Work (including environmental matters to the extent applicable); pay all charges and fees, including fees for street opening permits; comply with, implement, and acknowledge effectiveness of all permits; initiate and cooperate in securing all required notifications or approvals therefore; and give all notices necessary and incident to due and lawful prosecution of Work, unless otherwise provided herein. Owner will pay applicable building permits, school, sanitation, and water fees for the completed construction, except as otherwise provided in the Contract Documents. Contractor shall pay all sales and/or use taxes levied on materials, supplies, or equipment purchased and used on or incorporated into Work, and all other taxes properly assessed against equipment or other property used in connection with Work, without any increase in the Contract Sum. Contractor shall make necessary arrangements with proper authorities having jurisdiction over roads, streets, pipelines, navigable waterways, railroads, and other works in advance of operations, even where Owner may have already obtained permits for the Work.

13.3 Responsibility Of Contractor And Indemnification

13.3.A. Owner and each of its officers, employees, consultants, and agents including, but not limited to, Agency, the Board, Engineer, and each Owner's Representative, shall not be liable or accountable in any manner for loss or damage that may happen to any part of the Work; loss or damage to materials or other things used or employed in performing the Work; injury, sickness, disease, or death of any person; or damage to property resulting from any cause whatsoever except their sole negligence, willful misconduct or active negligence, attributable to performance or character of the Work, and Contractor releases all of the foregoing persons and entities from any and all such claims.

13.3.B. To the furthest extent permitted by law (including without limitation California Civil Code Section 2782), Contractor shall assume defense of, and indemnify and hold harmless, Owner and each of its officers, employees, consultants, and agents, including but not limited to Agency, the Board, Engineer, and each Owner's Representative, from claims, suits, actions, losses and liability of every kind, nature and description, including but not limited to claims and fines of regulatory agencies and attorneys' fees and consultants' fees, directly or indirectly arising out of, connected with or resulting from performance of the Work, failure to perform the Work, or condition of the Work which is caused in whole or part by any act or omission of Contractor, Subcontractors, anyone directly or indirectly employed by any of them or anyone for whose acts any of them may be liable, regardless of whether it is caused in part by the negligence of Owner or by any person or entity required to be indemnified hereunder.

13.3.C. With respect to third-party claims against Contractor, Contractor waives any and all rights to any type of express or implied indemnity against Owner and each of its officers, employees, consultants, and agents including, but not limited to Agency, Owner, the Board, Engineer and each Owner's Representative.

13.3.D. Approval or purchase of any insurance contracts or policies shall in no way relieve from liability nor limit the liability of Contractor, its Subcontractors of any tier, or the officers or agents of any of them.

13.3.E. To the furthest extent permitted by law (including, without limitation, Civil Code Section 2782), the indemnities, releases of liability and limitations of liability, claims procedures, and limitations of remedy expressed throughout Contract Documents shall apply even in the event of breach of Contract, negligence (active or passive), fault or strict liability of the party(ies) indemnified, released, or limited in liability, and shall survive the termination, rescission, breach, abandonment, or completion of the Work or the terms of the Contract Documents. If Contractor fails to perform any of these defense or indemnity obligations, Owner may in its discretion back charge Contractor for Owner's costs and damages resulting therefrom and withhold such sums from progress payments or other Contract moneys which may become due.

13.3.F. The indemnities in the Contract Documents shall not apply to any indemnified party to the extent of its sole negligence or willful misconduct; nor shall they apply to Owner or other indemnified party to the extent of its active negligence.

13.4 Concealed Or Unknown Conditions

13.4.A. If either of the following conditions is encountered at Site when digging trenches or other excavations that extend deeper than four feet below the surface, Contractor shall give a written Notice of Differing Site Conditions to Owner promptly before conditions are disturbed, except in an emergency as required by paragraph 16.4 of this Document 00700, and in no event later than seven Days after first observance of:

1. Subsurface or Latent physical conditions which differ materially from those indicated in the Contract Documents; or
2. Unknown physical conditions of an unusual nature or which differ materially from those ordinarily encountered and generally recognized as inherent in work of the character provided for in the Contract Documents.

13.4.B. In response to Contractor's Notice of Differing Site Conditions under paragraph 13.4.A, Owner will investigate the identified conditions, and if they differ materially and cause increase or decrease in Contractor's cost of, or time required for, performance of any part of the Work, Owner will issue either a Request for Proposal or a Construction Change Directive under the procedures described in the Contract Documents, including without limitation Section 01250 (Modification Procedures). If Owner determines that physical conditions at the Site are not Latent or are not materially different from those indicated in Contract Documents or that no change in terms of the Contract Documents is justified, Owner will so notify Contractor in writing, stating reasons (with Contractor retaining its rights under Article 12 of this Document 00700).

13.4.C. Contractor shall not be entitled to any adjustment in the Contract Sum or Contract Time regarding claimed Latent or materially different Site conditions (whether above or below grade) if:

1. Contractor knew of the existence of such conditions at the time Contractor submitted its Bid; or
2. Contractor should have known of the existence of such conditions as a result of having complied with the requirements of Contract Documents, including without limitation paragraphs 2.1 and 8.4 of this Document 00700; or

3. The information or conditions claimed by Contractor to be Latent or materially different consist of information, conclusions, opinions, or deductions of the kind that paragraph 2.1 of this Document 00700 precludes reliance upon; or
4. Contractor was required to give written Notice of Differing Site Conditions and failed to do so within the time required.

13.4.D. If Owner and Contractor are unable to agree on entitlement to or as to the amount or length of any adjustment in the Contract Sum or Contract Time required under this paragraph 13.4, Contractor shall proceed with the Work as directed by Owner and may make a claim as provided in Article 12 of this Document 00700.

13.5 Notice Of Hazardous Waste Or Materials Conditions

13.5.A. Contractor shall give a written Notice of Hazardous Materials Condition to Owner promptly, before any of the following conditions are disturbed (except in an emergency as required by paragraph 16.4 of this Document 00700), and in no event later than 24 hours after first observance of any:

1. Material that Contractor believes may be hazardous waste or hazardous material, as defined in Section 25117 of the Health and Safety Code (including, without limitation, Asbestos, lead, PCBs, petroleum and related hydrocarbons, and radioactive material) that is required to be removed to a Class I, Class II, or Class III disposal site in accordance with provisions of existing law ("hazardous material"); or
2. Other material that may present an imminent substantial danger to persons or property exposed thereto in connection with Work at the Site ("other materials").

13.5.B. Except as otherwise provided in the Contract Documents or as provided by applicable law, Contractor shall not be required to give any notice for the disturbance or observation of any such hazardous materials or other materials where such matter is disturbed or observed as part of the scope of Work under the Contract Documents (such as hazardous waste or hazardous material investigation, remediation or disposal activities which are identified as the subject of Work under the Contract Documents), where Contractor complies with all requirements in the Contract Documents and applicable law respecting such materials.

13.5.C. Contractor's Notice of Hazardous Materials Condition shall indicate whether the hazardous materials or other materials were shown or indicated in the Contract Documents to be within the scope of Work, and whether the hazardous materials or other materials were brought to the Site by Contractor, its Subcontractors, suppliers, or anyone else for whom Contractor is responsible.

13.5.D. Contractor shall not be entitled to any adjustment in the Contract Sum or Contract Time regarding claimed hazardous waste or materials if:

1. Contractor knew of the existence of such hazardous materials or other materials at the time Contractor submitted its Bid; or
2. Contractor should have known of the existence of such hazardous material or other materials as a result of its having the responsibility to obtain additional or supplementary examinations, investigation, explorations, tests, studies, and data concerning the conditions at or contiguous to the Site prior to submitting its Bid; or
3. Contractor failed to give the written notice within the time required by paragraph 13.5.A of this Document 00700.

13.5.E. If Owner determines that conditions involve hazardous materials or other materials and that a change in Contract Document terms is justified, Owner will issue either a Request for Proposal or Construction Change Directive under the procedures described in the Contract Documents, including without limitation Section 01250 (Modification Procedures). If Owner determines that conditions do not involve hazardous materials or other materials or that no change in Contract Document terms is justified, Owner will notify Contractor in writing, stating the reasons for its determination.

13.5.F. In addition to the parties' other rights under paragraph 13.5.E of this Document 00700, if Contractor does not agree to resume Work based on a reasonable belief that it is unsafe, or does not agree to resume Work under special conditions, Owner may order the disputed portion of Work deleted from the Work, or performed by others, or Owner may invoke its right to terminate Contractor's right to proceed under the Contract Documents in whole or in part, for convenience or for cause as the facts may warrant.

13.5.G. If Contractor does not agree with any Owner determination of any adjustment in the Contract Sum or Contract Time under this paragraph 13.5, Contractor may make a claim as provided in Article 12 of this Document 00700.

13.6 Suspension Of Work

13.6.A. Owner may, without cause, order Contractor in writing to suspend, delay or interrupt Work in whole or in part for such period of time as Owner may determine. An adjustment shall be made for increases in cost of performance of Work of the Contract Documents caused by any such suspension, delay or interruption, calculated using the measures set forth in Section 01250 (Modification Procedures). No adjustment shall be made to extent that:

1. Performance is, was or would have been so suspended, delayed or interrupted by another cause for which Contractor is responsible; or
2. An equitable adjustment is made or denied under any other provision of Contract Documents; or
3. The suspension of Work was the direct or indirect result of Contractor's failure to perform any of its obligations hereunder. Adjustments made in cost of performance may have a mutually agreed fixed or percentage fee; if the parties cannot agree, Contractor may file a claim under Article 12 of this Document 00700.

13.7 Termination Of Contract For Cause

13.7.A. Owner may declare Contractor in default of Contract Documents and Owner may terminate Contractor's right to proceed under the Contract Documents for cause:

1. Should Contractor make an assignment for the benefit of creditors; admit in writing its inability to pay its debts as they become due; file a voluntary petition in bankruptcy; be adjudged a bankrupt or insolvent; be the subject of an involuntary petition in bankruptcy which is not dismissed within 60 Days; file a petition or answer seeking for itself any reorganization, arrangement, composition, readjustment, liquidation, dissolution, or similar relief under any present or future statute, law, or regulation; file any answer admitting or not contesting the material allegations of a petition filed against Contractor in any such proceeding; or seek, consent to, or acquiesce in, the appointment of any trustee, receiver, custodian or liquidator of Contractor or of all or any substantial part of its properties or if

Contractor, its directors or shareholders, take action to dissolve or liquidate Contractor; or

2. Should Contractor commit a material breach of the Contract Documents. If Owner declares Contractor in default due to material breach, however, Owner must allow Contractor an opportunity to cure such breach within ten Days of the date of notice from Owner to Contractor providing notice of the default; or, if such breach is curable but not curable within such ten-Day period, within such period of time as is reasonably necessary to accomplish such cure. (In order for Contractor to avail itself of a time period in excess of ten Days, Contractor must provide Owner within the ten-Day period with a written plan acceptable to Owner to cure said breach which includes, for example, evidence of necessary resources, Subcontractor commitments, schedules and recovery schedules meeting Contract Document requirements and showing a realistic and achievable plan to cure the breach. Contractor must then diligently commence and continue such cure according to the written plan); or
3. Should Contractor violate or allow (by a Subcontractor or other person or entity for which Contractor is responsible) a violation of any valid law, statute, regulation, rule, ordinance, permit, license or order of any governmental agency applicable to the Project or Work and does not cure (or cause to be cured) such violation within ten Days of the date of the notice from Owner to Contractor demanding such cure; or, if such violation is curable but not curable within such ten-Day period, within such period of time as is reasonably necessary to accomplish such cure. (In order for Contractor to avail itself of a time period in excess of ten Days, Contractor shall provide Owner within the ten-Day period with a written plan to cure said violation acceptable to Owner, and then diligently commence and continue performance of such cure according to the written plan.)

13.7.B. If Owner at any time reasonably believes that Contractor is or may be in default under the Contract Documents as provided in paragraph 13.7.A of this Document 00700, Owner may in its sole discretion notify Contractor of this fact and request written assurances from Contractor of performance of Contract Documents and a written plan from Contractor to remedy any default under the terms of Contract Documents which Owner may advise Contractor of in writing. Contractor shall, within 10 Days of Owner's request, deliver a written cure plan which meets the requirements of the written plan deliverable under paragraph 13.7.A.2 of this Document 00700. Failure of Contractor to provide such written assurances of performance and the required written plan, within ten Days of request, will constitute a material breach of Contract Documents sufficient to justify termination for cause.

13.7.C. In event of termination for cause, Owner will immediately serve written notice thereof upon Surety and Contractor. Surety shall have the rights and obligations set forth in Document 00610 (Construction Performance Bond). Subject to the Surety's rights under the Performance Bond (which rights are waived upon a default thereunder), Owner may take over the Work and prosecute it to completion by contract or by any other methods it may deem advisable.

13.7.D. In the event of termination by Owner as provided in paragraph 13.7.A of this Document 00700 for cause:

1. Owner will compensate Contractor for the value of the Work delivered to Owner upon termination as determined in accordance with the Contract Documents, subject to all rights of offset and back charges, and provided that Contractor

provides Owner with updated as-builts and Project Record Documents showing the Work performed up to the date of termination. However, Owner will not compensate Contractor for its costs in terminating the Work or any cancellation charges owed to third parties.

2. Contractor shall deliver to Owner possession of the Work in its then condition including, but not limited to, all designs, engineering, Project records, Project Record Documents, cost data of all types, Drawings and Specifications and contracts with vendors and Subcontractors, all other documentation associated with the Project, and all construction supplies and aids dedicated solely to performing the Work which, in the normal course of construction, would be consumed or only have salvage value at the end of the construction period. Contractor shall remain fully liable for the failure of any Work completed and materials and equipment provided through the date of such termination to comply with the provisions of the Contract Documents. The provisions of this paragraph 13.7.D shall not be interpreted to diminish any right which Owner may have to claim and recover damages for any breach of Contract Documents or otherwise, but rather, Contractor shall compensate Owner for all loss, cost, damage, expense, and/or liability suffered by Owner as a result of such termination and failure to comply with Contract Documents.
3. Owner's rights under paragraph 13.7.D.2 shall be specifically enforceable to the greatest extent permitted by law. Owner shall, to the extent applicable, have all other rights and remedies set forth in any Bidding Document.

13.7.E. Owner may terminate portions or parts of the Work for cause, provided these portions or parts (1) have separate geographic areas from parts or portions of the Work not terminated or (2) are limited to the Work of one or more specific trades or Subcontractors. In such case, Contractor shall cooperate with a competing contractor as required under Article 6 of this Document 00700.

13.7.F. In the event a termination for cause is determined to have been made wrongfully or without cause, then the termination shall be treated as a termination for convenience, and Contractor shall have no greater rights than it would have had following a termination for convenience. Any Contractor claim arising out of a termination for cause shall be made in accordance with the provisions of the Contract Documents on claims and calculated in accordance with the provisions of the Contract Documents on Change Orders and claims. No other loss cost, damage, expense or liability may be claimed, requested or recovered by Contractor.

13.8 Termination Of Contract For Convenience

13.8.A. Owner may terminate performance of the Work under the Contract Documents in accordance with this clause in whole, or from time to time in part, whenever Owner shall determine that termination is in Owner's best interest. Termination shall be effected by Owner delivering to Contractor notice of termination specifying the extent to which performance of the Work under the Contract Documents is terminated and the effective date of the termination.

13.8.B. After receiving a notice of termination under paragraph 13.8.A of this Document 00700, and except as otherwise directed by Owner, Contractor shall:

1. Stop Work under the Contract Documents on date and to extent specified in notice of termination;

2. Place no further orders or subcontracts for materials, services, or facilities except as necessary to complete portion of Work under the Contract Documents which is not terminated;
3. Terminate all orders and subcontracts to extent that they relate to performance of Work terminated by the notice of termination;
4. Assign to Owner in manner, at times, and to extent directed by Owner, all right, title, and interest of Contractor under orders and subcontracts so terminated. Owner shall have the right, in its sole discretion, to settle or pay any or all claims arising out of termination of orders and subcontracts;
5. Settle all outstanding liabilities and all claims arising out of such termination of orders and subcontracts, with approval or ratification of Owner to extent Owner may require. Owner's approval or ratification shall be final for purposes of this paragraph 13.8;
6. Transfer title to Owner, and deliver in the manner, at the times, and to the extent, if any, directed by Owner, all fabricated or unfabricated parts, Work in process, completed Work, supplies, and all other material produced as part of, or acquired in connection with performance of, Work terminated by the notice of termination, and completed or partially completed drawings, drawings, specifications, information, and other property which, if the Project had been completed, would have been required to be furnished to Owner;
7. Use its best efforts to sell, in manner, at times, to extent, and at price or prices that Owner directs or authorizes, any property of types referred to in paragraph 13.8.B.6 of this Document 00700, but Contractor shall not be required to extend credit to any purchaser, and may acquire any such property under conditions prescribed and at price or prices approved by Owner. Proceeds of transfer or disposition shall be applied to reduce payments to be made by Owner to Contractor under the Contract Documents or shall otherwise be credited to the price or cost of Work covered by Contract Documents or paid in such other manner as Owner may direct;
8. Complete performance of the part of the Work which was not terminated by the notice of termination; and
9. Take such action as may be necessary, or as Owner may direct, to protect and preserve all property related to Contract Documents which is in Contractor's possession and in which Owner has or may acquire interest.

13.8.C. After receipt of a notice of termination under paragraph 13.8.A of this Document 00700, Contractor shall submit to Owner its termination claim, in form and with all certifications required by Article 12 of this Document 00700. Contractor's termination claim shall be submitted promptly, but in no event later than 6 months from effective date of the termination. Contractor and Owner may agree upon the whole or part of the amount or amounts to be paid to Contractor because of a total or partial termination of Work under this paragraph 13.8. If Contractor and Owner fail to agree on the whole amount to be paid to Contractor because of the termination of the Work under this paragraph 13.8, Owner's total liability to Contractor by reason of the termination shall be the total (without duplication of any items) of:

1. The reasonable cost to Contractor, without profit, for all Work performed prior to the effective date of the termination, including Work done to secure the Project for termination. Reasonable cost may not exceed the applicable percentage completion values derived from the Progress Schedule and the Schedule of Values.

Deductions shall be made for cost of materials to be retained by Contractor, cost of Work defectively performed, amounts realized by sale of materials, and for other appropriate credits against cost of Work. Reasonable cost will include reasonable allowance for Project overhead and general administrative overhead not to exceed a total of ten percent of direct costs of such Work. When, in Owner's opinion, the cost of any item of Work is excessively high due to costs incurred to remedy or replace Defective or rejected Work, reasonable cost to be allowed will be the estimated reasonable cost of performing the Work in compliance with requirements of Contract Documents and excessive actual cost shall be disallowed.

2. A reasonable allowance for profit on cost of Work performed as determined under paragraph 13.8.C.1 of this Document 00700, provided that Contractor establishes to Owner's satisfaction that Contractor would have made a profit had the Project been completed, and provided further that the profit allowed shall not exceed 5 percent of cost.
3. Reasonable costs to Contractor of handling material returned to vendors, delivered to Owner or otherwise disposed of as directed by Owner.
4. A reasonable allowance for Contractor's internal administrative costs in preparing termination claim.
5. Except as provided in this paragraph 13.8.C of this Document 00700, Owner shall not be liable for costs incurred by Contractor or Subcontractors after receipt of a notice of termination. Such non-recoverable costs include, but are not limited to, anticipated profits on Work not performed as of the date of termination, post-termination employee salaries, post-termination general administrative expenses, post-termination overhead or unabsorbed overhead, costs of preparing and submitting Contractor's Bid, attorneys' fees of any type, and all costs relating to prosecution of claim or lawsuit.
6. Owner shall have no obligation to pay Contractor under this paragraph 13.8 unless and until Contractor provides Owner with updated and acceptable as-builts and Project Record Documents for Work completed prior to termination.

13.8.D. In arriving at the amount due Contractor under this clause, there shall be deducted:

1. All unliquidated advances or other payments on account previously made to Contractor which are applicable to the terminated portion of Contract Documents;
2. Any claim which Owner may have against Contractor in connection with Contract Documents; and
3. The agreed price for, or proceeds of sale of, any materials, supplies, or other things kept by Contractor or sold under provisions of this paragraph 13.8, and not otherwise recovered by or credited to Owner.

13.9 Contingent Assignment Of Subcontracts

13.9.A. Contractor hereby assigns to Owner each Subcontract for a portion of the Work, provided that:

1. The assignment is effective only after Owner's termination of Contractor's right to proceed under the Contract Documents (or portion thereof relating to that Subcontract) pursuant to paragraphs 13.7 or 13.8 of this Document 00700.
2. The assignment is effective only for the Subcontracts which Owner expressly accepts by notifying the Subcontractor in writing;

3. The assignment is subject to the prior rights, if any, of the Surety, obligated by Document 00610 (Construction Performance Bond) provided under the Contract Documents, where the Surety exercises its rights to complete the Contract;
4. After the effectiveness of an assignment, Contractor shall, at its sole cost and expense (except as otherwise provided in paragraphs 13.7 or 13.8 of this Document 00700), sign all instruments and take all actions reasonably requested by Owner to evidence and confirm the effectiveness of the assignment in Owner; and
5. Nothing in this paragraph 13.9 shall modify or limit any of Contractor's obligations to Owner arising from acts or omissions occurring before the effectiveness of any Subcontract assignment, including but not limited to all defense, indemnity and hold-harmless obligations arising from or related to the assigned Subcontract.

13.10 Remedies and Contract Integration

13.10.A. Subject to Contract Documents provisions regarding Contractor claims, claim review, and claim resolution, and subject to the limitations therein, the exclusive jurisdiction and venue for resolving all claims, counter-claims, disputes and other matters in question between Owner and Contractor arising out of or relating to Contract Documents, any breach thereof or the Project shall be the applicable court of competent jurisdiction located in the State of California, County of Sonoma. All Owner remedies provided in the Contract Documents shall be taken and construed as cumulative and not exclusive; that is, in addition to each and every other remedy herein provided; and in all instances Owner shall have any and all other equitable and legal rights and remedies which it would have according to law.

13.10.B. The Contract Documents, any Contract Modifications, and Change Orders shall represent the entire and integrated agreement between Owner and Contractor regarding the subject matters hereof and thereof and shall constitute the exclusive statement of the terms of the parties' agreement. The Contract Documents, and any Contract Modifications and Change Orders, shall supersede any and all prior negotiations, representations or agreements, written or oral, express or implied, that relate in any way to the subject matter of the Contract Documents or written Modifications. Owner and Contractor represent and agree that, except as otherwise expressly provided in the Contract Documents, they are entering into the Contract Documents and any subsequent written Modification in sole reliance upon the information set forth or referenced in the Contract Documents or Contract Modifications and the parties are not and will not rely on any other information.

13.10.C. In any proceeding to enforce the Contract Documents, Contractor and Owner agree that the finder of fact shall receive detailed instructions on the meaning and operation of the Contract Documents, including their conditions, limitations of liability and remedies clauses, claims procedures and any other provisions impacting major defenses and theories of liability of the parties. Detailed findings of fact shall be requested, to verify Contract enforcement.

13.10.D. Either party's waiver of any breach or failure to enforce any of the terms, covenants, conditions or other provisions of the Contract Documents at any time shall not in any way affect, limit, modify or waive that party's right thereafter to enforce or compel strict compliance with every term, covenant, condition or other provision hereof, any course of dealing or custom of the trade or oral representations notwithstanding.

13.11 Patents

13.11.A. Fees or claims for any patented invention, article or arrangement that may be used upon or in any manner connected with performance of the Work or any part thereof shall be included in the Bid price for doing the Work. Contractor shall defend, indemnify and hold harmless Owner and each of its officers, employees, consultants and agents, including, but not limited to, the Board and each Owner's Representative, including Agency from all damages, claims for damages, costs or expenses in law or equity, including attorneys' fees, arising from or relating to any claim that any article supplied or to be supplied under the Contract Documents infringes on the patent rights, copyright, trade name, trademark, service mark, trade secret or other intellectual property right of any person or persons or that the person or entity supplying the article does not have a lawful right to sell the same. Such costs or expenses for which Contractor agrees to indemnify and hold harmless the above indemnities include but are not limited to any and all license fees, whether such fees are agreed by any indemnitee or ordered by a court or administrative body of any competent jurisdiction.

13.12 Substitution For Patented And Specified Articles

13.12.A. Except as provided otherwise in Document 00200 (Instructions to Bidders) or in the Contract Documents, whenever in Specifications, material or process is designated by patent or proprietary name or by name of manufacturer, such designation shall be deemed to be used for purpose of facilitating description of material and process desired, and shall be deemed to be followed by the words "or Approved Equal" and Contractor may offer any substitute material or process that Contractor considers "equal" in every respect to that so designated and if material or process offered by Contractor is, in opinion of Owner, Equal in every respect to that so designated, its use will be approved. However, Contractor may utilize this right only by timely submitting Document 00660 (Substitution Request Form) as provided in Document 00200 (Instructions to Bidders). A substitution will be approved only if it is a true Equal item in every aspect of its design and quality, including but not limited to its dimensions, weights, service requirements, durability, functioning, impact on contiguous construction elements, overall schedule and design.

13.13 Interest Of Public Officers

13.13.A. No representative, officer, or employee of Owner or Agency, no member of the governing body of the locality in which the Project is situated, no member of the locality in which Owner or Agency was activated, and no other public official of such locality or localities who exercises any functions or responsibilities with respect to the Project, during the tenure of the official or for one year thereafter, shall, as principal, agent, attorney or otherwise, be directly or indirectly interested, in the Contract Documents or the proceeds thereof.

13.14 Limit Of Liability

13.14.A. OWNER, AND EACH OF ITS OFFICERS, BOARD MEMBERS, EMPLOYEES, CONSULTANTS AND AGENTS INCLUDING, BUT NOT LIMITED TO, ENGINEER, THE AGENCY, AND EACH OTHER OWNER REPRESENTATIVE, SHALL HAVE NO LIABILITY TO CONTRACTOR FOR SPECIAL, CONSEQUENTIAL, OR INCIDENTAL DAMAGES, EXCEPT TO THE LIMITED EXTENT THAT THESE CONTRACT

DOCUMENTS OR APPLICABLE PUBLIC CONTRACTING STATUTES MAY SPECIFY THEIR RECOVERY.

14. MODIFICATIONS OF CONTRACT DOCUMENTS

14.1 Alterations, Modifications And Force Account Work

14.1.A. No modification or deviation from the Drawings and Specifications will be permitted except by written Contract Modification.

14.1.B. Owner may, without notice to the sureties, make alterations, deviations, additions to, or deletions from Contract Documents; increase or decrease the quantity of any item or portion of the Work; expand, contract or otherwise change the Contract Time; delete any item or portion of the Work; and require extra Work. Contractor shall perform such Work under applicable provisions of the Contract Documents, unless specifically provided otherwise at the time the change is ordered. In the case of any ordered extra Work, Owner reserves the right to furnish all or portions of associated labor, material, and equipment, which Contractor shall accept and use without payment for costs, markup, profit, or otherwise for such Owner-furnished labor, materials, and equipment.

14.1.C. Changes affecting the Contract Time or Contract Sum of the Work shall be set forth in a written Change Order that shall specify:

1. The Work performed in connection with the change to be made;
2. The amount of the adjustment of the Contract Sum, if any, and the basis for compensation for the Work ordered; and
3. The extent of the adjustment in the Contract Time, if any.

14.1.D. A Change Order will become effective when signed by Owner. If Owner exercises its right to decide disputed issues pertaining to changed Work as set forth in Articles 12 and 14 of this Document 00700, then the resulting Change Order shall be effective when signed by Owner, notwithstanding that Contractor has not signed it.

14.1.E. Changes not affecting the Contract Time or Contract Sum of the Work, in Owner's discretion, may be set forth in a written RFI-Reply executed by Owner. Execution of such an RFI-Reply constitutes Contractor's agreement to make the specified change without change to the Contract Sum or the Contract Time.

14.1.F. Changes or deviations from Contract Documents affecting the Contract Time or Contract Sum of the Work shall not be made without the authority of an effective Change Order or Construction Change Directive as provided in Section 01250 (Modification Procedures), except in cases of emergency discussed in Article 16 of this Document 00700.

14.1.G. If changes ordered in design, workmanship or materials are of such a nature as to increase or decrease the cost of any part of the Work, the price fixed in the Contract Documents shall be increased or decreased by the amount that Contractor and Owner may agree upon as a reasonable and proper allowance for the cost increase or decrease. If an agreement cannot be reached, then Owner will reach a determination, which shall be final, subject to Contractor's rights under Article 12 of this Document 00700. In all cases Contractor shall perform the changed Work as directed by Owner subject to Contractor's rights under Article 12 of this Document 00700.

14.1.H. Contractor shall, upon Owner's request, permit inspection of the original unaltered Bid estimate, subcontract agreements, purchase orders relating to the change, and

documents substantiating all costs associated with its cost proposal or claims arising from changes in the Work.

14.1.I. Changes in the Work made pursuant to this Article 14 and extensions of Contract Time necessary by reason thereof shall not in any way release the guarantees and warranties given by Contractor pursuant to provisions of the Contract Documents, nor shall such changes in the Work relieve or release the Sureties of bonds executed pursuant to said provisions. The Sureties, in executing such bonds, shall be deemed to have expressly agreed to any such change in the Work and to any extension of time made by reason thereof.

14.1.J. Procedures for Modifications of Contract Documents and for calculating the cost of extra Work are given in Section 01250 (Modification Procedures). Regarding delay and impact costs of any nature, Contractor may not seek delay compensation for on-Site or off-Site costs based on formulas, e.g., "Eichlay" or other formula. Rather, Contractor shall prove actual costs resulting from such delays. If Contractor requests compensation for delay to the construction, then Contractor shall prove and document actual costs plus markup per the cost categories and procedures in Section 01250 (Modification Procedures) in order to request, claim or prove compensation for delay.

14.1.K. Owner's General Manager is authorized to approve Change Orders in accordance with Resolution No. 04-0547 dated June 8, 2004. The approval period for such Change Orders is approximately seven Days from receipt of the signed Change Order from Contractor. If a Change Order is equal to or greater than the amounts authorized by Resolution No. 04-0547, it may be necessary for the Board to approve the Change Order, and if so the approval period is approximately 28 Days from receipt of the signed Change Order from Contractor. A performance bond rider covering the changed Work must be executed and delivered to Owner before proceeding with the changed Work. Contractor is charged with knowledge of Owner's approved Change Order limits and procedures in effect at the applicable time.

15. TIME ALLOWANCES

15.1 Time Allowances For Performance Of Contract Documents

15.1.A. When Contractor and Owner have signed the Contract Documents, Owner will serve a Notice to Proceed upon Contractor to that effect, either by depositing notice in a post office or post office box regularly maintained by United States Postal Service in a pre-paid wrapper directed to Contractor at legal address or (at Owner's option) by delivery by other means at legal address.

15.1.B. The start date for Contract Time shall be on the date indicated in the applicable Notice to Proceed. If no date is indicated, the start date for Contract Time shall be the fifth Day from the date that Contractor receives, by hand delivery or facsimile transmission, Owner's written Notice to Proceed, unless the Notice to Proceed is served by mail only, in which case the start date for Contract Time shall be the fifth Day following the mailing date. The total number of Days for completion of the Work under the Contract Documents shall be as provided in Document 00520 (Agreement).

15.2 Entitlement to Change Of Contract Time

15.2.A. The Contract Time may only be changed by Change Order or by Contract Modification, and all time limits stated in the Contract Documents are of the essence of Contract Documents.

15.2.B. The Contract Time will be adjusted in an amount equal to the time lost due to:

1. Changes in the Work ordered by Owner;
2. Acts or neglect by Owner, Engineer, any Owner's Representative, utility owners or other contractors performing other work, provided that Contractor has fully and completely performed its responsibilities under the Contract Documents; or
3. Fires, floods, epidemics, abnormal weather conditions beyond the parameters otherwise set forth in this paragraph 15.2, earthquakes, civil or labor disturbances, strikes or Acts of God, provided damages resulting therefrom are not the result of Contractor's failure to protect the Work as required by Contract Documents.

15.2.C. The Contract Time shall not be extended for any cause identified in paragraph 15.2.B above, however, unless:

1. Contractor actually has been prevented from completing any part of the Work within the Contract Time due to delay that is beyond Contractor's control and due to reasons for which Contractor is not responsible (delays attributable to and within the control of a Subcontractor, or its subcontractors, or supplier shall be deemed to be delays within the control of Contractor);
2. A claim for delay is made as provided herein; and
3. Contractor submits a Time Impact Evaluation as required under Section 01320 (Progress Schedules and Reports) that demonstrates actual delay to critical Work activities that actually delay the progress of the Work in the amount of time requested.

15.2.D. Where Contractor is prevented from completing any part of the Work within the Contract Time due to delay beyond the control of both Owner and Contractor (including, but not limited to, adverse weather of all types and acts of other contractors or utilities), an extension of Contract Time, in an amount equal to the time lost due to such delay (without compensation), shall be Contractor's sole and exclusive remedy for such delay.

15.3 Weather-Related Delays

15.3.A. Delays due to abnormal or adverse weather conditions will not be allowed for weather conditions that fall within the parameters listed herein. Adverse weather delays may be allowed only if the number of workdays of adverse weather exceeds these on a monthly basis and Contractor proves that adverse weather actually caused delays. Contractor shall give written notice of intent to claim an adverse weather Day within one Day of the adverse weather delay occurring. Rain parameters are as follows, pro-rated in the individual month Contractor starts and finishes Work.

Rain Days: January, [9]; February, [8]; March, [7]; April, [4]; May, [2]; June, [1]; July, [0]; August, [0]; September, [1]; October, [3]; November, [6]; and December, [8].

In order to qualify as an adverse weather delay with respect to the foregoing parameters, daily rainfall must exceed 0.10 of an inch or more at the Santa Rosa, California station, as measured by the National Oceanic & Atmospheric Administration, and Contractor must prove that the rain actually caused delay as set forth above.

15.3.B. Contractor shall include the foregoing rain parameters as a monthly activity in its Progress Schedule. As Work on the critical path is affected by rain, Contractor shall notify Owner and request that the Days be moved to the affected activities. Any adverse weather Days remaining shall be considered Project Float.

15.3.C. Adverse weather delay for rain shall be recognized for the actual period of time Contractor proves it was delayed by rain exceeding the specified parameters. For example, and not by way of limitation, if rain exceeding the specified parameters does not in fact delay Contractor's progress on the critical path, then no time extension shall be recognized; and conversely, if Contractor proves that rain exceeding the specified parameters causes delay to Contractor for a period longer than the number of rain Days incurred (e.g., if it rains during grading Work), then Contractor shall be entitled to a time extension equal to the actual period of such delay.

15.3.D. Contractor shall take reasonable steps to mitigate potential weather delays, such as dewatering the Site, covering Work and material that could be affected adversely by weather, and using all necessary construction means and methods to dry and/or aerate wet soils. Failure to do so shall be cause for Owner to not grant a time extension due to adverse weather, where Contractor could have avoided or mitigated the potential delay by exercising reasonable care.

15.4 Notice Of Delay

15.4.A. Within seven Days of the beginning of any delay, Contractor shall notify Owner in writing, by submitting a notice of potential claim, of all anticipated delays resulting from the delay event in question. Any request for extension of time shall be accompanied by Contractor's written statement that the adjustment claimed is the entire adjustment to which the Contractor is entitled as a result of the occurrence of said event, and shall include a written schedule document that demonstrates delay to the critical path using a Time Impact Evaluation as specified in Section 01320 (Progress Schedules). Owner will determine all claims and adjustments in the Contract Time. No claim for an adjustment in the Contract Time will be valid and such claim will be waived if not submitted in accordance with the requirements of this paragraph 15.4.A.

15.5 Time Extensions And/Or Compensation Entitlement For Delays

15.5.A. Contractor may receive a time extension and be compensated for delays caused directly and solely by Owner.

15.5.B. Contractor may receive a time extension without compensation for delays resulting in whole or in part from causes beyond the reasonable control of Contractor and Owner, e.g., adverse weather conditions exceeding Contract Documents parameters, acts of third parties unrelated to Contractor's obligations herein, earthquakes, Acts of God and epidemics. In such cases, a time extension without compensation shall constitute Contractor's sole and exclusive remedy for such delays.

15.5.C. Contractor shall not be entitled to any time extension or compensation including, but not limited to, extended field or home office overhead, field supervision, costs of capital, interest, escalation charges, acceleration costs or other impacts for any delays caused in whole or in part by Contractor's failure to perform its obligations under the Contract Documents, or during periods of delay concurrently caused by Contractor and either Owner or others.

15.5.D. Contractor shall not be entitled to damages for delay to the Work caused by the following reasons:

1. Owner's right to sequence the Work in a manner which would avoid disruption to Owner's contractors and their subcontractors and Owner's employees, exercised as a result of Contractor's failure to perform its cooperation and coordination

responsibilities required by Contract Documents; Owner's enforcement of any government act or regulation; or the provisions of the Contract Documents;

2. For changed Site conditions that are beyond the parties' contemplation, except that Owner may approve direct costs associated with unknown conditions (but not costs or damages which result from such delays); and
3. Extensive requests for clarifications to Contract Documents or Contract Modifications thereto, provided such clarifications or Contract Modifications are processed by Owner or its consultants in a reasonable time commensurate with Contract Documents requirements.

15.6 Liquidated Damages

15.6.A. Time is of the essence. Execution of Contract Documents by Contractor shall constitute acknowledgement by Contractor that Contractor understands, has ascertained and agrees that Owner will actually sustain damages in the amount fixed in the Contract Documents for each and every Day during which completion of Work required is delayed beyond expiration of time fixed for completion or extensions of time allowed pursuant to provisions hereof. Contractor and Owner agree that specified measures of liquidated damages shall be presumed to be the damages actually sustained by Owner as defined below, and that because of the nature of the Project, it would be impracticable or extremely difficult to fix the actual damages.

15.6.B. Liquidated damages shall be considered not as a penalty but as agreed monetary damage sustained by Owner for increased Project administration expenses, including extra inspection, construction management, and architectural and engineering expenses related to the Project and Contract Documents because Contractor failed to perform and complete Work within time fixed for completion or extensions of time allowed pursuant to provisions hereof. Liquidated damages shall not be deemed to include within their scope additional damages or administrative costs arising from Defective Work, lost revenues, interest expenses, cost of completion of the Work, cost of substitute facilities, claims and fines of regulatory agencies, damages suffered by others or other forms of liability claimed against Owner as a result of delay (e.g., delay or delay-related claims of other contractors or subcontractors), and defense costs thereof. Contractor shall be fully responsible for the actual amount of any such damages it causes, in addition to the liquidated damages otherwise due Owner.

15.6.C. Owner may deduct from any money due or to become due to Contractor subsequent to time for completion of entire Work and extensions of time allowed pursuant to provisions hereof, a sum representing then-accrued liquidated damages. Should Contractor fall behind the approved Progress Schedule, Owner may deduct liquidated damages based on its estimated period of late completion. Owner need not wait until Final Completion to withhold liquidated damages from Contractor's progress payments. Should money due or to become due to Contractor be insufficient to cover aggregate liquidated damages due, then Contractor forthwith shall pay the remainder of the assessed liquidated damages to Owner.

16. <u>WORKING CONDITIONS AND PREVAILING WAGES</u>

16.1 Use Of Site/Sanitary Rules

16.1.A. All portions of the Work shall be maintained at all times in neat, clean and sanitary condition. Contractor shall furnish toilets for use of Contractor's and Subcontractors'

employees on the Site where needed, and their use shall be strictly enforced. All toilets shall be properly secluded from public observation, and shall be located, constructed and maintained subject to Owner's approval.

16.1.B. Contractor shall confine construction equipment, the storage of materials and equipment and the operations of workers to the Site and land areas identified in and permitted by Contract Documents and other land and areas permitted by applicable laws and regulations, rights of way, permits and easements or as designated by Owner, and shall not unreasonably encumber the premises with construction equipment or other materials or equipment. Contractor shall assume full responsibility for any damage to any such land or area, any improvement located thereon, or to the owner or occupant thereof resulting from the performance of Work.

16.1.C. During the progress of the Work, Contractor shall keep the Site and the Project free from accumulations of waste materials, rubbish and other debris resulting from the Work. At the completion of the Work, Contractor shall clean the Site, remove all waste materials, rubbish and debris from and about the Site as well as all tools, appliances, construction equipment and machinery and surplus materials. Contractor shall leave the premises clean and ready for occupancy by Owner at Substantial Completion of Work. Contractor shall restore to original condition all property not designated for alteration by Contract Documents.

16.1.D. Contractor shall not load nor permit any part of any structure or pavement to be loaded in any manner that will endanger the structure or pavement, nor shall Contractor subject any part of Work or adjacent property to stresses or pressures that will endanger it. Contractor shall conduct all necessary existing conditions investigation regarding structural, mechanical, electrical or any other system existing, shall perform Work consistent with such existing conditions, and shall have full responsibility for insufficiencies or damage resulting from insufficiencies of existing systems, equipment or structures to accommodate performing the Work.

16.2 Protection Of Work, Persons, And Property

16.2.A. Contractor shall be responsible for initiating, maintaining and supervising all safety precautions and programs in connection with Work. Contractor shall comply with all safety requirements specified in any safety program established by Owner, or required by state, federal or local laws and ordinances. Contractor shall be responsible for all damage to Work, property or structures, and all injuries to persons either on the Site or constituting the Work (e.g., materials in transit), arising from the performance of Work of the Contract Documents from any cause.

16.2.B. Contractor shall comply with all applicable laws and regulations of any public body having jurisdiction for safety of persons or property or to protect them from damage, injury or loss; and shall erect and maintain all necessary safeguards for such safety and protection. Contractor shall notify owners of adjacent property and of Underground Facilities and utility owners when prosecution of the Work may affect them, and shall cooperate with them in the protection, removal, relocation and replacement of their property.

16.2.C. Contractor shall remedy all damage, injury or loss to any property referred to in paragraph 16.2.A of this Document 00700, caused, directly or indirectly, in whole or in part, by Contractor, any Subcontractor, supplier, or any other person or organization directly or indirectly employed by any of them to perform or furnish any Work or

anyone for whose acts any of them may be liable. Contractor's duties and responsibility for safety and for protection of Work shall continue until such time as all the Work is completed and Final Acceptance of the Work. Owner and its agents do not assume any responsibility for collecting any indemnity from any person or persons causing damage to Contractor's Work.

16.2.D. Contractor shall designate a qualified and experienced safety representative at the Site whose duties and responsibilities shall be the prevention of accidents and the maintaining and supervising of safety precautions and programs.

16.2.E. Owner may, at its option, retain such moneys due under the Contract Documents as Owner deems necessary until any and all suits or claims against Contractor for injury to persons or property shall be settled and Owner receives satisfactory evidence to that effect.

16.3 Responsibility For Safety And Health

16.3.A. Contractor shall ensure that its and each tier of Subcontractors' employees, agents and invitees comply with applicable health and safety laws while at the Site. These laws include the Occupational Safety and Health Act of 1970 and rules and regulations issued pursuant thereto, and Owner's safety regulations as amended from time to time. Contractor shall comply with all Owner directions regarding protective clothing and gear.

16.3.B. Contractor shall be fully responsible for the safety of its and its Subcontractors' employees, agents and invitees on the Site. Contractor shall notify Owner, in writing, of the existence of hazardous conditions, property or equipment at the Site that are not under Contractor's control. Contractor shall be responsible for taking all the necessary precautions against injury to persons or damage to the property of Contractor, Subcontractors or persons from recognized hazards until the responsible party corrects the hazard.

16.3.C. Contractor shall confine all persons acting on its or its Subcontractors' behalf to that portion of the Site where Work under the Contract Documents is to be performed, Owner-designated routes for ingress and egress thereto, and any other Owner-designated area. Except those routes for ingress and egress over which Contractor has no right of control, within such areas, Contractor shall provide safe means of access to all places at which persons may at any time have occasion to be present.

16.4 Emergencies

16.4.A. In emergencies affecting the safety or protection of persons or Work or property at the Site or adjacent thereto, Contractor, without special instruction or authorization from Owner, is obligated to act to prevent threat and damage, injury or loss, until directed otherwise by Owner. Contractor shall give Owner prompt written notice if Contractor believes that any significant changes in Work or variations from Contract Documents have been caused thereby. If Owner determines that a change in the Contract Documents is required because of the action taken by Contractor in response to such an emergency, a Change Order or Construction Change Directive will be issued to document the consequences of such action.

16.5 Use Of Roadways And Walkways

16.5.A. Contractor shall not unnecessarily interfere with use of any roadway, walkway or other facility for vehicular or pedestrian traffic. Before beginning any interference and

only with Owner's prior concurrence, Contractor may provide detour or temporary bridge for traffic to pass around or over the interference, which Contractor shall maintain in satisfactory condition as long as interference continues. Unless otherwise provided in the Contract Documents, Contractor shall bear the cost of these temporary facilities.

16.6 Nondiscrimination

16.6.A. No person or entity shall discriminate in the employment of persons upon public works because of race, religious creed, color, national origin, ancestry, physical disability, mental disability, medical condition, marital status, sexual preference, or gender of such persons, except as provided in Section 12940 of the Government Code. Every contractor for public works violating the provisions of Section 1735 of the Labor Code is subject to all the penalties imposed for a violation of Chapter 1, Part 7, Division 2 of the Labor Code. Contractor agrees to comply with the provisions of Chapter 19, Article II, of the Sonoma County Code prohibiting discrimination in housing, employment, and services because of AIDS or HIV infection during the term of this Contract and any extensions of the term.

16.7 Prevailing Wages

16.7.A. Contractor shall pay to persons performing labor in and about Work provided for in the Contract Documents an amount equal to or more than the general prevailing rate of per diem wages for (1) work of a similar character in the locality in which the Work is performed and (2) legal holiday and overtime work in said locality. The per diem wages shall be an amount equal to or more than the stipulated rates contained in a schedule that has been ascertained and determined by the Director of the State Department of Industrial Relations and Owner to be the general prevailing rate of per diem wages for each craft or type of workman or mechanic needed to execute this Contract. Contractor shall also cause a copy of this determination of the prevailing rate of per diem wages to be posted at each Site.

16.7.B. Contractor shall forfeit, as a penalty to Owner, Fifty Dollars ($50.00) for each laborer, workman, or mechanic employed in performing labor in and about the Work provided for in the Contract Documents for each Day, or portion thereof, that such laborer, workman or mechanic is paid less than the said stipulated rates for any Work done under the Contract Documents by him or her or by any Subcontractor under him or her, in violation of Articles 1 and 2 of Chapter 1 of Part 7 of Division II of the California Labor Code. The sums and amounts which shall be forfeited pursuant to this paragraph 16.7.B and the terms of the Labor Code shall be withheld and retained from payments due to Contractor under the Contract Documents, pursuant to this Document 00700 and the Labor Code, but no sum shall be so withheld, retained or forfeited except from the final payment without a full investigation by either the State Department of Industrial Relations or by Owner. The Labor Commissioner pursuant to Labor Code Section 1775 shall determine the final amount of forfeiture.

16.7.C. Contractor shall insert in every subcontract or other arrangement which Contractor may make for performance of Work or labor on Work provided for in the Contract, provision that Subcontractor shall pay persons performing labor or rendering service under subcontract or other arrangement not less than the general prevailing rate of per diem wages for work of a similar character in the locality in which the Work is

performed, and not less than the general prevailing rate of per diem wages for holiday and overtime work fixed in the Labor Code.

16.7.D. Contractor stipulates that it shall comply with all applicable wage and hour laws, including without limitation Labor Code Section 1813.

16.8 Environmental Controls

16.8.A. Contractor shall comply with all rules, regulations, ordinances, and statutes that apply to any Work performed under the Contract Documents including, without limitation, any toxic, water, storm water management, and soil pollution controls and air pollution controls specified in Government Code Section 11017. Contractor shall be responsible for insuring that Contractor's Employees, Subcontractors, and the public are protected from exposure to airborne hazards or contaminated water, soil, or other toxic materials used during or generated by activities on the Site or associated with the Project.

16.9 Shoring Safety Plan

16.9.A. Any conflict between this paragraph 16.9 and Division 2 of the Specifications shall be resolved in favor of the most stringent requirement.

16.9.B. At least five Days in advance of any excavation five feet or more in depth, Contractor shall submit to Owner a detailed plan showing the shoring, bracing and sloping design (including calculations) and other provisions to be made for worker protection from the hazard of caving ground during the excavation, as required by Labor Code Section 6705. A civil or structural engineer registered in California shall prepare and sign any plan that varies from the shoring system standards established by the State Construction Safety Orders.

16.9.C. During the course of Work, Contractor shall be responsible for determining where sloping, shoring, and/or bracing is necessary and the adequacy of the design, installation, and maintenance of all shoring and bracing for all excavation, including any excavation less than five feet in depth. Contractor will be solely responsible for any damage or injuries that may result from excavating or trenching. Owner's acceptance of any drawings showing the shoring or bracing design or Work schedule shall not relieve Contractor of its responsibilities under this paragraph 16.9.

16.9.D. Appoint a qualified supervisory employee who shall be responsible to determine the sloping or shoring system to be used depending on local soil type, water table, stratification, depth, etc.

END OF DOCUMENT

DOCUMENT 00800

SUPPLEMENTARY CONDITIONS

1. SUMMARY

A. This document includes requirements that supplement the paragraphs of Document 00700 (General Conditions).

2. SUPPLEMENTS

A. Supplement to paragraph 4.2:

4.2.A. Contractor - Required Insurance.

1. At or before the date specified in Document 00200 (Instructions to Bidders), Contractor shall furnish to Owner satisfactory proof that Contractor has obtained the following insurance as specified below:
   a. Workers' Compensation Insurance & Employers Liability Insurance.
      1) Workers' Compensation insurance with statutory limits as required by the Labor Code of the State of California.
      2) Employers Liability with limits of $1,000,000 per Accident; $1,000,000 Disease per employee; $1,000,000 Disease per policy.
      3) The policy shall be endorsed to include a written waiver of the insurer's right to subrogate against Owner.
      4) Required Evidence of Coverage:
         (a) Subrogation waiver endorsement, and
         (b) Certificate of Insurance.
      5) If injury occurs to any employee of Contractor, Subcontractor, or sub-subcontractor for which the employee, or the employee's dependents in the event of employee's death, is entitled to compensation from Owner under provisions of the Workers' Compensation Insurance and Safety Act (Act), as amended, or for which compensation is claimed from Owner, Owner may retain out of sums due Contractor under Contract Documents, amount sufficient to cover such compensation, as fixed by the Act, as amended, until such compensation is paid, or until it is determined that no compensation is due. If Owner is compelled to pay compensation, Owner may, in its discretion, either deduct and retain from the Contract Sum the amount so paid, or require Contractor to reimburse Owner.
   b. General Liability Insurance.
      1) Commercial General Liability Insurance on a standard occurrence form, no less broad than ISO form CG 00 01.
      2) Minimum Limits:
         (a) Projects under $1,000,000: $1,000,000 per Occurrence; $2,000,000 General Aggregate; $2,000,000 Products/Completed Operations Aggregate. The General Aggregate shall apply separately to each Project.
         (b) Projects from $1,000,000 - $4,999,999: $2,000,000 per Occurrence; $4,000,000 General Aggregate; $4,000,000 Products/Completed Operations Aggregate. The General Aggregate shall apply separately to each Project.

(c) Projects from $5,000,000 - $9,999,999: $5,000,000 per Occurrence; $5,000,000 General Aggregate; $5,000,000 Products/Completed Operations Aggregate. The General Aggregate shall apply separately to each Project.
(d) Projects $10,000,000 and Over: Minimum Limits: $10,000,000 per Occurrence; $10,000,000 General Aggregate; $10,000,000 Products/Completed Operations Aggregate. The General Aggregate shall apply separately to each Project.

3) Contractor shall disclose any deductible or self-insured retention in excess of $25,000 and such deductible or self-insured retention must be approved in advance by Owner. Contractor is responsible for any deductible or self-insured retention.
4) Coverage shall be maintained for the entire period of the Work plus the additional periods as specified below:
   (a) Projects under $1,000,000: One (1) year after Final Completion and acceptance of the final payment for the Work.
   (b) Projects from $1,000,000 - $4,999,999: Two (2) years after Final Completion and acceptance of the final payment for the Work.
   (c) Projects from $5,000,000 - $9,999,999: Three (3) years after Final Completion and acceptance of the final payment for the Work.
   (d) Projects $10,000,000 and Over: Five (5) years after Final Completion and acceptance of the final payment for the Work.
5) Owner and the Sonoma County Water Agency, their employees, representatives, consultants and agents, and Engineers shall be additional insureds for liability arising out of ongoing <u>and</u> completed operations by or on behalf of the Contractor in the performance of the Contract Documents. Contractor shall maintain completed operations coverage and continue Owner et al. as additional insureds for (5) years after completion of the Work under the Contract.
6) The policy definition of "insured contract" shall include assumptions of liability arising out of both ongoing operations and the products-completed operations hazard (broad form contractual liability coverage including the "f" definition of insured contract in ISO form CG 00 01, or equivalent).
7) The insurance provided to Owner et al. as additional insureds shall apply on a primary and non-contributory basis with respect to any insurance or self-insurance program maintained by Owner et al.
8) The policy shall not exclude injury or damage caused by, or resulting from, explosion, collapse and/or underground hazards, subsidence, mold or silica.
9) The policy shall not contain a Contractors' Warranty or other similar language which eliminates or restricts coverage because of a Subcontractor's failure to carry specific insurance or to supply evidence of such insurance.
10) The policy shall be endorsed to include a written waiver of the insurer's right to subrogate against Owner and the Sonoma County Water Agency, their employees, representatives, consultants and agents, and Engineers.

11) The policy shall cover inter-insured suits between Owner and Contractor and include a "separation of insureds" or "severability" clause which treats each insured separately.
12) Required Evidence of Coverage:
    (a) Additional insured endorsement or policy language granting additional insured status;
    (b) Endorsement or policy language indicating that coverage is primary and non-contributory; and
    (c) Certificate of Insurance.

c. Automobile Liability Insurance.
    1) Minimum Limits:
        (a) Projects under $1,000,000: $1,000,000 combined single limit per accident.
        (b) Projects $1,000,000 and Over: $2,000,000 combined single limit per accident.
    2) Coverage shall apply to all owned, hired, and non-owned vehicles.
    3) Owner shall qualify as an insured.
    4) Required Evidence of Coverage:
        (a) Endorsement or policy language indicating thatOwner and the Sonoma County Water Agency, their employees, representatives, consultants and agents, and Engineers, are insureds; and
        (b) Certificate of Insurance.

d. Contractors Pollution Liability Insurance.
    1) Minimum Limits:
        (a) Projects under $5,000,000: $1,000,000 per pollution Incident; $1,000,000 Aggregate; and
        (b) Projects $5,000,000 and Over: $2,000,000 per pollution Incident; $2,000,000 Aggregate.
    2) Contractor shall disclose any deductible or self-insured retention in excess of $25,000 and such deductible or self-insured retention must be approved in advance by Owner. Contractor is responsible for any deductible or self-insured retention.
    3) If the insurance is on a Claims-Made basis, the retroactive date shall be no later than the commencement of Work.
    4) Coverage shall be maintained for the entire period of the Work plus the additional periods as specified below:
        (a) Projects under $1,000,000: One (1) year after Final Completion and acceptance of the final payment for the Work.
        (b) Projects from $1,000,000 - $4,999,999: Two (2) years after Final Completion and acceptance of the final payment for the Work.
        (c) Projects from $5,000,000 - $9,999,999: Three (3) years after Final Completion and acceptance of the final payment for the Work.
        (d) Projects $10,000,000 and Over: Five (5) years after Final Completion and acceptance of the final payment for the Work.
    5) If the insurance is on a Claims-Made basis, the continuation coverage may be provided by: (a) renewal of the existing policy; (b) an extended reporting period endorsement; or (c) replacement insurance with a retroactive date no later than the commencement of the Work.

6) Owner and the Sonoma County Water Agency, their employees, representatives, consultants and agents, and Engineers shall be additional insureds for liability arising out of operations by or on behalf of the Contractor in the performance of the Contract Documents.
7) The insurance provided to Owner et al. as additional insureds shall apply on a primary and non-contributory basis with respect to any insurance or self-insurance program maintained by Owner et al.
8) Required Evidence of Coverage:
   (a) Additional insured endorsement or policy language granting additional insured status;
   (b) Endorsement or policy language indicating that coverage is primary and non-contributory; and
   (c) Certificate of Insurance.

e. Professional Liability Insurance:
   1) Minimum Limit: $1,000,000.
   2) Contractor shall disclose any deductible or self-insured retention in excess of $25,000.
   3) If the insurance is on a Claims-Made basis, the retroactive date shall be no later than the commencement of the Work.
   4) Coverage applicable to the Work performed under the Contract shall be continued for two (2) years after completion of the Work. Such continuation coverage may be provided by one of the following: (a) renewal of the existing policy; (b) an extended reporting period endorsement; or (c) replacement insurance with a retroactive date no later than the commencement of the Work.
   5) Required Evidence of Coverage:
      (a) Certificate of Insurance.

f. Increase of Minimum Limits.
   1) Required minimum amounts of insurance may be increased should conditions of Work, in opinion of Owner, warrant such increase. Contractor shall increase required insurance amounts upon direction by Owner.

g. Standards for Insurance Companies.
   1) Insurers, other than the California State Compensation Insurance Fund, shall have an A.M. Best's rating of at least A:VII.

h. Documentation.
   1) The Certificate of Insurance shall include the following reference: North Bay Water Reuse Program – Sonoma Valley Effluent Reservoir R5.
   2) Contractor agrees to maintain current Evidence of Coverage on file with Owner for the required period of insurance. Any requirement to maintain insurance after Final Completion of the Work, including providing Certificates evidencing required coverage(s), shall survive the Contract.
   3) The name and address for Additional Insured endorsements and Certificates of Insurance is: Sonoma Valley County Sanitation District, c/o Sonoma County Water Agency, 404 Aviation Boulevard, Santa Rosa, CA 95403-9019.

4) Required Evidence of Coverage shall be submitted for any renewal or replacement of a policy that already exists, at least ten (10) days before expiration or other termination of the existing policy.
5) Contractor shall provide immediate written notice if: (a) any of the required insurance policies is terminated; (b) the limits of any of the required policies are reduced; or (c) the deductible or self-insured retention is increased.
6) Upon written request, certified copies of required insurance policies must be provided within thirty (30) days.

i. Material Breach.
1) If Contractor fails to maintain insurance coverage which is required pursuant to the Contract Documents, it shall be deemed a material breach. Owner, at its sole option, may terminate the Contract for default and obtain damages from Contractor resulting from said breach. Alternatively, Owner may purchase the required insurance coverage, and without further notice to Contractor, Owner may deduct from sums due to Contractor any premium costs advanced by Owner for such insurance. These remedies shall be in addition to any other remedies available to Owner under the Contract Documents or Law.

4.2.B. <u>Subcontractors - Required Insurance.</u>

1. With respect to their portion of the Work, Subcontractors of all tiers shall maintain the same insurance required to be maintained by Contractor with limits as follows:
   a. Minimum General Liability Limits for Framing, Mechanical, and Electrical Subcontractors.
      1) Projects under $1,000,000: $1,000,000 per Occurrence; $2,000,000 General Aggregate; $2,000,000 Products/Completed Operations Aggregate. The General Aggregate shall apply separately to each Project.
      2) Projects $1,000,000 and Over: $2,000,000 per Occurrence; $4,000,000 General Aggregate; $4,000,000 Products/Completed Operations Aggregate. The General Aggregate shall apply separately to each Project.
   b. Minimum General Liability Limits for all Subcontractors other than Framing, Mechanical, and Electrical Subcontractors.
      1) $1,000,000 per Occurrence; $2,000,000 General Aggregate; $2,000,000 Products/Completed Operations Aggregate. The General Aggregate shall apply separately to each Project.
   c. Minimum Automobile Liability Limits: $1,000,000 combined single limit per accident.
   d. Minimum Employers Liability Limits: $1,000,000 per Accident; $1,000,000 Disease per employee; $1,000,000 Disease per policy.
   e. Professional Liability Insurance.
      1) Minimum Limit: $1,000,000.
      2) Contractor shall disclose any deductible or self-insured retention in excess of $25,000.
      3) If the insurance is on a Claims-Made basis, the retroactive date shall be no later than the commencement of the Work.
      4) Coverage applicable to the Work performed under the Contract shall be continued for two (2) years after completion of the Work. Such

continuation coverage may be provided by one of the following: (a) renewal of the existing policy; (b) an extended reporting period endorsement; or (c) replacement insurance with a retroactive date no later than the commencement of the Work.

5) Required Evidence of Coverage:
   (a) Certificate of Insurance.

4.2.C. Builder's Risk.

1. With respect to Work under this Contract, Owner shall maintain "All-Risk" Course of Construction insurance as follows:
   a. Insured Property shall include: (1) Real property in Course of Construction; (2) building materials and supplies intended to be in or on the completed Work located at the Site, in storage or in transit, and whether or not owned or paid for by Owner; (3) fixtures and machinery intended to be in or on the completed Work; (4) scaffolding, cribbing, fencing, forms and temporary trailers, while located on the Site, in storage or in transit.
   b. Limit of insurance: Full Contract value.
   c. Deductibles for claims against this coverage will not exceed $50,000. Responsibility for paying deductibles is as follows:

Contract Value or Description	**Contractor's Responsibility for Deductible**	**Owner's Responsibility for Deductible**
Job Order Contract (JOC) - $1,000,000	First $5,000	Balance of Deductible
Job Order Contract (JOC) - $2,000,000 - $5,000,000	First $10,000	Balance of Deductible
Full Contract Value under $1,000,000 other than JOC	First $5,000	Balance of Deductible
Full Contract Value: $1,000,000 - $9,999,999, other than JOC	First $10,000	Balance of Deductible
Full Contract Value: $10,000,000 - $19,999,999, other than JOC	First $25,000	Balance of Deductible
Full Contract Value: $20,000,000 and above, other than JOC	First $30,000	Balance of Deductible

   d. Contractor and all Subcontractors of all tiers shall be additional insureds.
   e. Excluded property: Equipment, tools, and personal effects belonging to Contractor or Subcontractors of all tiers.
   f. Insured perils: All Risks of Direct Physical Damage or Loss, including flood and, for scheduled locations, earthquake, except as excluded.
   g. Exclusions may include, but are not limited to:

1) Loss due to wear and tear, moth, vermin, termites, insects, latent defects, gradual deterioration, wet or dry rot, rust, corrosion, erosion or normal settling, shrinkage and/or expansion of buildings or foundations.
2) Loss or damage due to contaminants and/or pollutants. However, fire losses arising directly or indirectly from pollutants or contaminants are covered.
3) Loss of use or occupancy or consequential loss.
4) Liquidated damages and/or penalties for delay or detention in connection with guarantees of performance or efficiency.
5) Loss or damage caused by or resulting from infidelity or dishonesty on the part of any insured or the employees or agents of any insured.
6) Inventory shortage or unexplained disappearance.

h. A copy of Owner's Course of Construction Insurance, including all policy coverages, conditions and exclusions, shall control in the event of any conflict with the language of this Paragraph 4.2. Upon request, Owner will provide a Certificate of Property Insurance.

END OF DOCUMENT

DOCUMENT 00805

SUPPLEMENTARY CONDITIONS - HAZARDOUS MATERIALS

1. SUMMARY

A. This Document 00805 includes requirements that supplement the paragraphs of Document 00700 (General Conditions) as they apply to location, removal, remediation, disposal, and abatement of hazardous materials and hazardous waste.

2. SUPPLEMENTS

A. Supplement to paragraph 2.1, Investigation Prior to Bidding
   1. Add a new paragraph that reads:
      2.1B.4. Information Shown in Hazardous Materials Documentation for Informational Purposes: Reference is made to Document 00335 (Hazardous Materials Documentation) for hazardous material documentation included with the Contract Documents and use of data therein. These documents are not Contract Documents and, except for any "technical data" regarding the location of hazardous materials, as limited in Document 00335 (Hazardous Materials Documentation), Contractor shall not in any manner rely on the information in these documents. Subject to the foregoing, Contractor shall make its own independent investigation of all conditions affecting the Work and shall not rely on information provided by Owner.

B. Supplement to paragraph 5.7, Precedence of Documents
   1. Add a new paragraph that reads:
      5.7.E Should any provision or requirement of any Contract Document conflict with another provision or requirement in the Contract Documents on subject matters of hazardous waste abatement, clean up, disposal, or required safety standards or methods, then the most stringent provision or requirement shall control.

C. Supplement to paragraph 7.2, Means and Methods of Construction
   1. Add a new paragraph that reads:
      7.2.B Nothing contained in these Contract Documents or inferable therefrom shall be deemed or construed to:
         1) Make Contractor the agent, servant, or employee of Owner; or
         2) Create any partnership, joint venture, or other association between Owner and Contractor.

D. Supplement to paragraph 8, Control of the Work
   1. Add new paragraphs that read:
      8.2.F Owner shall exercise administration on Contract Documents. If Owner has employed a HazMat Consultant, Owner reserves the right to assign or delegate to this consultant, or any other consultant, any or all Engineer's responsibilities under Contract Documents or alternatively to act as Owner's Representative. Contractor will be notified in writing of any such delegation.
      8.2.G Cooperate with HazMat Consultant as directed by Owner. HazMat Consultant's duties may include observing Contractor's health and safety program and practices, observing the abatement construction activities, observing the extent of material removed from each job Site, reviewing payment requests, reviewing reports required by governmental or quasi-governmental agencies or Contract Documents, and providing clearance tests after abatement is completed. No

action, omission to act, approval, or failure to advise Contractor as to any matter by HazMat Consultant shall in any way relieve Contractor from its responsibility for the performance of Work in accordance with Contract Documents and applicable law. Unless directed otherwise in writing by Owner, do not communicate directly with HazMat Consultant and direct all communications to Owner.

E. Supplement to paragraph 9, Warranty, Guaranty, and Inspection of Work

1. Add to the end of paragraph 9.1 the following additional representations and warranties:

9.1.D Additional Warranties and Representations:

1) Contractor represents and warrants that it, its employees and its Subcontractors and their employees, shall at all times have the required levels of familiarity with the Site and the Work, training and ability to comply fully with all applicable law and Contract Documents requirements for safe and expeditious performance of the Work, including whatever training is or may be required regarding the activities to be performed (including, but not limited to, all training required to adequately address the actual or potential dangers of Contract performance).
2) Contractor represents and warrants that it, its employees and its subcontractors and their employees, shall at all times have and maintain in good standing any and all certifications and licenses required by applicable federal, state, and other governmental and quasi-governmental requirements applicable to the Work.
3) Contractor represents and warrants that it has studied carefully all requirements of the Contract Documents regarding procedures for demolition, hazardous waste abatement, or safety practices, specified in the Contract Documents, and prior to submitting its Bid, has either:
   (a) Verified to its satisfaction that the specified procedures are adequate and sufficient to achieve the results intended by Contract Documents; or
   (b) By way of approved "or equal" request or request for clarification and written Addenda, secured changes to the specified procedures sufficient to achieve the results intended by Contract Documents.
4) Contractor accepts the risk that any specified procedure will result in a completed Project in full compliance with all Contract Documents requirements.

2. Add a new paragraph to paragraph 9.6 that reads:

9.6.B Owner reserves the right, in its sole discretion, to conduct air monitoring, earth monitoring, Work monitoring, and any other tests (in addition to testing required under Document 00520 [Agreement] or applicable Law), to monitor Contract requirements of safe and statutory compliant work methods and (where applicable) safe re-entry level air standards under state and federal Law upon completion of the Work, and compliance of the Work with periodic and final inspection of public and quasi-public entities having jurisdiction.

1) Contractor acknowledges that Owner also has the right to perform, or cause to be performed, various activities and tests including, but not limited to, pre-abatement, during abatement and post-abatement air monitoring, provided that Owner shall have no obligation to perform said activities and tests, and that a portion of said activities and tests may take place prior to the

completion of Work by Contractor. In the event Owner elects to perform these activities and tests, afford Owner ample access to the Site and all areas of the Work as may be necessary for the performance of these activities and tests. Include the potential impact of these activities for tests by Owner in the Contract Sum and the scheduled completion date.

2) Notwithstanding Owner's rights granted by this paragraph 9, Contractor may be required to retain its own industrial hygiene consultant and shall have primary responsibility for collecting samples and performing all applicable, relevant, or appropriate activities and tests including, but not limited to, pre-abatement, during abatement, and post-abatement air monitoring, required by Contract Documents, applicable Law, or both, and Owner reserves the right to request documentation of all such activities and tests performed by Contractor relating to Work.

F. Supplement to paragraph 11.2, Cost Data

1. Add new paragraphs that read:

11.2.E Obtain and maintain and furnish to Owner on completion of Work or at any other time requested by Owner, all necessary permits, licenses, approvals, authorizations, notifications, training certificates, respirator certificates, reports, correspondence, tests results, air monitoring certificates, forms, medical records, medical certificates, notes and photographs of Work conditions, approved shipping and disposal facility receipts, manifests, and all other documentation required by Contract Documents or applicable Law, or both.

11.2.F Provide Owner with copies of each such document as it is generated and, as a condition to final payment, provide Owner with a complete set of such documents (bound, organized, and indexed) at the conclusion of Work. Keep and maintain in retrievable files true and correct copies of all such documents for a period of not less than 30 years after Final Completion of the Work. Owner shall have the right to inspect or photocopy these records and, if Contractor should cease business operations, then it shall furnish these records to Owner.

G. Supplement to paragraph 13, Legal and Miscellaneous

1. Add new paragraphs to the end of paragraph 13.1 that read:

13.1.C Compliance with Laws. Contractor represents that it is familiar with and shall comply with all Laws applicable to the Work or completed Work including, but not limited to all Laws relating to:

1) Protection of the public health, welfare, and environment;
2) Generation, processing, treatment, handling, storage, transport, disposal, destruction, or other management of Asbestos, PCB, lead, petroleum-based products, or other hazardous materials of any kind; or
3) Protection of environmentally sensitive areas such as wetlands.

13.1.D Disposal. Contractor has the sole responsibility for determining current waste storage, handling, and transportation and disposal regulations for the Site and for each waste disposal facility. Contractor shall comply fully at Contractor's sole cost and expense with these regulations and any applicable Law. Owner may, but is not obligated to, require submittals with this information for it to review consistent with Contract Documents.

13.1.E Tracking. Contractor shall develop and implement a system acceptable to Owner to track hazardous waste from the Site to disposal, including appropriate "Hazardous Waste Manifests" on the applicable EPA form, so that Owner may

track the volume of waste Contractor puts in each landfill and receive from each landfill a certificate of receipt.

13.1.F Facilities. Contractor shall provide Owner with the name and address of each waste disposal facility prior to any disposal, and Owner shall have the express right to reject any proposed disposal facility. Contractor may not use any disposal facility to which Owner has objected. Contractor shall document actual disposal or destruction of waste at a designated facility by completing a disposal certificate or certificate of destruction and forwarding the original to the Contractor (with a copy to Owner).

2. Add new paragraphs to 13.2 that read:

13.2.B Before performing any of the Work, and at such other times as may be required by applicable Law, deliver all requisite notices and obtain the approval of all governmental and quasi-governmental authorities having jurisdiction over the Work. Submit evidence satisfactory to Owner that Contractor and any disposal facility (a) have obtained all required permits, approvals and the like in a timely manner both prior to commencement of the Work and thereafter as and when required by applicable Law, and (b) are in compliance with all such permits, approvals and the like. For example, before commencing any work in connection with the Work involving Asbestos-containing materials or PCB subject to regulation, Contractor shall provide the required notice of intent to renovate or demolish to the appropriate state or federal agency having jurisdiction, by certified mail, return receipt required, or by some other method of transmittal for which a return receipt is obtained, and to send a copy of that notice to Owner. Contractor shall not conduct any Work involving Asbestos-containing materials or PCB unless Contractor has first confirmed that the appropriate agency having jurisdiction is in receipt of the required notification. All permits, licenses, and bonds required by governmental or quasi-governmental authorities, fees, deposits, tap fees, Off Site easements, and Asbestos and PCB disposal facilities necessary for the prosecution of the Work shall be procured and paid for by Contractor. Contractor shall give all notices and comply with the Law bearing on the conduct of the Work as drawn and specified. If Contractor observes or reasonably should have observed that Drawings and Specifications and other Contract Documents are at variance therewith, it shall be responsible for promptly notifying Owner in writing of such fact. If Contractor performs any Work contrary to Law without such notice to Owner, Contractor shall bear all costs arising therefrom.

13.2.C In the case of any permits or notices held in Owner's name or of necessity to be made in Owner's name, Owner will cooperate with Contractor in securing the permit or giving the notice, but Contractor shall prepare for Owner's review and execution upon approval, all necessary applications, notices, and other materials.

3. Add a new paragraph to paragraph 13.3 that reads:

13.3.G To the greatest extent permitted by Law, the indemnities and limitation of liability expressed throughout the Contract Documents apply with equal force and effect to any claims or liabilities imposed or existing by virtue of the removal, abatement, and disposal of hazardous waste. This includes liabilities connected to the selection and use of a waste disposal facility, personal injury, property damage, loss of use of property, damage to the environment or natural

resources, or "disposal" and "release" of materials associated with the Work (as defined in 42 U.S.C. Section 9601 *et seq*).

4. Add a new paragraph following paragraph 13.7.F that reads:

13.7.G Notwithstanding anything in paragraph 13.7 to the contrary, Owner shall have an absolute right to terminate for default immediately without notice and without an opportunity to cure should Contractor knowingly or recklessly commit a material breach of the terms of the Contract Documents or the Law on any matter involving the exposure of persons or property to hazardous waste. If the breach exposing persons or property to hazardous waste is due solely to an ordinary, unintentional and non-reckless failure to exercise reasonable care, then the procedures in paragraph 13.7 for termination for default shall apply without modification.

H. Supplement to paragraph 16.2, Protection of Work, Persons, and Property

1. Add a new paragraph that reads:

16.2.F Perform safe, expeditious, and orderly work in accordance with the best practices and the highest standards in the hazardous waste abatement, removal, and disposal industry, the Law (as herein defined), and the Contract Documents including, but not limited to, all responsibilities relating to the preparation and return of waste shipment records, all requirements of the Law, delivering of all requisite notices, and obtaining all necessary governmental and quasi-governmental approvals.

END OF DOCUMENT

DOCUMENT 00910

ADDENDA

NORTH BAY WATER REUSE PROGRAM -
SONOMA VALLEY EFFLUENT RESERVOIR R5

[DOCUMENT TO BE COMPLETED AS ADDENDA DURING BID PERIOD]

END OF DOCUMENT

SPECIFICATIONS

DIVISION 1

GENERAL REQUIREMENTS

SECTION 01100

SUMMARY

PART 1 GENERAL

1.1 SUMMARY

A. Section includes:
   1. Summary of Work and Work Restrictions including:
      a. Summary
      b. Work Covered By Contract Documents
      c. Bid Items, Allowances, and Alternates
      d. Work Under Other Contracts
      e. Future Work
      f. Work Sequence
      g. Work Days and Hours
      h. Shutdown for Discovery of Cultural Resources
      i. Cooperation of Contractor and Coordination with Other Work
      j. Partial Occupancy/Utilization Requirements
      k. Contractor Use of Site
      l. Air Quality Standards
      m. Construction Staking and Monument Protection
      n. Permits
      o. Work on Wastewater Treatment Facilities
      p. Rights-of-Way
      q. Document Tracking
      r. Products Ordered In Advance
      s. Owner-Furnished Products

1.2 WORK COVERED BY CONTRACT DOCUMENTS

A. Work comprises construction of Owner's recycled water storage reservoir to the north of the Sonoma Valley County Sanitation District Wastewater Treatment Plant (WWTP), in an unincorporated area of Sonoma County outside the limits of the City of Sonoma, California. Work includes, without limitation, construction of a recycled water storage reservoir lined with a high-density polyethylene (HDPE) liner; inlet, outlet, overflow piping, concrete pumping station, and pump; 18-inch recycled water pipeline; and electrical and telemetry work to connect the reservoir into the WWTP and recycled water system. Contract Documents fully describe the Work.

B. The Work of this Contract comprises construction of all the Work indicated, described in the Specifications, or otherwise required by the Contract Documents.

C. Unless provided otherwise in the Contract Documents, all risk of loss to Work covered by Contract Documents shall rest with Contractor until Final Acceptance of the Work.

D. Cost of maintenance of systems and equipment prior to Final Acceptance will be considered as included in prices Bid and no direct or additional payment will be made therefor.

1.3 BID ITEMS, ALLOWANCES, AND ALTERNATES

A. Any Bid item may be deleted from the Work and Contract Sum, in total or in part, prior to or after award of Contract without compensation in any form or adjustment of other Bid items or prices therefore.

B. Payment of all items is subject to provisions of Contract Documents, including without limitation Section 01200 (Price and Payment Procedures).
C. For all Bid items, furnish and install all Work, including connections to existing systems, indicated and described in Specifications and all other Contract Documents. Work and requirements applicable to each individual Bid item, or unit of Work, shall be deemed incorporated into the description of each Bid item (whether Lump Sum or Unit Price).
D. Bid item descriptions (listed by Bid item number):
   1. Bonds. The lump sum price paid under this item shall be full payment for furnishing bonds as required by Document 00700 (General Conditions).
   2. Insurance. The lump sum price paid under this item shall be full payment for furnishing insurance as required by Document 00700 (General Conditions).
   3. Safety Program and Implementation. The lump sum price paid under this item shall be full payment for furnishing and implementing the Safety Program as required by Section 01540 (Site Security and Safety) and Document 00700 (General Conditions).
   4. Construction Material Waste Management Plan and Implementation. The lump sum price paid under this item shall be full payment for furnishing and implementing the Construction Material Waste Management Plan as required by Section 01741 (Construction Material Waste Management Plan).
   5. Installation, Operation, and Maintenance Manuals. The lump sum price paid under this item shall be full payment for furnishing installation, operation, and maintenance manuals as required by Section 01330 (Submittal Procedures).
   6. Storm Water Pollution Prevention Plan and Implementation. The lump sum price paid under this item shall be full payment for furnishing and implementing the Storm Water Pollution Prevention Plan as required by Section 01500 (Temporary Facilities and Controls).
   7. Mobilization/Demobilization. The lump sum price paid under this item shall be full payment for initial mobilization at Project commencement (50% to be paid then), and cleanup and demobilization at Final Completion (50% to be paid then).
   8. Clearing and Grubbing. The lump sum price paid under this item shall be full payment for stripping, clearing, grubbing, removal, and disposal of excavated materials required for construction of Project.
   9. Earthwork. The lump sum price paid under this item shall be the full payment for furnishing and implementing the Earthwork Plan, Dewatering Plan, and Asbestos Cement Pipe Disposal Plan; removing existing irrigation piping; Site grading; and constructing reservoir embankments and access ramps including inspection trenching, and import and export materials, as required. Note: A portion of the existing irrigation piping may be asbestos cement pipe.
   10. Overexcavation. The unit price paid under this item shall be full payment for overexcavation, fill, and recompaction required by loose or clayey soils beneath the reservoir embankments. For the purposes of payment, this item will be measured by the cubic yard of overexcavated material. A survey of the Site of the specified work will be made after excavation is completed. The ground surface as determined by this survey will form the basis of measurement of all required overexcavation. Measurements for payment for required overexcavation will be made between the ground surface, determined by the above mentioned survey, and actual overexcavation made and computed by a survey of overexcavated areas.

11. Geogrid Road. The unit price paid under this item shall be the full payment for geogrid road around reservoir, on access ramps, and on access roads to the reservoir. For the purposes of payment, this item will be measured by the square foot of geogrid road as indicated.
12. High-Density Polyethylene Liner. The unit price paid under this item shall be the full payment for high-density polyethylene liner for reservoir. For the purposes of payment, this item will be measured by the square foot of high-density polyethylene liner installed.
13. Liner Appurtenances. The lump sum price paid under this item shall be full payment for ballast tubes, safety ladders, liner vents, liner connections at penetrations and edges, and any other appurtenances and attachments as indicated.
14. Chain Link Fence and Gates. The unit price paid under this item shall be the full payment for chain link fence around the reservoir and access gates. For the purposes of payment, this item will be measured by the linear foot of chain link fence and gates.
15. Drainage Improvements. The lump sum price paid under this item shall be full payment for drainage concrete swale around the reservoir, 12-inch culvert, culvert flared ends, associated grading, and any other necessary permanent drainage improvements.
16. Revegetation and Landscaping. The lump sum price paid under this item shall be full payment for hydroseed revegetation and landscaping.
17. Reservoir Inlet Structure. The lump sum price paid under this item shall be full payment for concrete inlet structure, including inlet gate, trash rack, gate stem guide, concrete structure, and piping connection for reservoir inlet pipe.
18. Reservoir Overflow Structure. The lump sum price paid under this item shall be full payment for concrete overflow structure, pre-cast vault for overflow outlet, and piping connections.
19. 24-Inch Reservoir Inlet Pipe. The unit price paid under this item shall be the full payment for 24-inch reservoir inlet pipe, as indicated, including trenching and backfilling, surface restoration, and pressure testing. For the purposes of payment, this item will be measured by the linear foot of 24-inch reservoir inlet pipe along the longitudinal axis, with 10% (in addition to any other retention) to be retained and paid after testing.
20. 4-Inch Reservoir Inlet Pipe. The unit price paid under this item shall be the full payment for 4-inch reservoir inlet pipe, as indicated, including trenching and backfilling, surface restoration, and pressure testing. For the purposes of payment, this item will be measured by the linear foot of 4-inch reservoir inlet pipe along the longitudinal axis, with 10% (in addition to any other retention) to be retained and paid after testing.
21. 18-Inch Watmaugh Export Pipe. The unit price paid under this item shall be the full payment for 18-inch Watmaugh export pipe and appurtenances, as indicated, including fittings, valves, valve boxes, tracer wire, metallic warning tape, trenching and backfilling, surface restoration, and pressure testing. For the purposes of payment, this item will be measured by the linear foot of 18-inch Watmaugh export pipe along the longitudinal axis, with 10% (in addition to any other retention) to be retained and paid after testing.
22. 24-Inch Overflow Pipe. The unit price paid under this item shall be the full payment for 24-inch overflow pipe, as indicated, including trenching and backfilling, surface restoration, and pressure testing. For the purposes of payment, this item will be measured by the linear foot of 24-inch overflow pipe, along the longitudinal axis, with 10% (in addition to any other retention) to be retained and paid after testing.

23. 3W System Connection for 4-Inch Reservoir Inlet Pipe. The lump sum price paid under this item shall be full payment for connecting to the existing 3W system, the concrete pad, valves, fittings, flowmeter, above ground piping and pipe supports, and underground piping including trenching and backfilling, surface restoration, and pressure testing.
24. Export Pumping Station. The lump sum price paid under this item shall be full payment for export pumping station structure; pumping station slide gate; pumping station wingwalls; concrete pad beneath the pump and discharge piping; 8-inch recycled water recirculation piping and appurtenances, as indicated, including trenching and backfilling, surface restoration, and pressure testing; aluminum guardrails; and bollards.
25. Chemical Feed Provisions. The lump sum price paid under this item shall be full payment for providing chemical feed area concrete pad, chemical conduits, PVC piping, and bollards.
26. Recycled Water Pump. The lump sum price paid under this item shall be full payment for providing vertical turbine pump, discharge piping, valves, self-cleaning strainer, drain piping, and associated appurtenances.
27. Electrical. The lump sum price paid under this item shall be full payment for electrical Work, including providing all electrical equipment, level transmitter, conduit, wiring, motor control center, motor operators, flow meters, concrete pads for electrical equipment, canopy for electrical equipment, PLC connections, and bollards.
28. Project Funding Sign. The unit price paid under this item shall be full payment for proving the Project Identification Sign, complete in place. For purposes of payment, this item shall be measured by the unit.
29. All Other Work. The lump sum price paid under this item shall be full payment for all Work of Contract Documents other than Work separately provided for under other Bid items.

E. Contingency Reserve.
   1. Costs authorized to be paid from the Contingency Reserve:
      a. Cost to Contractor or Subcontractor for removal, as directed by Owner, of unforeseen underground manmade structures that interfere with construction and that require special equipment or additional labor, time, or equipment.
      b. Cost to Contractor or Subcontractor for relocation or repair, as directed by Owner, of unforeseen underground utilities.

F. Allowances: (N/A)

G. Alternates: (N/A)

1.4 WORK UNDER OTHER CONTRACTS

A. Separate contractors may be on Site performing work for other projects.

1.5 FUTURE WORK

A. Project will be used to store recycled water for Owner's North Bay Water Reuse Program - Sonoma Valley County Sanitation District Effluent Pumping Upgrade project. The 18-inch Watmaugh export pipe installation is the first phase of a multi-phase implementation. Contractor shall make provisions to accommodate future connections at the terminus of the pipeline alignment

B. Chemical feed pumps, storage totes, and control equipment to be completed by Owner.

1.6 WORK SEQUENCE

A. Construct Work in stages and at times to accommodate Owner operation requirements during the construction period; coordinate construction schedule and operations with Owner.

1.7 WORK DAYS AND HOURS

A. Work Days and hours: Monday-Friday inclusive, 7:00 a.m.-5:00 p.m. local time.
B. Owner's Board has mandated 5 days of Mandatory Time Off during the 2011-2012 fiscal year. Owner will provide notice to Contractor, if applicable, of MTO dates and Work will not be permitted on those Days.
C. Work at the Site on weekends, holidays, or at night is not permitted, unless Contractor requests otherwise from Owner in writing at least 48 hours in advance and Owner approves in its sole discretion.
D. Contractor will not be permitted to schedule utility shutdowns on Fridays.

1.8 SHUTDOWN FOR DISCOVERY OF CULTURAL RESOURCES

A. If discovery is made of items of historical, archaeological, or paleontological interest, immediately cease all Work within 50 feet of the discovery. Archaeological indicators may include, but are not limited to, dwelling sites, locally darkened soils, stone implements or other artifacts, fragments of glass or ceramics, animal bones, human remains, and fossils.
B. The term "human remains" includes but is not limited to human bones, bone fragments, funerary objects, grave goods, and animals, as well as ashes and other remnants of burning ceremonies.
C. No pictures may be taken of the human remains.
D. After cessation of excavation, immediately contact Owner. Do not resume Work until authorization is received from Owner. When resumed, excavation or other activities shall be as directed by Owner.

1.9 COOPERATION OF CONTRACTOR AND COORDINATION WITH OTHER WORK

A. Coordinate with Owner and any Owner forces, or other contractors and forces, as required by Document 00700 (General Conditions), Article 6.
B. Employ a full-time coordinator to constantly review Contract Documents, submittals, changes, and prepare overlay drawings as necessary to avoid conflicts, errors, omissions and untimely construction.

1.10 PARTIAL OCCUPANCY/UTILIZATION REQUIREMENTS

A. Allow Owner to take possession of and use any completed or partially completed portion of the Work during the progress of the Work as soon as is possible without interference to the Work.
B. Possession, use of Work, and placement and installation of equipment by Owner shall not in any way evidence the completion of the Work or any part of it.
C. Contractor shall not be held responsible for damage to the occupied part of the Work resulting from Owner occupancy.
D. Make available, in areas occupied, on a 24-hour per day and 7-day per week basis if required, any utility services, heating, and cooling in condition to be put in operation at the time of occupancy.
    1. Responsibility for operation and maintenance of said equipment shall remain with Contractor.

2. Make, and Owner shall certify, an itemized list of each piece of equipment so operated with the date operation commences.
3. Itemized list noted above shall be basis for commencement of warranty period for equipment.
4. Owner shall pay for utility cost arising out of occupancy by Owner during construction.

E. Use and occupancy by Owner prior to acceptance of Work does not relieve Contractor of its responsibility to maintain insurance and bonds required under the Contract until entire Work is completed and accepted by Owner.

F. Prior to date of Final Acceptance of the Work by Owner, all necessary repairs or renewals in Work or part thereof so used, not due to ordinary wear and tear, but due to Defective materials or workmanship or to operations of Contractor, shall be made at expense of Contractor, as required in Document 00700 (General Conditions).

G. Use by Owner of Work or part thereof as contemplated by this Section 01100 shall in no case be construed as constituting acceptance of Work or any part thereof. Such use shall neither relieve Contractor of any responsibilities under Contract, nor act as waiver by Owner of any of the conditions thereof.

H. Owner may specify in the Contract Documents that portions of the Work, including electrical and mechanical systems or separate structures, shall be substantially completed on dates described in paragraph 1.6 of this Section 01100, if any, prior to Substantial Completion of all of the Work. Notify Owner in writing when Contractor considers any such part of the Work ready for its intended use and Substantially Complete and request Owner to issue a Certificate of Substantial Completion for that part of the Work.

1.11 CONTRACTOR USE OF SITE

A. Confine operations at Site to areas permitted by Contract Documents, permits, ordinances, and laws.
B. Do not unreasonably encumber Site with materials or equipment.
C. Assume full responsibility for protection and safekeeping of products stored on premises.
D. Move any stored products that interfere with operations of Owner or other contractor.
E. Coordinate parking, storage, staging, and Work areas with Owner.
F. Do not store construction materials in the Drip line of any tree.
G. Access is available to the Site from 8th Street East along the route indicated.
H. Keep Sasaki Access Road, as indicated, open and unobstructed during construction.
I. Owner will provide a combination lock to Contractor. Insert lock in series and ensure that the entrance is locked at the end of each work day and at other times as may be necessary to control unauthorized entry.
J. Contractor shall contact Owner at least 2 Business Days prior to entering the building and performing Work to allow Owner to arrange access into the building.

1.12 AIR QUALITY STANDARDS

A. Ensure that idling time for all heavy equipment is minimized to reduce on-Site emissions.
B. Maintain equipment in good mechanical condition.
C. Cover trucks hauling dirt.
D. Limit dust emissions during periods of high winds (greater than 15 miles per hour).
E. Replace ground cover in disturbed areas as soon as possible.
F. Enclose, cover, water, or apply soil binders to exposed stockpiles.
G. Remove earth tracked onto neighboring paved roads at least once daily.

H. Limit equipment speed to 10 miles per hour in unpaved areas.
I. Off road engines greater than 50 horsepower shall, at a minimum, meet Tier 2 emissions standards. When available, higher Tier engines shall be utilized.

1.13 CONSTRUCTION STAKING AND MONUMENT PROTECTION

A. Owner will perform construction surveying (staking) and other surveying, mapping, or computational activities that Owner deems necessary in its sole judgment, including that which may be used by the Owner to determine pay quantities, or other elements required by or provided for in the Contract Documents.
B. Contractor shall be responsible at its sole expense and direction for construction layout activities (as defined by Owner in its sole and exclusive judgment) and any surveying and/or mapping activities beyond that which will be performed by Owner in accordance with Paragraph A above, including that which may be required to establish and/or document as-built locations, alignments, elevations, grades or quantities required by or provided for in the Contract Documents.
C. Contractor shall be required to prepare and submit to Owner, not less than five Business Days before the Preconstruction Meeting, a Construction Staking Outline consisting of completed draft Construction Survey Request forms detailing the scope, extent, and anticipated schedule of the construction staking proposed by Contractor for each phase of the work and separate Construction Survey Request to be submitted by Contractor during the course of the contract. Owner will review Contractor's Construction Staking Outline and notify Contractor of required changes, modifications, or deletions to the Construction Staking Outline prior to commencement of Work.
D. Construction staking will be provided in accordance with the approved Construction Staking Outline. Modifications and alterations to the Construction Staking Outline must be submitted and approved by Owner not less than five Business Days in advance of the requested date that construction survey activities are to begin (see Construction Survey Request: Requested Start Date). Owner reserves the right to reject, require modification and/or deletions to any such subsequent submittal prior to acceptance.
E. Contractor shall be responsible at its sole expense to ready the area required for construction survey activities prior to the arrival of Owner's survey crews on Site. For the purposes of construction surveying activities, readying includes clearing, grubbing and ensuring that the area required for construction surveys is clear of obstacles, debris, materials, equipment or hazards that would unreasonably interfere with or impede Owner's ability in Owner's reasonable judgment, to productively and effectively provide the construction survey requested, establish reliable, stable, survey points and stakes or markings on the ground. Owner reserves the right to delay, discontinue, or suspend construction surveys in areas and situations that in the sole judgment of Owner are not sufficiently readied for such surveys. Owner is not responsible for delays resulting from the areas required for construction survey activities not being sufficiently readied prior to survey crew's arrival on Site.
F. Contractor is responsible at its sole expense to provide traffic control for construction surveying activities, and shall coordinate with Owner to ensure sufficient traffic control and or safety measures are in place, prior to the arrival of the survey crew on Site. Owner reserves the right to delay, discontinue or suspend construction surveys in areas and situations that in the sole judgment of Owner lack sufficient traffic control and/or safety measures to safely, productively and efficiently accommodate construction survey activities. Owner is not responsible for delays resulting from the areas required for construction

survey activities lacking sufficient traffic control and/or safety measures in place prior to survey crew's arrival on Site.

G. Construction Survey Request(s) shall be submitted by Contractor not less than five Business Days prior to the date that the Site will be readied for construction surveying activities (hereafter referred to as the advanced notice period for Construction Survey Request(s)). Scheduling or time changes for a previously accepted Construction Survey Request shall be submitted to Owner not less than two Business Days in advance of the date that the Site will be readied. Requests submitted after 12:00 noon will be held over to the next Business Day for the purposes of beginning the advanced notice period for Construction Survey Requests.

H. Contractor is responsible to ensure that sufficient time is allowed to meet the advanced notice period for Construction Survey Request(s) requirements, to perform Site preparation requirements outlined above, to accommodate Owner's scheduling and resource availability, and for the Owner to complete construction survey activities. Contractor shall coordinate with Owner well in advance of the anticipated need, to ensure that sufficient resources are available to complete the construction surveys requested. No extension of time will be granted for delays resulting from construction survey activities.

I. Contractor shall not begin work on any element of construction until construction staking or related survey activity associated with a Construction Survey Request submitted by the Contractor has been completed. For the purposes of this section: Completion of construction staking or related survey activity shall be determined by Owner. Contractor will be notified by Owner's designated representative.

J. Contractor shall protect and preserve stakes set by Owner in accordance with the above. Contractor shall be responsible at its sole expense for re-staking or verification of survey stakes, cut/fills or markings that are damaged, destroyed or otherwise made un-useful/reliable by activities within its control in the reasonable judgment of Owner. Owner will provide replacement stakes or verification surveys requested by Contractor at Contractor's expense in accordance with normal staff rates and charges associated with personnel, equipment and materials required to perform such activities.

K. Whenever Contractor knows or reasonably should know that any Work or construction-related activity required under this Contract may, or is likely to damage, destroy or cause <u>any</u> property or right of way monument(s), survey control point(s), or Bench Marks to become unusable, Contractor shall notify Owner a minimum of five Business Days in advance of such work or activity. Owner will reference property or right of way monument(s) and survey control point(s) by survey, swing ties, or other appropriate means prior to their disturbance or destruction. Owner will replace or restore as appropriate property or right of way monuments and survey control point(s) disturbed, destroyed or otherwise made un-useful by Contractor's activities upon completion of the construction activities.

L. Contractor shall protect and preserve property or right of way monuments and survey control points, and shall be responsible at its sole expense for the cost replacing or restoring damaged or destroyed property or right of way monuments and survey control points, including the cost of preparing and filing a Corner Record or Record of Survey when required under Sec. 8771(b) of the Business and Professions Code of the State of California where sufficient notification to Owner was not provided in accordance with the above. Owner will perform such Surveying and Mapping activities required in Owner's sole judgment, to restore or replace property or right of way monuments and survey control point(s) disturbed, destroyed or otherwise made un-useful by Contractor's activities and required to comply Sec. 8771(b) of the Business and Professions Code of the State of

California, in accordance with staff rates and charges in effect for the associated personnel, equipment and materials required to perform such activities.

1.14 PROTECTION OF EXISTING STRUCTURES AND UNDERGROUND FACILITIES

A. The Drawings may indicate existing above- and below-grade structures, drainage lines, storm drains, sewers, water lines, gas lines, electrical lines, and other similar items and Underground Facilities that are known to Owner.
   1. At least 2 Business Days, or as otherwise noted, prior to commencement of excavation, notify the owners of the following Underground Facilities:
      a. Sewer lines: Agency, Service Center, Phone: (707) 521-1892

B. Where overhead service to a structure, known to receive service, does not exist, then underground service shall be assumed to exist.

C. In addition to reporting, if a utility is damaged, Contractor shall take appropriate action as provided in Document 00700 (General Conditions).

D. Additional compensation or extension of time on account of utilities not indicated or otherwise brought to Contractor's attention including reasonable action taken to protect or repair damage shall be determined as provided in Document 00700 (General Conditions).

1.15 PERMITS

A. Permits, agreements, or written authorizations that are known by Owner to apply to this Project are listed below:
   1. *US Department of the Army, Corps of Engineers nationwide permit*. The Corps' nationwide permit is available for review at Owner's Office.
   2. *State Water Resources Control Board (SWRCB), Order No. 2009-0009 – DWQ, National Pollutant Discharge Elimination System (NPDES), General Permit for Storm Water Discharges Associated with Construction and Land Disturbance Activities (Construction General Permit).* The permit is available at Owner's office or is available online at http://www.swrcb.ca.gov/water_issues/programs/stormwater/constpermits.shtml. Owner will file a Notice of Intent with SWRCB to obtain coverage under the General Permit. Contractor shall provide the Storm Water Pollution Prevention Plan, as described in Section 01500 (Temporary Facilities and Controls), in support of the Notice of Intent. Owner has determined that this Project has a combined risk level 2 as defined by SWRCB.

B. All other permits that may be required, including, but not limited to, electrical, mechanical, fire prevention, irrigation, grading, slope protection, tree cutting, dechlorinated water discharge, and flushing water discharge have not been applied for and shall be obtained by Contractor.

C. Applicable permit fees, if specifically listed in Document 00700 (General Conditions), will be reimbursed by Owner to the extent specified therein. All other permit fees shall be paid by Contractor.

D. Furnish copies of Contractor-obtained permits to Owner.

1.16 WORK ON WASTEWATER TREATMENT FACILITIES

A. The Project includes modifications of or additions to existing wastewater treatment facilities that serve the public. It is imperative that existing facilities continue to operate, in compliance with permit requirements, throughout the duration of the Work. Contractor shall carry out construction activities in a manner that does not disrupt facility operations.

B. Schedule all construction activities that affect the operation of the facilities with Owner. Provide all labor, equipment, and materials required to maintain the permitted operation on

a temporary basis whenever usual plant activities must be interrupted by construction activities. Any temporary operating arrangement shall comply with the facility's permit requirements. Any violation of these requirements may result in fines or other costs to Owner. Contractor shall be responsible for any and all costs, including attorneys' fees, incurred as a result of any violation or threatened violation of permit requirements where the violation or threatened violation arises out of or in connection with Contractor's construction activities. This remedy is in addition to any other remedy existing under this Contract.

1.17 RIGHTS-OF-WAY

A. Owner owns the property as indicated.

1.18 DOCUMENT TRACKING

A. Owner will maintain a computerized document control system to monitor the generation, status, and filing of documents. Documents such as, but not limited to, Contracts, Cost Proposals, Change Orders (proposed and approved), Meeting Minutes, Schedules and Reports, Payment Applications, certificates of insurance, Safety Reports, Requests for Information, Requests for Substitutions, correspondence, communications, notices, Submittals, transmittals, and logs shall be submitted electronically for Owner to control the documents using the computerized system. Owner will use the computerized system to track and manage all documents on the Project, after Notice to Proceed, to the greatest extent possible.
B. Provide all Project documents to Owner in searchable electronic format with a minimum of one hard copy, unless otherwise required by the Contract Documents. If file size prohibits electronic transmittal, submit to Owner on compact disk (CD).
C. Provide electronic format documents in searchable portable document format (PDF), unless otherwise required by the Contract Documents or directed in writing by Owner.

PART 2 PRODUCTS

2.1 PRODUCTS ORDERED IN ADVANCE

A. As provided in Section 01200 (Price and Payment Procedures), paragraph 1.5E, and subject to all other provisions of the Contract Documents, Owner will pay for the following materials and equipment prior to incorporation into the Work:
   1. Materials:
      a. None
   2. Equipment:
      a. None

2.2 OWNER-FURNISHED PRODUCTS

A. Owner-Furnished Products:
   1. None.
B. Owner's Responsibilities:
   1. Arrange for and deliver Owner-reviewed Shop Drawings, Product Data, and Samples, to Contractor.
   2. Arrange and pay for delivery to Site.
   3. On delivery, inspect products jointly with Contractor.

4. Submit claims for transportation damage and replace damaged, Defective, or deficient items.
5. Arrange for manufacturers' warranties, inspections, and service.

C. Contractor's Responsibilities:
1. Review Owner-reviewed Shop Drawings, Product Data, and Samples.
2. Receive and unload products at Site; inspect for completeness or damage jointly with Owner.
3. Handle, store, install, and finish products.
4. Repair or replace items damaged after receipt.
5. Install into Project per Contract Documents.

PART 3 EXECUTION – NOT USED

END OF SECTION

SECTION 01200

PRICE AND PAYMENT PROCEDURES

PART 1 GENERAL

1.1 SUMMARY

A. Section includes:
   1. Description of requirements and procedures for determining amount of Work performed and for obtaining payment for Work performed.

1.2 REFERENCES

A. California Public Contract Code
B. Code of Civil Procedure

1.3 SCOPE OF WORK

Work under Contract Documents, or under any Bid item, allowance, or Alternate, shall include all labor, materials, taxes, transport, handling, storage, supervision, administration, and all other items necessary for the satisfactory completion of Work, whether or not expressly specified or indicated.

1.4 DETERMINATION OF QUANTITIES

Quantity of Work to be paid for under any item for which a unit price is fixed in Contract Documents shall be number, as determined by Owner, of units of Work satisfactorily completed in accordance with Contract Documents or as directed by Owner. Unless otherwise provided, determination of number of units of Work so completed will be based, so far as practicable, on actual measurement or count within prescribed or ordered limits, and no payment will be made for Work done outside of limits. Measurements and computations will be made by methods set forth in Contract Documents, including without limitation this Section 01200. If methods are not so set forth, measurements shall be made in any manner which Owner considers appropriate for class of Work measured (e.g., pre-assigned values, percentage completion, units completed or incremental Milestones). Contractor must immediately inform Owner of any disputes regarding quantity measurements and shall immediately supply Owner with any documentation supporting the disputed measurements.

1.5 SCOPE OF PAYMENT

A. Except as otherwise expressly stated in Section 01100 (Summary), payment to Contractor at the unit price or other price fixed in Contract Documents for performing Work required under any item, or (if the Contract is on a single lump sum price basis) at the lump sum price fixed in the Contract Documents for performing all Work required under Contract Documents, and as either may be adjusted pursuant to any approved Change Order or Construction Change Directive, shall be full compensation for completing, in accordance with Contract Documents, all Work required under the item or under Contract Documents, and for all expense incurred by Contractor for any purpose in connection with the performance and completion of said Work, including all incidental Work necessary for completion of the Work.
B. The Contract Sum, whether lump sum, unit price or otherwise, shall be deemed to include all costs necessary to complete required Work, all costs (if any) for loss or damage arising from nature of Work or prosecution of the Work, and from action of elements. Unless

Contract Documents expressly provide otherwise, the Contract Sum shall be deemed to include:

1. Any and all costs arising from any unforeseen difficulties which may be encountered during, and all risks of any description connected with, prosecution of Work or prosecution of Bid item (whether lump sum or unit price) until acceptance by Owner;
2. All expenses incurred due to suspension, or discontinuance of Work or discontinuance of Bid item (whether lump sum or unit price) as provided in Contract Documents;
3. Escalation to allow for cost increases between time of Contract Award and completion of Work or completion of Bid item (whether lump sum or unit price).

C. Whenever it is specified herein that Contractor is to do Work or furnish materials of any class for which no price is fixed in Contract Documents, it shall be understood that Contractor is to do such Work or furnish such materials without extra charge or allowance or direct payment of any sort, and that cost of doing Work or furnishing materials is to be included in price Bid, unless it is expressly specified herein, in particular cases, that Work or material is to be paid for as extra Work.

D. Unit Prices shall apply to Work covered by unit prices so long as actual quantities performed on the Project are not less than 75 percent or greater than 125 percent of the estimated quantities contained in Document 00400 (Bid Form) or otherwise referenced in Section 01100 (Summary). If actual quantities exceed these parameters, then the unit price shall be adjusted by an amount to reflect the Contractor's incremental cost differential resulting from increased or decreased economies of scale.

E. No payment shall be made for materials or equipment not yet incorporated into the Work, except as specified in Section 01100 (Summary).

F. For any materials and equipment referenced in Section 01100 (Summary) as subject to payment prior to incorporation into the Work, where Contractor requests payment on the basis of such materials and equipment not incorporated in the Work, Contractor must satisfy the following conditions:

1. The materials and/or equipment shall be delivered and suitably stored at the Site or at another local location agreed to in writing, for example, a mutually acceptable warehouse;
2. Full title to the materials and/or equipment shall vest in Owner at the time of delivery to the Site, warehouse or other storage location;
3. Obtain a negotiable warehouse receipt, endorsed over to Owner for materials and/or equipment stored in an Off Site warehouse. No payment will be made until such endorsed receipts are delivered to Owner;
4. Stockpiled materials and/or equipment shall be available for Owner inspection, but Owner shall have no obligation to inspect them and its inspection or failure to inspect shall not relieve Contractor of any obligations under the Contract Documents. Materials and/or equipment shall be segregated and labeled or tagged to identify these specific Contract Documents;
5. After delivery of materials and/or equipment, if any inherent or acquired defects are discovered, Defective materials and/or equipment shall be removed and replaced with suitable materials and/or equipment at Contractor's expense;
6. At Contractor's expense, insure the materials and/or equipment against theft, fire, flood, vandalism, and malicious mischief, as well as any other coverages required under the Contract Documents;
7. Contractor's Application for Payment shall be accompanied by a bill of sale, invoice or other documentation warranting that Owner has received the materials and equipment

free and clear of all liens and evidence that the materials and equipment are covered by appropriate property insurance and other arrangements to protect Owner's interest therein, all of which must be satisfactory to Owner. This documentation shall include, but not be limited to, conditional releases of mechanics' liens and stop notices from all those providing materials and equipment as to which the Application for Payment relates, as well as unconditional releases of the same from the same as to the previous Application for Payment for which they have not already been provided.

G. Amounts previously paid for materials and equipment prior to incorporation into the Work shall be deducted from amounts otherwise due Contractor as they are incorporated.

1.6 BASIS OF PAYMENT

A. Unit Price Quantities: When estimated quantity for specific portions of Work is listed in Document 00400 (Bid Form), quantity of Work to be paid for shall be actual number of units satisfactorily completed, as determined by Owner and certified by Contractor, in accordance with Contract Documents.

B. Lump Sum: When estimated quantity for specific portion of Work is not indicated and unit is designated as lump sum, payment will be on a lump sum basis for Work satisfactorily completed in accordance with Contract Documents.

C. Allowances: Allowance items (if any) will be paid for as provided in Section 01100 (Summary). Funds authorized for Allowance Work will not be released for Contract payments unless Owner has authorized Allowance Work in writing.

D. Owner does not expressly, or by implication, agree, warrant, or represent in any manner, that actual amount of Work will correspond with amount shown or estimated and reserves right to increase or decrease amount of any class or portion of Work, to leave out entire Bid item or items, or to add work not originally included in Bid or Contract Documents, when in its judgment such change is in best interest of Owner. No change in Work shall be considered a waiver of any other condition of Contract Documents. No claim shall be made for anticipated profit, for loss of profit, for damages, or for extra payment whatever, except as otherwise expressly provided for in Contract Documents, because of any differences between amount of Work actually done and estimated amount as set forth herein, or for elimination of Bid items.

1.7 PROGRESS PAYMENTS

A. Owner's General Manager is authorized to approve progress payments in conformance with Contract Documents and the Auditor/Controller of the County of Sonoma is authorized to process such payments upon their submission by the General Manager.

B. If requested by Contractor, progress payments will be made monthly.

C. Schedule of Values:

1. Within the time set forth in Document 00700 (General Conditions), submit a detailed breakdown of Contractor's Bid by scheduled Work items and/or activities, including coordination responsibilities and Project Record Documents responsibilities. Where more than one Subcontractor comprises the work of a Work item or activity, the Schedule of Values shall show a separate line item for each subcontract. Furnish such breakdown of the total Contract Sum by assigning dollar values (cost estimates) to each applicable Progress Schedule network activity, which cumulative sum equals the total Contract Sum. The format and detail of the breakdown shall be as directed by Owner to facilitate and clarify future progress payments to Contractor for direct Work under Contract Documents. This breakdown shall be referred to as the Schedule of Values.

2. Contractor's overhead, profit, insurance, cost of bonds (except to the extent expressly identified in a Bid item) and/or other financing, as well as "general conditions costs," (e.g., Site cleanup and maintenance, temporary roads and access, off-Site access roads, temporary power and lighting, security, and the like), shall be prorated through all activities so that the sum of all the Schedule of Values line items equals Contractor's total Contract Sum, less any allowances designated by Owner. Scheduling, record documents and quality assurance control shall be separate line items.
3. Owner will review the breakdown in conjunction with the Progress Schedule to ensure that the dollar amounts of this Schedule of Values are, in fact, fair market cost allocations for the Work items listed. Upon favorable review by Owner, Owner will accept this Schedule of Values for use. Owner shall be the sole judge of fair market cost allocations.
4. Owner will reject any attempt to increase the cost of early activities, i.e., "front loading," resulting in a complete reallocation of moneys until such "front loading" is corrected. Repeated attempts at "front loading" may result in suspension or termination of the Work for default, or refusal to process progress payments until such time as the Schedule of Values is acceptable to Owner.

D. Monthly Report Sheets and Applications for Payment: Contractor shall establish and maintain records of cost of the Work in accordance with generally accepted accounting practices; reconcile the amount of Work completed monthly with Owner, and sign Owner's monthly report sheet certifying to the Work done. Monthly report sheets shall be considered the true record of the Cost of the Work and Contractor shall submit in a form acceptable to Owner an itemized cost breakdown of Contractor's record of Cost of the Work together with supporting data and any certification required by Owner. In addition:

1. On or before the sooner of (a) the 20th Day of each month and (b) receipt of Owner's approval of the updated Schedule as required by Section 01320 (Progress Schedules and Reports), Owner and Contractor will reconcile any differences in the field, based on the reconciled monthly report sheets, and Contractor shall submit to Owner an Application for Payment for the cost of the Work put in place during the period from the 15th Day of the previous month to the 15th Day of the current month, along with the Owner-approved updated Schedule. Such Applications for Payment shall be for the total value of activities completed or partially completed, including approved activity costs, based upon Schedule of Values prices (or Bid item prices if unit price) of all labor and materials incorporated in the Work up until midnight of the last Day of that one month period, less the aggregate of previous payments. Accumulated retainage shall be shown as separate item in payment summary. If Contractor is late submitting its Application for Payment, that Application may be processed at any time during the succeeding one-month period, resulting in processing of Contractor's Application for Payment being delayed for more than a Day for Day basis.
2. Applications for Payment may include, but are not necessarily limited to the following:
   a. Material, equipment, and labor incorporated into the Work, less any previous payments for the same.
   b. Up to 75 percent of the cost of equipment identified in paragraph 1.5F of this Section 01200 (if any), if purchased and delivered to the Site or stored off Site, as may be approved by Owner.
   c. Up to 50 percent of the cost of materials identified in paragraph 1.5F of this Section 01200 (if any), specifically fabricated for the Project that are not yet incorporated into the Work.

3. At the time any Application for Payment is submitted, certify in writing the accuracy of the Application and that Contractor has fulfilled all scheduling requirements of Document 00700 (General Conditions) and Section 01320 (Progress Schedules and Reports), including updates and revisions. A responsible officer of Contractor shall execute the certification.
4. No progress payment will be processed prior to Owner receiving all requested, acceptable schedule update information. Failure to submit a schedule update complying with Section 01320 justifies denying the entire Application for Payment, or in Owner's discretion withholding amounts as described in paragraph 1.7E.10 of this Section 01200.
5. Each Application for Payment shall list each Change Order and Construction Change Directive ("CCD") executed prior to date of submission, including the Change Order/CCD Number, and a description of the Work activities, consistent with the descriptions of original Work activities. Submit a monthly Change Order/CCD status log to Owner.
6. If Owner requires substantiating data, submit information requested by Owner, with cover letter identifying Project, Application for Payment number and date, and detailed list of enclosures.
7. If Contractor fails or refuses to participate in monthly Work reconciliations or other construction progress evaluation with Owner, Contractor shall not receive current payment until Contractor has participated fully in providing construction progress information and schedule update information to Owner.

E. Progress Payments
1. Owner will review Contractor's Application for Payment following receipt. If adjustments need to be made to percent of completion of each activity, Owner will make appropriate notations and return to Contractor. Contractor shall revise and resubmit. All parties shall update percentage of completion values in the same manner, i.e., express value of an accumulated percentage of completion to date.
2. Each Application for Payment may be reviewed by Owner and/or inspectors to determine whether the Application for Payment is proper, and shall be rejected, revised, or approved by Owner pursuant to the Schedule of Values prepared in accordance with paragraph 1.7C of this Section 01200.
3. If it is determined that the Application for Payment is not proper and suitable for payment, Owner will return it to the Contractor as soon as practicable, but no later than seven Days after receipt, together with a document setting forth in writing the reasons why the Application for Payment is not proper. If Owner determines that portions of the Application for Payment are not proper or not due under the Contract Documents, then Owner may approve the other portions of the Application for Payment, and in the case of disputed items or Defective Work not remedied, may withhold up to 150 percent of the disputed amount from the progress payment.
4. Pursuant to California Public Contract Code Section 20104.50, if Owner fails to make any progress payment within 30 Days after receipt of an undisputed and properly submitted Application for Payment from Contractor, Owner shall pay interest to the Contractor equivalent to the legal rates set forth in subdivision (a) of Section 685.010 of the Code of Civil Procedure. The 30-Day period shall be reduced by the number of Days by which Owner exceeds the seven-Day return requirement set forth herein.
5. As soon as practicable after approval of each Application for Payment for progress payments, Owner will pay to Contractor in manner provided by law, an amount equal

to 90 percent of the amounts otherwise due as provided in the Contract Documents, or a lesser amount if so provided in Contract Documents, provided that payments may at any time be withheld if, in judgment of Owner, Work is not proceeding in accordance with Contract, or Contractor is not complying with requirements of Contract, or to comply with stop notices or to offset liquidated damages accruing or expected.

6. Before any progress payment or final payment is due or made, Contractor shall submit satisfactory evidence that Contractor is not delinquent in payments to employees, Subcontractors, suppliers, or creditors for labor and materials incorporated into Work. This specifically includes, without limitation, conditional lien release forms for the current progress payment and unconditional release forms for past progress payments.
7. Owner reserves and shall have the right to withhold payment for any equipment and/or specifically fabricated materials that, in the sole judgment of Owner, are not adequately and properly protected against weather and/or damage prior to or following incorporation into the Work.
8. Granting of progress payment or payments by Owner, or receipt thereof by Contractor, shall not be understood as constituting in any sense acceptance of Work or of any portion thereof, and shall in no way lessen liability of Contractor to replace unsatisfactory Work or material, though unsatisfactory character of Work or material may have been apparent or detected at time payment was made.
9. When Owner shall charge sum of money against Contractor under any provision of Contract Documents, amount of charge shall be deducted and retained by Owner from amount of next succeeding progress payment or from any other moneys due or that may become due Contractor under Contract. If, on completion or termination of Contract, such moneys due Contractor are found insufficient to cover Owner's charges against it, Owner shall have right to recover balance from Contractor or Sureties.
10. If Contractor fails to submit an acceptable Progress Schedule update, or fails to bring an acceptable Project Record Drawings update to Progress Payment Meeting, Owner will retain 5% of each Progress Payment amount thereafter (in addition to any other retention) until Owner's acceptance of a Progress Schedule update. This retention shall apply cumulatively.

1.8 FINAL PAYMENT

A. As soon as practicable after all required Work is completed in accordance with Contract Documents, including punchlist, testing, record documents and Contractor maintenance after Final Acceptance, Owner will pay to Contractor, in manner provided by law, unpaid balance of Contract Sum of Work (including without limitation retentions), or whole Contract Sum of Work if no progress payment has been made, determined in accordance with terms of Contract Documents, less sums as may be lawfully retained under any provisions of Contract Documents or by law.

B. Prior progress payments shall be subject to correction in the final payment. Owner's determination of amount due as final payment shall be final and conclusive evidence of amount of Work performed by Contractor under Contract Documents and shall be full measure of compensation to be received by Contractor.

C. Contractor and each assignee under an assignment in effect at time of final payment shall execute and deliver at time of final payment, and as a condition precedent to final payment, Document 00650 (Agreement and Release of Any and All Claims).

1.9 EFFECT OF PAYMENT

A. Payment will be made by Owner, based on Owner's observations at the Site and the data comprising the Application for Payment. Payment will not be a representation that Owner has:
   1. Made exhaustive or continuous on-Site inspections to check the quality or quantity of Work;
   2. Reviewed construction means, methods, techniques, sequences, or procedures;
   3. Reviewed copies of requisitions received from Subcontractors and material suppliers and other data requested by Owner to substantiate Contractor's right to payment; or
   4. Made examination to ascertain how or for what purpose Contractor has used money previously paid on account of the Contract Sum.

PART 2 PRODUCTS – NOT USED

PART 3 EXECUTION – NOT USED

END OF SECTION

SECTION 01250

MODIFICATION PROCEDURES

PART 1 GENERAL

1.1 SUMMARY

A. Section includes:
   1. Description of general procedural requirements for alterations, Modifications, and extras.

1.2 GENERAL

A. Any change in scope of Work or deviation from Contract Documents including, without limitation, extra Work, or alterations or additions to or deductions from the original Work, shall not invalidate the original Contract, and shall be performed under the terms of the Contract Documents.
B. Only Contractor or Owner may initiate changes in scope of Work or deviation from Contract Documents.
   1. Contractor may initiate changes by submitting RFIs, Notice of Differing Site Conditions, or Notice of Hazardous Waste or Materials Conditions.
      a. RFIs shall be submitted to seek clarification of or request changes in the Contract Documents.
      b. Notices of Differing Site Conditions shall be submitted in accordance with Document 00700 (General Conditions).
      c. Notices of Hazardous Waste or Materials Conditions shall be submitted in accordance with Document 00700 (General Conditions).
   2. Contractor shall be responsible for its costs to implement and administer RFIs throughout the Contract duration. Regardless of the number of RFIs submitted, Contractor shall not be entitled to additional compensation for administrative costs. Contractor shall be responsible for both Owner and its Engineer's administrative costs for answering RFIs where the answer could reasonably be found by reviewing the Contract Documents, as determined by Owner; at Owner's discretion, such costs may be deducted from progress payments or final payment.
   3. Owner may initiate changes by issuing a Supplemental Instruction, which may revise, add to or subtract from the Work.
   4. Owner may initiate changes in the Work or Contract Time by issuing RFPs to Contractor. Such RFPs will detail all proposed changes in the Work and request a quotation of changes in Contract Sum and Contract Time from Contractor.
   5. Owner may also, by Construction Change Directive ("CCD"), order changes in the Work within the general scope of the Contract consisting of additions, deletions, or other revisions, the Contract Sum and Contract Time being adjusted accordingly. A CCD shall be used in the absence of total agreement on the terms of a Change Order and may, upon notice, consist of a Change Order executed by Owner only.

1.3 PROCEDURES

A. Cost Proposal and Procedures: Whenever Contractor is required in this Section 01250 to prepare a Cost Proposal, and whenever Contractor is entitled to submit a Cost Proposal and elects to do so, Contractor shall prepare and submit to Owner for consideration a Cost Proposal using the form attached to this Section 01250. All Cost Proposals must contain a

complete breakdown of costs of credits, deducts, and extras; and itemizing materials, labor, taxes, overhead and profit. All Subcontractor Work shall be so indicated. Individual entries on the Cost Proposal form shall be determined as provided in paragraphs 1.4 and 1.5 of this Section 01250. After receipt of a Cost Proposal with a detailed breakdown, Owner will act promptly thereon.

1. If Owner accepts a Cost Proposal, Owner will prepare Change Order for Owner and Contractor signatures.
2. If Cost Proposal is not acceptable to Owner because it does not agree with cost and/or time included in Cost Proposal, Owner will submit in a response what it believes to be a reasonable cost and/or adjustment, if any. Except as otherwise provided in this Section 01250, Contractor shall have seven Days in which to respond to Owner with a revised Cost Proposal.
3. When necessity to proceed with a change does not allow the Owner sufficient time to conduct a proper check of a Cost Proposal (or revised Cost Proposal), Owner may order Contractor to proceed on basis to be determined at earliest practical date. In this event, value of change, with corresponding equitable adjustment to Contract, shall not be more than increase or less than decrease proposed.

B. Request for Information (RFI): Whenever Contractor requires information regarding the Project or Contract Documents, or receives a request for information from a Subcontractor, Contractor may prepare and deliver an RFI to Owner, using the form attached to this Section 01250 or using the Contractor interface for Owner's project management software. Contractor must submit time critical RFIs at least 30 Days before scheduled start date of the affected Work activity. Contractor shall reference each RFI to an activity of Progress Schedule and shall note time criticality of the RFI, indicating time within which a response is required. Contractor's failure to reference RFI to an activity on the Progress Schedule and note time criticality on the RFI shall constitute Contractor's waiver of any claim for time delay or interruption to the Work resulting from any delay in responding to the RFI.

1. Owner will respond within 15 Days from receipt of RFI with a written response to Contractor. Contractor shall distribute response to all appropriate Subcontractors.
2. If Contractor is satisfied with the response and does not request change in Contract Sum or Contract Time, then the response shall be executed without a change.
3. If Contractor believes the response is incomplete, Contractor shall issue another RFI to Owner clarifying original RFI. Additionally, Owner may return RFI requesting additional information should original RFI be inadequate in describing condition.
4. If Contractor believes that the response results in change in Contract Sum or Contract Time, Contractor shall notify Owner in writing within 15 Days after receiving the response. If Owner disagrees with Contractor, then Contractor may give notice of intent to submit a Claim as described in Article 12 of Document 00700 (General Conditions), and submit its Claim within 30 Days. If Owner agrees with Contractor, then Contractor must submit a Cost Proposal within 21 Days of receiving the response to the RFI. Contractor's failure to deliver either the foregoing notice and Claim or Cost Proposal by the respective deadlines stated in the foregoing sentences shall result in waiver of the right to file a Cost Proposal or Claim.

C. Supplemental Instruction: Owner may issue Supplemental Instruction to Contractor.

1. If Contractor is satisfied with Supplemental Instruction and does not request change in Contract Sum or Contract Time, then Supplemental Instruction shall be executed without a Change Order.

2. If Contractor believes that Supplemental Instruction results in change in Contract Sum or Contract Time, then Contractor must submit a Cost Proposal to Owner within 21 Days of receiving the Supplemental Instruction.

D. Construction Change Directives: If at any time Owner believes in good faith that a timely Change Order will not be agreed upon using the foregoing procedures, Owner may issue a CCD with its estimated cost and/or time adjustment. Upon receipt of CCD, Contractor shall promptly proceed with the change of Work involved and concurrently respond to Owner's CCD within 10 Days.
   1. Contractor's response must be any one of following:
      a. Return CCD signed, thereby accepting Owner's response, time, and cost.
      b. Submit a (revised if applicable) Cost Proposal with supporting documentation (if applicable, reference original Cost Proposal number followed by letter A, B, etc. for each revision), if Owner so requests.
      c. Give notice of intent to submit a Claim as described in Article 12 of Document 00700 (General Conditions), and submit its Claim within 30 Days.
   2. If the CCD provides for an adjustment to the Contract Sum, the adjustment shall be based on one of the following methods:
      a. Mutual acceptance of a lump sum properly itemized and supported by sufficient substantiating data to permit evaluation.
      b. Unit prices stated in the Contract Documents or subsequently agreed upon.
      c. Cost to be determined in a manner agreed.
   3. CCD signed by Contractor indicates the agreement of Contractor therewith, including adjustment in Contract Sum and Contract Time or the method for determining them. Such agreement shall be effective immediately and shall be recorded as a Change Order.
   4. If Contractor does not respond promptly or disagrees with the method for adjustment in the Contract Sum, the method and the adjustment shall be determined by Owner on the basis of reasonable expenditures and savings of those performing the Work attributable to the change including, in case of an increase in the Contract Sum, a reasonable allowance for overhead and profit. If the parties still do not agree on the price for a CCD, Contractor may file a Claim per Article 12 of Document 00700 (General Conditions). Contractor shall keep and present, in such form as Owner may prescribe, an itemized accounting together with appropriate supporting data. Unless otherwise provided in the Contract Documents, costs for the purposes of this paragraph shall be limited to those provided in paragraphs 1.4 and 1.5 of this Section 01250.
   5. Pending final determination of cost to Owner, amounts not in dispute may be included in Applications for Payment. The amount of credit to be allowed by Contractor to Owner for a deletion or change that results in a net decrease in the Contract Sum shall be actual net cost as confirmed by Owner. When both additions and credits covering related Work or substitutions are involved in a change, the allowance for overhead and profit shall be figured on the basis of net increase, if any, with respect to that change.

E. Owner Requested RFP: Contractor shall furnish a Cost Proposal within 21 Business Days of Owner's RFP. Upon approval of Cost Proposal, Owner will issue a Change Order directing Contractor to proceed with extra Work. If the parties do not agree on the price, Owner may either issue a CCD or decide the issue per Article 12 of Document 00700 (General Conditions). Contractor shall perform the changed Work notwithstanding any claims or disagreements of any nature.

F. Differing Site Conditions: Contractor shall submit Notices of Differing Site Conditions to resolve problems regarding differing underground Site conditions encountered in the

execution of the Work pursuant to paragraph 13.4 of Document 00700 (General Conditions), which shall govern. If Owner determines that a change in Contract Sum or Contract Time is justified, Owner will issue RFP or CCD.

G. Hazardous Waste Conditions: Contractor shall submit Notices of Hazardous Waste or Materials Conditions to resolve problems regarding hazardous materials encountered in the execution of the Work pursuant to paragraph 13.5 of Document 00700 (General Conditions), which shall govern. If Owner determines that a change in Contract Sum or Contract Time is justified, Owner will issue RFP or CCD.

H. All Changes:
   1. Documentation of Change in Contract Sum and Contract Time:
      a. Contractor shall maintain detailed records of Work performed on a time-and-material basis.
      b. Contractor shall document each proposal for a change in cost or time with sufficient data to allow evaluation of the proposal.
      c. Contractor shall, on request, provide additional data to support computations for:
         1) Quantities of products, materials, labor, and equipment.
         2) Taxes.
         3) Justification for any change in Contract Time and new Progress Schedule showing revision due, if any.
         4) Credit for deletions from Contract, similarly documented.
      d. Contractor shall support each claim for additional costs, and for Work performed on a cost-and-percentage basis, with additional information including:
         1) Credit for deletions from Contract, similarly documented.
         2) Origin and date of claim.
         3) Dates and times Work was performed and by whom.
         4) Time records and wage rates paid.
         5) Invoices and receipts for products, materials, equipment, and subcontracts, similarly documented.

I. Correlation of Other Items:
   1. Contractor shall revise Schedule of Values and Application for Payment forms to record each authorized Change Order or CCD as a separate line item and adjust the Contract Sum as shown thereon prior to the next monthly pay period.
   2. Contractor shall revise the Progress Schedules prior to the next monthly pay period.
   3. Contractor shall enter changes in Project Record Documents prior to the next monthly pay period.

J. Responses: For all responses for which the Contract Documents, including without limitation this Section 01250, do not provide a specific time period, recipients shall respond within a reasonable time.

1.4 COST DETERMINATION

A. Total cost of extra Work or of Work omitted shall be the sum of labor costs, material costs, equipment rental costs, and specialist costs as defined herein plus overhead and profit as allowed herein. This limit applies in all cases of claims for extra Work, whether calculating Cost Proposals, Change Orders or CCDs, or calculating claims of all types, and applies even in the event of fault, negligence, strict liability, or tort claims of all kinds, including strict liability or negligence. Contractor may recover no other costs arising out of or connected with the performance of extra Work, of any nature. No special, incidental or consequential damages may be claimed or recovered against Owner, its representatives or agents, whether

arising from breach of Contract, negligence, or strict liability, unless specifically authorized in the Contract Documents.

B. Markup for Overhead and Profit: (Overhead shall be as defined in paragraph 1.8 of this Section 01250)
   1. Markup for overhead and profit on labor for extra Work shall not exceed 15 percent.
   2. Markup for overhead and profit on materials for extra Work shall not exceed 15 percent.
   3. Markup for overhead and profit on owner-operated equipment for extra Work shall not exceed 15 percent.
   4. Markup for overhead and profit on equipment for extra Work shall not exceed 10 percent.
   5. When extra Work is performed by a first tier Subcontractor, Contractor shall receive a 5 percent markup on Subcontractors' total costs of extra Work. First tier Subcontractor's markup on its Work shall not exceed percentages listed in paragraphs 1.4B.1, 1.4B.2, 1.4B.3, and 1.4B.4 immediately above.
   6. When extra Work is performed by a lower tier Subcontractor, Contractor, first tier Subcontractors, and lower tier Subcontractors shall divide (as mutually agreed) a total of 5 percent markup on the lower tier Subcontractors' total costs of extra Work.
   7. Notwithstanding the foregoing, in no case shall the total markup on any extra Work exceed 20 percent of the direct cost, notwithstanding the actual number of Contract tiers.
   8. On proposals covering both increases and decreases in Contract Sum, overhead, profit, and commission shall be allowed on the net increase only as determined in this paragraph 1.4. When the net difference is a deletion, no percentage for overhead profit and commission shall be allowed, but rather a deduction shall apply.
   9. The markup shall include profit, small tools, cleanup, engineering, supervision, warranties, cost of preparing the cost proposal, jobsite overhead, and home office overhead. No markup will be allowed on taxes, insurance, and bonds.

C. Taxes:
   1. All State sales tax, use tax, and Sonoma County and applicable City sales taxes shall be included.
   2. Federal and Excise tax shall not be included.

D. Owner-Operated Equipment: When owner-operated equipment is used to perform extra Work, Contractor will be paid as follows:
   1. Payment for cost of equipment will be made at no more than rates of such equipment established in paragraph 1.5C of this Section 01250.
   2. Payment for cost of labor will be made at no more than rates of such labor established by collective bargaining agreements for type of worker and location of Work, whether or not owner-operator is actually covered by such an agreement.
   3. Invoices for owner-operated equipment need not itemize labor and equipment costs, unless specifically requested by Owner. In any event, the total rate for owner-operated equipment shall not exceed the combined rates for labor and equipment listed in paragraphs 1.4D.1 and 1.4D.2 above.

E. Accord and Satisfaction: Every Change Order and accepted CCD shall constitute a full accord and satisfaction, and release, of all Contractor (and if applicable, Subcontractor) claims for additional time, money or other relief arising from or relating to the subject matter of the change including, without limitation, impacts of all types, cumulative impacts, inefficiency, overtime, delay, and any other type of claim. Contractor may elect to reserve its rights to disputed claims arising from or relating to the changed Work at the time it signs a Change Order or accepts a CCD, but must do so expressly in a writing delivered

concurrently with the executed Change Order or approved CCD, and must also submit a Claim for the reserved disputed items pursuant to Article 12 of Document 00700 (General Conditions) no later than 30 Days of Contractor's first written notice of its intent to reserve rights.

1.5 COST BREAKDOWN

A. Labor: Contractor will be paid cost of labor for workers (including forepersons when authorized by Owner) used in actual and direct performance of extra Work. Labor rate, whether employer is Contractor, Subcontractor or other forces, will be sum of following:
   1. Actual Wages: Actual wages paid shall include any employer payments to or on behalf of workers for health and welfare, pension, vacation, and similar purposes.
   2. Labor surcharge: Payments imposed by local, county, state, and federal laws and ordinances, and other payments made to, or on behalf of, workers, other than actual wages as defined in paragraph 1.5A.1 of this Section 01250, such as taxes and insurance. Labor surcharge shall be and shall not exceed that set forth in Caltrans official labor surcharges schedule which is in effect on date upon which extra Work is accomplished and which schedule is incorporated herein by reference as though fully set forth herein.

B. Material: Only materials furnished by Contractor and necessarily used in performance of extra Work will be paid for. Cost of such materials will be cost, including sales tax, to purchaser (Contractor, Subcontractor or other forces) from supplier thereof, except as the following are applicable:
   1. If cash or trade discount by actual supplier is offered or available to purchaser, it shall be credited to Owner notwithstanding fact that such discount may not have been taken.
   2. For materials salvaged upon completion of extra Work, salvage value of materials shall be deducted from cost, less discounts, of materials.
   3. If cost of a material is, in opinion of Owner, excessive, then cost of material shall be deemed to be lowest current wholesale price at which material is available in quantities concerned delivered to Site, less any discounts as provided in paragraph 1.5B.1 of this Section 01250.

C. Equipment: For Contractor- or Subcontractor-owned equipment, payment will be made at rental rates listed for equipment in Caltrans official equipment rental rate schedule which is in effect on date upon which extra Work is accomplished and which schedule is incorporated herein by reference as though fully set forth herein. If there is no applicable rate for an item of equipment, then payment shall be made for Contractor- or Subcontractor-owned equipment at rental rate listed in the most recent edition of the Association of Equipment Distributors (AED) book. For rented equipment, payment will be made based on actual rental invoices. Equipment used on extra Work shall be of proper size and type. If, however, equipment of unwarranted size or type and cost is used, cost of use of equipment shall be calculated at rental rate for equipment of proper size and type, as determined by Owner. Rates paid shall be deemed to cover cost of fuel, oil, lubrication, supplies, small tools, necessary attachments, repairs and maintenance of any kind, depreciation, storage, insurance, and all incidentals. Unless otherwise specified, manufacturer's ratings, and manufacturer-approved modifications, shall be used to classify equipment for determination of applicable rates. Individual pieces of equipment or tools not listed in said publication and having a replacement value of $100 or less, whether or not consumed by use, shall be considered to be small tools and no payment will be made therefor as payment is included in payment for labor. Payment will not be made for time in which equipment is inoperative due to breakdowns.

1. For Contractor or Subcontractor–owned equipment on Site, payment for equipment use will be for time equipment is in operation on extra Work being performed or on standby as approved by Owner.
2. For rented equipment on Site, the following shall be used in computing rental time of equipment:
   a. When hourly rates are listed, less than 30 minutes of operation shall be considered to be ½ hour of operation.
   b. When daily rates are listed, less than four hours of operation shall be considered to be ½ Day of operation.
3. For equipment that must be brought to Site to be used exclusively on extra Work, cost of transporting equipment to Site and its return to its original location shall be determined as follows:
   a. Owner will pay for costs of loading and unloading equipment.
   b. Cost of transporting equipment in low bed trailers shall not exceed hourly rates charged by established haulers.
   c. Cost of transporting equipment shall not exceed applicable minimum established rates of California Public Utilities Commission.
   d. Owner will not make any payment for transporting and loading and unloading equipment if equipment is used on Work in any other way than upon extra Work.
4. For rented equipment, rental period may begin at time equipment is unloaded at Site of extra Work and terminate at end of the performance of the extra Work or Day on which Owner directs Contractor to discontinue use of equipment, whichever first occurs. Excluding Saturdays, Sundays, and Owner's legal holidays, unless equipment is used to perform extra Work on such Days, rental time to be paid per Day shall be four hours for zero hours of operation, six hours for four hours of operation and eight hours for eight hours of operation, time being prorated between these parameters. Hours to be paid for equipment that is operated less than eight hours due to breakdowns, shall not exceed eight less number of hours equipment is inoperative due to breakdowns.

D. Work Performed by Special Forces or Other Special Services: When Owner and Contractor, by agreement, determine that special service or item of extra Work cannot be performed by forces of Contractor or those of any Subcontractors, service or extra Work item may be performed by specialist. Invoices for service or item of extra Work on basis of current market price thereof may be accepted without complete itemization of labor, material, and equipment rental costs when it is impracticable and not in accordance with established practice of special service industry to provide complete itemization. In those instances wherein Contractor is required to perform extra Work necessitating a fabrication or machining process in a fabrication or machine shop facility away from Site, charges for that portion of extra Work performed in such facility may, by agreement, be accepted as a specialist billing. Owner must be notified in advance of all off-Site Work. In lieu of overhead and profit provided in paragraph 1.4B of this Section 01250, 15 percent will be added to specialist invoice price, after deduction of any cash or trade discount offered or available, whether or not such discount may have been taken.

1.6 FORCE-ACCOUNT WORK

A. If it is impracticable because of nature of Work, or for any other reason, to fix an increase or decrease in price definitely in advance, the Contractor may be directed to proceed at a not-to-exceed (NTE) maximum price which shall not under any circumstances be exceeded. Subject to such limitation, such extra Work shall be paid for at actual necessary cost for

Force-Account Work or at the negotiated cost, as determined by Owner. The cost for Force-Account Work shall be determined pursuant to paragraphs 1.4 and 1.5 of this Section 01250.

B. Force-Account Work shall be used when it is not possible or practical to price out the changed Work prior to the start of that Work. In these cases, Force-Account Work will be utilized during the pricing and negotiation phase of the change. Once negotiations have been concluded and a bilateral agreement has been reached, the tracking of the Work under Force-Account is no longer necessary. Force-Account Work shall also be used when negotiations between Owner and Contractor have broken apart and a bilateral agreement on the value of the changed Work cannot be reached. Owner may approve other uses of Force-Account Work.

C. Whenever any Force-Account Work is in progress, definite price for which has not been agreed on in advance, Contractor shall report to Owner each Business Day in writing in detail amount and cost of labor and material used, and any other expense incurred in Force-Account Work on preceding Day, by using the Cost Proposal form attached hereto. No claim for compensation for Force-Account Work will be allowed unless report shall have been made.

D. Whenever Force-Account Work is in progress, definite price for which has not been agreed on in advance, Contractor shall report to Owner when 75 percent of the NTE amount has been expended.

E. Force-Account Work shall be paid as extra Work under this Section 01250. Methods of determining payment for Work and materials provided in this paragraph 1.6 shall not apply to performance of Work or furnishings of material that, in judgment of Owner, may properly be classified under items for which prices are otherwise established in Contract Documents.

1.7 OWNER-FURNISHED MATERIALS

A. Owner reserves right to furnish materials as it deems advisable, and Contractor shall have no claims for costs and overhead and profit on such materials.

1.8 OVERHEAD DEFINED FOR MODIFICATIONS

A. The following constitutes charges that are deemed included in overhead for all Contract Modifications, including Force-Account Work or CCD Work, whether incurred by Contractor, Subcontractors, or suppliers, and Contractor shall not invoice or receive payment for these costs separately:
   1. Drawings: field drawings, Shop Drawings, as-builts, etc., including submissions of drawings
   2. Routine field inspection of Work proposed
   3. General superintendence
   4. General administration and preparation of cost proposals, schedule analysis, Change Orders, and other supporting documentation as necessary
   5. Computer services
   6. Reproduction services
   7. Salaries of project engineer, superintendent, timekeeper, storekeeper, and secretaries
   8. Janitorial services
   9. Temporary on-Site facilities:
      a. Offices
      b. Telephones
      c. Plumbing
      d. Electrical: Power, lighting

e. Platforms
f. Fencing, etc.
g. Water
h. Sanitation

10. Home office expenses
11. Insurance and Bond premiums
12. Procurement and use of vehicles and fuel used coincidentally in Work otherwise included in the Contract Documents
13. Surveying
14. Estimating
15. Protection of Work
16. Handling and disposal fees
17. Final cleanup
18. Other incidental Work

1.9 RECORDS AND CERTIFICATION

A. Force-Account (cost reimbursement) charges shall be recorded daily and summarized in Cost Proposal form attached hereto. Contractor or authorized representative shall complete and sign form each Day. Contractor shall also provide with the form: the names and classifications of workers and hours worked by each; an itemization of all materials used; a list by size, type, and identification number of equipment and hours operated; and an indication of all Work performed by specialists.

B. No payment for Force-Account Work shall be made until Contractor submits original invoices substantiating materials and specialists charges.

C. Owner shall have the right to audit all records in possession of Contractor relating to activities covered by Contractor's claims for Modification of Contract, including Force-Account Work and CCD Work.

D. Further, Owner will have right to audit, inspect, or copy all records maintained in connection with this Contract, including financial records and Escrow Bid Documents, in possession of Contractor relating to any transaction or activity occurring or arising out of, or by virtue of, the Contract. If Contractor is a joint venture, right of Owner shall apply collaterally to same extent to records of joint venture sponsor, and of each individual joint venture member. This right shall be specifically enforceable, and any failure of Contractor to voluntarily comply shall be deemed an irrevocable waiver and release of all claims then pending that were or could have been subject to the Article 12 of Document 00700 (General Conditions).

PART 2 PRODUCTS – NOT USED

PART 3 EXECUTION – NOT USED

END OF SECTION

COST PROPOSAL AND REQUEST FOR INFORMATION (RFI) FORMS FOLLOW ON NEXT PAGE

COST PROPOSAL (CP)

North Bay Water Reuse Program - Sonoma Valley Effluent Reservoir R5
Contract Number 70-12-7 #45

CP Number: _____
Date: _____
In Response To _____
RFP #, etc.

To: Sonoma Valley County Sanitation District
Attention: Contract Administration/Inspection
c/o Sonoma County Water Agency
404 Aviation Boulevard, Santa Rosa, CA 95403-9019

Subject Ref. No: _____
(for Project Manager use only)

Phone: (707) 547-1913
Fax: (707) 524-3791

From: [Insert Contractor's Name/Address]
_____
_____

This Cost Proposal is in response to the above-referenced _____ [insert RFP, etc. as applicable].
Brief description of change(s): _____
_____

ITEM DESCRIPTION	PRIME CONTR.	SUB 1	SUB 2	SUB 3	SUB 4	TOTAL
MATERIAL						
DIRECT LABOR COST						
EQUIPMENT						
Other (Specify)						
Total Cost						
Subcontractor's Markup for Overhead and Profit 15 percent						
Contractor's Markup for Overhead and Profit 15 percent (Labor and Materials)						
Contractor's Markup for Overhead and Profit 10 percent (Equipment Rental)						
Markup for Overhead and Profit to Contractor for Subcontractor's Work 5 percent						
GRAND TOTAL						
(percent of Total Cost above not including any Markup for Overhead and Profit) [Grand Total divided by Total Cost]						

REQUESTED CHANGE IN CONTRACT TIME (DAYS)	

By Contractor: _____ Signature: _____ Date: _____

REQUEST FOR INFORMATION (RFI)

North Bay Water Reuse Program - Sonoma Valley Effluent Reservoir R5
Contract Number 70-12-7 #45

RFI Number: _____
Date Submitted: _____

To: Sonoma Valley County Sanitation District
Attention: Contract Administration/Inspection
c/o Sonoma County Water Agency
404 Aviation Boulevard, Santa Rosa, CA 95403-9019
Phone: (707) 547-1913 Fax: (707) 524-3791

From: [Insert Contractor's Name/Address]

Subcontractor: [Insert Sub's Name]

Spec Section or Drawing Reference No.: ___

CONTRACTOR'S QUESTION

Contractor's Signature: Date:

Date Response Required:	Reference to Activity on Progress Schedule:

OWNER'S RESPONSE

Owner's Signature: Date:

SECTION 01315

PROJECT MEETINGS

PART 1 GENERAL

1.1 SUMMARY

A. Section Includes:
   1. Descriptions of the required Project meetings for the Work. These meetings include:
      a. Post-Notice of Award Meeting
      b. Schedule Review Meetings
      c. Preconstruction Conference
      d. Monthly Progress Meetings
      e. Progress Payment Meetings
      f. Optional Submittal Review Meeting
      g. ISO Training Meetings
      h. Special Meetings
      i. Safety Meetings

1.2 POST-NOTICE OF AWARD MEETING

A. Owner will call for and administer a Post-Notice of Award Meeting at time and place to be announced.
B. Contractor's general superintendent, Contractor's foreman, preparer of Safety Program, preparer of SWPPP, if applicable, and all major Subcontractors shall attend this meeting.
C. Agenda will include, but not be limited to, discussion of requirements for the following items:
   1. Insurance
   2. Bonds
   3. Owner's ISO Program and Contractor Requirements
   4. Notice to Proceed
   5. Commencement of Contract Time
   6. Start of Work at Site
   7. Contractor's Initial and Original Schedule
   8. Contractor's Schedule of Values
   9. Contractor's Schedule of Submittals
   10. Submittal and RFI procedures
   11. Safety Program
   12. SWPPP, if applicable
   13. Permits
   14. Name of Owner's Representative
   15. Other items as appropriate
D. Owner will distribute minutes of Post-Notice of Award Meeting to attendees. Attendees shall have 5 Days to submit comments or additions to minutes. Minutes will constitute final memorialization of results of Post-Notice of Award Meeting.

1.3 SCHEDULE REVIEW MEETINGS

A. Within 30 Days of issuance of Notice to Proceed, meet with Owner and conduct initial review of Contractor's draft Schedule of Submittals, draft Schedule of Values, and Initial Schedule.
B. Authorized representative in Contractor's organization, designated in writing, who will be responsible for working and coordinating with Owner relative to preparation and maintenance of Progress Schedule shall attend the initial schedule review meeting.
C. Contractor shall, within 30 Days from the commencement of Contract Time and prior to commencement of Work at the Site, meet with Owner to review the Original Progress Schedule and construction schedule submittals.
   1. Contractor shall have its manager, superintendent, scheduler, and key Subcontractor representatives, as required by Owner, in attendance. The meeting will take place over a continuous one-Day period.
   2. Owner's review will be limited to submittals' conformance to Contract Documents requirements including, but not limited to, coordination requirements. Owner's review may also include:
      a. Clarifications of Contract Requirements
      b. Directions to include activities and information missing from submittals
      c. Requests to Contractor to clarify its schedule
   3. Within 5 Days of the Schedule Review Meeting, Contractor shall respond in writing to all questions and comments expressed by Owner at the meeting.
D. Owner will administer Schedule Review Meetings and shall distribute minutes of Schedule Review Meetings to attendees. Attendees shall have 5 Days to submit comments or additions to minutes. Minutes will constitute final memorialization of results of Schedule Review Meetings.

1.4 PRECONSTRUCTION CONFERENCE

A. Owner will call for and administer Preconstruction Conference at time and place to be announced.
B. Contractor, all major Subcontractors, and major suppliers shall attend Preconstruction Conference.
C. Agenda will include, but not be limited to, the following items.
   1. Revised/updated schedules
   2. Personnel and vehicle permit procedures
   3. Use of premises
   4. Location of the Contractor's on-Site facilities
   5. Security
   6. Housekeeping
   7. Inspection and testing procedures, on-Site and off-Site
   8. Utility shutdown procedures
   9. Control and reference point survey procedures
   10. Safety Program
   11. Jurisdictional agency requirements
   12. Other items as appropriate
D. Owner will distribute copies of minutes to attendees. Attendees shall have 7 Days to submit comments or additions to minutes. Minutes will constitute final memorialization of results of Preconstruction Conference.

1.5 MONTHLY PROGRESS MEETINGS

A. Owner will schedule and administer monthly progress meetings throughout duration of Work. Progress meetings will be held monthly on approximately the 20th of each month.
   1. Meetings shall be held at Contractor's on-Site office unless otherwise directed by Owner.
   2. An Owner Representative will prepare agenda and distribute it at the meeting to Contractor.
   3. Contractor's general superintendent shall attend these meetings.
   4. Owner will record. Approximately 7 Days after meeting, Owner will distribute minutes to Contractor, who will distribute to those affected by decisions made at meeting. Attendees can either submit comments or additions to minutes prior to the next progress meeting, or may attend the next progress meeting and submit comments or additions there. Minutes will constitute final memorialization of results of meeting.

B. These meetings are considered a critical component of overall monthly schedule update submittal and Contractor shall have appropriate personnel attend. Contractor's job superintendent, major Subcontractors and suppliers, Owner, and others as appropriate shall attend progress meetings.

C. Agenda will contain the following items, as appropriate:
   1. Review, revise as necessary, and approve previous meeting minutes
   2. Review of Work progress since last meeting, including percent complete of each activity
   3. Review of the schedule update submittal
      a. Time impact evaluations for Change Orders and Time Extension Request
      b. Actual and anticipated activity sequence changes
      c. Actual and anticipated duration changes
      d. Actual and anticipated Contractor delays
   4. Review the Application for Payment
   5. Status of Construction Work Schedule, delivery schedules, adjustments
   6. Submittal, RFI, and Change Order status
   7. Review of the Contractor's safety program activities and results, including report on all serious injury and/or damage accidents
   8. Other items affecting progress of Work

1.6 PROGRESS PAYMENT MEETINGS

A. Prior to official application for Payment submission, a meeting will be held on approximately the 20th of each month to review the Application for Payment.
   1. At this meeting, the following items will be reviewed:
      a. Percent complete of each activity
      b. Project Schedule
      c. hard-copy updates of the Project Record Drawings (Field Set)
   2. Contractor's general superintendent shall attend these meetings.

1.7 OPTIONAL SUBMITTAL REVIEW MEETING

A. At Owner or Contractor's request, in order to facilitate the timeliness of the review process, Owner may schedule a meeting to review the materials submitted.
   1. Request a meeting date with Owner at least 10 Business Days in advance.
   2. Provide complete package of Submittals at least 10 Business Days in advance of the meeting.
   3. The meeting shall take place at Owner's office. Owner will provide the authorized staff to review Submittals during the meeting.

4. Make available for this meeting the job superintendent and/or foreman, Contractor's safety officer, protective coating manufacturer's representative (if applicable), and someone knowledgeable of all Submittals and authorized to make substitutions or changes.

1.8 ISO TRAINING MEETINGS

A. Owner will conduct on-Site ISO awareness training during the first weekly toolbox safety talk conducted for the Project and as needed thereafter as additional Contractor and Subcontractor staff become active on-Site.

1.9 SPECIAL MEETINGS

A. Owner or Contractor may call special meetings by notifying all desired participants and Owner 5 Days in advance, giving reason for meeting. Special meetings may be held without advance notice in emergency situations.
B. At any time during the progress of Work, Owner shall have authority to require Contractor to attend meeting of any or all of the Subcontractors engaged in Work or in other work, and notice of such meeting shall be duly observed and complied with by Contractor.
C. Contractor shall schedule and conduct coordination meetings as necessary to discharge coordination responsibilities in Document 00700 (General Conditions). Contractor shall give Owner 5 Days written notice of coordination meetings. Contractor shall maintain minutes of coordination meetings. Attendees shall have 7 Days to submit comments or additions to minutes. Minutes will constitute final memorialization of results of coordination meetings.

1.10 SAFETY MEETINGS

A. Conduct monthly Contractor Safety Committee meetings.
B. Conduct weekly toolbox safety talks.

PART 2 PRODUCTS – NOT USED

PART 3 EXECUTION – NOT USED

END OF SECTION

SECTION 01320

PROGRESS SCHEDULES AND REPORTS

PART 1 GENERAL

1.1 SUMMARY

A. Perform scheduling of Work under this Contract in accordance with requirements of this Section 01320.
   1. Development of schedule, cost, and resource loading of the Progress Schedule, monthly payment requests, and Project status reporting requirements of the Contract Documents shall employ scheduling as required in this Section 01320.
   2. The Schedule shall be cost-loaded based on Schedule of Values as approved by Owner.
   3. Submit schedules and reports as specified in Document 00700 (General Conditions).

B. Upon Award of Contract, immediately commence development of Initial Schedule to ensure compliance with schedule submittal requirements.

C. Contractor's obligations under this Section 01320 are hereby deemed material obligations justifying Owner's remedies for default if Contractor fails to perform. Nothing in this paragraph 1.1.C of this Document 01320 or the lack of an express statement that any other Contract Documents provision is or is not material shall be considered in determining whether any such other provision is material.

D. Employ competent scheduling personnel or a schedule consultant with experience performing scheduling required herein on two prior, similar projects.

1.2 GENERAL

A. Progress Schedule shall be based on and incorporate Milestone and completion dates specified in Contract Documents.

B. Overall time of completion and time of completion for each Milestone shown on Progress Schedule shall adhere to times in Document 00520 (Agreement), unless an earlier (advanced) time of completion is requested by Contractor and agreed to by Owner. A Change Order shall formalize any such agreement.
   1. Owner is not required to accept an earlier (advanced) schedule, i.e., one that shows early completion date(s) for the Contract Time.
   2. Contractor is not entitled to extra compensation in event agreement is reached on an earlier (advanced) schedule and Contractor completes its Work, for whatever reason, beyond completion date shown in earlier (advanced) schedule but within the Contract Time.
   3. A schedule showing the Work completed in less than the Contract Time, which has been accepted by Owner, shall be considered to have Project Float. The Project Float is the time between the scheduled completion of the Work and Contract Substantial Completion. Project Float is a resource available to both Owner and Contractor.
   4. Project Float Ownership: Neither Owner nor Contractor owns Project Float. The Project owns the Project Float. As such, liability for delay of any Substantial Completion date rests with the party whose actions, last in time, actually cause delay to a Substantial Completion date.
      a. For example, in the event of unexcused delay by Party A and Party B, and if Party A uses some, but not all of the Project Float and Party B later uses remainder of the

Project Float as well as additional time beyond the Project Float, Party B shall be liable for the time that represents a delay to the Substantial Completion date.

b. Under this scenario, Party A would not be responsible for the time since it did not consume all of the Project Float and additional Project Float remained; therefore, the Substantial Completion Date was unaffected.

C. Progress Schedule shall be the basis for evaluating job progress, payment requests, and time extension requests. Responsibility for developing Contract schedule and monitoring actual progress as compared to Progress Schedule rests with Contractor.

D. Failure of Progress Schedule to include any element of the Work or any inaccuracy in Progress Schedule will not relieve Contractor from responsibility for accomplishing the Work in accordance with the Contract. Owner's acceptance of Schedule shall be for its use in monitoring and evaluating job progress, payment requests, and time extension requests, and shall not, in any manner, impose a duty of care upon Owner, or act to relieve Contractor of its responsibility for means and methods of construction.

E. Transmit each item using form approved by Owner or following Section 01330 (Submittal Procedures).

1. Identify Project with the Owner Contract number, and name of Contractor.
2. Provide space for Contractor's approval stamp and Owner's review stamps.
3. Submittals received from sources other than Contractor will be returned to Contractor without Owner's review.

1.3 INITIAL AND ORIGINAL PROGRESS SCHEDULE

A. Initial Schedule submitted within 21 Days after issuance of Notice to Proceed for review at the initial Schedule Review Meeting shall serve as Contractor's schedule for up to 30 Days after the commencement of Contract Time.

1. Initial Schedule must indicate detailed plan for the Work to be completed in first 30 Days after commencement of Contract Time of the Contract; details of planned mobilization of plant and equipment; sequence of early operations; and procurement of materials and equipment. Show Work beyond 30 Days in summary form.

B. Contractor shall submit its Original Schedule for review no later than first Application for Payment and prior to commencement of Work at the Site. Original Schedule and all updates shall comply with all standards herein.

C. All Schedules shall be time-scaled.

D. All Schedules shall be cost- and resource-loaded. Accepted cost- and resource-loaded Schedule will be used as basis for monthly progress payments. Use of Initial Schedule for progress payments shall not exceed 30 Days.

E. Except as otherwise expressly provided in this Section 01320, meet with Owner to review and discuss each Schedule (i.e., Initial, Original and updates) within seven Days after each Schedule has been submitted to Owner.

1. Owner's review and comment on any Schedule shall be limited to Contract conformance (with sequencing, coordination, and Milestone requirements).
2. Contractor shall make corrections to Schedule necessary to comply with Contract requirements and shall adjust Schedule to incorporate any missing information requested by Owner. Resubmit Initial Schedule if requested by Owner.

F. If Contractor is of the opinion that any of the Work included on its Schedule has been impacted, submit to Owner a written TIE in accordance with paragraph 1.8 of this Section 01320. The TIE shall be based on the most current update of the Schedule.

1.4 SCHEDULE FORMAT AND LEVEL OF DETAIL

A. Each Schedule (Initial, Original, and updates) shall indicate all separate submittals, fabrication, procurement and field construction activities required for completion of the Work, including but not limited to the following:
   1. All Contractor, Subcontractor, and assigned Contractor Work shall be shown in a logical Work sequence that demonstrates a coordinated plan of Work for all contractors. The intent is to provide a common basis of acceptance, understanding, and communication, as well as interface with other contractors.
   2. Incorporate Schedule of Submittals into each Schedule.
   3. Activities related to the delivery of Contractor- and Owner-furnished equipment to be Contractor-installed per Contract shall be shown.
   4. All activities shall be identified through codes or other identification to indicate the building (i.e. buildings, Site Work) and Contractor/Subcontractor responsibility to which they pertain.
   5. Break up the Work schedule into activities of durations of approximately 21 Days or less each, except for non-field construction activities or as otherwise deemed acceptable by Owner.
   6. Show the critical path in red. For each activity, show early start, late start, early finish, late finish, durations measured in Days, Project Float, resources, predecessor and successor activities, planned workday/week for the activity, manpower loading, and scheduled/actual progress payments.

B. Seasonal weather conditions (which do not constitute a delay as defined herein) shall be considered in the planning and scheduling of all Work influenced by high or low ambient temperatures or presence of high moisture for the completion of the Work within the allotted Contract Time.

C. Failure by Contractor to include any element of Work required for performance of the Work on the detailed construction schedule shall not excuse Contractor from completing all Work required within the Contract Time.

D. A two-week "look ahead," detailed daily bar chart schedule shall be updated and issued weekly.

E. Prepare schedule using Microsoft® Office Project, Primavera Contractor®, or Primavera Project Planner® (P3®) software for all scheduling, including schedule updates.

1.5 MONTHLY SCHEDULE UPDATE SUBMITTALS

A. Following acceptance of Contractor's Initial Schedule, monitor progress of Work and adjust Schedule each month to reflect actual progress and any anticipated changes to planned activities.
   1. Each Schedule update submitted shall be complete, including all information requested for the Initial Schedule and Original Schedule submittal.
   2. Each update shall continue to show all Work activities including those already completed. Completed activities (shown in blue) shall accurately reflect "as built" information by indicating when activities were actually started and completed, and Contractor warrants the accuracy of as-built information as shown.

B. A meeting will be held in accordance with Section 01315 (Project Meetings) to review the Schedule update submittal. Submit Schedule updates monthly, 7 Days prior to the Monthly Progress Meeting.

C. Within five Days after monthly Schedule update meeting, submit the updated Schedule.

D. Within five Days of receipt of above-noted revised submittals, Owner will either accept or reject monthly schedule update submittal.
   1. If accepted, percent complete shown in monthly update will be basis for Application for Payment by Contractor. The schedule update shall be submitted as part of Contractor's Application for Payment.
   2. If rejected, update shall be corrected and resubmitted by Contractor before the Application for Payment is submitted.

E. Updating, changing or revising of any report, curve, schedule or narrative submitted to Owner by Contractor under this Contract, nor Owner's review or acceptance of any such report, curve, schedule or narrative shall not have the effect of amending or modifying, in any way, the Contract Substantial Completion date or Milestone dates or of modifying or limiting, in any way, Contractor's obligations under this Contract.

1.6 SCHEDULE REVISIONS

A. Updating the Schedule (Initial and Original) to reflect actual progress shall not be considered revisions to the Schedule. Since scheduling is a dynamic process, however, revisions to activity durations and sequences are expected on a monthly basis.

B. To reflect revisions to the Schedule, provide Owner with a written narrative with a full description and reasons for each Work activity revised. For revisions affecting the sequence of Work, provide a schedule diagram that compares the original sequence to the revised sequence of Work. Provide the written narrative and schedule diagram for revisions three Days in advance of the monthly schedule update meeting. Clearly show and discuss any changes in the critical path.

C. Schedule revisions shall not be incorporated into any schedule update until Owner has reviewed the revisions. Owner may request further information and justification for schedule revisions and, within three Days, provide Owner with a complete written narrative response to Owner's request.

D. If Owner does not accept Contractor's revision, and Contractor disagrees with Owner's position, Contractor has seven Days from receipt of Owner's letter rejecting the revision, to provide a written narrative providing full justification and explanation for the revision. Contractor's failure to respond in writing within seven Days of Owner's written rejection of a schedule revision shall be contractually interpreted as acceptance of Owner's position, and Contractor waives its rights to subsequently dispute or file a claim regarding Owner's position. If Contractor files a timely response as provided in this paragraph, and the parties are still unable to agree, Contractor's sole right shall be to file a claim as provided in Document 00700 (General Conditions), Article 12.

E. At Owner's discretion, Contractor can be required to provide Subcontractor certifications of performance regarding proposed schedule revisions affecting said Subcontractors.

1.7 RECOVERY SCHEDULE

A. If a Schedule update shows a Substantial Completion date 21 Days beyond any Contract Substantial Completion date, or individual Milestone completion dates, submit to Owner within seven Days the proposed revisions to recover the lost time. As part of this submittal, provide a written narrative for each revision made to recapture the lost time. If the revisions include sequence changes, provide a schedule diagram comparing the original sequence to the revised sequence of Work. If Owner reasonably requests, show the intended critical path; secure appropriate Subcontractor and supplier consent to the recovery Schedule; submit a narrative explaining trade flow and construction flow changes,

duration changes, added/deleted activities, critical path changes and identify all near critical paths and man-hour loading assumptions for major Subcontractors.

B. The revisions shall not be incorporated into any Schedule update until Owner has reviewed the revisions.
C. If Owner does not accept Contractor's revisions, Owner and Contractor shall follow the procedures in paragraphs 1.6C, 1.6D, and 1.6E of this Section 01320.
D. At Owner's discretion, Contractor can be required to provide Subcontractor certifications for revisions affecting said Subcontractors.

1.8 TIME IMPACT EVALUATION (TIE) FOR CHANGE ORDERS AND OTHER DELAYS

A. When Contractor is directed to proceed with changed Work, prepare and submit, within 14 Days from the direction to proceed, a TIE that includes both a written narrative and a schedule diagram depicting how the changed Work affects other schedule activities. The schedule diagram shall show how Contractor proposes to incorporate the changed Work in the schedule, and how it impacts the current Schedule update critical path or otherwise. Contractor is also responsible for requesting time extensions based on the TIE's impact on the critical path. The diagram shall be tied to the main sequence of scheduled activities to enable Owner to evaluate the impact of changed Work to the scheduled critical path.
B. Comply with the requirements of paragraph 1.8A of this Section 01320 for all types of delays such as, but not limited to, Contractor/Subcontractor delays, adverse weather delays, strikes, procurement delays, fabrication delays, etc.
C. Contractor is responsible for all costs associated with the preparation of TIEs, and the process of incorporating TIEs into the current schedule update.
D. Once agreement has been reached on a TIE, the Contract Time will be adjusted accordingly. If agreement is not reached on a TIE, the Contract Time may be extended in an amount Owner allows, and Contractor may submit a claim for additional time claimed by Contractor as provided in Document 00700 (General Conditions).

1.9 TIME EXTENSIONS

A. Contractor is responsible for requesting time extensions for time impacts that, in the opinion of Contractor, impact the critical path of the current schedule update. Notice of time impacts shall be given in accordance with Document 00700 (General Conditions).
B. Where an event for which Owner is responsible impacts the projected Substantial Completion date, provide a written mitigation plan, including a schedule diagram, which explains how (e.g., increase crew size, overtime, etc.) the impact can be mitigated. Also include a detailed cost breakdown of the labor, equipment, and material Contractor would expend to mitigate Owner-caused time impact. Submit mitigation plan to Owner within 14 Days from the date of discovery of said impact. Contractor is responsible for the cost to prepare the mitigation plan.
C. Failure to request time, provide TIE, or provide the required mitigation plan will result in Contractor waiving its right to a time extension and cost to mitigate the delay.
D. No time will be granted under the Contract Documents for cumulative effect of changes.
E. Owner will not be obligated to consider any time extension request unless requirements of Contract Documents are complied with.
F. Failure of Contractor to perform in accordance with the current schedule update shall not be excused by submittal of time extension requests.
G. Notwithstanding any other provision of this Section 01320, if Contractor does not submit a TIE within the required 14 Days for any issue, Contractor hereby agrees that Contractor does not require a time extension for that issue.

1.10 PROJECT STATUS REPORTING

A. In addition to submittal requirements for scheduling identified in this Section 01320, provide a monthly Project status report (i.e., written narrative report) to be submitted in conjunction with each Schedule as specified herein. Status reporting shall be in form specified in this paragraph 1.10 below.

B. Prepare monthly written narrative reports of status of Project for submission to Owner. Written status reports shall include:

1. Status of major Project components (percent complete, amount of time ahead or behind schedule) and an explanation of how Project will be brought back on schedule if delays have occurred.
2. Progress made on critical activities indicated on each Schedule, including inspections.
3. Explanations for any lack of Work on critical path activities planned to be performed during last month.
4. Explanations for any schedule changes, including changes to logic or to activity durations.
5. List of critical activities scheduled to be performed during the next month.
6. Status of major material and equipment procurement.
7. Any delays encountered during reporting period.
8. Provide printed report indicating actual versus planned resource loading for each trade and each activity. This report shall be provided on weekly and monthly basis.
   a. Actual resource shall be accumulated in field by Contractor, and shall be as noted on Contractor's daily reports. These reports will be basis for information provided in monthly and weekly printed reports.
   b. Explain all variances and mitigation measures.
9. Contractor may include any other information pertinent to status of Project. Include additional status information requested by Owner at no additional cost.
10. Status reports, and the information contained therein, shall not be construed as claims, notice of claims, notice of delay, or requests for changes or compensation.

PART 2 PRODUCTS – NOT USED

PART 3 EXECUTION – NOT USED

END OF SECTION

SECTION 01330

SUBMITTAL PROCEDURES

PART 1 GENERAL

1.1 SUMMARY

A. Section Includes:
   1. Description of general requirements for Submittals for the Work, as applicable:
      a. Procedures
      b. Schedule of Submittals
      c. Construction Material Waste Management Plan
      d. Safety Program
      e. Progress Schedule
      f. Product Data
      g. Shop Drawings
      h. Samples
      i. Coordination Drawings (If Applicable)
      j. Quality Assurance/Control Submittals
         1) Design Data
         2) Test Reports
         3) Certificates
         4) Manufacturers' Instructions
         5) Work Plans
      k. Installation, Operation, and Maintenance Manual
      l. Project Record Documents
      m. Storm Water Pollution Prevention Program
      n. Delay of Submittals

1.2 PROCEDURES

A. Submit at Contractor's expense the Submittals required by the Contract Documents.
B. Submit Submittals to Owner in accordance with accepted Schedule of Submittals. If no such schedule is agreed upon, then all Submittals shall be submitted within 35 Days after receipt of Notice of Award from Owner.
C. Transmit each item with the appropriate Submittal transmittal form (included at the end of this Section 01330). Where manufacturer's standard drawings or data sheets are used, they shall be marked clearly to show those portions of the data that are applicable to this Project. Inapplicable portions shall be marked out. Organize Submittals by Specification Section. Submittals containing information about more than one Specification Section will be returned for resubmittal. Submittals shall include all information requested by each Specification Section. Incomplete Submittals will be returned not reviewed by Owner.
D. The data shown on the Submittals shall be complete with respect to quantities, dimensions, specified performance and design criteria, materials, and similar data to show Owner the materials and equipment Contractor proposes to provide and to enable Owner to review the information for the limited purposes specified in this Section 01330. Submittals shall be identified clearly as to material, supplier, pertinent data such as catalog numbers and the use for which it is intended and otherwise as Owner may require to enable Owner to review the Submittal.

E. At the time of each submission, give Owner specific written notice of all variations, if any, that the Submittal may have from the requirements of the Contract Documents, and the reasons therefore. This written notice shall be in a written communication attached to the Submittal transmittal form. In addition, cause a specific notation to be made on each Submittal submitted to Owner for review and approval of each such variation. If Owner accepts deviation, Owner will note its acceptance on the returned Submittal transmittal form and, if necessary, issue appropriate Contract Modification.

F. Submittal coordination and verification is the responsibility of Contractor; this responsibility shall not be delegated in whole or in part to Subcontractors or suppliers. Before submitting each Submittal, review and coordinate each Submittal with other Submittals and with the requirements of the Work and the Contract Documents, and determine and verify:
   1. All field measurements, quantities, dimensions, specified performance criteria, installation requirements, materials, catalog numbers, and similar information with respect thereto;
   2. All materials with respect to intended use, fabrication, shipping, handling, storage, assembly, and installation pertaining to the performance of the Work; and
   3. All information relative to Contractor's sole responsibility for means, methods, techniques, sequences, and procedures of construction and safety precautions and programs incident thereto.

G. Contractor's submission to Owner of a Submittal shall constitute Contractor's representation that it has satisfied its obligations under the Contract Documents, and as set forth immediately above in this paragraph 1.2 of this Section 01330, with respect to Contractor's review and approval of that Submittal.

H. Designation of Work "by others," if shown in Submittals, shall mean that Work will be responsibility of Contractor rather than Subcontractor or supplier who has prepared Submittals.

I. After review by Owner of each Submittal, an electronic copy of each Submittal will be returned to Contractor with actions defined as follows:
   1. NO EXCEPTIONS TAKEN - Accepted subject to its compatibility with future Submittals and additional partial Submittals for portions of the Work not covered in this Submittal. Does not constitute approval or deletion of specified or required items not shown on the Submittal.
   2. MAKE CORRECTIONS NOTED (NO RESUBMISSIONS REQUIRED) - Same as item 1 above, except that minor corrections as noted shall be made by Contractor.
   3. REVISE AS NOTED AND RESUBMIT - Rejected because of major inconsistencies or errors that shall be resolved or corrected by Contractor prior to subsequent review by Owner.
   4. REJECTED - RESUBMIT - Submitted material does not conform to Drawings and/or Specifications in major respect, i.e.: wrong size, model, capacity, or material.

J. Make a complete and acceptable Submittal at least by second submission. Owner reserves the right to deduct monies from payments due Contractor to cover additional costs of review beyond the second submission per paragraph 1.2T. Illegible Submittals will be rejected and returned to Contractor for resubmission. Contractor shall be in breach of the Contract if Contractor's first resubmittal, following a Submittal which Owner determines falls within categories 3 or 4 above, does not fall within categories 1 or 2 above.

K. Favorable review will not constitute acceptance by Owner of any responsibility for the accuracy, coordination, or completeness of the Submittals. Accuracy, coordination, and

completeness of Submittals shall be sole responsibility of Contractor, including responsibility to back-check comments, corrections, and modifications from Owner's review before fabrication. Contractor, Subcontractors, or suppliers may prepare Submittals, but Contractor shall ascertain that Submittals meet requirements of Contract Documents, while conforming to structural space and access conditions at point of installation. Owner's review will be only to assess if the items covered by the Submittals will, after installation or incorporation in the Work, conform to the information given in the Contract Documents and be compatible with the design concept of the completed Project as indicated by the Contract Documents. Favorable review of Submittal, method of Work, or information regarding materials and equipment Contractor proposes to furnish shall not relieve Contractor of responsibility for errors therein and shall not be regarded as assumption of risks or liability by Owner, or any officer or employee thereof, and Contractor shall have no claim under Contract Documents on account of failure or partial failure or inefficiency or insufficiency of any plan or method of Work or material and equipment so accepted. Favorable review shall be considered to mean merely that Owner has no objection to Contractor using, upon Contractor's own full responsibility, plan or method of Work proposed, or furnishing materials and equipment proposed.

L. Unless otherwise specified, Owner's review will not extend to the means, methods, techniques, sequences, or procedures of construction or to safety precautions or programs incident thereto. The review and approval of a separate item as such will not indicate approval of the assembly in which the item functions.

M. Submit complete initial Submittal for those items where required by individual Specification Sections. Complete Submittal shall contain sufficient data to demonstrate that items comply with Specifications, shall meet minimum requirements for submissions cited in Specification Sections, shall include motor data and seismic anchorage certifications, where required, and shall include necessary revisions required for equipment other than first named. If Contractor submits incomplete initial Submittal when complete Submittal is required, Submittal may be returned to Contractor without review.

N. Copy, conform, and distribute reviewed Submittals in sufficient numbers for Contractor's files, Subcontractors, and vendors.

O. After Owner's review of Submittal, revise as noted and resubmit as required. Identify changes made since previous Submittal.
   1. Begin no fabrication or Work that requires Submittals until return of Submittals not requiring resubmittal. Do not extrapolate from Submittals covering similar Work.
   2. Normally, Submittals will be processed and returned to Contractor within 30 Days of receipt.

P. Distribute reviewed Submittals to concerned persons. Instruct recipients to promptly report any inability to comply with provisions.

Q. All Submittals shall be number-identified by Contractor, prior to submission to Owner, in accordance with Owner's numbering format. Owner will provide Contractor with sample numbering format.

R. Submission Requirements:
   1. Deliver Submittals to Owner at least 30 Days before dates reviewed Submittals will be needed.
   2. Initial Submittal of Installation, Operation, and Maintenance Manual shall be:
      a. 45 Days after the date Submittal(s) that pertain to the item are favorably reviewed; and
      b. Prior to start-up and testing of the applicable product or equipment.

3. The following table lists the number of initial Submittals required from Contractor for each type of submission and to whom Contractor shall distribute the information. Submittals requiring resubmission will require the same quantity and distribution as an initial Submittal.

Submittal	**Contractor Submittal**	
	# of Hard copies/ Prints/ Samples	Electronic copy
Items Go To →	Owner	Owner
Schedule of Submittals	1	✓
Construction Material Waste Management Plan	1	✓
Monthly Progress Reports for Construction Material Waste Management Plan	1	✓
Safety Program	1	✓
Fire Protection Plan	1	✓
Progress Schedule	1	✓
Product Data	1	✓
MSDSs	1	✓
Shop Drawings	1	✓
Drawings or any documents larger than 11″ x 17″	2	✓
Samples	4	-
Coordination Drawings	1	✓
Quality Assurance/Control Submittals:		
Design Data	1	✓
Test Reports	1	✓
Certificates	1	✓
Manufacturers' Instructions	1	✓
Work Plans	1	✓
Installation, Operation, and Maintenance Manuals (initial submittal)	1	✓
Installation, Operation, and Maintenance Manuals (final submittal)	4	✓
Major Products List	1	✓
Storm Water Pollution Prevention Program	1	✓
Other Documents	1	✓

4. Accompany each copy of the Submittal(s) with a Submittal transmittal form, containing:
   a. Date, revision date, and Submittal identification number.
   b. Project name and Owner's Contract number.
   c. Contractor's name, address, and job number.
   d. Specification Section number clearly identified.
   e. The quantity of Shop Drawings, Product Data, or Samples submitted.
   f. Notification of deviations from Contract Documents.

g. MSDS for each item complying with OSHA's Hazard Communication Standard 29 CFR 1910.1200.
h. Other pertinent data.

5. Submittal shall include:
   a. Date and revision dates.
   b. Revisions, if any, identified.
   c. Project Name and Contract number.
   d. The names of:
      1) Contractor, Subcontractor, Supplier, Manufacturer, and separate detailer, when pertinent.
   e. Identification of product material by location within the Project.
   f. Relation to adjacent structure or materials.
   g. Field dimensions, clearly identified as such.
   h. Specification Section number and applicable detail reference number and Drawing number.
   i. Applicable reference standards, such as ASTM, ANSI, FS, NEMA, SMACNA or ACI.
   j. A blank space, on the first sheet of each Submittal set, 5" x 4" for the Owner's stamp.
   k. Identification of deviations from Contract Documents.

S. Resubmission requirements:
   1. Shop Drawings:
      a. Revise initial Shop Drawings as required and resubmit as specified for initial Submittals.
      b. Indicate on Shop Drawings any changes that have been made other than those requested by Owner.
   2. Product Data and Samples:
      a. Submit new Product Data and Samples as required for initial Submittals.
   3. Installation, Operation, and Maintenance Manual:
      a. Revise initial Installation, Operation, and Maintenance Manual(s) as required and resubmit as specified for initial Submittals.

T. Charge for resubmissions:
   1. One re-examination of Contractor's Submittals that have been returned for correction or replacement will be included in Owner's budget. Any additional re-examination of Contractor's Submittals will be considered additional scope services to be paid by Contractor through Owner. Contractor shall pay Owner (or Owner may deduct from any progress or final payment), for engineering personnel, on an hourly basis at 2.5 times direct payroll expenses, and for consultant personnel time at 1.25 times the amount billed Owner.

1.3 SCHEDULE OF SUBMITTALS

A. Submit a preliminary Schedule of Submittals as required herein and by Document 00700 (General Conditions). Utilize Owner's Submittal Log form to prepare Schedule of Submittals. Owner's Submittal Log form will be provided to Contractor in electronic media format compatible with Microsoft® Excel 2000.

B. Schedule of Submittals will be used by Owner to schedule its activities relating to review of Submittals. Schedule of Submittals shall indicate a spreading out of Submittals and early Submittals of long-lead-time items and of items that require extensive review.

C. Schedule of Submittals will be reviewed by Owner and shall be revised and resubmitted until accepted by Owner.

D. Unless otherwise specified, transmit Submittals for associated items simultaneously to ensure that information is available for checking each item when it is received. Identify on the Submittal transmittal form that such Submittals should be reviewed together.

1.4 CONSTRUCTION MATERIAL WASTE MANAGEMENT PLAN

A. Submit Construction Material Waste Management Plan specific to these Contract Documents as required by Section 01741 (Construction Material Waste Management Plan).

1.5 SAFETY PROGRAM

A. Submit Safety Program specific to these Contract Documents as required by Section 01540 (Site Security and Safety).

1.6 PROGRESS SCHEDULE

A. See Section 01320 (Progress Schedules and Reports) for schedule and report requirements. Section 01320 (Progress Schedules and Reports) shall control in any conflict with this Section 01330.
B. Progress schedules, schedule updates, and reports shall be submitted using software described in paragraph 1.4E of Section 01320 (Progress Schedules and Reports). Electronic files shall be complete copies, including all programs and electronic coding.

1.7 PRODUCT DATA

A. Within ten Days after Contract Time commences to run, submit complete list of major products proposed for use (included at the end of this Section 01330), with name of manufacturer, telephone number, trade name, and model number of each product. Tabulate data by Specification Section.
B. Product or Catalog Data:
   1. Manufacturers' standard drawings shall be modified to delete non-applicable data or include applicable data.
   2. Manufacturers' catalog sheets, brochures, diagrams, schedules, charts, illustrations, and other standard descriptive data:
      a. Mark each copy to identify pertinent materials, products, or models.
      b. Show dimensions and clearances required, performance characteristics and capacities, wiring diagrams and controls.
   3. For products specified only by reference standards, give manufacturer, trade name, model or catalog designation, and reference standards.
   4. Material Safety Data Sheets:
      a. In addition to MSDSs otherwise required by the Contract Documents, submit MSDSs for any products containing a hazardous substance such as paints, solvents, thinners, varnish, lacquer, glues and adhesives, mastics, sealants, equipment fuel, equipment lubricant, or other materials needed for the Project as required by the individual Specification Sections or as otherwise specified in the Contract Documents.
      b. MSDSs must be submitted with Product Data Submittal in order for the Submittal to be reviewed.
C. Supplemental Data:
   1. Mark each copy to identify applicable products, models, options, and other data. Supplement manufacturer's standard data to provide information unique to Project.

1.8 SHOP DRAWINGS

A. Minimum Sheet Size: 8½ inches by 11 inches. All others: Multiples of 8½ inches by 11 inches, 34 inches by 44 inches maximum.
B. The electronic copy will be marked with Owner's review comments and returned to Contractor.
C. Mark each copy to identify applicable products, models, options, and other data; supplement manufacturers' standard data to provide information unique to Work.
D. Include manufacturers' installation instructions when required by Specification Section.
E. If Contractor submits Shop Drawings for items that Shop Drawings are not specified, Owner will not be obliged to review them.
F. Contractor is responsible for procuring copies of Shop Drawings for its own use as it may require for the progress of the Work.
G. Shop Drawings shall be drawn to scale and completely dimensioned, showing plan view together with such sectional views as are necessary to clearly show construction detail, materials, and methods.

1.9 SAMPLES

A. Submit full range of manufacturers' standard colors, textures, and patterns for Owner's selection.
B. Submit Samples to illustrate functional and aesthetic characteristics of product, with integral parts and attachment devices. Coordinate Submittal of different categories for interfacing Work.
C. Include identification on each Sample, giving full information.
D. Sizes: Unless otherwise specified, provide the following:
   1. Paint Chips: Manufacturers' standard
   2. Flat or Sheet Products: Minimum 6 inches square, maximum 12 inches square
   3. Linear Products: Minimum 6 inches, maximum 12 inches long
   4. Bulk Products: Minimum 1 pint, maximum 1 gallon
E. Full size Samples may be used in Work upon approval by Owner.
F. Field Samples and Mock-ups (if applicable):
   1. Erect field Samples and mock-ups at Site in accordance with requirements of Specification Sections. If testing is conducted, record and certify results and full Contract compliance.
   2. Modify or make additional field Samples and mock-ups as required to provide appearance and finishes approved by Owner.
   3. Approved field Samples and mock-ups may be used in Work upon approval by Owner.
   4. Construct or prepare as many additional Samples as may be required, as directed by the Owner, until desired textures, finishes, and/or colors are obtained.
   5. Accepted Samples and mock-up shall serve as the standard of quality for the various units of Work.
G. No review of a Sample shall be taken in itself to change or modify the requirements in the Contract Documents.
H. Finishes, materials, and workmanship in the completed Work shall match accepted Samples.
I. Samples will not be returned to Contractor.

1.10 COORDINATION DRAWINGS (IF APPLICABLE)

A. Layout Drawings: As soon as practical and in no case starting later than 30 Days after issuance of Notice to Proceed, Contractor shall prepare layout drawings of all equipment and piping at not less than ¼" scale. The layout drawings shall show the location of all equipment as well as locations of all valves, piping, fittings, and other items requiring access for service and maintenance. The layout drawings shall also show beams, ceiling heights, walls, floor-to-floor dimensions, columns, doors and other major architectural and structural drawings.
   1. At Contractor's option, the layout drawings may be produced using computer-aided drafting.

B. Coordination with Subcontractors: Within 30 Days after the date of the Notice to Proceed, send one reproducible and two prints of the layout drawings to Subcontractors who shall then make on the reproducible their own routings, etc., as required to determine interrelationship and possible interferences with mechanical equipment, piping and architectural or structural features. The marked-up reproducibles shall then be returned to Contractor no less than 30 Days after receipt by the Subcontractors.

C. Composite Drawings: Contractor shall prepare preliminary composite drawings of such layout drawings, incorporating all the information and routings provided by the Subcontractors. (At Contractor's option, a group of transparent overlays may be substituted, provided that they clearly show the relationship of all proposed installations and they are pin-registered/aligned.)
   1. The preliminary composite drawings or the overlays shall be reviewed during a series of meetings called by Contractor and attended by Owner, at which all Subcontractors and trades shall be represented in order to review and resolve any real or apparent interferences or conflicts.

D. Agreement by Subcontractors: After all conflicts or interferences are resolved, Contractor shall develop a final set of composite drawings showing the agreed-upon routing, layout and juxtaposition of all , piping, major conduit, valves, panels, controls, lighting fixtures and all major mechanical and electrical installations. In areas where no mechanical and electrical installations are installed, each Subcontractor shall be responsible for its own Work and pay its own costs in connection therewith. In preparation of all the final composite drawings, large scale details as well as cross and longitudinal sections shall be prepared as required to fully delineate all conditions. Particular attention shall be given to the locations, size, and clearance dimensions of equipment items, shafts, and similar features. These final composite drawings shall then be signed off by Subcontractors and Contractor, indicating their awareness of and agreement with the indicated routings and layouts and their interrelationship with the adjoining or contiguous Work. Thereafter, no unauthorized deviations will be permitted and, if made without knowledge or agreement of Owner, such unauthorized Work will be subject to removal and correction at no additional cost to Owner.

E. Minor Changes: In preparing the composite drawings, minor changes in duct, pipe or conduit routings that do not affect the intended function may be made as required to avoid space conflicts, when mutually agreed, but items may not be resized or exposed items relocated without Owner's written approval. No changes shall be made in any wall or chase locations, ceiling heights, door swings or locations, window or other openings or other features affecting the function or aesthetic effect of the building. If conflicts or interferences cannot be satisfactorily resolved, Owner shall be notified and Owner's decision obtained.

F. Distribution of Composite Drawings: After the final composite drawings have been agreed upon and signed by all Subcontractors, provide and distribute four prints and one electronic copy to each of the Subcontractors for reference and record purposes. Make similar distribution of all supplementary composite drawings, initiated by other Subcontractors. Also provide final composite drawings to Owner. All Subcontractors desiring additional prints of such drawings, beyond the basic distribution indicated above in this paragraph 1.10F, shall arrange for and pay the cost of same.

G. Record Composite Drawings: The record copies of the final composite drawings shall be retained by Owner, Contractor, and each Subcontractor as a working reference. All Shop Drawings, prior to their Submittal to Owner, shall be compared with the composite drawings and developed accordingly by Contractor and the responsible Subcontractor. Any revisions to the composite drawings that may become necessary during the progress of the Work shall be noted by Contractor and all Subcontractors and shall be neatly and accurately recorded on the record copies. Contractor and each Subcontractor shall be responsible for the up-to-date maintenance of Subcontractor record copies of the composite drawings and for keeping two copies available at the Site. Contractor and each Subcontractor shall utilize the composite drawings, and any subsequent changes thereto, in the development of Subcontractor "Project Record Documents" drawings.

H. Timely Submission: The composite drawings need not be submitted as a whole, but shall be submitted in all cases in ample time to avoid construction delay. The coordination drawings may lack complete data in certain instances pending receipt of Shop Drawings, but sufficient space shall be allotted for the items affected. When final information is received, such data shall be promptly inserted on the composite drawings.

I. Improperly Coordinated Work: No extra compensation will be paid for relocating any duct, pipe, conduit, or other material that has been installed without proper coordination between Contractor and all Subcontractors involved. If any improperly coordinated Work or Work installed that is not in accordance with the approved composite drawings, necessitates additional Work by Contractor or other Subcontractors, the costs of all such Work shall be borne solely by Contractor or the Subcontractor responsible for the Work.

J. Incorporation of Changes: All changes in the scope of Work due to revisions formally issued and approved shall be shown on the composite drawings.

K. Quality Draftsmanship: All Work on Shop Drawings, layout drawings, coordination drawings, and composite drawings shall be performed by competent drafters and shall be clear and fully legible. Owner shall be the sole judge of the acceptability of the drawings.

L. Structural Cutting: Obtain specific positive written instructions from Owner before cutting beams or other structural members, walls, arches, or lintel, and comply with such instructions.

1.11 QUALITY ASSURANCE/CONTROL SUBMITTALS

A. Design Data:
   1. Indicate that material or product conforms to or exceeds specified requirements.

B. Test Reports:
   1. Indicate that material or product conforms to or exceeds specified requirements.
   2. Reports may be from recent or previous tests on material or product, but shall be acceptable to Owner. Comply with requirements of each individual Specification Section.

C. Certificates:
   1. Indicate that material or product conforms to or exceeds specified requirements.
   2. Submit supporting reference data, affidavits, and certifications as appropriate.
   3. Certificates may be recent or from previous test results on material or product, but shall be acceptable to Owner.
D. Manufacturers' Instructions:
   1. Include manufacturers' printed instructions for delivery, storage, assembly, installation, startup, adjusting, and finishing.
   2. Identify conflicts between manufacturers' instructions and Contract Documents.
E. Work Plans:
   1. Submit work plans with sufficient detail to clearly indicate compliance with Specification requirements and to clearly describe by what means and methods Contractor intends to execute the subject Work.

1.12 INSTALLATION, OPERATION, AND MAINTENANCE MANUAL (IF APPLICABLE)

A. Sheet Size: 8½ x 11 inch
B. Drawing Size: Reduce drawings or diagrams to an 8½ x 11 inch or 11 x 17 inch size. However, where reduction is not practical to ensure readability, fold larger drawings separately and place in vinyl envelopes bound into the binder. Identify vinyl envelopes with drawing numbers.
C. Binding: Bind in heavy-duty white vinyl D-ring binders (locking rings), not more than 3" thick, with standard three-hole punch, two inside pockets, and a clear overlay (front pocket). Binder shall be no more than 80% full.
D. Multiple Items: Multiple items may be combined into one binder; tab each section with plastic-coated dividers.
E. Volumes: create volumes, numbered sequentially, as appropriate.
F. Page Protectors: Provide plastic sheet lifters prior to first page and following last page.
G. Binder title: Include the following title on front and spine of binder(s):

North Bay Water Reuse Program -
Sonoma Valley Effluent Reservoir R5
INSTALLATION, OPERATION, AND MAINTENANCE MANUAL, [YEAR]
VOLUME [__(number) of __(total number of volumes)]

H. Contents:
   1. Introductory Information:
      a. Title page providing the same information as paragraph 1.12G above
      b. Contractor's name, address, and telephone number
      c. Table of Contents: include a complete table of contents in each volume, if applicable
   2. Include, at a minimum, the following detailed information for each item as applicable and as required by individual Specification Sections:
      a. Bill of materials: include manufacturer, complete model number, quantity, and equipment location.
      b. Operational information:
         1) Equipment function, normal operating characteristics, limiting operations.
         2) Operating instructions for startup, routine and normal operation, regulation and control, shutdown, and emergency conditions.
         3) A list of recommended spare parts with a price list, predicted life of parts subject to wear, and a list of spare parts provided under this Contract.

4) Instrumentation or tag numbers relating the equipment back to the Contract Documents.

c. Maintenance information:
1) Assembly, disassembly, installation, alignment, adjustment, and checking instructions.
2) Lubrication and maintenance instructions including specific type and amount of lubricant and recommended lubrication interval.
3) Outline, cross-section, and assembly drawings; engineering data; and electrical diagrams, including elementary diagrams, labeled wiring diagrams, connection diagrams, word description of wiring diagrams and interconnection diagrams.
4) Test data and performance curves.
5) Parts lists or other documents packed with equipment when delivered.
6) Instrumentation or tag numbers relating the equipment back to the Contract Documents.

d. Troubleshooting guide.
e. Delete information that is not pertinent to the Project.

3. Index: alphabetical by keyword

I. Final Submittal: Upon favorable review of Installation, Operation, and Maintenance Manual(s) by Owner, deliver the final approved Installation, Operation, and Maintenance Manual(s). Electronic media format copy shall include all tables, charts, drawings, codes and all other matters reflected in hard copies.

1.13 PROJECT RECORD DOCUMENTS

A. Submit Project Record Documents as required by Section 01780 (Project Record Documents).

1.14 STORM WATER POLLUTION PREVENTION PROGRAM (IF APPLICABLE)

A. Submit Storm Water Pollution Prevention Program if required by Section 01500 (Temporary Facilities and Controls).

1.15 DELAY OF SUBMITTALS

A. Delay of Submittals by Contractor is considered avoidable delay. Liquidated damages incurred because of late Submittals will be assessed to Contractor.

PART 2 PRODUCTS – NOT USED

PART 3 EXECUTION – NOT USED

END OF SECTION

MAJOR PRODUCTS LIST AND TRANSMITTAL FORMS FOLLOW THIS PAGE

MAJOR PRODUCTS LIST

	Specification Section Number	Product	Name of Manufacturer, Trade Name, Model Number	Telephone number
1.	02605	High-Density Polyethylene Liner		
2.	15064	18-inch Recycled Water Pipe		
3.	11072	Vertical Turbine Pump		
4.	15115	Slide Gate		

SUBMITTAL, TRANSMITTAL NO. _____

Project Name: North Bay Water Reuse Program - Sonoma Valley Effluent Reservoir R5		Date Received:
Owner: Sonoma Valley County Sanitation District Attention: Construction Management Section 404 Aviation Boulevard Santa Rosa, CA 95403-9019		Checked By:
Contractor: Address: Attention:	HDR 2365 Iron Point Road, Suite 300 Folsom, CA 95630 Attention: Craig Olson	Log Page: Specification Section Number: 1st Submittal ☐ Resubmittal ☐

By Date

Contractor's signature above shall constitute Contractor's representation that it has satisfied its obligations under the Contract Documents with respect to Contractor's review and approval of Submittals.

Date Transmitted:	Previous Transmittal Date:

No. Copies	Description	Manufacturer	Dwg. or Data No.	Action Taken*

Remarks:

* The action designated above is in accordance with the following legend:

A – No Exceptions Taken
B – Make Corrections Noted (No Resubmission Required)
C – Revise as Noted and Resubmit
D – Rejected - Resubmit
1. Not enough information for review
2. No reproducibles submitted
3. Copies illegible
4. Not enough copies submitted
5. Wrong sequence number
6. Wrong resubmittal number
7. Wrong Specification section number
8. Wrong form used
9. See comments

Comments:

By Date

INSTALLATION, OPERATION, AND MAINTENANCE MANUAL, TRANSMITTAL NO. _____

Project Name: North Bay Water Reuse Program - Sonoma Valley Effluent Reservoir R5		Date Received:
Owner: Sonoma Valley County Sanitation District 404 Aviation Boulevard Santa Rosa, CA 95403-9019		Attention: Construction Management Section
Contractor: Address: Attention:	HDR 2365 Iron Point Road, Suite 300 Folsom, CA 95630 Attention: Craig Olson	Log Page: Specification Section Number: 1st Submittal ☐ Resubmittal ☐

By Date

Contractor's signature above shall constitute Contractor's representation that it has satisfied its obligations under the Contract Documents with respect to Contractor's review and approval of Submittals.

Date Transmitted:	Previous Transmittal Date:

No. Copies	Description	Manufacturer	Dwg. or Data No.	Action Taken*

Remarks:

* The action designated above is in accordance with the following legend:

A – No Exceptions Taken

B – Make Corrections Noted (No Resubmission Required)

C – Revise as Noted and Resubmit

D – Rejected - Resubmit– this manual Submittal is deficient in the following area:

1. Equipment record sheets
2. Functional description
3. Assembly, disassembly, installation, alignment, adjustment, and checkout instructions
4. Operating instructions

D – (continued)

5. Lubrication and maintenance instructions
6. Troubleshooting guide
7. Parts list and ordering instructions
8. Organization (indexing and tabbing)
9. Wiring diagrams and schematics specific to installation
10. Outline, cross section, and assembly diagrams
11. Test data and performance curves
12. Tag or equipment identification numbers
13. See comments

Comments:

By Date

SECTION 01410

REGULATORY REQUIREMENTS

PART 1 GENERAL

1.1 SUMMARY

A. Section includes: regulatory requirements that may be applicable to Contract Documents.
B. Specific reference in the Specifications to codes and regulations or requirements of regulatory agencies shall mean the latest printed edition of each adopted by the regulatory agency in effect at the time of the opening of Bids, except as may be otherwise specifically stated in the Contract Documents.
C. Should any conditions develop not covered by the Contract Documents wherein the finished Work will not comply with current codes, a Change Order detailing and specifying the required Work shall be submitted to and approved by Owner before proceeding with the Work.

1.2 REFERENCES TO REGULATORY REQUIREMENTS

A. Codes, laws, ordinances, rules and regulations referred to shall have full force and effect as though printed in full in these Specifications. Code, laws, ordinances, rules and regulations are not furnished to Contractor, because Contractor is assumed to be familiar with these requirements. The listing of applicable codes, laws, and regulations for hazardous waste abatement Work in the Contract Documents is supplied to Contractor as a courtesy and shall not limit Contractor's responsibility for complying with all applicable laws, regulations, or ordinances having application to the Work. Where conflict among the requirements or with these Specifications occurs, the most stringent requirements shall be used.
B. Conform to referenced codes, laws, ordinances, rules and regulations.

1.3 CODES

A. Codes that apply to Contract Documents include, but are not limited to, the following:
   1. CBC (Part 2, Title 24, CCR, including, without means of limitation, Sections 16A, 102A.23, 308, 420A, 504-506, 904.2.6, 1019 and 1604)
   2. CEC (Part 3, Title 24, CCR)
   3. CMC (Part 4, Title 24, CCR)
   4. CPC (Part 5, Title 24, CCR),
   5. State Elevator Safety Regulations (Part 7, Title 24, CCR)
   6. UBC
   7. UPC
   8. UMC
   9. NEC
   10. Sonoma County Code

1.4 LAWS, ORDINANCES, RULES, AND REGULATIONS

A. During prosecution of Work to be done under Contract Documents, comply with applicable laws, ordinances, rules and regulations, including, but not limited to, the following:
   1. Federal:
      a. Americans With Disabilities Act of 1990
      b. 29 CFR, Section 1910.1001, Asbestos

c. 40 CFR, Subpart M, National Emission Standards for Asbestos
d. Executive Order 11246
e. Federal Endangered Species Act
f. Clean Water Act

2. State of California:
   a. California Code of Regulations, Titles 5, 8, 19, 21, 22, 24 and 25
   b. California Public Contract Code
   c. California Health and Safety Code
   d. California Government Code
   e. California Labor Code
   f. California Civil Code
   g. California Code of Civil Procedure
   h. CPUC General Order 95, Rules for Overhead Electric Line Construction
   i. CPUC General Order 128, Rules for Construction of Underground Electric Supply and Communications Systems
   j. Cal/OSHA
   k. OSHA: Hazard Communications Standards
   l. California Endangered Species Act
   m. Water Code
   n. Fish and Game Code
3. State of California Agencies:
   a. State and Consumer Services Agency
   b. Office of the State Fire Marshall
   c. Office of Statewide Health Planning and Development
   d. Department of Fish and Game
   e. Bay Area Air Quality Management District
   f. San Francisco Bay Regional Water Quality Control Board
   g. North Coast Regional Water Quality Control Board
      1) Order No. 93-61
      2) Order No. 81-73
      3) Clean Water Act Section 401
4. County of Sonoma:
   a. Ordinance 3836R
   b. Building permit
   c. Electrical permit
   d. Grading permit
   e. Encroachment permit
   f. Valley Oak Protection Ordinance
5. Local Agencies:
   a. Applicable City Ordinances
   b. Northern Sonoma County Air Pollution Control District
6. Other Requirements:
   a. National Fire Protection Association (NFPA): Pamphlet 101, Life Safety.
   b. References on Drawings or in Specifications to "code" or "building code" not otherwise identified shall mean the codes specified in this Section 01410, together with all additions, amendments, changes, and interpretations adopted by code authorities of the jurisdiction.

B. Have access to all of the foregoing within 24 hours.

C. Other Applicable Laws, Ordinances and Regulations:
   1. Work shall be accomplished in conformance with all applicable laws, ordinances, rules and regulations of federal, state, and local governmental agencies and jurisdictions having authority over the Project.
   2. Work shall be accomplished in conformance with all rules and regulations of public utilities and utility districts.
   3. Where such laws, ordinances rules, and regulations require more care or greater time to accomplish Work, or require better quality, higher standards or greater size of products, Work shall be accomplished in conformance to such requirements with no change to the Contract Time and Contract Sum, except where changes in laws, ordinances, rules, and regulations occur subsequent to the time of opening of the Bids.

D. Change Orders and Claims. The California Public Contract Code (including but not limited to Section 7105 (d)(2)) applies to all contract procedures for changes, time extensions, change orders (time and money), and claims, and per California Government Code Section 930.2, et seq., Contractor's timely compliance with these procedures is a mandatory prerequisite to filing a Government Code Claim. Any change, alteration, modifications, waiver, or omission to implement these procedures, shall have no legal effect unless approved in advance in a fully executed Change Order approved by the Board. Federal construction law (U.S. v. Holspuch 326 U.S. 234) and the jurisprudence of the Federal District of Columbia Circuit shall supplement (but not supersede) California law on construction claims topics including but not limited to, termination claims, home office overhead claims, and delay/disruption claims.

1.5 PRECEDENCE

A. Where Drawings or Specifications require or describe products or execution of better quality, higher standard or greater size than required by applicable codes, ordinances and standards, Drawings and Specifications shall take precedence so long as such increase is legal.

B. Where no requirements are identified on Drawings or in Specifications, comply with all requirements of applicable codes, ordinances and standards of governing authorities having jurisdiction.

C. Conflicts between referenced regulatory requirements: Comply with the one establishing the more stringent requirement.

D. Conflicts between referenced regulatory requirements and Contract Documents: Comply with the one establishing the more stringent requirement.

1.6 REQUIRED PROVISIONS ON CONTRACT CLAIM RESOLUTION

A. The California Public Contract Code specifies required provisions on resolving contract claims less than $375,000, which are set forth below, and constitute a part of this Contract.
   1. For the purposes of this section, "Claim" means a separate demand by Contractor of $375,000 or less for (1) a time extension, (2) payment or money or damages arising from Work done by or on behalf of Contractor arising under the Contract Documents and payment of which is not otherwise expressly provided for or the Claimant is not otherwise entitled to, or (3) an amount the payment of which is disputed by Owner. In order to qualify as a Claim, the written demand must state that it is a Claim submitted under Article 12 of Document 00700 (General Conditions) and be submitted in compliance with all requirements of Document 00700 (General Conditions), Article 12. Separate Claims which total more than $375,000 do not qualify as a "separate demand of $375,000 or less," as referenced above, and are not subject to this section.

2. A voucher, invoice, payment application, or other routine or authorized form of request for payment is not a Claim for purposes of this section. If such request is disputed as to liability or amount, then the disputed portion of the submission may be converted to a Claim under this section by submitting a separate claim in compliance with Contract Documents claim submission requirements.
3. Caution: This section does not apply to tort claims and nothing in this section is intended nor shall be construed to change the time periods for filing tort claims or actions specified by Chapter 1 and Chapter 2 of Part 3 of Division 3.6 of Title 1 of the California Government Code.

B. Procedure:
1. The Claim must be in writing, submitted in compliance with all requirements of Document 00700 (General Conditions), Article 12, including, but not limited to, the time prescribed by and including the documents necessary to substantiate the Claim, pursuant to Document 00700 (General Conditions), paragraph 12.3. Claims must be filed on or before the day of final payment. Nothing in this section is intended to extend the time limit or supersede notice requirements for the filing of claims as set forth in Document 00700 (General Conditions), Article 12 or elsewhere in the Contract Documents.
2. For Claims of fifty thousand dollars ($50,000) or less
   a. Owner shall respond in writing within 45 days of receipt of the Claim, or
   b. Owner may request in writing within 30 days of receipt of the Claim, any additional documentation supporting the Claim or relating to any defenses or claims Owner may have against Claimant.
      1) If additional information is thereafter required, it shall be requested and provided in accordance with this section, upon mutual agreement of Owner and Claimant.
      2) Owner's written response to the Claim, as further documented, shall be submitted to Claimant within 15 days after receipt of further documentation or within a period of time no greater than taken by Claimant in producing the additional information, whichever is greater.
3. For Claims over Fifty Thousand Dollars ($50,000) and less than or equal to $375,000:
   a. Owner shall respond in writing within 60 days of receipt of the Claim, or
   b. Owner may request in writing within 30 days of receipt of the Claim, any additional documentation supporting the Claim or relating to any defenses or claims Owner may have against Claimant.
      1) If additional information is thereafter required, it shall be requested and provided in accordance with this section, upon mutual agreement of Owner and Claimant;
      2) Owner's written response to the Claim, as further documented, shall be submitted to Claimant within 30 days after receipt of further documentation or within a period of time no greater than taken by Claimant in producing the additional information, whichever is greater.
4. Meet and Confer:
   a. If Claimant disputes Owner's written response, or Owner fails to respond within the time prescribed above, Claimant shall notify Owner, in writing, either within 15 days of receipt of Owner's response or within 15 days of Owner's failure to timely respond, and demand an informal conference to meet and confer for settlement of

the issues in dispute. Upon demand Owner will schedule a meet and confer conference within 30 days for settlement of the dispute.

b. Following the meet and confer conference, if the Claim or any portion remains in dispute, Claimant may file a claim as provided in Chapter 1 (commencing with Section 900) and Chapter 2 (commencing with Section 910) of Part 3 of Division 3.6 of Title 1 of the California Government Code. For purposes of those provisions, the running of the period of time within which a claim must be filed shall be tolled from the time Claimant submits its written claim as set forth in paragraph 12.2.B of Document 00700 (General Conditions), until the time that Claim is denied as a result of the meet and confer process, including any period of time utilized by the meet and confer process.

1.7 COMPLIANCE WITH AMERICANS WITH DISABILITIES ACT

A. Contractor acknowledges that, pursuant to the Americans with Disabilities Act (ADA), programs, services, and other activities provided by a public entity to the public, whether directly or through a contractor, must be accessible to the disabled public. Contractor shall provide the services specified in the Contract Documents in a manner that complies with the ADA and any and all other applicable federal, state, and local disability rights legislation. Contractor agrees not to discriminate against disabled persons in the provision of services, benefits, or activities provided under this Agreement and further agrees that any violation of this prohibition on the part of Contractor, its employees, agents, or assigns shall constitute a material breach of the Contract Documents.

1.8 SUBSTITUTION OF SECURITIES IN LIEU OF RETENTION

A. In accordance with the provisions of Public Contract Code Section 22300, substitution of securities for any moneys withheld under Contract Documents to ensure performance is permitted under following conditions:

1. At request and expense of Contractor, securities listed in Section 16430 of the Government Code, bank or savings and loan certificates of deposit, interest bearing demand deposit accounts, standby letters of credit, or any other security mutually agreed to by Contractor and Owner which are equivalent to the amount withheld under retention provisions of Contract shall be deposited with Controller or with a state or federally chartered bank in California, as the escrow agent, who shall then pay such moneys to Contractor. Upon satisfactory completion of Contract, securities shall be returned to Contractor.
2. Alternatively, Contractor may request and Owner shall make payment of retentions earned directly to the escrow agent at the expense of Contractor. At the expense of Contractor, Contractor may direct the investment of the payments into securities and receive the interest earned on the investments upon the same terms provided for in this Section 01410 for securities deposited by Contractor. Upon satisfactory completion of Contract Documents, Contractor shall receive from escrow agent all securities, interest, and payments received by the escrow agent from Owner, pursuant to the terms of this Section 01410. Pay to each Subcontractor, not later than 20 Days after receipt of the payment, the respective amount of interest earned, net of costs attributed to retention withheld from each Subcontractor, on the amount of retention withheld to insure the performance of Contractor.
3. Contractor shall be beneficial owner of securities substituted for moneys withheld and shall receive any interest thereon.

4. Enter into escrow agreement with Controller according to Document 00680 (Escrow Agreement for Security Deposits in Lieu of Retention), as authorized under Public Contract Code Section 22300, specifying amount of securities to be deposited, terms and conditions of conversion to cash in case of default of Contractor, and termination of escrow upon completion of Contract Documents.
5. Public Contract Code Section 22300 is hereby incorporated in full by this reference.

PART 2 PRODUCTS – NOT USED

PART 3 EXECUTION – NOT USED

END OF SECTION

SECTION 01411

REGULATORY REQUIREMENTS - HAZARDOUS MATERIALS

PART 1 GENERAL

1.1 SUMMARY

A. Section Includes:
   1. Regulatory requirements applicable to Work in connection with hazardous waste abatement and disposal including, but not limited to, Asbestos and Asbestos-containing materials, lead-based paint, polychlorinated biphenyls, petroleum-contaminated soils and materials, construction and demolition debris and any other hazardous substance or hazardous waste.

B. This Section supplements Section 01410 (Regulatory Requirements) and the Work-specific listings of applicable regulatory requirements elsewhere in the Specifications.

1.2 LAWS, ORDINANCES, RULES, AND REGULATIONS

A. During prosecution of Work under Contract Documents, Contractor shall comply with applicable laws, ordinances, rules and regulations including, but not limited to, those listed below.

B. Federal:
   1. Statutory Requirements:
      a. Resource Conservation and Recovery Act, 42 U.S.C. Sections 6901 *et seq*.
      b. Comprehensive Environmental Response, Compensation and Liability Act of 1980, as amended by the Superfund Amendments and Reauthorization Act of 1986, 42 U. S.C. Sections 9601 *et seq*.
      c. Toxic Substances Control Act of 1976, 15 U.S.C., Sections 2601 *et seq*.
      d. Hazardous Materials Transportation Act of 1975, 49 U.S.C. Sections 1801 *et seq.*
      e. Clean Water Act, 33 U.S.C. Sections 1251 *et seq.*
      f. Safe Drinking Water Act, 42 U.S.C., Sections 3001 *et seq.*
      g. Clean Air Act, Section 112, 42 U.S.C., Section 7412
      h. Occupational Safety and Health Act of 1970, 29 U.S.C., Sections 651 *et seq.*
      i. Underground Storage Tank Law, 42 U.S.C., Sections 6991 *et seq.*
      j. The Emergency Planning and Community Right to Know Act of 1986, 42 U.S.C., Sections 11011 *et seq.*
   2. Environmental Protection Agency (EPA):
      a. 40 C.F.R. Parts 260, 264, 265, 268, 270
      b. 40 C.F.R. Parts 258 *et seq.*
      c. 40 C.F.R. Part 761
      d. 40 C.F.R. Parts 122-124
   3. Occupational Safety and Health Administration (OSHA):
      a. OSHA Worker Protection Standards, Title 29 C.F.R. Part 1926.58, Construction Standards and 29 C.F.R. 1910.1001 General Industry Standard
      b. OSHA, 29 C.F.R. Part 1926.1101, Construction Standards for Asbestos
      c. OSHA, Lead Exposure in Construction: Interim Final Rule, 29 C.F.R. 1926.62
      d. National Emission Standard for Hazardous Air Pollutants, Title 40 C.F.R. Part 61
      e. Asbestos Hazardous Emergency Response Act, Title 40 C.F.R. 763

4. Department of Transportation:
    a. Title 49 C.F.R. 173.1090
    b. Title 49 C.F.R. 172
    c. Title 49 C.F.R. 173
    d. DOT, HM 181 and MH126f

C. State of California Requirements:
1. Statutory Law:
    a. The Carpenter-Presley-Tanner Hazardous Substance Account Act, Health & Safety Code, Sections 25300 *et seq.*
    b. Health and Safety Code, Section 25359.4
    c. Hazardous Waste Control Law, Health & Safety Code, Sections 25100 *et seq.*
    d. Porter-Cologne Water Quality Control Act, Water Code, Sections 13000 *et seq.*
    e. Health and Safety Code, Sections 25915-25924
    f. California Labor Code Chapter 6, including, without limitation, Sections 6382, 6501.5-6501.9, 6503.5, 9021.5, 9080
    g. Business and Professions Code, including without limitation, Sections 7058.5, 7065.01, 7118.5
    h. Underground Storage of Hazardous Substance Act, Health and Safety Code, Sections 25280 *et seq.*
    i. Petroleum Underground Storage Tank Cleanup, Health and Safety Code, Sections 25299.10 *et seq.*
    j. Safe Drinking Water and Toxic Enforcement Act of 1986, Health & Safety Code, Sections 25249.5 *et seq.* (Proposition 65)
    k. Above Ground Petroleum Storage Act, Health and Safety Code, Sections 25270 *et seq.*
    l. Hazardous Materials Release Response Plans and Inventory, Health and Safety Code, Chapter 6.95
2. Administrative Code and Regulations:
    a. Title 22 CCR Division 4.5, Environmental Health Standards for the Management of Hazardous Waste, Sections 6600 *et seq.*
    b. Cal/OSHA Worker Protection Standards, Title 8 CCR, Sections 1529, 5208
    c. Title 8 CCR, Section 1532.1, Lead in Construction
    d. Title 23 CCR, Sections 2610 *et seq.*
3. Local State Agency Requirements:
    a. Bay Area Air Quality Management District, Fugitive Dust Rules
    b. Bay Area Air Quality Management District Regulation 11-2-303
    c. State Water Resource Control Board, General Construction Activity Stormwater Permit Requirements (Order 92-O8 DWQ)
    d. Local Agency Requirements:
        1) Schell-Vista Fire Protection District

PART 2 PRODUCTS – NOT USED

PART 3 EXECUTION – NOT USED

END OF SECTION

SECTION 01415

REGULATORY REQUIREMENTS - FUNDING

PART 1 GENERAL

1.1 SUMMARY

A. Section Includes:
   1. Regulatory requirements applicable to Contract Documents.

B. This Section 01415 supplements Section 01410 (Regulatory Requirements) and the Work-specific listings of applicable regulatory requirements elsewhere in the Specifications.

1.2 LAWS, ORDINANCES, RULES, AND REGULATIONS

A. During prosecution of Work under Contract Documents, Contractor shall comply with applicable laws, ordinances, rules and regulations including, but not limited to, those listed below:
   1. United States Department of the Interior, Bureau of Reclamation

B. Contractor shall, at all times, comply with all applicable federal and state laws, rules, regulations, permits, and all applicable local ordinances, specifically including, but not limited to, environmental, procurement, and safety laws, rules, regulations, permits, and ordinances. Contractor shall also be responsible for compliance with the federal and state requirements set forth in this Section 01415.

1.3 FUNDING

A. The Project is funded in whole or part under:
   1. United States Department of the Interior, Bureau of Reclamation, Title XVI (Title XVI).
   2. United States Department of the Interior, Bureau of Reclamation, American Recovery and Reinvestment Act of 2009 (ARRA).

1.4 FUNDING REQUIREMENTS – BUREAU OF RECLAMATION TITLE XVI

A. A copy of the Title XVI funding requirements is included at the end of this Section 01415 as Attachment A.

B. Definition of terms used in the Title XVI funding requirements:
   1. Agency: Bureau of Reclamation
   2. Applicant: Owner
   3. Grantee: Sonoma County Water Agency
   4. Subgrantee: Members of the North Bay Water Reuse Authority (Sonoma Valley County Sanitation District, Napa Sanitation District, Novato Sanitary District, and Las Gallinas Sanitary District)
   5. Recipient: Sonoma County Water Agency
   6. Subrecipient: Members of the North Bay Water Reuse Authority (Sonoma Valley County Sanitation District, Napa Sanitation District, Novato Sanitary District, and Las Gallinas Valley Sanitary District)
   7. Additional definitions as defined in the funding requirements, Paragraph 1.(a).

C. Funding Documents Included in Other Portions of Contract Documents:
   1. For Contractor's convenience, the following forms have been included in the Bidding Requirements:

a. Document 00457 (Prime Contractor/Recipient Selected Disadvantaged Business Enterprises [DBE])
b. Document 00458 (Disadvantaged Business Enterprise Program DBE Subcontractor Utilization Form)

1.5 FUNDING REQUIREMENTS – ARRA

A. A copy of the ARRA funding requirements is included at the end of this Section 01415 as Attachment B.
B. Definition of terms used in the ARRA funding requirements:
   1. Agency: Bureau of Reclamation
   2. Applicant: Owner
   3. Grantee: Sonoma County Water Agency
   4. Subgrantee: Members of the North Bay Water Reuse Authority (Sonoma Valley County Sanitation District, Napa Sanitation District, Novato Sanitary District, and Las Gallinas Sanitary District)
   5. Recipient: Sonoma County Water Agency
   6. Subrecipient: Members of the North Bay Water Reuse Authority (Sonoma Valley County Sanitation District, Napa Sanitation District, Novato Sanitary District, and Las Gallinas Valley Sanitary District)
C. Funding Documents Included in Other Portions of Contract Documents:
   1. For Contractor's convenience, the following forms have been included in the Bidding Requirements:
      a. Document 00457 (Prime Contractor/Recipient Selected Disadvantaged Business Enterprises [DBE])
      b. Document 00458 (Disadvantaged Business Enterprise Program DBE Subcontractor Utilization Form)
D. Federal Wage Decision:
   1. A copy of the Federal Wage Decision is included in Attachment B and was the most current Federal Wage Decision available at the time the Project Manual was assembled. The Federal Wage Decision is updated periodically by the U.S. Department of Labor. If there is a discrepancy or difference between the state prevailing wage rate and the federal minimum wage rate, Contractor shall pay not less than the higher wage rate.

PART 2 PRODUCTS – NOT USED

PART 3 EXECUTION – NOT USED

END OF SECTION

ATTACHMENT A

United States Department of the Interior, Bureau of Reclamation
Title XVI (Title XVI)

7-2279 (05-22-09)
Bureau of Reclamation

UNITED STATES DEPARTMENT OF THE INTERIOR
BUREAU OF RECLAMATION
ASSISTANCE AGREEMENT

Page 1 of 37

1A. AGREEMENT NUMBER	1B. MOD NUMBER	2. TYPE OF AGREEMENT	3. CLASS OF RECIPIENT
R10AC20093		[ ] GRANT [X] COOPERATIVE AGREEMENT	Special District

4. ISSUING OFFICE (NAME, ADDRESS)
U.S. Department of the Interior
Bureau of Reclamation
Mid-Pacific Region
2800 Cottage Way, Room E-1815v
Sacramento, California 95825-1898

DUNS: 098-86-5801/EIN: 84-1024566

5. RECIPIENT (NAME, ADDRESS, TELEPHONE)
Sonoma County Water Agency
404 Aviation Blvd.
Santa Rosa, California 95403

Phone: (707) 547-1911

EIN #	94-6000539	County:	Sonoma
DUNS #:	074-66-2503	Congress. Dist:	01, 06

6. ADMINISTRATIVE POINT OF CONTACT (NAME, ADDRESS, TELEPHONE, E-MAIL)
Ms. Maria E. Castaneda, MP-3813 Ph: 916 978-5148
U.S. Department of the Interior
Bureau of Reclamation
Mid-Pacific Region
2800 Cottage Way, Room E-1815
Sacramento, California 95825-1898
Email: mcastaneda@usbr.gov

7. RECIPIENT PROJECT MANAGER (NAME, ADDRESS, TELEPHONE, E-MAIL)
Mr. Grant Davis
Sonoma County Water Agency
404 Aviation Blvd.
Santa Rosa, California 95403

Phone: (707) 547-1911 Fax: (707) 524-3782
Email: grant.davis@scwa.ca.gov

8. GRANTS OFFICER TECHNICAL REPRESENTATIVE (NAME, ADDRESS, TELEPHONE, E-MAIL)
Mr. David White, MP 720 Ph: 916 978-5074
U.S. Department of the Interior
Bureau of Reclamation
Mid-Pacific Region
2800 Cottage Way, Room E-1815
Sacramento, California 95825-1898
Email: dwhite@usbr.gov

9A. INITIAL AGREEMENT EFFECTIVE DATE:
See block 17a

9B. MODIFICATION EFFECTIVE DATE:

10. COMPLETION DATE
September 30, 2018

11. PROGRAM STATUTORY AUTHORITY
Reclamation Wastewater and Groundwater Study and Facilities Act (Public Law 102-575, Title XVI; 43 USC 390h et seq)

CFDA 15.504

12. FUNDING INFORMATION	RECIPIENT/OTHER	RECLAMATION
Total Estimated Amount of Agreement	$53,016,000.00	$17,672,000.00
This Obligation		$ 190,000.00
Previous Obligation		
Total Obligation	$53,016,000.00	$ 190,000.00
Cost-Share %	75%	25%

13. REQUISITION NUMBER
10203000085

14A. ACCOUNTING AND APPROPRIATION DATA
A10 1993 1000 000 00 0 0 2030000 411C

14B. TREASURY ACCOUNT FUNDING SYMBOL
14X0680

15. PROJECT TITLE AND BRIEF SUMMARY OF PURPOSE AND OBJECTIVES OF PROJECT
Title: North San Pablo Bay Restoration and Reuse Project
Project Description: The proposed Project would build on commitments to long-term inter-agency cooperation to address common needs related to reliable water supplies and enhanced environmental restoration.

16a. Acceptance of this Assistance Agreement in accordance with the terms and conditions contained herein is hereby made on behalf of the above-named recipient
BY:
DATE: 9-26-10

17a. Award of this Assistance Agreement in accordance with the terms and conditions contained herein is hereby made on behalf of the United States of America, Bureau of Reclamation
BY: Maria Castaneda
DATE: 9/27/2010

16b. NAME, TITLE, AND TELEPHONE NUMBER OF SIGNER

☐ Additional signatures are attached

17b. NAME OF GRANTS OFFICER
Maria E. Castaneda

DOCUMENTS INCORPORATED HEREIN BY REFERENCE:

TABLE OF CONTENTS

I. OVERVIEW AND SCHEDULE 3
1. AUTHORITY 3
2. PUBLIC PURPOSE 4
3. BACKGROUND AND OBJECTIVES 4
4. PERIOD OF PERFORMANCE AND FUNDS AVAILABILITY 5
5. SCOPE OF WORK 6
6. RESPONSIBILITY OF THE PARTIES 7
7. BUDGET 7
8. KEY PERSONNEL 10
9. REPORTING REQUIREMENTS AND DISTRIBUTION 12
10. REGULATORY COMPLIANCE 14
II. RECLAMATION STANDARD TERMS AND CONDITIONS - STATES, LOCAL GOVERNMENTS, AND FEDERALLY RECOGNIZED INDIAN TRIBAL GOVERNMENTS 16
1. REGULATIONS 16
2. PAYMENT 17
3. PROCUREMENT STANDARDS (43 CFR §12.76) 19
4. EQUIPMENT (43 CFR §12.72) 28
5. SUPPLIES (43 CFR §12.73) 30
6. INSPECTION 31
7. AUDIT (31 U.S.C. 7501-7507) 31
8. ENFORCEMENT (43 CFR §12.83) 31
9. TERMINATION FOR CONVENIENCE (43 CFR §12.84) 32
10. DEBARMENT AND SUSPENSION (2 CFR §1400) 32
11. DRUG-FREE WORKPLACE (43 CFR §43) 33
12. ASSURANCES AND CERTIFICATIONS INCORPORATED BY REFERENCE 33
13. COVENANT AGAINST CONTINGENT FEES 33
14. TRAFFICKING VICTIMS PROTECTION ACT OF 2000 (2 CFR §175.15) 34
15. NEW RESTRICTIONS ON LOBBYING (43 CFR §18) 36

Cooperative Agreement
Between
Bureau of Reclamation
And
Sonoma County Water Agency
For
North Bay Water Reuse Program

I. OVERVIEW AND SCHEDULE

1. AUTHORITY

This Grant Agreement (Agreement) is entered into between the United States of America, acting through the Department of Interior, Bureau of Reclamation, hereinafter referred to as "Reclamation", and **Sonoma County Water Agency** , hereinafter referred to as the "Recipient" or "Grantee", pursuant to ***The Reclamation Wastewater and Groundwater Study and Facilities Act (Public Law 102-575, Title XVI; 43 USC 390h et seq) is amended by Public Law 111-11, Title IX, Section 9110(a) as follows:***

SECTION 1651- NORTH BAY WATER REUSE PROGRAM (43 USC 390h-34)

(a) DEFINITIONS - In this section:
(1) ELIGIBLE ENTITY.—The term 'eligible entity' means a member agency of the ***North Bay Water Reuse Authority*** *of the State located in the* ***North San Pablo Bay*** *watershed in - (A) Marin County; (B) Napa County; (C) Solano County; or (D)* ***Sonoma County****.*
(2) WATER RECLAMATION AND REUSE PROJECT - The term 'water reclamation and reuse project' means a project carried out by the Secretary and an eligible entity in the North San Pablo Bay watershed relating to—
(A) water quality improvement; (B) wastewater treatment; (C) water reclamation and reuse; (D) groundwater recharge and protection; (E) surface water augmentation; or (F) other related improvements.
(3) STATE - The term 'State' means the State of California.
(b) NORTH BAY WATER REUSE PROGRAM -
(1) IN GENERAL.—Contingent upon a finding of feasibility, the Secretary, acting through a cooperative agreement with the State or a subdivision of the State, is authorized to enter into cooperative agreements with eligible entities for the planning, design, and construction of water reclamation and reuse facilities and recycled water conveyance and distribution systems.
(2) COORDINATION WITH OTHER FEDERAL AGENCIES - In carrying out this section, the Secretary and the eligible entity shall, to the maximum extent practicable, use the design work and environmental evaluations initiated by -
(A) non-Federal entities; and ''(B) the Corps of Engineers in the San Pablo Bay Watershed of the State.
(3) PHASED PROJECT - A cooperative agreement described in paragraph (1) shall require that the North Bay Water Reuse Program carried out under this section shall consist of 2 phases as follows:
(A) FIRST PHASE - During the first phase, the Secretary and an eligible entity shall complete the planning, design, and construction of the main treatment and main conveyance systems. ''(B) SECOND PHASE - During the second phase, the Secretary and an eligible entity shall complete the planning, design, and construction of the sub-regional distribution systems.

(4) COST SHARING - (A) FEDERAL SHARE - The Federal share of the cost of the first phase of the project authorized by this section shall not exceed 25 percent of the total cost of the first phase of the project.
(B) FORM OF NON-FEDERAL SHARE - The non-Federal share may be in the form of any in-kind services that the Secretary determines would contribute substantially toward the completion of the water reclamation and reuse project, including - (i) reasonable costs incurred by the eligible entity relating to the planning, design, and construction of the water reclamation and reuse project; and (ii) the acquisition costs of land acquired for the project that is - (I) used for planning, design, and construction of the water reclamation and reuse project facilities; and (II) owned by an eligible entity and directly related to the project.
(C) LIMITATION - The Secretary shall not provide funds for the operation and maintenance of the project authorized by this section.
(5) EFFECT.—Nothing in this section - (A) affects or preempts - (i) State water law; or (ii) an interstate compact relating to the allocation of water; or (B) confers on any non-Federal entity the ability to exercise any Federal right to - (i) the water of a stream; or (ii) any groundwater resource.
(6) AUTHORIZATION OF APPROPRIATIONS - There is authorized to be appropriated for the Federal share of the total cost of the first phase of the project authorized by this section $25,000,000, to remain available until expended.

2. PUBLIC PURPOSE

The Project will diversify the types of water available to the North Bay area, for by using non-potable water for non-potable uses, potable water is made available for potable-only uses.

3. BACKGROUND AND OBJECTIVES

The objective of this cooperative agreement will be to reimburse Recipient for the appropriate Federal cost share associated with the Project, which, when combined with their ARRA-funded agreement, will be the lesser of 25% of the total project cost or $25,000,000. Based on documents submitted to Reclamation, the total project cost for the non-ARRA agreement is $70,688,000 and the associated Federal Cost Share is $17,672,000.

Recipient administers the Project on behalf of the North Bay Water Reuse Authority (NBWRA), which is comprised of multiple members. Recipient submitted documents that represent the totality of the Project while showing the costs for each member agency's specific project. The Project consists in the planning, design, and construction of multi-county activities that will provide recycled water for agricultural, ban, and environmental uses and to expand the recycled water system region-wide. The Project will include upgrades of treatment processes and construction of storage, pipelines, and pump station facilities to distribute recycled water for use in compliance with Article 4 in Title 22 of the California Code of Regulations. The Project will also reduce reliance on local and imported surface water and groundwater supplies and reduce the amount treated effluent releases to San Pablo Bay and its tributaries. NBWRA Member Agencies collectively prioritized the projects within their individual service areas to establish an Implementation Plan identifying the order in which projects will be constructed. Phase 1

projects are defined to a level of detail that allows project-level environmental review. These projects are collectively referred to as Phase 1 Projects. The Phase 1 Projects will include approximately 46.3 miles of new pipeline, will annually recycle approximately 3,943 acre-feet (AF), will increase the regional system capacity of 7.4 mgd, will include 1,978 horse-power (HP) new pumps, will create an additional 65 AF of storage, will rehabilitate an existing reservoir; and will construct multiple new water service connections and rehabilitate multiple existing water service connections.

As required by Reclamation Manual Directive and Standard WTR 11-01, SCWA conducted a Feasibility Study and detailed the study and its findings in a Feasibility Report. Upon review of the Feasibility Report, Reclamation gave the Project a positive determination of feasibility; subsequent to that, Congress authorized the Project for construction through Section 9110 of Public Law 111-11, "North Bay Water Reuse Authority", which amends Title XVI, the Wastewater and Groundwater Study and Facilities Act of 1992, of Public Law 102-575 to add Section 1651, "North Bay Water Reuse Program".

Details of the Project may be found in the Feasibility Report. The Project's objectives were rigorously reviewed by Reclamation and are clearly defined and feasible. Furthermore, in a separate analysis, Reclamation will determine that the Project complies with all applicable Federal environmental and cultural resources rules and regulations.

4. PERIOD OF PERFORMANCE AND FUNDS AVAILABILITY

This Agreement becomes effective on the date shown in Block 17a of Form 7-2279, United States of America, Department of the Interior, Bureau of Reclamation, Assistance Agreement. The Agreement shall remain in effect until the date shown in Block 10 of Form 7-2279, United States of America, Department of the Interior, Bureau of Reclamation, Assistance Agreement. The period of performance for this Agreement may only be modified through written modification of the Agreement by a Reclamation Grants Officer (GO).

Funds for payment under this Agreement are included in ***Public Law 111-85 – Energy and Water Development and Related Agencies Appropriation Act, 2010***. Funding for any optional year of the Agreement is contingent upon subsequent Congressional funding.

Reclamation has **$216,000.00** funding available ($26,000.00 set aside for post award monitoring and oversight) for this Agreement. The Government's obligation under this Agreement is contingent upon the availability of app ropriated funds from which payment for Agreement purposes can be made. No legal liability on the part of the Government for any payment may arise until funds are made available to the GO for this Agreement, and until the Recipient receives notice of such availability through formal modification of this Agreement by the GO.

It is recognized and agreed that all costs incurred by Reclamation related to the development and administration of this Agreement and all costs associated with carrying out Reclamation's responsibilities as provided in Section 1.6.2 of this agreement, are considered part of the total costs of the Project, and therefore the Recipient is responsible for 75 percent of these costs.

These costs include, but are not limited to, salary, overhead, travel, and other costs directly or indirectly related to the Agreement, as determined by Reclamation. Following the completion of each quarter of the federal fiscal year, Reclamation shall provide the Recipient with a statement of Reclamation's costs for the previous quarter. The Recipient may request explanations or a review of the costs included in the statement; however, Reclamation's determination as to the validity of the costs is final. The Recipient's 75 percent share of Reclamation's costs will be deducted from payments processed by Reclamation under this Agreement for the previous quarter

5. SCOPE OF WORK

The Scope of Work for this non-ARRA funded project is to:

Novato South Service Area – Hamilton Field:
Complete planning and other pre-construction activities, environmental review, engineering design, and permitting.
Complete construction activities, to upgrade WWTP to tertiary level of treatment or expand existing tertiary plant.
Complete Phase 2 construction activities for recycled water distribution and storage system to serve the remaining Hamilton Field area, including approximately 2.5 miles of additional pipelines (when combined, Phase's 1 and 2 result in a total finished conveyance system length of approximately 5.9 miles).

Novato North Service Area/Novato Central Service Area:

- *Under the Recycled Water System Expansion Project, Novato SD and NMWD would complete planning and other pre-construction activities, environmental review, engineering design, and permitting.*
- *Implement a reuse project in the Novato Central Service Area through construction of a recycled water distribution system from the Novato SD RWF at Davidson WWTP south to Rowland Boulevard and the Vintage Oaks shopping center, and across Highway 101 to serve urban users west of Highway 101. From the RWF at Davidson WWTP, an 18-inch pipeline would be installed along Novato SD's existing easement, with a jack and bore crossing of US 101 from Rowland Boulevard to Redwood Boulevard. An 18-inch recycled trunk line would then extend north through Novato to deliver recycled water to Novato High School and other irrigated playing fields, with a 10-inch line extending south along Redwood Boulevard.*
- *As applicable, the treatment facilities at the Recycled Water Treatment Facility would be decommissioned and relocated to the Novato SD WWTP. A new pipeline would connect the WWTP with the North Service Area pipeline in Olive Drive via Lea Drive or McClelland Drive.*

Napa-Sonoma Salt Marsh Pipeline:

- *Complete planning and other pre-construction activities, environmental review, engineering design, and permitting.*
- *Initiate construction for distribution pipeline from the Sonoma Valley County Sanitation District wastewater treatment plant north.*

- *Construction of pumping improvements at the wastewater treatment plant, and construction of approximately 7.5 miles of 18- to 24-inch pipe between the District wastewater treatment plant and the salt ponds.*

Miliken-Sarco-Tulocay Area Project:

- *Complete planning environmental review, and design activities, including surveying, right-of-way work, preliminary and final designs and permitting for remainder of project.*
- *Complete procuring materials and begin pipeline installation for remainder of project.*
- *Complete bid/award phase for remainder of project.*
- *Complete pipeline installation, new pump station construction, and existing pump station and filtration improvements for the remainder of the project.*

6. RESPONSIBILITY OF THE PARTIES

6.1 Recipient Responsibilities

6.1.1 The Recipient shall be responsible for carrying out the Scope of Work as provided in Section 5. The Recipient shall adhere to Federal, state, and local laws, regulations, and codes, as applicable, and shall obtain all required approvals and permits. If applicable, the Recipient shall also coordinate and obtain approvals from site owners and operators.

6.2 Reclamation Responsibilities

6.2.1 Reclamation will provide scientific or administrative advice on the development of the project. Such advice will take into consideration factors such as: (1) the scientific complexities of the project; (2) the Recipient's progress in meeting project goals; and (3) the Recipient's ability to meet the proposed time schedule.

6.2.2 Reclamation will also monitor the performance progress of the Recipient, review reporting requirements, ensure that project is completed and all reports are submitted and acceptable.

6.2.3 Reclamation will confirm project compliance with the National Environmental Policy Act and endangered Species Act. However, it is the ultimate responsibility of the Recipient for obtaining all applicable Federal, State, and local permits for work to be performed under this Agreement.

7. BUDGET

7.1 Approved Budget

Project Phase	Non-Federal Cost Share	Federal Cost Share	Total Phase Cost
Program Oversight and Administration	$750,000	$250,000	$1,000,000
Novato South Service Area—Hamilton Field	$3,192,798	$1,064,266	$4,257,064
Novato Central Service Area and Novato North Service Area	$6,933,617	$2,311,206	$9,244,823
Sonoma Valley Project and Napa-Sonoma Salt Marsh Pipeline	$18,635,561	$6,211,854	$24,847,414

Miliken-Sarco-Tulocay Area Project	$23,504,023	$7,834,674	$31,338,698
Total	$53,015,999	$17,672,000	$70,687,999

7.2 Cost Sharing Requirement

The Recipient will provide cost-share for this project equal to but not less than 75%.

7.3 Pre-Award Incurrence of Costs

The Recipient shall be entitled to have incurred costs for this Agreement for allowable costs incurred on or after **May 1, 2009**, which if had been incurred after this Agreement was entered into, would have been allowable, allocable, and reasonable under the terms and conditions of this Agreement.

7.4 Allowable Costs (2 CFR Part §225)

Costs incurred for the performance of this Agreement must be allowable, allocable to the project, and reasonable. The following Office of Management and Budget (OMB) Circular, codified within the Code of Federal Regulations (CFR), governs the allowability of costs for Federal financial assistance:

2 CFR Part 225 (OMB Circular A-87), "Cost Principles for State, Local, and Indian Tribal Governments"

Expenditures for the performance of this Agreement must conform to the requirements within this Circular. The Recipient must maintain sufficient documentation to support these expenditures. Questions on the allowability of costs should be directed to the GO responsible for this Agreement.

The Recipient shall not incur costs or obligate funds for any purpose pertaining to operation of the program or activities beyond the expiration date stated in the Agreement. The only costs which are authorized for a period of up to 90 days following the project performance period are those strictly associated with closeout activities for preparation of the final report.

7.5 Changes (43 CFR §12.70).

(a) *General.* Grantees and sub-grantees are permitted to re-budget within the approved direct cost budget to meet unanticipated requirements and may make limited program changes to the approved project. However, unless waived by the awarding agency, certain types of post-award changes in budgets and projects shall require the prior written approval of the awarding agency.

(b) *Relation to cost principles.* The applicable cost principles (see 43 §12.62) contain requirements for prior approval of certain types of costs. Except where waived, those requirements apply to all grants and sub-grants even if paragraphs (c) through (f) of this section do not.

(c) *Budget changes.*

(1) *Non-construction projects.* Except as stated in other regulations or an award document, grantees or sub-grantees shall obtain the prior approval of the awarding agency whenever any of the following changes is anticipated under a non-construction award:

(i) Any revision which would result in the need for additional funding.

(ii) Unless waived by the awarding agency, cumulative transfers among direct cost categories, or, if applicable, among separately budgeted programs, projects, functions, or activities which exceed or are expected to exceed ten percent of the current total approved budget, whenever the awarding agency's share exceeds $100,000.

(iii) Transfer of funds allotted for training allowances (i.e., from direct payments to trainees to other expense categories).

(2) *Construction projects.* Grantees and sub-grantees shall obtain prior written approval for any budget revision which would result in the need for additional funds.

(3) *Combined construction and non-construction projects.* When a grant or sub-grant provides funding for both construction and non-construction activities, the grantee or sub-grantee must obtain prior written approval from the awarding agency before making any fund or budget transfer from non-construction to construction or vice versa.

(d) *Programmatic changes.* Grantees or sub-grantees must obtain the prior approval of the awarding agency whenever any of the following actions is anticipated:

(1) Any revision of the scope or objectives of the project (regardless of whether there is an associated budget revision requiring prior approval).

(2) Need to extend the period of availability of funds.

(3) Changes in key persons in cases where specified in an application or a grant award. In research projects, a change in the project director or principal investigator shall always require approval unless waived by the awarding agency.

(4) Under non-construction projects, contracting out, sub-granting (if authorized by law) or otherwise obtaining the services of a third party to perform activities which are central to the purposes of the award, *unless included in the initial funding proposal.* This approval requirement is in addition to the approval requirements of 43 §12.76 but does not apply to the procurement of equipment, supplies, and general support services.

(e) *Additional prior approval requirements.* The awarding agency may not require prior approval for any budget revision which is not described in paragraph (c) of this section.

(f) *Requesting prior approval.*

(1) A request for prior approval of any budget revision will be in the same budget formal the grantee used in its application and shall be accompanied by a narrative justification for the proposed revision.

(2) A request for a prior approval under the applicable Federal cost principles (see §12.62) may be made by letter.

(3) A request by a sub-grantee for prior approval will be addressed in writing to the grantee. The grantee will promptly review such request and shall approve or disapprove the request in writing. A grantee will not approve any budget or project revision which is inconsistent with the purpose or terms and conditions of the Federal grant to the grantee. If the revision, requested by the sub-grantee would result in a change to the grantee's approved project which requires Federal prior approval, the grantee will obtain the Federal agency's approval before approving the sub-grantee's request.

7.6 Modifications

Any changes to this Agreement shall be made by means of a written modification. Reclamation may make changes to the Agreement by means of a unilateral modification to address administrative matters, such as changes in address, no-cost time extensions, the addition of previously agreed upon funding, or de-obligation of excess funds at the end of the Agreement. Additionally, a unilateral modification may be utilized by Reclamation if it should become necessary to suspend or terminate the Agreement in accordance with 43 CFR 12.83.

All other changes shall be made by means of a bilateral modification to the Agreement. No oral statement made by any person, or written statement by any person other than the GO, shall be allowed in any manner or degree to modify or otherwise effect the terms of the Agreement.

All requests for modification of the Agreement shall be made in writing, provide a full description of the reason for the request, and be sent to the attention of the GO. Any request for project extension shall be made at least 45 days prior to the expiration date of the Agreement or the expiration date of any extension period that may have been previously granted. Any determination to extend the period of performance or to provide follow-on funding for continuation of a project is solely at the discretion of Reclamation.

8. KEY PERSONNEL

8.1 Recipient's Key Personnel

The Recipient's Project Manager for this Agreement shall be:

Sonoma County Water Agency
Attn: Mr. Grant Davis
404 Aviation Blvd.
Santa Rosa, California 95403
Ph: (707) 547-1911
Fax: (707) 524-3782
Email: grant.davis@scwa.ca.gov

Changes to Key Personnel require compliance with 43 CFR 12.70(d)(3).

8.2 Reclamation's Key Personnel

8.2.1 Grants Officer (GO):

Bureau of Reclamation
Attn: Ms. Maria E. Castaneda
2800 Cottage Way
Sacramento, CA 95825
Ph: (916) 978-5148
Fax: (916) 978-5175
Email: mcastaneda@usbr.gov

The GO is the only official with legal delegated authority to represent Reclamation. The GO's responsibilities include, but are not limited to, the following:

a) Formally obligate Reclamation to expend funds or change the funding level of the Agreement;

b) Approve through formal modification changes in the scope of work and/or budget;

c) Approve through formal modification any increase or decrease in the period of performance of the Agreement;

d) Approve through formal modification changes in any of the expressed terms, conditions, or specifications of the Agreement;

e) Be responsible for the overall administration, management, and other non-programmatic aspects of the Agreement including, but not limited to, interpretation of financial assistance statutes, regulations, circulars, policies, and terms of the Agreement;

f) Where applicable, ensures that Reclamation complies with the administrative requirements required by statutes, regulations, circulars, policies, and terms of the Agreement.

8.2.2 Grants Officer Technical Representative (GOTR):

Bureau of Reclamation
Attn: Mr. David White
2800 Cottage Way
Sacramento, CA 95825
Ph: (916) 978-5074
E-mail: dwhite@usbr.gov

The GOTR's authority is limited to technical and programmatic aspects of the Agreement. The GOTR's responsibilities include, but are not limited to, the following:

a) Assist the Recipient, as necessary, in interpreting and carrying out the scope of work in the Agreement;

b) Review, and where required, approve Recipient reports and submittals as required by the Agreement;

c) Where applicable, monitor the Recipient to ensure compliance with the technical requirements of the Agreement;

d) Where applicable, ensure that Reclamation complies with the technical requirements of the Agreement;

The GOTR does not have the authority to and may not issue any technical assistance which:

a) Constitutes an assignment of additional work outside the scope of work of the Agreement;

b) In any manner causes an increase or decrease in the total estimated cost or the time required for performance; or

c) Changes any of the expressed terms, conditions, or specifications of the Agreement.

9. REPORTING REQUIREMENTS AND DISTRIBUTION

9.1 Non-compliance. Failure to comply with the reporting requirements contained in this Agreement may be considered a material non-compliance with the terms and conditions of the award. Non compliance may result in withholding of payments pending receipt of required reports, denying both the use of funds and matching credit for all or part of the cost of the activity or action not in compliance, whole or partial suspension or termination of the Agreement, recovery of funds paid under the Agreement, withholding of future awards, or other legal remedies in accordance with 43 CFR §12.83.

9.2 Financial Reports. Financial Status Reports shall be submitted by means of the SF-425 and shall be submitted according to the Report Frequency and Distribution schedule below. All financial reports shall be signed by an Authorized Certifying Official for the Recipient's organization.

9.3 Monitoring and reporting program performance (43 CFR §12.80)

(a) *Monitoring by grantees.* Grantees are responsible for managing the day-to-day operations of grant and sub-grant supported activities. Grantees must monitor grant and sub-grant supported activities to assure compliance with applicable Federal requirements and that performance goals are being achieved. Grantee monitoring must cover each program, function or activity.

(b) *Non-construction performance reports.* The Federal agency may, if it decides that performance information available from subsequent applications contains sufficient information to meet its programmatic needs, require the grantee to submit a performance report only upon

expiration or termination of grant support. Unless waived by the Federal agency, this report will be due on the same date as the final Financial Status Report.

(1) Grantees shall submit annual performance reports unless the awarding agency requires quarterly or semi-annual reports. However, performance reports will not be required more frequently than quarterly. Annual reports shall be due 90 days after the grant year, quarterly or semi-annual reports shall be due 30 days after the reporting period. The final performance report will be due 90 days after the expiration or termination of grant support. If a justified request is submitted by a grantee, the Federal agency may extend the due date for any performance report. Additionally, requirements for unnecessary performance reports may be waived by the Federal agency.

(2) Performance reports will contain, for each grant, brief information on the following:

(i) A comparison of actual accomplishments to the objectives established for the period. Where the output of the project can be quantified, a computation of the cost per unit of output may be required if that information will be useful.

(ii) The reasons for slippage if established objectives were not met.

(iii) Additional pertinent information including, when appropriate, analysis and explanation of cost overruns or high unit costs.

(3) Grantees will not be required to submit more than the original and two copies of performance reports.

(4) Grantees will adhere to the standards in this section in prescribing performance reporting requirements for sub-grantees.

(c) *Construction performance reports.* For the most part, on-site technical inspections and certified percentage-of-completion data are relied on heavily by Federal agencies to monitor progress under construction grants and sub-grants. The Federal agency will require additional formal performance reports only when considered necessary, and never more frequently than quarterly.

(d) *Significant developments.* Events may occur between the scheduled performance-reporting dates which have significant impact upon the grant or sub-grant supported activity. In such cases, the grantee must inform the Federal agency as soon as the following types of conditions become known:

(1) Problems, delays, or adverse conditions which will materially impair the ability to meet the objective of the award. This disclosure must include a statement of the action taken, or contemplated, and any assistance needed to resolve the situation.

(2) Favorable developments which enable meeting time schedules and objectives sooner or at less cost than anticipated or producing more beneficial results than originally planned.

(e) Federal agencies may make site visits as warranted by program needs.

(f) *Waivers, extensions.*

(1) Federal agencies may waive any performance report required by this part if not needed.

(2) The grantee may waive any performance report from a sub-grantee when not needed. The grantee may extend the due date for any performance report from a sub-grantee if the grantee will still be able to meet its performance reporting obligations to the Federal agency.

9.4 Report Frequency and Distribution. The following table sets forth the reporting requirements for this Agreement.

REQUIRED REPORTS	Interim Reports	Final Report
Program Performance Report		
Format	No specific format required. See content requirements within Section 9.3 (43 CFR 12.80) above.	No specific format required. See content requirements within Section 9.3 (43 CFR 12.80) above.
Reporting Frequency	**Semi-Annual**	Final Report due upon completion of Agreement's period of performance
Reporting Period	October 1 through March 31 and April 1 through September 30	Entire period of performance
Due Date	Within 30 days after the end of the Reporting Period	Within 90 days after the completion date of the Agreement
Submit to:	GO and GOTR	GO and GOTR
Financial Status Report		
Format	SF-425	SF-425
Reporting Frequency	Semi-Annual	Final Report due upon completion of Agreement's period of performance
Reporting Period	October 1 through March 31 and April 1 through September 30	Entire period of performance
Due Date	Within 30 days after the end of the Reporting Period	Within 90 days after the completion date of the Agreement
Submit to:	GO and GOTR	GO and GOTR

10. REGULATORY COMPLIANCE

The Recipient agrees to comply with or assist Reclamation in compliance with all regulatory compliance requirements and all applicable state, Federal, and local environmental and cultural and paleontological resource protection laws and regulations as applicable to this project. These may include, but are not limited to, the National Environmental Policy Act (NEPA) including the Council on Environmental Quality and Department of the Interior regulations implementing

NEPA, the Clean Water Act, the Endangered Species Act, consultation with potentially affected Tribes, and consultation with the State Historic Preservation Office.

Certain environmental and other associated compliance are Federal responsibilities, and will occur as appropriate Reclamation will identify the need for, and complete any environmental compliance requirements, as identified above, pertinent to Reclamation, pursuant to activities specific to this assisted activity. Environmental and other associated compliance shall be completed prior to the start of this project. As such, notwithstanding any other provision of this Agreement, Reclamation shall not provide any funds to the recipient for Agreement purposes, and the Recipient shall not begin implementation of the assisted activity described in this Agreement, unless and until Reclamation provides written notice to the recipient that all applicable environmental and regulatory compliance analyses and clearances have been completed, and the Recipient may begin implementation of the assisted activity.

II. RECLAMATION STANDARD TERMS AND CONDITIONS - STATES, LOCAL GOVERNMENTS, AND FEDERALLY RECOGNIZED INDIAN TRIBAL GOVERNMENTS

1. REGULATIONS

The regulations at 43 CFR, Part 12, Subparts A, C, E, and F, are hereby incorporated by reference as though set forth in full text. The following Office of Management and Budget (OMB) Circulars, as applicable, and as implemented by 43 CFR Part 12, are also incorporated by reference and made a part of this Agreement. Failure of a Recipient to comply with any applicable regulation or circular may be the basis for withholding payments for proper charges made by the Recipient and/or for termination of support.

1.1 Colleges and Universities that are Recipients or sub-recipients shall use the following:

2 CFR Parts 215 and 220 (Circular A 21), "Cost Principles for Educational Institutions"

Circular A 110, as amended September 30, 1999, "Uniform Administrative Requirements for Grants and Agreements with Institutions of Higher Education, Hospitals, and Other Non-Profit Organizations" (Codification by Department of Interior, 43 CFR 12, Subpart F)

Circular A-133, revised June 27, 2003, "Audits of States, Local Governments, and Non-Profit Organizations"

1.2 State, Local and Tribal Governments that are Recipients or sub-recipients shall use the following:

2 CFR Part 225 (Circular A 87), "Cost Principles for State, Local, and Indian Tribal Governments"

Circular A 102, as amended August 29, 1997, "Grants and Cooperative Agreements with State and Local Governments" (Grants Management Common Rule, Codification by Department of Interior, 43 CFR 12, Subpart C)

Circular A-133, revised June 27, 2003, Audits of States, Local Governments, and Non-Profit Organizations"

1.3 Non-profit Organizations that are Recipients or sub-recipients shall use the following:

2 CFR Part 230 (Circular A 122), "Cost Principles for Non-Profit Organizations"

Circular A 110, as amended September 30, 1999, "Uniform Administrative Requirements for Grants and Agreements With Institutions of Higher Education, Hospitals, and Other Non-Profit Organizations" (Codification by Department of Interior, 43 CFR 12, Subpart F)

Circular A-133, revised June 27, 2003, "Audits of States, Local Governments, and Non-Profit Organizations"

1.4 Organizations other than those indicated above that are Recipients or sub-recipients shall use the basic principles of OMB Circular A-110 (Codification by Department of Interior, 43 CFR 12, Subpart F), and cost principles shall be in accordance with 48 CFR Subpart 31.2.

1.5 43 CFR 12.77 sets forth further regulations that govern the award and administration of sub-awards by State governments.

2. PAYMENT

2.1 Payment Standards. (43 CFR §12.61)

(a) *Scope.* This section prescribes the basic standard and the methods under which a Federal agency will make payments to grantees, and grantees will make payments to sub-grantees and contractors.

(b) *Basic standard.* Methods and procedures for payment shall minimize the time elapsing between the transfer of funds and disbursement by the grantee or sub-grantee, in accordance with Treasury regulations at 31 CFR Part 205.

(c) *Advances.* Grantees and sub-grantees shall be paid in advance, provided they maintain or demonstrate the willingness and ability to maintain procedures to minimize the time elapsing between the transfer of the funds and their disbursement by the grantee or sub-grantee.

(d) *Reimbursement.* Reimbursement shall be the preferred method when the requirements in paragraph (c) of this section are not met. Grantees and sub-grantees may also be paid by reimbursement for any construction grant. Except as otherwise specified in regulation, Federal agencies shall not use the percentage of completion method to pay construction grants. The grantee or sub-grantee may use that method to pay its construction contractor, and if it does, the awarding agency's payments to the grantee or sub-grantee will be based on the grantee's or sub-grantee's actual rate of disbursement.

(e) *Working capital advances.* If a grantee cannot meet the criteria for advance payments described in paragraph (c) of this section, and the Federal agency has determined that reimbursement is not feasible because the grantee lacks sufficient working capital, the awarding agency may provide cash or a working capital advance basis. Under this procedure the awarding agency shall advance cash to the grantee to cover its estimated disbursement needs for an initial period generally geared to the grantee's disbursing cycle. Thereafter, the awarding agency shall reimburse the grantee for its actual cash disbursements. The working capital advance method of payment shall not be used by grantees or sub-grantees if the reason for using such method is the unwillingness or inability of the grantee to provide timely advances to the sub-grantee to meet the sub-grantee's actual cash disbursements.

(f) *Effect of program income, refunds, and audit recoveries on payment.*

(1) Grantees and sub-grantees shall disburse repayments to and interest earned on a revolving fund before requesting additional cash payments for the same activity.
(2) Except as provided in paragraph (f)(1) of this section, grantees and sub-grantees shall disburse program income, rebates, refunds, contract settlements, audit recoveries and interest earned on such funds before requesting additional cash payments.

(g) *Withholding payments.*

(1) Unless otherwise required by Federal statute, awarding agencies shall not withhold payments for proper charges incurred by grantees or sub-grantees unless—

(i) The grantee or sub-grantee has failed to comply with grant award conditions, or

(ii) The grantee or sub-grantee is indebted to the United States.

(2) Cash withheld for failure to comply with grant award condition, but without suspension of the grant, shall be released to the grantee upon subsequent compliance. When a grant is suspended, payment adjustments will be made in accordance with §12.83(c).

(3) A Federal agency shall not make payment to grantees for amounts that are withheld by grantees or sub-grantees from payment to contractors to assure satisfactory completion of work. Payments shall be made by the Federal agency when the grantees or sub-grantees actually disburse the withheld funds to the contractors or to escrow accounts established to assure satisfactory completion of work.

(h) *Cash depositories.*

(1) Consistent with the national goal of expanding the opportunities for minority business enterprises, grantees and sub-grantees are encouraged to use minority banks (a bank which is owned at least 50 percent by minority group members). A list of minority owned banks can be obtained from the Minority Business Development Agency, Department of Commerce, Washington, DC 20230.

(2) A grantee or sub-grantee shall maintain a separate bank account only when required by Federal-State Agreement.

(i) *Interest earned on advances.* Except for interest earned on advances of funds exempt under the Intergovernmental Cooperation Act (31 U.S.C. 6501 et seq.) and the Indian Self-Determination Act (23 U.S.C. 450), grantees and sub-grantees shall promptly, but at least quarterly, remit interest earned on advances to the Federal agency. The grantee or sub-grantee may keep interest amounts up to $100 per year for administrative expenses.

2.2 Payment Method

Requesting Payments -- Requests for advance or reimbursement may be made by the following methods:

(1) SF-270, Request for Advance or Reimbursement - Recipients may submit an original and properly certified SF-270 form to the GO. For advance payments, this form may be submitted on a monthly basis, at least two weeks prior to the date on which funds are required, and on the basis of expected disbursements for the succeeding month and the amount of Federal funds already on hand. Requests for reimbursement may be submitted on a monthly basis, or more frequently if authorized by the (GO).

(2) SF-271, Outlay Report and Request for Reimbursement for Construction Programs - The SF-271 shall be used for construction Agreements paid by the reimbursement method, letter of credit, electronic funds transfer, or Treasury check advance, except where the advance is based on periodic requests from the Recipient, in which case the SF-270 shall be used. This request may be submitted on a quarterly basis, but no less frequently than on an annual basis. Recipients may submit an original, properly certified SF-271 form to the GO.

(3) Automated Standard Application for Payments (ASAP) - Recipients may utilize the Department of Treasury ASAP payment system to request advances or reimbursements. ASAP is a Recipient-initiated payment and information system designed to provide a single point of contact for the request and delivery of Federal funds.

Recipients interested in enrolling in the ASAP system, please contact Dee Devillier at 303-445-3461 or Sheri Oren at 303-445-3448.

3. PROCUREMENT STANDARDS (43 CFR §12.76)

(a) *States.* When procuring property and services under a grant, a State will follow the same policies and procedures it uses for procurements from its non-Federal funds. The State will ensure that every purchase order or other contract includes any clauses required by Federal statutes and executive orders and their implementing regulations. Other grantees and sub-grantees will follow paragraphs (b) through (i) in this section.

(b) *Procurement standards.*

(1) Grantees and sub-grantees will use their own procurement procedures which reflect applicable State and local laws and regulations, provided that the procurements conform to applicable Federal law and the standards identified in this section.

(2) Grantees and sub-grantees will maintain a contract administration system which ensures that contractors perform in accordance with the terms, conditions, and specifications of their contracts or purchase orders.

(3) Grantees and sub-grantees will maintain a written code of standards of conduct governing the performance of their employees engaged in the award and administration of contracts. No employee, officer or agent of the grantee or sub-grantee shall participate in selection, or in the award or administration of a contract supported by Federal funds if a conflict of interest, real or apparent, would be involved. Such a conflict would arise when:

(i) The employee, officer or agent.
(ii) Any member of his immediate family.

(iii) His or her partner, or

(iv) An organization which employs, or is about to employ, any of the above, has a financial or other interest in the firm selected for award. The grantee's or sub-grantee's officers, employees or agents will neither solicit nor accept gratuities, favors or anything of monetary value from contractors, potential contractors, or parties to sub-agreements. Grantee and sub-grantees may set minimum rules where the financial interest is not substantial or the gift is an unsolicited item of nominal intrinsic value. To the extent permitted by State or local law or regulations, such standards or conduct will provide for penalties, sanctions, or other disciplinary actions for violations of such standards by the grantee's and sub-grantee's officers, employees, or agents, or by contractors or their agents. The awarding agency may in regulation provide additional prohibitions relative to real, apparent, or potential conflicts of interest.

(4) Grantee and sub-grantee procedures will provide for a review of proposed procurements to avoid purchase of unnecessary or duplicative items. Consideration should be given to consolidating or breaking out procurements to obtain a more economical purchase. Where appropriate, an analysis will be made of lease versus purchase alternatives, and any other appropriate analysis to determine the most economical approach.

(5) To foster greater economy and efficiency, grantees and sub-grantees are encouraged to enter into State and local intergovernmental agreements for procurement or use of common goods and services.

(6) Grantees and sub-grantees are encouraged to use Federal excess and surplus property in lieu of purchasing new equipment and property whenever such use is feasible and reduces project costs.

(7) Grantees and sub-grantees are encouraged to use value engineering clauses in contracts for construction projects of sufficient size to offer reasonable opportunities for cost reductions. Value engineering is a systematic and creative analysis of each contract item or task to ensure that its essential function is provided at the overall lower cost.

(8) Grantees and sub-grantees will make awards only to responsible contractors possessing the ability to perform successfully under the terms and conditions of a proposed procurement. Consideration will be given to such matters as contractor integrity, compliance with public policy, record of past performance, and financial and technical resources.

(9) Grantees and sub-grantees will maintain records sufficient to detail the significant history of a procurement. These records will include, but are not necessarily limited to the following: rationale for the method of procurement, selection of contract type, contractor selection or rejection, and the basis for the contract price.

(10) Grantees and sub-grantees will use time and material type contracts only—

(i) After a determination that no other contract is suitable, and

(ii) If the contract includes a ceiling price that the contractor exceeds at its own risk.

(11) Grantees and sub-grantees alone will be responsible, in accordance with good administrative practice and sound business judgment, for the settlement of all contractual and administrative issues arising out of procurements. These issues include, but are not limited to source evaluation, protests, disputes, and claims. These standards do not relieve the grantee or sub-grantee of any contractual responsibilities under its contracts. Federal agencies will not substitute their judgment for that of the grantee or sub-grantee unless the matter is primarily a Federal concern. Violations of law will be referred to the local, State, or Federal authority having proper jurisdiction.

(12) Grantees and sub-grantees will have protest procedures to handle and resolve disputes relating to their procurements and shall in all instances disclose information regarding the protest to the awarding agency. A protestor must exhaust all administrative remedies with the grantee and sub-grantee before pursuing a protest with the Federal agency. Reviews of protests by the Federal agency will be limited to:

(i) Violations of Federal law or regulations and the standards of this section (violations of State or local law will be under the jurisdiction of State or local authorities) and

(ii) Violations of the grantee's or sub-grantee's protest procedures for failure to review a complaint or protest. Protests received by the Federal agency other than those specified above will be referred to the grantee or sub-grantee.

(c) *Competition.*

(1) All procurement transactions will be conducted in a manner providing full and open competition consistent with the standards of §12.76. Some of the situations considered to be restrictive of competition include but are not limited to:

(i) Placing unreasonable requirements on firms in order for them to qualify to do business,

(ii) Requiring unnecessary experience and excessive bonding,

(iii) Noncompetitive pricing practices between firms or between affiliated companies,

(iv) Non-competitive awards to consultants that are on retainer contracts,

(v) Organizational conflicts of interest,

(vi) Specifying only a "brand name" product instead of allowing "an equal" product to be offered and describing the performance of other relevant requirements of the procurement, and
(vii) Any arbitrary action in the procurement process.

(2) Grantees and sub-grantees will conduct procurements in a manner that prohibits the use of statutorily or administratively imposed in-State or local geographical preferences in the evaluation of bids or proposals, except in those cases where applicable Federal statutes expressly mandate or encourage geographic preference. Nothing in this section preempts State licensing laws. When contracting for architectural and engineering (A/E) services, geographic location may be a selection criteria provided its application leaves an appropriate number of qualified firms, given the nature and size of the project, to compete for the contract.

(3) Grantees will have written selection procedures for procurement transactions. These procedures will ensure that all solicitations:

(i) Incorporate a clear and accurate description of the technical requirements for the material, product, or service to be procured. Such description shall not, in competitive procurements, contain features which unduly restrict competition. The description may include a statement of the qualitative nature of the material, product or service to be procured, and when necessary, shall set forth those minimum essential characteristics and standards to which it must conform if it is to satisfy its intended use. Detailed product specifications should be avoided if at all possible. When it is impractical or uneconomical to make a clear and accurate description of the technical requirements, a "brand name or equal" description may be used as a means to define the performance or other salient requirements of a procurement. The specific features of the named brand which must be met by offerors shall be clearly stated; and

(ii) Identify all requirements which the offerors must fulfill and all other factors to be used in evaluating bids or proposals.

(4) Grantees and sub-grantees will ensure that all prequalified lists of persons, firms, or products which are used in acquiring goods and services are current and include enough qualified sources to ensure maximum open and free competition. Also, grantees and sub-grantees will not preclude potential bidders from qualifying during the solicitation period.

(d) *Methods of procurement to be followed* - (1) *Procurement by small purchase procedures.* Small purchase procedures are those relatively simple and informal procurement methods for securing services, supplies, or other property that do not cost more than the simplified acquisition threshold fixed at 41 U.S.C. 403(11) (currently set at $100,000). If small purchase procedures are used, price or rate quotations shall be obtained from an adequate number of qualified sources.

(2) Procurement by *sealed bids* (formal advertising). Bids are publicly solicited and a firm-fixed-price contract (lump sum or unit price) is awarded to the responsible bidder whose bid, conforming with all the material terms and conditions of the invitation for bids, is the lowest

in price. The sealed bid method is the preferred method for procuring construction, if the conditions in §12.76(d)(2)(i) apply.

(i) In order for sealed bidding to be feasible, the following conditions should be present:

(A) A complete, adequate, and realistic specification or purchase description is available;

(B) Two or more responsible bidders are willing and able to compete effectively and for the business; and

(C) The procurement lends itself to a firm fixed price contract and the selection of the successful bidder can be made principally on the basis of price.

(ii) If sealed bids are used, the following requirements apply:

(A) The invitation for bids will be publicly advertised and bids shall be solicited from an adequate number of known suppliers, providing them sufficient time prior to the date set for opening the bids;

(B) The invitation for bids, which will include any specifications and pertinent attachments, shall define the items or services in order for the bidder to properly respond;

(C) All bids will be publicly opened at the time and place prescribed in the invitation for bids;

(D) A firm fixed-price contract award will be made in writing to the lowest responsive and responsible bidder. Where specified in bidding documents, factors such as discounts, transportation cost, and life cycle costs shall be considered in determining which bid is lowest. Payment discounts will only be used to determine the low bid when prior experience indicates that such discounts are usually taken advantage of; and

(E) Any or all bids may be rejected if there is a sound documented reason.

(3) Procurement by *competitive proposals.* The technique of competitive proposals is normally conducted with more than one source submitting an offer, and either a fixed-price or cost-reimbursement type contract is awarded. It is generally used when conditions are not appropriate for the use of sealed bids. If this method is used, the following requirements apply:

(i) Requests for proposals will be publicized and identify all evaluation factors and their relative importance. Any response to publicized requests for proposals shall be honored to the maximum extent practical;

(ii) Proposals will be solicited from an adequate number of qualified sources;

(iii) Grantees and sub-grantees will have a method for conducting technical evaluations of the proposals received and for selecting awardees;

(iv) Awards will be made to the responsible firm whose proposal is most advantageous to the program, with price and other factors considered; and

(v) Grantees and sub-grantees may use competitive proposal procedures for qualifications-based procurement of architectural/engineering (A/E) professional services whereby competitors' qualifications are evaluated and the most qualified competitor is selected, subject to negotiation of fair and reasonable compensation. The method, where price is not used as a selection factor, can only be used in procurement of A/E professional services. It cannot be used to purchase other types of services though A/E firms are a potential source to perform the proposed effort.

(4) Procurement by *noncompetitive proposals* is procurement through solicitation of a proposal from only one source, or after solicitation of a number of sources, competition is determined inadequate.

(i) Procurement by noncompetitive proposals may be used only when the award of a contract is infeasible under small purchase procedures, sealed bids or competitive proposals and one of the following circumstances applies:

(A) The item is available only from a single source;

(B) The public exigency or emergency for the requirement will not permit a delay resulting from competitive solicitation;

(C) The awarding agency authorizes noncompetitive proposals; or

(D) After solicitation of a number of sources, competition is determined inadequate.

(ii) Cost analysis, i.e., verifying the proposed cost data, the projections of the data, and the evaluation of the specific elements of costs and profits, is required.

(iii) Grantees and sub-grantees may be required to submit the proposed procurement to the awarding agency for pre-award review in accordance with paragraph (g) of this section.

(e) *Contracting with small and minority firms, women's business enterprise and labor surplus area firms.* (1) The grantee and sub-grantee will take all necessary affirmative steps to assure that minority firms, women's business enterprises, and labor surplus area firms are used when possible.

(2) Affirmative steps shall include:

(i) Placing qualified small and minority businesses and women's business enterprises on solicitation lists;

(ii) Assuring that small and minority businesses, and women's business enterprises are solicited whenever they are potential sources;

(iii) Dividing total requirements, when economically feasible, into smaller tasks or quantities to permit maximum participation by small and minority business, and women's business enterprises;

(iv) Establishing delivery schedules, where the requirement permits, which encourage participation by small and minority business, and women's business enterprises;

(v) Using the services and assistance of the Small Business Administration, and the Minority Business Development Agency of the Department of Commerce; and

(vi) Requiring the prime contractor, if subcontracts are to be let, to take the affirmative steps listed in paragraphs (e)(2) (i) through (v) of this section.

(f) *Contract cost and price.*

(1) Grantees and sub-grantees must perform a cost or price analysis in connection with every procurement action including contract modifications. The method and degree of analysis is dependent on the facts surrounding the particular procurement situation, but as a starting point, grantees must make independent estimates before receiving bids or proposals. A cost analysis must be performed when the offeror is required to submit the elements of his estimated cost, e.g., under professional, consulting, and architectural engineering services contracts. A cost analysis will be necessary when adequate price competition is lacking, and for sole source procurements, including contract modifications or change orders, unless price reasonableness can be established on the basis of a catalog or market price of a commercial product sold in substantial quantities to the general public or based on prices set by law or regulation. A price analysis will be used in all other instances to determine the reasonableness of the proposed contract price.

(2) Grantees and sub-grantees will negotiate profit as a separate element of the price for each contract in which there is no price competition and in all cases where cost analysis is performed. To establish a fair and reasonable profit, consideration will be given to the complexity of the work to be performed, the risk borne by the contractor, the contractor's investment, the amount of subcontracting, the quality of its record of past performance, and industry profit rates in the surrounding geographical area for similar work.

(3) Costs or prices based on estimated costs for contracts under grants will be allowable only to the extent that costs incurred or cost estimates included in negotiated prices are consistent with Federal cost principles (see §12.62). Grantees may reference their own cost principles that comply with the applicable Federal cost principles.

(4) The cost plus a percentage of cost and percentage of construction cost methods of contracting shall not be used.

(g) *Awarding agency review.*

(1) Grantees and sub-grantees must make available, upon request of the awarding agency, technical specifications on proposed procurements where the awarding agency believes such review is needed to ensure that the item and/or service specified is the one being proposed for purchase. This review generally will take place prior to the time the specification is incorporated into a solicitation document. However, if the grantee or sub-grantee desires to have the review accomplished after a solicitation has been developed, the awarding agency may still review the specifications, with such review usually limited to the technical aspects of the proposed purchase.

(2) Grantees and sub-grantees must on request make available for awarding agency pre-award review procurement documents, such as requests for proposals or invitations for bids, independent cost estimates, etc. when:

(i) A grantee's or sub-grantee's procurement procedures or operation fails to comply with the procurement standards in this section; or

(ii) The procurement is expected to exceed the simplified acquisition threshold and is to be awarded without competition or only one bid or offer is received in response to a solicitation; or

(iii) The procurement, which is expected to exceed the simplified acquisition threshold, specifies a "brand name" product; or

(iv) The proposed award is more than the simplified acquisition threshold and is to be awarded to other than the apparent low bidder under a sealed bid procurement; or

(v) A proposed contract modification changes the scope of a contract or increases the contract amount by more than the simplified acquisition threshold.

(3) A grantee or sub-grantee will be exempt from the pre-award review in paragraph (g)(2) of this section if the awarding agency determines that its procurement systems comply with the standards of this section.

(i) A grantee or sub-grantee may request that its procurement system be reviewed by the awarding agency to determine whether its system meets these standards in order for its system to be certified. Generally, these reviews shall occur where there is a continuous high-dollar funding, and third-party contracts are awarded on a regular basis.

(ii) A grantee or sub-grantee may self-certify its procurement system. Such self-certification shall not limit the awarding agency's right to survey the system. Under a self-certification procedure, awarding agencies may wish to rely on written assurances

from the grantee or sub-grantee that it is complying with these standards. A grantee or sub-grantee will cite specific procedures, regulations, standards, etc., as being in compliance with these requirements and have its system available for review.

(h) *Bonding requirements.* For construction or facility improvement contracts or subcontracts exceeding the simplified acquisition threshold, the awarding agency may accept the bonding policy and requirements of the grantee or sub-grantee provided the awarding agency has made a determination that the awarding agency's interest is adequately protected. If such a determination has not been made, the minimum requirements shall be as follows:

(1) *A bid guarantee from each bidder equivalent to five percent of the bid price.* The "bid guarantee" shall consist of a firm commitment such as a bid bond, certified check, or other negotiable instrument accompanying a bid as assurance that the bidder will, upon acceptance of his bid, execute such contractual documents as may be required within the time specified.

(2) *A performance bond on the part of the contractor for 100 percent of the contract price.* A "performance bond" is one executed in connection with a contract to secure fulfillment of all the contractor's obligations under such contract.

(3) *A payment bond on the part of the contractor for 100 percent of the contract price.* A "payment bond" is one executed in connection with a contract to assure payment as required by law of all persons supplying labor and material in the execution of the work provided for in the contract.

(i) *Contract provisions.* A grantee's and sub-grantee's contracts must contain provisions in paragraph (i) of this section. Federal agencies are permitted to require changes, remedies, changed conditions, access and records retention, suspension of work, and other clauses approved by the Office of Federal Procurement Policy.

(1) Administrative, contractual, or legal remedies in instances where contractors violate or breach contract terms, and provide for such sanctions and penalties as may be appropriate. (Contracts more than the simplified acquisition threshold)

(2) Termination for cause and for convenience by the grantee or sub-grantee including the manner by which it will be effected and the basis for settlement. (All contracts in excess of $10,000)

(3) Compliance with Executive Order 11246 of September 24, 1965, entitled "Equal Employment Opportunity," as amended by Executive Order 11375 of October 13, 1967, and as supplemented in Department of Labor regulations (41 CFR Chapter 60). (All construction contracts awarded in excess of $10,000 by grantees and their contractors or sub-grantees)

(4) Compliance with the Copeland "Anti-Kickback" Act (18 U.S.C. 874) as supplemented in Department of Labor regulations (29 CFR Part 3). (All contracts and sub-grants for construction or repair)

(5) Compliance with the Davis-Bacon Act (40 U.S.C. 276a to 276a–7) as supplemented by Department of Labor regulations (29 CFR Part 5). (Construction contracts in excess of $2000 awarded by grantees and sub-grantees when required by Federal grant program legislation)

(6) Compliance with Sections 103 and 107 of the Contract Work Hours and Safety Standards Act (40 U.S.C. 327–330) as supplemented by Department of Labor regulations (29 CFR Part 5). (Construction contracts awarded by grantees and sub-grantees in excess of $2000, and in excess of $2500 for other contracts which involve the employment of mechanics or laborers)

(7) Notice of awarding agency requirements and regulations pertaining to reporting.

(8) Notice of awarding agency requirements and regulations pertaining to patent rights with respect to any discovery or invention which arises or is developed in the course of or under such contract.

(9) Awarding agency requirements and regulations pertaining to copyrights and rights in data.

(10) Access by the grantee, the sub-grantee, the Federal grantor agency, the Comptroller General of the United States, or any of their duly authorized representatives to any books, documents, papers, and records of the contractor which are directly pertinent to that specific contract for the purpose of making audit, examination, excerpts, and transcriptions.

(11) Retention of all required records for three years after grantees or sub-grantees make final payments and all other pending matters are closed.

(12) Compliance with all applicable standards, orders, or requirements issued under section 306 of the Clean Air Act (42 U.S.C. 1857(h)), section 508 of the Clean Water Act (33 U.S.C. 1368), Executive Order 11738, and Environmental Protection Agency regulations (40 CFR part 15). (Contracts, subcontracts, and sub-grants of amounts in excess of $100,000)

(13) Mandatory standards and policies relating to energy efficiency which are contained in the State energy conservation plan issued in compliance with the Energy Policy and Conservation Act (Pub. L. 94–163, 89 Stat. 871)

4. EQUIPMENT (43 CFR §12.72)

(a) *Title.* Subject to the obligations and conditions set forth in this section, title to equipment acquired under a grant or sub-grant will vest upon acquisition in the grantee or sub-grantee respectively.

(b) *States.* A State will use, manage, and dispose of equipment acquired under a grant by the State in accordance with State laws and procedures. Other grantees and sub-grantees will follow paragraphs (c) through (e) of this section.

(c) *Use.*

(1) Equipment shall be used by the grantee or sub-grantee in the program or project for which it was acquired as long as needed, whether or not the project or program continues to be supported by Federal funds. When no longer needed for the original program or project, the equipment may be used in other activities currently or previously supported by a Federal agency.

(2) The grantee or sub-grantee shall also make equipment available for use on other projects or programs currently or previously supported by the Federal Government, providing such use will not interfere with the work on the projects or program for which it was originally acquired. First preference for other use shall be given to other programs or projects supported by the awarding agency. User fees should be considered if appropriate.

(3) Notwithstanding the encouragement in §12.65(a) to earn program income, the grantee or sub-grantee must not use equipment acquired with grant funds to provide services for a fee to compete unfairly with private companies that provide equivalent services, unless specifically permitted or contemplated by Federal statute.

(4) When acquiring replacement equipment, the grantee or sub-grantee may use the equipment to be replaced as a trade-in or sell the property and use the proceeds to offset the cost of the replacement property, subject to the approval of the awarding agency.

(d) *Management requirements.* Procedures for managing equipment (including replacement equipment), whether acquired in whole or in part with grant funds, until disposition takes place will, as a minimum, meet the following requirements:

(1) Property records must be maintained that include a description of the property, a serial number or other identification number, the source of property, who holds title, the acquisition date, and cost of the property, percentage of Federal participation in the cost of the property, the location, use and condition of the property, and any ultimate disposition data including the date of disposal and sale price of the property.

(2) A physical inventory of the property must be taken and the results reconciled with the property records at least once every two years.

(3) A control system must be developed to ensure adequate safeguards to prevent loss, damage, or theft of the property. Any loss, damage, or theft shall be investigated.

(4) Adequate maintenance procedures must be developed to keep the property in good condition.

(5) If the grantee or sub-grantee is authorized or required to sell the property, proper sales procedures must be established to ensure the highest possible return.

(e) *Disposition.* When original or replacement equipment acquired under a grant or sub-grant is no longer needed for the original project or program or for other activities currently or previously supported by a Federal agency, disposition of the equipment will be made as follows:

(1) Items of equipment with a current per-unit fair market value of less than $5,000 may be retained, sold or otherwise disposed of with no further obligation to the awarding agency.

(2) Items of equipment with a current per unit fair market value in excess of $5,000 may be retained or sold and the awarding agency shall have a right to an amount calculated by multiplying the current market value or proceeds from sale by the awarding agency's share of the equipment.

(3) In cases where a grantee or sub-grantee fails to take appropriate disposition actions, the awarding agency may direct the grantee or sub-grantee to take excess and disposition actions.

(f) *Federal equipment.* In the event a grantee or sub-grantee is provided Federally-owned equipment:

(1) Title will remain vested in the Federal Government.

(2) Grantees or sub-grantees will manage the equipment in accordance with Federal agency rules and procedures, and submit an annual inventory listing.

(3) When the equipment is no longer needed, the grantee or sub-grantee will request disposition instructions from the Federal agency.

(g) *Right to transfer title.* The Federal awarding agency may reserve the right to transfer title to the Federal Government or a third part named by the awarding agency when such a third party is otherwise eligible under existing statutes. Such transfers shall be subject to the following standards:

(1) The property shall be identified in the grant or otherwise made known to the grantee in writing.

(2) The Federal awarding agency shall issue disposition instruction within 120 calendar days after the end of the Federal support of the project for which it was acquired. If the Federal awarding agency fails to issue disposition instructions within the 120 calendar-day period the grantee shall follow 12.72(e).

(3) When title to equipment is transferred, the grantee shall be paid an amount calculated by applying the percentage of participation in the purchase to the current fair market value of the property.

5. SUPPLIES (43 CFR §12.73)

(a) *Title.* Title to supplies acquired under a grant or sub-grant will vest, upon acquisition, in the grantee or sub-grantee respectively.

(b) *Disposition.* If there is a residual inventory of unused supplies exceeding $5,000 in total aggregate fair market value upon termination or completion of the award, and if the supplies are not needed for any other federally sponsored programs or projects, the grantee or sub-grantee shall compensate the awarding agency for its share.

6. INSPECTION

Reclamation has the right to inspect and evaluate the work performed or being performed under this Agreement, and the premises where the work is being performed, at all reasonable times and in a manner that will not unduly delay the work. If Reclamation performs inspection or evaluation on the premises of the Recipient or a sub-Recipient, the Recipient shall furnish and shall require sub-recipients to furnish all reasonable facilities and assistance for the safe and convenient performance of these duties.

7. AUDIT (31 U.S.C. 7501-7507)

Non-Federal entities that expend $500,000 or more in a year in Federal awards shall have a single or program-specific audit conducted for that year in accordance with the Single Audit Act Amendments of 1996 (31 U.S.C. 7501-7507) and revised OMB Circular A-133. Federal awards are defined as Federal financial assistance and Federal cost-reimbursement contracts that non-Federal entities receive directly from Federal awarding agencies or indirectly from pass-through entities. They do not include procurement contracts, under grants or contracts, used to buy goods or services from vendors. Non-Federal entities that expend less than $500,000 a year in Federal awards are exempt from Federal audit requirements for that year, except as noted in A-133, §___.215(a), but records must be available for review or audit by appropriate officials of the Federal agency, pass-through entity, and General Accounting Office (GAO).

8. ENFORCEMENT (43 CFR §12.83)

(a) *Remedies for noncompliance.* If a grantee or sub-grantee materially fails to comply with any term of an award, whether stated in a Federal statute or regulation, an assurance, in a State plan or application, a notice of award, or elsewhere, the awarding agency may take one or more of the following actions, as appropriate in the circumstances:

(1) Temporarily withhold cash payments pending correction of the deficiency by the grantee or sub-grantee or more severe enforcement action by the awarding agency,

(2) Disallow (that is, deny both use of funds and matching credit for) all or part of the cost of the activity or action not in compliance,

(3) Wholly or partly suspend or terminate the current award for the grantee's or sub-grantee's program,

(4) Withhold further awards for the program, or

(5) Take other remedies that may be legally available.

(b) *Hearings, appeals.* In taking an enforcement action, the awarding agency will provide the grantee or sub-grantee an opportunity for such hearing, appeal, or other administrative proceeding to which the grantee or sub-grantee is entitled under any statute or regulation applicable to the action involved.

(c) *Effects of suspension and termination.* Costs of grantee or sub-grantee resulting from obligations incurred by the grantee or sub-grantee during a suspension or after termination of an award are not allowable unless the awarding agency expressly authorizes them in the notice of suspension or termination or subsequently. Other grantee or sub-grantee costs during suspension or after termination which are necessary and not reasonably avoidable are allowable if:

(1) The costs result from obligations which were properly incurred by the grantee or sub-grantee before the effective date of suspension or termination, are not in anticipation of it, and, in the case of a termination, are non-cancellable, and.

(2) The costs would be allowable if the award were not suspended or expired normally at the end of the funding period in which the termination takes effect.

(d) *Relationship to Debarment and Suspension.* The enforcement remedies identified in this section, including suspension and termination, do not preclude grantee or sub-grantee from being subject to "Debarment and Suspension" under E.O. 12549 ((2 CFR 29.5.12 and 2 CFR 1400, Subpart C).

9. TERMINATION FOR CONVENIENCE (43 CFR §12.84)

Except as provided in 43 CFR §12.83 awards may be terminated in whole or in part only as follows:

(a) By the awarding agency with the consent of the grantee or sub-grantee in which case the two parties shall agree upon the termination conditions, including the effective date and in the case of partial termination, the portion to be terminated, or

(b) By the grantee or sub-grantee upon written notification to the awarding agency, setting forth the reasons for such termination, the effective date, and in the case of partial termination, the portion to be terminated. However, if, in the case of a partial termination, the awarding agency determines that the remaining portion of the award will not accomplish the purposes for which the award was made, the awarding agency may terminate the award in its entirety under either §12.83 or paragraph (a) of this section.

10. DEBARMENT AND SUSPENSION (2 CFR §1400)

The Department of the Interior regulations at 2 CFR 1400—Governmentwide Debarment and Suspension (Non-procurement), which adopt the common rule for the government-wide system of debarment and suspension for non-procurement activities, are hereby incorporated by reference and made a part of this Agreement. By entering into this grant or cooperative Agreement with the Bureau of Reclamation, the Recipient agrees to comply with 2 CFR 1400,

Subpart C, and agrees to include a similar term or condition in all lower-tier covered transactions. These regulations are available at http://www.gpoaccess.gov/ecfr/.

11. DRUG-FREE WORKPLACE (43 CFR §43)

The Department of the Interior regulations at 43 CFR 43—Governmentwide Requirements for Drug-Free Workplace (Financial Assistance), which adopt the portion of the Drug-Free Workplace Act of 1988 (41 U.S.C. 701 et seq, as amended) applicable to grants and cooperative Agreements, are hereby incorporated by reference and made a part of this Agreement. By entering into this grant or cooperative Agreement with the Bureau of Reclamation, the Recipient agrees to comply with 43 CFR 43, Subpart B, if the Recipient is not an individual, or with 43 CFR 43, Subpart C, if the Recipient is an individual. These regulations are available at http://www.gpoaccess.gov/ecfr/.

12. ASSURANCES AND CERTIFICATIONS INCORPORATED BY REFERENCE

The provisions of the Assurances, SF 424B or SF 424D as applicable, executed by the Recipient in connection with this Agreement shall apply with full force and effect to this Agreement. All anti-discrimination and equal opportunity statutes, regulations, and Executive Orders that apply to the expenditure of funds under Federal contracts, grants, and cooperative Agreements, loans, and other forms of Federal assistance. The Recipient shall comply with Title VI or the Civil Rights Act of 1964, Title IX of the Education Amendments of 1972, Section 504 of the Rehabilitation Act of 1973, the Age Discrimination Act of 1975, and nay program-specific statutes with anti-discrimination requirements. The Recipient shall comply with civil rights laws including, but not limited to, the Fair Housing Act, the Fair Credit Reporting Act, the Americans with Disabilities Act, Title VII of the Civil Rights Act of 1964, the Equal Educational Opportunities Act, the Age Discrimination in Employment Act, and the Uniform Relocation Act.

Such Assurances also include, but are not limited to, the promise to comply with all applicable Federal statutes and orders relating to nondiscrimination in employment, assistance, and housing; the Hatch Act; Federal wage and hour laws and regulations and work place safety standards; Federal environmental laws and regulations and the Endangered Species Act; and Federal protection of rivers and waterways and historic and archeological preservation.

13. COVENANT AGAINST CONTINGENT FEES

The Recipient warrants that no person or agency has been employed or retained to solicit or secure this Agreement upon an Agreement or understanding for a commission, percentage, brokerage, or contingent fee, excepting bona fide employees or bona fide offices established and maintained by the Recipient for the purpose of securing Agreements or business. For breach or violation of this warranty, the Government shall have the right to annul this Agreement without liability or, in its discretion, to deduct from the Agreement amount, or otherwise recover, the full amount of such commission, percentage, brokerage, or contingent fee

14. TRAFFICKING VICTIMS PROTECTION ACT OF 2000 (2 CFR §175.15)

(a) To implement the trafficking in persons requirement in section 106(g) of the TVPA, as amended, a Federal awarding agency must include the award term in paragraph (b) of this section in—

(1) A grant or cooperative agreement to a private entity, as defined in §175.25(d); and

(2) A grant or cooperative agreement to a State, local government, Indian tribe or foreign public entity, if funding could be provided under the award to a private entity as a sub-recipient.

(b) The award term that an agency must include, as described in paragraph (a) of this section, is:

I. Trafficking in persons.

a. *Provisions applicable to a recipient that is a private entity.*

1. You as the recipient, your employees, sub-recipients under this award, and sub-recipients' employees may not—

i. Engage in severe forms of trafficking in persons during the period of time that the award is in effect;

ii. Procure a commercial sex act during the period of time that the award is in effect; or

iii. Use forced labor in the performance of the award or sub-awards under the award.

2. We as the Federal awarding agency may unilaterally terminate this award, without penalty, if you or a sub-recipient that is a private entity —

i. Is determined to have violated a prohibition in paragraph a.1 of this award term; or

ii. Has an employee who is determined by the agency official authorized to terminate the award to have violated a prohibition in paragraph a.1 of this award term through conduct that is either—.

A. Associated with performance under this award; or

B. Imputed to you or the sub-recipient using the standards and due process for imputing the conduct of an individual to an organization that are provided in 2 CFR part 180, "OMB Guidelines to Agencies on Government-wide Debarment and Suspension (Non-procurement)," as implemented by our agency at *2 CFR part 1400*.

b. *Provision applicable to a recipient other than a private entity.* We as the Federal awarding agency may unilaterally terminate this award, without penalty, if a sub-recipient that is a private entity—

1. Is determined to have violated an applicable prohibition in paragraph a.1 of this award term; or

2. Has an employee who is determined by the agency official authorized to terminate the award to have violated an applicable prohibition in paragraph a.1 of this award term through conduct that is either -

i. Associated with performance under this award; or

ii. Imputed to the sub-recipient using the standards and due process for imputing the conduct of an individual to an organization that are provided in 2 CFR part 180, "OMB Guidelines to Agencies on Government-wide Debarment and Suspension (Non-procurement)," as implemented by our agency at *2 CFR part 1400.*

c. *Provisions applicable to any recipient.*

1. You must inform us immediately of any information you receive from any source alleging a violation of a prohibition in paragraph a.1 of this award term.

2. Our right to terminate unilaterally that is described in paragraph a.2 or b of this section:

i. Implements section 106(g) of the Trafficking Victims Protection Act of 2000 (TVPA), as amended (22 U.S.C. 7104(g)), and

ii. Is in addition to all other remedies for noncompliance that are available to us under this award.

3. You must include the requirements of paragraph a.1 of this award term in any sub-award you make to a private entity.

d. *Definitions.* For purposes of this award term:

1. "Employee" means either:

i. An individual employed by you or a sub-recipient who is engaged in the performance of the project or program under this award; or

ii. Another person engaged in the performance of the project or program under this award and not compensated by you including, but not limited to, a volunteer or individual whose services are contributed by a third party as an in-kind contribution toward cost sharing or matching requirements.

2. "Forced labor" means labor obtained by any of the following methods: the recruitment, harboring, transportation, provision, or obtaining of a person for labor or services, through the use of force, fraud, or coercion for the purpose of subjection to involuntary servitude, peonage, debt bondage, or slavery.

3. "Private entity":

i. Means any entity other than a State, local government, Indian tribe, or foreign public entity, as those terms are defined in 2 CFR 175.25.

ii. Includes:

A. A nonprofit organization, including any nonprofit institution of higher education, hospital, or tribal organization other than one included in the definition of Indian tribe at 2 CFR 175.25(b).

B. A for-profit organization.

4. "Severe forms of trafficking in persons," "commercial sex act," and "coercion" have the meanings given at section 103 of the TVPA, as amended (22 U.S.C. 7102).
(c) An agency may use different letters and numbers to designate the paragraphs of the award term in paragraph (b) of this section, if necessary, to conform the system of paragraph designations with the one used in other terms and conditions in the agency's awards

15. NEW RESTRICTIONS ON LOBBYING (43 CFR §18)

The Recipient agrees to comply with 43 CFR 18, New Restrictions on Lobbying, including the following certification:

(1) No Federal appropriated funds have been paid or will be paid, by or on behalf of the Recipient, to any person for influencing or attempting to influence an officer or employee of an agency, a Member of Congress, and officer or employee of Congress, or an employee of a Member of Congress in connection with the awarding of any Federal contract, the making of any Federal grant, the making of any Federal loan, the entering into of any cooperative agreement, and the extension, continuation, renewal, amendment, or modification of any Federal contract, grant, loan, or cooperative agreement.

(2) If any funds other than Federal appropriated funds have been paid or will be paid to any person for influencing or attempting to influence an officer or employee of any agency, a Member of Congress, an officer or employee of Congress, or an employee of a Member of Congress in connection with this Federal contract, grant, loan, or cooperative agreement, the undersigned shall complete and submit Standard Form-LLL, "Disclosure Form to Report Lobbying" in accordance with its instructions.
(3) The Recipient shall require that the language of this certification be included in the award documents for all sub-awards at all tiers (including subcontracts, sub-grants, and contracts under grants, loans, and cooperative agreements) and that all sub-recipients shall certify accordingly.

This certification is a material representation of fact upon which reliance was placed when this transaction was made or entered into. Submission of this certification is a prerequisite for making or entering into this transaction imposed by Section 1352, title 31, U.S. Code. Any person who fails to file the required certification shall be subject to a civil penalty of not less than $10,000 and not more than $100,000 for each such failure.

ATTACHMENT B

United States Department of the Interior, Bureau of Reclamation, American Recovery and Reinvestment Act of 2009 (ARRA)

7-2279 (05-22-09)
Bureau of Reclamation

UNITED STATES DEPARTMENT OF THE INTERIOR
BUREAU OF RECLAMATION
ASSISTANCE AGREEMENT

Page 1 of 55

1A. AGREEMENT NUMBER	1B. MOD NUMBER	2. TYPE OF AGREEMENT	3. CLASS OF RECIPIENT
R10AC20R87		[ ] GRANT [X] COOPERATIVE AGREEMENT	Special District

4. ISSUING OFFICE (NAME, ADDRESS)
U.S. Department of the Interior
Bureau of Reclamation
Mid-Pacific Region
2800 Cottage Way, Room E-1815
Sacramento CA 95825-1898

DUNS: **098-86-5801** EIN: **84-1024566**

5. RECIPIENT (NAME, ADDRESS, TELEPHONE)
Sonoma County Water Agency
404 Aviation Blvd.
Santa Rosa, California 95403
Phone: (707) 547-1911

EIN #:	94-1695531	County:	Santa Clara
DUNS #:	069-12-8999	Congress. Dist	15

6. ADMINISTRATIVE POINT OF CONTACT (NAME, ADDRESS, TELEPHONE, E-MAIL)
Ms. Maria E. Castaneda, MP 3813 Phone: (916) 978-5148
U.S. Department of the Interior Fax: (916) 978-5175
Bureau of Reclamation
Mid-Pacific Region
2800 Cottage Way, Room E-1815
Sacramento, California 95825-1898
Email: mcastaneda@usbr.gov

7. RECIPIENT PROJECT MANAGER (NAME, ADDRESS, TELEPHONE, E-MAIL)
Mr. Grant Davis Phone: (707) 547-1911
Sonoma County Water Agency Fax: (707) 524-3782
404 Aviation Blvd.
Santa Rosa, California 95403
E-mail: grant.davis@scwa.ca.gov

8. GRANTS OFFICER TECHNICAL REPRESENTATIVE (NAME, ADDRESS, TELEPHONE, E-MAIL)
Mr. David White, MP-700 Phone: (916) 978-5074
U.S. Department of the Interior Fax: (916) 978-5094
Bureau of Reclamation
Mid-Pacific Region
2800 Cottage Way
Sacramento, CA 95825
E-mail: dwhite@usbr.gov

9A. INITIAL AGREEMENT EFFECTIVE DATE: See Block 17a

9B. MODIFICATION EFFECTIVE DATE: N/A

10. COMPLETION DATE September 30, 2012

11. PROGRAM STATUTORY AUTHORITY
Public Law: Section 9110, Reclamation Wastewater and Groundwater Study and Facilities Act (Public Law 102-575, Title XVI, as amended by Section 9109(a)) is amended by adding Section 1651- North Bay Water Reuse Program

CFDA 15.504

12. FUNDING INFORMATION	RECIPIENT/OTHER	RECLAMATION
Total Estimated Amount of Agreement	$29,200,000.00	$7,328,000.00
This Obligation	$29,200,000.00	$7,203,000.00
Previous Obligation	$ 0.00	$ 0.00
Total Obligation	$29,200,000.00	$7,203,000.00
Cost-Share %	75%	25%

13. REQUISITION NUMBER 10203000073

14A. ACCOUNTING AND APPROPRIATION DATA
Cost Authority: 121-1993-2000-000-00-0-S
Cost Center: 2030000
Object Code: 411C

14B. TREASURY ACCOUNT FUNDING SYMBOL 14X0681

15. PROJECT TITLE AND BRIEF SUMMARY OF PURPOSE AND OBJECTIVES OF PROJECT
Project Title: North San Pablo Bay Restoration and Reuse Project
Summary Description: The proposed Project would build on commitments to long-term inter-agency cooperation to address common needs related to reliable water supplies and enhanced environmental restoration.

16a. Acceptance of this Assistance Agreement in accordance with the terms and conditions contained herein is hereby made on behalf of the above-named Recipient
BY: _____
DATE: 9-15-10

17a. Award of this Assistance Agreement in accordance with the terms and conditions contained herein is hereby made on behalf of the United States of America, Bureau of Reclamation
BY: _____
DATE: 9/16/2010

16b. NAME, TITLE, AND TELEPHONE NUMBER OF SIGNER

☐ Additional signatures are attached

17b. NAME OF GRANTS OFFICER
Maria E. Castaneda

DOCUMENTS INCORPORATED HEREIN BY REFERENCE:

TABLE OF CONTENTS

I. OVERVIEW AND SCHEDULE 3
1. AUTHORITY 3
2. Public Purpose 4
3. Background and Objectives 4
4. Period of Performance and Funds Availability 5
5. Scope of Work 6
6. Responsibility of the Parties 7
7. Budget 8
8. Key Personnel 10
9. Reporting Requirements and Distribution 12
10. Regulatory Compliance 15
11. Reclamation Wage Rate Implementation Requirements 16
II. STANDARD TERMS AND CONDITIONS FOR FINANCIAL ASSISTANCE AWARDS FUNDED BY THE AMERICAN RECOVERY AND REINVESTMENT ACT OF 2009 (PUB.L 111-5) 17
1. Required Use of American Iron, Steel, and Manufactured Goods-Section 1605 of the American Recovery and Reinvestment Act of 2009 (2 CFR §176.140) 17
2. Required Use of American Iron, Steel, and Manufactured Goods (covered under International Agreements)—Section 1605 of the American Recovery and Reinvestment Act of 2009. (2 CFR §176.160) 19
3. Recovery Act Transactions listed in Schedule of Expenditures of Federal Awards and Recipient Responsibilities for Informing Sub-recipients. (2 CFR §176.210) 23
4. Wage Rate Requirements - Section 1605 of the American Recovery and Reinvestment Act of 2009. (29 CFR §5.5) 24
5. Section 1511 Infrastructure Certification 30
6. Section 1515 – Access of Offices of Inspector General to Certain Records and Employees 30
7. Section 1553 – Protecting State and Local Government and Contractor Whistleblowers 31
8. Section 1604 – Limit on Funds 31
III. RECLAMATION STANDARD TERMS AND CONDITIONS - STATES, LOCAL GOVERNMENTS, AND FEDERALLY RECOGNIZED INDIAN TRIBAL GOVERNMENTS 32
1. Regulations and Guidance 32
2. Payment 33
3. Procurement Standards (43 CFR §12.76) 35
4. Equipment (43 CFR §12.72) 45
5. Supplies (43 CFR §12.73) 47
6. Inspection 47
7. Audit (31 U.S.C. 7501-7507) 47
8. Enforcement (43 CFR §12.83) 48
9. Termination For Convenience (43 CFR §12.84 49
10. Debarment and Suspension (2 CFR Part 1400) 49
11. Drug-Free Workplace (43 CFR Part 43) 49
12. Assurances and Certifications Incorporated by Reference 49
13. Covenant Against Contingent Fees 50
14. Trafficking Victims Protection Act of 2000, PL 106-386, as amended (2 CFR §175.15) 50
15. Contracting with Small and Minority Firms and Women's Business Enterprises 53
16. Endorsement of Commercial Products and Services 53
17. Uniform Relocation Assistance and Real Property Acquisition Policies Act of 1970 (URA) (42 USC § 4601 *et. Seq)* 54

Cooperative Agreement
Between
Bureau of Reclamation
And
Sonoma County Water Agency
For
American Recovery and Reinvestment Act of 2009
North San Pablo Bay Restoration and Reuse Project

I. OVERVIEW AND SCHEDULE

1. Authority

This Cooperative Agreement (Agreement) is entered into between the United States of America, acting through the Department of the Interior, Bureau of Reclamation, hereinafter referred to as "Reclamation," and Sonoma County Water Agency hereinafter referred to as the "Recipient" or "Grantee" pursuant to ***The Reclamation Wastewater and Groundwater Study and Facilities Act (Public Law 102-575, Title XVI; 43 USC 390h et seq) is amended by Public Law 111-11, Title IX, Section 9110(a) as follows:***

SECTION 1651- NORTH BAY WATER REUSE PROGRAM (43 USC 390h-34)

(a) DEFINITIONS - In this section:
(1) ELIGIBLE ENTITY.—The term 'eligible entity' means a member agency of the ***North Bay Water Reuse Authority*** *of the State located in the* ***North San Pablo Bay*** *watershed in - (A) Marin County; (B) Napa County; (C) Solano County; or (D)* ***Sonoma County****.*
(2) WATER RECLAMATION AND REUSE PROJECT - The term 'water reclamation and reuse project' means a project carried out by the Secretary and an eligible entity in the North San Pablo Bay watershed relating to—
(A) water quality improvement; (B) wastewater treatment; (C) water reclamation and reuse; (D) groundwater recharge and protection; (E) surface water augmentation; or (F) other related improvements.
(3) STATE - The term 'State' means the State of California.
(b) NORTH BAY WATER REUSE PROGRAM -
(1) IN GENERAL.—Contingent upon a finding of feasibility, the Secretary, acting through a cooperative agreement with the State or a subdivision of the State, is authorized to enter into cooperative agreements with eligible entities for the planning, design, and construction of water reclamation and reuse facilities and recycled water conveyance and distribution systems.
(2) COORDINATION WITH OTHER FEDERAL AGENCIES - In carrying out this section, the Secretary and the eligible entity shall, to the maximum extent practicable, use the design work and environmental evaluations initiated by -
(A) non-Federal entities; and ''(B) the Corps of Engineers in the San Pablo Bay Watershed of the State.
(3) PHASED PROJECT - A cooperative agreement described in paragraph (1) shall require that the North Bay Water Reuse Program carried out under this section shall consist of 2 phases as follows:
(A) FIRST PHASE - During the first phase, the Secretary and an eligible entity shall complete the planning, design, and construction of the main treatment and main conveyance systems. ''(B) SECOND PHASE - During the second phase, the Secretary and an eligible entity shall complete the planning, design, and construction of the sub-regional distribution systems.

(4) COST SHARING - (A) FEDERAL SHARE - The Federal share of the cost of the first phase of the project authorized by this section shall not exceed 25 percent of the total cost of the first phase of the project.
(B) FORM OF NON-FEDERAL SHARE - The non-Federal share may be in the form of any in-kind services that the Secretary determines would contribute substantially toward the completion of the water reclamation and reuse project, including - (i) reasonable costs incurred by the eligible entity relating to the planning, design, and construction of the water reclamation and reuse project; and (ii) the acquisition costs of land acquired for the project that is - (I) used for planning, design, and construction of the water reclamation and reuse project facilities; and (II) owned by an eligible entity and directly related to the project.
(C) LIMITATION - The Secretary shall not provide funds for the operation and maintenance of the project authorized by this section.
(5) EFFECT.—Nothing in this section - (A) affects or preempts - (i) State water law; or (ii) an interstate compact relating to the allocation of water; or (B) confers on any non-Federal entity the ability to exercise any Federal right to - (i) the water of a stream; or (ii) any groundwater resource.
(6) AUTHORIZATION OF APPROPRIATIONS - There is authorized to be appropriated for the Federal share of the total cost of the first phase of the project authorized by this section $25,000,000, to remain available until expended.

2. Public Purpose

This Project consists of the planning, design, and construction of multi-county activities that will provide recycled water for agricultural, urban, and environmental uses and to expand the recycled water system in the North Bay region. The Project will include upgrades of treatment processes and construction of storage, pipelines, and pump station facilities to distribute recycled water for use in compliance with Article 4 in Title 22 of the California Code of Regulations. The Project will reduce reliance on local and imported surface water and groundwater supplies and reduce the amount of treated effluent releases to San Pablo Bay and its tributaries. By diversifying the types of water available, the water supply and distribution system available to North Bay communities will be more efficient and effective. Therefore, the benefits of the Project are multi-purpose and will assist Reclamation in fulfilling its responsibilities under Title XVI of P.L. 102-575, as amended, and other related legislation towards improving water supply reliability and treating impaired water.

3. Background and Objectives

The objective of the cooperative agreement will be to reimburse Sonoma County Water Agency (SCWA) for the appropriate Federal cost share associated with the Project, which, when combined with their non-ARRA funded agreement, will be the lesser of 25% of the total project cost or $25,000,000. Based on documents submitted to Reclamation, the total project cost for the ARRA agreement is $29,312,000, and the associated Federal Cost Share is $7,328,000.

SCWA administers the Project on behalf of the North Bay Recycled Water Program (NBWRA), which is comprised of multiple members. SCWA submitted documents that represent the totality of the Project while showing the costs for each member agency's specific project. Pursuant to Section 1651(a)(1) of P.L. 102-575, SCWA is eligible to receive and administer Federal funds on behalf of NBWRA and its member agencies. NBWRA Member Agencies collectively prioritized the projects within their individual service areas to establish an Implementation Plan identifying the order in which projects will be constructed. Phase 1 projects are defined to a level of detail that allows project-level environmental review. These projects are collectively referred to as Phase 1 Projects. The Phase 1 Projects will include approximately 46.3 miles of new pipeline, will annually recycle approximately 3,943 acre-feet (AF), will increase the regional system capacity to 7.4 mgd, will include new pumps totaling approximately 1,978

horsepower (HP), will create an additional 65 AF of storage, will rehabilitate an existing reservoir, and will construct multiple new water service connections and rehabilitate multiple existing water service connections.

As required by Reclamation Manual Directive and Standard WTR 11-01, SCWA conducted a Feasibility Study and detailed the study and its findings in a Feasibility Report. Upon review of the Feasibility Report, Reclamation gave the Project a positive determination of feasibility; subsequent to that, Congress authorized the Project for construction through Section 9110 of P.L. 111-11, "North Bay Water Reuse Authority", which amends Title XVI, the Wastewater and Groundwater Study and Facilities Act of 1992, of P.L. 102-575 to add Section 1651, "North Bay Water Reuse Program".

Details of the Project may be found in the Feasibility Report. The Project's objectives were rigorously reviewed by Reclamation and are clearly defined and feasible. In a separate analysis, Reclamation will determine whether the Project complies with all applicable Federal environmental and cultural resources rules and regulations.

4. Period of Performance and Funds Availability

This Agreement becomes effective on the date shown in Block 17a of Form 7-2279, United States of America, Department of the Interior, Bureau of Reclamation, Assistance Agreement. The Agreement shall remain in effect until the date shown in Block 10 of Form 7-2279, United States of America, Department of the Interior, Bureau of Reclamation, Assistance Agreement. The period of performance for this Agreement may only be modified through written modification of the Agreement by a Reclamation Grants Officer (GO).

Funds for payment under this Agreement are included in the ***American Recovery and Reinvestment Act of 2009, Public Law 111-5***. Funding for any optional year of the Agreement is contingent upon subsequent Congressional funding.

Reclamation has $7,328,000.00 funding available ($125,000.00 set aside for admin environmental work and for post award monitoring and oversight) for this Agreement. The Government's obligation under this Agreement is contingent upon the availability of appropriated funds from which payment for Agreement purposes can be made. No legal liability on the part of the Government for any payment may arise until funds are made available to the GO for this Agreement, and until the Recipient receives notice of such availability through formal modification of this Agreement by the GO.

It is recognized and agreed that all costs incurred by Reclamation related to the development and administration of this Agreement and all costs associated with carrying out Reclamation's responsibilities as provided in Section I.6.2 of this agreement, are considered part of the total costs of the Project, and therefore the Recipient is responsible for 75 percent of these costs. These costs include, but are not limited to, salary, overhead, travel, and other costs directly or indirectly related to the Agreement, as determined by Reclamation. Following the completion of each quarter of the federal fiscal year, Reclamation shall provide the Recipient with a statement of Reclamation's costs for the previous quarter. The Recipient may request explanations or a review of the costs included in the statement; however, Reclamation's determination as to the validity of the costs is final. The Recipient's 75 percent share of Reclamation's costs will be deducted from payments processed by Reclamation under this Agreement for the previous quarter.

5. **Scope of Work**

Novato South Service Area—Hamilton Field:
Complete planning activities, environmental review, engineering design, and permitting for both the recycled water distribution/storage system and the wastewater treatment plant upgrade and tertiary treatment plant expansion. Complete multiple studies intended to maximize efficiency and use of the treatment facilities.

Complete construction activities for: 1) upgrading the wastewater treatment plant to a tertiary level of treatment or expand the existing tertiary plant; 2) a recycled water distribution and storage system to serve a portion of the Hamilton Field area; 3) including approximately 3.4 miles of pipeline and associated appurtenances (aka Phase 1).

Novato North Service Area:
Complete planning and other pre-construction activities, environmental review, engineering design, and permitting.

Expand the treatment capacity at the Novato Sanitary District's wastewater treatment plant.
Initiate construction activities for: 1) a distribution water pump station; 2) multiple improvements to the Plum Street Tank; 3) approximately 4.6 miles of water distribution pipeline including a distribution pipeline to serve the Valley Memorial Park Cemetery; and 3) connection of the rehabilitated/improved Plum Street Tank to the recycled water facility at the wastewater treatment plant to provide diurnal storage.

Napa-Sonoma Salt Marsh Pipeline:
Complete planning and other pre-construction activities, environmental review, engineering design, and permitting. Initiate construction for distribution pipeline from the Sonoma Valley County Sanitation District wastewater treatment plant north to Watmaugh Road.

Purchase property for, and design and construct a recycled water reservoir with a capacity between 60 and 100 AF.

Design and initiate construction of improvements at the Sonoma Valley County Sanitation District's wastewater treatment plant.

Design and initiate construction of approximately 7.5 miles of 18- to 24-inch pipe between the wastewater treatment plant and the salt ponds located in the Napa-Sonoma Marshes Wildlife Area.

Miliken-Sarco-Tulocay Area Project:
Begin and/or complete planning environmental review, and design activities, including surveying, right-of-way work, preliminary and final designs, and permitting.

Initiate construction activities for: 1) the Napa State Hospital pipeline segment; 2) remaining pipeline installation; 3) a new pump station; and 4) improvements to the existing pump station.

Novato Central Service Area:
Initiate construction activities for: 1) a recycled water distribution system from the Novato Sanitary District recycled water facility south to serve urban users west of Highway 101; 2) an 18-inch pipeline from the Novato Sanitary District recycled water facility north through Novato to deliver recycled water to Novato High School and other irrigated playing fields, with a 10-inch line extending south; 3) decommissioning the existing recycled water treatment facility and relocating it to the Novato Sanitary

District wastewater treatment plant; and 4) a new pipeline to connect the wastewater treatment plant with the North Service Area pipeline .

6. Responsibility of the Parties

6.1 Recipient Responsibilities

6.1.1 The Recipient shall **be responsible for carrying out** the scope of work, Section 5, in accordance with the terms and conditions of this Agreement. The Recipient shall adhere to Federal, state, and local laws, regulations, and codes, as applicable, and shall obtain all required approvals and permits. If applicable, the Recipient shall also coordinate and obtain approvals from site owners and operators.

6.1.2 Additional Recipient Responsibilities include:

(a) Contribute at least 75 percent of the total cost to complete the activities identified in the Scope of Work of this Agreement. These funds must not be obtained from any Federal source.

(b) Consult with and seek input from Reclamation on maintaining the project within the work plan and project goals as stated in this Agreement, and seek Reclamation concurrence for any significant deviation from such work plan and project goals.

(c) Coordinate with Reclamation on technical and administrative aspects of the project through periodic scheduled meetings with Reclamation personnel or periodic written updates.

(d) Provide Reclamation with its reasoning, in writing, when the Recipient chooses not to implement Reclamation's written advice or comments on any technical aspect of fulfilling the requirements of this Agreement.

6.2 Reclamation Responsibilities

6.2.1 Substantial involvement between Reclamation and the Recipient is anticipated during the performance of this Agreement. In support of this Agreement, Reclamation will:

(a) Provide financial contribution not to exceed the available funding specified in Section I.3 (Period of Performance and Funds Availability of this Agreement).

(b) Work with the Recipient as necessary to ensure that the Recipient adheres to the specified work plan and meets specified project goals as set forth in this Agreement.

(c) Provide scientific or administrative advice on the development of the project. Such advice will take into consideration factors such as: (1) the scientific complexities of the project; (2) the Recipient's progress in meeting project goals; and (3) the Recipient's ability to meet the proposed time schedule.

6.2.2 Neither provide funds nor award subsequent cooperative agreements to the Recipient for work on the project unless the Recipient is in full compliance with the requirements of the work plan and project goals that are included in this Agreement and has obtained Reclamation concurrence for any deviations therefrom.

7. Budget

7.1 Approved Budget

See Attachment 1

7.2 Cost Sharing Requirement

The Recipient will provide cost-share for this project equal to or greater than 75%.

7.3 Pre-Award Incurrence of Costs

The Recipient shall be entitled to have incurred costs for this Agreement for allowable costs incurred on or after **May 1, 2009,** which if had been incurred after this Agreement was awarded, would have been allowable, allocable, and reasonable under the terms of the Agreement, including the additional terms and conditions of the ***American Recovery and Reinvestment Act of 2009 Public Law 111-5.***

7.4 Allowable Costs (2 CFR Part 225)

Costs incurred for the performance of this Agreement must be allowable, allocable to the project, and reasonable. The following Office of Management and Budget (OMB) Circular, codified within the Code of Federal Regulations (CFR), governs the allowability of costs for Federal financial assistance:

2 CFR Part 225 (OMB Circular A-87), "Cost Principles for State, Local, and Indian Tribal Governments"
Expenditures for the performance of this Agreement must conform to the requirements within this Circular. The Recipient must maintain sufficient documentation to support these expenditures. Questions on the allowability of costs should be directed to the GO responsible for this Agreement.

The Recipient shall not incur costs or obligate funds for any purpose pertaining to operation of the program or activities beyond the expiration date stated in the Agreement. The only costs which are authorized for a period of up to 90 days following the project performance period are those strictly associated with closeout activities for preparation of the final report.

7.5 Changes (43 CFR §12.70)

(a) *General.* Recipients and sub-recipients are permitted to re-budget within the approved direct cost budget to meet unanticipated requirements and may make limited program changes to the approved project. However, unless waived by the awarding agency, certain types of post-award changes in budgets and projects shall require the prior written approval of the awarding agency.
(b) *Relation to cost principles.* The applicable cost principles (see 43 CFR §12.62) contain requirements for prior approval of certain types of costs. Except where waived, those

requirements apply to all grants and sub-grants even if paragraphs (c) through (f) of this section do not.

(c) *Budget changes.*

(1) *Non-construction projects.* Except as stated in other regulations or an award document, Recipients or sub-recipients shall obtain the prior approval of the awarding agency whenever any of the following changes is anticipated under a non-construction award:

(i) Any revision which would result in the need for additional funding.

(ii) Unless waived by the awarding agency, cumulative transfers among direct cost categories, or, if applicable, among separately budgeted programs, projects, functions, or activities which exceed or are expected to exceed ten percent of the current total approved budget, whenever the awarding agency's share exceeds $100,000.

(iii) Transfer of funds allotted for training allowances (i.e., from direct payments to trainees to other expense categories).

(2) *Construction projects.* Recipients and sub-recipients shall obtain prior written approval for any budget revision which would result in the need for additional funds.

(3) *Combined construction and non-construction projects.* When a grant or sub-grant provides funding for both construction and non-construction activities, the recipient or sub-recipient must obtain prior written approval from the awarding agency before making any fund or budget transfer from non-construction to construction or vice versa.

(d) *Programmatic changes.* Recipients or sub-recipients must obtain the prior approval of the awarding agency whenever any of the following actions is anticipated:

(1) Any revision of the scope or objectives of the project (regardless of whether there is an associated budget revision requiring prior approval).

(2) Need to extend the period of availability of funds.

(3) Changes in key persons in cases where specified in an application or a grant award. In research projects, a change in the project director or principal investigator shall always require approval unless waived by the awarding agency.

(4) Under non-construction projects, contracting out, sub-granting (if authorized by law) or otherwise obtaining the services of a third party to perform activities which are central to the purposes of the award, *unless included in the initial funding proposal.* This approval requirement is in addition to the approval requirements of 43 CFR §12.76 but does not apply to the procurement of equipment, supplies, and general support services.

(e) *Additional prior approval requirements.* The awarding agency may not require prior approval for any budget revision which is not described in paragraph (c) of this section.

(f) *Requesting prior approval.*

(1) A request for prior approval of any budget revision will be in the same budget format the recipient used in its application and shall be accompanied by a narrative justification for the proposed revision.

(2) A request for a prior approval under the applicable Federal cost principles (see 43CFR §12.62) may be made by letter.

(3) A request by a sub-recipient for prior approval will be addressed in writing to the recipient. The recipient will promptly review such request and shall approve or disapprove the request in writing. A recipient will not approve any budget or project revision which is inconsistent with the purpose or terms and conditions of the Federal grant to the recipient. If the revision, requested by the sub-recipient would result in a change to the recipient's approved project which requires Federal prior approval, the recipient will obtain the Federal agency's approval before approving the sub-recipient's request.

7.6 Modifications

Any changes to this Agreement shall be made by means of a written modification. Reclamation may make changes to the Agreement by means of a unilateral modification to address administrative matters, such as changes in address, no-cost time extensions, the addition of previously agreed upon funding, or de-obligation of excess funds at the end of the Agreement. Additionally, a unilateral modification may be utilized by Reclamation if it should become necessary to suspend or terminate the Agreement in accordance with 43 CFR § 12.83.

All other changes shall be made by means of a bilateral modification to the Agreement. No oral statement made by any person, or written statement by any person other than the GO, shall be allowed in any manner or degree to modify or otherwise effect the terms of the Agreement. All requests for modification of the Agreement shall be made in writing, provide a full description of the reason for the request, and be sent to the attention of the GO. Any request for project extension shall be made at least 45 days prior to the expiration date of the Agreement or the expiration date of any extension period that may have been previously granted. Any determination to extend the period of performance or to provide follow-on funding for continuation of a project is solely at the discretion of Reclamation.

8. Key Personnel

8.1 Recipient's Key Personnel

The Recipient's Project Manager for this Agreement shall be:

Sonoma County Water Agency
Attn: Ms. Pamela Jeane, Deputy Chief Engineer
404 Aviation Blvd.
Santa Rosa, California 95403
Phone: (707) 521-1864 / Fax: (707) 523-4322
Email: pam@scwa.ca.gov

Changes to Key Personnel require compliance with 43 CFR § 12.70(d)(3).

8.2 Reclamation's Key Personnel

8.2.1 Grants Officer (GO):

Bureau of Reclamation
Attn: Ms. Maria E. Castaneda
2800 Cottage Way, MP-3813
Sacramento, CA 95825
Phone: (916) 978-5148/Fax: (916) 978-5175
Email: mcastaneda@usbr.gov

The GO is the only official with legal delegated authority to represent Reclamation. The GO's responsibilities include, but are not limited to, the following:

(a) Formally obligate Reclamation to expend funds or change the funding level of the Agreement;

(b) Approve through formal modification changes in the scope of work and/or budget;

(c) Approve through formal modification any increase or decrease in the period of performance of the Agreement;

(d) Approve through formal modification changes in any of the expressed terms, conditions, or specifications of the Agreement;
(e) Be responsible for the overall administration, management, and other non-programmatic aspects of the Agreement including, but not limited to, interpretation of financial assistance statutes, regulations, circulars, policies, and terms of the Agreement;
(f) Where applicable, ensures that Reclamation complies with the administrative requirements required by statutes, regulations, circulars, policies, and terms of the Agreement.

8.2.2 Grants Officer Technical Representative (GOTR):

Bureau of Reclamation
Attn: Mr. David White, Project Manager
2800 Cottage Way, MP-700
Sacramento, California 95825
Phone: (916) 651-5074/Fax: (916) 978-5094
Email: dwhite@usbr.gov

The GOTR's authority is limited to technical and programmatic aspects of the Agreement. The GOTR's responsibilities include, but are not limited to, the following:
(a) Assist the Recipient, as necessary, in interpreting and carrying out the scope of work in the Agreement;

(b) Review, and where required, approve Recipient reports and submittals as required by the Agreement;

(c) Where applicable, monitor the Recipient to ensure compliance with the technical requirements of the Agreement;

(d) Where applicable, ensure that Reclamation complies with the technical requirements of the Agreement;

The GOTR does not have the authority to and may not issue any technical assistance which:

(a) Constitutes an assignment of additional work outside the scope of work of the Agreement;

(b) In any manner causes an increase or decrease in the total estimated cost or the time required for performance; or

(c) Changes any of the expressed terms, conditions, or specifications of the Agreement.

9. Reporting Requirements and Distribution

Failure to comply with the reporting requirements contained in this Agreement may be considered a material non-compliance with the terms and conditions of the award. Non compliance may result in withholding of payments pending receipt of required reports, denying both the use of funds and matching credit for all or part of the cost of the activity or action not in compliance, whole or partial suspension or termination of the Agreement, recovery of funds paid under the Agreement, withholding of future awards, or other legal remedies (43 CFR § 12.83).

9.1.1 Reporting and Registration Requirements under Section 1512 of the American Recovery and Reinvestment Act of 2009, Public Law 111-5 (2 CFR §176.50)

(a) This award requires the Recipient to complete projects or activities which are funded under the American Recovery and Reinvestment Act of 2009 ("Recovery Act") and to report on use of Recovery Act funds provided through this award. Information from these reports will be made available to the public.

(b) The reports are due no later than ten calendar days after each calendar quarter in which the Recipient receives the assistance award funded in whole or in part by the Recovery Act.

(c) Recipients and their first-tier Recipients must maintain current registrations in the Central Contractor Registration (www.ccr.gov) at all times during which they have active federal awards funded with Recovery Act funds. A Dun and Bradstreet Data Universal Numbering System (DUNS) Number (www.dnb.com) is one of the requirements for registration in the Central Contractor Registration.

(d) The Recipient shall report the information described in section 1512(c) using the reporting instructions and data elements that will be provided online at www.FederalReporting.gov and

ensure that any information that is pre-filled is corrected or updated as needed.

9.1.2 Non-compliance. Non-compliance with the required ARRA reporting requirements above will result in withholding of payments pending receipt of the required reports. Repeated non-compliance with the required ARRA reporting requirements stated above will result in Reclamation taking appropriate enforcement or termination actions in accordance with 43 CFR § 12.83 (See Section III.8 and Section III.9 of this Agreement)..

9.2 Financial Reports. Financial Status Reports shall be submitted by means of the SF-425 and shall be submitted according to the Report Frequency and Distribution schedule below. All financial reports shall be signed by an Authorized Certifying Official for the Recipient's organization. The SF-425 is available at http://www.whitehouse.gov/omb/grants/grants_forms.html.

9.3 Monitoring and reporting program performance (43 CFR §12.80)

(a) *Monitoring by Recipients.* Recipients are responsible for managing the day-to-day operations of grant and sub-grant supported activities. Recipients must monitor grant and sub-grant supported activities to assure compliance with applicable Federal requirements and that performance goals are being achieved. Recipient monitoring must cover each program, function or activity.
(b) *Non-construction performance reports.* The Federal agency may, if it decides that performance information available from subsequent applications contains sufficient information to meet its programmatic needs, require the recipient to submit a performance report only upon expiration or termination of grant support. Unless waived by the Federal agency, this report will be due on the same date as the final Financial Status Report.

(1) Recipients shall submit annual performance reports unless the awarding agency requires quarterly or semi-annual reports. However, performance reports will not be required more frequently than quarterly. Annual reports shall be due 90 days after the grant year, quarterly or semi-annual reports shall be due 30 days after the reporting period. The final performance report will be due 90 days after the expiration or termination of grant support. If a justified request is submitted by a recipient, the Federal agency may extend the due date for any performance report. Additionally, requirements for unnecessary performance reports may be waived by the Federal agency.

(2) Performance reports will contain, for each grant, brief information on the following:

(i) A comparison of actual accomplishments to the objectives established for the period. Where the output of the project can be quantified, a computation of the cost per unit of output may be required if that information will be useful.

(ii) The reasons for slippage if established objectives were not met.

(iii) Additional pertinent information including, when appropriate, analysis and explanation of cost overruns or high unit costs.

(3) Recipients will not be required to submit more than the original and two copies of performance reports.

(4) Recipients will adhere to the standards in this section in prescribing performance reporting requirements for sub-recipients.

(c) *Construction performance reports.* For the most part, on-site technical inspections and certified percentage-of-completion data are relied on heavily by Federal agencies to monitor progress under construction grants and sub-grants. The Federal agency will require additional formal performance reports only when considered necessary, and never more frequently than quarterly.

(d) *Significant developments.* Events may occur between the scheduled-performance reporting dates which have significant impact upon the grant or sub-grant supported activity. In such cases, the recipient must inform the Federal agency as soon as the following types of conditions become known:

(1) Problems, delays, or adverse conditions which will materially impair the ability to meet the objective of the award. This disclosure must include a statement of the action taken, or contemplated, and any assistance needed to resolve the situation.
(2) Favorable developments which enable meeting time schedules and objectives sooner or at less cost than anticipated or producing more beneficial results than originally planned.

(e) Federal agencies may make site visits as warranted by program needs.

(f) *Waivers, extensions.*

(1) Federal agencies may waive any performance report required by this part if not needed.

(2) The recipient may waive any performance report from a sub-recipient when not needed. The recipient may extend the due date for any performance report from a sub-recipient if the recipient will still be able to meet its performance reporting obligations to the Federal agency.

9.4 Report Frequency and Distribution. The following table summarizes the reporting requirements for this Agreement.

REQUIRED REPORTS	Interim Reports	Final Report
Program Performance Report		
Format	Format required within www.FederalReporting.gov.	Format required within www.FederalReporting.gov.
Reporting Frequency	Quarterly	Final Report due upon completion of Agreement's period of performance
Reporting Period	Federal fiscal quarters	Entire period of performance

	ending: December 31, March 31, June 30, September 30	
Due Date	Within 10 days after the end of the Reporting Period	Within 90 days after the completion date of the Agreement
Submit to:	www.FederalReporting.gov; for quarterly reporting before www.FederalReporting.gov is available, submit to both the GO and GOTR for this Agreement.	www.FederalReporting.gov
Financial Status Report		
Format	SF-425	SF-425
Reporting Frequency	Quarterly	Final Report due upon completion of Agreement's period of performance
Reporting Period	Federal fiscal quarters ending: December 31, March 31, June 30, September 30	Entire period of performance
Due Date	Within 30 days after the end of the Reporting Period	Within 90 days after the completion date of the Agreement
Send one original to both:	GO and GOTR	GO and GOTR

10. Regulatory Compliance

The Recipient agrees to comply with, or assist Reclamation in compliance with all regulatory compliance requirements and all applicable state, Federal, and local environmental and cultural and paleontological resource protection laws and regulations as applicable to this project. These may include, but are not limited to, the National Environmental Policy Act (NEPA) including the Council on Environmental Quality and Department of the Interior regulations implementing NEPA, the Clean Water Act, the Endangered Species Act, consultation with potentially affected Tribes, and consultation with the State Historic Preservation Office.

Certain environmental and other associated compliance are Federal responsibilities, and will occur as appropriate. Reclamation will identify the need for, and will complete environmental compliance requirements, including those identified above, pursuant to activities specific to this assisted activity. Environmental and other associated compliance shall be completed prior to the start of this project. As such, notwithstanding any other provision of this Agreement, Reclamation shall not provide any funds to the Recipient for Agreement purposes, and the Recipient shall not begin implementation of the assisted activity described in this Agreement, unless and until Reclamation provides written notice to the Recipient that all applicable

environmental and regulatory compliance analyses and clearances have been completed, and the Recipient may begin implementation of the assisted activity.

11. Reclamation Wage Rate Implementation Requirements

This section serves as Reclamation specific implementation requirements for compliance with Section II.4 of this Agreement, "Wage Rate Requirements - Section 1606 of the Recovery Act (29 CFR §5.5)". The Wage Rate Requirements do not apply to government agencies (such as States or their political subdivisions) where the construction work is performed by the government agency's own employees. Davis-Bacon Act wage rate requirements do apply to contracts issued by government agencies for construction work. Monitoring contractor performance and compliance is the primary responsibility of the Recipient. The Recipient agrees to comply with Section II.4 of this Agreement and the following Reclamation implementation requirements for all construction activities performed with an estimated value that exceeds $2000:

(a) Certified Payrolls. The Recipient will obtain certified payrolls from all contractors and subcontractors performing construction activities in support of this Agreement on a weekly basis. Further, the Recipient shall review a representative sample of the data within these payrolls as well as compare them with the independent inspection interviews conducted on site to ensure that all contractors and subcontractors are in compliance with the Prevailing Wage Rates that are **Attachment 2** of this Agreement. The Recipient shall provide the certified payrolls, the independent inspection documentation, and the documentation of reviews to the GOTR on a monthly basis.

(b) Signage Requirements. The wage determination (including any additional classifications and wage rates conformed) and a Davis-Bacon poster (WH-3121) must be posted at all times by the Recipient at the site of the work in a prominent and accessible place where it can be easily seen.

(c) Independent Inspections. As part of the construction inspection responsibilities of the Recipient, the Recipient is responsible for ensuring that a sampling of interviews with on-site laborers are conducted on at least a weekly basis. This documentation is to be submitted to the GOTR at the same time as the certified payrolls are submitted.

(d) Resolution. Resolution of apparent discrepancies noted between the prevailing wage rates and the certified payrolls is the responsibility of the Recipient, the GOTR, the GO, and the contractor. Documentation of any resolutions must be provided to the GOTR in a timely fashion.

II. STANDARD TERMS AND CONDITIONS FOR FINANCIAL ASSISTANCE AWARDS FUNDED BY THE AMERICAN RECOVERY AND REINVESTMENT ACT OF 2009 (PUB. L. 111-5)

1. Required Use of American Iron, Steel, and Manufactured Goods-Section 1605 of the American Recovery and Reinvestment Act of 2009 (2 CFR §176.140)

(a) Definitions. As used in this award term and condition
"Manufactured good" means a good brought to the construction site for incorporation into the building or work that has been

(1) Processed into a specific form and shape; or

(2) Combined with other raw material to create a material that has different properties than the properties of the individual raw materials.

"Public building" and "public work" means a public building of, and a public work of, a governmental entity (the United States; the District of Columbia; commonwealths, territories, and minor outlying islands of the United States; State and local governments; and multi-State, regional, or interstate entities which have governmental functions). These buildings and works may include, without limitation, bridges, dams, plants, highways, parkways, streets, subways, tunnels, sewers, mains, power lines, pumping stations, heavy generators, railways, airports, terminals, docks, piers, wharves, ways, lighthouses, buoys, jetties, breakwaters, levees, and canals, and the construction, alteration, maintenance, or repair of such buildings and works.

"Steel" means an alloy that includes at least 50 percent iron, between .02 and 2 percent carbon, and may include other elements.

(b) *Domestic preference.*

(1) This award term and condition implements Section 1605 of the Recovery Act (Pub. L. 111-5), by requiring that all iron, steel, and manufactured goods used in the project are produced in the United States except as provided in paragraph (b)(3) and (b)(4) of this term and condition.

(2) This requirement does not apply to the material listed by the Federal Government as follows:

NONE

(3) The award official may add other iron, steel, and/or manufactured goods to the list in paragraph (b)(2) of this term and condition if the Federal government determines that

(i) The cost of the domestic iron, steel, and/or manufactured goods would be unreasonable. The cost of domestic iron, steel, or manufactured goods used in the project is unreasonable when the cumulative cost of such material will increase the cost of the overall project by more than 25 percent;

(ii) The iron, steel, and/or manufactured good is not produced, or manufactured in the United States in sufficient and reasonably available quantities and of a satisfactory quality; or

(iii) The application of the restriction of section 1605 of the Recovery Act would be inconsistent with the public interest.

(c) *Request for determination of inapplicability of Section 1605 of the Recovery Act.*

(1)(i) Any Recipient request to use foreign iron, steel, and/or manufactured goods in accordance with paragraph (b)(3) of this term and condition shall include adequate information for Federal Government evaluation of the request, including

(A) A description of the foreign and domestic iron, steel, and/or manufactured goods;

(B) Unit of measure;

(C) Quantity;

(D) Cost;

(E) Time of delivery or availability;

(F) Location of the project;

(G) Name and address of the proposed supplier; and

(H) A detailed justification of the reason for use of foreign iron, steel, and/or manufactured goods cited in accordance with paragraph (b)(3) of this term and condition.

(ii) A request based on unreasonable cost shall include a reasonable survey of the market and a completed cost comparison table in the format in paragraph (d) of this term and condition.

(iii) The cost of iron, steel, and/or manufactured goods material shall include all delivery costs to the construction site and any applicable duty.

(iv) Any Recipient request for a determination submitted after Recovery Act funds have been obligated for a project for construction, alteration, maintenance, or repair shall explain why the Recipient could not reasonably foresee the need for such determination and could not have requested the determination before the funds were obligated. If the Recipient does not submit a satisfactory explanation, the award official need not make a determination.

(2) If the Federal government determines after funds have been obligated for a project for construction, alteration, maintenance, or repair that an exception to section 1605 of the Recovery Act applies, the award official will amend the award to allow use of the foreign iron, steel, and/or relevant manufactured goods. When the basis for the exception is non-availability or public interest, the amended award shall reflect adjustment of the award amount, redistribution of budgeted funds, and/or other actions taken to cover costs associated with acquiring or using the foreign iron, steel, and/or relevant manufactured goods. When the basis for the exception is the unreasonable cost of the domestic iron, steel, or manufactured goods, the award official shall adjust the award amount or redistribute budgeted funds by at least the differential established in 2 CFR 176.110(a).

(3) Unless the Federal Government determines that an exception to section 1605 of the Recovery Act applies, use of foreign iron, steel, and/or manufactured goods is noncompliant.

(d) Data. To permit evaluation of requests under paragraph (b) of this term and condition based on unreasonable cost, the Recipient shall include the following information and any applicable supporting data based on the survey of suppliers:

FOREIGN AND DOMESTIC ITEMS COST COMPARISON			
Description	Unit of Measure	Quantity	Cost (Dollars)*
Item 1:			
Foreign steel, iron, or manufactured good			
Domestic steel, iron, or manufactured good			
Item 2:			
Foreign steel, iron, or manufactured good			
Domestic steel, iron, or manufactured good			

2. Required Use of American Iron, Steel, and Manufactured Goods (covered under International Agreements)—Section 1605 of the American Recovery and Reinvestment Act of 2009. (2 CFR §176.160)

(a) Definitions. As used in this award term and condition
"Designated country"

(1) A World Trade Organization Government Procurement Agreement country (Aruba, Austria, Belgium, Bulgaria, Canada, Cyprus, Czech Republic, Denmark, Estonia, Finland, France, Germany, Greece, Hong Kong, Hungary, Iceland, Ireland, Israel, Italy, Japan, Korea (Republic of), Latvia, Liechtenstein, Lithuania, Luxembourg, Malta, Netherlands, Norway, Poland, Portugal, Romania, Singapore, Slovak Republic, Slovenia, Spain, Sweden, Switzerland, and United Kingdom;

(2) A Free Trade Agreement (FTA) country (Australia, Bahrain, Canada, Chile, Costa Rica, Dominican Republic, El Salvador, Guatemala, Honduras, Israel, Mexico, Morocco, Nicaragua, Oman, Peru, or Singapore); or

(3) A United States-European Communities Exchange of Letters (May 15, 1995) country: Austria, Belgium, Bulgaria, Cyprus, Czech Republic, Denmark, Estonia, Finland, France, Germany, Greece, Hungary, Ireland, Italy, Latvia, Lithuania, Luxembourg, Malta, Netherlands, Poland, Portugal, Romania, Slovak Republic, Slovenia, Spain, Sweden, and United Kingdom.

"Designated country iron, steel, and/or manufactured goods"

(1) Is wholly the growth, product, or manufacture of a designated country; or

(2) In the case of a manufactured good that consist in whole or in part of materials from another country, has been substantially transformed in a designated country into a new and different manufactured good distinct from the materials from which it was transformed.

"Domestic iron, steel, and/or manufactured goods"

(1) Is wholly the growth, product, or manufacture of the United States; or

(2) In the case of a manufactured good that consists in whole or in part of materials from another country, has been substantially transformed in the United States into a new and different manufactured good distinct from the materials from which it was transformed. There is no requirement with regard to the origin of components or subcomponents in manufactured goods or products, as long as the manufacture of the goods occurs in the United States.

"Foreign iron, steel, and/or manufactured good" means iron, steel and/or manufactured good that is not domestic or designated country iron, steel, and/or manufactured goods.

"Manufactured good" means a good brought to the construction site for incorporation into the building or work that has been

(1) Processed into a specific form and shape; or

(2) Combined with other raw material to create a material that has different properties than the properties of the individual raw materials.

"Public building" and "public work" means a public building of, and a public work of, a governmental entity (the United States; the District of Columbia; commonwealths, territories, and minor outlying islands of the United States; State and local governments; and multi-State, regional, or interstate entities which have governmental functions). These buildings and works may include, without limitation, bridges, dams, plants, highways, parkways, streets, subways, tunnels, sewers, mains, power lines, pumping stations, heavy generators, railways, airports, terminals, docks, piers, wharves, ways, lighthouses, buoys, jetties, breakwaters, levees, and

canals, and the construction, alteration, maintenance, or repair of such buildings and works. "Steel" means an alloy that includes at least 50 percent iron, between .02 and 2 percent carbon, and may include other elements.

(b) *Iron, steel, and manufactured goods.*

(1) This award term and condition implements

(i) Section 1605(a) of the Recovery Act (Pub. L. 111-5), by requiring that all iron, steel, and manufactured goods used in the project are produced in the United States; and

(ii) Section 1605(d), which requires application of the Buy American requirement in a manner consistent with U.S. obligations under international Agreements. The restrictions of section 1605 of the Recovery Act do not apply to designated country iron, steel, and/or manufactured goods. The Buy American requirement in section 1605 shall not be applied where the iron, steel or manufactured goods used in the project are from a Party to an international Agreement that obligates the Recipient to treat the goods and services of that Party the same as domestic goods and services. This obligation shall only apply to projects with an estimated value of $7,443,000 or more.

(2) The Recipient shall use only domestic or designated country iron, steel, and manufactured goods in performing the work funded in whole or part with this award, except as provided in paragraphs (b)(3) and (b)(4) of this term and condition.

(3) The requirement in paragraph (b)(2) of this term and condition does not apply to the iron, steel, and manufactured goods listed by the Federal Government as follows: **NONE**

(4) The award official may add other iron, steel, and manufactured goods to the list in paragraph (b)(3) of this award term and condition if the Federal government determines that

(i) The cost of domestic iron, steel, and/or manufactured goods would be unreasonable. The cost of domestic iron, steel, and/or manufactured goods used in the project is unreasonable when the cumulative cost of such material will increase the overall cost of the project by more than 25 percent;

(ii) The iron, steel, and/or manufactured goods is not produced, or manufactured in the United States in sufficient and reasonably available commercial quantities of a satisfactory quality; or

(iii) The application of the restriction of section 1605 of the Recovery Act would be inconsistent with the public interest.

(c) *Request for determination of inapplicability of section 1605 of the Recovery Act or the Buy American Act.*

(1)(i) Any Recipient request to use foreign iron, steel, and/or manufactured goods in

accordance with paragraph(b)(4) of this term and condition shall include adequate information for Federal Government evaluation of the request, including

(A) A description of the foreign and domestic iron, steel, and/or manufactured goods;

(B) Unit of measure;

(C) Quantity;

(D) Cost;

(E) Time of delivery or availability;

(F) Location of the project;

(G) Name and address of the proposed supplier; and

(H) A detailed justification of the reason for use of foreign iron, steel, and/or manufactured goods cited in accordance with paragraph (b)(4) of this term and condition.

(ii) A request based on unreasonable cost shall include a reasonable survey of the market and a completed cost comparison table in the format in paragraph (d) of this term and condition.

(iii) The cost of iron, steel, or manufactured goods shall include all delivery costs to the construction site and any applicable duty.

(iv) Any Recipient request for a determination submitted after Recovery Act funds have been obligated for a project for construction, alteration, maintenance, or repair shall explain why the Recipient could not reasonably foresee the need for such determination and could not have requested the determination before the funds were obligated. If the Recipient does not submit a satisfactory explanation, the award official need not make a determination.

(2) If the Federal government determines after funds have been obligated for a project for construction, alteration, maintenance, or repair that an exception to section 1605 of the Recovery Act applies, the award official will amend the award to allow use of the foreign iron, steel, and/or relevant manufactured goods. When the basis for the exception is non-availability or public interest, the amended award shall reflect adjustment of the award amount, redistribution of budgeted funds, and/or other appropriate actions taken to cover costs associated with acquiring or using the foreign iron, steel, and/or relevant manufactured goods.. When the basis for the exception is the unreasonable cost of the domestic iron, steel, or manufactured goods, the award official shall adjust the award amount or redistribute budgeted funds, as appropriate, by at least the differential established in 2 CFR 176.110(a).

(3) Unless the Federal Government determines that an exception to the section 1605 of the

Recovery Act applies, use of foreign iron, steel, and/or manufactured goods other than designated country iron, steel, and/or manufactured goods is noncompliant with the applicable Act.

(d) Data. To permit evaluation of requests under paragraph (b) of this term and condition based on unreasonable cost, the applicant shall include the following information and any applicable supporting data based on the survey of suppliers:

FOREIGN AND DOMESTIC ITEMS COST COMPARISON			
Description	Unit of Measure	Quantity	Cost (Dollars)*
Item 1:			
Foreign steel, iron, or manufactured good			
Domestic steel, iron, or manufactured good			
Item 2:			
Foreign steel, iron, or manufactured good			
Domestic steel, iron, or manufactured good			

3. Recovery Act Transactions listed in Schedule of Expenditures of Federal Awards and Recipient Responsibilities for Informing Sub-Recipients. (2 CFR §176.210)

(a) To maximize the transparency and accountability of funds authorized under the Recovery Act as required by Congress and in accordance with OMB A-102 Common Rules provisions, Recipients agree to maintain records that identify adequately the source and application of Recovery Act funds

(b) For Recipients covered by the Single Audit Act Amendments of 1996 and OMB Circular A-133, "Audits of States, Local Governments, and Non-Profit Organizations," Recipients agree to separately identify the expenditures for Federal awards under the Recovery Act on the Schedule of Expenditures of Federal Awards (SEFA) and the Data Collection Form (SF-SAC) required by OMB Circular A-133. This shall be accomplished by identifying expenditures for Federal awards made under Recovery Act separately on the SEFA, and as separate rows under Item 9 of Part III on the SF-SAC by CFDA number, and inclusion of the prefix "ARRA-" in identifying the name of the Federal program on the SEFA and as the first characters in Item 9d of Part III on the SF-SAC.

(c) Recipients agree to separately identify to each sub-recipient, and document at the time of sub-award and at the time of disbursement of funds, the Federal award number, CFDA number, and amount of Recovery Act funds. When a Recipient awards Recovery Act funds for an existing program, the information furnished to sub-recipients shall distinguish the sub-awards of incremental Recovery Act funds from regular sub-awards under the existing program.

(d) Recipients agree to require their sub-recipients to include on their SEFA information to specifically identify Recovery Act funding similar to the requirements for the Recipient SEFA described above. This information is needed to allow the Recipient to properly monitor sub-Recipient expenditure of ARRA funds as well as oversight by the Federal awarding agencies, Offices of Inspector General and the Government Accountability Office

4. Wage Rate Requirements - Section 1606 of the American Recovery and Reinvestment Act of 2009. (29 CFR §5.5)

The Recipient shall comply with the following wage rate requirements. In the context of these provisions of this Agreement, the following terms are held to be equivalent:

"Contracting Officer" and "Grants Officer"

Contract provisions and related matters

(a) Minimum wages.

(1) All laborers and mechanics employed or working upon the site of the work (or under the United States Housing Act of 1937 or under the Housing Act of 1949 in the construction or development of the project), will be paid unconditionally and not less often than once a week, and without subsequent deduction or rebate on any account (except such payroll deductions as are permitted by regulations issued by the Secretary of Labor under the Copeland Act (29 CFR part 3)), the full amount of wages and bona fide fringe benefits (or cash equivalents thereof) due at time of payment computed at rates not less than those contained in the wage determination of the Secretary of Labor which is attached hereto and made a part hereof, regardless of any contractual relationship which may be alleged to exist between the contractor and such laborers and mechanics.

Contributions made or costs reasonably anticipated for bona fide fringe benefits under section 1(b)(2) of the Davis-Bacon Act on behalf of laborers or mechanics are considered wages paid to such laborers or mechanics, subject to the provisions of paragraph (a)(1)(iv) of this section; also, regular contributions made or costs incurred for more than a weekly period (but not less often than quarterly) under plans, funds, or programs which cover the particular weekly period, are deemed to be constructively made or incurred during such weekly period. Such laborers and mechanics shall be paid the appropriate wage rate and fringe benefits on the wage determination for the classification of work actually performed, without regard to skill, except as provided in §5.5(a)(4). Laborers or mechanics performing work in more than one classification may be compensated at the rate specified for each classification for the time actually worked therein: Provided that the employer's payroll records accurately set forth the time spent in each classification in which work is performed. The wage determination (including any additional classification and wage rates conformed under paragraph (a)(1)(ii) of this section) and the Davis-Bacon poster (WH–1321) shall be posted at all times by the contractor and its subcontractors at the site of the work in a prominent and accessible place where it can be easily seen by the workers.

(2) The contracting officer shall require that any class of laborers or mechanics, including helpers, which is not listed in the wage determination and which is to be employed under the contract shall be classified in conformance with the wage determination. The contracting officer shall approve an additional classification and wage rate and fringe benefits therefore only when the following criteria have been met:

(i) The work to be performed by the classification requested is not performed by a classification in the wage determination; and

(ii) The classification is utilized in the area by the construction industry; and

(iii) The proposed wage rate, including any bona fide fringe benefits, bears a reasonable relationship to the wage rates contained in the wage determination.

(A) If the contractor and the laborers and mechanics to be employed in the classification (if known), or their representatives, and the contracting officer agree on the classification and wage rate (including the amount designated for fringe benefits where appropriate), a report of the action taken shall be sent by the contracting officer to the Administrator of the Wage and Hour Division, Employment Standards Administration, U.S. Department of Labor, Washington, DC 20210. The Administrator, or an authorized representative, will approve, modify, or disapprove every additional classification action within 30 days of receipt and so advise the contracting officer or will notify the contracting officer within the 30-day period that additional time is necessary.

(B) In the event the contractor, the laborers or mechanics to be employed in the classification or their representatives, and the contracting officer do not agree on the proposed classification and wage rate (including the amount designated for fringe benefits, where appropriate), the contracting officer shall refer the questions, including the views of all interested parties and the recommendation of the contracting officer, to the Administrator for determination. The Administrator, or an authorized representative, will issue a determination within 30 days of receipt and so advise the contracting officer or will notify the contracting officer within the 30-day period that additional time is necessary.

(C) The wage rate (including fringe benefits where appropriate) determined pursuant to paragraphs (a)(1)(ii) (B) or (C) of this section, shall be paid to all workers performing work in the classification under this contract from the first day on which work is performed in the classification.

(3) Whenever the minimum wage rate prescribed in the contract for a class of laborers or mechanics includes a fringe benefit which is not expressed as an hourly rate, the contractor shall either pay the benefit as stated in the wage determination or shall pay another bona fide fringe benefit or an hourly cash equivalent thereof.

(4) If the contractor does not make payments to a trustee or other third person, the contractor may consider as part of the wages of any laborer or mechanic the amount of any costs reasonably anticipated in providing bona fide fringe benefits under a plan or program, Provided, That the Secretary of Labor has found, upon the written request of the contractor, that the applicable standards of the Davis-Bacon Act have been met. The Secretary of Labor may require the contractor to set aside in a separate account assets for the meeting of obligations under the plan or program.

(i) Withholding. The (Recipient) shall upon its own action or upon written request of an authorized representative of the Department of Labor withhold or cause to be withheld from the contractor under this contract or any other Federal contract with the same prime contractor, or any other federally-assisted contract subject to Davis-Bacon prevailing wage requirements, which is held by the same prime contractor, so much of the accrued payments or advances as may be considered necessary to pay laborers and mechanics, including apprentices, trainees, and helpers, employed by the contractor or any subcontractor the full amount of wages required by the contract. In the event of failure to pay any laborer or mechanic, including any apprentice, trainee, or helper, employed or working on the site of the work (or under the United States Housing Act of 1937 or under the Housing Act of 1949 in the construction or development of the project), all or part of the wages required by the contract, the **Department of the Interior, Bureau of Reclamation (Reclamation)** may, after written notice to the contractor, sponsor, applicant, or owner, take such action as may be necessary to cause the suspension of any further payment, advance, or guarantee of funds until such violations have ceased.

(ii) Payrolls and basic records. (1) Payrolls and basic records relating thereto shall be maintained by the contractor during the course of the work and preserved for a period of three years thereafter for all laborers and mechanics working at the site of the work (or under the United States Housing Act of 1937, or under the Housing Act of 1949, in the construction or development of the project). Such records shall contain the name, address, and social security number of each such worker, his or her correct classification, hourly rates of wages paid (including rates of contributions or costs anticipated for bona fide fringe benefits or cash equivalents thereof of the types described in section 1(b)(2)(B) of the Davis-Bacon Act), daily and weekly number of hours worked, deductions made and actual wages paid. Whenever the Secretary of Labor has found under 29 CFR 5.5(a)(1)(iv) that the wages of any laborer or mechanic include the amount of any costs reasonably anticipated in providing benefits under a plan or program described in section 1(b)(2)(B) of the Davis-Bacon Act, the contractor shall maintain records which show that the commitment to provide such benefits is enforceable, that the plan or program is financially responsible, and that the plan or program has been communicated in writing to the laborers or mechanics affected, and records which show the costs anticipated or the actual cost incurred in providing such benefits. Contractors employing apprentices or trainees under approved programs shall maintain written evidence of the registration of apprenticeship programs and certification of trainee programs, the registration of the apprentices and trainees, and the ratios and wage rates prescribed in the applicable programs.

(5) The contractor shall submit weekly for each week in which any contract work is performed a copy of all payrolls to **Reclamation** if the agency is a party to the contract, but if the agency is not such a party, the contractor will submit the payrolls to the applicant, sponsor, or owner, as the case may be, for transmission to **Reclamation**. The payrolls submitted shall set out accurately and completely all of the information required to be maintained under 29 CFR 5.5(a)(3)(i), except that full social security numbers and home addresses shall not be included on weekly transmittals. Instead the payrolls shall only need to include an individually identifying number for each employee (e.g., the last four digits of the employee's social security number). The required weekly payroll information may be submitted in any form desired. Optional Form WH–347 is available for this purpose from the Wage and Hour Division Web site at http://www.dol.gov/esa/whd/forms/wh347instr.htm or its successor site. The prime contractor is responsible for the submission of copies of payrolls by all subcontractors. Contractors and subcontractors shall maintain the full social security number and current address of each covered worker, and shall provide them upon request to **Reclamation** if the agency is a party to the contract, but if the agency is not such a party, the contractor will submit them to the applicant, sponsor, or owner, as the case may be, for transmission to **Reclamation**, the contractor, or the Wage and Hour Division of the Department of Labor for purposes of an investigation or audit of compliance with prevailing wage requirements. It is not a violation of this section for a prime contractor to require a subcontractor to provide addresses and social security numbers to the prime contractor for its own records, without weekly submission to the sponsoring government agency (or the applicant, sponsor, or owner).

(A) Each payroll submitted shall be accompanied by a "Statement of Compliance," signed by the contractor or subcontractor or his or her agent who pays or supervises the payment of the persons employed under the contract and shall certify the following:

(i) That the payroll for the payroll period contains the information required to be provided under §5.5 (a)(3)(ii) of Regulations, 29 CFR part 5, the appropriate information is being maintained under §5.5 (a)(3)(i) of Regulations, 29 CFR part 5, and that such information is correct and complete;

(ii) That each laborer or mechanic (including each helper, apprentice, and trainee) employed on the contract during the payroll period has been paid the full weekly wages earned, without rebate, either directly or indirectly, and that no deductions have been made either directly or indirectly from the full wages earned, other than permissible deductions as set forth in Regulations, 29 CFR part 3;

(iii) That each laborer or mechanic has been paid not less than the applicable wage rates and fringe benefits or cash equivalents for the classification of work performed, as specified in the applicable wage determination incorporated into the contract.

(iv) The weekly submission of a properly executed certification set forth on the reverse side of Optional Form WH–347 shall satisfy the requirement for submission of the "Statement of Compliance" required by paragraph (a)(3)(ii)(B) of this section.

(v) The falsification of any of the above certifications may subject the contractor or subcontractor to civil or criminal prosecution under section 1001 of title 18 and section 231 of title 31 of the United States Code.

(B) The contractor or subcontractor shall make the records required under paragraph (a)(3)(i) of this section available for inspection, copying, or transcription by authorized representatives of **Reclamation** or the Department of Labor, and shall permit such representatives to interview employees during working hours on the job. If the contractor or subcontractor fails to submit the required records or to make them available, the Federal agency may, after written notice to the contractor, sponsor, applicant, or owner, take such action as may be necessary to cause the suspension of any further payment, advance, or guarantee of funds. Furthermore, failure to submit the required records upon request or to make such records available may be grounds for debarment action pursuant to 29 CFR 5.12.

(i) Apprentices and trainees — (A) Apprentices. Apprentices will be permitted to work at less than the predetermined rate for the work they performed when they are employed pursuant to and individually registered in a bona fide apprenticeship program registered with the U.S. Department of Labor, Employment and Training Administration, Office of Apprenticeship Training, Employer and Labor Services, or with a State Apprenticeship Agency recognized by the Office, or if a person is employed in his or her first 90 days of probationary employment as an apprentice in such an apprenticeship program, who is not individually registered in the program, but who has been certified by the Office of Apprenticeship Training, Employer and Labor Services or a State Apprenticeship Agency (where appropriate) to be eligible for probationary employment as an apprentice. The allowable ratio of apprentices to journeymen on the job site in any craft classification shall not be greater than the ratio permitted to the contractor as to the entire work force under the registered program. Any worker listed on a payroll at an apprentice wage rate, who is not registered or otherwise employed as stated above, shall be paid not less than the applicable wage rate on the wage determination for the classification of work actually performed. In addition, any apprentice performing work on the job site in excess of the ratio permitted under the registered program shall be paid not less than the applicable wage rate on the wage determination for the work actually performed. Where a contractor is performing construction on a project in a locality other than that in which its program is registered, the ratios and wage rates (expressed in percentages of the journeyman's hourly rate) specified in the contractor's or subcontractor's registered program shall be observed. Every apprentice must be paid at not less than the rate specified in the registered program for the apprentice's level of progress, expressed as a percentage of the journeymen hourly rate specified in the applicable wage determination. Apprentices shall be paid fringe benefits in accordance with the provisions of the apprenticeship program. If the apprenticeship program does not specify fringe benefits, apprentices must be paid the full amount of fringe benefits listed on the wage determination for the applicable classification. If the Administrator determines that a different practice prevails for the applicable apprentice classification, fringes shall be paid in accordance with that determination. In the event the Office of Apprenticeship Training, Employer and Labor Services, or a State Apprenticeship Agency recognized by the Office,

withdraws approval of an apprenticeship program, the contractor will no longer be permitted to utilize apprentices at less than the applicable predetermined rate for the work performed until an acceptable program is approved.

(C) Trainees. Except as provided in 29 CFR 5.16, trainees will not be permitted to work at less than the predetermined rate for the work performed unless they are employed pursuant to and individually registered in a program which has received prior approval, evidenced by formal certification by the U.S. Department of Labor, Employment and Training Administration. The ratio of trainees to journeymen on the job site shall not be greater than permitted under the plan approved by the Employment and Training Administration. Every trainee must be paid at not less than the rate specified in the approved program for the trainee's level of progress, expressed as a percentage of the journeyman hourly rate specified in the applicable wage determination. Trainees shall be paid fringe benefits in accordance with the provisions of the trainee program. If the trainee program does not mention fringe benefits, trainees shall be paid the full amount of fringe benefits listed on the wage determination unless the Administrator of the Wage and Hour Division determines that there is an apprenticeship program associated with the corresponding journeyman wage rate on the wage determination which provides for less than full fringe benefits for apprentices. Any employee listed on the payroll at a trainee rate, who is not registered and participating in a training plan approved by the Employment and Training Administration shall be paid not less than the applicable wage rate on the wage determination for the classification of work actually performed. In addition, any trainee performing work on the job site in excess of the ratio permitted under the registered program shall be paid not less than the applicable wage rate on the wage determination for the work actually performed. In the event the Employment and Training Administration withdraws approval of a training program, the contractor will no longer be permitted to utilize trainees at less than the applicable predetermined rate for the work performed until an acceptable program is approved.

(D) Equal employment opportunity. The utilization of apprentices, trainees and journeymen under this part shall be in conformity with the equal employment opportunity requirements of Executive Order 11246, as amended, and 29 CFR Part 30.

(i) Compliance with Copeland Act requirements. The contractor shall comply with the requirements of 29 CFR Part 3, which are incorporated by reference in this contract.

(ii) Subcontracts. The contractor or subcontractor shall insert in any subcontracts the clauses contained in 29 CFR 5.5(a)(1) through (10) and such other clauses as **Reclamation** may by appropriate instructions require, and also a clause requiring the subcontractors to include these clauses in any lower tier subcontracts. The prime contractor shall be responsible for the compliance by any subcontractor or lower tier subcontractor with all the contract clauses in 29 CFR 5.5.

(iii) Contract termination: debarment. A breach of the contract clauses in 29 CFR 5.5 may be grounds for termination of the contract, and for debarment as a contractor and a subcontractor as provided in 29 CFR 5.12.

(iv) Compliance with Davis-Bacon and Related Act requirements. All rulings and interpretations of the Davis-Bacon and Related Acts contained in 29 CFR parts 1, 3, and 5 are herein incorporated by reference in this contract.

(v) Disputes concerning labor standards. Disputes arising out of the labor standards provisions of this contract shall not be subject to the general disputes clause of this contract. Such disputes shall be resolved in accordance with the procedures of the Department of Labor set forth in 29 CFR parts 5, 6, and 7. Disputes within the meaning of this clause include disputes between the contractor (or any of its subcontractors) and the contracting agency, the U.S. Department of Labor, or the employees or their representatives.

(vi) Certification of eligibility. (i) By entering into this contract, the contractor certifies that neither it (nor he or she) nor any person or firm who has an interest in the contractor's firm is a person or firm ineligible to be awarded Government contracts by virtue of section 3(a) of the Davis-Bacon Act or 29 CFR 5.12(a)(1).

(A) No part of this contract shall be subcontracted to any person or firm ineligible for award of a Government contract by virtue of section 3(a) of the Davis-Bacon Act or 29 CFR 5.12(a)(1).

(B) The penalty for making false statements is prescribed in the U.S. Criminal Code, 18 U.S.C. 1001.

5. Section 1511 - Infrastructure Certification. Pursuant to Title XV, Subtitle A, Section 1511 of the American Recovery and Reinvestment Act of 2009 (Public Law 11-5 (Feb. 17, 2009) ("ARRA"), the Recipient hereby certifies that the infrastructure investment funded by ARRA has received the full review and vetting required by law and that the Recipient accepts responsibility that such investment is an appropriate use of taxpayer dollars.

6. Section 1515 – Access of Offices of Inspector General to Certain Records and Employees. Pursuant to subtitle A, Section 1515 of the American Recovery and Reinvestment Act of 2009 (Public Law 111-5 (Feb. 17, 2009) ("ARRA"), any representative of an appropriate inspector general appointed under section 3 or 8G of the Inspector General Act of 1978 (5 U.S.C. App.) is authorized

(1) To examine any records of the recipient, any of its subcontractors or sub-recipients, or any State or local agency administering such contract, that pertain to, and involve transactions relating to, the contract, subcontract, grant, or sub-grant; and

(2) To interview any officer or employee of the contractor, recipient, or agency regarding such transactions.

7. Section 1553 – Protecting State and Local Government and Contractor Whistleblowers.

(a) The Recipient shall post notice of employees rights and remedies for whistleblower protections provided under section 1553 of the American Recovery and Reinvestment Act of 2009 (Public Law 111–5).

(b) The Recipient shall include the substance of this clause including this paragraph (b) in all subcontracts.

(c) The recipient and any sub-recipient awarded funds made available under the ARRA shall promptly refer to the Department of the Interior, Office of the Inspector General, and the GO any credible evidence that a principal, employee, agent, contractor, sub-recipient, subcontractor, or other person has submitted a false claim under the False Claims Act or has committed a criminal or civil violation of laws pertaining to fraud, conflict or interest, bribery, gratuity, or similar misconduct involving those funds. The Department of the Interior, Office of Inspector General can be reached at wwww.doioig.gov or hotline number at (800) 424-5081.

8. Section 1604 – Limit on Funds.

No funding provided through this Agreement will be used to construct physical facilities located upon any casino or other gambling establishment, aquarium, zoo, golf course, or swimming pool or to make physical connections to deliver water directly to any casino or other gambling establishment, aquarium, zoo, golf course, or swimming pool.

III. RECLAMATION STANDARD TERMS AND CONDITIONS - STATES, LOCAL GOVERNMENTS, AND FEDERALLY RECOGNIZED INDIAN TRIBAL GOVERNMENTS

1. Regulations and Guidance

The regulations at 43 CFR, Part 12, Subparts A, C, E, and F, are hereby incorporated by reference as though set forth in full text. The following Office of Management and Budget (OMB) Circulars, as applicable, and as implemented by 43 CFR Part 12, are also incorporated by reference and made a part of this Agreement. Failure of a Recipient to comply with any applicable regulation or circular may be the basis for withholding payments for proper charges made by the Recipient and/or for termination of support. Copies of OMB Circulars are available at http://www.whitehouse.gov/omb/grants/grants_circulars.html. The implementation of the circulars at 43 CFR Part 12 is available at http://www.gpoaccess.gov/ecfr.

1.1 Colleges and Universities that are recipients or sub-recipients shall use the following:

2 CFR Part 220 (Circular A 21), "Cost Principles for Educational Institutions"

Circular A 110, as amended September 30, 1999, "Uniform Administrative Requirements for Grants and Agreements with Institutions of Higher Education, Hospitals, and Other Non-Profit Organizations" (Codification by Department of Interior, 43 CFR Part 12, Subpart F)

31 U.S.C. 7501-7507 (Circular A-133), revised June 27, 2003, "Audits of States, Local Governments, and Non-Profit Organizations"

1.2 State, Local and Tribal Governments that are recipients or sub-recipients shall use the following:

2 CFR Part 225 (Circular A 87), "Cost Principles for State, Local, and Indian Tribal Governments"

43 CFR Part 12, Subpart C (Circular A 102), as amended August 29, 1997, "Grants and Cooperative Agreements with State and Local Governments".

31 U.S.C. 7501-7507 (Circular A-133, revised June 27, 2003, "Audits of States, Local Governments, and Non-Profit Organizations"

1.3 Non-profit Organizations that are recipients or sub-recipients shall use the following:

2 CFR Part 230 (Circular A 122), "Cost Principles for Non-Profit Organizations"

Circular A 110, as amended September 30, 1999, "Uniform Administrative Requirements for Grants and Agreements With Institutions of Higher Education, Hospitals, and Other Non-Profit Organizations" (Codification by Department of Interior, 43 CFR Part 12, Subpart F).

31 U.S.C. 7501-7507 (Circular A-133, revised June 27, 2003, "Audits of States, Local Governments, and Non-Profit Organizations"

1.4 Organizations other than those indicated above that are recipients or sub-recipients shall use the basic principles of OMB Circular A-110 (Codification by Department of Interior, 43 CFR Part 12, Subpart F), and cost principles shall be in accordance with 48 CFR Subpart 31.2, titled "Contracts with Commercial Organizations," which is available at http://www.gpoaccess.gov/ecfr/.

1.5 Additionally, please reference 43 CFR §12.77 for further regulations that cover the award and administration of sub-awards by State governments.

2. Payment

Acceptance of a financial assistance Agreement from Reclamation creates a legal responsibility on the part of the Recipient organization to use the funds and property provided in accordance with the terms and conditions of the Agreement. Reclamation has a reversionary interest in the unused balance of funding and in any funds improperly applied.

2.1 Payment Standards (43 CFR §12.61)

(a) *Scope.* This section prescribes the basic standard and the methods under which a Federal agency will make payments to recipients, and recipients will make payments to sub-recipients and contractors.

(b) *Basic standard.* Methods and procedures for payment shall minimize the time elapsing between the transfer of funds and disbursement by the recipient or sub-recipient, in accordance with Treasury regulations at 31 CFR Part 205.

(c) *Advances.* Recipients and sub-recipients shall be paid in advance, provided they maintain or demonstrate the willingness and ability to maintain procedures to minimize the time elapsing between the transfer of the funds and their disbursement by the recipient or sub-recipient.

(d) *Reimbursement.* Reimbursement shall be the preferred method when the requirements in paragraph (c) of this section are not met. Recipients and sub-recipients may also be paid by reimbursement for any construction grant. Except as otherwise specified in regulation, Federal agencies shall not use the percentage of completion method to pay construction grants. The recipient or sub-recipient may use that method to pay its construction contractor, and if it does, the awarding agency's payments to the recipient or sub-recipient will be based on the recipient's or sub-recipient's actual rate of disbursement.

(e) *Working capital advances.* If a recipient cannot meet the criteria for advance payments described in paragraph (c) of this section, and the Federal agency has determined that reimbursement is not feasible because the recipient lacks sufficient working capital, the awarding agency may provide cash or a working capital advance basis. Under this procedure the awarding agency shall advance cash to the recipient to cover its estimated disbursement needs for an initial period generally geared to the recipient's disbursing cycle. Thereafter, the awarding agency shall reimburse the recipient for its actual cash disbursements. The working capital advance method of payment shall not be used by recipients or sub-recipients if the reason for using such method is the unwillingness or inability of the recipient to provide timely advances to the sub-recipient to meet the sub-recipient's actual cash disbursements.

(f) *Effect of program income, refunds, and audit recoveries on payment.*

(1) Recipients and sub-recipients shall disburse repayments to and interest earned on a revolving fund before requesting additional cash payments for the same activity.

(2) Except as provided in paragraph (f)(1) of this section, Recipients and sub-recipients shall disburse program income, rebates, refunds, contract settlements, audit recoveries and interest earned on such funds before requesting additional cash payments.

(g) *Withholding payments.*

(1) Unless otherwise required by Federal statute, awarding agencies shall not withhold payments for proper charges incurred by recipients or sub-recipients unless—

(i) The recipient or sub-recipient has failed to comply with grant award conditions, or

(ii) The recipient or sub-recipient is indebted to the United States.

(2) Cash withheld for failure to comply with grant award condition, but without suspension of the grant, shall be released to the recipient upon subsequent compliance. When a grant is suspended, payment adjustments will be made in accordance with §12.83(c).

(3) A Federal agency shall not make payment to recipients for amounts that are withheld by recipients or sub-recipients from payment to contractors to assure satisfactory completion of work. Payments shall be made by the Federal agency when the recipients or sub-recipients actually disburse the withheld funds to the contractors or to escrow accounts established to assure satisfactory completion of work.

(h) *Cash depositories.*

(1) Consistent with the national goal of expanding the opportunities for minority business enterprises, recipients and sub-recipients are encouraged to use minority banks (a bank which is owned at least 50 percent by minority group members). A list of minority owned banks can be obtained from the Minority Business Development Agency, Department of Commerce, Washington, DC 20230.

(2) A recipient or sub-recipient shall maintain a separate bank account only when required by Federal-State Agreement.

(i) *Interest earned on advances.* Except for interest earned on advances of funds exempt under the Intergovernmental Cooperation Act (31 U.S.C. 6501 et seq.) and the Indian Self-Determination Act (23 U.S.C. 450), Recipients and sub-recipients shall promptly, but at least quarterly, remit interest earned on advances to the Federal agency. The recipient or sub-recipient may keep interest amounts up to $100 per year for administrative expenses.

2.2 Payment Method

Requesting Payments -- Requests for advance or reimbursement may be made by the following methods:

(1) SF-270, Request for Advance or Reimbursement - Recipients may submit an original and properly certified SF-270 form to the GO. For advance payments, this form may be submitted on a monthly basis, at least two weeks prior to the date on which funds are required, and on the basis of expected disbursements for the succeeding month and the amount of Federal funds already on hand. Requests for reimbursement may be submitted on a monthly basis, or more frequently if authorized by the (GO).

(2) SF-271, Outlay Report and Request for Reimbursement for Construction Programs - The SF-271 shall be used for construction Agreements paid by the reimbursement method, letter of credit, electronic funds transfer, or Treasury check advance, except where the advance is based on periodic requests from the Recipient, in which case the SF-270 shall be used. This request may be submitted on a quarterly basis, but no less frequently than on an annual basis. Recipients may submit an original, properly certified SF-271 form to the GO.

(3) Automated Standard Application for Payments (ASAP) - Recipients may utilize the Department of Treasury ASAP payment system to request advances or reimbursements. ASAP is a Recipient-initiated payment and information system designed to provide a single point of contact for the request and delivery of Federal funds. Further information regarding ASAP may be obtained from the ASAP website at http://www.fms.treas.gov/asap . Upon award, you will be provided with information regarding enrollment in the ASAP system.

Recipients interested in enrolling in the ASAP system, please contact Dee Devillier at 303-445-3461 or Sheri Oren at 303-445-3448.

3. Procurement Standards (43 CFR §12.76)

(a) *States.* When procuring property and services under a grant, a State will follow the same policies and procedures it uses for procurements from its non-Federal funds. The State will ensure that every purchase order or other contract includes any clauses required by Federal statutes and executive orders and their implementing regulations. Other recipients and sub-recipients will follow paragraphs (b) through (i) in this section.

(b) *Procurement standards.*

(1) Recipients and sub-recipients will use their own procurement procedures which reflect applicable State and local laws and regulations, provided that the procurements conform to applicable Federal law and the standards identified in this section.

(2) Recipients and sub-recipients will maintain a contract administration system which ensures that contractors perform in accordance with the terms, conditions, and specifications of their contracts or purchase orders.

(3) Recipients and sub-recipients will maintain a written code of standards of conduct governing the performance of their employees engaged in the award and administration of contracts. No employee, officer or agent of the recipient or sub-recipient shall participate in selection, or in the award or administration of a contract supported by Federal funds if a conflict of interest, real or apparent, would be involved. Such a conflict would arise when:

(i) The employee, officer or agent,

(ii) Any member of his immediate family,

(iii) His or her partner, or

(iv) An organization which employs, or is about to employ, any of the above, has a financial or other interest in the firm selected for award. The recipient's or sub-recipient's officers, employees or agents will neither solicit nor accept gratuities, favors or anything of monetary value from contractors, potential contractors, or parties to sub-agreements. Recipient and sub-recipients may set minimum rules where the financial interest is not substantial or the gift is an unsolicited item of nominal intrinsic value. To the extent permitted by State or local law or regulations, such standards or conduct will provide for penalties, sanctions, or other disciplinary actions for violations of such standards by the recipient's and sub-recipient's officers, employees, or agents, or by contractors or their agents. The awarding agency may in regulation provide additional prohibitions relative to real, apparent, or potential conflicts of interest.

(4) Recipient and sub-recipient procedures will provide for a review of proposed procurements to avoid purchase of unnecessary or duplicative items. Consideration should be given to consolidating or breaking out procurements to obtain a more economical purchase. Where appropriate, an analysis will be made of lease versus purchase alternatives, and any other appropriate analysis to determine the most economical approach.

(5) To foster greater economy and efficiency, recipients and sub-recipients are encouraged to enter into State and local intergovernmental agreements for procurement or use of common goods and services.

(6) Recipients and sub-recipients are encouraged to use Federal excess and surplus property in lieu of purchasing new equipment and property whenever such use is feasible and reduces project costs.

(7) Recipients and sub-recipients are encouraged to use value engineering clauses in contracts for construction projects of sufficient size to offer reasonable opportunities for cost reductions. Value engineering is a systematic and creative analysis of each contract item or task to ensure that its essential function is provided at the overall lower cost.

(8) Recipients and sub-recipients will make awards only to responsible contractors possessing the ability to perform successfully under the terms and conditions of a proposed procurement. Consideration will be given to such matters as contractor integrity, compliance with public policy, record of past performance, and financial and technical resources.

(9) Recipients and sub-recipients will maintain records sufficient to detail the significant history of a procurement. These records will include, but are not necessarily limited to the following: rationale for the method of procurement, selection of contract type, contractor selection or rejection, and the basis for the contract price.

(10) Recipients and sub-recipients will use time and material type contracts only

(i) After a determination that no other contract is suitable, and

(ii) If the contract includes a ceiling price that the contractor exceeds at its own risk.

(11) Recipients and sub-recipients alone will be responsible, in accordance with good administrative practice and sound business judgment, for the settlement of all contractual and administrative issues arising out of procurements. These issues include, but are not limited to source evaluation, protests, disputes, and claims. These standards do not relieve the recipient or sub-recipient of any contractual responsibilities under its contracts. Federal agencies will not substitute their judgment for that of the recipient or sub-recipient unless the matter is primarily a Federal concern. Violations of law will be referred to the local, State, or Federal authority having proper jurisdiction.

(12) Recipients and sub-recipients will have protest procedures to handle and resolve disputes relating to their procurements and shall in all instances disclose information regarding the protest to the awarding agency. A protestor must exhaust all administrative remedies with the recipient and sub-recipient before pursuing a protest with the Federal agency. Reviews of protests by the Federal agency will be limited to:

(i) Violations of Federal law or regulations and the standards of this section (violations of State or local law will be under the jurisdiction of State or local authorities) and

(ii) Violations of the recipient's or sub-recipient's protest procedures for failure to review a complaint or protest. Protests received by the Federal agency other than those specified above will be referred to the recipient or sub-recipient.

(c) *Competition.*

(1) All procurement transactions will be conducted in a manner providing full and open competition consistent with the standards of 43 CFR §12.76. Some of the situations considered to be restrictive of competition include but are not limited to:

(i) Placing unreasonable requirements on firms in order for them to qualify to do business,

(ii) Requiring unnecessary experience and excessive bonding,

(iii) Non-competitive pricing practices between firms or between affiliated companies,

(iv) Non-competitive awards to consultants that are on retainer contracts,

(v) Organizational conflicts of interest,

(vi) Specifying only a "brand name" product instead of allowing "an equal" product to be offered and describing the performance of other relevant requirements of the procurement, and

(vii) Any arbitrary action in the procurement process.

(2) Recipients and sub-recipients will conduct procurements in a manner that prohibits the use of statutorily or administratively imposed in-State or local geographical preferences in the evaluation of bids or proposals, except in those cases where applicable Federal statutes expressly mandate or encourage geographic preference. Nothing in this section preempts State licensing laws. When contracting for architectural and engineering (A/E) services, geographic location may be a selection criteria provided its application leaves an appropriate number of qualified firms, given the nature and size of the project, to compete for the contract.

(3) Recipients will have written selection procedures for procurement transactions. These procedures will ensure that all solicitations:

(i) Incorporate a clear and accurate description of the technical requirements for the material, product, or service to be procured. Such description shall not, in competitive procurements, contain features which unduly restrict competition. The description may include a statement of the qualitative nature of the material, product or service to be procured, and when necessary, shall set forth those minimum essential characteristics and standards to which it must conform if it is to satisfy its intended use. Detailed product specifications should be avoided if at all possible. When it is impractical or uneconomical to make a clear and accurate description of the technical requirements, a "brand name or equal" description may be used as a means to define the performance or other salient requirements of a procurement. The specific features of the named brand which must be met by offerors shall be clearly stated; and

(ii) Identify all requirements which the offerors must fulfill and all other factors to be used in evaluating bids or proposals.

(4) Recipients and sub-recipients will ensure that all prequalified lists of persons, firms, or products which are used in acquiring goods and services are current and include enough qualified sources to ensure maximum open and free competition. Also, recipients and sub-recipients will not preclude potential bidders from qualifying during the solicitation period.

(d) *Methods of procurement to be followed* - (1) *Procurement by small purchase procedures.* Small purchase procedures are those relatively simple and informal procurement methods for securing services, supplies, or other property that do not cost more than the simplified acquisition threshold fixed at 41 U.S.C. 403(11) (currently set at $100,000). If small purchase procedures are used, price or rate quotations shall be obtained from an adequate number of qualified sources.

(2) Procurement by *sealed bids* (formal advertising). Bids are publicly solicited and a firm-fixed-price contract (lump sum or unit price) is awarded to the responsible bidder whose bid, conforming with all the material terms and conditions of the invitation for bids, is the lowest in price. The sealed bid method is the preferred method for procuring construction, if the conditions in 43 CFR §12.76(d)(2)(i) apply.

(i) In order for sealed bidding to be feasible, the following conditions should be present:

(A) A complete, adequate, and realistic specification or purchase description is available;

(B) Two or more responsible bidders are willing and able to compete effectively and for the business; and

(C) The procurement lends itself to a firm fixed price contract and the selection of the successful bidder can be made principally on the basis of price.

(ii) If sealed bids are used, the following requirements apply:

(A) The invitation for bids will be publicly advertised and bids shall be solicited from an adequate number of known suppliers, providing them sufficient time prior to the date set for opening the bids;

(B) The invitation for bids, which will include any specifications and pertinent attachments, shall define the items or services in order for the bidder to properly respond;

(C) All bids will be publicly opened at the time and place prescribed in the invitation for bids;

(D) A firm fixed-price contract award will be made in writing to the lowest responsive and responsible bidder. Where specified in bidding documents, factors such as discounts, transportation cost, and life cycle costs shall be considered in determining which bid is lowest. Payment discounts will only be used to determine the low bid when prior experience indicates that such discounts are usually taken advantage of; and

(E) Any or all bids may be rejected if there is a sound documented reason.

(3) Procurement by *competitive proposals.* The technique of competitive proposals is normally conducted with more than one source submitting an offer, and either a fixed-price

or cost-reimbursement type contract is awarded. It is generally used when conditions are not appropriate for the use of sealed bids. If this method is used, the following requirements apply:

(i) Requests for proposals will be publicized and identify all evaluation factors and their relative importance. Any response to publicized requests for proposals shall be honored to the maximum extent practical;

(ii) Proposals will be solicited from an adequate number of qualified sources;

(iii) Recipients and sub-recipients will have a method for conducting technical evaluations of the proposals received and for selecting awardees;

(iv) Awards will be made to the responsible firm whose proposal is most advantageous to the program, with price and other factors considered; and

(v) Recipients and sub-recipients may use competitive proposal procedures for qualifications-based procurement of architectural/engineering (A/E) professional services whereby competitors' qualifications are evaluated and the most qualified competitor is selected, subject to negotiation of fair and reasonable compensation. The method, where price is not used as a selection factor, can only be used in procurement of A/E professional services. It cannot be used to purchase other types of services though A/E firms are a potential source to perform the proposed effort.

(4) Procurement by *non-competitive proposals* is procurement through solicitation of a proposal from only one source, or after solicitation of a number of sources, competition is determined inadequate.

(i) Procurement by non-competitive proposals may be used only when the award of a contract is infeasible under small purchase procedures, sealed bids or competitive proposals and one of the following circumstances applies:

(A) The item is available only from a single source;

(B) The public exigency or emergency for the requirement will not permit a delay resulting from competitive solicitation;

(C) The awarding agency authorizes non-competitive proposals; or

(D) After solicitation of a number of sources, competition is determined inadequate.

(ii) Cost analysis, i.e., verifying the proposed cost data, the projections of the data, and the evaluation of the specific elements of costs and profits, is required.

(iii) Recipients and sub-recipients may be required to submit the proposed procurement to the awarding agency for pre-award review in accordance with paragraph (g) of this section.

(e) *Contracting with small and minority firms, women's business enterprise and labor surplus area firms.* (1) The recipient and sub-recipient will take all necessary affirmative steps to assure that minority firms, women's business enterprises, and labor surplus area firms are used when possible.

(2) Affirmative steps shall include:

(i) Placing qualified small and minority businesses and women's business enterprises on solicitation lists;

(ii) Assuring that small and minority businesses, and women's business enterprises are solicited whenever they are potential sources;

(iii) Dividing total requirements, when economically feasible, into smaller tasks or quantities to permit maximum participation by small and minority business, and women's business enterprises;

(iv) Establishing delivery schedules, where the requirement permits, which encourage participation by small and minority business, and women's business enterprises;

(v) Using the services and assistance of the Small Business Administration, and the Minority Business Development Agency of the Department of Commerce; and

(vi) Requiring the prime contractor, if subcontracts are to be let, to take the affirmative steps listed in paragraphs (e)(2) (i) through (v) of this section.

(f) *Contract cost and price.*

(1) Recipients and sub-recipients must perform a cost or price analysis in connection with every procurement action including contract modifications. The method and degree of analysis is dependent on the facts surrounding the particular procurement situation, but as a starting point, Recipients must make independent estimates before receiving bids or proposals. A cost analysis must be performed when the offeror is required to submit the elements of his estimated cost, e.g., under professional, consulting, and architectural engineering services contracts. A cost analysis will be necessary when adequate price competition is lacking, and for sole source procurements, including contract modifications or change orders, unless price reasonableness can be established on the basis of a catalog or market price of a commercial product sold in substantial quantities to the general public or based on prices set by law or regulation. A price analysis will be used in all other instances to determine the reasonableness of the proposed contract price.

(2) Recipients and sub-recipients will negotiate profit as a separate element of the price for each contract in which there is no price competition and in all cases where cost analysis is performed. To establish a fair and reasonable profit, consideration will be given to the complexity of the work to be performed, the risk borne by the contractor, the contractor's investment, the amount of subcontracting, the quality of its record of past performance, and industry profit rates in the surrounding geographical area for similar work.

(3) Costs or prices based on estimated costs for contracts under grants will be allowable only to the extent that costs incurred or cost estimates included in negotiated prices are consistent with Federal cost principles (see 43 CFR §12.62). Recipients may reference their own cost principles that comply with the applicable Federal cost principles.

(4) The cost plus a percentage of cost and percentage of construction cost methods of contracting shall not be used.

(g) *Awarding agency review.*

(1) Recipients and sub-recipients must make available, upon request of the awarding agency, technical specifications on proposed procurements where the awarding agency believes such review is needed to ensure that the item and/or service specified is the one being proposed for purchase. This review generally will take place prior to the time the specification is incorporated into a solicitation document. However, if the recipient or sub-recipient desires to have the review accomplished after a solicitation has been developed, the awarding agency may still review the specifications, with such review usually limited to the technical aspects of the proposed purchase.

(2) Recipients and sub-recipients must on request make available for awarding agency pre-award review procurement documents, such as requests for proposals or invitations for bids, independent cost estimates, etc. when:

(i) A recipient's or sub-recipient's procurement procedures or operation fails to comply with the procurement standards in this section; or

(ii) The procurement is expected to exceed the simplified acquisition threshold and is to be awarded without competition or only one bid or offer is received in response to a solicitation; or

(iii) The procurement, which is expected to exceed the simplified acquisition threshold, specifies a "brand name" product; or

(iv) The proposed award is more than the simplified acquisition threshold and is to be awarded to other than the apparent low bidder under a sealed bid procurement; or

(v) A proposed contract modification changes the scope of a contract or increases the contract amount by more than the simplified acquisition threshold.

(3) A recipient or sub-recipient will be exempt from the pre-award review in paragraph (g)(2) of this section if the awarding agency determines that its procurement systems comply with the standards of this section.

(i) A recipient or sub-recipient may request that its procurement system be reviewed by the awarding agency to determine whether its system meets these standards in order for its system to be certified. Generally, these reviews shall occur where there is a continuous high-dollar funding, and third-party contracts are awarded on a regular basis.

(ii) A recipient or sub-recipient may self-certify its procurement system. Such self-certification shall not limit the awarding agency's right to survey the system. Under a self-certification procedure, awarding agencies may wish to rely on written assurances from the recipient or sub-recipient that it is complying with these standards. A recipient or sub-recipient will cite specific procedures, regulations, standards, etc., as being in compliance with these requirements and have its system available for review.

(h) *Bonding requirements.* For construction or facility improvement contracts or subcontracts exceeding the simplified acquisition threshold, the awarding agency may accept the bonding policy and requirements of the recipient or sub-recipient provided the awarding agency has made a determination that the awarding agency's interest is adequately protected. If such a determination has not been made, the minimum requirements shall be as follows:

(1) *A bid guarantee from each bidder equivalent to five percent of the bid price.* The "bid guarantee" shall consist of a firm commitment such as a bid bond, certified check, or other negotiable instrument accompanying a bid as assurance that the bidder will, upon acceptance of his bid, execute such contractual documents as may be required within the time specified.

(2) *A performance bond on the part of the contractor for 100 percent of the contract price.* A "performance bond" is one executed in connection with a contract to secure fulfillment of all the contractor's obligations under such contract.

(3) *A payment bond on the part of the contractor for 100 percent of the contract price.* A "payment bond" is one executed in connection with a contract to assure payment as required by law of all persons supplying labor and material in the execution of the work provided for in the contract.

(i) *Contract provisions.* A recipient's and sub-recipient's contracts must contain provisions in paragraph (i) of this section. Federal agencies are permitted to require changes, remedies, changed conditions, access and records retention, suspension of work, and other clauses approved by the Office of Federal Procurement Policy.

(1) Administrative, contractual, or legal remedies in instances where contractors violate or breach contract terms, and provide for such sanctions and penalties as may be appropriate. (Contracts more than the simplified acquisition threshold)

(2) Termination for cause and for convenience by the recipient or sub-recipient including the manner by which it will be effected and the basis for settlement. (All contracts in excess of $10,000)

(3) Compliance with Executive Order 11246 of September 24, 1965, entitled "Equal Employment Opportunity," as amended by Executive Order 11375 of October 13, 1967, and as supplemented in Department of Labor regulations (41 CFR Chapter 60). (All construction contracts awarded in excess of $10,000 by recipients and their contractors or sub-recipients)

(4) Compliance with the Copeland "Anti-Kickback" Act (18 U.S.C. 874) as supplemented in Department of Labor regulations (29 CFR Part 3). (All contracts and sub-grants for construction or repair)

(5) Compliance with the Davis-Bacon Act (40 U.S.C. 276a to 276a–7) as supplemented by Department of Labor regulations (29 CFR Part 5). (Construction contracts in excess of $2000 awarded by recipients and sub-recipients when required by Federal grant program legislation)

(6) Compliance with Sections 103 and 107 of the Contract Work Hours and Safety Standards Act (40 U.S.C. 327–330) as supplemented by Department of Labor regulations (29 CFR Part 5). (Construction contracts awarded by recipients and sub-recipients in excess of $2000, and in excess of $2500 for other contracts which involve the employment of mechanics or laborers)

(7) Notice of awarding agency requirements and regulations pertaining to reporting.

(8) Notice of awarding agency requirements and regulations pertaining to patent rights with respect to any discovery or invention which arises or is developed in the course of or under such contract.

(9) Awarding agency requirements and regulations pertaining to copyrights and rights in data.

(10) Access by the recipient, the sub-recipient, the Federal grantor agency, the Comptroller General of the United States, or any of their duly authorized representatives to any books, documents, papers, and records of the contractor which are directly pertinent to that specific contract for the purpose of making audit, examination, excerpts, and transcriptions.

(11) Retention of all required records for three years after recipients or sub-recipients make final payments and all other pending matters are closed.

(12) Compliance with all applicable standards, orders, or requirements issued under section 306 of the Clean Air Act (42 U.S.C. 1857(h)), section 508 of the Clean Water Act (33 U.S.C. 1368), Executive Order 11738, and Environmental Protection Agency regulations (40 CFR part 15). (Contracts, subcontracts, and sub-grants of amounts in excess of $100,000)

(13) Mandatory standards and policies relating to energy efficiency which are contained in the State energy conservation plan issued in compliance with the Energy Policy and Conservation Act (Public Law 94–163, 89 Stat. 871).

4. Equipment (43 CFR §12.72)

(a) *Title.* Subject to the obligations and conditions set forth in this section, title to equipment acquired under a grant or sub-grant will vest upon acquisition in the recipient or sub-recipient respectively.

(b) *States.* A State will use, manage, and dispose of equipment acquired under a grant by the State in accordance with State laws and procedures. Other recipients and sub-recipients will follow paragraphs (c) through (e) of this section.

(c) *Use.*

(1) Equipment shall be used by the recipient or sub-recipient in the program or project for which it was acquired as long as needed, whether or not the project or program continues to be supported by Federal funds. When no longer needed for the original program or project, the equipment may be used in other activities currently or previously supported by a Federal agency.

(2) The recipient or sub-recipient shall also make equipment available for use on other projects or programs currently or previously supported by the Federal Government, providing such use will not interfere with the work on the projects or program for which it was originally acquired. First preference for other use shall be given to other programs or projects supported by the awarding agency. User fees should be considered if appropriate.

(3) Notwithstanding the encouragement in 43 CFR §12.65(a) to earn program income, the recipient or sub-recipient must not use equipment acquired with grant funds to provide services for a fee to compete unfairly with private companies that provide equivalent services, unless specifically permitted or contemplated by Federal statute.

(4) When acquiring replacement equipment, the recipient or sub-recipient may use the equipment to be replaced as a trade-in or sell the property and use the proceeds to offset the cost of the replacement property, subject to the approval of the awarding agency.

(d) *Management requirements.* Procedures for managing equipment (including replacement equipment), whether acquired in whole or in part with grant funds, until disposition takes place will, as a minimum, meet the following requirements:

(1) Property records must be maintained that include a description of the property, a serial number or other identification number, the source of property, who holds title, the acquisition date, and cost of the property, percentage of Federal participation in the cost of the property, the location, use and condition of the property, and any ultimate disposition data including the date of disposal and sale price of the property.

(2) A physical inventory of the property must be taken and the results reconciled with the property records at least once every two years.

(3) A control system must be developed to ensure adequate safeguards to prevent loss, damage, or theft of the property. Any loss, damage, or theft shall be investigated.

(4) Adequate maintenance procedures must be developed to keep the property in good condition.

(5) If the recipient or sub-recipient is authorized or required to sell the property, proper sales procedures must be established to ensure the highest possible return.

(e) *Disposition.* When original or replacement equipment acquired under a grant or sub-grant is no longer needed for the original project or program or for other activities currently or previously supported by a Federal agency, disposition of the equipment will be made as follows:

(1) Items of equipment with a current per-unit fair market value of less than $5,000 may be retained, sold or otherwise disposed of with no further obligation to the awarding agency.

(2) Items of equipment with a current per unit fair market value in excess of $5,000 may be retained or sold and the awarding agency shall have a right to an amount calculated by multiplying the current market value or proceeds from sale by the awarding agency's share of the equipment.

(3) In cases where a recipient or sub-recipient fails to take appropriate disposition actions, the awarding agency may direct the recipient or sub-recipient to take excess and disposition actions.

(f) *Federal equipment.* In the event a recipient or sub-recipient is provided Federally-owned equipment:

(1) Title will remain vested in the Federal Government.

(2) Recipients or sub-recipients will manage the equipment in accordance with Federal agency rules and procedures, and submit an annual inventory listing.

(3) When the equipment is no longer needed, the recipient or sub-recipient will request disposition instructions from the Federal agency.

(g) *Right to transfer title.* The Federal awarding agency may reserve the right to transfer title to the Federal Government or a third part named by the awarding agency when such a third party is otherwise eligible under existing statutes. Such transfers shall be subject to the following standards:

(1) The property shall be identified in the grant or otherwise made known to the recipient in writing.

(2) The Federal awarding agency shall issue disposition instruction within 120 calendar days after the end of the Federal support of the project for which it was acquired. If the Federal awarding agency fails to issue disposition instructions within the 120 calendar-day period the recipient shall follow 12.72(e).

(3) When title to equipment is transferred, the recipient shall be paid an amount calculated by applying the percentage of participation in the purchase to the current fair market value of the property.

5. Supplies (43 CFR §12.73)

(a) *Title.* Title to supplies acquired under a grant or sub-grant will vest, upon acquisition, in the recipient or sub-recipient respectively.

(b) *Disposition.* If there is a residual inventory of unused supplies exceeding $5,000 in total aggregate fair market value upon termination or completion of the award, and if the supplies are not needed for any other Federally sponsored programs or projects, the recipient or sub-recipient shall compensate the awarding agency for its share.

6. Inspection

Reclamation has the right to inspect and evaluate the work performed or being performed under this Agreement, and the premises where the work is being performed, at all reasonable times and in a manner that will not unduly delay the work. If Reclamation performs inspection or evaluation on the premises of the recipient or a sub-recipient, the recipient shall furnish and shall require sub-recipients to furnish all reasonable facilities and assistance for the safe and convenient performance of these duties.

7. Audit (31 U.S.C. 7501-7507)

Non-Federal entities that expend $500,000 or more in a year in Federal awards shall have a single or program-specific audit conducted for that year in accordance with the Single Audit Act Amendments of 1996 (31 U.S.C. 7501-7507) and revised OMB Circular A-133, which is available at http://www.whitehouse.gov/omb/grants/grants_circulars.html. Federal awards are defined as Federal financial assistance and Federal cost-reimbursement contracts that non-Federal entities receive directly from Federal awarding agencies or indirectly from pass-through entities. They do not include procurement contracts, under grants or contracts, used to buy goods or services from vendors. Non-Federal entities that expend less than $500,000 a year in Federal awards are exempt from Federal audit requirements for that year, except as noted in A-133, §___.215(a), but records must be available for review or audit by appropriate officials of the Federal agency, pass-through entity, and General Accounting Office (GAO).

Audits shall be made by an independent auditor in accordance with generally accepted government auditing standards covering financial audits. General guidance on the single audit process is included in a pamphlet titled, "Highlights of the Single Audit Process" which is available on the internet at http://www.dot.gov/ost/m60/grant/sincontact.htm. Additional

information on single audits is available from the Federal Audit Clearinghouse at http://harvester.census.gov/sac/.

8. Enforcement (43 CFR §12.83)

(a) *Remedies for non-compliance.* If a recipient or sub-recipient materially fails to comply with any term of an award, whether stated in a Federal statute or regulation, an assurance, in a State plan or application, a notice of award, or elsewhere, the awarding agency may take one or more of the following actions, as appropriate in the circumstances:

(1) Temporarily withhold cash payments pending correction of the deficiency by the recipient or sub-recipient or more severe enforcement action by the awarding agency,

(2) Disallow (that is, deny both use of funds and matching credit for) all or part of the cost of the activity or action not in compliance,

(3) Wholly or partly suspend or terminate the current award for the recipient's or sub-recipient's program,

(4) Withhold further awards for the program, or

(5) Take other remedies that may be legally available.

(b) *Hearings, appeals.* In taking an enforcement action, the awarding agency will provide the recipient or sub-recipient an opportunity for such hearing, appeal, or other administrative proceeding to which the recipient or sub-recipient is entitled under any statute or regulation applicable to the action involved.

(c) *Effects of suspension and termination.* Costs of recipient or sub-recipient resulting from obligations incurred by the recipient or sub-recipient during a suspension or after termination of an award are not allowable unless the awarding agency expressly authorizes them in the notice of suspension or termination or subsequently. Other recipient or sub-recipient costs during suspension or after termination which are necessary and not reasonably avoidable are allowable if:

(1) The costs result from obligations which were properly incurred by the recipient or sub-recipient before the effective date of suspension or termination, are not in anticipation of it, and, in the case of a termination, are non-cancellable, and,

(2) The costs would be allowable if the award were not suspended or expired normally at the end of the funding period in which the termination takes effect.

(d) *Relationship to Debarment and Suspension.* The enforcement remedies identified in this section, including suspension and termination, do not preclude recipient or sub-recipient from being subject to "Debarment and Suspension" under E.O. 12549 (2CFR 29.5.12 and 2 CFR Part 1400, Subpart C).

9. Termination for Convenience (43 CFR §12.84)

Except as provided in 43 CFR §12.83 awards may be terminated in whole or in part only as follows:

(a) By the awarding agency with the consent of the recipient or sub-recipient in which case the two parties shall agree upon the termination conditions, including the effective date and in the case of partial termination, the portion to be terminated, or

(b) By the recipient or sub-recipient upon written notification to the awarding agency, setting forth the reasons for such termination, the effective date, and in the case of partial termination, the portion to be terminated. However, if, in the case of a partial termination, the awarding agency determines that the remaining portion of the award will not accomplish the purposes for which the award was made, the awarding agency may terminate the award in its entirety under either §12.83 or paragraph (a) of this section.

10. Debarment and Suspension (2 CFR Part 1400)

The Department of the Interior regulations at 2 CFR Part 1400—Non-procurement Debarment and Suspension (Non-procurement), which adopt the common rule for the government-wide system of debarment and suspension for non-procurement activities, are hereby incorporated by reference and made a part of this Agreement. By entering into this grant or cooperative Agreement with the Bureau of Reclamation, the Recipient agrees to comply with 2 CFR Part 1400, Subpart C, and agrees to include a similar term or condition in all lower-tier covered transactions. These regulations are available at http://www.gpoaccess.gov/ecfr/.

11. Drug-Free Workplace (43 CFR Part 43)

The Department of the Interior regulations at 43 CFR Part 43—Government-wide Requirements for Drug-Free Workplace (Financial Assistance), which adopt the portion of the Drug-Free Workplace Act of 1988 (41 U.S.C. 701 et seq, as amended) applicable to grants and cooperative Agreements, are hereby incorporated by reference and made a part of this Agreement. By entering into this grant or cooperative Agreement with the Bureau of Reclamation, the Recipient agrees to comply with 43 CFR Part 43, Subpart B, if the Recipient is not an individual, or with 43 CFR Part 43, Subpart C, if the Recipient is an individual. These regulations are available at http://www.gpoaccess.gov/ecfr/.

12. Assurances and Certifications Incorporated by Reference

12.1 The provisions of the Assurances, SF 424B or SF 424D as applicable, executed by the Recipient in connection with this Agreement shall apply with full force and effect to this Agreement. All anti-discrimination and equal opportunity statutes, regulations, and Executive Orders that apply to the expenditure of funds under Federal contracts, grants, and cooperative agreements, loans, and other forms of Federal assistance. The Recipient shall comply with Title VI or the Civil Rights Act of 1964, Title IX of the Education Amendments of 1972, Section 504 of the Rehabilitation Act of 1973, the Age Discrimination Act of 1975, and nay program-specific

statutes with anti-discrimination requirements. The Recipient shall comply with civil rights laws including, but not limited to, the Fair Housing Act, the Fair Credit Reporting Act, the Americans with Disabilities Act, Title VII of the Civil Rights Act of 1964, the Equal Educational Opportunities Act, the Age Discrimination in Employment Act, and the Uniform Relocation Act.

Such Assurances also include, but are not limited to, the promise to comply with all applicable Federal statutes and orders relating to non-discrimination in employment, assistance, and housing; the Hatch Act; Federal wage and hour laws and regulations and work place safety standards; Federal environmental laws and regulations and the Endangered Species Act; and Federal protection of rivers and waterways and historic and archeological preservation.

12.2 When required by 43 CFR Part 18—New Restrictions on Lobbying, Recipients shall complete a Certification Regarding Lobbying form. This certification is incorporated by reference and made a part of this Agreement. These regulations are available at http://www.gpoaccess.gov/ecfr.

13. Covenant against Contingent Fees

The Recipient warrants that no person or agency has been employed or retained to solicit or secure this Agreement upon an Agreement or understanding for a commission, percentage, brokerage, or contingent fee, excepting bona fide employees or bona fide offices established and maintained by the Recipient for the purpose of securing Agreements or business. For breach or violation of this warranty, the Government shall have the right to annul this Agreement without liability or, in its discretion, to deduct from the Agreement amount, or otherwise recover, the full amount of such commission, percentage, brokerage, or contingent fee

14. Trafficking Victims Protection Act of 2000, PL 106-386, as amended (2 CFR §175.15)

(a) To implement the trafficking in persons requirement in section 106(g) of the TVPA, as amended, a Federal awarding agency must include the award term in paragraph (b) of this section in

(1) A grant or cooperative agreement to a private entity, as defined in §175.25(d); and
(2) A grant or cooperative agreement to a State, local government, Indian tribe or foreign public entity, if funding could be provided under the award to a private entity as a sub-recipient.

(b) The award term that an agency must include, as described in paragraph (a) of this section, is:

14.1. Trafficking in persons.

(a) *Provisions applicable to a Recipient that is a private entity.*

(1) You as the recipient, your employees, sub-recipients under this award, and sub-recipients' employees may not

(i) Engage in severe forms of trafficking in persons during the period of time that the award is in effect;

(ii) Procure a commercial sex act during the period of time that the award is in effect; or

(iii) Use forced labor in the performance of the award or sub-awards under the award.

(2) We as the Federal awarding agency may unilaterally terminate this award, without penalty, if you or a sub-recipient that is a private entity

(i) Is determined to have violated a prohibition in paragraph a.1 of this award term; or

(ii) Has an employee who is determined by the agency official authorized to terminate the award to have violated a prohibition in paragraph a.1 of this award term through conduct that is either:

(A) Associated with performance under this award; or

(B) Imputed to you or the sub-recipient using the standards and due process for imputing the conduct of an individual to an organization that are provided in 2 CFR part 180, "OMB Guidelines to Agencies on Government-wide Debarment and Suspension (Non-procurement)," as implemented by our agency at *2 CFR part 1400.*

(b) *Provision applicable to a Recipient other than a private entity.* We as the Federal awarding agency may unilaterally terminate this award, without penalty, if a sub-recipient that is a private entity

(1) Is determined to have violated an applicable prohibition in paragraph a.1 of this award term; or

(2) Has an employee who is determined by the agency official authorized to terminate the award to have violated an applicable prohibition in paragraph a.1 of this award term through conduct that is either:

(i) Associated with performance under this award; or

(ii) Imputed to the sub-recipient using the standards and due process for imputing the conduct of an individual to an organization that are provided in 2 CFR part 180, "OMB Guidelines to Agencies on Government-wide Debarment and Suspension (Non-procurement)," as implemented by our agency at *2 CFR part 1400.*

(c) *Provisions applicable to any Recipient.*

(1) You must inform us immediately of any information you receive from any source alleging a violation of a prohibition in paragraph a.1 of this award term.

(2) Our right to terminate unilaterally that is described in paragraph a.2 or b of this section:

(i) Implements section 106(g) of the Trafficking Victims Protection Act of 2000 (TVPA), as amended (22 U.S.C. 7104(g)), and

(ii) Is in addition to all other remedies for non-compliance that are available to us under this award.

(3) You must include the requirements of paragraph a.1 of this award term in any sub-award you make to a private entity.

(d) *Definitions.* For purposes of this award term:

(1) "Employee" means either:

(i) An individual employed by you or a sub-recipient who is engaged in the performance of the project or program under this award; or

(ii) Another person engaged in the performance of the project or program under this award and not compensated by you including, but not limited to, a volunteer or individual whose services are contributed by a third party as an in-kind contribution toward cost sharing or matching requirements.

(2) "Forced labor" means labor obtained by any of the following methods: the recruitment, harboring, transportation, provision, or obtaining of a person for labor or services, through the use of force, fraud, or coercion for the purpose of subjection to involuntary servitude, peonage, debt bondage, or slavery.

(3) "Private entity":

(i) Means any entity other than a State, local government, Indian tribe, or foreign public entity, as those terms are defined in 2 CFR 175.25.

(ii) Includes:

(A) A nonprofit organization, including any nonprofit institution of higher education, hospital, or tribal organization other than one included in the definition of Indian tribe at 2 CFR 175.25(b).

(B) A for-profit organization.

(4) "Severe forms of trafficking in persons," "commercial sex act," and "coercion" have the meanings given at section 103 of the TVPA, as amended (22 U.S.C. 7102).
(c) An agency may use different letters and numbers to designate the paragraphs of the award term in paragraph (b) of this section, if necessary, to conform the system of paragraph designations with the one used in other terms and conditions in the agency's awards

15. Contracting with Small and Minority Firms and Women's Business Enterprises

It is a national policy to award a fair share of contracts to small and minority business firms. The Department of the Interior is strongly committed to the objectives of this policy and encourages all Recipients of its grants and cooperative agreements to take affirmative steps to ensure such fairness.

15.1 The recipient and sub-recipient shall take all necessary affirmative steps to assure that minority firms, and women's business enterprises are used when possible.

15.2 Affirmative steps shall include:

15.2.1 Placing qualified small and minority businesses and women's business enterprises on solicitation lists;

15.2.2 Assuring that small and minority businesses, and women's business enterprises are solicited whenever they are potential sources;

15.2.3 Dividing total requirements, when economically feasible, into smaller tasks or quantities to permit maximum participation by small and minority business, and women's business enterprises;

15.2.4 Establishing delivery schedules, where the requirement permits, which encourage participation by small and minority business, and women's business enterprises;

15.2.5 Using the services and assistance of the Small Business Administration, and the Minority Business Development Agency of the Department of Commerce as appropriate, and

15.2.6 Requiring the prime contractor, if subcontracts are to be let, to take the affirmative steps listed in C.6.2.1 through C.6.2.5, above.

16. Endorsement of Commercial Products and Services

In accordance with 43 CFR §12.2(d), this provision applies to grants and cooperative agreements whose principal purpose is a partnership where the Recipient contributes resources to promote agency programs, publicize agency activities, assists in fund-raising, or provides assistance to the agency. If the agreement is awarded to a Recipient, other than a State government, a local government, or a federally-recognized Indian tribal government, and the agreement authorizes joint dissemination of information and promotion of activities being supported, the following provision shall be made a term and condition of the award:

Recipient shall not publicize or otherwise circulate, promotional material (such as advertisements, sales brochures, press releases, speeches, still and motion pictures, articles, manuscripts or other publications) which states or implies governmental, Departmental, bureau, or government employee endorsement of a product, service or position which the Recipient represents. No release of information relating to this award may state or imply that the

Government approves of the Recipient's work products, or considers the Recipient's work product to be superior to other products or services.

All information submitted for publication or other public releases of information regarding this project shall carry the following disclaimer:

"The views and conclusions contained in this document are those of the authors and should not be interpreted as representing the opinions or policies of the U.S. Government. Mention of trade names or commercial products does not constitute their endorsement by the U.S. Government."

Recipient must obtain prior Government approval for any public information releases concerning this award which refer to the Department of the Interior or any bureau or employee (by name or title). The specific text, layout photographs, etc., of the proposed release must be submitted with the request for approval.

A Recipient further agrees to include this provision in a sub-award to any sub-recipient, except for a sub-award to a State government, a local government, or to a federally-recognized Indian Tribe.

17. Uniform Relocation Assistance and Real Property Acquisition Policies Act of 1970 (URA) (42 USC § 4601 *et. seq.)*

(a) The Uniform Relocation Assistance Act (URA), 42 U.S.C. § 4601 *et. seq.*, as amended, requires certain assurances for Reclamation funded land acquisition projects conducted by a Recipient that cause the displacement of persons, businesses, or farm operations. Because Reclamation funds only support acquisition of property or interests in property from willing sellers, it is not anticipated that CIAP funds will result in any "displaced persons," as defined under the URA.

(b) However, if Reclamation funds are used for the acquisition of real property that results in displacement, the URA requires Recipients to ensure that reasonable relocation payments and other remedies will be provided to any displaced person. Further, when acquiring real property, Recipients must be guided, to the greatest extent practicable, by the land acquisition policies in 42 U.S.C. § 4651.

(c) Exemptions to the URA and 49 CFR Part 24:

(1) The URA provides for an exemption to the appraisal, review and certification rules for those land acquisitions classified as "voluntary transactions." Such "voluntary transactions" are classified as those that do not involve an exercise of eminent domain authority on behalf of a Recipient, and must meet the conditions specified at 49 CFR § 24.101(b)(1)(i)-(iv).

(2) For any land acquisition undertaken by a Recipient that receives Reclamation funds, but does not have authority to acquire the real property by eminent domain, to be exempt from the requirements of 49 CFR Part 24 the Recipient must:

(i) provide written notification to the owner that it will not acquire the property in the event negotiations fail to result in an amicable agreement, and;

(ii) inform the owner in writing of what it believes to be the market value of the property

(d) Review of Land Acquisition Appraisals. Reclamation reserves the right to review any land appraisal whether or not such review is required under the URA or 49 CFR § 24.104. Such reviews may be conducted by the Department of Interior's Appraisal Services Directorate or a Reclamation authorized designee. When Reclamation determines that a review of the original appraisal is necessary, Reclamation will notify the Recipient and provide an estimated completion date of the initial appraisal review.

ATTACHMENT 1
R10AC20R87

Project Phase	Non-Federal Cost Share	Federal Cost Share	Total Phase Cost
Program Oversight and Administration	$150,000	$50,000	$200,000
Novato South Service Area—Hamilton Field	$4,276,500	$1,425,500	$5,702,000
Novato Central Service Area and Novato North Service Area	$7,912,500	$2,637,500	$10,550,000
Napa-Sonoma Salt Marsh Pipeline	$5,032,893	$1,677,631	$6,710,524
Miliken-Sarco-Tulocay Area Project	$4,612,500	$1,537,500	$6,150,000
Total	$21,984,393	$7,328,131	$29,312,524

General Decision Number: CA100029 12/03/2010 CA29

Superseded General Decision Number: CA20080029

State: California

Construction Types: Building, Heavy (Heavy and Dredging) and Highway

Counties: Alameda, Calaveras, Contra Costa, Fresno, Kings, Madera, Mariposa, Merced, Monterey, San Benito, San Francisco, San Joaquin, San Mateo, Santa Clara, Santa Cruz, Stanislaus and Tuolumne Counties in California.

BUILDING CONSTRUCTION PROJECTS; DREDGING PROJECTS (does not include hopper dredge work); HEAVY CONSTRUCTION PROJECTS (does not include water well drilling); HIGHWAY CONSTRUCTION PROJECTS

Modification Number	Publication Date
0	03/12/2010
1	03/19/2010
2	04/02/2010
3	05/28/2010
4	06/11/2010
5	06/25/2010
6	07/02/2010
7	07/09/2010
8	08/13/2010
9	08/20/2010
10	08/27/2010
11	09/03/2010
12	09/10/2010
13	10/08/2010
14	10/15/2010
15	10/29/2010
16	11/19/2010
17	12/03/2010

ASBE0016-001 01/01/2010

AREA 1: ALAMEDA, CONTRA COSTA, LAKE, MARIN, MENDOCINO, MONTEREY, NAPA, SAN BENITO, SAN FRANCISCO, SAN MATEO, SANTA CLARA, SANTA CRUZ, SOLANO, & SONOMA COUNTIES

AREA 2: ALPINE, AMADOR, BUTTE, CALAVERAS, COLUSA, DEL NORTE, EL DORADO, FRESNO, GLENN, HUMBOLDT, KINGS, LASSEN, MADERA, MARIPOSA, MERCED, MODOC, MONO, NEVADA, PLACER, PLUMAS, SACRAMENTO, SAN JOAQUIN, SHASTA, SIERRA, SISKIYOU, STANISLAU, SUTTER, TEHEMA, TRINITY, TULARE, TUOLUMNE, YOLO, & YUBA COUNTIES

	Rates	Fringes
Asbestos Workers/Insulator (Includes the application of all insulating materials, Protective Coverings, Coatings, and Finishes to all types of mechanical systems)		
Area 1	$ 50.43	16.66
Area 2	$ 39.78	16.66

ASBE0016-004 01/01/2010

	Rates	Fringes
Asbestos Removal worker/hazardous material handler (Includes preparation, wetting, stripping, removal, scrapping, vacuuming, bagging and disposing of all insulation materials from mechanical systems, whether they contain asbestos or not)....	$ 15.18	2.80

BOIL0549-001 01/01/2009

AREA 1: ALAMEDA, CONTRA COSTA, SAN FRANCISCO, SAN MATEO & SANTA CLARA COUNTIES

AREA 2: REMAINING COUNTIES

	Rates	Fringes
BOILERMAKER		
Area 1.....	$ 40.17	22.32
Area 2.....	$ 37.01	22.25

BRCA0003-001 08/01/2008

	Rates	Fringes
MARBLE FINISHER.....	$ 28.02	12.12

BRCA0003-003 08/01/2008

	Rates	Fringes
MARBLE MASON.....	$ 39.22	18.58

BRCA0003-005 05/01/2010

	Rates	Fringes
BRICKLAYER		
(1) Fresno, Kings, Madera, Mariposa, Merced....	$ 32.96	18.59
(7) San Francisco, San Mateo.....	$ 39.10	20.97
(8) Alameda, Contra Costa, San Benito, Santa Clara.....	$ 38.38	19.17
(9) Calaveras, San Joaquin, Stanislaus, Toulumne.....	$ 33.86	18.24
(16) Monterey, Santa Cruz...	$ 34.91	21.42

BRCA0003-008 07/01/2009

	Rates	Fringes
TERRAZZO FINISHER.....	$ 30.25	11.57
TERRAZZO WORKER/SETTER.....	$ 38.93	19.32

BRCA0003-011 04/01/2009

AREA 1: Alameda, Contra Costa, Monterey, San Benito, San Francisco, San Mateo, Santa Clara, Santa Cruz

AREA 2: Calaveras, San Joaquin, Stanislaus, Tuolumne

AREA 3: Fresno, Kings, Madera, Mariposa, Merced

	Rates	Fringes
TILE FINISHER		
Area 1	$ 21.34	10.89
Area 2	$ 21.16	11.02
Area 3	$ 20.85	10.16
Tile Layer		
Area 1	$ 38.51	12.17
Area 2	$ 34.31	12.12
Area 3	$ 29.70	11.46

---

* CARP0022-001 07/01/2010

San Francisco County

	Rates	Fringes
Carpenters		
Bridge Builder/Highway Carpenter	$ 37.50	23.14
Hardwood Floorlayer, Shingler, Power Saw Operator, Steel Scaffold & Steel Shoring Erector, Saw Filer	$ 37.65	23.14
Journeyman Carpenter	$ 37.50	23.14
Millwright	$ 37.60	24.73

CARP0034-001 07/01/2009

	Rates	Fringes
Diver		
Assistant Tender, ROV Tender/Technician	$ 35.75	24.16
Diver standby	$ 40.33	24.16
Diver Tender	$ 39.33	24.16
Diver wet	$ 80.66	24.16
Manifold Operator (mixed gas)	$ 44.33	24.16
Manifold Operator (Standby)	$ 39.33	24.16

DEPTH PAY (Surface Diving):
050 to 100 ft $2.00 per foot
101 to 150 ft $3.00 per foot
151 to 220 ft $4.00 per foot

SATURATION DIVING:
The standby rate shall apply until saturation starts. The saturation diving rate applies when divers are under pressure continuously until work task and decompression are complete. The diver rate shall be paid for all saturation hours.

DIVING IN ENCLOSURES:
Where it is necessary for Divers to enter pipes or tunnels, or other enclosures where there is no vertical ascent, the following premium shall be paid: Distance traveled from entrance 26 feet to 300 feet: $1.00 per foot. When it is necessary for a diver to enter any pipe, tunnel or other enclosure less than 48" in height, the premium will be $1.00 per foot.

WORK IN COMBINATION OF CLASSIFICATIONS:
Employees working in any combination of classifications within the diving crew (except dive supervisor) in a shift are paid in the classification with the highest rate for that shift.

CARP0034-003 07/01/2010

	Rates	Fringes
Piledriver	$ 36.75	24.86

CARP0035-007 07/01/2010

AREA 1: Alameda, Contra Costa, San Francisco, San Mateo, Santa Clara counties

AREA 2: Monterey, San Benito, Santa Cruz Counties

AREA 3: Calaveras, Fresno, Kings, Madera, Mariposa, Merced, San Joaquin, Stanislaus, Tuolumne Counties

	Rates	Fringes
Modular Furniture Installer		
Area 1		
Installer I	$ 22.11	14.98
Installer II	$ 18.68	14.98
Lead Installer	$ 25.56	15.48
Master Installer	$ 29.78	15.48
Area 2		
Installer I	$ 19.46	14.98
Installer II	$ 16.51	14.89
Lead Installer	$ 22.43	15.48
Master Installer	$ 26.06	15.48
Area 3		
Installer I	$ 18.51	14.98
Installer II	$ 15.74	14.98
Lead Installer	$ 21.31	15.48
Master Installer	$ 24.73	15.48

CARP0035-008 08/01/2010

AREA 1: Alameda, Contra Costa, San Francisco, San Mateo, Santa Clara counties

AREA 2: Monterey, San Benito, Santa Cruz Counties

AREA 4: Calaveras, Fresno, Kings, Madera, Mariposa, Merced, San Joaquin, Stanislaus, Tuolumne Counties

	Rates	Fringes
Drywall Installers/Lathers:		

```
     Area 1.....................$ 37.50            22.02
     Area 2.....................$ 31.62            22.02
     Area 4.....................$ 30.77            22.02
Drywall Stocker/Scrapper
     Area 1.....................$ 18.75            12.88
     Area 2.....................$ 15.81            12.88
     Area 4.....................$ 15.39            12.88
----------------------------------------------------------------
* CARP0152-001 07/01/2010

Contra Costa County

                                  Rates          Fringes

Carpenters
     Bridge Builder/Highway
     Carpenter..................$ 37.50            23.14
     Hardwood Floorlayer,
     Shingler, Power Saw
     Operator, Steel Scaffold &
     Steel Shoring Erector, Saw
     Filer......................$ 37.65            23.14
     Journeyman Carpenter.......$ 37.50            23.14
     Millwright.................$ 37.60            24.73
----------------------------------------------------------------
* CARP0152-002 07/01/2010

San Joaquin County

                                  Rates          Fringes

Carpenters
     Bridge Builder/Highway
     Carpenter..................$ 37.50            23.14
     Hardwood Floorlayer,
     Shingler, Power Saw
     Operator, Steel Scaffold &
     Steel Shoring Erector, Saw
     Filer......................$ 31.32            23.14
     Journeyman Carpenter.......$ 31.17            23.14
     Millwright.................$ 33.67            24.73
----------------------------------------------------------------
* CARP0152-004 07/01/2010

Calaveras, Mariposa, Merced, Stanislaus and Tuolumne Counties

                                  Rates          Fringes

Carpenters
     Bridge Builder/Highway
     Carpenter..................$ 37.50            23.14
     Hardwood Floorlayer,
     Shingler, Power Saw
     Operator, Steel Scaffold &
     Steel Shoring Erector, Saw
     Filer......................$ 30.42            23.14
     Journeyman Carpenter.......$ 30.27            23.14
     Millwright.................$ 32.77            24.73
----------------------------------------------------------------
* CARP0217-001 07/01/2010

San Mateo County

                                  Rates          Fringes
```

```
Carpenters
     Bridge Builder/Highway
     Carpenter...................$ 37.50            23.14
     Hardwood Floorlayer,
     Shingler, Power Saw
     Operator, Steel Scaffold &
     Steel Shoring Erector, Saw
     Filer.......................$ 37.65            23.14
     Journeyman Carpenter........$ 37.50            23.14
     Millwright..................$ 37.60            24.73
----------------------------------------------------------------
* CARP0405-001 07/01/2010

Santa Clara County

                                  Rates          Fringes

Carpenters
     Bridge Builder/Highway
     Carpenter...................$ 37.50            23.14
     Hardwood Floorlayer,
     Shingler, Power Saw
     Operator, Steel Scaffold &
     Steel Shoring Erector, Saw
     Filer.......................$ 37.65            23.14
     Journeyman Carpenter........$ 37.50            23.14
     Millwright..................$ 37.60            24.73
----------------------------------------------------------------
* CARP0405-002 07/01/2010

San Benito County

                                  Rates          Fringes

Carpenters
     Bridge Builder/Highway
     Carpenter...................$ 37.50            23.14
     Hardwood Floorlayer,
     Shingler, Power Saw
     Operator, Steel Scaffold &
     Steel Shoring Erector, Saw
     Filer.......................$ 31.77            23.14
     Journeyman Carpenter........$ 31.62            23.14
     Millwright..................$ 34.12            24.73
----------------------------------------------------------------
* CARP0505-001 07/01/2010

Santa Cruz County

                                  Rates          Fringes

Carpenters
     Bridge Builder/Highway
     Carpenter...................$ 37.50            23.14
     Hardwood Floorlayer,
     Shingler, Power Saw
     Operator, Steel Scaffold &
     Steel Shoring Erector, Saw
     Filer.......................$ 31.77            23.14
     Journeyman Carpenter........$ 31.62            23.14
     Millwright..................$ 34.12            24.73
----------------------------------------------------------------
* CARP0605-001 07/01/2010

Monterey County
```

```
                                  Rates          Fringes

Carpenters
     Bridge Builder/Highway
     Carpenter...................$ 37.50           23.14
     Hardwood Floorlayer,
     Shingler, Power Saw
     Operator, Steel Scaffold &
     Steel Shoring Erector, Saw
     Filer.......................$ 31.77           23.14
     Journeyman Carpenter........$ 31.62           23.14
     Millwright..................$ 34.12           24.73
----------------------------------------------------------------
* CARP0701-001 07/01/2010

Fresno and Madera Counties

                                  Rates          Fringes

Carpenters
     Bridge Builder/Highway
     Carpenter...................$ 37.50           23.14
     Hardwood Floorlayer,
     Shingler, Power Saw
     Operator, Steel Scaffold &
     Steel Shoring Erector, Saw
     Filer.......................$ 30.42           23.14
     Journeyman Carpenter........$ 30.27           23.14
     Millwright..................$ 32.77           24.73
----------------------------------------------------------------
* CARP0713-001 07/01/2010

Alameda County

                                  Rates          Fringes

Carpenters
     Bridge Builder/Highway
     Carpenter...................$ 37.50           23.14
     Hardwood Floorlayer,
     Shingler, Power Saw
     Operator, Steel Scaffold &
     Steel Shoring Erector, Saw
     Filer.......................$ 37.65           23.14
     Journeyman Carpenter........$ 37.50           23.14
     Millwright..................$ 37.60           24.73
----------------------------------------------------------------
* CARP1109-001 07/01/2010

Kings County

                                  Rates          Fringes

Carpenters
     Bridge Builder/Highway
     Carpenter...................$ 37.50           23.14
     Hardwood Floorlayer,
     Shingler, Power Saw
     Operator, Steel Scaffold &
     Steel Shoring Erector, Saw
     Filer.......................$ 30.42           23.14
     Journeyman Carpenter........$ 30.27           23.14
     Millwright..................$ 32.77           24.73
----------------------------------------------------------------
```

ELEC0006-001 12/01/2008

ALAMEDA, CONTRA COSTA, MONTEREY, SAN BENITO, SAN FRANCISCO, SAN MATEO, SANTA CLARA, AND SANTA CRUZ COUNTIES

	Rates	Fringes
Sound & Communications		
Installer	$ 29.87	3%+11.95
Technician	$ 34.01	3%+11.95

SCOPE OF WORK: Including any data system whose only function is to transmit or receive information; excluding all other data systems or multiple systems which include control function or power supply; inclusion or exclusion of terminations and testings of conductors determined by their function; excluding fire alarm work when installed in raceways (including wire and cable pulling) and when performed on new or major remodel building projects or jobs for which the conductors for the fire alarm system are installed in conduit; excluding installation of raceway systems, line voltage work, industrial work, life-safety systems (all buildings having floors located more than 75' above the lowest floor level having building access); excluding energy management systems.

FOOTNOTE: Fire alarm work when installed in raceways (including wire and cable pulling), on projects which involve new or major remodel building construction, for which the conductors for the fire alarm system are installed in the conduit, shall be performed by the inside electrician.

ELEC0006-007 06/01/2009

SAN FRANCISCO COUNTY

	Rates	Fringes
ELECTRICIAN	$ 53.05	21.685

ELEC0006-008 12/01/2006

CALAVERAS, FRESNO, KINGS, MADERA, MARIPOSA, MERCED, SAN JOAQUIN, STANISLAUS AND TUOLUMNE COUNTIES

	Rates	Fringes
Communications System		
Installer	$ 23.47	3%+10.65
Technician	$ 26.72	3%+10.65

SCOPE OF WORK: Including any data system whose only function is to transmit or receive information; excluding all other data systems or multiple systems which include control function or power supply; inclusion or exclusion of terminations and testings of conductors determined by their function; excluding fire alarm work when installed in raceways (including wire and cable pulling) and when performed on new or major remodel building projects or jobs for which the conductors for the fire alarm system are installed in conduit; excluding installation of raceway systems, line voltage work, industrial work, life-safety

```
  systems (all buildings having floors located more than 75'
  above the lowest floor level having building access);
  excluding energy management systems.

  FOOTNOTE:  Fire alarm work when installed in raceways
  (including wire and cable pulling), on projects which
  involve new or major remodel building construction, for
  which the conductors for the fire alarm system are
  installed in the conduit, shall be performed by the inside
  electrician.
-----------------------------------------------------------------
* ELEC0100-002 12/01/2010

FRESNO, KINGS, AND MADERA COUNTIES

                                  Rates          Fringes

ELECTRICIAN......................$ 32.85         3%+16.25
-----------------------------------------------------------------
 ELEC0100-005 12/01/2009

FRESNO, KINGS, MADERA

                                  Rates          Fringes

Communications System
     Installer...................$ 26.29            12.14
     Technician..................$ 29.93            12.25

SCOPE OF WORK
  Includes the installation testing, service and maintenance,
  of the following systems which utilize the transmission
  and/or transference of voice, sound, vision and digital for
  commercial, education, security and entertainment purposes
  for the following: TV monitoring and surveillance,
  background-foreground music, intercom and telephone
  interconnect, inventory control systems, microwave
  transmission, multi-media, multiplex, nurse call system,
  radio page, school intercom and sound, burglar alarms, and
  low voltage master clock systems.

  A. SOUND AND VOICE TRANSMISSION/TRANSFERENCE SYSTEMS
  Background foreground music, Intercom and telephone
  interconnect systems, Telephone systems Nurse call systems,
  Radio page systems, School intercom and sound systems,
  Burglar alarm systems, Low voltage, master clock systems,
  Multi-media/multiplex systems, Sound and musical
  entertainment systems, RF systems, Antennas and Wave Guide,

B. FIRE ALARM SYSTEMS Installation, wire pulling and testing

  C. TELEVISION AND VIDEO SYSTEMS     Television monitoring and
  surveillance systems  Video security systems, Video
  entertainment systems, Video educational systems, Microwave
  transmission systems, CATV and CCTV

  D. SECURITY SYSTEMS Perimeter security systems Vibration
  sensor systems Card access systems Access control systems,
  Sonar/infrared monitoring equipment

  E. COMMUNICATIONS SYSTEMS THAT TRANSMIT OR RECEIVE
  INFORMATION AND/OR CONTROL SYSTEMS THAT ARE INTRINSIC  TO
  THE ABOVE LISTED SYSTEMS  SCADA (Supervisory Control and
  Data Acquisition)  PCM (Pulse Code Modulation) Inventory
  Control Systems, Digital Data Systems  Broadband and
```

Baseband and Carriers Point of Sale Systems, VSAT Data Systems Data Communication Systems RF and Remote Control Systems, Fiber Optic Data Systems

WORK EXCLUDED Raceway systems are not covered (excluding Ladder-Rack for the purpose of the above listed systems). Chases and/or nipples (not to exceed 10 feet) may be installed on open wiring systems. Energy management systems. SCADA (Supervisory Control and Data Acquisition) when not intrinsic to the above listed systems (in the scope). Fire alarm systems when installed in raceways (including wire and cable pulling) shall be performed at the electrician wage rate, when either of the following two (2) conditions apply:
1. The project involves new or major remodel building trades construction.
2. The conductors for the fire alarm system are installed in conduit.

ELEC0234-001 06/01/2010

MONTEREY, SAN BENITO AND SANTA CRUZ COUNTIES

	Rates	Fringes
ELECTRICIAN	$ 41.20	21.49

ELEC0302-001 06/01/2010

CONTRA COSTA COUNTY

	Rates	Fringes
CABLE SPLICER	$ 52.49	3%+20.15
ELECTRICIAN	$ 46.21	3%+20.15

ELEC0332-001 05/31/2010

SANTA CLARA COUNTY

	Rates	Fringes
CABLE SPLICER	$ 54.71	3%+22.28
ELECTRICIAN	$ 47.57	23.70

FOOTNOTES: Work under compressed air or where gas masks are required, orwork on ladders, scaffolds, stacks, "Bosun's chairs," or other structures and where the workers are not protected by permanent guard rails at a distance of 40 to 60 ft. from the ground or supporting structures: to be paid one and one-half times the straight-time rate of pay. Work on structures of 60 ft. or over (as described above): to be paid twice the straight-time rate of pay.

ELEC0595-001 06/01/2010

ALAMEDA COUNTY

	Rates	Fringes
CABLE SPLICER	$ 50.06	23.67+3%
ELECTRICIAN	$ 44.50	23.67+3%

ELEC0595-002 12/01/2009

CALAVERAS AND SAN JOAQUIN COUNTIES

	Rates	Fringes
CABLE SPLICER	$ 37.13	7.5%+20.04
ELECTRICIAN		
(1) Tunnel work	$ 34.65	7.5%+20.04
(2) All other work	$ 33.00	7.5%+20.04

ELEC0617-001 06/01/2010

SAN MATEO COUNTY

	Rates	Fringes
ELECTRICIAN	$ 50.00	22.33

ELEC0684-001 07/01/2010

MARIPOSA, MERCED, STANISLAUS AND TUOLUMNE COUNTIES

	Rates	Fringes
ELECTRICIAN	$ 34.60	3%+16.90

CABLE SPLICER = 110% of Journeyman Electrician

ELEC1245-001 06/01/2010

	Rates	Fringes
LINE CONSTRUCTION		
(1) Lineman; Cable splicer	$ 46.14	13.41
(2) Equipment specialist (operates crawler tractors, commercial motor vehicles, backhoes, trenchers, cranes (50 tons and below), overhead & underground distribution line equipment)	$ 36.85	12.36
(3) Groundman	$ 28.19	12.10
(4) Powderman	$ 41.20	12.53

HOLIDAYS: New Year's Day, M.L. King Day, Memorial Day, Independence Day, Labor Day, Veterans Day, Thanksgiving Day and day after Thanksgiving, Christmas Day

---

ELEV0008-001 01/01/2010

	Rates	Fringes
ELEVATOR MECHANIC	$ 54.89	20.035

FOOTNOTE:
PAID VACATION: Employer contributes 8% of regular hourly rate as vacation pay credit for employees with more than 5 years of service, and 6% for 6 months to 5 years of service.
PAID HOLIDAYS: New Years Day, Memorial Day, Independence Day, Labor Day, Veterans Day, Thanksgiving Day, Friday after Thanksgiving, and Christmas Day.

ENGI0003-008 07/01/2009

	Rates	Fringes

```
Dredging: (DREDGING:
CLAMSHELL & DIPPER DREDGING;
HYDRAULIC SUCTION DREDGING:)
     AREA 1:
      (1) Leverman...............$ 38.94           22.58
      (2) Dredge Dozer; Heavy
      duty repairman............$ 33.98           22.58
      (3) Booster Pump
      Operator; Deck
      Engineer; Deck mate;
      Dredge Tender; Winch
      Operator..................$ 32.86           22.58
      (4) Bargeman; Deckhand;
      Fireman; Leveehand; Oiler..$ 29.56           22.58
     AREA 2:
      (1) Leverman...............$ 40.94           22.58
      (2) Dredge Dozer; Heavy
      duty repairman............$ 35.98           22.58
      (3) Booster Pump
      Operator; Deck
      Engineer; Deck mate;
      Dredge Tender; Winch
      Operator..................$ 34.86           22.58
      (4) Bargeman; Deckhand;
      Fireman; Leveehand; Oiler..$ 31.56           22.58

AREA DESCRIPTIONS

  AREA 1: ALAMEDA,BUTTE, CONTRA COSTA, KINGS, MARIN, MERCED,
  NAPA, SACRAMENTO, SAN BENITO, SAN FRANCISCO, SAN JOAQUIN,
  SAN MATEO, SANTA CLARA, SANTA CRUZ, SOLANO, STANISLAUS,
  SUTTER, YOLO, AND YUBA COUNTIES

AREA 2:  MODOC COUNTY

  THE REMAINGING COUNTIES ARE SPLIT BETWEEN AREA 1 AND AREA 2
  AS NOTED BELOW:

ALPINE COUNTY:
Area 1:  Northernmost part
Area 2:  Remainder

CALAVERAS COUNTY:
Area 1: Remainder
Area 2: Eastern part

COLUSA COUNTY:
Area 1:  Eastern part
Area 2:  Remainder

ELDORADO COUNTY:
Area 1:  North Central part
Area 2:  Remainder

FRESNO COUNTY:
Area 1: Remainder
Area 2: Eastern part

GLENN COUNTY:
Area 1:  Eastern part
Area 2: Remainder

LASSEN COUNTY:
  Area 1:  Western part along the Southern portion of border
```

```
  with Shasta County
Area 2:  Remainder

MADERA COUNTY:
Area 1: Except Eastern part
Area 2: Eastern part

MARIPOSA COUNTY
Area 1: Except Eastern part
Area 2: Eastern part

MONTERREY COUNTY
Area 1: Except Southwestern part
Area 2: Southwestern part

NEVADA COUNTY:
  Area 1:  All but the Northern portion along the border of
  Sierra County
Area 2:  Remainder

PLACER COUNTY:
Area 1:  Al but the Central portion
Area 2:  Remainder

PLUMAS COUNTY:
Area 1:  Western portion
Area 2:  Remainder

SHASTA COUNTY:
Area 1:  All but the Northeastern corner
Area 2:  Remainder

SIERRA COUNTY:
Area 1:  Western part
Area 2:  Remainder

SISKIYOU COUNTY:
Area 1:  Central part
Area 2:  Remainder

SONOMA COUNTY:
Area 1:  All but the Northwestern corner
Area 2:  Remainder

TEHAMA COUNTY:
  Area 1:  All but the Western border with Mendocino & Trinity
  Counties
Area 2:  Remainder

TRINITY COUNTY:
  Area 1:  East Central part and the Northeastern border with
  Shasta County
Area 2:  Remainder

TUOLUMNE COUNTY:
Area 1: Except Eastern part
Area 2: Eastern part
-----------------------------------------------------------------
 ENGI0003-018 07/01/2010

"AREA 1" WAGE RATES ARE LISTED BELOW

"AREA 2" RECEIVES AN ADDITIONAL $2.00 PER HOUR ABOVE AREA 1
RATES.
```

SEE AREA DEFINITIONS BELOW

	Rates	Fringes
OPERATOR: Power Equipment		
(AREA 1:)		
GROUP 1	$ 37.77	23.00
GROUP 2	$ 36.24	23.00
GROUP 3	$ 34.76	23.00
GROUP 4	$ 33.38	23.00
GROUP 5	$ 32.11	23.00
GROUP 6	$ 30.79	23.00
GROUP 7	$ 29.65	23.00
GROUP 8	$ 28.51	23.00
GROUP 8-A	$ 28.30	23.00
OPERATOR: Power Equipment		
(Cranes and Attachments -		
AREA 1:)		
GROUP 1		
Cranes	$ 38.65	23.00
Oiler	$ 29.39	23.00
Truck crane oiler	$ 31.68	23.00
GROUP 2		
Cranes	$ 36.89	23.00
Oiler	$ 29.18	23.00
Truck crane oiler	$ 31.42	23.00
GROUP 3		
Cranes	$ 35.14	23.00
Hydraulic	$ 30.79	23.00
Oiler	$ 28.90	23.00
Truck Crane Oiler	$ 31.18	23.00
OPERATOR: Power Equipment		
(Piledriving - AREA 1:)		
GROUP 1		
Lifting devices	$ 38.99	23.00
Oiler	$ 29.73	23.00
Truck crane oiler	$ 32.01	23.00
GROUP 2		
Lifting devices	$ 37.17	23.00
Oiler	$ 29.46	23.00
Truck Crane Oiler	$ 31.76	23.00
GROUP 3		
Lifting devices	$ 35.49	23.00
Oiler	$ 29.24	23.00
Truck Crane Oiler	$ 31.47	23.00
GROUP 4	$ 33.72	23.00
GROUP 5	$ 31.08	23.00
GROUP 6	$ 28.85	23.00
OPERATOR: Power Equipment		
(Steel Erection - AREA 1:)		
GROUP 1		
Cranes	$ 39.62	23.00
Oiler	$ 30.07	23.00
Truck Crane Oiler	$ 32.30	23.00
GROUP 2		
Cranes	$ 37.85	23.00
Oiler	$ 29.80	23.00
Truck Crane Oiler	$ 32.08	23.00
GROUP 3		
Cranes	$ 36.37	23.00
Hydraulic	$ 31.42	23.00
Oiler	$ 29.58	23.00
Truck Crane Oiler	$ 31.81	23.00
GROUP 4	$ 34.35	23.00

```
     GROUP 5.....................$ 33.05            23.00
OPERATOR:   Power Equipment
(Tunnel and Underground Work
- AREA 1:)
     SHAFTS, STOPES, RAISES:
      GROUP 1....................$ 33.87            23.00
      GROUP 1-A..................$ 36.34            23.00
      GROUP 2....................$ 32.61            23.00
      GROUP 3....................$ 31.28            23.00
      GROUP 4....................$ 30.14            23.00
      GROUP 5....................$ 29.00            23.00
     UNDERGROUND:
      GROUP 1....................$ 33.77            23.00
      GROUP 1-A..................$ 36.34            23.00
      GROUP 2....................$ 32.51            23.00
      GROUP 3....................$ 31.18            23.00
      GROUP 4....................$ 30.04            23.00
      GROUP 5....................$ 28.90            23.00
```

FOOTNOTE: Work suspended by ropes or cables, or work on a Yo-Yo Cat: $.60 per hour additional.

POWER EQUIPMENT OPERATOR CLASSIFICATIONS

GROUP 1: Operator of helicopter (when used in erection work); Hydraulic excavator, 7 cu. yds. and over; Power shovels, over 7 cu. yds.

GROUP 2: Highline cableway; Hydraulic excavator, 3-1/2 cu. yds. up to 7 cu. yds.; Licensed construction work boat operator, on site; Power blade operator (finish); Power shovels, over 1 cu. yd. up to and including 7 cu. yds. m.r.c.

GROUP 3: Asphalt milling machine; Cable backhoe; Combination backhoe and loader over 3/4 cu. yds.; Continuous flight tie back machine assistant to engineer or mechanic; Crane mounted continuous flight tie back machine, tonnage to apply; Crane mounted drill attachment, tonnage to apply; Dozer, slope brd; Gradall; Hydraulic excavator, up to 3 1/2 cu. yds.; Loader 4 cu. yds. and over; Long reach excavator; Multiple engine scraper (when used as push pull); Power shovels, up to and including 1 cu. yd.; Pre-stress wire wrapping machine; Side boom cat, 572 or larger; Track loader 4 cu. yds. and over; Wheel excavator (up to and including 750 cu. yds. per hour)

GROUP 4: Asphalt plant engineer/box person; Chicago boom; Combination backhoe and loader up to and including 3/4 cu. yd.; Concrete batch plant (wet or dry); Dozer and/or push cat; Pull- type elevating loader; Gradesetter, grade checker (GPS, mechanical or otherwise); Grooving and grinding machine; Heading shield operator; Heavy-duty drilling equipment, Hughes, LDH, Watson 3000 or similar; Heavy-duty repairperson and/or welder; Lime spreader; Loader under 4 cu. yds.; Lubrication and service engineer (mobile and grease rack); Mechanical finishers or spreader machine (asphalt, Barber-Greene and similar); Miller Formless M-9000 slope paver or similar; Portable crushing and screening plants; Power blade support; Roller operator, asphalt; Rubber-tired scraper, self-loading (paddle-wheels, etc.); Rubber- tired earthmoving equipment (scrapers); Slip form paver (concrete); Small tractor with drag; Soil stabilizer (P & H or equal); Spider plow and spider puller;

Tubex pile rig; Unlicensed constuction work boat operator, on site; Timber skidder; Track loader up to 4 yds.; Tractor-drawn scraper; Tractor, compressor drill combination; Welder; Woods-Mixer (and other similar Pugmill equipment)

GROUP 5: Cast-in-place pipe laying machine; Combination slusher and motor operator; Concrete conveyor or concrete pump, truck or equipment mounted; Concrete conveyor, building site; Concrete pump or pumpcrete gun; Drilling equipment, Watson 2000, Texoma 700 or similar; Drilling and boring machinery, horizontal (not to apply to waterliners, wagon drills or jackhammers); Concrete mixer/all; Person and/or material hoist; Mechanical finishers (concrete) (Clary, Johnson, Bidwell Bridge Deck or similar types); Mechanical burm, curb and/or curb and gutter machine, concrete or asphalt); Mine or shaft hoist; Portable crusher; Power jumbo operator (setting slip-forms, etc., in tunnels); Screed (automatic or manual); Self-propelled compactor with dozer; Tractor with boom D6 or smaller; Trenching machine, maximum digging capacity over 5 ft. depth; Vermeer T-600B rock cutter or similar

GROUP 6: Armor-Coater (or similar); Ballast jack tamper; Boom- type backfilling machine; Assistant plant engineer; Bridge and/or gantry crane; Chemical grouting machine, truck-mounted; Chip spreading machine operator; Concrete saw (self-propelled unit on streets, highways, airports and canals); Deck engineer; Drilling equipment Texoma 600, Hughes 200 Series or similar up to and including 30 ft. m.r.c.; Drill doctor; Helicopter radio operator; Hydro-hammer or similar; Line master; Skidsteer loader, Bobcat larger than 743 series or similar (with attachments); Locomotive; Lull hi-lift or similar; Oiler, truck mounted equipment; Pavement breaker, truck-mounted, with compressor combination; Paving fabric installation and/or laying machine; Pipe bending machine (pipelines only); Pipe wrapping machine (tractor propelled and supported); Screed (except asphaltic concrete paving); Self- propelled pipeline wrapping machine; Soils & materials tester; Tractor; Self-loading chipper; Concrete barrier moving machine

GROUP 7: Ballast regulator; Boom truck or dual-purpose A-frame truck, non-rotating - under 15 tons; Truck-mounted rotating telescopic boom type lifting device, Manitex or similar (boom truck) - under 15 tons; Cary lift or similar; Combination slurry mixer and/or cleaner; Drilling equipment, 20 ft. and under m.r.c.; Firetender (hot plant); Grouting machine operator; Highline cableway signalperson; Stationary belt loader (Kolman or similar); Lift slab machine (Vagtborg and similar types); Maginnes internal full slab vibrator; Material hoist (1 drum); Mechanical trench shield; Pavement breaker with or without compressor combination); Pipe cleaning machine (tractor propelled and supported); Post driver; Roller (except asphalt); Chip Seal; Self-propelled automatically applied concrete curing mahcine (on streets, highways, airports and canals); Self-propelled compactor (without dozer); Signalperson; Slip-form pumps (lifting device for concrete forms); Tie spacer; Tower mobile; Trenching machine, maximum digging capacity up to and including 5 ft. depth; Truck- type loader

GROUP 8: Bit sharpener; Boiler tender; Box operator; Brakeperson; Combination mixer and compressor

(shotcrete/gunite); Compressor operator; Deckhand; Fire tender; Forklift (under 20 ft.); Generator; Gunite/shotcrete equipment operator; Hydraulic monitor; Ken seal machine (or similar); Mixermobile; Oiler; Pump operator; Refrigeration plant; Reservoir-debris tug (self-propelled floating); Ross Carrier (construction site); Rotomist operator; Self-propelled tape machine; Shuttlecar; Self-propelled power sweeper operator (includes vacuum sweeper); Slusher operator; Surface heater; Switchperson; Tar pot firetender; Tugger hoist, single drum; Vacuum cooling plant; Welding machine (powered other than by electricity)

GROUP 8-A: Elevator operator; Skidsteer loader-Bobcat 743 series or smaller, and similar (without attachments); Mini excavator under 25 H.P. (backhoe-trencher); Tub grinder wood chipper

---

ALL CRANES AND ATTACHMENTS

GROUP 1: Clamshell and dragline over 7 cu. yds.; Crane, over 100 tons; Derrick, over 100 tons; Derrick barge pedestal-mounted, over 100 tons; Self-propelled boom-type lifting device, over 100 tons

GROUP 2: Clamshell and dragline over 1 cu. yd. up to and including 7 cu. yds.; Crane, over 45 tons up to and including 100 tons; Derrick barge, 100 tons and under; Self-propelled boom-type lifting device, over 45 tons; Tower crane

GROUP 3: Clamshell and dragline up to and including 1 cu. yd.; Cranes 45 tons and under; Self-propelled boom-type lifting device 45 tons and under; Boom Truck or dual purpose A-frame truck, non-rotating over 15 tons; Truck-mounted rotating telescopic boom type lifting device, Manitex or similar (boom truck) over 15 tons;

PILEDRIVERS

GROUP 1: Derrick barge pedestal mounted over 100 tons; Clamshell over 7 cu. yds.; Self-propelled boom-type lifting device over 100 tons; Truck crane or crawler, land or barge mounted over 100 tons

GROUP 2: Derrick barge pedestal mounted 45 tons to and including 100 tons; Clamshell up to and including 7 cu. yds.; Self-propelled boom-type lifting device over 45 tons; Truck crane or crawler, land or barge mounted, over 45 tons up to and including 100 tons; Fundex F-12 hydraulic pile rig

GROUP 3: Derrick barge pedestal mounted under 45 tons; Self-propelled boom-type lifting device 45 tons and under; Skid/scow piledriver, any tonnage; Truck crane or crawler, land or barge mounted 45 tons and under

GROUP 4: Assistant operator in lieu of assistant to engineer; Forklift, 10 tons and over; Heavy-duty repairperson/welder

GROUP 5: Deck engineer

GROUP 6: Deckhand; Fire tender

STEEL ERECTORS

GROUP 1: Crane over 100 tons; Derrick over 100 tons; Self-propelled boom-type lifting device over 100 tons

GROUP 2: Crane over 45 tons to 100 tons; Derrick under 100 tons; Self-propelled boom-type lifting device over 45 tons to 100 tons; Tower crane

GROUP 3: Crane, 45 tons and under; Self-propelled boom-type lifting device, 45 tons and under

GROUP 4: Chicago boom; Forklift, 10 tons and over; Heavy-duty repair person/welder

GROUP 5: Boom cat

TUNNEL AND UNDERGROUND WORK

GROUP 1-A: Tunnel bore machine operator, 20' diameter or more

GROUP 1: Heading shield operator; Heavy-duty repairperson; Mucking machine (rubber tired, rail or track type); Raised bore operator (tunnels); Tunnel mole bore operator

GROUP 2: Combination slusher and motor operator; Concrete pump or pumpcrete gun; Power jumbo operator

GROUP 3: Drill doctor; Mine or shaft hoist

GROUP 4: Combination slurry mixer cleaner; Grouting Machine operator; Motorman

GROUP 5: Bit Sharpener; Brakeman; Combination mixer and compressor (gunite); Compressor operator; Oiler; Pump operator; Slusher operator

---

AREA DESCRIPTIONS:

POWER EQUIPMENT OPERATORS, CRANES AND ATTACHMENTS,TUNNEL AND UNDERGROUND [These areas do not apply to Piledrivers and Steel Erectors]

AREA 1: ALAMEDA, BUTTE, CONTRA COSTA, KINGS, MARIN, MERCED, NAPA, SACRAMENTO, SAN BENITO, SAN FRANCISCO, SAN JOAQUIN, SAN MATEO, SANTA CLARA, SANTA CRUZ, SOLANO, STANISLAUS, SUTTER, YOLO, AND YUBA COUNTIES

AREA 2 - MODOC COUNTY

THE REMAINING COUNTIES ARE SPLIT BETWEEN AREA 1 AND AREA 2 AS NOTED BELOW:

ALPINE COUNTY:
Area 1: Northernmost part
Area 2: Remainder

CALAVERAS COUNTY:
Area 1: Except Eastern part
Area 2: Eastern part

COLUSA COUNTY:
Area 1: Eastern part
Area 2: Remainder

DEL NORTE COUNTY:
Area 1: Extreme Southwestern corner
Area 2: Remainder

ELDORADO COUNTY:
Area 1: North Central part
Area 2: Remainder

FRESNO COUNTY
Area 1: Except Eastern part
Area 2: Eastern part

GLENN COUNTY:
Area 1: Eastern part
Area 2: Remainder

HUMBOLDT COUNTY:
Area 1: Except Eastern and Southwestern parts
Area 2: Remainder

LAKE COUNTY:
Area 1: Southern part
Area 2: Remainder

LASSEN COUNTY:
Area 1: Western part along the Southern portion of border with Shasta County
Area 2: Remainder

MADERA COUNTY
Area 1: Remainder
Area 2: Eastern part

MARIPOSA COUNTY
Area 1: Remainder
Area 2: Eastern part

MENDOCINO COUNTY:
Area 1: Central and Southeastern parts
Area 2: Remainder

MONTEREY COUNTY
Area 1: Remainder
Area 2: Southwestern part

NEVADA COUNTY:
Area 1: All but the Northern portion along the border of Sierra County
Area 2: Remainder

PLACER COUNTY:
Area 1: All but the Central portion
Area 2: Remainder

PLUMAS COUNTY:
Area 1: Western portion

```
Area 2: Remainder

SHASTA COUNTY:
Area 1: All but the Northeastern corner
Area 2: Remainder

SIERRA COUNTY:
Area 1: Western part
Area 2: Remainder

SISKIYOU COUNTY:
Area 1: Central part
Area 2: Remainder

SONOMA COUNTY:
Area 1: All but the Northwestern corner
Area 2: Reaminder

TEHAMA COUNTY:
  Area 1: All but the Western border with mendocino & Trinity
  Counties
Area 2: Remainder

TRINITY COUNTY:
  Area 1: East Central part and the Northeaster border with
  Shasta County
Area 2: Remainder

TULARE COUNTY;
Area 1: Remainder
Area 2: Eastern part

TUOLUMNE COUNTY:
Area 1: Remainder
Area 2: Eastern Part
-----------------------------------------------------------------
 ENGI0003-019 06/29/2009

SEE AREA DESCRIPTIONS BELOW

                                  Rates          Fringes

OPERATOR:   Power Equipment
(LANDSCAPE WORK ONLY)
     GROUP 1
      AREA 1.....................$ 28.64           20.53
      AREA 2.....................$ 30.64           20.53
     GROUP 2
      AREA 1.....................$ 25.04           20.53
      AREA 2.....................$ 27.04           20.53
     GROUP 3
      AREA 1.....................$ 20.43           20.53
      AREA 2.....................$ 22.43           20.53

GROUP DESCRIPTIONS:

  GROUP 1:  Landscape Finish Grade Operator: All finish grade
  work regardless of equipment used, and all equipment with a
  rating more than 65 HP.

  GROUP 2:  Landscape Operator up to 65 HP: All equipment with
  a manufacturer's rating of 65 HP or less except equipment
  covered by Group 1 or Group 3.  The following equipment
  shall be included except when used for finish work as long
  as manufacturer's rating is 65 HP or less: A-Frame and
```

Winch Truck, Backhoe, Forklift, Hydragraphic Seeder Machine, Roller, Rubber-Tired and Track Earthmoving Equipment, Skiploader, Straw Blowers, and Trencher 31 HP up to 65 HP.

GROUP 3: Landscae Utility Operator: Small Rubber-Tired Tractor, Trencher Under 31 HP.

AREA DESCRIPTIONS:

AREA 1: ALAMEDA, BUTTE, CONTRA COSTA, KINGS, MARIN, MERCED, NAPA, SACRAMENTO, SAN BENITO, SAN FRANCISCO, SAN JOAQUIN, SAN MATEO, SANTA CLARA, SANTA CRUZ, SOLANO, STANISLAUS, SUTTER, YOLO, AND YUBA COUNTIES

AREA 2 - MODOC COUNTY

THE REMAINING COUNTIES ARE SPLIT BETWEEN AREA 1 AND AREA 2 AS NOTED BELOW:

ALPINE COUNTY:
Area 1: Northernmost part
Area 2: Remainder

CALAVERAS COUNTY:
Area 1: Except Eastern part
Area 2: Eastern part

COLUSA COUNTY:
Area 1: Eastern part
Area 2: Remainder

DEL NORTE COUNTY:
Area 1: Extreme Southwestern corner
Area 2: Remainder

ELDORADO COUNTY:
Area 1: North Central part
Area 2: Remainder

FRESNO COUNTY
Area 1: Except Eastern part
Area 2: Eastern part

GLENN COUNTY:
Area 1: Eastern part
Area 2: Remainder

HUMBOLDT COUNTY:
Area 1: Except Eastern and Southwestern parts
Area 2: Remainder

LAKE COUNTY:
Area 1: Southern part
Area 2: Remainder

LASSEN COUNTY:
Area 1: Western part along the Southern portion of border with Shasta County
Area 2: Remainder

MADERA COUNTY
Area 1: Remainder
Area 2: Eastern part

```
MARIPOSA COUNTY
Area 1: Remainder
Area 2: Eastern part

MENDOCINO COUNTY:
Area 1: Central and Southeastern parts
Area 2: Remainder

MONTEREY COUNTY
Area 1: Remainder
Area 2: Southwestern part

NEVADA COUNTY:
  Area 1: All but the Northern portion along the border of
  Sierra County
Area 2: Remainder

PLACER COUNTY:
Area 1: All but the Central portion
Area 2: Remainder

PLUMAS COUNTY:
Area 1: Western portion
Area 2: Remainder

SHASTA COUNTY:
Area 1: All but the Northeastern corner
Area 2: Remainder

SIERRA COUNTY:
Area 1: Western part
Area 2: Remainder

SISKIYOU COUNTY:
Area 1: Central part
Area 2: Remainder

SONOMA COUNTY:
Area 1: All but the Northwestern corner
Area 2: Reaminder

TEHAMA COUNTY:
  Area 1: All but the Western border with mendocino & Trinity
  Counties
Area 2: Remainder

TRINITY COUNTY:
  Area 1: East Central part and the Northeaster border with
  Shasta County
Area 2: Remainder

TULARE COUNTY;
Area 1: Remainder
Area 2: Eastern part

TUOLUMNE COUNTY:
Area 1: Remainder
Area 2: Eastern Part
----------------------------------------------------------------
 IRON0002-004 07/01/2010

                                  Rates          Fringes

Ironworkers:
     Fence Erector...............$ 26.58           15.26
```

```
     Ornamental, Reinforcing
     and Structural.............$ 33.00            23.73

PREMIUM PAY:

$6.00 additional per hour at the following locations:

China Lake Naval Test Station, Chocolate Mountains Naval
Reserve-Niland,
Edwards AFB, Fort Irwin Military Station, Fort Irwin Training
Center-Goldstone, San Clemente Island, San Nicholas Island,
Susanville Federal Prison, 29 Palms - Marine Corps, U.S. Marine
Base - Barstow, U.S. Naval Air Facility - Sealey, Vandenberg AFB

$4.00 additional per hour at the following locations:

Army Defense Language Institute - Monterey, Fallon Air Base,
Naval Post Graduate School - Monterey, Yermo Marine Corps
Logistics Center

$2.00 additional per hour at the following locations:

Port Hueneme, Port Mugu, U.S. Coast Guard Station - Two Rock

----------------------------------------------------------------
 LABO0036-001 07/01/2007

SAN FRANCISCO AND SAN MATEO COUNTIES:

                                  Rates          Fringes

MASON TENDER, BRICK.............$ 26.93            16.50

  FOOTNOTES: Underground work such as sewers, manholes, catch
  basins, sewer pipes, telephone conduits, tunnels and cut
  trenches: $5.00 per day additional. Work in live sewage:
  $2.50 per day additional.
----------------------------------------------------------------
 LABO0036-002 07/01/2007

SAN FRANCISCO AND SAN MATEO COUNTIES:

                                  Rates          Fringes

PLASTER TENDER..................$ 26.48            16.23

  FOOTNOTES: Work on a suspended scaffold: $5.00 per day
  additional. Work operating a plaster mixer pump gun: $1.00
  per hour additional.
----------------------------------------------------------------
 LABO0067-002 12/01/2008

AREA "A" - ALAMEDA, CONTRA COSTA, MARIN, SAN FRANCISCO, SAN
MATEO AND SANTA CLARA COUNTIES

AREA "B"  -  ALPINE, AMADOR, BUTTE, CALAVERAS, COLUSA, DEL
NORTE, EL DORADO, FRESNO, GLENN, HUMBOLDT, KINGS, LAKE, LASSEN,
MADERA, MARIPOSA, MENDOCINO, MERCED, MODOC, MONTEREY, NAPA,
NEVADA, PLACER, PLUMAS, SACRAMENTO, SAN BENITO, SAN JOAQUIN,
SANTA CRUZ, SHASTA, SIERRA, SISKIYOU, SOLANO, SONOMA,
STANISLAUS, SUTTER, TEHAMA, TRINITY, TULARE, TUOLUMNE, YOLO AND
YUBA COUNTIES

                                  Rates          Fringes
```

```
Asbestos Removal Laborer
     Areas A & B................$ 18.08            6.60
LABORER (Lead Removal)
     Area A.....................$ 34.15            6.11
     Area B.....................$ 33.15            6.11

  ASBESTOS REMOVAL-SCOPE OF WORK: Site mobilization; initial
  site clean-up; site preparation; removal of
  asbestos-containing materials from walls and ceilings; or
  from pipes, boilers and mechanical systems only if they are
  being scrapped; encapsulation, enclosure and disposal of
  asbestos-containing materials by hand or with equipment or
  machinery; scaffolding; fabrication of temporary wooden
  barriers; and assembly of decontamination stations.
-----------------------------------------------------------------
 LABO0067-003 07/01/2009

AREA A:  ALAMEDA, CONTRA COSTA, MARIN, SAN FRANCISCO, SAN MATEO
& SANTA CLARA

AREA B:  ALPINE, AMADOR, BUTTE, CALAVERAS, COLUSA, DEL NORTE,
EL DORADO, FRESNO, GLENN, HUMBOLDT, KINGS, LAKE, LASSEN,
MADERA, MARIPOSA, MENOCINO, MERCED, MODOC, MONTEREY, NAPA,
NEVADA, PLACER, PLUMAS, SANCRMENTO, SAN BENITO, SAN JOAQUIN,
SANTA CRUZ, SIERRA, SHASTA, SISKIYOU, SOLANO, SONOMA,
STANISLAUS,TEHAMA,TRINITY, TULARE, TUOLUMNE, YOLO & YUBA
COUNTIES


                                  Rates          Fringes

LABORER (TRAFFIC CONTROL/LANE
CLOSURE)
     Escort Driver, Flag Person
      Area A.....................$ 26.89           14.93
      Area B.....................$ 25.89           14.93
     Traffic Control Person I
      Area A.....................$ 27.19           14.93
      Area B.....................$ 26.19           14.93
     Traffic Control Person II
      Area A.....................$ 24.69           14.93
      Area B.....................$ 23.69           14.93

  TRAFFIC CONTROL PERSON I: Layout of traffic control, crash
  cushions, construction area and roadside signage.

  TRAFFIC CONTROL PERSON II: Installation and removal of
  temporary/permanent signs, markers, delineators and crash
  cushions.
-----------------------------------------------------------------
 LABO0067-006 06/28/2010

AREA "A" - ALAMEDA, CONTRA COSTA, MARIN, SAN FRANCISCO, SAN
MATEO AND SANTA CLARA COUNTIES

AREA "B"  -  ALPINE, AMADOR, BUTTE, CALAVERAS, COLUSA, EL
DORADO, FRESNO, GLENN, KINGS, LASSEN, MADERA, MARIPOSA, MERCED,
MODOC, MONTEREY, NAPA, NEVADA, PLACER, PLUMAS, SACRAMENTO, SAN
BENITO, SAN JOAQUIN, SANTA CRUZ, SHASTA, SIERRA, SISKIYOU,
SOLANO, SONOMA, STANISLAUS, SUTTER, TEHAMA, TRINITY, TULARE,
TUOLUMNE, YOLO AND YUBA COUNTIES


                                  Rates          Fringes
```

```
Laborers: (CONSTRUCTION CRAFT
LABORERS - AREA A:)
     Construction Specialist
     Group.......................$ 27.84            15.82
     GROUP 1.....................$ 27.14            15.82
     GROUP 1-a...................$ 27.36            15.82
     GROUP 1-c...................$ 27.19            15.82
     GROUP 1-e...................$ 27.69            15.82
     GROUP 1-f...................$ 27.72            15.82
     GROUP 1-g (Contra Costa
     County).....................$ 27.34            15.82
     GROUP 2.....................$ 26.99            15.82
     GROUP 3.....................$ 26.89            15.82
     GROUP 4.....................$ 20.58            15.82
  See groups 1-b and 1-d under laborer classifications.
Laborers: (CONSTRUCTION CRAFT
LABORERS - AREA B:)
     Construction Specialist
     Group.......................$ 26.84            15.82
     GROUP 1.....................$ 26.14            15.82
     GROUP 1-a...................$ 26.36            15.82
     GROUP 1-c...................$ 26.19            15.82
     GROUP 1-e...................$ 26.69            15.82
     GROUP 1-f...................$ 26.72            15.82
     GROUP 2.....................$ 25.99            15.82
     GROUP 3.....................$ 25.89            15.82
     GROUP 4.....................$ 19.58            15.82
  See groups 1-b and 1-d under laborer classifications.
Laborers: (GUNITE - AREA A:)
     GROUP 1.....................$ 28.10            15.82
     GROUP 2.....................$ 27.60            15.82
     GROUP 3.....................$ 27.60            15.82
     GROUP 4.....................$ 27.60            15.82
Laborers: (GUNITE - AREA B:)
     GROUP 1.....................$ 27.10            15.82
     GROUP 2.....................$ 26.60            15.82
     GROUP 3.....................$ 26.01            15.82
     GROUP 4.....................$ 25.89            15.82
Laborers: (WRECKING - AREA A:)
     GROUP 1.....................$ 27.14            15.82
     GROUP 2.....................$ 26.99            15.82
Laborers: (WRECKING - AREA B:)
     GROUP 1.....................$ 26.14            15.82
     GROUP 2.....................$ 25.99            15.82
Landscape Laborer (GARDENERS,
HORTICULTURAL & LANDSCAPE
LABORERS - AREA A:)
     (1) New Construction........$ 26.89            15.82
     (2) Establishment Warranty
     Period......................$ 20.58            15.82
Landscape Laborer (GARDENERS,
HORTICULURAL & LANDSCAPE
LABORERS - AREA B:)
     (1) New Construction........$ 25.89            15.82
     (2) Establishment Warranty
     Period......................$ 19.58            15.82

FOOTNOTES:
  Laborers working off or with or from bos'n chairs, swinging
  scaffolds, belts shall receive $0.25 per hour above the
  applicable wage rate.  This shall not apply to workers
  entitled to receive the wage rate set forth in Group 1-a
  below.
```

LABORER CLASSIFICATIONS

CONSTRUCTION SPECIALIST GROUP: Asphalt ironer and raker; Chainsaw; Laser beam in connection with laborers' work; Cast-in- place manhole form setter; Pressure pipelayer; Davis trencher - 300 or similar type (and all small trenchers); Blaster; Diamond driller; Multiple unit drill; Hydraulic drill

GROUP 1: Asphalt spreader boxes (all types); Barko, Wacker and similar type tampers; Buggymobile; Caulker, bander, pipewrapper, conduit layer, plastic pipelayer; Certified hazardous waste worker including Leade Abatement; Compactors of all types; Concrete and magnesite mixer, 1/2 yd. and under; Concrete pan work; Concrete sander; Concrete saw; Cribber and/or shoring; Cut granite curb setter; Dri-pak-it machine; Faller, logloader and bucker; Form raiser, slip forms; Green cutter; Headerboard, Hubsetter, aligner, by any method; High pressure blow pipe (1-1/2" or over, 100 lbs. pressure/over); Hydro seeder and similar type; Jackhammer operator; Jacking of pipe over 12 inches; Jackson and similar type compactor; Kettle tender, pot and worker applying asphalt, lay-kold, creosote, lime, caustic and similar type materials (applying means applying, dipping or handling of such materials); Lagging, sheeting, whaling, bracing, trenchjacking, lagging hammer; Magnesite, epoxyresin, fiberglass, mastic worker (wet or dry); No joint pipe and stripping of same, including repair of voids; Pavement breaker and spader, including tool grinder; Perma curb; Pipelayer (including grade checking in connection with pipelaying); Precast-manhole setter; Pressure pipe tester; Post hole digger, air, gas and electric; Power broom sweeper; Power tampers of all types (except as shown in Group 2); Ram set gun and stud gun; Riprap stonepaver and rock-slinger, including placing of sacked concrete and/or sand (wet or dry) and gabions and similar type; Rotary scarifier or multiple head concrete chipping scarifier; Roto and Ditch Witch; Rototiller; Sandblaster, pot, gun, nozzle operators; Signalling and rigging; Tank cleaner; Tree climber; Turbo blaster; Vibrascreed, bull float in connection with laborers' work; Vibrator; Hazardous waste worker (lead removal); Asbestos and mold removal worker

GROUP 1-a: Joy drill model TWM-2A; Gardner-Denver model DH143 and similar type drills; Track driller; Jack leg driller; Wagon driller; Mechanical drillers, all types regardless of type or method of power; Mechanical pipe layers, all types regardless of type or method of power; Blaster and powder; All work of loading, placing and blasting of all powder and explosives of whatever type regardless of method used for such loading and placing; High scalers (including drilling of same); Tree topper; Bit grinder

GROUP 1-b: Sewer cleaners shall receive $4.00 per day above Group 1 wage rates. "Sewer cleaner" means any worker who handles or comes in contact with raw sewage in small diameter sewers. Those who work inside recently active, large diameter sewers, and all recently active sewer manholes shal receive $5.00 per day above Group 1 wage rates.

GROUP 1-c: Burning and welding in connection with laborers' work; Synthetic thermoplastics and similar type welding

GROUP 1-d: Maintenance and repair track and road beds. All employees performing work covered herein shall receive $ .25 per hour above their regular rate for all work performed on underground structures not specifically covered herein. This paragraph shall not be construed to apply to work below ground level in open cut. It shall apply to cut and cover work of subway construction after the temporary cover has been placed.

GROUP 1-e: Work on and/or in bell hole footings and shafts thereof, and work on and in deep footings. (A deep footing is a hole 15 feet or more in depth.) In the event the depth of the footing is unknown at the commencement of excavation, and the final depth exceeds 15 feet, the deep footing wage rate would apply to all employees for each and every day worked on or in the excavation of the footing from the date of inception.

GROUP 1-f: Wire winding machine in connection with guniting or shot crete

GROUP 1-g, CONTRA COSTA COUNTY: Pipelayer (including grade checking in connection with pipelaying); Caulker; Bander; Pipewrapper; Conduit layer; Plastic pipe layer; Pressure pipe tester; No joint pipe and stripping of same, including repair of voids; Precast manhole setters, cast in place manhole form setters

GROUP 2: Asphalt shoveler; Cement dumper and handling dry cement or gypsum; Choke-setter and rigger (clearing work); Concrete bucket dumper and chute; Concrete chipping and grinding; Concrete laborer (wet or dry); Driller tender, chuck tender, nipper; Guinea chaser (stake), grout crew; High pressure nozzle, adductor; Hydraulic monitor (over 100 lbs. pressure); Loading and unloading, carrying and hauling of all rods and materials for use in reinforcing concrete construction; Pittsburgh chipper and similar type brush shredders; Sloper; Single foot, hand-held, pneumatic tamper; All pneumatic, air, gas and electric tools not listed in Groups 1 through 1-f; Jacking of pipe - under 12 inches

GROUP 3: Construction laborers, including bridge and general laborer; Dump, load spotter; Flag person; Fire watcher; Fence erector; Guardrail erector; Gardener, horticultural and landscape laborer; Jetting; Limber, brush loader and piler; Pavement marker (button setter); Maintenance, repair track and road beds; Streetcar and railroad construction track laborer; Temporary air and water lines, Victaulic or similar; Tool room attendant (jobsite only)

GROUP 4: Final clean-up work of debris, grounds and building including but not limited to: street cleaner; cleaning and washing windows; brick cleaner (jobsite only); material cleaner (jobsite only). The classification "material cleaner" is to be utilized under the following conditions:
A: at demolition site for the salvage of the material.
B: at the conclusion of a job where the material is to be salvaged and stocked to be reused on another job.
C: for the cleaning of salvage material at the jobsite or temporary jobsite yard.

The material cleaner classification should not be used in the performance of "form stripping, cleaning and oiling and moving to the next point of erection".

GUNITE LABORER CLASSIFICATIONS

GROUP 1: Structural Nozzleman

GROUP 2: Nozzleman, Gunman, Potman, Groundman

GROUP 3: Reboundman

GROUP 4: Gunite laborer

WRECKING WORK LABORER CLASSIFICATIONS

GROUP 1: Skilled wrecker (removing and salvaging of sash, windows and materials)

GROUP 2: Semi-skilled wrecker (salvaging of other building materials)

LABO0067-010 06/29/2009

	Rates	Fringes
Tunnel and Shaft Laborers:		
GROUP 1	$ 33.35	14.93
GROUP 2	$ 33.12	14.93
GROUP 3	$ 32.87	14.93
GROUP 4	$ 32.42	14.93
GROUP 5	$ 31.88	14.93
Shotcrete Specialist	$ 33.87	14.93

TUNNEL AND SHAFT CLASSIFICATIONS

GROUP 1: Diamond driller; Groundmen; Gunite and shotcrete nozzlemen

GROUP 2: Rodmen; Shaft work & raise (below actual or excavated ground level)

GROUP 3: Bit grinder; Blaster, driller, powdermen, heading; Cherry pickermen - where car is lifted; Concrete finisher in tunnel; Concrete screedman; Grout pumpman and potman; Gunite & shotcrete gunman & potman; Headermen; High pressure nozzleman; Miner - tunnel, including top and bottom man on shaft and raise work; Nipper; Nozzleman on slick line; Sandblaster - potman, Robotic Shotcrete Placer, Segment Erector, Tunnel Muck Hauler, Steel Form raiser and setter; Timberman, retimberman (wood or steel or substitute materials therefore); Tugger (for tunnel laborer work); Cable tender; Chuck tender; Powderman - primer house

GROUP 4: Vibrator operator, pavement breaker; Bull gang - muckers, trackmen; Concrete crew - includes rodding and spreading, Dumpmen (any method)

GROUP 5: Grout crew; Reboundman; Swamper/ Brakeman

LABO0073-003 07/01/2009

CALAVERAS, MARIPOSA, MERCED, MONTEREY, SAN BENITO, SAN JOAQUIN, STANISLAUS AND TUOLUMNE COUNTIES:

	Rates	Fringes
LABORER		
Mason Tender-Brick	$ 27.03	14.93

LABO0073-005 07/01/2009

CALAVERAS, FRESNO, KINGS, MADERA, MARIPOSA, MERCED, SAN JOAQUIN, STANISLAUS & TUOLUMNE

	Rates	Fringes
Plasterer tender	$ 28.37	14.14

LABO0166-001 07/01/2006

ALAMEDA AND CONTRA COSTA COUNTIES:

	Rates	Fringes
Brick Tender	$ 25.91	14.65

FOOTNOTES: Work on jobs where heat-protective clothing is required: $2.00 per hour additional. Work at grinders: $.25 per hour additional. Manhole work: $2.00 per day additional.

LABO0166-002 07/01/2006

ALAMEDA AND CONTRA COSTA COUNTIES:

	Rates	Fringes
Plasterer tender	$ 30.15	15.90

Gun Man $0.75 per hour additional

LABO0270-001 07/01/2008

SANTA CLARA & SANTA CRUZ COUNTIES

	Rates	Fringes
MASON TENDER, BRICK		
Santa Clara	$ 27.93	13.48
Santa Cruz	$ 26.93	13.48

FOOTNOTE: $2.00 per hour for refactory work where heat-protective clothing is required.

LABO0270-005 07/01/2007

SANTA CLARA AND SANTA CRUZ COUNTIES

	Rates	Fringes
PLASTER TENDER		
4 Stories and under	$ 27.62	13.73
5 Stories and above	$ 29.54	13.73

LABO0294-001 07/01/2009

FRESNO, KINGS AND MADERA COUNTIES

	Rates	Fringes
LABORER (Brick)		
Mason Tender-Brick.....	$ 27.03	14.93

LABO0297-001 08/01/2007

MONTEREY AND SAN BENITO COUNTIES

	Rates	Fringes
Plasterer tender.....	$ 23.70	11.50

FOOTNOTE: Mixer person: $4.00 per day additional.

PAIN0016-001 07/01/2010

ALAMEDA, CONTRA COSTA, MONTEREY, SAN BENITO, SAN MATEO, SANTA CLARA, AND SANTA CRUZ COUNTIES

	Rates	Fringes
Painters:.....	$ 34.50	16.87

PREMIUMS:

EXOTIC MATERIALS - $0.75 additional per hour.
SPRAY WORK: - $0.50 additional per hour.
INDUSTRIAL PAINTING - $0.25 additional per hour
[Work on industrial buildings used for the manufacture and processing of goods for sale or service; steel construction (bridges), stacks, towers, tanks, and similar structures]

HIGH WORK:
over 50 feet - $2.00 per hour additional
100 to 180 feet - $4.00 per hour additional
Over 180 feet - $6.00 per houir additional

PAIN0016-003 07/01/2010

AREA 1: ALAMEDA, CONTRA COSTA, SAN FRANCISCO, SAN MATEO & SANTA CLARA COUNTIES

AREA 2: CALAVERAS, MARIPOA, MERCED, MONTEREY, SAN BENITO, SAN JOAQUIN, SANTA CRUZ, STANISLAUS & TUOLUMNE COUNTIES

	Rates	Fringes
Drywall Finisher/Taper		
AREA 1.....	$ 42.66	17.26
AREA 2.....	$ 36.53	14.78

PAIN0016-012 07/01/2010

ALAMEDA, CONTRA COSTA, MARIPOSA, MERCED, MONTEREY, SAN BENITO, SAN FRANCISCO, SAN MATEO, SANTA CLARA AND SANTA CRUZ COUNTIES

	Rates	Fringes

```
SOFT FLOOR LAYER................$ 40.71            14.88
-----------------------------------------------------------------
 PAIN0016-015 09/01/2010

CALAVERAS, MARIPOSA, MERCED, SAN JOAQUIN, STANISLAUS & TUOLUMNE
COUNTIES


                                  Rates          Fringes

PAINTER.........................$ 25.78            12.97
     Brush......................$ 29.82            12.72

FOOTNOTES:
SPRAY/SANDBLAST: $0.50 additional per hour.
EXOTIC MATERIALS: $1.00 additional per hour.
  HIGH TIME:  Over 50 ft above ground or water level $2.00
  additional per hour.  100 to 180 ft above ground or water
  level $4.00 additional per hour.  Over 180 ft above ground
  or water level $6.00 additional per hour.
-----------------------------------------------------------------
 PAIN0016-022 07/01/2010

SAN FRANCISCO COUNTY

                                  Rates          Fringes

PAINTER.........................$ 38.12            16.87
-----------------------------------------------------------------
 PAIN0169-001 01/01/2010

FRESNO, KINGS, MADERA, MARIPOSA AND MERCED COUNTIES:

                                  Rates          Fringes

GLAZIER.........................$ 31.18            14.15
-----------------------------------------------------------------
 PAIN0169-005 07/01/2010

ALAMEDA CONTRA COSTA, MONTEREY, SAN BENITO, SAN FRANCISCO, SAN
MATEO, SANTA CLARA & SANTA CRUZ COUNTIES


                                  Rates          Fringes

GLAZIER.........................$ 42.67            18.00
-----------------------------------------------------------------
 PAIN0294-004 09/01/2010

FRESNO, KINGS AND MADERA COUNTIES

                                  Rates          Fringes

PAINTER
     Brush, Roller..............$ 27.46            12.25
     Drywall Finisher/Taper......$ 31.26            13.28

FOOTNOTE:
  Spray Painters & Paperhangers recive $1.00 additional per
  hour. Painters doing Drywall Patching receive $1.25
  additional per hour.  Lead Abaters & Sandblasters receive
  $1.50 additional per hour.  High Time - over 30 feet (does
  not include work from a lift) $0.75 per hour additional.
-----------------------------------------------------------------
```

PAIN0294-005 07/01/2010

FRESNO, KINGS & MADERA

	Rates	Fringes
SOFT FLOOR LAYER.....	$ 30.12	11.39

PAIN0767-001 07/01/2010

CALAVERAS, SAN JOAQUIN, STANISLAUS AND TUOLUMNE COUNTIES:

	Rates	Fringes
GLAZIER.....	$ 33.53	16.20

PAID HOLIDAYS: New Year's Day, Martin Luther King, Jr. Day, President's Day, Memorial Day, Independence Day, Labor Day, Veteran's Day, Thanksgiving Day, and Christmas Day.

Employee rquired to wear a body harness shall receive $1.50 per hour above the basic hourly rate at any elevation.

PAIN1176-001 07/01/2009

HIGHWAY IMPROVEMENT

	Rates	Fringes
Parking Lot Striping/Highway Marking:		
GROUP 1.....	$ 29.44	12.51
GROUP 2.....	$ 24.23	12.51
GROUP 3.....	$ 24.86	12.51

CLASSIFICATIONS

GROUP 1: Striper: Layout and application of painted traffic stripes and marking; hot thermo plastic; tape, traffic stripes and markings

GROUP 2: Gamecourt & Playground Installer

GROUP 3: Protective Coating, Pavement Sealing

---

* PAIN1237-003 07/01/2010

CALAVERAS; SAN JOAQUIN COUNTIES; STANISLAUS AND TUOLUMNE COUNTIES:

	Rates	Fringes
SOFT FLOOR LAYER.....	$ 30.54	13.45

PLAS0066-002 07/01/2009

ALAMEDA, CONTRA COSTA, SAN MATEO AND SAN FRANCISCO COUNTIES:

	Rates	Fringes
PLASTERER.....	$ 34.13	21.15

PLAS0300-001 07/01/2009

```
                                  Rates          Fringes

PLASTERER
     AREA 188:  Fresno...........$ 29.72           14.21
     AREA 224:  San Benito,
     Santa Clara, Santa Cruz.....$ 34.22           14.08
     AREA 295:  Calaveras & San
     Joaquin Couonties...........$ 32.82           15.10
     AREA 337:  Monterey County..$ 31.01           13.93
     AREA 429:  Mariposa,
     Merced, Stanislaus,
     Tuolumne Counties...........$ 32.82           15.30
-----------------------------------------------------------------
 PLAS0300-005 06/28/2010

                                  Rates          Fringes

CEMENT MASON/CONCRETE FINISHER...$ 28.65           18.56
-----------------------------------------------------------------
 PLUM0038-001 07/01/2010

SAN FRANCISCO COUNTY

                                  Rates          Fringes

PLUMBER (Plumber,
Steamfitter, Refrigeration
Fitter)........................$ 55.25           37.04
-----------------------------------------------------------------
 PLUM0038-005 07/01/2010

SAN FRANCISCO COUNTY

                                  Rates          Fringes

Landscape/Irrigation Fitter
(Underground/Utility Fitter).....$ 46.96           26.35
-----------------------------------------------------------------
 PLUM0062-001 07/01/2010

MONTEREY AND SANTA CRUZ COUNTIES

                                  Rates          Fringes

PLUMBER & STEAMFITTER............$ 40.20           20.68
-----------------------------------------------------------------
 PLUM0159-001 07/01/2010

CONTRA COSTA COUNTY

                                  Rates          Fringes

Plumber and steamfitter
     (1) Refrigeration...........$ 52.23           22.49
     (2) All other work..........$ 53.12           22.49
-----------------------------------------------------------------
 PLUM0246-001 07/01/2010

FRESNO, KINGS & MADERA COUNTIES

                                  Rates          Fringes

PLUMBER & STEAMFITTER............$ 35.45           21.08
-----------------------------------------------------------------
 PLUM0246-004 07/01/2006
```

FRESNO, MERCED & SAN JOAQUIN COUNIES

	Rates	Fringes
PLUMBER (PIPE TRADESMAN).....	$ 13.00	7.30

PIPE TRADESMAN SCOPE OF WORK:
Installation of corrugated metal piping for drainage, as well as installation of corrugated metal piping for culverts in connection with storm sewers and drains; Grouting, dry packing and diapering of joints, holes or chases including paving over joints, in piping; Temporary piping for dirt work for building site preparation; Operating jack hammers, pavement breakers, chipping guns, concrete saws and spades to cut holes, chases and channels for piping systems; Digging, grading, backfilling and ground preparation for all types of pipe to all points of the jobsite; Ground preparation including ground leveling, layout and planting of shrubbery, trees and ground cover, including watering, mowing, edging, pruning and fertilizing, the breaking of concrete, digging, backfilling and tamping for the preparation and completion of all work in connection with lawn sprinkler and landscaping; Loading, unloading and distributing materials at jobsite; Putting away materials in storage bins in jobsite secure storage area; Demolition of piping and fixtures for remodeling and additions; Setting up and tearing down work benches, ladders and job shacks; Clean-up and sweeping of jobsite; Pipe wrapping and waterproofing where tar or similar material is applied for protection of buried piping; Flagman

---

PLUM0342-001 07/01/2010

ALAMEDA & CONTRA COSTA COUNTIES

	Rates	Fringes
PIPEFITTER		
CONTRA COSTA COUNTY.....	$ 47.46	27.14
PLUMBER, PIPEFITTER, STEAMFITTER		
ALAMEDA COUNTY.....	$ 49.21	29.14

PLUM0355-004 07/01/2010

ALAMEDA, CALAVERAS, CONTRA COSTA, FRESNO, KINGS, MADERA, MARIPOSA, MERCED, MONTEREY, SAN BENITO, SAN JOAQUIN, SAN MATEO, SANTA CLARA, SANTA CRUZ, STANISLAUS, AND TUOLUMNE COUNTIES:

	Rates	Fringes
Underground Utility Worker		
/Landscape Fitter.....	$ 28.10	7.20

PLUM0393-001 07/01/2010

SAN BENITO AND SANTA CLARA COUNTIES

	Rates	Fringes
PLUMBER/PIPEFITTER.....	$ 51.86	26.13

PLUM0442-001 07/01/2010

CALAVERAS, MARIPOSA, MERCED, SAN JOAQUIN, STANISLAUS & TUOLUMNE COUNTIES

	Rates	Fringes
PLUMBER & STEAMFITTER	$ 35.70	21.18

PLUM0467-001 07/01/2010

SAN MATEO COUNTY

	Rates	Fringes
Plumber/Pipefitter/Steamfitter	$ 51.75	24.26

---

* ROOF0027-002 09/01/2010

FRESNO, KINGS, AND MADERA COUNTIES

	Rates	Fringes
ROOFER	$ 27.65	8.07

FOOTNOTE: Work with pitch, pitch base of pitch impregnated products or any material containing coal tar pitch, on any building old or new, where both asphalt and pitchers are used in the application of a built-up roof or tear off: $2.00 per hour additional.

ROOF0040-002 09/01/2009

SAN FRANCISCO & SAN MATEO COUNTIES:

	Rates	Fringes
ROOFER	$ 33.33	10.39

ROOF0081-001 08/01/2009

ALAMEDA AND CONTRA COSTA COUNTIES:

	Rates	Fringes
Roofer	$ 30.95	12.65

ROOF0081-004 08/01/2009

CALAVERAS, MARIPOSA, MERCED, SAN JOAQUIN, STANISLAUS AND TUOLUMNE COUNTIES:

	Rates	Fringes
ROOFER	$ 24.56	12.60

ROOF0095-002 08/01/2009

MONTEREY, SAN BENITO, SANTA CLARA, AND SANTA CRUZ COUNTIES:

	Rates	Fringes
ROOFER		
Journeyman	$ 30.32	9.29

```
     Kettle person (2 kettles);
     Bitumastic, Enameler, Coal
     Tar, Pitch and Mastic
     worker.....................$ 33.32            9.29
     Kettleman (2 kettles),
     Bitumastic Enameler, Coal
     Tar, Pitch & Mastic.........$ 33.73            9.89
----------------------------------------------------------------
 SFCA0483-001 08/02/2010

ALAMEDA, CONTRA COSTA, SAN FRANCISCO, SAN MATEO AND SANTA CLARA
COUNTIES:


                                  Rates          Fringes

SPRINKLER FITTER (FIRE)..........$ 52.09           20.55
----------------------------------------------------------------
 SFCA0669-011 04/01/2010

CALAVERAS, FRESNO, KINGS, MADERA, MARIPOSA, MERCED, MONTEREY,
SAN BENITO, SAN JOAQUIN, SANTA CRUZ, STANISLAUS AND TUOLUMNE
COUNTIES:


                                  Rates          Fringes

SPRINKLER FITTER................$ 33.35           17.60
----------------------------------------------------------------
 SHEE0104-001 07/01/2009

AREA 1: ALAMEDA, CONTRA COSTA, SAN FRANCISCO, SAN MATEO, SANTA
CLARA

AREA 2: MONTEREY & SAN BENITO

AREA 3: SANTA CRUZ


                                  Rates          Fringes

SHEET METAL WORKER
     AREA 1:
      Mechanical Contracts
      under $200,000.............$ 43.32           26.40
      All Other Work.............$ 47.73           26.67
     AREA 2......................$ 37.32         3%+22.45
     AREA 3......................$ 39.25           22.26
----------------------------------------------------------------
 SHEE0104-015 07/01/2009

ALAMEDA, CONTRA COSTA, MONTEREY, SAN BENITO, SAN FRANCISCO, SAN
MATEO, SANTA CLARA AND SANTA CRUZ COUNTIES:


                                  Rates          Fringes

SHEETMETAL WORKER (Metal
Decking and Siding only).........$ 33.43           24.31
----------------------------------------------------------------
 SHEE0162-001 07/01/2010

CALAVERAS AND SAN JOAQUIN COUNTIES:

                                  Rates          Fringes
```

SHEET METAL WORKER.....$ 28.91 23.56

SHEE0162-003 07/01/2010

MARIPOSA, MERCED, STANISLAUS AND TUOLUMNE COUNTIES:

	Rates	Fringes
SHEET METAL WORKER (Excluding metal deck and siding).....	$ 31.34	25.41

SHEE0162-004 07/01/2010

FRESNO, KINGS, AND MADERA COUNTIES:

	Rates	Fringes
SHEET METAL WORKER.....	$ 27.79	29.02

SHEE0162-013 07/01/2010

CALAVERAS, FRESNO, KINGS, MADERA, MARIPOSA, MERCED, SAN JOAQUIN, STANISLAUS AND TUOLUMNE COUNTIES:

	Rates	Fringes
Sheet metal worker (Metal decking and siding only).....	$ 28.91	23.56

TEAM0094-001 07/01/2009

	Rates	Fringes
Truck drivers:		
GROUP 1.....	$ 27.13	18.99
GROUP 2.....	$ 27.43	18.99
GROUP 3.....	$ 27.73	18.99
GROUP 4.....	$ 28.08	18.99
GROUP 5.....	$ 28.43	18.99

FOOTNOTES:

Articulated dump truck; Bulk cement spreader (with or without auger); Dumpcrete truck; Skid truck (debris box); Dry pre-batch concrete mix trucks; Dumpster or similar type; Slurry truck: Use dump truck yardage rate.
Heater planer; Asphalt burner; Scarifier burner; Industrial lift truck (mechanical tailgate); Utility and clean-up truck: Use appropriate rate for the power unit or the equipment utilized.

TRUCK DRIVER CLASSIFICATIONS

GROUP 1: Dump trucks, under 6 yds.; Single unit flat rack (2-axle unit); Nipper truck (when flat rack truck is used appropriate flat rack shall apply); Concrete pump truck (when flat rack truck is used appropriate flat rack shall apply); Concrete pump machine; Fork lift and lift jitneys; Fuel and/or grease truck driver or fuel person; Snow buggy; Steam cleaning; Bus or personhaul driver; Escort or pilot car driver; Pickup truck; Teamster oiler/greaser and/or serviceperson; Hook tender (including loading and unloading); Team driver; Tool room attendant (refineries)

GROUP 2: Dump trucks, 6 yds. and under 8 yds.; Transit mixers, through 10 yds.; Water trucks, under 7,000 gals.; Jetting trucks, under 7,000 gals.; Single-unit flat rack (3-axle unit); Highbed heavy duty transport; Scissor truck; Rubber-tired muck car (not self-loaded); Rubber-tired truck jumbo; Winch truck and "A" frame drivers; Combination winch truck with hoist; Road oil truck or bootperson; Buggymobile; Ross, Hyster and similar straddle carriers; Small rubber-tired tractor

GROUP 3: Dump trucks, 8 yds. and including 24 yds.; Transit mixers, over 10 yds.; Water trucks, 7,000 gals. and over; Jetting trucks, 7,000 gals. and over; Vacuum trucks under 7500 gals. Trucks towing tilt bed or flat bed pull trailers; Lowbed heavy duty transport; Heavy duty transport tiller person; Self- propelled street sweeper with self-contained refuse bin; Boom truck - hydro-lift or Swedish type extension or retracting crane; P.B. or similar type self-loading truck; Tire repairperson; Combination bootperson and road oiler; Dry distribution truck (A bootperson when employed on such equipment, shall receive the rate specified for the classification of road oil trucks or bootperson); Ammonia nitrate distributor, driver and mixer; Snow Go and/or plow

GROUP 4: Dump trucks, over 25 yds. and under 65 yds.; Water pulls - DW 10's, 20's, 21's and other similar equipment when pulling Aqua/pak or water tank trailers; Helicopter pilots (when transporting men and materials); Lowbedk Heavy Duty Transport up to including 7 axles; DW10's, 20's, 21's and other similar Cat type, Terra Cobra, LeTourneau Pulls, Tournorocker, Euclid and similar type equipment when pulling fuel and/or grease tank trailers or other miscellaneous trailers; Vacuum Trucks 7500 gals and over and truck repairman

GROUP 5: Dump trucks, 65 yds. and over; Holland hauler; Low bed Heavy Duty Transport over 7 axles

---

WELDERS - Receive rate prescribed for craft performing operation to which welding is incidental.

==========

Unlisted classifications needed for work not included within the scope of the classifications listed may be added after award only as provided in the labor standards contract clauses (29CFR 5.5 (a) (1) (ii)).

In the listing above, the "SU" designation means that rates listed under the identifier do not reflect collectively bargained wage and fringe benefit rates. Other designations indicate unions whose rates have been determined to be prevailing.

WAGE DETERMINATION APPEALS PROCESS

1.) Has there been an initial decision in the matter? This can be:

* an existing published wage determination
* a survey underlying a wage determination
* a Wage and Hour Division letter setting forth a position on a wage determination matter
* a conformance (additional classification and rate) ruling

On survey related matters, initial contact, including requests for summaries of surveys, should be with the Wage and Hour Regional Office for the area in which the survey was conducted because those Regional Offices have responsibility for the Davis-Bacon survey program. If the response from this initial contact is not satisfactory, then the process described in 2.) and 3.) should be followed.

With regard to any other matter not yet ripe for the formal process described here, initial contact should be with the Branch of Construction Wage Determinations. Write to:

Branch of Construction Wage Determinations
Wage and Hour Division
U.S. Department of Labor
200 Constitution Avenue, N.W.
Washington, DC 20210

2.) If the answer to the question in 1.) is yes, then an interested party (those affected by the action) can request review and reconsideration from the Wage and Hour Administrator (See 29 CFR Part 1.8 and 29 CFR Part 7). Write to:

Wage and Hour Administrator
U.S. Department of Labor
200 Constitution Avenue, N.W.
Washington, DC 20210

The request should be accompanied by a full statement of the interested party's position and by any information (wage payment data, project description, area practice material, etc.) that the requestor considers relevant to the issue.

3.) If the decision of the Administrator is not favorable, an interested party may appeal directly to the Administrative Review Board (formerly the Wage Appeals Board). Write to:

Administrative Review Board
U.S. Department of Labor
200 Constitution Avenue, N.W.
Washington, DC 20210

4.) All decisions by the Administrative Review Board are final.

==========

END OF GENERAL DECISION

SECTION 01420

REFERENCES AND DEFINITIONS

PART 1 GENERAL

1.1 SUMMARY

A. Section Includes: Reference standards, abbreviations, symbols, definitions, and terminology used in Contract Documents.
B. Full titles are given in this Section for standards cited in other Sections of Specifications.
C. Material and workmanship specified by reference to number, symbol, or title of specific standard such as state standard, commercial standard, federal specifications, technical society, or trade association standard, or other similar standard, shall comply with requirements of standards except when more rigid requirements are specified or required by applicable codes.
D. Standards referred to, except as modified herein, shall have full force and effect as though printed in the Contract Documents. Standards are not furnished to Contractor because manufacturers and trades involved are assumed to be familiar with their requirements.

1.2 REFERENCE TO STANDARDS AND SPECIFICATIONS OF TECHNICAL SOCIETIES; REPORTING AND RESOLVING DISCREPANCIES

A. Reference to standards, specifications, manuals, or codes of any technical society, organization, or association, or to the laws or regulations of any governmental authority, whether such reference be specific or by implication, shall mean the latest standard, specification, manual, code, or laws or regulations (including all amendments, changes, errata, addenda, and supplements) in effect at the time of opening of Bids, except as may be otherwise specifically stated in the Contract Documents.
   1. When an edition or effective date of a reference is not given, it shall be understood to be the current edition or latest revision published as of the date of opening Bids.
      a. Exception: Comply with issues in effect as listed in governing legal requirements.
B. If during the performance of the Work, Contractor discovers any conflict, error, ambiguity, or discrepancy within the Contract Documents or between the Contract Documents and any provision of any such law or regulation applicable to the performance of the Work or of any such standard, specification, manual, or code, or of any instruction of any supplier, report it in writing at once by submitting a RFI to Owner, and do not proceed with the Work affected thereby until consent to do so is given by Owner.
C. Except as otherwise specifically stated in the Contract Documents or as may be provided by Change Order, CCD, or Supplemental Instruction, the provisions of the Contract Documents shall take precedence in resolving any conflict, error, ambiguity, or discrepancy between the provisions of the Contract Documents and:
   1. The provisions of any such standard, specification, manual, code, or instruction (whether or not specifically incorporated by reference in the Contract Documents); or
   2. The provisions of any such laws or regulations applicable to the performance of the Work (unless such an interpretation of the provisions of the Contract Documents would result in violation of such law or regulation).
D. No provision of any such standard, specification, manual, code, or instruction shall be effective to change the duties and responsibilities of Owner, Contractor, or Engineer, or any of their subcontractors, consultants, agents, or employees, from those set forth in the

Contract Documents, nor shall it be effective to assign to Owner, Engineer, or any of their consultants, agents, representatives or employees any duty or authority to supervise or direct the furnishing or performance of the Work or any duty or authority to undertake responsibility inconsistent with the provisions of the Contract Documents.

E. Comply with the applicable portions of standards and specifications published by the technical societies, institutions, associations, and governmental agencies referred to in Specifications.

F. Referenced Grades, Classes, and Types: Where an alternative or optional grade, class, or type of product or execution is included in a reference but is not identified in Drawings or in Specifications, provide the highest, best, and greatest of the alternatives or options for the intended use and prevailing conditions.

G. Jobsite Copies:
   1. Obtain and maintain at the Site copies of reference standards identified on Drawings and in Specifications in order to properly execute the Work.
   2. At a minimum, the following shall be readily available at the Site:
      a. Safety Codes: State of California, Division of Industrial Safety regulations.

H. ASTM and ANSI References: Specifications and Standards of the American Society for Testing and Materials (ASTM) and the American National Standards Institute (ANSI) are identified in the Drawings and Specifications by abbreviation and number only and may not be further identified by title, date, revision, or amendment. It is presumed that Contractor is familiar with and has access to these nationally- and industry-recognized specifications and standards.

1.3 ABBREVIATIONS

A. Listed hereinafter are the various organizations or references which may appear in the Contract Documents, along with their respective acronyms and/or abbreviations:

AA	Aluminum Association
AABC	Associated Air Balance Council
AAMA	Architectural Aluminum Manufacturers Association
AAP	Affirmative Action Program
AASHTO	American Association of State Highway and Transportation Officials
AB	Aggregate Base
ABMA	American Bearing Manufacturers Association
ABPA	American Board Products Association
ACI	American Concrete Institute
ADA	Americans with Disabilities Act
AED	Association of Equipment Distributors
AFBMA	Anti-friction Bearing Manufacturers Association
AGA	American Gas Association
AGMA	American Gear Manufacturers Association
AISC	American Institute of Steel Construction
AISI	American Iron and Steel Institute
AITC	American Institute of Timber Construction
AMCA	Air Moving and Conditioning Association, Inc.
ANSI	American National Standards Institute (formerly American Standards Association)
APA	American Plywood Association

API	American Petroleum Institute
ARI	Air-Conditioning and Refrigeration Institute
ASCE	American Society of Civil Engineers
ASHRAE	American Society of Heating, Refrigeration, and Air-Conditioning Engineers
ASME	American Society of Mechanical Engineers
ASTM	American Society for Testing and Materials
AWCI	Association of the Wall and Ceiling Industries
AWG	American Wire Gauge
AWPA	American Wood-Preservers' Association
AWPB	American Wood Preservers Bureau
AWS	American Welding Society
AWWA	American Water Works Association
BHMA	Builders Hardware Manufacturers Association
BIL	Basic Insulation Level
BOD	Biological Oxygen Demand
Cal/OSHA	California Occupational Safety and Health Administration
Caltrans	State of California, Department of Transportation
CBC	California Building Code
CCD	Construction Change Directive
CCR	California Code of Regulations
CEC	California Electric Code or California Energy Commission
CF	Cubic Foot or Cubic Feet
CFM	Cubic Feet per Minute
CFR	Code of Federal Regulations
CGA	Common Ground Alliance
CI	Chlorine Institute, Inc.
CISPI	Cast Iron Soil Pipe Institute
CL	Center Line
CLMFI	Chain Link Fence Manufacturers Institute
CMAA	Crane Manufacturers Association of America, Inc.
CMC	California Mechanical Code
CO	Change Order
COE	United States Army Corps of Engineers
CPC	California Plumbing Code
CPM	Critical Path Method
CPUC	California Public Utilities Commission
CRA	California Redwood Association
CRSI	Concrete Reinforcing Steel Institute
CS	Commercial Standards, U.S. Department of Commerce
CSA	Canadian Standards Association
CY	Cubic Yard or Cubic Yards
DFPA	Douglas Fir Plywood Institute
DFT	Dry Film Thickness
DHI	Door and Hardware Institute
EIA	Electronic Industries Association
EPA	Environmental Protection Agency
ETL	Electrical Testing Laboratories

FGMA	Flat Glass Marketing Association
FPS	Feet per Second or Fluid Power Society
FS	Federal Specifications
GA	Gypsum Association
GPM	Gallons Per Minute
Greenbook	Standard Specifications for Public Works Construction
HI	Hydraulic Institute
HMI	Hoist Manufacturer's Institute
HMMA	Hollow Metal Manufacturer's Association
HP	Horse Power
HPMA	Hardwood Plywood Manufacturers Association
HVAC	Heating, Ventilating and Air Conditioning
IACS	International Annealed Copper Standards
IAPMO	International Association of Plumbing and Mechanical Officials
ICBO	International Conference of Building Officials
ICEA	Insulated Cable Engineers Association
ID	Identification or Inside Diameter
IEEE	Institute of Electrical and Electronic Engineers
IES	Illuminating Engineering Society
ISA	International Society of Arboriculture
ISAS	Instrumentation, Systems, and Automation Society
ISO	International Organization for Standardization
JATC	Joint Apprenticeship Training Committee
JV	Joint Venture
LBE	Local Business Enterprise
LLC	Limited Liability Corporation or Company
LS	Lump Sum
M.I.	Middle Initial
M/WBE	Minority and/or Woman-Owned Business Enterprise
MBE	Minority Business Enterprise
MGD	Million Gallons per Day
MIA	Masonry Institute of America
MIA	Marble Institute of America
MLSFA	Metal Lath/Steel Framing Association
MS	Military Specifications
MSDS	Material Safety Data Sheet
MSS	Manufacturers Standardization Society of the Valve & Fitting Industry
NAAMM	National Association of Architectural Metal Manufacturers
NACE	National Association of Corrosion Engineers
NBS	National Bureau of Standards
NEC	National Electric Code
NEMA	National Electric Manufacturers Association
NESC	National Electrical Safety Code
NFoPA	National Forest Products Association
NFPA	National Fire Protection Association
NIC	Not In Contract
NIOSH	National Institute for Occupational Safety and Health
NIST	National Institute of Standards and Technology

NPT	National Pipe Thread
NRMCA	National Ready Mixed Concrete Association
NSF	National Sanitation Foundation
NTS	Not to Scale
NWWDA	National Wood Windows and Doors Association
OC	On Center
OD	Outside Diameter
OSHA	Occupational Safety and Health Administration
OSHPD	Office of Statewide Health Planning and Department
PCA	Portland Cement Association
PCI	Prestressed Concrete Institute
PDI	Plumbing and Drainage Institute
PG&E	Pacific Gas and Electric Company
PL	Property Line
PLC	Programmable Logic Controller
PM	Preventive Maintenance
PPM	Parts per Million
PR	Proposal Request
PRMD	Permits and Resource Management Department, County of Sonoma
PS	Product Standard, U. S. Department of Commerce
PSF or psf	Pounds per Square Foot
PSI or psi	Pounds per Square Inch
PSIG	Pounds per Square Inch Gauge
PVC	Polyvinyl chloride
RC	Relative Compaction
RFI	Request for Information
RFP	Request for Proposals
RFS	Request for Substitution
RIS	Redwood Inspection Service
RPM	Revolutions per Minute
SAE	Society of Automotive Engineers
SDeI	Steel Deck Institute
SDoI	Steel Door Institute
SDR	Standard Dimension Ratio
SF	Square Foot or Square Feet
SFM	State of California, Office of State Fire Marshal
SIDR	Standard Inside Dimension Ratio
SIGMA	Sealed Insulating Glass Manufacturers Association
SJI	Steel Joint Institute
SMACNA	Sheet Metal and Air Conditioning Contractors National Association
SPIB	Southern Pine Inspection Bureau
SSPC	Society for Protective Coating (formerly Steel Structures Painting Council)
SWI	Steel Window Institute
TCA	Tile Council of America
TIE	Time Impact Evaluation
TMS	The Masonry Society
TPI	Truss Plate Institute Inc.
UBC	Uniform Building Code

UFC	Uniform Fire Code
UL	Underwriters' Laboratories, Inc.
UMC	Uniform Mechanical Code
UPC	Uniform Plumbing Code
USA	Underground Service Alert
USACE	United States Army Corps of Engineers
USC	United States Code
VOC	Volatile Organic Compounds
WBE	Women's Business Enterprise
WCLIB	West Coast Lumber Inspection Bureau
WHI	Warnock Hersey International
WIC	Woodwork Institute of California
WWPA	Western Wood Products Association
WWPI	Western Wood Preservers Institute

B. Abbreviations in Specifications:

cm	centimeter (centimeters)
Co.	Company
Corp.	Corporation
cu	Cubic
dia	diameter
Div	Division
ft	foot (feet)
g	gram (grams) or Standard Acceleration of Gravity
gal	gallon (gallons)
gpd	gallons per Day
hr	hour
in	inch (inches)
Inc.	Incorporated
kg	kilogram (kilograms)
km	kilometer (kilometers)
kVAR	kilovolts amperes reactive
kW	kilowatt
l	liter (liters)
lb(s)	Pound(s)
m	meter (meters)
mfr	manufacturer
mg	milligram (milligrams)
ml/mls	milliliter (milliliters)
mm	millimeter (millimeters)
No	number
sq	square
Sta	Station
T & G	tongue and groove
Typ	typical
US	United States
yd	yard (yards)

C. Abbreviations on Drawings:
   1. As listed for Specifications above.
   2. Additional abbreviations, used only on Drawings, are indicated thereon.

1.4 SYMBOLS

A. Symbols in Specifications:

:	"shall be" or "shall" - where used within sentences or paragraphs
#1	number
1#	pound
&	and
%	percent
C	Centigrade
F	Fahrenheit
°	degree
/	"per," except where used to combine words; example: power/fuel, and in that case it means "and"
"	inch (inches)
'	foot (feet)
@	at

B. Symbols on Drawings:
   1. As listed for Specifications above.
   2. Symbols, used only on Drawings, are indicated thereon.

1.5 DEFINITIONS

A. Wherever any of the words or phrases defined below, or a pronoun used in place thereof, is used in any part of the Contract Documents, it shall have the meaning here set forth. In the Contract Documents, the neuter gender includes the feminine and masculine, and the singular number includes the plural.
B. The following definitions shall apply regardless of capitalization unless the context otherwise requires:
   1. Wherever words "as directed," "as required," "as permitted," or words of like effect are used, it shall be understood that direction, requirements, or permission of Owner is intended. Words "sufficient," "necessary," "proper," and the like shall mean sufficient, necessary, or proper in judgment of Owner. Words "approved," "acceptable," "satisfactory," "favorably reviewed," or words of like import, shall mean approved by, or acceptable to, or satisfactory to, or favorably reviewed by Owner.
   2. Wherever the word "may" or "ought" is used, the action to which it refers is discretionary. Wherever the word "shall" or "will" is used, the action to which it refers is mandatory.
   3. Addenda: Written or graphic instruments issued prior to the opening of Bids, which clarify, correct, or change the bidding requirements or the Contract Documents. Addenda shall not include the minutes of the Pre-Bid Conference and/or Site Visit.

4. Agency: The Sonoma County Water Agency (SCWA), a public agency of the State of California, acting under and by virtue of the authority vested in the Owner by the laws of the State of California as an agent of District.
5. Agreement (Document 00520): Agreement is the basic Contract Document that binds the parties to construction Work. Agreement defines relationships and obligations between Owner and Contractor and by reference incorporates Conditions of Contract, Drawings, and Specifications and contains Addenda and all Modifications subsequent to execution of Contract Documents.
6. Alternate: Work added to or deducted from the base Bid, if accepted by Owner.
7. Application for Payment: Written application for monthly or periodic progress or final payment made by Contractor complying with the Contract Documents.
8. Approved Equal: Approved in writing by Owner as being of equivalent quality, utility and appearance.
9. Asbestos: Any material that contains more than one percent asbestos and is friable or is releasing asbestos fibers into the air above current action levels established by OSHA or Cal/OSHA.
10. Bid: The offer or proposal of the Bidder submitted on the prescribed form(s) setting forth the prices for the Work to be performed.
11. Bidder: One who submits a Bid.
12. Bidding Documents: All documents comprising the Project Manual (including all documents and Specification Sections listed in Document 00010 [Table of Contents]), including documents supplied for bidding purposes only and Contract Documents.
13. Board: The Board of Directors of the Owner.
14. Business Day: Any Day other than Saturday, Sunday, and the following days that have been designated as holidays by Owner. If a holiday falls on a Saturday, the preceding Friday will be the holiday. If a holiday falls on a Sunday, the following Monday will be the holiday.
    a. New Year's Day, January 1;
    b. Martin Luther King Jr.'s Birthday, third Monday in January;
    c. Lincoln's Birthday, February 12;
    d. Presidents' Day, third Monday in February;
    e. Memorial Day, last Monday in May;
    f. Independence Day, July 4;
    g. Labor Day, first Monday in September;
    h. Veterans' Day, November 11;
    i. Thanksgiving Day, as designated by the President;
    j. The Day following Thanksgiving Day;
    k. Christmas Day, December 25; and
    l. Each day appointed by the Governor of California and formally recognized by the Sonoma County Board of Supervisors as a day of mourning, thanksgiving, or special observance.
15. By Owner: Work that will be performed by Owner or its agents at the Owner's expense.

16. By Others: Work that is outside scope of Work to be performed by Contractor under this Contract, which will be performed by Owner, other contractors, or other means.
17. Change Order: A written instrument prepared by Owner and signed by Owner and Contractor, stating their agreement upon all of the following:
    a. a change in the Work;
    b. the amount of the adjustment in the Contract Sum, if any; and
    c. the amount of the adjustment in the Contract Time, if any.
18. Code Inspector: A local or state agency responsible for the enforcement of applicable codes and regulations.
19. Concealed: Work not exposed to view in the finished Work, including within or behind various construction elements.
20. Construction Change Directive ("CCD"): A written order prepared and signed by Owner, directing a change in the Work and stating a proposed basis for adjustment, if any, in the Contract Sum or Contract Time, or both.
21. Contract Conditions or Conditions of the Contract: Consists of two parts: General Conditions and Supplementary Conditions.
    a. General Conditions are general clauses that are common to the Owner Contracts, including Document 00700 (General Conditions).
    b. Supplementary Conditions modify or supplement General Conditions to meet specific requirements for these Contract Documents, including Document 00800 (Supplementary Conditions) and Document 00805 (Supplementary Conditions – Hazardous Materials).
22. Contract Documents and Contract: Contract Documents and Contract shall consist of the documents identified as the Contract Documents in Document 00520 (Agreement), plus all changes, Addenda, and Modifications thereto.
23. Contract Modification: Either:
    a. a written amendment to Contract signed by Contractor and Owner; or
    b. a Change Order; or
    c. a Construction Change Directive; or
    d. a written directive for a minor change in the Work issued by Owner.
24. Contract Sum: The sum stated in the Agreement and, including authorized adjustments, the total amount payable by Owner to Contractor for performance of the Work and the Contract Documents. The Contract Sum is also sometimes referred to as the Contract Price or the Contract Amount.
25. Contract Time: The number or numbers of Days or the dates stated in the Agreement:
    a. to achieve Substantial Completion of the Work or designated Milestones; and/or
    b. to complete the Work so that it is ready for final payment and is accepted.
26. Contractor: The person or entity identified as such in the Agreement and referred to throughout the Contract Documents as if singular in number and neutral in gender. The term "Contractor" means the Contractor or its authorized representative.
27. Contractor's Employees: Persons engaged in execution of Work under Contract as direct employees of Contractor, as Subcontractors, or as employees of Subcontractors.

28. Day: One calendar day of 24 hours measured from midnight to the next midnight, unless the word "day" is specifically modified to the contrary.
29. Defective: An adjective which, when modifying the word "Work," refers to Work that is unsatisfactory or unsuited for the use intended, faulty, or deficient, that does not conform to the Contract Documents, or does not meet the requirements of any inspection, reference standard, test or approval referred to in the Contract Documents (including but not limited to approval of Samples and "or equal" items), or has been damaged prior to final payment (unless responsibility for the protection thereof has been assumed by Owner). Owner is the judge of whether Work is Defective.
30. District: The Sonoma Valley County Sanitation District, a local district of the State of California, acting by and through its Board of Directors.
31. Drawings: The graphic and pictorial portions of Contract Documents, wherever located and whenever issued, showing the design, location and dimensions of the Work, generally including plans, elevations, sections, details, schedules, and diagrams.
32. Engineer: If used elsewhere in the Contract Documents, "Engineer" shall mean a person holding a valid California State Architect's or Engineer's license representing the Owner in the administration of the Contract Documents. Engineer may be an employee of or an independent consultant to Owner. When Engineer is referred to within the Contract Documents and no Engineer has in fact been designated, then the matter shall be referred to Owner. The term Engineer shall be construed to include employees of Engineer and/or employees that Engineer supervises. When the designated Engineer is an employee of Owner, his or her authorized representatives on the Project will be included under the term Engineer. If Engineer is an employee of Owner, or Agency, Engineer is the beneficiary of all Contractor obligations to Owner, including without limitation, all releases and indemnities.
33. Equal: Equal in opinion of Owner. Burden of proof of equality is responsibility of Contractor.
34. Exposed: Work exposed to view in the finished Work, including behind louvers, grilles, registers and various other construction elements.
35. Final Acceptance or Final Completion: Owner's acceptance of the Work as satisfactorily completed in accordance with Contract Documents. Requirements for Final Acceptance/Final Completion include, but are not limited to:
    a. All systems having been tested and accepted as having met requirements of Contract Documents.
    b. All required instructions and training sessions having been given by Contractor.
    c. All Project Record Documents having been submitted by Contractor, reviewed by Owner, and accepted by Owner.
    d. All punch list Work, as directed by Owner, having been completed by Contractor.
    e. Generally all Work, except Contractor maintenance after Final Acceptance/Final Completion, having been completed to satisfaction of Owner.
36. Force Account: Work directed to be performed without prior agreement as to lump sum or unit price cost thereof, and which is to be billed at cost for labor, materials, equipment, taxes, and other costs, plus a specified percentage for overhead and profit.
37. Furnish: Supply only, do not install.
38. Indicated: Shown or noted on the Drawings.

39. Install: Install or apply only, do not furnish.
40. Latent: Not apparent by reasonable inspection, including but not limited to, the inspections and research required as a condition to bidding under Document 00700 (General Conditions).
41. Law: Unless otherwise limited, all applicable laws including without limitation all federal, state, and local laws, statutes, standards, rules, regulations, ordinances, and judicial and administrative decisions.
42. Material: This word shall be construed to embrace machinery, manufactured articles, materials of construction (fabricated or otherwise), and any other classes of material to be furnished in connection with Contract, except where a more limited meaning is indicated by context.
43. Milestone: A principal event specified in Contract Documents relating to an intermediate completion date or time prior to Substantial Completion of all Work.
44. Modification: Same as Contract Modification.
45. Not in Contract: Work that is outside the scope of Work to be performed by Contractor under Contract Documents.
46. Notice of Completion: Shall have the meaning provided in California Civil Code Section 3093, and any successor statute.
47. Off Site: Outside geographical location of the Project.
48. Owner: The District.
49. Owner-Furnished, Contractor-Installed: Items furnished by Owner at its cost for installation by Contractor at its cost under Contract Documents.
50. Owner's Representative(s): See Document 00520 (Agreement).
51. Partial Utilization: Use by Owner of a substantially completed part of the Work for the purpose for which it is intended (or a related purpose) prior to Substantial Completion of all of the Work.
52. PCBs: Polyclorinated byphenyls.
53. Phase: A specified portion of the Work (if any) specifically identified as a Phase in Document 00520 (Agreement) or Document 01100 (Summary).
54. Product Data: That information (brochures, catalog sheets, manufacturer's cut sheets, etc.) supplied by vendors having technical and commercial characteristics of the supplied equipment or materials and accompanying commercial terms such as warranties, instructions, and manuals.
55. Progress Report: A periodic report submitted by Contractor to Owner with progress payment invoices accompanying progress schedule. See Section 01320 (Progress Schedules and Reports) and Document 00700 (General Conditions).
56. Project: Total construction of which Work performed under Contract Documents may be whole or part.
57. Project Float: As defined in paragraph 1.2.B.3, Section 01320 (Progress Schedules and Reports).
58. Project Manual: Project Manual consists of Bidding Requirements, Agreement, Bonds, Certificates, Contract Conditions, Drawings, and Specifications.

59. Project Record Documents: All Project deliverables required under Sections 01700 et seq., including without limitation, as-built drawings; Project Record Specifications; Installation, Operation, and Maintenance Manuals; and Machine Inventory Sheets.
60. Provide: Furnish and install.
61. Request for Information ("RFI"): A document prepared by Contractor requesting information regarding the Project or Contract Documents as provided in Section 01250 (Modification Procedures). The RFI system is also a means for Owner to submit Contract Document clarifications or supplements to Contractor.
62. Request for Proposals ("RFP"): A document issued by Owner to Contractor whereby Owner may initiate changes in the Work or Contract Time as provided in Contract Documents. See Section 01250 (Modification Procedures).
63. Request for Substitution ("RFS"): A document prepared by Contractor requesting substitution of materials as permitted and to the extent permitted in Contract Documents. See Section 01600 (Product Requirements).
64. RFI-Reply: A document consisting of supplementary details, instructions, or information issued by Owner that clarifies or supplements Contract Documents, and with which Contractor shall comply. RFI-Replies do not constitute changes in Contract Sum or Contract Time except as otherwise agreed in writing by Owner. RFI-Replies will be issued through the RFI administrative system.
65. Samples: Physical examples of materials, equipment, or workmanship that are representative of some portion of the Work and which establish the standards by which such portion of the Work will be judged.
66. Sanitation Standards: The Sonoma County Water Agency Design and Construction Standards for Sanitation Facilities.
67. Shop Drawings: All drawings, diagrams, illustrations, schedules, and other data or information which are specifically prepared or assembled by or for Contractor and submitted by Contractor to illustrate some portion of the Work.
68. Shown: As indicated on Drawings.
69. Site: The particular geographical location of Work performed pursuant to Contract Documents.
70. Specifications: The written portion of the Contract Documents consisting of requirements for materials, equipment, construction systems, standards, and workmanship for the Work; performance of related services; and are contained in Divisions 1 through 16.
71. Specified: As written in Specifications.
72. Subcontractor: A person or entity that has a direct contract with Contractor to perform a portion of the Work at the Site. The term "Subcontractor" is referred to throughout the Contract Documents as if singular in number and neutral in gender and means a Subcontractor or an authorized representative of the Subcontractor. The term "Subcontractor" does not include a separate contractor or subcontractors of a separate contractor.
73. Substantial Completion: The Work (or a specified part thereof) has progressed to the point where, in the opinion of Owner as evidenced by a Certificate of Substantial Completion, the Work is sufficiently complete, in accordance with Contract Documents, so that the Work (or specified part) can be utilized for the purposes for which it is

intended; or if no such certificate is issued, when the Work (or specified part) is complete and ready for final payment as evidenced by written recommendation of Owner for final payment. The terms "Substantially Complete" and "Substantially Completed" as applied to all or part of the Work refer to Substantial Completion thereof.

74. Superintendence: Executive oversight and charge of the main aspects of construction, including scheduling, sequence of subcontractor Work, and quality control.
75. Supplemental Instruction: A written directive from Owner to Contractor ordering alterations or Modifications that do not result in change in Contract Sum or Contract Time, and do not substantially change Drawings or Specifications. See Section 01250 (Modification Procedures).
76. Testing and special inspection agency: An independent entity engaged by Owner to inspect and/or test the workmanship, materials, or manner of construction of buildings or portions of buildings, to determine if such construction complies with the Contract Documents and applicable codes.
77. Underground Facilities: All pipelines, conduits, ducts, cables, wires, manholes, vaults, tanks, tunnels or other such facilities or attachments, and any encasements containing such facilities that have been installed underground to furnish any of the following services or materials: Electricity, gases, chemicals, steam, liquid petroleum products, telephone or other communications, cable television, sewage and drainage removal, traffic or other control systems, or water.
78. Unit Price Work: Shall be the portions of the Work for which a unit price is provided in Document 00520 (Agreement) or Section 01100 (Summary).
79. Work: The entire completed construction, or the various separately identifiable parts thereof, required to be furnished under the Contract Documents within the Contract Time. Work includes and is the result of performing or furnishing labor and furnishing and incorporating materials and equipment into the construction, and performing or furnishing services and furnishing documents, all as required by the Contract Documents including everything shown in the Drawings and set forth in the Specifications. Wherever the word "work" is used, rather than the word "Work," it shall be understood to have its ordinary and customary meaning.

PART 2 PRODUCTS – NOT USED

PART 3 EXECUTION – NOT USED

END OF SECTION

SECTION 01450

QUALITY CONTROL

PART 1 GENERAL

1.1 SECTION INCLUDES

A. Contractor's Quality Control
B. Quality of the Work
C. Inspections and Tests by Governing Authorities
D. Inspections and Tests by Serving Utilities
E. Inspections and Tests by Manufacturer's Representatives
F. Tests and Inspections by Owner or Owner's Independent Testing and Inspection Agency
G. Additional Testing and Inspection

1.2 CONTRACTOR'S QUALITY CONTROL

A. Contractor's Quality Control: Ensure that products, services, workmanship, and Site conditions comply with requirements of Drawings and Specifications by coordinating, supervising, testing, and inspecting the Work and by utilizing only suitably qualified and appropriately audited, licensed, or trained personnel.
B. Quality Requirements: Work shall be accomplished in accordance with quality requirements of Drawings and Specifications, including, by reference, all codes, laws, rules, regulations, and standards. When no quality basis is prescribed, the quality and testing procedures shall be in accordance with the best-accepted practices of the construction industry for the locale of the Project, for projects of this type, or standards set by engineering or technical societies (e.g., ASTM or ASHRAE), whichever is more stringent.
C. Quality Control Personnel: Employ and assign knowledgeable and skilled personnel as necessary to perform quality control functions to ensure that the Work is provided as required.
D. At Contractor's expense, Contractor may employ a certified independent testing agency to perform compaction tests where there is disagreement. Owner may consider such tests, but will have the authority to make the final determination of relative compaction.
E. At Contractor's expense, Contractor may employ a certified independent welding inspection agency to perform welding inspections. Owner may consider such tests, but will have the authority to make the final determination of welding quality.

1.3 QUALITY OF THE WORK

A. Quality of Products: Unless otherwise indicated or specified, all products shall be new, free of defects, and fit for the intended use.
B. Quality of Installation: All Work shall be produced plumb, level, square and true, or true to indicated angle, and with proper alignment and relationship between the various elements, as indicated or required by Contract Documents.
C. Protection of Completed Work: Take all measures necessary to preserve completed Work free from damage, deterioration, soiling, and staining, until acceptance by Owner.
D. Standards and Code Compliance and Manufacturer's Instructions and Recommendations: Unless more stringent requirements are indicated or specified, comply with manufacturer's instructions and recommendations, reference standards and building code research report requirements in preparing, fabricating, erecting, installing, applying, connecting, and finishing Work.

E. Deviations from Standards and Code Compliance and Manufacturer's Instructions and Recommendations: Secure Owner's advance written consent. Document and explain all deviations from reference standards and building code research report requirements and manufacturer's product installation instructions and recommendations, including acknowledgement by the manufacturer that such deviations are acceptable and appropriate for the Project.

F. Verification of Quality: Work shall be subject to verification of quality by Owner in accordance with provisions of the Contract Documents.
   1. Cooperate by making Work available for inspection.
   2. Such verification may include mill, plant, shop, or field inspection as required.
   3. Provide access to all parts of the Work, including plants where materials or equipment are manufactured or fabricated.
   4. Provide all information and assistance as required, including that by and from subcontractors, fabricators, materials suppliers and manufacturers, for verification of quality by Owner.
   5. Applicable provisions of the Contract Documents shall govern Contract Modifications, if any, resulting from such verification activities.

G. Observations by Owner's Consultants: Periodic and occasional observations of Work in progress will be made by Owner and Owner's consultants as deemed necessary to review progress of Work and general conformance with design intent.

H. Limitations on Inspection, Test, and Observation: Neither employment of independent testing and inspection agency nor observations or tests by Owner and Owner's consultants shall in any manner relieve Contractor of obligation to perform Work in full conformance to all requirements of Contract Documents.

I. Owner's Acceptance and Rejection of Work: Owner reserves the right to reject all Work not in conformance with the requirements of the Drawings and Specifications, or otherwise Defective.

J. Correction of Defective Work: Defective Work shall be modified, replaced, repaired or redone by the Contractor at no change in Contract Sum or Contract Time.

K. Acceptance of Defective Work: Acceptance of Defective Work, without specific written acknowledgement and approval of Owner, shall not relieve the Contractor of the obligation to correct such Work.

L. Contract Adjustment for Defective Work: Should Owner determine that it is not feasible or in Owner's interest to require Defective Work to be repaired or replaced, an equitable reduction in Contract Sum shall be made by agreement between Owner and Contractor. If equitable amount cannot be agreed upon, a Construction Change Directive will be issued and the amount in dispute resolved in accordance with applicable provisions of Document 00700 (General Conditions).

M. Non-Responsibility for Defective Work: Owner and Owner's consultants disclaim any and all responsibility for Work produced not in conformance with the Drawings and Specifications.

N. Responsibility for Defective Work: Contractor shall have full responsibility for all consequences resulting from Defective Work, including without limitation all delays, disruptions, extra inspection and correction costs by Contractor and Owner and re-Work, and extra time and costs of all types. Contractor waives excuses for Defective Work relating to Owner's prior review of Submittals and/or prior failure to notice Defective Work in place on inspection.

1.4 INSPECTIONS AND TESTS BY GOVERNING AUTHORITIES

A. Regulatory Requirements for Testing and Inspection: Comply with UBC requirements and all other requirements of governing authorities having jurisdiction.
B. Inspections and Tests by Governing Authorities: Cause all tests and inspections required by governing authorities having jurisdiction to be made for Work under this Contract.
   1. Such authorities may include, but are not limited to PRMD, Fire Department, and similar agencies.
   2. Except as specifically noted, scheduling, conducting and paying for such inspections shall be solely the Contractor's responsibility.

1.5 INSPECTIONS AND TESTS BY SERVING UTILITIES

A. Inspections and Tests by Serving Utilities: Cause all tests and inspections required by serving utilities to be made for Work under this Contract. Scheduling, conducting, and paying for such inspections shall be solely the Contractor's responsibility.

1.6 INSPECTIONS AND TESTS BY MANUFACTURER'S REPRESENTATIVES

A. Inspections and Tests by Manufacturer's Representatives: Cause all tests and inspections specified to be conducted by materials or systems manufacturers to be made. Additionally, all tests and inspections required by materials or systems manufacturers as conditions of warranty or certification of Work shall be made, the cost of which shall be included in the Contract Sum.

1.7 TESTS AND INSPECTIONS BY OWNER OR OWNER'S INDEPENDENT TESTING AND INSPECTION AGENCY

A. Owner may conduct or Owner may select an independent testing and inspection agency or agencies to conduct tests and inspections as indicated on Drawings, in Specifications, and as required by governing authorities having jurisdiction.
B. Responsibility for payment for such tests and inspections shall be as indicated in paragraph 1.7D below. All time and costs for Contractor's service related to such tests and inspections shall be included in Contract Time and Contract Sum.
C. Contractor shall pay for all additional charges by testing and inspection agencies and governing authorities having jurisdiction due to the following:
   1. Contractor's failure to properly schedule or notify testing and inspection agency or authorities having jurisdiction.
   2. Changes in sources, lots, or suppliers of products after original tests or inspections.
   3. Changes in means, methods, techniques, sequences, and procedures of construction that necessitate additional testing, inspection, and related services.
   4. Changes in mix designs for concrete and mortar after review and acceptance of submitted mix design.
   5. Contractor-submitted requests to change materials or products, which are accepted, but require testing and/or reinspection beyond original design.
D. In addition to tests to be performed by Contractor (and to be paid by Contractor) as required elsewhere in Contract Documents, tests and special inspections that may be performed by Owner or Owner's independent testing and inspection agency or agencies and paid by Owner include, but are not limited to, the following:

SECTION	TESTS
02300	Relative compaction
"	Sieve analysis
"	Sand equivalence
"	Durability index
"	Liquid limit
"	Plasticity index
02316	Relative Compaction
03002	Concrete slump
"	Concrete compressive strength
"	Grout compressive strength

E. Owner may perform tests at any time at its discretion.

F. California Test Method No. 216 (Relative Compaction of Untreated and Treated Soils and Aggregates) and 231 (Relative Compaction of Untreated/Treated Soils and Aggregates [Area Concept Utilizing Nuclear Gauges]) may be modified as follows:
   1. In lieu of the specified 10-pound hammer, a Test Lab Model No. F-590 Mechanical Compactor (or equal) with a 10-pound hammer will be used.
   2. In lieu of the specified split cylindrical mold, a non-split cylindrical mold of the same diameter and wall thickness will be used.
   3. Any of the provisions of Test Method No. 216 which conflict with the use of such equipment described in (1) and (2) are considered void to the extent they preclude the use of such equipment.
   4. In lieu of the specified test form, an Owner standard form will be used.
   5. Correction for oversize material may be obtained from a table based upon the given equations and the coefficient for +3/4-inch aggregate will be computed from the following formulae:

      $Y = 1.0$ for $P = 10$ to 20
      $Y = 1.0 - .002 (P - 20)$ for $P = 20$ to 50

      where:

      Y = coefficient for 3/4" aggregate
      P = percent retained on 3/4" screen

   6. In lieu of the sand cone method of determination of in-place density, the method described in Part 1 of California Test Method 231 will be used except that the mode of operation and the probe depth will be determined by Owner.
   7. In-place density and relative compaction will be determined on the basis of individual test sites in lieu of the area concept.

G. Test and Inspection Reports: After each inspection and test by an independent testing and inspection agency or agencies, one copy of report shall be promptly submitted to Owner, who will distribute copies to Contractor and any agency having jurisdiction (if required by Code).
   1. Reports shall clearly identify the following:
      a. Date issued.
      b. Project name and number.
      c. Identification of product and Specifications Section in which Work is specified.
      d. Name of inspector.

e. Date and time of sampling or inspection.
f. Location in Project where sampling or inspection was conducted.
g. Type of inspection or test.
h. Date of test.
i. Results of tests.
j. Comments concerning conformance with Contract Documents and other requirements.

2. Test reports shall indicate specified or required values and shall include statement whether test results indicate satisfactory performance of products.
3. Samples taken but not tested shall be reported.
4. Test reports shall confirm that methods used for sampling and testing conform to specified test procedures.
5. When requested, testing and inspection agency shall provide interpretations of test results.

H. Contractor Responsibilities for Inspections and Tests:
1. Unless specified otherwise, notify Owner and testing agency 72 hours in advance of expected time of each test and inspection, and for all other operations requiring inspection and testing services, by submitting Contractor's inspection request in writing (or, if Owner provides a specific form, on that form).
   a. When tests or inspections cannot be performed after such notice, due to Contractor's negligence, reimburse Owner for testing and inspection agency personnel and travel expenses incurred.
2. Deliver to laboratory or designated location, adequate samples of materials proposed to be used that require advance testing, together with proposed mix designs.
3. Cooperate with testing and inspection agency personnel, Owner, and Owner's consultants. Provide access to Work areas and off-Site fabrication and assembly locations, including during weekends and after normal Work hours.
4. Provide incidental labor and facilities to provide safe access to Work to be tested and inspected, to obtain and handle Samples at the Site or at source of products to be tested, and to store and cure test Samples.
5. Provide, at least 15 Days in advance of first test or inspection of each type, a schedule of tests or inspections indicating types of tests or inspections and their scheduled dates.

1.8 ADDITIONAL TESTING AND INSPECTION

A. If initial tests or inspections made by Owner or the testing and inspection agency reveal that materials do not comply with Contract Documents, or if Owner has reasonable doubt that materials do not comply with Contract Documents, additional tests and inspections shall be made as directed.
1. If additional tests and inspections establish that materials comply with Contract Documents, Owner shall pay all costs for such tests and inspections.
2. If additional tests and inspections establish that materials do not comply with Contract Documents, all costs of such tests and inspections shall be deducted from Contract Sum.
3. If Work requiring inspection is covered by follow-on or follow-up Work before it is inspected, uncover Work so proper inspections can be performed. All costs of such tests and inspections shall be deducted from Contract Sum.

PART 2 PRODUCTS – NOT USED

PART 3 EXECUTION – NOT USED

END OF SECTION

SECTION 01500

TEMPORARY FACILITIES AND CONTROLS

PART 1 GENERAL

1.1 SUMMARY

A. Section Includes:
1. Temporary Electricity
2. Temporary Telephone
3. Temporary Water
4. Temporary Sanitary Facilities
5. Temporary Barriers and Enclosures
6. Tree and Plant Protection
7. Water Control
8. Noise Control
9. Traffic Control/Management
10. Project Funding Sign
11. Storm Water Pollution Prevention Plan
12. Removal of Temporary Facilities and Controls

1.2 DEFINITIONS

A. Dripline: The area on the ground from the trunk of any tree to the point directly below the outermost tips of the foliage of that tree.
B. Tree Protection Zone (TPZ): A space above and below ground within which trees are to be retained and protected. May extend beyond the dripline when practical.
C. Tree damage: Tree damage shall include, but not be limited to, the following: significant injury to the root system or other parts of a tree including burning, application of toxic substances, damaging through contact with equipment or machinery, changing the natural grade within the TPZ, compacting the soil within the TPZ, interfering with the normal water requirements of the tree, unauthorized trenching or excavating within the TPZ, or unauthorized removal of more than 1/3 of the live wood, foliage, or roots.

1.3 SUBMITTALS

A. Traffic Control/Management Plan.
B. Project Funding Sign layout and colors.

1.4 TEMPORARY ELECTRICITY

A. Provide, maintain, and pay for electrical power at the Site for construction purposes.

1.5 TEMPORARY TELEPHONE

A. Provide, maintain, and pay for telephone service to field office at time of Project mobilization.

1.6 TEMPORARY WATER

A. Contractor may use Owner-provided, non-potable water from hose bibbs and monitors as directed by Owner for use on this Project. Hose bibbs marked #2 provide Owner's, non-chlorinated well water. Hose bibbs marked #3 provide Owner's, chlorinated treated effluent water. Contact Owner three Days prior to commencement of Work to coordinate

using Owner's water. The water shall not be used for drinking. The chlorinated, treated effluent water may be used only for purposes approved by Owner. Should Owner determine, in its sole discretion, that Contractor's use of Owner's water is excessive, Owner may terminate water delivery. No other Owner-provided water will be made available to Contractor for this Project.

1.7 TEMPORARY SANITARY FACILITIES

A. Provide and maintain required temporary buildings with sanitary toilets for use of all workers.
B. Comply with all minimum requirements of the Health Department or other public agency having jurisdiction; maintain in a sanitary condition at all times.

1.8 TEMPORARY BARRIERS AND ENCLOSURES

A. Provide barriers to prevent unauthorized entry to construction areas, to allow for Owner's use of Site, and to protect existing facilities and adjacent properties from damage from construction operations.
B. Provide barricades required by governing authorities to control public access to existing buildings.
C. Protect vehicular traffic, stored materials, Site, and structures from damage.
D. Install orange polyethylene temporary construction fence as indicated.

1.9 TREE AND PLANT PROTECTION

A. Root protection:
   1. No storage of materials or equipment will be allowed within the TPZ.
   2. Whenever possible, excavation shall be on a radial line, diverging from the tree trunk.
B. Exposure to harmful substances: No storage or dumping of any substances that may be harmful to trees shall occur at any location on the Site.
C. Where construction is to be performed in the vicinity of trees and shrubbery, the Work shall be carried on in a manner that will cause minimum damage. Owner will designate trees that are to be removed. Under no circumstances are additional trees to be removed without written permission from Owner. Trees and shrubbery that are not to be removed shall be protected from injury or damage resulting from Contractor's operations.
D. All damage shall be immediately reported to Owner, who will file a report so that penalties may be determined.
E. Any tree that is removed without Owner's permission or is irreparably damaged, in the opinion of Owner, shall cost Contractor $27.00 per square inch of cross section, measured at 4 ½ feet above ground, but not less than $250.00, such cost to be deducted from monies due or to become due under the Contract. If tree protection is not performed or is not performed adequately, and Owner determines that a tree has been irreparably damaged, Owner will impose the same penalty as for unauthorized removal of a tree.

1.10 WATER CONTROL

A. See Section 02300 (Earthwork) for information on ground water control.
B. Maintain excavations free of water.
C. Protect Site from puddling or running water.
D. Provide water barriers as required to protect Site from soil erosion.

1.11 NOISE CONTROL

A. When required by OSHA Standards, construction workers shall be provided with ear protection to operate equipment.
B. Ensure that all construction equipment and vehicles used for the Work are equipped with properly installed engine mufflers where applicable.
C. Locate stationary noise-generating equipment, including hammer bore and drill rigs, as far as possible from nearby noise-sensitive receptors. Stationary noise sources located within 500 feet of noise-sensitive receptors shall be equipped with noise reducing engine housings, and the line of sight between such sources and nearby sensitive receptors shall be blocked by portable acoustic barriers.
D. Ensure that construction equipment with internal combustion engines have sound control devices at least as effective as those provided by the original equipment manufacturer. No equipment shall be permitted to have an un-muffled exhaust.
E. Limit construction activities within unincorporated areas to between the hours depending upon the jurisdiction.
F. Notify residences and other sensitive receptors within 200 feet of a construction area of the construction schedule in writing, at least two weeks prior to the commencement of construction activities. This notice shall indicate the allowable hours of construction activities as specified by the applicable local jurisdiction. Designate a noise disturbance coordinator responsible for responding to complaints regarding construction noise. The coordinator shall determine the cause of the complaint and ensure that reasonable measures are implemented to correct the problem. A contact number for the noise disturbance coordinator shall be conspicuously placed on construction Site fences and entrances and included in the construction schedule notification sent to nearby residences and sensitive receptors.

1.12 TRAFFIC CONTROL/MANAGEMENT

A. Notification:
   1. At least 14 Days prior to commencement of Work, notify residents along the Project roadways, in writing, that traffic flows will be subject to detours and/or delays, and that access to individual driveways may be disrupted during working hours. Provide notice to Owner.
   2. At least 7 Days prior to commencement of Work, post the Project area to inform drivers of impending construction Work and likely delays and detours.
   3. Coordinate vehicular access with Owner at least 7 Days prior to commencement of Work.
   4. If any applicable permits require Contractor to notify residents or any organization of traffic detours or delays, provide such notice(s) to Owner.
B. Traffic Control Measures:
   1. Traffic control and safety precautions shall conform with the Caltrans "Manual on Uniform Traffic Control Devices (MUTCD) 2003, as amended by the MUTCD California Supplement, and with these Specifications.
   2. Pay for all costs for traffic signage, including flagging.
   3. Provide safe passage for vehicular and pedestrian traffic through the Work at all times.
   4. Traffic on two-lane streets may be reduced to one lane provided that, with all restriction of traffic flow, flaggers, cones, signs, and barricades are furnished as required by Owner. Permit the traffic equal flow time in each direction.

5. Maintain access to public and private buildings, businesses and driveways. Provide approved metal "bridge" or temporary backfill for access when and where required within ½ hour after request by Owner except that emergency vehicles and personnel shall be provided immediate access at all times.
6. Restore access to all residences for all non-working hours, holidays, and weekends.

C. Maintain traffic control measures:
1. Maintain traffic control through the Site and provide local access as specified herein regardless of rain or other causes, either within or beyond the control of Contractor that may force suspension or delay of the Work. At all times keep on the Site such materials, labor forces, and equipment as may be necessary to keep the streets and driveways within the Site open to traffic and in good repair. Expedite the passage of such traffic, using such labor forces and equipment as may be necessary.

D. Traffic Control/Management Plan:
1. Include a discussion of haul routes, limits on the length of open trench, work area delineation, traffic control and flagging;
2. Identify all access and parking restriction, pavement markings and signage requirements (e.g., speed limit, temporary loading zones);
3. Layout a plan for notifications and a process for communication with affected residents and businesses prior to the start of construction. Advance public notification shall include posting of notices and appropriate signage of construction activities. The written notification shall include the construction schedule, the exact location and duration of activities within each street (i.e., which lanes and access point/driveways would be blocked on which days and for how long), and a toll-free telephone number for receiving questions or complaints;
4. Include a plan to coordinate all construction activities with emergency service providers in the area at least one month in advance. Emergency service providers shall be notified of the timing, location, and duration of construction activities. All roads shall remain passable to emergency service vehicles at all times;
5. Include a plan to coordinate all construction activities with the appropriate local school district at least two months in advance. The school district shall be notified of the timing, location, and duration of construction activities. Coordinate with the appropriate local school district to identify peak circulation periods at schools along the alignment(s) (i.e., the arrival and departure of students), and require their contractor to avoid construction and lane closures during those periods. The construction contractor for each project component shall be required to maintain vehicle, pedestrian, and school bus service during construction through inclusion of such provisions in the construction contract. The assignment of temporary crossing guards at designated intersections may be needed to enhance pedestrian safety during project construction;
6. Include the requirement that all open trenches be covered with metal plates at the end of each workday to accommodate traffic and access; and
7. Specify the street restoration requirements pursuant to agreements with the local jurisdictions.

1.13 PROJECT FUNDING SIGN

A. General:
1. Provide and place the Project funding signs as indicated and as specified herein and subsequently remove and dispose of the signs Off Site after Final Acceptance.

B. Contents of Project Sign:
   1. The sign shall have the logos of the following organizations or programs:
      a. North Bay Water Reuse Authority (to be provided by Owner)
      b. U.S. Bureau of Reclamation
      c. ARRA
   2. The sign shall have the following text:
      a. Owner Name: Sonoma Valley County Sanitation District
         1) Letter size: 4 ½ inches
      b. Project Name: North Bay Water Reuse Project – Sonoma Valley Effluent Reservoir R5.
         1) Letter size: 6 inches.
      c. Sonoma Valley County Sanitation District: 24 Hour Emergency Phone No. (707) 523-1070.
         1) Letter size: 3 inches
      d. Contractor: (XXX) XXX-XXXX 24 Hour Emergency Phone No. (XXX) XXX-XXXX
         1) Letter size: 3 inches
C. Products:
   1. Face of sign: Douglas fir exterior plywood, grade A/C-X or better.
   2. Posts: Rough No. 2 Douglas fir or better.
   3. Paint:
      a. Primer: White exterior latex primer, such as Moore Craft, as manufactured by Benjamin Moore Paints, or Approved Equal.
      b. Paint:
         1) Background: Flat white latex paint, such as Moore Guard, as manufactured by Benjamin Moore Paints, or Approved Equal.
         2) Logos: Provide various colors to support logos as listed in 1.13B.1 of this Section 01500.
      c. Lettering: Soft-gloss black latex paint, such as Moore Glo, as manufactured by Benjamin Moore Paints, or Approved Equal.
D. Execution:
   1. Sign construction: Embed posts as indicated into the ground in holes backfilled with clean, dry sand compacted to 95% relative compaction by jetting or ponding. Center posts on the backside of the sign. Secure plywood to each post with 8 evenly spaced 16d galvanized nails.
   2. Paint all exposed parts of the posts and both sides of the plywood with one coat of primer. Paint the front of the sign with two additional coats of paint.
   3. Lettering: Helvetica medium, of the sizes and wording in Paragraph 1.13B.2 of this Section 01500.
   4. Placement and removal: Place sign before any other construction commences. Remove sign after the final inspection.
   5. Location of Project identification sign as indicated is approximate only. Owner will determine exact location of sign.
   6. No other signs are allowed without Owner's permission except those required by law.

1.14 STORM WATER POLLUTION PREVENTION PLAN

A. Prior to commencement of Work at the Site, obtain Owner approval on a Storm Water Pollution Prevention Plan (SWPPP) prepared in accordance with:
   1. The Caltrans Storm Water Quality Handbooks:

a. Storm Water Pollution Prevention Plan (SWPPP) and Water Pollution Control Program (WPCP) Preparation Manual; and
b. Construction Site Best Management Practices (BMPs) Manual.

2. State Water Resources Control Board (SWRCB), Order No.–2009-0009–DWQ, National Pollutant Discharge Elimination System (NPDES), General Permit for Storm Water Discharges Associated with Construction and Land Disturbance Activities (Construction General Permit). The permit is available at Owner's office or is available online at: http://www.swrcb.ca.gov/water_issues/programs/stormwater/constpermits.shtml. The requirements of this order replace and supersede State Water Board Orders No 99-08-DWQ and 2003-0007-DWQ.

B. Develop and implement a monitoring program in accordance with the requirements of the General Permit to verify compliance with the General Permit.
C. Submit SWPPP to Owner for review in accordance with Section 01330 (Submittal Procedures). Provide the SWPPP to Owner prior to commencement of Work at the Site.
D. The SWPPP shall include all of the requirements in paragraphs 1.12A, 1.12B, and 1.12C of this Section 01500. Particular attention shall be paid to:
1. Site Map
2. Locations of all equipment and materials storage
3. Location and containment for fueling area, construction entrances, and concrete washouts
4. Locations of all other staging areas, stockpile areas, and disposal sites.
5. Location of sanitation facilities
6. All erosion and sediment control BMPs, as well as non-storm water BMPs
7. Dewatering plan

E. Water Pollution Control Drawings shall be of sufficient size and scale to detail BMP locations. Remove all extraneous information from the base sheets to improve clarity, including geometric equations, notes, details, and all data not related to water pollution control work. Use a copy of the appropriate Drawing(s) as a base sheet(s) with the pertinent stage of construction drawn in as an overlay to accurately reflect Site conditions at various phases of construction. Provide enlarged detail mapping as necessary to detail BMP locations.
F. Revise and update the SWPPP whenever there is a change in construction operations that may affect the Site drainage patterns or discharge of pollutants to surface waters, groundwaters, or a separate municipal storm sewer system.
G. Failure to fully comply with the requirements of the General Permit shall subject Contractor to all fines, damages, and job delays incurred due to failure to implement the SWPPP.
H. Keep a copy of the General Permit, together with updates and revisions at the Site. Furnish SWPPP to Owner upon Owner's request.

1.15 REMOVAL OF TEMPORARY FACILITIES AND CONTROLS

A. Remove temporary utilities, equipment, facilities, and materials prior to final inspection.
B. Remove underground installations to a minimum depth of 3 feet below design grade.
C. Clean and repair damage caused by installation or use of temporary Work.
D. Restore existing facilities used during construction to original condition. Restore permanent facilities used during construction to specified condition.

PART 2 PRODUCTS – NOT USED

PART 3 EXECUTION – NOT USED

END OF SECTION

SECTION 01540

SITE SECURITY AND SAFETY

PART 1 GENERAL

1.1 SUBMITTALS

A. Safety Program.
B. Fire Protection Plan.

1.2 PROTECTION

A. Continuously maintain protection as necessary to protect the Work, as a whole and in part, and adjacent property and improvements from accidents, injuries or damage.
B. Properly protect the Work:
   1. With lights, guard rails, temporary covers and barricades.
   2. Enclose excavations with proper barricades.
   3. Brace and secure all parts of the Work against storm and accident.
   4. Provide such additional forms of protection that may be necessary under existing circumstances.
C. Provide and maintain in good condition all protective measures required to adequately protect the public from hazards resulting from the Work and to exclude unauthorized persons from the Work. When regulated by Building Code, Cal OSHA, or other authority, such legal requirements for protection shall be considered as minimum requirements. Be responsible for the protection in excess of such minimum requirements as required.

1.3 CONTROL OF SITE

A. Ensure that no alcohol, firearms, weapons, or controlled substance enters or is used at the Site. Immediately remove from the Site and terminate the employment of any employee found in violation of this provision.

1.4 SAFETY PROGRAM

A. Prior to starting any Work at the Site, submit a Safety Program that has been reviewed and approved by an Industrial Hygienist certified by the American Board of Industrial Hygiene or by a Certified Safety Professional. The Safety Program shall include the name, certification number, and certification seal of the Industrial Hygienist or Certified Safety Professional. Comply with the Safety Program and all applicable federal, state, and local regulation codes, rules, law and ordinances.
B. Receipt and/or review of the Safety Program by Owner, Engineer or Owner's Representative shall not relieve Contractor of any responsibility for complying with all applicable safety regulations.
C. It is essential that Contractor and each Subcontractor implement an effective and vigorous Safety and Health Program to cover their respective portions of the Work. Subject to Contractor's overall responsibility for Project safety, it shall be understood that the full responsibility for providing a safe place to work with respect to their respective portions of the Work rests with each individual Contractor and Subcontractor.
D. Safety Program components:
   1. Injury and Illness Prevention Program (IIPP): Conforming to the General Industrial Safety Orders (CCR Title 8, Division 1, Chapter 4, Subchapter 7, Section 3203), and the California Labor Code (Section 6401.7).

2. Site-Specific Safety and Health Plan (SSHP): Describing health and safety procedures that shall be implemented during the Work in order to ensure safety of the public and those performing the Work. Follow the guidelines for a SSHP listed in CCR Title 8, Division 1, Chapter 4, Subchapter 7, Section 5192, Item (b)(4) f.
3. Confined Space Program:
   a. The Site contains permit- and non-permit-confined spaces. Owner will provide Contractor with any available information regarding existing permit space hazards, entry operations, and safety information relating to Work in the existing permit spaces as set forth in the General Industrial Safety Orders (CCR Title 8, Division 1, Chapter 4, Subchapter 7, Section 5157).
   b. Permit space entry is allowed only through compliance with a permit space program meeting the requirements of Section 5157 of the General Industrial Safety Orders. During entry operations, or at the conclusion of entry operations, verbally notify Owner of the permit space program followed and of any hazards confronted or created in permit spaces during entry operations.

E. The wearing of hard hats shall be mandatory at all times for personnel on Site. Supply sufficient hard hats to equip properly all employees and visitors.

F. Whenever an exposure exists, appropriate personal protective equipment (PPE) shall be used by all affected personnel. Supply PPE to all personnel under Contractor's direction.

1.5 SAFETY REQUIREMENTS

A. Standards: Maintain the Project in accordance with state and local safety and insurance standards.

B. Hazards Control:
   1. Store volatile wastes in covered metal containers and remove from premises daily.
   2. Prevent accumulation of wastes that create hazardous conditions.
   3. Provide adequate ventilation during use of volatile or noxious substances.

C. Conduct cleaning and disposal operations to comply with local ordinances and anti-pollution laws.
   1. Do not burn or bury rubbish or waste material on the Site.
   2. Do not dispose of volatile wastes such as mineral spirits, oil, or paint thinner in storm or sanitary drains.
   3. Do not dispose of wastes into streams or waterways.

D. Provide accident information on the forms provided by Contractor. This information shall be provided on the same Day as the occurrence of said incident.

1.6 SITE SAFETY OFFICER

A. Designate one of Contractor's staff as "Site Safety Officer" whose duties shall include the responsibility for enforcing the environmental protection provisions of the Contract Documents including safety and health, the requirements of the Occupational Safety and Health Act, and other applicable federal, state and local standards. Submit for review by Owner Contractor's intended traffic flow plan, security plan, program for temporary structures, housecleaning plan, demolition program, and environmental safety and health plan. After review by Owner, the implementation and enforcement of these plans shall become the responsibility of the Site Safety Officer. Any changes in the plans shall be requested by Contractor through the Site Safety Officer for written concurrence by Owner.

B. Owner's risk management representative(s) shall be allowed access to accident/injury and illness reports, inspection reports, scheduling and construction meetings, and safety meetings.

1.7 FIRE PROTECTION PLAN

A. Prior to starting any Work at the Site, submit a fire protection plan that has been reviewed and approved by the Schell-Vista Fire Protection District. It is recommended that the plan include, but not be limited to, a discussion of the following items:
   1. Equipment spark arresters
   2. Fire-extinguishing equipment on hand
   3. Method of operation in case of fire
   4. Notification to authorities of any fire
   5. Access available during performance of Work
   6. Educating workers of fire protection plan
   7. Storage protection for flammable materials
   8. Ventilation and illumination equipment

PART 2 PRODUCTS - NOT USED

PART 3 EXECUTION - NOT USED

END OF SECTION

SECTION 01600

PRODUCT REQUIREMENTS

PART 1 GENERAL

1.1 SECTION INCLUDES

A. Products
B. Product Options and Substitutions
C. Product Delivery Requirements
D. Product Storage and Handling

1.2 PRODUCTS

A. Products: New material, machinery, components, equipment, fixtures, and systems forming the Work. Does not include machinery and equipment used for preparation, fabrication, conveying, and erection of the Work. Products may also include existing materials or components required for reuse.
B. Do not use materials and equipment removed from existing premises, except as specifically permitted by the Contract Documents.
C. For similar components, provide interchangeable components of the same manufacturer.

1.3 PRODUCT OPTIONS AND SUBSTITUTIONS

A. Summary:
   1. This paragraph 1.3 describes procedures for selecting products and requesting substitutions of unlisted materials in lieu of materials named in the Specifications or approved for use in Addenda that were not already the subject of a Document 00660 (Substitution Request Form) submittal as provided in Document 00200 (Instructions to Bidders).
B. For products specified by naming one manufacturer only, Owner believes that the manufacturer listed is capable of producing equipment or products that will satisfy the requirements of the associated Specification. This statement, however, shall not be construed as an endorsement of a particular manufacturer's product, nor shall it be construed that a named manufacturer's standard product will comply with the requirements of the associated Specification. In such cases, the Owner is not aware of an equal manufacturer.
C. Contractor's Options:
   1. For products specified only by reference standard: Select any product meeting that standard.
   2. For products specified by naming one or more products or manufacturers:
      a. Select products of any named manufacturer meeting Specifications.
      b. If product becomes unavailable due to no fault of Contractor or if the product specified no longer complies with local regulations or laws, submit Request for Substitution (RFS), including all information contained in this Section 01600 and a fully executed Document 00660 (Substitution Request Form), but using the term "Contractor" each place the term "Bidder" appears in that form.
D. Substitutions:
   1. Except as provided in Document 00200 (Instructions to Bidders) with respect to "or Approved Equal" items, Owner will consider Contractor's substitution requests only when product becomes unavailable due to no fault of Contractor or if the product

specified no longer complies with local regulations or laws. Requests for review of proposed substitute items will not be accepted from anyone other than Contractor. The RFS shall state the extent, if any, to which the evaluation and acceptance of the proposed substitute will prejudice Contractor's achievement of Substantial Completion on time, and whether or not acceptance of the substitute for use in the Work will require a change in any of the Contract Documents (or in the provisions of any other direct contract with Owner for work on the Project).

2. Submit separate RFS for each product and support each request with:
   a. Product identification.
   b. Manufacturer's literature.
   c. Samples, as applicable.
   d. Name and address of similar projects on which product has been used, and dates of installation.
   e. Name, address, and telephone number of manufacturer's representative or sales engineer.
   f. For construction methods: Detailed description of proposed method; drawings illustrating methods.
3. Where required, itemize a comparison of the proposed substitution with product specified and list significant variations including, but not limited to dimensions, weights, service requirements, and functional differences. If variation from product specified is not pointed out in submittal, variation will be rejected even though submittal was favorably reviewed. Identify all variations of the proposed substitute from that specified in the RFS and indicate available maintenance, repair, and replacement service.
4. State whether the substitute will require a change in any of the Contract Documents (or provisions of any other direct contract with Owner for work on the Project) to adapt the design of the proposed substitute, and whether or not incorporation or use of the substitute in connection with Work is subject to payment of any license fee or royalty. Submit data relating to changes in construction schedule.
5. Include accurate cost data comparing proposed substitution with product and amount of net change in Contract Sum including, but not limited to, an itemized estimate of all costs or credits that will result directly or indirectly from acceptance of such substitute, including costs of redesign and claims of other contractors affected by the resulting change, all of which will be considered by Owner in evaluating the proposed substitute. Owner may require Contractor to furnish additional data about the proposed substitute.
6. Owner will not consider substitutions for acceptance (or, in Owner's sole discretion, Owner may make Contractor solely responsible for all resulting costs, expenses and other consequences) when a substitution:
   a. Results in delay meeting construction Milestones or completion dates.
   b. Is indicated or implied on submittals without formal request from Contractor.
   c. Is requested directly by Subcontractor or supplier.
   d. Acceptance will require substantial revision of Contract Documents.
   e. Disrupts Contractor's job rhythm or ability to perform efficiently.
7. Substitute products shall not be ordered without written acceptance of Owner.
8. Owner will determine acceptability of proposed substitutions and reserve right to reject proposals due to insufficient information.
9. Accepted substitutions will be evidenced by a Change Order or a CCD. All Contract Document requirements apply to Work involving substitutions.

E. Contractor's Representation and Warranty:
   1. Contractor's RFS constitutes a representation and warranty that Contractor:
      a. Has investigated proposed product and determined that it meets or exceeds, in all respects, specified product.
      b. Will provide the same warranty for substitution as for specified product.
      c. Will coordinate installation and make other changes that may be required for Work to be complete in all respects.
      d. Waives claims for additional costs which may subsequently become apparent.
      e. Will compensate Owner for additional redesign costs associated with substitution.
      f. Will be responsible for Construction Schedule slippage due to substitution.
      g. Will be responsible for Construction Schedule delay due to late ordering of available specified products caused by requests for substitution that are subsequently rejected by Owner.
      h. Will compensate Owner for all costs; including extra costs of performing Work under Contract Documents, extra cost to other contractors, and any claims brought against Owner, caused by late requests for substitutions or late ordering of products.
F. Owner's Duties:
   1. Review Contractor's RFS with reasonable promptness.
   2. Notify Contractor in writing of decision to accept or reject requested substitution.
G. Administrative Requirements:
   1. Specified products, materials, or systems for Project may include engineering or on-file standards required by the regulatory agency. Contractor's substitution of products, materials or systems may require additional engineering, testing, reviews, approvals, assurances, or other information for compliance with regulatory agency requirements or both. Provide all agency approvals or other additional information required and pay additional costs for required Owner services made necessary by the substitution at no increase in Contract Sum or Contract Time, and as a part of substitution proposal.

1.4 PRODUCT DELIVERY REQUIREMENTS

A. Deliver products in accordance with manufacturer's instructions.
B. Promptly inspect shipments to assure that products comply with requirements, quantities are correct, and products are undamaged.

1.5 PRODUCT STORAGE AND HANDLING

A. Store products only in staging area per provisions of Section 01100 (Summary).
B. Handle, store, and protect products in accordance with manufacturer's instructions, with seals and labels intact and legible. Store sensitive products in weather-tight, climate-controlled enclosures.
C. For exterior storage of fabricated products, place on appropriate supports, above ground.
D. Cover products subject to deterioration with impervious sheet covering. Provide ventilation to avoid condensation.
E. Store loose granular materials on solid flat surfaces in a well-drained area.
F. Provide equipment and personnel to store products by methods to prevent soiling, disfigurement, or damage.
G. Arrange storage of products to permit access for inspection. Periodically inspect to assure products are undamaged and are maintained under specified conditions.

PART 2 PRODUCTS - NOT USED

PART 3 EXECUTION - NOT USED

END OF SECTION

SECTION 01740

CLEANING

PART 1 GENERAL

1.1 SUMMARY

A. Section Includes:
   1. Progress Cleaning
   2. Final Cleaning

B. Related Sections:
   1. Section 01500 (Temporary Facilities and Controls)

1.2 PROGRESS CLEANING

A. Perform periodic cleaning to ensure that any streets and other Owner and public properties are maintained free from accumulation of waste materials, dust, mud, and debris.

B. Where required, wet down surfaces to lay dust and prevent the blowing of dust to nearby residences or public properties.

C. Keep all paved roads clean and free of dust, mud, and debris resulting from Contractor's operations. Daily cleanup throughout the job will be necessary as Contractor progresses with its Work, but extra attention to cleanup shall be made prior to weekends and holidays. Without limiting the foregoing, remove trench spoil along traveled ways daily; grade and vacuum broom surfaces initially where applicable and later water flush with high-pressure sprays, being careful to avoid downstream contamination.

D. All dust, mud, spoils, and construction debris shall be removed daily from all roadways, ditches, shoulders, and private property (fills or spoils placed on private property at private property owner's written request excepted).

E. Disposal of Materials:
   1. All waste materials, debris, and rubbish shall be disposed of at sites to be chosen by Contractor in accordance with applicable local, state, and federal regulations.
   2. Contractor is cautioned that the County of Sonoma and cities within the county have regulations governing the disposal of rubble, broken pavement, and similar materials.
   3. Become familiar with the requirements of the agency having jurisdiction over any contemplated disposal site and comply with all such requirements.

F. All excess soil from performance of Work shall be disposed at sites to be chosen by Contractor in accordance with applicable local, state, and federal regulations, and, if applicable, in accordance with Contractor's soil disposal plan. If Contractor elects to dispose of soil on any private property, prior to any such disposal, a letter allowing such disposal shall be obtained from the property owner and presented to Owner. The letter shall state that the property owner has complied with all necessary local, state, and federal laws with respect to disposal on property owner's property. Contractor is advised that the property owner is required to obtain a fill permit from PRMD. Regardless of the location of the disposal area, Contractor shall specify the location in the Storm Water Pollution Prevention Plan (SWPPP) if required under Section 01500 (Temporary Facilities and Controls). Any requirements in the SWPPP that pertain to the area of Work shall also apply to the disposal area. In addition, placement of fill in wetland areas is subject to permit procedures of the US Army Corps of Engineers. At the completion of Work, a letter from

each affected property owner will be required releasing Contractor, Owner, Agency, and any Owner consultant from future liability.

G. If Contractor does not properly clean the Site, in the opinion of Owner, then Owner shall have the option of using outside equipment to perform the cleanup and such cost will be withheld from the Contract Sum.

1.3 FINAL CLEANING

A. Execute final cleaning prior to final inspection, using only properly skilled workers.
B. Remove grease, dust, dirt, stains, labels, fingerprints, and other foreign materials from exposed interior and exterior finished surfaces.
C. Repair, patch, and touch up marred surfaces to match adjacent finishes.
D. Clean interior and exterior surfaces exposed to view: remove temporary labels, stains and foreign substances, polish transparent and glossy surfaces, vacuum carpeted and soft surfaces.
E. Clean equipment and fixtures to a sanitary condition, clean or replace filters of mechanical equipment operated during construction, clean ducts, blowers and coils of units operated without filters during construction.
F. Clean Site.
G. Mechanically sweep paved areas.
H. Remove waste and surplus materials, rubbish, and construction facilities from Site.

PART 2 PRODUCTS – NOT USED

PART 3 EXECUTION – NOT USED

END OF SECTION

SECTION 01741

CONSTRUCTION MATERIAL WASTE MANAGEMENT PLAN

PART 1 GENERAL

1.1 CONSTRUCTION MATERIAL WASTE MANAGEMENT PLAN

A. Submit Construction Material Waste Management Plan that includes, but is not limited to:
   1. Management monitoring program that includes, at a minimum, multiple recyclables containers.
   2. Current recycling program used by each material supplier for materials listed in Divisions 1-16.
   3. Estimate of on-Site material reuse (native fill) in tons.
   4. Completed Self-Certification of Compliance for Contractor and each listed Subcontractor. Self-Certification of Compliance form is included at the end of this Section 01741.

B. Submit monthly progress reports updated with waste management log that includes which material containers have been removed, how many have been removed, and the weight of those containers.

PART 2 PRODUCTS - NOT USED

PART 3 EXECUTION - NOT USED

END OF SECTION

SELF-CERTIFICATION OF COMPLANCE WITH CONTRUCTION MATERIAL WASTE PLAN

Firm Name: _____ Phone: _____

Address: _____

Principal Service or Product: _____

☐ Prime Contractor ☐ Supplier of Material/Service

☐ Subcontractor ☐ Broker

☐ Sole Ownership ☐ Corporation

☐ Partnership ☐ Joint Venture

I, Contractor/Subcontractor, hereby certify that I have read and understood, and agree to adopt and implement, the approved Construction Waste Management Plan for the North Bay Water Reuse Program - Sonoma Valley Effluent Reservoir R5.

Certified by:

Name:_____ Title:_____

Signature:_____ Date:_____

SECTION 01770

CONTRACT CLOSEOUT

PART 1 GENERAL

1.1 SUMMARY

A. Section Includes:
   1. Description of Contract closeout procedures including:
      a. Removal of Temporary Construction Facilities
      b. Substantial Completion
      c. Final Completion
      d. Project Record Documents
      e. Project Guarantee
      f. Warranties
      g. Turn-In
      h. Computer Programs
      i. Release of Claims
      j. Fire Inspection Coordination
      k. Building Inspection Coordination

1.2 REMOVAL OF TEMPORARY CONSTRUCTION FACILITIES

A. Remove temporary materials, equipment, services, and construction prior to Substantial Completion inspection.
B. Clean and repair damage caused by installation or use of temporary facilities.
C. Restore permanent facilities used during construction to specified condition.
D. Comply with paragraph 1.13 of Section 01500 (Temporary Facilities and Controls).

1.3 SUBSTANTIAL COMPLETION

A. When Contractor considers Work or designated portion of the Work as Substantially Complete, submit timely written notice to Owner, with list of items remaining to be completed or corrected.
B. Within reasonable time, Owner will inspect to determine status of completion.
C. Should Owner determine that Work is not Substantially Complete, Owner will promptly notify Contractor in writing, listing all defects and omissions.
D. Remedy deficiencies and send a second written notice of Substantial Completion. Owner will reinspect the Work. If deficiencies previously noted are not corrected on reinspection, then Contractor shall pay the cost of the reinspection.
E. When Owner concurs that Work is Substantially Complete, Owner will issue a Certificate of Substantial Completion, accompanied by Contractor's list of items to be completed or corrected as verified by Owner.
F. Before a Certificate of Substantial Completion will be issued, Contractor must accomplish:
   1. Startup of manufactured units, equipment, and systems that require startup and run for periods prescribed by Owner.
   2. Commissioning.
   3. Training.
   4. Submittal of final Installation, Operation, and Maintenance Manuals.
G. A punch list examination will be performed upon Substantial Completion. One follow-up review of punch list items for each discipline will be provided. If further Site visits are

required to review punch list items due to incompleteness of the Work by Contractor, Contractor shall reimburse Owner for costs associated with these visits.

1.4 FINAL COMPLETION

A. Final Completion occurs when Work meets requirements for Owner's Final Acceptance. When Contractor considers Work is Finally Complete, submit written certification that:
   1. Contractor has inspected Work for compliance with Contract Documents, and all requirements for Final Acceptance have been met.
   2. Except for Contractor maintenance after Final Acceptance, Work has been completed in accordance with Contract Documents and deficiencies listed with Certificate of Substantial Completion have been corrected. Equipment and systems have been tested in the presence of Owner, and are operative.
   3. Work is complete and ready for final inspection.

B. In addition to submittals required by Contract Documents, provide submittals required by governing authorities and submit final statement of accounting giving total adjusted Contract Sum, previous payments, and sum remaining due.

C. When Owner finds Work is acceptable and final closeout submittals are complete, Owner will issue final Change Order reflecting approved adjustments to Contract Sum not previously made by Change Order. Should Owner determine that Work is incomplete or Defective:
   1. Owner promptly will so notify Contractor, in writing, listing the incomplete or Defective items.
   2. Promptly remedy the deficiencies and notify the Owner when it is ready for reinspection.
   3. When Owner determines that the Work is acceptable under the Contract Documents, Owner will request Contractor to make closeout submittals.

D. Final adjustments of accounts:
   1. Submit a final statement of accounting to Owner, showing all adjustments to the Contract Sum and complete and execute Document 00650 (Agreement and Release of Any and All Claims).
   2. If so required, Owner shall prepare a final Change Order for submittal to Contractor, showing adjustments to the Contract Sum that were not previously made into a Contract Modification.

1.5 PROJECT RECORD DOCUMENTS

A. Contract Documents will not be closed out and final payment will not be made until completion and submittal of Project Record Documents described in Section 01780 (Project Record Documents).

1.6 PROJECT GUARANTEE

A. Requirements for Contractor's guarantee of completed Work are included in Article 9 of Document 00700 (General Conditions). Guarantee Work done under Contract against failures, leaks, or breaks or other unsatisfactory conditions due to defective equipment, materials, or workmanship, and perform repair work or replacement required, at Contractor's sole expense, for period of one year from date of Final Acceptance.

B. Neither recordation of Final Acceptance nor final certificate for payment nor provision of the Contract nor partial or entire use or occupancy of premises by Owner shall constitute acceptance of Work not done in accordance with Contract Documents nor relieve Contractor

of liability in respect to express warranties or responsibility for faulty materials or workmanship.

C. Owner may make repairs to Defective Work as set forth in Document 00700 (General Conditions), paragraph 9.3.

D. If, after installation, operation, or use of materials or equipment to be provided under Contract proves to be unsatisfactory to Owner, Owner shall have right to operate and use materials or equipment until said materials and equipment can, without damage to Owner, be taken out of service for correction or replacement. Period of use of Defective materials or equipment pending correction or replacement shall in no way decrease guarantee period required for acceptable corrected or replaced items of materials or equipment.

E. Nothing in this Section 01770 shall be construed to limit, relieve, or release Contractor's, Subcontractors', and equipment suppliers' liability to Owner for damages sustained as result of latent defects in equipment caused by negligence of suppliers' agents, employees, or Subcontractors. Stated in another manner, warranty contained in the Contract Documents shall not amount to, nor shall it be deemed to be, waiver by Owner of any rights or remedies (or time limits in which to enforce such rights or remedies) it may have for Defective workmanship or Defective materials under laws of this State pertaining to acts of negligence.

1.7 WARRANTIES

A. Execute Contractor's Submittals and assemble warranty documents and operation and maintenance manuals executed or supplied by Subcontractors, suppliers, and manufacturers.
   1. Provide table of contents and assemble in 8½ inches by 11 inches three-ring binder with durable plastic cover, appropriately separated and organized.
   2. Assemble in Specification Section order.

B. Submit material prior to final Application for Payment.
   1. For equipment put into use with Owner's permission during construction, submit within 14 Days after first operation.
   2. For items of Work delayed materially beyond Date of Substantial Completion, provide updated Submittal within 14 Days after acceptance, listing date of acceptance as start of warranty period.

C. Warranties are intended to protect Owner against failure of Work and against deficient, Defective, and faulty materials and workmanship, regardless of sources.

D. Limitations: Warranties are not intended to cover failures that result from the following:
   1. Unusual or abnormal phenomena of the elements
   2. Vandalism after Substantial Completion
   3. Insurrection or acts of aggression including war

E. Related Damages and Losses: Remove and replace Work which is damaged as result of Defective Work, or which must be removed and replaced to provide access for correction of warranted Work.

F. Warranty Reinstatement: After correction of warranted Work, reinstate warranty for corrected Work to date of original warranty expiration or to a date not less than one year after corrected Work was done, whichever is later.

G. Replacement Cost: Replace or restore failing warranted items without regard to anticipated useful service lives.

H. Warranty Forms: Submit drafts to Owner for approval prior to execution. Forms shall not detract from or confuse requirements or interpretations of Contract Documents.

1. Warranty shall be countersigned by manufacturers.
2. Where specified, warranty shall be countersigned by Subcontractors and installers.

I. Rejection of Warranties: Owner reserves right to reject unsolicited and coincidental product warranties that detract from or confuse requirements or interpretations of Contract Documents.

J. Term of Warranties: For materials, equipment, systems, and workmanship, warranty period shall be one year minimum from date of Final Completion of entire Work except where:
1. Detailed Specifications for certain materials, equipment or systems require longer warranty periods.
2. Materials, equipment or systems are put into beneficial use of Owner prior to Final Completion as agreed to in writing by Owner.

K. Transfer of Warranties: Any warranty shall automatically transfer, without charge, to a subsequent owner who acquires the Project. Any transfer of the Project shall not extend the duration of any warranty.

L. Warranty of Title: No material, supplies, or equipment for Work under Contract shall be purchased subject to any chattel mortgage, security agreement, or under a conditional sale or other agreement by which an interest therein or any part thereof is retained by seller or supplier. Contractor warrants good title to all material, supplies, and equipment installed or incorporated in Work and agrees upon completion of all Work to deliver premises, together with improvements and appurtenances constructed or placed thereon by Contractor, to Owner free from any claim, liens, security interest, or charges, and further agrees that neither Contractor nor any person, firm, or corporation furnishing any materials or labor for any Work covered by Contract shall have right to lien upon premises or improvement or appurtenances thereon. Nothing contained in this paragraph, however, shall defeat or impair right of persons furnishing materials or labor under bond given by Contractor for their protection or any rights under law permitting persons to look to funds due Contractor in hands of Owner.

1.8 TURN-IN

A. Contract Documents will not be closed out and final payment will not be made until all keys and locks issued to Contractor during prosecution of Work and letters from property owners, if required under paragraph 1.2.F of Section 01740 (Cleaning), are turned in to Owner.

1.9 COMPUTER PROGRAMS

A. When any equipment requires operation by computer programs, submit 5 sets of the program, on appropriate electronic media, plus all user manuals and guides for operating the programs and making changes in the programs for upgrading and expanding the databases. Program shall be Windows XP compatible. Provide required licenses to Owner at no additional cost.

1.10 RELEASE OF CLAIMS

A. Contract Documents will not be closed out and final payment will not be made until Document 00650 (Agreement and Release of Any and All Claims) is completed and executed by Contractor and Owner.

1.11 FIRE INSPECTION COORDINATION

A. Coordinate fire inspection and secure sufficient notice to Owner to permit convenient scheduling (if applicable).

1.12 BUILDING INSPECTION COORDINATION

A. Coordinate with Owner a final inspection for the purpose of obtaining an occupancy certificate (if applicable).

PART 2 PRODUCTS – NOT USED

PART 3 EXECUTION – NOT USED

END OF SECTION

SECTION 01780

PROJECT RECORD DOCUMENTS

PART 1 GENERAL

1.1 SUMMARY

A. Section Includes:
   1. Administrative and procedural requirements for the following Project Record Documents:
      a. Project Record Drawings and Shop Drawings
      b. Project Record Specifications
      c. Miscellaneous Project Record Submittals
B. Specific Project Record Documents requirements that expand requirements of this Section may be included in the individual Sections of Divisions 2 through 16.

1.2 SUBMITTAL

A. During construction, bring hard-copy updates of the Project Record Drawings (Field Set) to monthly Progress Payment Meetings.
B. At completion of Project, deliver Project Record Documents to Owner. Project Record Documents required include:
   1. Marked-up copies of Drawings (Field Set)
   2. Final Project Record Drawings
   3. Marked-up copies of Specifications
   4. Marked-up copies of Shop Drawings, if applicable
   5. Miscellaneous Project Record Submittals
C. Accompany submittal with transmittal letter containing:
   1. Date
   2. Project title and Owner's Contract number
   3. Contractor's name and address
   4. Number and title of each Project Record Document
   5. Certification that each document as submitted is complete and accurate, and signature of Contractor or Contractor's authorized representative.

1.3 GENERAL

A. Prior to start of construction, Owner will provide one full size set of Drawings and one copy of the Project Manual for Contractor's use for recording as-built conditions.
B. Post changes and Modifications to the Contract Documents as they occur. Do not wait until the end of the Project. Owner will review Project Record Documents on a monthly basis to assure compliance with this requirement.
C. Refer instances of uncertainty to Owner for resolution.
D. Maintenance of Documents:
   1. Store Project Record Documents in the field office apart from Contract Documents used for construction.
   2. Do not permit Project Record Documents to be used for construction purposes.
   3. Maintain Project Record Documents in good order and in a clean, dry, neat, and legible condition.
   4. Make Project Record Documents available at all times for inspection by Owner.

1.4 PROJECT RECORD DRAWINGS AND SHOP DRAWINGS

A. Quality Draftsmanship: All Work on Project Record Drawings and Project Record Shop Drawings shall be performed by competent drafters and shall be clear and fully legible. Owner shall be the sole judge of the acceptability of the Project Record Drawings and Project Record Shop Drawings.

B. Mark-up Procedure: During the construction period, maintain a set of full size prints of Drawings and Shop Drawings for Project Record Documents purposes ("Field Set"). Stamp each document (on each sheet or page) "PROJECT RECORD" in 2-inch high letters. Keep record documents current. Note: A reference by number to a Change Order, CCD, RFI, RFQ, RFP, Field Order or other such document is not acceptable as sufficient record information on any record document. Do not permanently conceal any Work until required information has been recorded.

1. Mark Drawings and Shop Drawings to indicate the actual installation where the installation varies appreciably from the installation shown originally. Give particular attention to information on concealed elements that would be difficult to identify or measure and record later. Items required to be marked include but are not limited to:
   a. Dimensional changes to the Drawings and Shop Drawings
   b. Revisions to details shown on the Drawings and Shop Drawings
   c. Depths of various elements of foundation in relation to main floor level or survey datum
   d. Variable or concealed field conditions
   e. Horizontal and vertical location of underground utilities and appurtenances referenced to permanent surface improvements
   f. Location of internal utilities and appurtenances concealed in construction referenced to visible and accessible features of structure
   g. Locations of underground Work, points of connection with existing utilities, changes in direction, valves, manholes, catch basins, capped stub outs, invert elevations, and similar items
   h. Actual numbering and set points of each electrical circuit
   i. Field changes of dimension and detail
   j. Revisions to routing of piping and conduits
   k. Revisions to electrical circuitry
   l. Actual equipment locations
   m. Duct, conduit, and cable size and routing
   n. Changes made by Change Order or CCD
   o. Details not on original Drawings or Shop Drawings
2. Mark completely and accurately Drawings or Shop Drawings, whichever is the most capable of showing actual physical conditions. Where Shop Drawings are marked, show cross-reference on Drawings location.
3. Mark important additional information that was either shown schematically or omitted from original Drawings.
4. Use revision block to record information related to the mark-ups, including CCD numbers; Alternate numbers, Change Order numbers, and similar identification.
5. Mark Drawing and Shop Drawing sets with red, erasable colored pencil.
6. Responsibility for Mark-up: Where feasible, the individual or entity who obtained Project Record Drawing or Shop Drawing data, whether the individual or entity is the installer, Subcontractor, or similar entity, is required to prepare the mark-up on Project Record Drawings or Shop Drawings.

a. Accurately record information in an understandable and legible drawing technique.
b. Record data as soon as possible after it has been obtained. In the case of concealed installations, record and check the mark-up prior to concealment.

C. Preparation of Project Record Drawings and Project Record Shop Drawings: Immediately prior to inspection for Certification of Substantial Completion, review completed marked-up Project Record Drawings (Field Set)and Project Record Shop Drawings with Owner. When authorized, prepare final Project Record Drawings and Project Record Shop Drawings.
1. Project Record Drawings:
a. Prior to review of Contractor's Application for Payment, the Owner and Contractor will review updates to the Field Set of Project Record Drawings to verify that record documents are current.
b. Upon Certification of Substantial Completion, Contractor will transfer all updates from the "Field Set" to a clean set of full size contract drawings furnished by the Owner. Each sheet shall include a Project Record Drawing stamp which is dated and "wet signed" by the Contractor.
c. If Contractor chooses and Owner approves in advance, Contractor may submit electronic updates on final Project Record Drawings, so long as final Project Record Drawings preserve the integrity of the data and are compatible with Owner's software.
2. Project Record Shop Drawings:
a. Transfer all information previously marked on Field Set to a separate clean set of Shop Drawings provided by Owner. Erase, redraw, and add details and notations where applicable. Identify and date each Shop Drawing; include the printed designation "PROJECT RECORD SHOP DRAWING" in a prominent location on each Shop Drawing. Bind the set with durable paper cover sheets, with appropriate identification, including titles, dates, and other information on cover sheet.

D. In addition to requirements of this Section, comply with supplemental requirements of Divisions 15.
1. Division 15 of the Specifications may require the preparation of large scale, detailed layout drawings of the Work of that Division. These layout drawings are not Shop Drawings as defined by Section 01420 (References and Definitions), but together with Shop Drawings or layout drawings of all other affected Sections are used to check, coordinate, and integrate the work of the various Sections.
2. Include these layout drawings as part of the Project Record Documents.

1.5 PROJECT RECORD SPECIFICATIONS

A. During the construction period, maintain one copy of the Specifications, including Addenda and Modifications issued, for Project Record Documents purposes.

B. Mark the Project Record Specifications to indicate the actual installation where the installation varies substantially from that indicated in Specifications issued. Note related Project Record Drawing information, where applicable. Give particular attention to substitutions, selection of product options, Change Order and CCD Work, and information on concealed installation that would be difficult to identify or measure and record later.
1. In each Specification Section where products, materials or units of equipment are specified or scheduled, mark the copy with the proprietary name and model number of the product furnished.

2. Record the name of the manufacturer, catalog number, supplier and installer, and other information necessary to provide a record of selections made and to document coordination with Installation, Operation, and Maintenance Manuals.
3. For each principal product specified, indicate whether data has been submitted in Installation, Operation, and Maintenance Manuals.

C. Preparation of Project Record Specifications: Immediately prior to inspection for Certification of Substantial Completion, review completed Field Set Project Record Specifications with Owner. When authorized, prepare final Project Record Specifications.
1. After Substantial Completion and before Final Completion, carefully transfer all data shown on the Field Set to a separate clean set of Specifications provided by Owner. Include the printed designation "PROJECT RECORD SPECIFICATION" in a prominent location on the Specifications.

1.6 MISCELLANEOUS PROJECT RECORD SUBMITTALS

A. Refer to other Specification Sections for miscellaneous record keeping requirements and submittals in connection with various construction activities. Immediately prior to Substantial Completion, complete miscellaneous records and place in good order, properly identified and bound or filed, ready for use and reference. Submit to the Owner for Owner's records. Categories of requirements resulting in miscellaneous records may include, but are not limited to, the following:
1. List all products used in the Project, organized by Specification section and article. Product list shall be submitted in an electronic format, compatible with Microsoft Excel 2000.
2. Delivery records of materials incorporated into the Work
3. Records of product lot numbers and expiration dates
4. Quality Assurance/Quality Control records for field Work

PART 2 PRODUCTS – NOT USED

PART 3 EXECUTION – NOT USED

END OF SECTION

DIVISION 2

SITE CONSTRUCTION

SECTION 02072

DEMOLITION, CUTTING AND PATCHING

PART 1 GENERAL

1.1 SUMMARY

A. Section Includes:
1. Demolition, cutting and patching of existing construction as indicated, or as required to accommodate new Work shown or specified.

1.2 SUBMITTALS

A. Shop Drawings:
1. Indicating manufacturer and type of:
   a. Proposed nonshrink grout.
   b. Epoxy bonding adhesive.
   c. Proposed materials and methods to be used for matching and repairing existing construction.

1.3 DELIVERY, STORAGE, AND HANDLING

A. General:
1. Salvage items, designated for Owner's salvage, as a functional unit.
2. Clean, list and tag for storage.
3. Protect from damage and deliver to location designated.
4. Salvage each item with auxiliary or associated equipment required for operation.

PART 2 PRODUCTS

2.1 MANUFACTURERS

A. Subject to compliance with the Contract Documents, the following manufacturers are acceptable:
1. Nonshrink grout:
   a. Supreme Grout by Gifford Hill.
   b. Masterflow 713 by Master Builders.
   c. Sika Grout 212 by Sika.
   d. Or Approved Equal.
2. Epoxy bonding adhesive:
   a. Euco No.452 MV by Euclid Chemical Co.
   b. Sikadur 32, Hi-Mod by Sika Corporation.

2.2 MATERIALS

A. Nonshrink Grout:
1. Nonmetallic, noncorrosive and nonstaining.
2. Premixed with only water to be added in accordance with manufacturer's instructions at jobsite.
3. Grout to produce a positive but controlled expansion. Mass expansion not to be created by gas liberation or by other means.
4. Minimum compressive strength at 28 Days to be 6500 psi.

B. Epoxy Bonding Adhesive:
   1. Two component, moisture insensitive adhesive manufactured for the purpose of bonding fresh concrete to hardened concrete.

PART 3 EXECUTION

3.1 PREPARATION

A. Provide safety lights as required.

3.2 INSTALLATION

A. Cutting and Removal:
   1. Remove existing Work indicated to be removed, or as necessary for installation of new Work.
   2. Neatly cut and remove materials, and prepare all openings to receive new Work.
   3. Remove concrete in small sections.
   4. Coat exposed edges of grout with a cure/seal compound recommended by grout manufacturer.

B. Salvaged Items:
   1. Thoroughly dry and clean all metal surfaces.
   2. Prime all bare metal in accordance with Section 09905 (Painting and Protective Coatings).
   3. Dispose of items or materials not designated for Owner's salvage or reuse. Promptly remove from Site.
   4. Do not store or sell Contractor salvaged items or materials on Site.

C. Clean Up:
   1. Transport debris and legally dispose of off Site.

END OF SECTION

SECTION 02110

EXCAVATION, REMOVAL, AND HANDLING OF HAZARDOUS MATERIALS

PART 1 GENERAL

1.1 SUMMARY

A. Section Includes:
   1. Management of asbestos cement pipe

1.2 SUBMITTALS

A. Work Plans:
   1. Hazardous Waste Testing, Handling, Stockpiling, Transporting, and Disposal Plan for Asbestos Cement Pipe (ACP Plan):
      a. Prepared and stamped by a California Registered Professional Civil Engineer or a California Registered Geologist experienced in construction activities involving hazardous materials
      b. The ACP Plan shall, at a minimum, contain the following:
         1) General
            (a) Detailed description of the proposed construction methods for safely excavating, containing, stockpiling, transporting, and cleanup of asbestos cement pipe
            (b) Proposed location of temporary stockpiling area(s)
            (c) Procedure for:
               (i) Erosion/surface water runoff control
               (ii) Security
               (iii) Dust prevention
               (iv) Decontamination of construction
            (d) Description of the required documents to be obtained by Contractor, including EPA Waste Generator Number(s) and waste manifests, if required.
            (e) Description of permits (if any) that must be obtained or regulations that must be complied with in order to implement the Plan.
            (f) Names and addresses of Contractor's proposed permitted facilities for treatment, recycling, and/or disposal
            (g) Any proposed treatment methods to be implemented prior to disposal
      c. Upon Owner's favorable review of the ACP Plan, submit the ACP Plan to appropriate regulating agencies for review as required. Regulating agencies may include, but are not limited to, the following:
         1) Sonoma County Department of Emergency Services
         2) Bay Area Air Quality Management District (BAAQMD)
         3) Sonoma County Health Services Department, Division of Environmental Health (SCDEH)
         4) PRMD

5) OSHA
6) Other agencies, as applicable

d. Obtain all necessary approvals and permits
e. Submit all necessary notifications
f. Submit approvals and permits to Owner prior to mobilization

1.3 PROJECT CONDITIONS

A. Existing Conditions:
1. Asbestos Cement Pipe:
a. Some existing irrigation main pipe and fittings to be encountered during earthwork operations are expected to be asbestos cement pipe.
b. All known locations of asbestos cement pipe are indicated; other locations may exist.

PART 2 PRODUCTS - NOT USED

PART 3 EXECUTION

3.1 HAZARDOUS MATERIAL MANAGEMENT

A. Asbestos Cement Pipe:
1. Remove, handle, store, transport, and dispose of pipe in accordance with all applicable regulations and the approved ACP Plan.
2. Dust emissions of friable material are prohibited. Owner will stop all Work until material is properly managed.

END OF SECTION

SECTION 02230

SITE CLEARING

PART 1 GENERAL

1.1 SUMMARY

A. Section Includes:
   1. Site Clearing, stripping topsoil and demolition.

PART 2 PRODUCTS - NOT USED

PART 3 EXECUTION

3.1 PREPARATION

A. Protect existing trees and other vegetation to remain against damage.
   1. Do not smother trees by stockpiling construction materials or excavated materials within drip line.
   2. Avoid foot or vehicular traffic or parking of vehicles within drip line.
   3. Provide temporary protection as required.
B. Repair or replace trees and vegetation damaged by construction operations.
   1. Repair to be performed by a qualified tree surgeon.
   2. Remove trees which cannot be repaired and restore to full-growth status.
   3. Replace with new trees of minimum 4 IN caliper.

3.2 SITE CLEARING AND DEMOLITION

A. Topsoil Removal:
   1. Strip topsoil to depths encountered.
      a. Remove heavy growths of grass before stripping.
      b. Stop topsoil stripping sufficient distance from trees to prevent damage to main root system.
      c. Separate from underlying subsoil or objectionable material.
   2. Stockpile topsoil in Contractor staging area or within work area.
      a. Construct storage piles to freely drain surface water.
      b. Seed or cover storage piles to prevent erosion.
   3. Do not strip topsoil in wooded areas where no change in grade occurs.
   4. Borrow topsoil:
      a. Reasonably free of subsoil, objects over 2 IN DIA, weeds and roots.
B. Clearing and Grubbing:
   1. Clear from within limits of construction all trees not marked to remain.
      a. Include shrubs, brush, downed timber, rotten wood, heavy growth of grass and weeds, vines, rubbish, structures and debris.
   2. Grub (remove) from within limits of construction all stumps, roots, root mats, logs and debris encountered.
      a. Grubb under areas to be paved.
   3. All organic grubbed materials may be mechanically “chipped” on-Site and disposed of uniformly within designated borrow area.

C. Disposal of Waste Materials:
   1. Do not burn combustible materials on Site.
   2. Remove all waste materials from Site.
   3. Do not bury organic matter on Site.
D. Remove any existing fill soil from within the embankment footprint.
E. Demolish existing irrigation piping within reservoir area.

3.3 ACCEPTANCE

A. Upon completion of the Site clearing, obtain Owner's acceptance of the extent of clearing, depth of stripping and rough grade.

END OF SECTION

SECTION 02300

EARTHWORK

PART 1 GENERAL

1.1 SUMMARY

A. Section Includes:
   1. Earthwork.

1.2 REFERENCES

A. ASTM C33	Standard Specification for Concrete Aggregates
B. ASTM D698	Standard Test Method for Laboratory Compaction Characteristics of Soil Using Standard Effort (12,400 ft-lbf/ft^3)
C. ASTM D3786	Standard Test Method for Hydraulic Bursting Strength of Knitted Goods and Nonwoven Fabrics: Diaphragm
D. ASTM D4318	Standard Test Methods for Liquid Limit, Plastic Limit, and Plasticity Index of Soils
E. ASTM D4632	Standard Test Method for Grab Breaking Load and Elongation of Geotextiles

1.3 DEFINITONS

A. Foundations: Includes footings, base slabs, foundation walls, mat foundations, grade beams, piers and any other support placed directly on soil.
B. Soil: Includes any type of rock subgrade that may be present at or below existing subgrade levels.

1.4 SUBMITTALS

A. Shop Drawings:
   1. Product technical data including:
      a. Acknowledgement that products submitted meet requirements of standards referenced.
      b. Manufacturer's installation instructions.
   2. Certifications.
   3. Test reports:
      a. Soils inspection and testing results.
   4. Contractor to submit Grading Operations Plan for reservoir embankment construction. Plan to include anticipated methodology for segregating and placement of Type 1 and Type II fill materials. Contractor to identify access route for import or export material if import or export material is anticipated.
   5. Contractor to submit Dewatering Plan. All dewatering discharge must be conveyed and discharged into Equalization Basin No. 1. Contractor to install discharge line under access road on north side of Equalization Basin No. 1. Discharge is limited to 1 million gallons per day (1 MGD). Contractor to remove pipe and repair road after completion of construction.
B. Samples:
   1. Submit samples and source of fill and backfill materials proposed for use.
   2. Submit samples and source of borrow materials proposed for use.

PART 2 PRODUCTS

2.1 MATERIALS

A. Fill: Selected material approved by Owner from Site excavation or from off Site borrow.
   1. All fill material (including Type 1 and Type 2 fill):
      a. Free of deleterious and organic matter.
      b. Maximum particle size: 2 IN.
   2. Embankment fill materials:
      a. Type 1 fill material.
         1) Maximum liquid limit (LL): 45.
         2) Maximum plasticity index (PI): 25.
         3) Minimum plasticity index (PI): 8.
         4) Maximum percent passing No. 200 sieve: 80.
         5) Minimum percent passing No. 200 sieve: 20.
      b. Type 2 fill material:
         1) Maximum plasticity index (PI): 40.
         2) Minimum plasticity index (PI): 8.
         3) Maximum percent passing No. 200 sieve: 80.
         4) Minimum percent passing No. 200 sieve: 20.
   3. Fill outside of embankment area.
      a. Type 1 fill.

B. Granular Fill Under Building Floor Slabs-On-Grade: Clean, crushed, nonporous rock, crushed or uncrushed gravel complying with ASTM C33 gradation size No. 67, 3/4 IN to No. 4.

C. Geotextile Filter Fabric:
   1. Nonwoven type.
   2. Equivalent opening size: 50-100 (U.S. Standard Sieve).
   3. Permeability coefficient (cm/second): 0.07 minimum, 0.30 maximum.
   4. Grab strength: 90 LBS minimum in either direction in accordance with ASTM D4632 requirements.
   5. Mullen burst strength: 125 psi minimum in accordance with ASTM D3786 requirements.

PART 3 EXECUTION

3.1 SITE EXCAVATION AND GRADING

A. Excavation and Grading: Perform as indicated.
   1. Contract Drawings may indicate both existing grade and finished grade required for construction of Project.
      a. Stake all units, structures, piping, roads, parking areas and walks and establish their elevations.
      b. Perform other layout Work required.
      c. Replace property corner markers to original location if disturbed or destroyed.
   2. Preparation of ground surface for embankments or fills:
      a. Before fill is started, scarify to a minimum depth of 12 IN in all proposed embankment and fill areas.

3. Protection of finish grade:
    a. During construction, shape and drain embankment and excavations.
    b. Maintain ditches and drains to provide drainage at all times.
    c. Protect graded areas against action of elements prior to acceptance of Work.
    d. Reestablish grade where settlement or erosion occurs.

B. Borrow:
1. Provide necessary amount of approved fill compacted to density equal to that indicated in this Section 02300.
2. Fill material to be approved by Owner prior to placement.

C. Construct embankments and fills as indicated.
1. Construct embankments and fills at locations and to lines of grade indicated.
    a. Completed fill shall correspond to shape of typical cross section or contour indicated regardless of method used to show shape, size, and extent of line and grade of completed Work.
2. Provide approved fill material which is free from roots, organic matter, trash, frozen material, and stones having maximum dimension greater than 2 IN.
    a. Do not place material in layers greater than 8 IN loose thickness.
    b. Place layers horizontally and compact each layer prior to placing additional fill.
3. Compact by sheepsfoot, pneumatic rollers, vibrators, or by other equipment as required to obtain specified density.
    a. Control moisture for each layer necessary to meet requirements of compaction.

3.2 USE OF EXPLOSIVES

A. Blasting with any type of explosive is prohibited.

3.3 FIELD QUALITY CONTROL

A. Extent of compaction testing will be as necessary to ensure compliance with Specifications.
B. Atterberg Limits laboratory test per ASTM D4318 shall be performed for every 1,000 cubic yards of material placed for classification of Type 1 and Type 2 fill materials.
C. Give minimum of 24 HR advance notice to Owner when ready for compaction or subgrade testing and inspection.
D. Should any compaction density test, Atterberg Limits test, or subgrade inspection fail to meet Specification requirements, perform corrective Work as necessary.
E. Pay for all costs associated with corrective Work and retesting resulting from failing compaction density or Atterberg Limits tests.

3.4 COMPACTION DENSITY REQUIREMENTS

A. Obtain approval from Owner with regard to suitability of soils and acceptable subgrade prior to subsequent operations.
B. Provide dewatering system necessary to successfully complete compaction and construction requirements.
C. Remove frozen, loose, wet, or soft material and replace with approved material as directed by Owner.
D. Stabilize subgrade with well graded granular materials as directed by Owner.

E. Ensure by results of testing that compaction densities comply with the following requirements:
   1. Embankments:

LOCATION	COMPACTION DENSITY
Embankment Fill:	
Type 1 and Type 2	97 percent per ASTM D698 at -1 percent to 3 percent optimum moisture content.

   2. Structures:

LOCATION	COMPACTION DENSITY
Inside of structures under foundations, under equipment support pads, under slabs-on-grade.	100 percent per ASTM D698 at -1 percent to 3 percent optimum moisture content.

3.5 EXCAVATION, FILLING, AND BACKFILLING FOR STRUCTURES

A. Excavation Requirements for Structures:
   1. General:
      a. Do not commence excavation for foundations for structures until Owner approves:
         1) The removal of topsoil and other unsuitable and undesirable material from existing subgrade.
         2) Density and moisture content of Site area compacted fill material meets requirements of Specifications.
         3) Site surcharge or mass fill material can be removed from entire Site or portion thereof.
         4) Surcharge or mass fill material has been removed from Site or portions thereof.
      b. Owner grants approval to begin excavations.
   2. Dimensions:
      a. Excavate to elevations and dimensions indicated or specified.
      b. Allow additional space as required for construction operations and inspection of foundations.
   3. Removal of obstructions and undesirable materials in excavation includes, but is not necessarily limited to, removal of old foundations, existing construction, unsuitable subgrade soils, expansive type soils, and any other materials which may be concealed beneath present grade, as required to execute Work as indicated.
      a. If undesirable material and obstructions are encountered during excavation, remove material and replace as directed by Owner.
   4. Level off bottoms of excavations to receive foundations, floor slabs, equipment support pads, or compacted fill.
      a. Remove loose materials and bring excavations into approved condition to receive concrete or fill material.
      b. Where compacted fill material must be placed to bring subgrade elevation up to underside of construction, scarify existing subgrade upon which fill material is to be placed to a depth of 12 IN and then compact to density stated in this Section 02300 before fill material can be placed thereon.

   c. Do not carry excavations lower than shown for foundations except as directed by Owner.
   d. If any part of excavations is carried below required depth without authorization, maintain excavation and start foundation from excavated level with concrete of same strength as required for superimposed foundation, and no extra compensation will be made to Contractor therefore.
5. Make excavations large enough for working space, forms, dampproofing, waterproofing, and inspection.
6. Notify Owner as soon as excavation is completed in order that subgrades may be inspected.
   a. Do not commence further construction until subgrade under compacted fill material, under foundations, under floor slabs-on-grade, and under equipment support pads has been inspected and approved by the Owner as being free of undesirable material, being of compaction density required by this Section 02300, and being capable of supporting the allowable foundation design bearing pressures and superimposed foundation, fill, and building loads to be placed thereon.
   b. Owner shall be given the opportunity to inspect subgrade below fill material both prior to and after subgrade compaction.
   c. Place fill material, foundations, retaining wall footings, floor slabs-on-grade, and equipment support pads as soon as weather conditions permit after excavation is completed, inspected, and approved and after forms and reinforcing are inspected and approved.
   d. Before concrete or fill material is placed, protect approved subgrade from becoming loose, wet, frozen, or soft due to weather, construction operations, or other reasons.
7. Dewatering:
   a. Groundwater will be encountered during excavation. Contractor is required to install a dewatering system to prevent softening and disturbance of subgrade below foundations and fill material, to allow foundations and fill material to be placed in the dry, and to maintain a stable excavation side slope.
   b. Groundwater shall be maintained at least 3 FT below the bottom of any excavation.
   c. Employ dewatering specialist for selecting and operating dewatering system.
   d. Keep dewatering system in operation until dead load of structure exceeds possible buoyant uplift force on structure.
   e. Dispose of groundwater to an area which will not interfere with construction operations or damage existing construction.
      1) Install groundwater monitoring wells as necessary.
      2) Discharge groundwater to Equalization Basin No. 1. Maximum discharge rate 1.0 million gallons per day (MGD).
   f. Shut off dewatering system at such a rate to prevent a quick upsurge of water that might weaken the subgrade.
8. Subgrade stabilization:
   a. If subgrade under foundations, fill material, floor slabs-on-grade, or equipment support pads is in a frozen, loose, wet, or soft condition before construction is placed thereon, remove frozen, loose, wet, or soft material and replace with approved compacted material as directed by Owner.
   b. Provide compaction density of replacement material as stated in this Section 02300.
   c. Loose, wet, or soft materials, when approved by Owner, may be stabilized by a compacted working mat of well graded crushed stone.

   d. Compact stone mat thoroughly into subgrade to avoid future migration of fines into the stone voids.
   e. Remove and replace frozen materials as directed by Owner.
   f. Method of stabilization shall be performed as directed by Owner.
   g. Do not place further construction on the repaired subgrades, until the subgrades have been approved by Owner.
9. Do not place floor slabs-on-grade including equipment support pads until subgrade below has been approved, piping has been tested and approved, reinforcement placement has been approved, and Contractor receives approval to commence slab construction.
   a. Do not place building floor slabs-on-grade including equipment support pads when temperature of air surrounding the slab and pads is or is expected to be below 40 DegF before structure is completed and heated to a temperature of at least 50 DegF.
10. Protection of structures:
   a. Prevent new and existing structures from becoming damaged due to construction operations or other reasons.
   b. Prevent subgrade under new and existing foundations from becoming wet and undermined during construction due to presence of surface or subsurface water or due to construction operations.
11. Shoring:
   a. Shore, sheet pile, slope, or brace excavations as required to prevent them from collapsing.
   b. Remove shoring as backfilling progresses but only when banks are stable and safe from caving or collapse.
12. Drainage:
   a. Control grading around structures so that ground is pitched to prevent water from running into excavated areas or damaging structures.
   b. Maintain excavations where foundations, floor slabs, equipment support pads or fill material are to be placed free of water.
   c. Provide pumping required to keep excavated spaces clear of water during construction.
   d. Should any water be encountered in the excavation, notify Owner.
   e. Provide free discharge of water by trenches, pumps, wells, well points, or other means as necessary and drain to point of disposal that will not damage existing or new construction or interfere with construction operations.
13. Frost protection:
   a. Do not place foundations, slabs-on-grade, equipment support pads, or fill material on frozen ground.
   b. When freezing temperatures may be expected, do not excavate to full depth indicated, unless foundations, floor slabs, equipment support pads, or fill material can be placed immediately after excavation has been completed and approved.
   c. Protect excavation from frost if placing of concrete or fill is delayed.
   d. Where a concrete slab is a base slab-on-grade located under and within a structure that will not be heated, protect subgrade under the slab from becoming frozen until final acceptance of the Project by Owner.
   e. Protect subgrade under foundations of a structure from becoming frozen until structure is completed and heated to a temperature of at least 50 DegF.

B. Fill and Backfill Inside of Structure and Below Foundations, Base Slabs, Floor Slabs, Equipment Support Pads and Piping:
   1. General:
      a. Subgrade to receive fill or backfill shall be free of undesirable material as determined by Owner and scarified to a depth of 12 IN and compacted to density specified herein.
      b. Surface may be stepped by at not more than 12 IN per step or may be sloped at not more than 2 percent.
      c. Do not place any fill or backfill material until subgrade under fill or backfill has been inspected and approved by Owner as being free of undesirable material and compacted to specified density.
   2. Granular fill under floor slabs-on-grade: Place all floor slabs-on-grade on a minimum of 6 IN of granular fill unless otherwise indicated.
   3. Fill and backfill placement:
      a. Place fill and backfill material in thin lifts as necessary to obtain required compaction density.
      b. Compact material by means of equipment of sufficient size and proper type to obtain specified density.
      c. Use hand operated equipment for filling and backfilling next to walls.
      d. Do not place fill and backfill when the temperature is less than 40 DegF and when subgrade to receive fill and backfill material is frozen, wet, loose, or soft.
      e. Use vibratory equipment to compact granular material; do not use water.
   4. Where fill material is required below foundations, place fill material, conforming to the required density and moisture content, outside the exterior limits of foundations located around perimeter of structure the following horizontal distance whichever is greater:
      a. As required to provide fill material to indicated finished grade.
      b. 5 FT.
      c. Distance equal to depth of compacted fill below bottom of foundations.
      d. As directed by Owner.
C. Filling and Backfilling Outside of Structures.
   1. Fill and backfill placement:
      a. Prior to placing fill and backfill material, obtain optimum moisture and maximum density properties for proposed material from Owner's Representative.
      b. Place fill and backfill material in thin lifts as necessary to obtain required compaction density.
      c. Compact material with equipment of proper type and size to obtain density specified.
      d. Use only hand operated equipment for filling and backfilling next to walls and retaining walls.
      e. Do not place fill or backfill material when temperature is less than 40 DegF and when subgrade to receive material is frozen, wet, loose, or soft.
      f. Use vibratory equipment for compacting granular material; do not use water.
   2. Backfilling against walls:
      a. Do not backfill around any part of structures until each part has reached specified 28-Day compressive strength and backfill material has been approved.
      b. Do not start backfilling until concrete forms have been removed, trash removed from excavations, pointing of masonry work, concrete finishing, dampproofing and waterproofing have been completed.

c. Do not place fills against walls until floor slabs at top, bottom, and at intermediate levels of walls are in place and have reached 28-Day required compressive strength to prevent wall movement.
d. Bring backfill and fill up uniformly around the structures and individual walls, piers, or columns.

D. Backfilling Outside of Structures Under Piping or Paving:
1. When backfilling outside of structures requires placing backfill material under piping or paving, the material shall be placed from bottom of excavation to underside of piping or paving at the density required for fill under piping or paving as indicated in this Section 02300.
2. This compacted material shall extend transversely to the centerline of piping or paving a horizontal distance each side of the exterior edges of piping or paving equal to the depth of backfill measured from bottom of excavation to underside of piping or paving.
3. Provide special compacted bedding or compacted subgrade material under piping or paving as indicated on drawings.

3.6 SPECIAL REQUIREMENTS

A. Erosion Control:
1. Conduct Work to minimize erosion of Site.
2. Construct stilling areas to settle and detain eroded material.
3. Remove eroded material washed off Site.

END OF SECTION

SECTION 02316

TRENCHING, BACKFILLING, AND COMPACTING FOR UTILITIES

PART 1 GENERAL

1.1 SUMMARY

A. Section Includes:
   1. Excavation, trenching, backfilling and compacting for all underground utilities.

1.2 REFERENCES

A.	ASTM D4253	Standard Test Methods for Maximum Index Density of Soils Using a Vibratory Table
B.	ASTM D4254	Minimum Index Density of Soils and Calculation of Relative Density
C.	California Test Method 216 (modified)	Relative Compaction of Untreated and Treated Soils and Aggregates
D.	California Test Method 231 (modified)	Relative Compaction of Untreated/Treated Soils and Aggregates (Area Concept Utilizing Nuclear Gauges)

1.3 DEFINITIONS

A. California Test Method 216 (modified): Relative Compaction of Untreated and Treated Soils and Aggregates as modified by Owner per Section 01450 (Quality Control).
B. California Test Method 231 (modified): Relative Compaction of Untreated/Treated Soils and Aggregates (Area Concept Utilizing Nuclear Gauges) as modified by Owner per Section 01450 (Quality Control).

1.4 SUBMITTALS

A. Shop Drawings:
   1. Submit respective pipe or conduit manufacturer's data regarding bedding methods of installation and general recommendations.
B. Product Data:
   1. Acknowledgement that products submitted meet requirements of standards referenced.
   2. Submit respective pipe or conduit manufacturer's data regarding bedding methods of installation and general recommendations.
C. Quality Assurance/Control Submittals:
   1. Test Reports:
      a. Submit test reports and fully document each with specific location or stationing information, date, and other pertinent information.
      b. Submit sieve analysis reports on all granular materials.
   2. Certificates:
      a. Current certification of trench shields (trench boxes) if employed for trench shoring.
   3. Design Calculations:
      a. Calculations and plans stamped and signed by a civil or structural engineer registered as a Professional Engineer in the State of California, for any trench shoring that varies from the shoring system standards.

1.5 SITE CONDITIONS

A. Avoid overloading or surcharge a sufficient distance back from edge of excavation to prevent slides or caving. Maintain and trim excavated materials in such manner to be as little inconvenience as possible to public and adjoining property owners.

PART 2 PRODUCTS

2.1 MATERIALS

A. Trench Backfill Material:
   1. Meeting requirements of engineered fill per Section 02300 (Earthwork).
B. Subgrade Stabilization Materials: Provide subgrade stabilization per Section 02300 (Earthwork).
C. Pipe Embedment Materials:
   1. Minimum sand equivalent value: 30.
   2. Maximum sand equivalent value: 75.
   3. Minimum durability: 40.
   4. Free of asphaltic material.
   5. Conforming to following gradation:

Sieve Size	1 inch	3/4 inch	3/8 inch	No.4	No.20
Percent Passing by Weight	100	80-100	30-80	5-30	0-5

PART 3 EXECUTION

3.1 GENERAL

A. Remove and dispose of unsuitable materials to site provided by Contractor.
B. Regulations: The Contractor is cautioned that the County of Sonoma and cities within the County have regulations governing the disposal of rubble, broken pavement, and similar materials. The Contractor is also cautioned that placement of fill in wetland areas is subject to permit procedures of the US Army Corps of Engineers. The Contractor shall become familiarized with the requirements of the agency having jurisdiction over any contemplated disposal site and shall comply with all such requirements.

3.2 EXCAVATION

A. Excavation:
   1. Remove rock excavation, clay, silt, gravel, hard pan, loose shale, and loose stone as directed by Owner.
B. Excavation for Appurtenances:
   1. 12 IN (minimum) clear distance between outer surface and embankment.
   2. See Section 02300 (Earthwork) for applicable requirements.
C. Trench Excavation:
   1. Excavate trenches by open cut method to depth as indicated on Drawings and necessary to accommodate work.
   2. All trenches must be covered at the end of each work day or week depending on location of trench. Coordinate with Owner. Trenches are to include safety barriers and signage where required.

3. Any trench or portion of trench, which is opened and remains idle for 7 Days, or longer, as determined by the Owner, may be directed to be immediately refilled, without completion of work, at no additional cost to Owner. Said trench may not be reopened until Owner is satisfied that work associated with trench will be prosecuted with dispatch.
4. Observe following trenching criteria:
   a. Trench size.
      1) Excavate width to accommodate free working space.
      2) Maximum trench width at top of conduit may not exceed outside diameter of utility service by more than 18 inches.
      3) Cut trench walls vertically from bottom of trench to 1 foot above top of pipe, conduit, or utility service.
      4) Keep trenches free of water.

D. Trenching for Electrical Installations:
   1. Comply with paragraph 3.2 C "Trench Excavation" except as modified by the following:
      a. Open no more than 600 lineal feet of trench in exterior locations for trenches more than 12 inches but not more than 30 inches wide.
      b. Any length of trench may be opened in exterior locations for trenches which are 12 inches wide or less.
      c. Do not over excavate trench.
      d. Cut trenches for electrical runs with minimum 30 inches cover, unless otherwise specified.
      e. See Division 16 for additional requirements.

3.3 PREPARATION OF FOUNDATION FOR PIPE LAYING

A. Subgrade Stabilization:
   1. Stabilize the subgrade when directed by the Owner.
   2. Observe the following requirements when unstable trench bottom materials are encountered.
      a. Notify Owner when unstable materials are encountered.
         1) Define by drawing station locations and limits.
      b. Remove unstable trench bottom caused by Contractor failure to dewater, rainfall, or Contractor operations.
         1) Replace with subgrade stabilization with no additional compensation.

3.4 BACKFILLING METHODS

A. Do not backfill until tests to be performed on system show system is in full compliance to specified requirements.
B. Pipe Embedment:
   1. Furnish where indicated on Drawings, specified for trench embedment conditions and for compacted backfill conditions up to 12 inches above top of pipe or conduit.
   2. Comply with the following:
      a. Place backfill in lifts not exceeding 8 inches (loose thickness).
      b. Hand place, shovel slice, and pneumatically tamp all carefully compacted backfill.
      c. Comply with specific manufacturer's recommendations regarding backfilling and compaction.
      d. Compact each lift to specified requirements.

C. Trench Backfill:
   1. Perform in accordance with the following:
      a. Place backfill in lift thicknesses capable of being compacted to densities specified.
      b. Comply with specific manufacturer's recommendations regarding backfilling and compaction.
      c. Avoid displacing joints and appurtenances or causing any horizontal or vertical misalignment, separation, or distortion.
D. Water flushing for consolidation is not permitted.
E. Backfilling for Electrical Installations:
   1. Comply with paragraphs 3.4 C and D.

3.5 COMPACTION

A. General:
   1. Place and assure bedding, backfill, and fill materials achieve an equal or "higher" degree of compaction than undisturbed materials adjacent to the work.
   2. In no case shall degree of compaction below "Minimum Compaction" specified be accepted.
B. Compaction Requirements: Except in reservoir embankments and beneath structures where more stringent compaction is required by Section 02300 (Earthwork).

MINIMUM COMPACTIONS		
LOCATION	**SOIL TYPE**	**DENSITY**
1. Pipe Embedment Material:		
All Locations	Cohesionless Soils	80 percent of max relative density by ASTM D4253 and D4254
2. Trench Backfill:		
Under pavement or gravel roadway surfaces	Cohesive soils (within 3 feet of finished grade)	95 percent of max dry density by California Tests 216 (modified) and 231 (modified)
	Cohesive soils (3 feet from finished grade and below)	90 percent of max dry density by California Tests 216 (modified) and 231 (modified)
Under non-traffic areas	Cohesive soils	90 percent of max dry density by California Tests 216 (modified) and 231 (modified)

3.6 FIELD QUALITY CONTROL

A. Owner Testing:
   1. Owner may perform in-place moisture-density tests after receiving written request from Contractor.

2. Assure Owner has immediate access for testing of all soils related work.
3. Ensure excavations are safe for testing personnel.
4. If Owner conducts tests, density testing will be performed in accordance with California Test Method 216 (modified) and California Test Method 231 (modified).
5. Minimum compaction requirements as stated in Paragraph 3.5 are maximum dry density. Owner/Contractor may test compaction using wet density relationships. If wet density testing is to be utilized, the Contractor will be responsible for providing conversion charts between dry/wet density compaction requirements.

END OF SECTION

SECTION 02370

SOIL EROSION AND SEDIMENTATION CONTROL

PART 1 GENERAL

1.1 SUMMARY

A. Section Includes:
   1. Soil erosion and sediment control.

1.2 REFERENCES

A. Erosion Control Standards	"Standards and Specifications for Soil Erosion and Sediment Control in Developing Areas" by the U.S. Department of Agriculture, Soil Conservation Service, College Park, Maryland

PART 2 PRODUCTS

2.1 MATERIALS

A. Straw bales, twine tied.
B. Pipe Riser and Barrel: 16 GA corrugated metal pipe (CMP) of size indicated.
C. Stone for Stone Filter: 2 IN graded gravel or crushed stone.

PART 3 EXECUTION

3.1 PREPARATION

A. Prior to General Stripping Topsoil and Excavating:
   1. Install perimeter dikes and swales.
   2. Excavate and shape sediment basins and traps.
   3. Construct pipe spillways and install stone filter where required by Owner's Representative.
   4. Machine compact all berms, dikes and embankments for basins and traps.
   5. Install straw bales where directed by Owner's Representative.
      a. Provide two stakes per bale.
      b. First stake angled toward previously installed bale to keep ends tight against each other.
      c. A maximum of 40 straw bales will be required.
B. Construct sediment traps during rough grading as grading progresses.

3.2 DURING CONSTRUCTION PERIOD

A. Maintain Basins, Dikes, Traps, Stone Filters, Straw Bales:
   1. Inspect regularly especially after rainstorms.
   2. Repair or replace damaged or missing items.
B. After rough grading, sow temporary grass cover over all exposed earth areas not draining into sediment basin or trap.
C. Construct inlets as soon as possible.
   1. Excavate and tightly secure straw bales completely around inlets as directed by Owner.

D. Provide necessary swales and dikes to direct all water towards and into sediment basins and traps.
E. Do not disturb existing vegetation (grass and trees).
F. Excavate sediment out of basins and traps when capacity has been reduced by 50 percent.
   1. Remove sediment from behind bales to prevent overtopping.
G. Topsoil and Fine Grade Slopes and Swales:
   1. Seed and mulch as soon as areas become ready.

3.3 NEAR COMPLETION OF CONSTRUCTION

A. Eliminate basins, dikes, traps.
B. Grade to finished or existing grades.
C. Fine grade all remaining earth areas, then seed and mulch.

END OF SECTION

SECTION 02605

HIGH-DENSITY POLYETHYLENE (HDPE) MEMBRANE LINER

PART 1 GENERAL

1.1 SUMMARY

A. Section Includes:
   1. Furnishing, installation, quality control, and testing of a HDPE geomembrane liner.

B. Related Sections:
   1. Section 02300 (Earthwork)

1.2 REFERENCES

A.	ASTM D413	Standard Test Methods for rubber Property - Adhesion to Flexible Substrate
B.	ASTM 792	Standard Test Methods for Density and Specific Gravity (Relative Density) of Plastics by Displacement
C.	ASTM D882	Standard Test Method for Tensile Properties of Thin Plastic Sheeting
D.	ASTM D1004	Standard Test Method for Initial Tear Resistance of Plastic Film and Sheeting
E.	ASTM D1505	Standard Test Method for Density of Plastics by the Density-Gradient Technique
F.	ASTM D1603	Standard Test Method for Carbon Black Content in Olefin Plastics
G.	ASTM D3895	Standard Test Method for Oxidative-Induction Time of Polyolefins by Differential Scanning Calorimetry
H.	ASTM D4218	Standard Test Method for Determination of Carbon Black Content in Polyethylene Compounds by the Muffle-Furnace Technique
I.	ASTM D4437	Standard Practice for Determining the Integrity of Field Seams Used in Joining Flexible Polymeric Sheet Geomembranes
J.	ASTM D4833	Standard Test Method for Index Puncture Resistance of Geotextiles, Geomembranes and Related Products
K.	ASTM D5199	Standard Test Method for Measuring the Nominal Thickness of Geosynthetics
L.	ASTM D5397	Standard Test Method for Evaluation of Stress Crack Resistance of Polyolefin Geomembranes Using Notched Constant Tensile Load Test
M.	ASTM D5596	Standard Test Method for Microscopic Evaluation of the Dispersion of Carbon Black in Polyolefin Geosynthetics
N.	ASTM D5641	Standard Practice for Geomembrane Seam Evaluation by Vacuum Chamber
O.	ASTM D5721	Standard Practice for Air-Oven Aging of Polyolefin Geomembranes
P.	ASTM D5820	Standard Practice for Pressurized Air Channel Evaluation of Dual Seamed Geomembranes

Q.	ASTM D5885	Standard Test Method for Oxidative Induction Time of Polyolefin Geosynthetics by High-Pressure Differential Scanning Calorimetry
R.	ASTM D6392	Standard Test Method for Determining the Integrity of Nonreinforced Geomembrane Seams Produced Using Thermo-Fusion Methods
S.	ASTM D6693	Standard Test Method for Determining Tensile Properties of Nonreinforced Polyethylene and Nonreinforced Flexible Polypropylene Geomembrances
T.	USEPA 530/SW-91	Inspection Techniques for Fabrication of Geomembrane Field Seams, EPA/530/SW-91/051, May 1991
U.	USEPA	Quality Assurance and Quality Control for Waste Containment Facilities, EPA/600/R-93/182, September 1993
V.	GRI GM11	Accelerated Weathering of Geomembranes Using a Fluorescent UVA-Condensation Exposure Device
W.	GRI GM12	Asperity Measurement of Textured Geomembranes Using a Depth Gage
X.	GRI GM13	Test Methods, Test Properties and Testing Frequency for High Density Polyethylene (HDPE) Smooth and Textured Geomembranes

1.3 DEFINITIONS

A. Manufacturer:
   1. Manufacturer producing geomembrane sheets from resin and additives.
B. Installer:
   1. The Installers are the individuals actually performing the hands-on Work in the field.
C. Inspector:
   1. Inspectors of HDPE geomembrane are the individuals responsible for observing field installation of the geosynthetic materials and providing the Manufacturer, Fabricator, Installer, and Owner with verbal and written documentation of the compliance of the installation with this Specification and with written procedures manuals prepared by the Manufacturer or Installer.
D. Independent Testing Laboratory:
   1. The firm hired by the Contractor to perform destructive testing of the HDPE geomembrane.
   2. Firm shall be acceptable to Owner.

1.4 SUBMITTALS

A. Shop Drawings:
   1. Submit for Owner approval Shop Drawings, including:
      a. Manufacturer's certification that raw materials and sheet materials comply with required materials, mil thickness, and material properties.
         1) Original certificates are required.
      b. Manufacturer/Fabricator/Installer quality control requirements.
      c. Qualifications and experience of key personnel involved in installation/inspection of the geosynthetic materials and geosynthetic liner system.
      d. HDPE Geomembrane layout plan with proposed size, number, position and sequencing of liner panels and showing the location and direction of all field or factory joints.

1) Proposed details for connecting the geosynthetic materials to appurtenances.
2) Proposed methods of welding, seaming or jointing geosynthetic materials.
3) Proposed method of testing HDPE geomembrane and other geosynthetic materials, joints and connections at appurtenances for continuity.
4) Proposed details for anchor trench if different than included in Contract Documents.

B. Miscellaneous:
1. Test results:
a. Resin test, tests of sheet material and factory seam tests at frequency specified in respective quality control manuals.
1) Results shall include or bracket the rolls delivered for use in the Work.
b. Daily test seam results.
c. Daily results of production seam testing.
2. Submit written certifications that:
a. The HDPE geomembrane material delivered to Site meets the requirements of this Section 02605.
b. The HDPE geomembrane was received and accepted in undamaged condition from shipper.
c. The subgrade has been properly prepared and acceptable for the placement of the HDPE geomembrane.
d. The HDPE geomembrane liner was installed in accordance with this Specification and with approved Shop Drawings.
e. The HDPE geomembrane joints were inspected, tested for strength and continuity, and passed all inspections and tests.
1) All test and inspection data shall be incorporated into this certification.
f. The drainage layer, geotextiles and protective soil cover layer on top of the HDPE geomembrane liner was placed properly and carefully if required.

C. Closeout Submittals:
1. Special warranties as described in paragraph 1.6 of this Section 02605.

1.5 DELIVERY, STORAGE, AND HANDLING

A. Unused or stockpiled HDPE geomembrane shall be stored in accordance with the manufacturer's recommendations.
B. Each roll shall be labeled with the manufacturers name, type, lot number, roll number, and roll dimensions (length, width, gross weight).
1. HDPE geomembrane or plastic wrapping damaged as a result of storage or handling shall be repaired or replaced, as directed.
2. HDPE geomembrane shall not be exposed to temperatures in excess of 60 DegC (140 DegF) or less if recommended by the Manufacturer.

C. No hooks, tongs or other sharp instruments shall be used for handling the HDPE geomembrane.
1. Rolls shall not be lifted by use of cables or chains in contact with the HDPE geomembrane.
2. HDPE geomembrane shall not be dragged along the ground.

1.6 WARRANTY

A. Written warranties addressing HDPE geomembrane material and installation workmanship shall be furnished by the Contractor and shall be made to Owner.
B. Submit material samples and warranties prior to shipment.

C. Suitability of geosynthetic liner system shall be subject to Owner approval of warranty.
   1. The Manufacturer's warranty shall state that the furnished material meets all requirements of the Contract Drawings and Specifications, and that under exposure to liquids identified in the Contract Documents and local atmospheric conditions the sheet material is warranted for 20 years, prorated.
   2. The Installer's warranty shall state that the materials were properly installed, properly (field and factory) welded, seamed and jointed and will not fail within two years of the installation under similar conditions.
      a. Warranty shall not be prorated.
D. Warranties shall provide for complete repair/replacement at no additional cost to the Owner for the warranty period.

1.7 SITE CONDITIONS

A. When the weather is of such a nature as to endanger the integrity and quality of the installation whether this is due to rain, high winds, cold temperatures, or other weather elements, the installation shall be halted until the weather conditions are satisfactory.
B. The Contractor shall ensure that adequate dust control methods are in effect to prevent the unnecessary accumulation of dust and dirt on surfaces which hamper efficient field seaming or performance.
C. Maintain surface water drainage diversions around the Work area and provide for the disposal of water which may collect in the Work area directly from precipitation falling within the area or from inadequate diversion structures or practices.
D. Vehicles, other than those specifically approved, will not be allowed on HDPE membrane liner.

1.8 QUALITY ASSURANCE

A. Owner will conduct independent testing to support construction quality assurance program and to provide documentation of such to appropriate regulatory agencies.
B. Unless specifically superseded by these Contract Documents or approved plans submitted by the Contractor, the geosynthetic materials shall be manufactured, stored, placed, seamed, tested and protected as described in EPA/600/R-93/182 and EPA/530/SW-91/051.
   1. This specifically includes:
      a. Material Composition.
      b. Manufacturing.
      c. Handling and Packaging.
      d. Shipment.
      e. Storage (Manufacturer and Site).
      f. Placement:
         1) Seaming and Joining.
         2) Destructive and Non Destructive Testing.
         3) Protection, Backfilling and Covering.
      g. Conformance Testing.
      h. Anchoring and Anchor Trenches.
      i. Access Roads/Ramps.

PART 2 PRODUCTS

2.1 ACCEPTABLE MANUFACTURERS AND INSTALLERS

A. Subject to compliance with the Contract Documents, the following manufacturers are acceptable:
   1. HDPE Geomembrane liners manufacturers:
      a. GSE Lining Technology, Inc., 19103 Gundle Rd., Houston, Texas 77073.
      b. Agru America, Inc., 500 Garrison Road, Georgetown, South Carolina 29440.
      c. Poly-Flex, Inc., 2000 West Marshall Drive, Grand Prairie, Texas 75051.
      d. Or Approved Equal.

2.2 MATERIALS

A. HDPE Geomembrane Liner:
   1. Consist of unreinforced polyethylene.
      a. Thickness: 60 mils.
      b. Manufactured from virgin, first quality resin designed and formulated specifically for liquid containment in hydraulic structures.
      c. Reclaimed polymer shall not be added to the resin; except use of polymer recycled during the manufacturing process shall be allowed provided that recycled polymer shall be clean and shall not exceed 2 percent by weight.
      d. No additives or fillers may be added to the resin prior to or during manufacture of the HDPE geomembrane.
   2. Manufactured to be free of holes, blisters, undispersed raw materials, or any sign of contamination by foreign matter.
      a. Any such defects shall be cause for rejection of the material.
      b. Minor defects may be repaired in accordance with Manufacturer's recommendations if approved by Owner.
   3. Manufactured as seamless rolls or as prefabricated panels.
      a. Minimum width: 22 FT as delivered to the Site.
   4. Specifications:
      a. HDPE geomembrane shall possess properties which meet or exceed the following minimum requirements:

PROPERTY	TEST METHOD	TEST VALUE 60 Mils	TESTING FREQUENCY (minimum)
Thickness (Min. ave.) ● Lowest individual of 10 values	D5199	Nom. -10%	Per roll
Density mg/l (min.)	D1505/D792	0.940 g/cc	200,000 lb
Tensile Properties *(1)* (min. ave.) ● yield strength ● Break strength ● yield elongation ● break elongation	D6693 Type IV	 126 lb/in. 228 lb/in. 12% 700%	20,000 lb
Tear Resistance (min. ave.)	D1004	42 lb	45,000 lb
Puncture Resistance (min. ave.)	D4833	108 lb	45,000 lb
Stress Crack Resistance *(2)*	D5397 (app.)	300 hr.	per GRI-GM10
Carbon Black Content (range)	D1603 *(3)*	2.0-3.0%	20,000 lb
Carbon Black Dispersion	D5596	Note *(4)*	45,000 lb

PROPERTY	TEST METHOD	TEST VALUE 60 Mils	TESTING FREQUENCY (minimum)
Oxidative Induction time (OIT) (min. ave.) *(5)*			200,000 lb
(a) Standard OIT	D3895	100 min.	
- or -			
(b) High Pressure OIT	D5885	400 min.	
Oven Aging at 85 DegC *(5), (6)*	D5721		
(a) Standard OIT (min. ave.) - % retained after 90 Days	D3895	55%	Per each formulation
- or -			
(b) High Pressure OIT (min. ave.) - % retained after 90 Days	D5885	80%	
UV Resistance *(7)*	GM11		
(a) Standard OIT (min. ave.)	D3895	N.R. *(8*	Per each formulation
- or -			
(b) High Pressure OIT (min. ave.) - % retained after 16000 hrs *(9)*	D5885	50%	

Notes:

(1) Machine direction (MD) and cross machine direction (XMD) average values should be on the basis of 5 test specimens each direction:
  (i) Yield elongation is calculated using a gage length of 1.3 IN.
  (ii) Break elongation is calculated using a gage length of 2.0 IN.

(2) The yield stress used to calculate the applied load for the SP-NCTL test shall be the manufacturer's mean value via MQC testing.

(3) Other methods such as ASTM D4218 (muffle furnace) or microwave methods are acceptable if an appropriate correlation to ASTM D1603 (tube furnace) can been established.

(4) Carbon black dispersion (only near spherical agglomerates) for 10 different views: 9 in Categories 1 or 2 and 1 in Category 3.

(5) The manufacturer has the option to select either one of the OIT methods listed to evaluate the antioxidant content in the geomembrane.

(6) It is also recommended to evaluate samples at 30 and 60 Days to compare with the 90 Day response.

(7) The condition of the test should be 20 hr. UV cycle at 75 DegC followed by 4 hr. condensation at 60 DegC.

(8) Not recommended since the high temperature of the Std-OIT test produces an unrealistic result for some of the antioxidants in the UV exposed samples.

(9) UV resistance is based on percent retained valve regardless of the original HP-OIT value.

2.3 EQUIPMENT AND ACCESSORIES

A. Welding and Seaming Equipment:
   1. Equipped with gages showing temperatures at the nozzle (extrusion welder) or at the wedge (wedge welder).
   2. Maintained in adequate numbers to avoid delaying Work.
   3. Supplied by a power source capable of providing constant voltage under a combined-line load.
   4. Electric generator shall not be placed directly on the HDPE geomembrane and must have rub sheet placed underneath.

B. Field Tensiometer:
   1. Provide a tensiometer for on-Site shear and peel testing of HDPE geomembrane seams.
      a. Tensiometer shall be in good working order.
      b. Tensile testing required on field tensiometers per ASTM D6392.
      c. Accompanied by evidence of calibration of equipment and gages within the past twelve months.
   2. Tension meter:
      a. Motor driven.

b. Jaws capable of traveling a measure rate of 2 IN per minute.
c. Equipped with a gauge that measures the force in unit pounds exerted between the jaws.
d. Digital readout.

C. Punch Press:
1. Provide a punch press for the on-Site preparation of specimens for testing.
2. Capable of cutting specimens in accordance with ASTM D4437.

D. Vacuum Box:
1. Provide a vacuum box for on-Site testing of HDPE geomembrane seams in accordance with ASTM D5641.

E. Equipment necessary to perform "Pressurized Air Channel Evaluation of Dual Seamed Geomembranes" in accordance with ASTM D5820.

F. Gages:
1. Calibrated within past six months.
2. Specified test values reading near mid-range of the gage scale.

2.4 FABRICATION

A. Produce geomembrane sheet which complies with this Section 02605.

B. Provide resin and additive quality control:
1. Test raw resin and additives to ensure compliance with the Manufacturer's specifications and with this Section 02605.
2. Test sheet material to ensure compliance with Manufacturer's specification and this Section 02605.
3. Provide certification of the raw materials and finished sheet demonstrating compliance with this Section 02605.
4. Provide certification of Fabricator's and Installer's training (unless Installer is certified by other acceptable manufacturer list herein), experience and methods for welding, seaming, jointing and inspecting geosynthetic materials installations in compliance with Manufacturer's standards and with this Section 02605.

C. Fabricated Specials:
1. Subject to same level of manufacturer's quality control.
2. Fabricated from project rolls.
a. Provide traceability of resin and roll stock.

PART 3 EXECUTION

3.1 GEOSYNTHETIC LINER SYSTEM

A. Geomembrane Subgrade:
1. Protect subgrade at all times from damage until such time as the placement of HDPE geomembrane liner and other components of the geosynthetic liner system are complete.
2. The subgrade shall be prepared in a manner consistent with proper subgrade preparation techniques for the installation of HDPE Geomembrane.
a. The subgrade shall be properly compacted so as not to settle and cause excessive strains in the HDPE Geomembrane or other synthetic liner materials.
b. Prior to installation, ensure a surface free of debris, roots, or angular stones larger than 1/2 inch.
c. Prior to installation, ensure that the subgrade has been rolled to provide a uniform surface.

d. During installation, ensure that rutting or ravelling is not caused by installation equipment or weathering.

B. Anchor Trenches:
1. Geosynthetic materials placed on side slopes shall be anchored into trenches as indicated.
2. Excavation, backfill and compaction shall be in accordance with Section 02300 (Earthwork).

C. HDPE Geomembrane:
1. General:
a. Installer of HDPE geomembranes is responsible for handling, fitting, welding, seaming, jointing and testing of geosynthetic materials sheets or blankets in the field.
b. These responsibilities include but are not limited to:
1) Acceptance (in writing) of the soil or geosynthetic clay liner subgrade which will serve as a base for the HDPE geomembrane.
(a) This acceptance shall precede installation of the HDPE geomembrane.
(b) Shall state that the Installer has inspected the surface, and reviewed the Specifications for material and placement, and finds all conditions acceptable for placement of HDPE geomembrane liners.
(c) Shall explicitly state any and all exceptions to acceptance.
2) Handling, welding, seaming, jointing, testing and repair of HDPE geomembrane liners and other geosynthetic materials in compliance with this Section 02605, and with written procedures manuals prepared by the Manufacturer or Fabricator.
(a) Manual shall be submitted to Owner together with Shop Drawings showing the layout of HDPE geomembrane within the facility.
(i) Do not deviate from the procedures included in the manual.
(b) HDPE Geomembrane shall not be placed upon frozen foundation, standing water or other conditions which will result in deterioration of the foundation.
(c) HDPE Geomembrane liner materials shall be laid out according to plans previously approved by Owner.
(d) Adjacent rolls of HDPE geomembrane shall overlap a minimum of 3 IN, provided that greater overlap may be required to allow seaming in accordance with the Manufacturer's instructions.
3) Repair or replacement of defects in the geosynthetic materials as required by the Inspector or Owner.
4) Installer and Manufacturer may be the same firm.
2. Panel deployment:
a. Only those panel/sheets that can be seamed in 1 Day shall be deployed.
b. Place panels with minimal handling.
1) Orient sheets to eliminate or minimize number of horizontal seams on side slopes.
2) Protect panels from tear, puncture or abrasion.
c. No vehicular traffic is permitted on unprotected HDPE geomembrane without Owner approval, after testing of proposed equipment.
d. Minimize foot traffic.
1) Do not allow personnel access to wet or slippery liners without adequate safety precautions.

e. Ballast with sandbags to prevent wind uplift as recommended by Manufacturer and Fabricator and based on local climatic conditions.
   1) Remove and replace all wind damaged panels at no additional cost to Owner.
   2) If wind causes panels to be displaced, displaced panel may not be reused without Owner approval.
f. Install HDPE geomembrane in stress free, tension free and relaxed condition.
   1) Account for temperature and weather-related impacts when deploying and covering.
   2) Stretching to fit and folding are not permitted.
g. Do not allow HDPE geomembrane to bubble, fold, or create ripples as a result of deployment of drainage layer or protective soil cover placement.
   1) Except as indicated, no folds in HDPE geomembrane will be allowed.
h. Any panel exhibiting stretching caused by placement, covering techniques, or wind shall be removed and may not be incorporated in the final construction.
i. Field seaming:
   1) Field seaming shall be done in accordance with seaming recommendations furnished by the geomembrane Manufacturer and referenced EPA documents.
   2) Each piece of seaming equipment and each operator shall perform demonstration seams at the start of a shift, whenever equipment is switched on or seaming is interrupted for more than thirty minutes, and at other times at the discretion of the Installer and Inspector.
   3) Demonstration seams shall use the same seaming materials and methods to be used in the actual construction.
   4) Surfaces to be seamed shall be clean and dry at the time of seaming.
      (a) Precipitation and ponding of water on the HDPE geomembrane shall cause termination of seaming operations.
      (b) HDPE geomembrane shall not be seamed when ambient temperatures are below 41 DegF or above 104 DegF, without written consent of HDPE geomembrane Manufacturer and Owner.
   5) HDPE geomembrane sheets shall be seamed continuously without fishmouths or breaks in the seam.
      (a) Where fishmouths are unavoidable, the sheet shall be slit to a point such that the sheet lies flat and with no remaining wrinkle.
      (b) The two edges of the slit shall be seamed together provided that the overlap for this seam shall be a minimum of 6 IN.
      (c) Areas of the slit which do not achieve an overlap of 6 IN, including the terminus of the slit, shall be provided with a patch as discussed below.
   6) All HDPE geomembranes shall be seamed by thermal fusion methods as recommended by the HDPE geomembrane Manufacturer.
      (a) HDPE geomembrane seaming shall be double wedge weld unless otherwise approved or prohibited by construction.
   7) Manufacturer's or Fabricator's seaming instructions shall specifically address subgrade preparation, seaming materials, temporary and permanent jointing, seaming temperatures including temperatures for seaming materials, seam finishing and curing.
   8) A copy of Manufacturer's or Fabricator's seaming instructions shall be available on Site at all times and shall not be deviated from without written approval of the Manufacturer and Owner’s Representative.

9) All panels/sheets should be overlapped a minimum of 3 IN.
   (a) If horizontal seams are required on side slopes, the upper panel should be lapped over the lower panel.
10) Seaming shall not be conducted in the presence of standing water and/or soft subgrades.
   (a) The seamed area shall be cleaned of dust, dirt and foreign material prior to and during the seaming operation.
11) Seaming shall extend to the outside edge of panels/sheets to be placed in anchor and/or drainage trenches.
12) Tack welds shall conform with manufacturers seaming techniques and shall not damage underlying membrane.

j. Patching:
   1) Defects in and damage to HDPE geomembrane sheets shall be repaired by seaming a patch over the defect.
      (a) The patch material shall consist of an undamaged piece of HDPE geomembrane cut to provide a minimum of 6 IN of overlap in all directions from the defect.
      (b) Round corners shall be utilized on all patches.
         (i) No bead or spot patching will be accepted.
      (c) Torn or permanently twisted HDPE geomembrane shall be replaced at no expense to Owner.
   2) Test all patch seams using one of the following nondestructive tests: vacuum tests; spark tests; or ultrasonic tests.
      (a) Test patch seams destructively at a frequency of ten percent or a minimum of one test per seaming personnel per Day.
      (b) This destructive testing may be accomplished using demonstration seams performed adjacent to the liner installation.

3.2 FIELD QUALITY CONTROL

A. Inspector shall not be a part of the installation program and shall not serve as a substitute for performing the duties or certification required of the Fabricator and Installer.
   1. Inspectors responsibilities include, but are not limited to:
      a. Inspection of the material and the handling and field installation of the geomembranes.
         1) Inspection of all welds, repairs and quality control test results.
      b. All exceptions to material or installation shall be documented and furnished to Owner in writing within 48 HRS of discovery.
      c. Inspection and Certification of HDPE geomembrane integrity until completion of placement of protective soil cover.

B. Trial Seam Testing:
   1. Trial seams shall be made each half-Day prior to production seaming.
      a. The location of trial seam shall be in an area proposed for the Day's production seaming.
      b. Equipment, methods and personnel shall be the same as proposed for the Day's seaming.
   2. Samples shall be tested in accordance with ASTM D413 and ASTM D882.
      a. To be acceptable, five of five replicate test specimens must meet specified seam strength requirements and failures shall be Film Tear Bond.

b. If the field tests fail to meet these requirements, the entire operation shall be repeated.
c. If the additional test seams fail, the seaming apparatus or seamer shall not be accepted or used for seaming until the deficiencies are corrected and two consecutive successful test seams are achieved.

C. Non-Destructive Seam Testing:
1. All field seams shall be non-destructively tested over their full length.
a. Seam testing shall be performed as the seaming Work progresses, not at the completion of field seaming.
b. All testing shall be documented.
1) Any seams which fail shall be repaired and documented.
2. Non-destructively test all field seams continuously using one of the following nondestructive seam tests: vacuum box; ultrasonic tests; spark tests; and pressurized air channel test.

D. Destructive Seam Testing:
1. A minimum of one destructive test sample per 500 LF of seam, and as many other samples as Owner determines appropriate, shall be obtained at locations specified by Owner.
a. Sample locations shall not be identified prior to seaming.
b. The samples shall be a minimum of 12 IN wide by 48 IN long with the seam centered lengthwise.
c. Each sample shall be cut into three equal pieces with one piece retained by the Installer, one piece given to an Independent Testing Laboratory, and the remaining piece given to Owner for quality assurance testing and/or permanent record.
d. Each sample shall be numbered and recorded on the final panel layout record drawing, and cross-referenced to a field log which identifies:
1) Panel/sheet number.
2) Seam number.
3) Top sheet.
4) Date and time cut.
5) Ambient temperature.
6) Seaming unit designation.
7) Name of seamer.
8) Seaming apparatus temperature and pressures (where applicable).
2. A minimum of four 1 IN wide replicate specimens shall be cut from the Installer's sample.
a. A minimum of 2 specimens shall be tested for shear strength and 2 for peel adhesion using an approved field quantitative tensiometer.
1) Jaw separation speed shall be 2 IN per minute.
b. To be acceptable, all replicate test specimens must meet the specified seam strength requirements and fail as Film Tear Bond.
c. If the field tests pass, 5 specimens shall be tested at the Independent Testing Laboratory for shear strength and 5 for peel adhesion in accordance with ASTM D6392.
d. To be acceptable, 4 out of 5 replicate test specimens must meet the specified seam strength requirements and fail as Film Tear Bond.

3. The minimum required seam strengths:

MINIMUM MODE	TEST METHOD	VALUE(LBS/IN)
Shear	ASTM D6392	120
Peel	ASTM D6392	88

4. If the field tests pass, 5 specimens shall be tested at the Independent Testing Laboratory for shear strength and 5 for peel adhesion in accordance with ASTM D6392.
   a. To be acceptable, 4 out of 5 replicate test specimens must meet the specified seam strength requirements and fail as Film Tear Bond.
   b. If the field or laboratory tests fail, the seam shall be repaired in accordance with the Manufacturer's Quality Control manual.
   c. In addition, all destructive seam sample holes shall be repaired the same Day as cut.
   d. Certified test results on all field seams shall be submitted to and approved by Owner prior to acceptance of the seam.
5. Ten percent of all repaired areas shall be destructively tested.
   a. All repaired areas shall be non-destructively tested.
6. Destructive testing shall be performed by an Independent Testing Laboratory employed by the Contractor, not the Installer.
   a. Owner may separately conduct destructive testing for quality assurance if warranted.
   b. If samples tested by Owner fail, based on above criteria, seam will be classified as failed.
7. A map showing the locations, number and type of all patches shall be prepared and provided to Owner.

3.3 GEOSYNTHETIC LINER SYSTEM ACCEPTANCE

A. Contractor shall retain all ownership and responsibility for the geosynthetic liner system until final acceptance by Owner.
   1. Owner will accept the geosynthetic liner system installation when the installation is finished and all required warranties, test results, and documentation from the Contractor, Manufacturer, Inspector and Installer has been received and approved, and verification of the adequacy of all field seams and repairs, including associated testing, is complete.
   2. Upon completion and acceptance of geomembrane installation, the Contractor shall fill the ponds with water to approximately one foot of depth.

END OF SECTION

SECTION 02745

ASPHALTIC CONCRETE VEHICULAR PAVING

PART 1 GENERAL

1.1 REFERENCES

A. Caltrans 19 Caltrans Standard Specification for Earthwork
B. Caltrans 26 Caltrans Standard Specification for Aggregate Bases
C. Caltrans 37 Caltrans Standard Specification for Bituminous Seals
D. Caltrans 39 Caltrans Standard Specification for Asphalt Concrete
E. Caltrans 92 Caltrans Standard Specification for Asphalts

1.2 SUBMITTALS

A. Product Data:
   1. Acknowledgement that products submitted meet requirements of standards referenced.
   2. Manufacturer's installation instructions.
   3. Asphalt design mix.
B. Quality Assurance/Control Submittals:
   1. Test Reports:
   1. Gradation test results: Caltrans 26.
   2. Sand equivalence test results: Caltrans 26.
   3. Resistance (R-Value) test results: Caltrans 26.
   4. Durability index: Caltrans 26.

PART 2 PRODUCTS

2.1 MATERIALS

A. Asphaltic Concrete: Per Caltrans 39.
   1. Type B, 1/2 IN maximum aggregate size, medium gradation.
B. Aggregate Base: Per Caltrans 26.
   1. Class 1, 3/4 IN maximum.
C. Fog Seal: Per Caltrans 37.

2.2 MIXES

A. Comply with mix design category PG 64-16, Caltrans 92.

PART 3 EXECUTION

3.1 INSTALLATION

A. Construct to line, grade and section as indicated and in accordance with Caltrans 19.
B. Install an 8 IN compacted layer of aggregate base course, in accordance with Caltrans 26.
C. Install a 3 IN course of asphaltic concrete, in accordance with Caltrans 39.
D. Install a fog seal in accordance with Caltrans 37.
E. Tolerance of Finished Grade: ±0.10 FT from required elevations unless otherwise indicated.
F. Tolerance of Finished Grade where new paving or concrete Work meets existing: 0.02 FT from existing elevations.
G. Do not pave in wet weather or when rain is forecast.

H. Place drip pans or absorbent material under paving equipment when not in use.
I. Do not wash down fresh asphalt or concrete pavement.

END OF SECTION

SECTION 02825

CHAIN LINK FENCE AND GATES

PART 1 GENERAL

1.1 SUMMARY

A. Section Includes:
   1. Chain link fencing and gates.

1.2 REFERENCES

A.	ASTM A121	Standard Specification for Metallic-Coated Carbon Steel Barbed Wire
B.	ASTM A153	Standard Specification for Zinc Coating (Hot-Dip) on Iron and Steel Hardware
C.	ASTM A392	Standard Specification for Zinc-Coated Steel Chain-Link Fence Fabric
D.	ASTM A824	Standard Specification for Metallic-Coated Steel Marcelled Tension Wire for use with Chain-Link Fence
E.	ASTM F552	Standard Terminology Relating to Chain-Link Fencing
F.	ASTM F567	Standard Practice for Installation of Chain Link Fence
G.	ASTM F626	Standard Specification for Fence Fittings
H.	ASTM F900	Standard Specification for Industrial and Commercial Swing Gates
I.	ASTM F1043	Standard Specification for Strength and Protective Coatings on Metal Industrial Chain Line Fence Framework
J.	ASTM F1083	F1083, Standard Specification for Pipe, Steel, Hot-Dipped Zinc-Coated (Galvanized) Welded, for Fence Structures

1.3 QUALIFICATIONS

A. Installer bonded and licensed in California.
B. Installer shall have a minimum two (2) years experience installing similar fencing.
C. Utilize only AWS certified welders.
D. Electric gate operators to be UL listed.
E. Grounding by an electrician licensed in California.

1.4 DEFINITIONS

A. See ASTM F552.
B. NPS: Nominal pipe size, in inches.
C. Installer or Applicator:
   1. Installer or applicator is the person actually installing or applying the product in the field at the Site.
   2. Installer and applicator are synonymous.

1.5 SUBMITTALS

A. Shop Drawings:
   1. Product technical data including:
      a. Acknowledgement that products submitted meet requirements of standards referenced.

b. Manufacturer's installation instructions.
2. Scaled plan layout showing spacing of components, accessories, fittings, and post anchorage.
3. Mill certificates.
4. Source quality control test results.

PART 2 PRODUCTS

2.1 MANUFACTURERS

A. Subject to compliance with the Contract Documents, the following manufacturers are acceptable:
1. Fence systems:
a. Cyclone.
b. Page-Wilson Corporation (Page Fence Division).
c. Anchor Fence, Inc.
d. Or Approved Equal.

2.2 COMPONENTS

A. Chain Link Fabric:
1. Fabric type:
a. ASTM A392 zinc-coated steel: Coated before weaving, 2.0 OZ/SF.
2. Wire gage: 9.
3. Mesh size: 2 IN.
4. Selvage treatment:
a. Top: Knuckled.
b. Bottom: Knuckled.
B. Concrete: See Section 03002 (Concrete and Control Density Fill).
C. Line Post:
1. ASTM F1083 pipe: Schedule 40, NPS 2.
D. Corner or Terminal Posts:
1. ASTM F1083 pipe: Schedule 40, NPS 2-1/2.
E. Brace and Rails:
1. ASTM F1083 pipe: Schedule 40, 80, NPS 1-1/4.
F. Tension Wire:
1. Bottom of fabric: ASTM A824, galvanized steel, Class 3.
G. Fence Fittings (Post and Line Caps, Rail and Brace Ends, Sleeves-Top Rail, Tie Wires and Clips, Tension and Brace Bands, Tension Bars, Truss Rods): ASTM F626.
H. Swing Gate:
1. ASTM F900.
2. Materials as specified for fence framework and fabric.
3. Hardware:
a. Galvanized per ASTM A153.
b. Hinges to permit 180-degree inward gate opening.
I. Barbed Wire:
1. Three (3) strands.
2. Galvanized steel:
a. ASTM A121.
b. Class 3 zinc coating.

c. Four-point barbs.

J. Aluminum-coated steel:
1. ASTM A121.
2. Aluminum barbs.

2.3 SOURCE QUALITY CONTROL

A. Test related fence construction materials to meet the following standards:
1. Posts and rails:
a. ASTM F1043, Heavy Industrial.

PART 3 EXECUTION

3.1 INSTALLATION

A. Install in accordance with:
1. Manufacturer's instructions.
2. Lines and grades as indicated.
3. In accordance with ASTM F567.

B. Do not start fence installation before final grading is complete and finish elevations are established.

C. Drill holes in firm, undisturbed or compacted soil.

D. Place fence with bottom edge of fabric at maximum clearance above grade, as indicated.
1. Correct minor irregularities in earth to maintain maximum clearance.

E. Space line posts at equal intervals not exceeding 10 FT OC.

F. Provide post braces for each gate, corner, pull and terminal post and first adjacent line post.

G. Install tension bars full height of fabric.

H. Rails: Fit rails with expansion couplings of outside sleeve type.
1. Rails continuous for outside sleeve type for full length of fence.

I. Provide expansion couplings in top rails at not more than 20 FT intervals.

J. Anchor top rails to main posts with appropriate wrought or malleable fittings.

K. Install bracing assemblies at all end and gate posts, as well as side, corner, and pull posts.
1. Locate compression members at mid-height of fabric.
2. Extend diagonal tension members from compression members to bases of posts.
3. Install so that posts are plumb when under correct tension.

L. Pull fabric taut and secure to posts and rails.
1. Secure so that fabric remains in tension after pulling force is released.
2. Secure to posts at not over 15 IN OC, and to rails at not over 24 IN OC, and to tension wire at not over 24 IN OC.
3. Use U-shaped wire conforming to diameter of pipe to which attached, clasping pipe and fabric firmly with ends twisted at least two (2) full turns.
4. Bend ends of wire to minimize hazards to persons or clothing.

M. Install post top at each post.

N. Gates:
1. Construct with fittings or by welding.
2. Provide rigid, weatherproof joints.
3. Ensure right, non-sagging, non-twisting gate.
4. Coat welds with rust preventive paint, color to match pipe.

END OF SECTION

SECTION 02935

HYDROSEEDING

PART 1 GENERAL

1.1 SUMMARY

A. Section Includes:
   1. Hydroseeding.

1.2 REFERENCES

A. USDA Federal Seed Act

1.3 SUBMITTALS

A. Shop Drawings:
   1. Layout drawings:
      a. Scaled site plan (scale 1 IN = 20 FT or equal to scale of Site plan drawing) on reproducible drawing to show:
   2. Product technical data including:
      a. Acknowledgement that products submitted meet requirements of standards referenced.
      b. Manufacturer's installation instructions.
      c. Signed copies of vendor's statement for seed mixture required, stating botanical and common name, place of origin, strain, percentage of purity, percentage of germination, and amount of Pure Live Seed (PLS) per bag.
   3. Certification:
      a. Certify each container of seed delivered will be labeled in accordance with Federal and State Seed Laws and equals or exceeds Specification requirements.
   4. Other documents:
      a. Copies of invoices for fertilizer used on Project showing grade furnished, along with certification of quality and warranty. If Owner determines fertilizer requires sampling and testing to verify quality, testing will be done at Contractor's expense, in accordance with current methods of Association of Official Agricultural Chemists. Upon completion of Project, a final check of total quantities of fertilizer used will be made against total area seeded. If minimum rates of application have not been met, Contractor will be required to distribute additional quantities to make up minimum application specified.

1.4 SEQUENCING AND SCHEDULING

A. Installation Schedule:
   1. Provide schedule showing when hydroseeding is anticipated.
   2. Indicate planting schedules in relation to schedule for finish grading and topsoiling.
   3. Indicate anticipated dates Owner will be required to review installation for initial acceptance and final acceptance.
B. Pre-installation Meeting:
   1. Meet with Owner and other parties as necessary to discuss schedule and methods, unless otherwise indicated by Owner.

PART 2 PRODUCTS

2.1 MATERIALS

A. Hydroseeding Materials:

1. Fertilizer: Fertilizer used in hydroseed application shall have a guaranteed analysis of 16% nitrogen, 20% phosphoric acid, 15% sulphur and 0% soluble potash and shall be in a form that will readily disperse into the hydroseed slurry.
   a. Fertilizer application rate: 500 pounds/acre.
2. Soil Amendment: Planter mix shall be a blend of nitrogen stabilized redwood and fir sawdust, screened loam, and compost chicken manure as produced by Soils Plus or Approved Equal.
3. Mulch: Mulch shall be wood cellulose fiber and shall be of such character that it will disperse uniformly into a slurry when mixed with water. No materials that inhibit growth or seed germination shall be present in the material.
   a. Mulch application rate: 4,000 pounds/acre.
4. Seed Mix: Seed used in hydroseed mix shall be as follows:

Name	Design Percent
California Brome	30
Blue Wild Grass	30
Meadow Barley	30
California Poppy	5
Lupine	5

   a. Seed Mix application rate: 200 pounds/acre.
5. Stabilizing Agent: Stabilizing Agent shall be Exology Control "MBinder" or Albright and Towne Sentinal or Approved Equal. Stabilizing agent shall be plant derived (non-asphaltic).
   a. Stabilizing agent application rate: 75 - 100 pounds/acre.
6. Water: Water for hydro mulching shall be clean potable water added to the slurry mixture in sufficient amount to spread uniformly the required quantity of hydro mulch solids (approximately 3,000 gallons per acre).
7. Equipment: Hydro mulching equipment used for the application of the seed, fertilizer and slurry of prepared wood pulp shall be of the type normally used in such operations and shall be approved by Owner. This equipment shall have a built-in agitation system and operating capacity sufficient to agitate, suspend and homogeneously mix a slurry containing up to 40 pounds of fiber plus a combined total of 70 pounds of fertilizer solids and seeds for each 100 gallons of water. The slurry distribution lines shall be large enough to prevent stoppage. This discharge line shall be equipped with a set of hydraulic spray nozzles which will provide a continuous nonfluctuating discharge and delivery of the slurry in the prescribed quantities uniformly, without misses, waste, or erosion. The slurry tank shall have a minimum capacity of 1,000 gallons and shall be mounted on a traveling unit which may be either self propelled or drawn.

PART 3 EXECUTION

3.1 SOIL PREPARATION

A. General:
   1. Limit preparation to areas which will be planted soon after.

3.2 INSTALLATION

A. Hydroseeding:
   1. The slurry preparation shall take place on the Site. The preparation shall begin by adding water to the tank when the engine is at half throttle. When the water level has reached the height of the agitator shaft, good recirculation shall be established. At this time, the seed shall be added followed by the fertilizer and then the cellulose mulch. The mulch shall only be added to the mixture after the seed and when the tank is at least one-third filled with water. The engine throttle shall be opened to full speed when the tank is half filled with water. All of the mulch shall be added by the time the tank is two-third to three-fourths full. Spraying shall commence immediately when the tank is full.
   2. All areas to receive hydro mulch shall be sprayed with a uniform visible coat using the green color of the mulch as a guide. The slurry shall be applied in a sweeping motion, in an arching stream, so as to fall like rain allowing the fibers to build on each other until the specified amount of materials is applied. The nozzle shall not be pointed at the ground nor shall the pressure be allowed to roll the mulch, forming ridges along the ground. Such areas shall be immediately re-sprayed.
   3. Any slurry mixture which has not been applied to the designated areas within four hours of mixing shall be rejected by Owner and shall be removed from the project at the Contractor's expense.
   4. Surry shall not be sprayed on undesignated areas. Slurry not be allowed to fall onto ground cover or shrub areas nor onto trees that are within the designated areas. Any slurry spilled or sprayed into areas other than those designated to receive spray or onto objects such as trees, posts, fences, poles, vaults, walks, etc. shall be cleaned up to the satisfaction of Owner at Contractor's expense.
   5. Install hydroseed on all disturbed areas including outside slopes of all embankments.

END OF SECTION

DIVISION 3

CONCRETE

SECTION 03002

CONCRETE AND CONTROL DENSITY FILL

PART 1 GENERAL

1.1 SUMMARY

A. Section Includes:
   1. Cast-in-place concrete and grout.
   2. Control Density Fill (CDF).

1.2 REFERENCES

A. ACI 116R	Cement and Concrete Terminology
B. ACI 211.1	Standard Practice for Selecting Proportions for Normal, Heavyweight and Mass Concrete
C. ACI 212.3R	Chemical Admixtures for Concrete
D. ACI 304R	Guide for Measuring, Mixing, Transporting, and Placing Concrete
E. ACI304.2R	Placing Concrete by Pumping Methods
F. ACI 305R	Hot Weather Concreting
G. ACI 306R	Cold Weather Concreting
H. ACI 318	Building Code Requirements for Structural Concrete
I. ACI 347R	Recommended Practice for Concrete Formwork.
J. ASTM A82	Standard Specification Steel Wire, Plain, for Concrete Reinforcement
K. ASTM A185	Standard Specification for Steel Welded Wire Fabric, Plain, for Concrete Reinforcement
L. ASTM A615	Standard Specification for Deformed and Plain Billet-Steel Bars for Concrete Reinforcement (Including Supplementary Requirements S1)
M. ASTM C31	Standard Practice for Making and Curing Concrete Test Specimens in the Field
N. ASTM C33	Standard Specification for Concrete Aggregates
O. ASTM C39	Standard Test Method for Compressive Strength of Cylindrical Concrete Specimens
P. ASTM C94	Standard Specification for Ready-Mixed Concrete
Q. ASTM C138	Standard Method of Test for Unit Weight, Yield, and Air Content (Gravimetric) of Concrete
R. ASTM C143	Standard Test Method for Slump of Hydraulic Cement Concrete
S. ASTM C150	Standard Specification for Portland Cement
T. ASTM C157	Standard Test Method for Length Change of Hardened Hydraulic Cement Mortar and Concrete
U. ASTM C172	Standard Practice for Sampling Freshly Mixed Concrete
V. ASTM C173	Standard Test Method for Air Content of Freshly Mixed Concrete by the Volumetric Method
W. ASTM C231	Standard Test Method for Air Content of Freshly Mixed Concrete by the Pressure Method

X. ASTM C260	Standard Specification for Air Entraining Admixtures for Concrete
Y. ASTM C289	Standard Test Method for Potential Alkali-Silica Reactivity of Aggregates (Chemical Method)
Z. ASTM C309	Standard Specification for Liquid Membrane-Forming Compounds for Curing Concrete
AA.ASTM C494	Standard Specification for Chemical Admixtures for Concrete
BB. ASTM C618	Standard Specification for Coal Fly Ash and Raw or Calcined Natural Pozzolan for Use as a Mineral Admixture in Concrete
CC.ASTM C1315	Standard Specification for Liquid Membrane-Forming Compounds Having Special Properties for Curing and Sealing Concrete
DD.ASTM D994	Standard Specification for Preformed Expansion Joint Filler for Concrete (Bituminous Type)
EE. ASTM D1056	Standard Specification for Flexible Cellular Materials Sponge or Expanded Rubber
FF. ASTM D1751	Standard Specification for Preformed Expansion Joint Filler for Concrete Paving and Structural Construction (Nonextruding and Resilient Bituminous Types)
GG.COE CRD-C572	Polyvinyl Waterstops

1.3 QUALITY CONTROL

A. Concrete Testing Agency.
   1. Contractor to employ and pay for services of a testing laboratory to:
      a. Perform materials evaluation.
      b. Design concrete mixes.
   2. Concrete testing agency to meet requirements of ASTM E329.

B. Do not begin concrete production until proposed concrete mix design has been approved by Owner.
   1. Approval of concrete mix design by Owner does not relieve Contractor of his responsibility to provide concrete that meets the requirements of this Section 03002.

C. Adjust concrete mix designs when material characteristics, job conditions, weather, strength test results or other circumstances warrant.
   1. Do not use revised concrete mixes until submitted to and approved by Owner.

D. Perform structural calculations as required to prove that all portions of the structure in combination with remaining forming and shoring system has sufficient strength to safely support its own weight plus the loads placed thereon.

1.4 QUALIFICATIONS

A. Ready mixed concrete batch plant certified by National Ready Mixed Concrete Association (NRMCA).

B. Formwork, shoring and reshoring for slabs and beams except where cast on ground to be designed by a professional engineer currently registered in the state of California.

1.5 DEFINITIONS

A. Per ACI 116R except as modified herein:
   1. Concrete fill: Non-structural concrete.

2. Concrete Testing Agency: Testing agency employed to perform materials evaluation, design of concrete mixes or testing of concrete placed during construction.
3. Exposed concrete: Exposed to view after construction is complete.
4. Lean concrete: Concrete with low cement content.
5. Nonexposed concrete: Not exposed to view after construction is complete.
6. Required: Required by Contract Documents.
7. Specified strength: Specified compressive strength at 28 Days.
8. Submitted: Submitted to Owner.

1.6 SUBMITTALS

A. Shop Drawings:
1. Concrete mix designs proposed for use. Concrete mix design submittal to include the following information:
   a. Sieve analysis and source of fine and coarse aggregates.
   b. Test for aggregate organic impurities.
   c. Test for deleterious aggregate per ASTM C289.
   d. Proportioning of all materials.
   e. Type of cement with mill certificate for cement.
   f. Type of fly ash with certificate of conformance to specification requirements.
   g. Slump.
   h. Air content.
   i. Brand, type, ASTM designation, and quantity of each admixture proposed for use.
   j. 28-Day cylinder compressive test results of trial mixes per ACI 318 and as indicated herein.
   k. Shrinkage test results.
   l. Standard deviation value for concrete production facility.
2. Manufacturer and type of joint filler, joint sealant, curing agent and chemical floor hardener.
3. Manufacturer and type of bonding and patching mortar and bonding adhesive used at construction joints.
4. Manufacturer and type of nonshrink grout and the cure/seal compound required for the nonshrink grout.
5. Reinforcing steel: Show grade, sizes, number, configuration, spacing, location and all fabrication and placement details.
   a. In sufficient detail to permit installation of reinforcing without having to make reference to Contract Drawings.
   b. Obtain approval of shop drawings by Owner before fabrication.
   c. Mill certificates.
6. Strength test results of in place concrete including slump, air content and concrete temperature.

1.7 DELIVERY, STORAGE, AND HANDLING

A. Storage of Material:
1. Cement:
   a. Store in moistureproof, weathertight enclosures.
   b. Do not use if caked or lumpy.
2. Aggregate:
   a. Store to prevent segregation and contamination with other sizes or foreign materials.
   b. Obtain samples for testing from aggregates at point of batching.

c. Do not use frozen or partially frozen aggregates.
d. Do not use bottom 6 IN of stockpiles in contact with ground.
e. Allow sand to drain until moisture content is uniform prior to use.

3. Admixtures:
   a. Protect from contamination, evaporation, freezing, or damage.
   b. Maintain within temperature range recommended by manufacturer.
   c. Completely mix solutions and suspensions prior to use.
4. Reinforcing steel:
   a. Support and store all rebars above ground.
5. Epoxy Grout:
   a. Each component packaged separately for mixing at Site.

B. Delivery:
1. Concrete:
   a. Prepare a delivery ticket for each load for ready-mixed concrete.
   b. Truck operator shall hand ticket to Owner at the time of delivery.
   c. Ticket to show:
      1) Mix identification mark.
      2) Quantity delivered.
      3) Amount of each material in batch.
      4) Outdoor temp in the shade.
      5) Time at which cement was added.
      6) Numerical sequence of the delivery.
      7) Amount of water added.
2. Reinforcing steel: Ship to Site with attached plastic or metal tags with permanent mark numbers.
   a. Mark numbers to match shop drawing mark number.

PART 2 PRODUCTS

2.1 MANUFACTURERS

A. Subject to compliance with the Contract Documents, the following manufacturers are acceptable:
1. Nonshrink, nonmetallic grout:
   a. Sika "SikaGrout 212."
   b. Gifford Hill "Supreme Grout."
   c. Master Builders "Masterflow 713."
   d. Or Approved Equal.
2. Epoxy grout:
   a. Master Builders "Brutem MPG."
   b. Euclid Chemical Company, "High Strength Grout."
   c. Fosroc, "Conbextra EPHF".
   d. Or Approved Equal.
3. Expansion joint fillers:
   a. Permaglaze Co.
   b. Rubatex Corp.
   c. Williams Products, Inc.
   d. Or Approved Equal.

4. Waterstops, PVC:
   a. Greenstreak Plastic Products, Inc.
   b. W. R. Meadows, Inc.
   c. Burke Company.
   d. Or Approved Equal.
5. Waterstops, preformed strip type:
   a. Acceptable manufacturers:
      1) Hydrotite CJ by Greenstreak Plastics, Inc.
      2) Adeka Ultra Seal USA.
   b. Materials:
      1) Hydrophilic type waterstop manufactured solely for the purpose of preventing water from traveling through construction joints.
      2) Hydrotite type CJ-0725-3K.
      3) Or Approved Equal.
6. Form coating:
   a. Richmond "Rich Cote."
   b. Industrial Lubricants "Nox-Crete Form Coating."
   c. Protex "Pro-Cote."
   d. Or Approved Equal.
7. Prefabricated forms:
   a. Simplex "Industrial Steel Frame Forms."
   b. Symons "Steel Ply."
   c. Universal "Uniform."
   d. Or Approved Equal.
8. Chemical sealer:
   a. L & M Construction Chemicals, Inc.
   b. Euclid Chemical Co.
   c. Dayton Superior.
   d. Or Approved Equal.

2.2 MATERIALS

A. Portland Cement: Conform to ASTM C150 I-II Low Alkali.
B. Fly Ash:
   1. ASTM C618, Class F.
   2. Maximum loss on ignition: 4 percent.
   3. Compatible with other concrete ingredients.
   4. Non-staining.
      a. Hardened concrete containing fly ash to be uniform light gray color.
C. Admixtures:
   1. Air entraining admixtures: ASTM C260.
   2. Water reducing, retarding, and accelerating admixtures:
      a. ASTM C494 Type A through E.
      b. Conform to provisions of ACI 212.3R.
      c. Do not use retarding or accelerating admixtures unless specifically approved in writing by Owner and at no cost to Owner.
      d. Follow manufacturer's instructions.
      e. Use chloride free admixtures only.

3. Maximum total water soluble chloride ion content contributed from all ingredients of concrete including water, aggregates, cementitious materials and admixtures by weight percent of cement:
   a. 0.10 all concrete.
4. Do not use calcium chloride.
5. Pozzolanic admixtures: ASTM C618.
6. Provide admixtures of same type, manufacturer and quantity as used in establishing required concrete proportions in the mix design.

D. Water: Potable, clean, free of oils, acids and organic matter.

E. Aggregates:
1. Normal weight concrete: ASTM C33, except as modified below.
2. Fine aggregate: Clean natural sand.
   a. No manufactured or artificial sand.
3. Coarse aggregate: Crushed rock, natural gravel, or other inert granular material.
   a. Maximum amount of clay or shale particles: 1 percent.
4. Gradation of coarse aggregate:
   a. Lean concrete and concrete topping: Size #7.
   b. All other concrete: Size #57 or #67.

F. Concrete Grout:
1. Nonshrink nonmetallic grout:
   a. Nonmetallic, noncorrosive, nonstaining, premixed with only water to be added.
   b. Grout to produce a positive but controlled expansion.
   c. Mass expansion not to be created by gas liberation.
   d. 28-Day minimum compressive strength of nonshrink grout: 6500 psi.
2. Epoxy grout:
   a. 3-component epoxy resin system.
      1) Two liquid epoxy components.
      2) One inert aggregate filler component.

G. Reinforcing Steel:
1. Reinforcing bars: ASTM A615, Grade 60.
2. Welded wire fabric: ASTM A185.
   a. Minimum yield strength: 60,000 psi.
3. Column spirals: ASTM A82.

H. Forms:
1. Prefabricated or job built.
2. Wood forms:
   a. New 5/8 or 3/4 IN 5-ply structural plywood of concrete form grade.
   b. Built-in-place or prefabricated type panel.
   c. 4 x 8 FT sheets for built-in-place type except where smaller pieces will cover entire area.
   d. When approved by Owner, plywood may be reused.
3. Metal forms:
   a. Metal forms excluding aluminum may be used.
   b. Forms to be tight to prevent leakage, free of rust and straight without dents to provide members of uniform thickness.
4. Chamfer strips: Clear white pine, surface against concrete planed.
5. Form ties: Removable end, permanently embedded body type with cones on outer ends not requiring auxiliary spreaders.

a. Cone diameter: 3/4 IN minimum to 1 IN maximum.
b. Embedded portion 1 IN minimum back from concrete face.
c. If not provided with threaded ends, constructed for breaking off ends without damage to concrete.
d. Provide ties with built-in waterstops at all walls that will be in contact with process liquid during plant operation.

6. Form release: Nonstaining and shall not prevent bonding of future finishes to concrete surface.

I. Waterstops:
1. Plastic: Corp of Engineers Specification CRD-C572.
2. Serrated with center bulb.
3. Thickness: 3/8 IN.
4. Length (general use): 6 IN unless indicated otherwise.
5. Expansion joints:
a. Length: 9 IN.
b. Center bulb: 1 IN OD x 1/2 IN ID.
6. Provide hog rings or grommets spaced at maximum 12 IN OC along the length of the water stop.
7. Provide factory made waterstop fabrications at all changes of direction, intersections and transitions leaving only straight butt splices for the field.

J. Chairs, Runners, Bolsters, Spacers, and Hangers:
1. Stainless steel, epoxy coated, or plastic coated metal.
a. Plastic coated: Rebar support tips in contact with the forms only.

K. Chemical Floor Sealer:
1. Colorless low VOC water-based solution containing acrylic copolymers.
a. ASTM C1315, Class B, minimum 30 percent solids.
2. Similar to L & M Construction Chemicals Inc. Dress & Seal WB 30.

L. Vapor Retarder:
1. Vapor transmission not exceeding 0.1 perm.
2. Tear strength 15 psi.
3. Similar to: Alumiseal "Zero Perm".

M. Membrane Curing Compound: ASTM C309, Type I-D.
1. Resin based, dissipates upon exposure to UV light.
2. Curing compound shall not prevent bonding of any future coverings, coatings or finishes.

N. Expansion Joint Filler:
1. In contact with water or sewage:
a. Closed cell neoprene.
b. ASTM D1056, Class SC (oil resistant and medium swell) of 2 to 5 psi compression deflection (Grade SCE41).
2. Exterior driveways, curbs and sidewalks:
a. Asphalt expansion joint filler.
b. ASTM D994.
3. Other use:
a. Fiber expansion joint filler.
b. ASTM D1751.

2.3 CONCRETE MIXES

A. General:
   1. All concrete to be ready mixed concrete conforming to ASTM C94.
   2. Provide concrete of specified quality capable of being placed without segregation and, when cured, of developing all properties required.

B. Strength:
   1. Provide specified strength and type of concrete for each use in structure(s) as follows:

TYPE	WEIGHT	SPECIFIED STRENGTH *
All Concrete	Normal weight	4000 psi
CDF	Normal Weight	50-150 psi

*Minimum 28-Day compressive strength.

C. Air Entrainment: Provide air entrainment in all concrete resulting in a total air content percent by volume as follows:

MAX AGGREGATE SIZE	TOTAL AIR CONTENT PERCENT
1 IN or 3/4 IN	5 to 7
1/2 IN	5 1/2 to 8

   1. Air content to be measured in accordance with ASTM C231, ASTM C173, or ASTM C138.

D. Slump: 4 IN maximum, 1 IN minimum.
   1. Measured at point of discharge of the concrete into the concrete construction member.
   2. Concrete of lower than minimum slump may be used provided it can be properly placed and consolidated.
   3. Pumped concrete:
      a. Provide additional water at batch plant to allow for slump loss due to pumping.
      b. Provide only enough additional water so that slump of concrete at discharge end of pump hose does not exceed maximum slump specified above.
   4. Determine slump per ASTM C143.
   5. Control density fill slump 6-8 inches.

E. Selection of Proportions:
   1. General - Proportion ingredients to:
      a. Produce proper workability, durability, strength, and other required properties.
      b. Prevent segregation and collection of excessive free water on surface.
   2. Minimum cement contents and maximum water cement ratios for concrete to be as follows:

SPECIFIED STRENGTH	MINIMUM CEMENT, LB/CY			MAXIMUM WATER CEMENT RATIO BY WEIGHT
	MAXIMUM AGGREGATE SIZE, IN			
	1/2	3/4	1	
4000	611	611	611	0.45

3. Sand cement grout:
   a. Three parts sand.
   b. One part Portland cement.
   c. Entrained air: Six percent plus or minus one percent.
   d. Sufficient water for required workability.
   e. Minimum 28-Day compressive strength: 3,000 psi.
4. Pan stair fill:
   a. Coarse aggregate: 100 percent passing a 1/2 IN sieve.
   b. Proportions:
      1) 1 sack cement.
      2) 150 LBS coarse aggregate.
      3) 150 LBS fine aggregate (sand).
   c. Adjust mix to obtain satisfactory finishing.
5. Normal weight concrete: Proportion mixture to provide desired characteristics using one of methods described below:
   a. Method 1 (Trial Mix): Per ACI 318, Chapter 5, except as modified herein.
      1) Air content within range specified above.
      2) Record and report temperature of trial mixes.
      3) Proportion trial mixes per ACI 211.1.
   b. Method 2 (Field Experience): Per ACI 318, Chapter 5, except as modified herein:
      1) Field test records must be acceptable to Owner to use this method.
      2) Test records shall represent materials, proportions and conditions similar to those specified.
6. Required average strength to exceed the specified 28-Day compressive strength by the amount determined or calculated in accordance with the requirements of Paragraph 5.3 of ACI 318 using the standard deviation of the proposed concrete production facility as described in Paragraph 5.3.1 of ACI 318.

F. Allowable Shrinkage: 0.048 percent per ASTM C157.

G. Controlled Density Fill (CDF):
1. Non-segregating, self-containing, free-flowing, and excavatable material resulting in a hardened, dense, non-settling fill.
2. Minimum compressive strength: 50 psi.
3. Maximum compressive strength: 150 psi.
4. Slump: 6 to 8 inches.
5. Mixture:
   a. Portland cement. Conform to ASTM C150.
   b. Fly Ash: Type F.
   c. Aggregates: Conform to ASTM C33.
   d. Water.
   e. Additives: Conform to ASTM C260 and C494.

PART 3 EXECUTION

3.1 FORMING AND PLACING CONCRETE

A. Formwork:
   1. Contractor is responsible for design and erection of formwork.
   2. Construct formwork so that concrete members and structures are of correct size, shape, alignment, elevation and position.
      a. Allowable tolerances: As recommended in ACI 347R.
   3. Provide slabs and beams of minimum indicated depth when sloping foundation base slabs or elevated floor slabs to drains.
      a. For slabs on grade, slope top of subgrade to provide floor slabs of minimum uniform indicated depth.
      b. Do not place floor drains through beams.
   4. Openings: Provide openings in formwork to accommodate work of other trades.
      a. Accurately place and securely support items built into forms.
   5. Chamfer Strips: Place 3/4 IN chamfer strips in forms to produce 3/4 IN wide beveled edges on permanently exposed corners of members.
   6. Clean and adjust forms prior to concrete placement.
   7. Tighten forms to prevent mortar leakage.
   8. Coat form surfaces with form release agents prior to placing reinforcing bars in forms.

B. Reinforcement:
   1. Position, support and secure reinforcement against displacement.
   2. Locate and support with chairs, runners, bolsters, spacers and hangers, as required.
   3. Set wire ties so ends do not touch forms and are directed into concrete, not toward exposed concrete surfaces.
   4. Lap splice lengths: ACI 318 Class B top bar tension splices unless indicated otherwise.
   5. Unless otherwise indicated, provide minimum concrete cover as follows:
      a. Concrete deposited against earth: 3 IN.
      b. Formed surfaces exposed to weather or in contact with earth: 2 IN for reinforcing bars #6 or larger; 1-1/2 IN for reinforcing bars less than #6.
      c. Formed surfaces exposed to or located above any liquid: 2 IN.
      d. Interior surfaces: 1-1/2 IN for beams, girders and columns; 3/4 IN or bar diameter, whichever is greater, for slabs, walls and joists.
   6. Do not weld reinforcing bars.
   7. Welded wire fabric:
      a. Install welded wire fabric in maximum practical sizes.
      b. Splice sides and ends with a splice lap length measured between outermost cross wires of each fabric sheet not less than:
         1) One spacing of cross wires plus 2 IN.
         2) 1.5 x development length.
         3) 6 IN.
      c. Development length: ACI 318 basic development length for the specified fabric yield strength.

C. Construction, Expansion, and Contraction Joints:
   1. Provide at locations indicated.
   2. Locate wall vertical construction joints at 30 FT maximum centers and wall horizontal construction joints at 10 FT maximum centers.

3. Locate construction joints in floor slabs and foundation base slabs so that concrete placements are approximately square and do not exceed 2500 SF.
4. Locate construction joints in columns and walls:
   a. At the underside of beams, girders, haunches, drop panels, column capitals, and at floor panels.
   b. Haunches, drop panels, and column capitals are considered part of the supported floor or roof and shall be placed monolithically therewith.
   c. Column base need not be placed monolithically with the floor below.
5. Locate construction joints in beams and girders:
   a. At the middle of the span, unless a beam intersects a girder at that point.
   b. If the middle of the span is at an intersection of a beam and girder, offset the joint in the girder a distance equal to twice the beam width.
   c. Provide satisfactory means for transferring shear and other forces through the construction joint.
6. Locate construction joints in suspended slabs:
   a. At or near the center of span in flat slab or T-beam construction.
   b. Do not locate a joint between a slab and a concrete beam or girder unless indicated.
7. In pan-formed joists:
   a. At or near span center when perpendicular to the joists.
   b. Centered in the slab, midway between joists, when parallel to the joists.
8. Install construction joints in beams, slabs, and girders perpendicular to the planes of their surfaces.
9. At least 48 HRS shall elapse between placing of adjoining concrete construction.
10. Thoroughly clean and remove all laitance and loose and foreign particles from construction joints.
11. Before new concrete is placed, coat all construction joints with an approved bonding adhesive used and applied in accordance with manufacturer's instructions.

D. Embedments:
1. Set and build in anchorage devices and other embedded items required for other work that is attached to, or supported by concrete.
2. Use setting diagrams, templates and instructions for locating and setting.
3. Secure waterstops in correct position using hog rings or grommets spaced along the length of the waterstop and wire tie to adjacent reinforcing steel.

E. Placing Concrete:
1. Place concrete in compliance with ACI 304R and 304.2R.
2. Place in a continuous operation within planned joints or sections.
3. Begin placement when work of other trades affecting concrete is completed.
4. Place concrete by methods which prevent aggregate segregation.
5. Do not allow concrete to free fall more than 4 FT.
6. Where free fall of concrete will exceed 4 FT, place concrete by means of tremie pipe or chute.

F. Consolidation:
1. Consolidate all concrete using mechanical vibrators supplemented with hand rodding and tamping, so that concrete is worked around reinforcement and embedded items into all parts of forms.

G. Protection:
1. Protect concrete from physical damage or reduced strength due to weather extremes.
2. In cold weather comply with ACI 306R except as modified herein.

a. Do not place concrete on frozen ground or in contact with forms or reinforcing bars coated with frost, ice or snow.
b. Minimum concrete temperature at the time of mixing:

OUTDOOR TEMPERATURE AT PLACEMENT (IN SHADE)	CONCRETE TEMPERATURE AT MIXING
Below 30 DegF	70 DegF
Between 30-45 DegF	60 DegF
Above 45 DegF	50 DegF

c. Do not place heated concrete that is warmer than 80 DegF.
d. If freezing temperatures are expected during curing, maintain the concrete temperature at or above 50 DegF for 7 Days or 70 DegF for 3 Days.
e. Do not allow concrete to cool suddenly.

3. In hot weather comply with ACI 305R except as modified herein.
   a. At air temperature of 90 DegF and above, keep concrete as cool as possible during placement and curing.
   b. Do not allow concrete temperature to exceed 90 DegF at placement.
   c. Prevent plastic shrinkage cracking due to rapid evaporation of moisture.
   d. Do not place concrete when the actual or anticipated evaporation rate equals or exceeds 0.2 LBS/SF/HR as determined from ACI 305R, Figure 2.1.5.

H. Curing:
1. Begin curing concrete as soon as free water has disappeared from exposed surfaces.
2. Cure concrete by use of moisture retaining cover, burlap kept continuously wet or by membrane curing compound.
3. Provide protection as required to prevent damage to concrete and to prevent moisture loss from concrete during curing period.
4. Provide curing for minimum of 7 Days.
5. Form materials left in place may be considered as curing materials for surfaces in contact with the form materials except in periods of hot weather.
6. In hot weather follow curing procedures outlined in ACI 305R.
7. In cold weather follow curing procedures outlined in ACI 306R.
8. If forms are removed before 7 Days have elapsed, finish curing of formed surfaces by one of above methods for the remainder of the curing period.
9. Curing vertical surfaces with a curing compound: Cover vertical surfaces with a minimum of two coats of the curing compound.
   a. Allow the preceding coat to completely dry prior to applying the next coat.
   b. Apply the first coat of curing compound immediately after form removal.
   c. Vertical surface at the time of receiving the first coat shall be damp with no free water on the surface.
   d. A vertical surface is defined as any surface steeper than 1 vertical to 4 horizontal.

I. Form Removal:
1. Remove forms after concrete has hardened sufficiently to resist damage from removal operations or lack of support.
2. Where no reshoring is planned, leave forms and shoring used to support concrete until it has reached its specified 28-Day compressive strength.

3. Where re-shoring is planned, supporting formwork may be removed when concrete has sufficient strength to safely support its own weight and loads placed thereon.
    a. While re-shoring is underway, no superimposed loads shall be permitted on the new construction.
    b. Place reshores as soon as practicable after stripping operations are complete but in no case later than the end of working Day on which stripping occurs.
    c. Tighten reshores to carry their required loads.
    d. Leave reshores in place until concrete being supported has reached its specified 28-Day compressive strength.

3.2 CONCRETE FINISHES

A. Tolerances:
    1. Class A: 1/8 IN in 10 FT.
    2. Class B: 1/4 IN in 10 FT.
B. Surfaces Exposed to View:
    1. Provide a smooth finish for exposed concrete surfaces and surfaces that are:
        a. To be covered with a coating or covering material applied directly to concrete.
        b. Scheduled for grout cleaned finish.
    2. Remove fins and projections, and patch voids, air pockets, and honeycomb areas with cement grout.
    3. Fill tie holes with nonshrink nonmetallic grout.
C. Surfaces Not Exposed to View:
    1. Patch voids, air pockets and honeycomb areas with cement grout.
    2. Fill tie holes with nonshrink nonmetallic grout.
D. Grout Cleaned Finish:
    1. Mix one part Portland cement and 1-1/2 parts fine sand with sufficient bonding agent/water mixture to produce a grout with the consistency of thick paint.
        a. White Portland cement shall be substituted for gray Portland cement to produce a color that matches color of surrounding concrete as determined by trial patch for areas not to be painted.
    2. Wet surface of concrete to prevent absorption of water by grout and uniformly apply grout with brushes or spray gun.
    3. Immediately scrub the surface with a cork float or stone to coat and fill air bubbles and holes.
    4. While grout is still plastic, remove all excess grout by working surface with rubber float, sack or other approved means.
    5. After the surface whitens from drying, rub vigorously with clean burlap.
    6. Keep final finish damp for a minimum of 36 HRS after final rubbing.
E. Troweled Finish:
    1. Float finish surface.
    2. Next power trowel, and finally hand trowel.
    3. Produce a smooth surface which is relatively free of defects with first hand troweling.
    4. Perform additional trowelings by hand after surface has hardened sufficiently.
    5. Final trowel when a ringing sound is produced as trowel is moved over surface.
    6. Thoroughly consolidate surface by hand troweling.
    7. Leave finished surface essentially free of trowel marks, uniform in texture and appearance and plane to a Class A tolerance.

8. On surfaces intended to support floor coverings remove any defects of sufficient magnitude that would show through floor covering by grinding.

F. Broom Finish: Immediately after concrete has received a float finish as specified, give it a transverse scored texture by drawing a broom across surface.

G. Apply chemical floor hardener to permanently exposed interior concrete floor slab surfaces where indicated.
   1. Apply in accordance with manufacturer's instructions.

3.3 GROUT

A. Preparation:
   1. Nonshrinking nonmetallic grout:
      a. Clean concrete surface to receive grout.
      b. Saturate concrete with water for 24 HRS prior to grouting.
   2. Rock anchors:
      a. Clean rock anchors of all loose material.
      b. Orient hook or bends in anchor bars to clear anchor bolts, reinforcements, and other embedments to be installed later.
   3. Epoxy grout: Apply only to clean, dry, sound surface.

B. Application:
   1. Nonshrinking nonmetallic grout:
      a. Mix in a mechanical mixer.
      b. Use no more water than necessary to produce flowable grout.
      c. Place in accordance with manufacturer's instructions.
      d. Completely fill all spaces and cavities below the bottom of baseplates.
      e. Provide forms where baseplates and bedplates do not confine grout.
      f. Where exposed to view, finish grout edges smooth.
      g. Except as indicated, finish edges flush at the baseplate, bedplate, member, or piece of equipment.
      h. Protect against rapid moisture loss by covering with wet rags or polyethylene sheets.
      i. Wet cure grout for 7 Days, minimum.
   2. Rock anchors:
      a. See Item 1 above.
      b. If rodded:
         1) Fill each hole so that it overflows when anchor bar is inserted.
         2) Force anchor bars into place.
      c. If pressure placed, set anchor bar before grouting.
      d. Take special care to avoid any movement of anchors that have been placed.
   3. Epoxy grout:
      a. Mix and place in accordance with manufacturer's instructions.
      b. Completely fill all cavities and spaces around dowels and anchors without voids.
      c. Obtain manufacturer's field technical assistance as required to ensure proper placement.

3.4 FIELD QUALITY CONTROL

A. Owner will employ and pay for services of a concrete testing laboratory to perform testing of concrete placed during construction.
   1. Contractor to cooperate with Owner in obtaining and testing samples.

B. Tests During Construction:
   1. Strength test - procedure:

a. Three cylinders, 6 IN DIA x 12 IN high, will be taken from each sample per ASTM C172 and C31.
b. Cylinders will be tested per ASTM C39:
1) One at 7 Days.
2) Two at 28 Days.

2. Strength test - frequency:
a. Not less than one test each Day concrete placed.
b. Not less than one test for each 50 CY or major fraction thereof placed in one Day.
c. Not less than one test for each type of concrete poured.
d. Not less than one test for each concrete structure exceeding 2 CY volume.

3. Slump test: Per ASTM C143.
a. Determined for each strength test sample.
b. Additional slump tests may be taken.

4. Air content: Per ASTM C231, C173, and C138.
a. Determined for each strength test sample.

5. Temperature: Determined for each strength test sample.

C. Evaluation of Tests:
1. Strength test results: Average of 28-Day strength of two cylinders from each sample.
a. If one cylinder manifests evidence of improper sampling, molding, handling, curing or testings, strength of remaining cylinder will be test result.
b. If both cylinders show any of above defects, test will be discarded.

D. Acceptance of Concrete:
1. Strength level of each type of concrete shall be considered satisfactory if both of the following requirements are met:
a. Average of all sets of three consecutive strength tests equals or exceeds the required specified 28-Day compressive strength.
b. No individual strength test falls below the required specified 28-Day compressive strength by more than 500 psi.

2. If tests fail to indicate satisfactory strength level, perform additional tests and/or corrective measures as directed by Owner.
a. Perform additional tests and/or corrective measures at no additional cost to Owner.

3.5 SCHEDULES

A. Form Types:
1. Surfaces exposed to view:
a. Prefabricated or job-built wood forms.
b. Laid out in a regular and uniform pattern with long dimensions vertical and joints aligned.
c. Produce finished surfaces free from offsets, ridges, waves, and concave or convex areas.
d. Construct forms sufficiently tight to prevent leakage of mortar.

2. Surfaces normally submerged or not normally exposed to view:
a. Wood or steel forms sufficiently tight to prevent leakage of mortar.

3. Other types of forms may be used:
a. For surfaces not restricted to plywood or lined forms.
b. As backing for form lining.

B. Grout:
1. Nonshrinking nonmetallic grout: General use.

2. Epoxy grout:
    a. Grouting of dowels and anchor bolts into existing concrete.
    b. Other uses as indicated.
3. Sand cement grout: Keyways of precast members.

C. Concrete:
1. Precast concrete: As indicated.
2. General use concrete: All other locations.

D. Concrete Finishes:
1. Grout cleaned finish: As indicated.
2. Slab finishes:
    a. Use following finishes as applicable, unless otherwise indicated:
        1) Troweled finish: Interior floor slabs, exposed roof slabs and base slabs of structures, equipment bases, and column bases.
        2) Broom finish: Sidewalks.

END OF SECTION

DIVISION 5

METALS

SECTION 05500

METAL FABRICATIONS

PART 1 GENERAL

1.1 SUMMARY

A. Section Includes:
   1. Custom fabricated metal items and manufactured units.
   2. All temporary bracing not indicated on Drawings.
   3. Systems and components, including but not limited to:
      a. Landings.
      b. Ladders.

B. Related Sections:
   1. Section 03002 (Concrete and Control Density Fill).
   2. Section 09905 (Painting and Protective Coatings).

1.2 REFERENCES

A. ASTM A6	Standard Specification for General Requirements for Rolled Structural Steel Bars, Plates, Shapes, and Sheet Piling
B. ASTM A36	Standard Specification for Carbon Structural Steel
C. ASTM A47	Standard Specification for Ferritic Malleable Iron Castings
D. ASTM A48	Standard Specification for Gray Iron Castings
E. ASTM A53	Standard Specification for Pipe, Steel, Black and Hot-Dipped, Zinc-Coated, Welded and Seamless
F. ASTM A123	Standard Specification for Zinc (Hot-Dip Galvanized) Coatings on Iron and Steel Products
G. ASTM A153	Standard Specification for Zinc Coating (Hot-Dip) on Iron and Steel Hardware
H. ASTM A197	Standard Specification for Cupola Malleable Iron
I. ASTM A269	Standard Specification for Seamless and Welded Austenitic Stainless Steel Tubing for General Service
J. ASTM A276	Standard Specification for Stainless Steel Bars and Shapes
K. ASTM A307	Standard Specification for Carbon Steel Bolts and Studs, 60,000 PSI Tensile Strength
L. ASTM A312	Standard Specification for Seamless, Welded, and Heavily Cold Worked Austenitic Stainless Steel Pipes
M. ASTM A325	Standard Specification for Structural Bolts, Steel, Heat Treated, 120/105 ksi Minimum Tensile Strength
N. ASTM A496	Standard Specification for Steel Wire, Deformed, for Concrete Reinforcement
O. ASTM A500	Standard Specification for Cold-Formed Welded and Seamless Carbon Steel Structural Tubing in Rounds and Shapes
P. ASTM A501	Standard Specification for Hot-Formed Welded and Seamless Carbon Steel Structural Tubing
Q. ASTM A536	Standard Specification for Ductile Iron Castings

R. ASTM A554	Standard Specification for Welded Stainless Steel Mechanical Tubing
S. ASTM A666	Standard Specification for Annealed or Cold-Worked Austenitic Stainless Steel Sheet, Strip, Plate, and Flat Bar
T. ASTM A668	Standard Specification for Steel Forgings, Carbon and Alloy, for General Industrial Use
U. ASTM A780	Standard Practice for Repair of Damaged and Uncoated Areas of Hot-Dip Galvanized Coatings
V. ASTM A992	Standard Specification for Steel for Structural Shapes
W. ASTM B209	Standard Specification for Aluminum and Aluminum-Alloy Sheet and Plate
X. ASTM B221	Standard Specification for Aluminum and Aluminum-Alloy Extruded Bars, Rods, Wire, Profiles, and Tubes
Y. ASTM B308	Standard Specification for Aluminum-Alloy 6061-T6 Standard Structural Profiles
Z. ASTM B429	Standard Specification for Aluminum-Alloy Extruded Structural Pipe and Tube
AA.ASTM B632	Standard Specification for Aluminum-Alloy Rolled Tread Plate
BB. ASTM F467	Standard Specification for Nonferrous Nuts for General Use
CC.ASTM F468	Standard Specification for Nonferrous Bolts, Hex Cap Screws, and Studs for General Use
DD.ASTM F1554	Standard Specification for Anchor Bolts, Steel, 36, 55, and 105-ksi Yield Strength
EE. AWS A5.1	Standard Specification for Carbon Steel Electrodes for Shielded Metal Arc Welding
FF. AWS D1.1	Structural Welding Code Steel
GG.AWS D1.2	Structural Welding Code Aluminum
HH.NAAMM MBG 531	Metal Bar Grating Manual

1.3 QUALIFICATIONS

A. Qualify welding procedures and welding operators in accordance with AWS.
B. Fabricator shall have minimum of 10 years experience in fabrication of metal items specified.
C. Engineer for contractor-designed systems and components: Professional civil or structural engineer licensed in the State of California.

1.4 DEFINITIONS

A. Installer or Applicator:
   1. Installer or applicator is the person actually installing or applying the product in the field at the Project site.
   2. Installer and applicator are synonymous.
B. Hardware: As defined in ASTM A153.
C. Galvanizing: Hot-dip galvanizing per ASTM A123 or ASTM A153 with minimum coating of 2.0 OZ of zinc per square foot of metal (average of specimens) unless noted otherwise or dictated by standard.
D. Building Code: California Building Code and associated standards, 2010 Edition including all amendments.
E. OSHA Standards: Occupational Safety and Health Standards, OSHA 29 CFR 1910.

1.5 SUBMITTALS

A. Shop Drawings:
   1. Fabrication and/or layout drawings and details:
      a. Submit drawings for all fabrications and assemblies.
         1) Include erection drawings, plans, sections, details and connection details.
      b. Identify materials of construction, shop coatings and third party accessories.
   2. Product technical data including:
      a. Acknowledgement that products submitted meet requirements of standards referenced.
      b. Manufacturer's installation instructions.
      c. Provide manufacturer's standard allowable load tables for the following:
         1) Grating and checkered plate.
         2) Expansion anchor bolts.
         3) Adhesive anchor bolts.
         4) Castings, trench covers and accessories.
   3. Contractor designed systems and components, including but not limited to, anchors, stairs, landings and ladders:
      a. Certification that manufactured units meet all design loads specified.
      b. Shop Drawings and engineering design calculations:
         1) Indicate design live loads and lateral loads.
         2) Summary reactions of structural supporting Contractor designed system.
         3) Sealed by a professional civil or structural engineer licensed in the State of California.
B. Certifications:
   1. Certification of welders and welding processes.
      a. Indicate compliance with AWS.

1.6 DELIVERY, STORAGE, AND HANDLING

A. Deliver and handle fabrications to avoid damage.
B. Store above ground on skids or other supports to keep items free of dirt and other foreign debris and to protect against corrosion.

PART 2 PRODUCTS

2.1 MANUFACTURERS

A. Subject to compliance with the Contract Documents, the following manufacturers are acceptable:
   1. Abrasive stair nosings (embedded in concrete stairs):
      a. American Safety Tread.
      b. Balco.
      c. Or Approved Equal.
   2. Headed studs and deformed bar anchors:
      a. Nelson Stud Welding Div., TRW Inc.
      b. Stud Welding Products, Inc.
      c. Or Approved Equal.
   3. Expansion anchor bolts:
      a. Approved by Building Code for ACI 318 Appendix D installations in cracked concrete.

b. Expansion anchors not to be used without written approval from Engineer.
c. Hilti Inc.
d. Simpson Strongtie.

4. Epoxy adhesive anchor bolts:
   a. Approved by Building Code for ACI 318 Appendix D installations in cracked concrete.
   b. Hilti Inc.
   c. Simpson Strongtie.
5. Castings, trench covers and accessories:
   a. Neenah Foundry Co.
   b. Deeter Foundry Co.
   c. Barry Craft Construction Casting Co.
   d. McKinley Iron Works.
   e. Or Approved Equal.
6. Aluminum ladders:
   a. Any manufacturer capable of meeting the requirements of this Section 05500.
7. Galvanizing repair paint:
   a. Clearco Products Co., Inc.
   b. ZRC Products.
   c. Or Approved Equal.

2.2 MATERIALS

A. Steel:
   1. Structural:
      a. W-shapes and WT-shapes: ASTM A992, Grade 50.
      b. All other plates and rolled sections: ASTM A36.
   2. Pipe: ASTM A53, Types E or S, Grade B or ASTM A501.
   3. Structural tubing:
      a. ASTM A500, Grade B (46 ksi minimum yield).
   4. Bolts, nuts and washers, high strength:
      a. ASTM A325.
      b. Provide two (2) washers with all bolts.
   5. Bolts and nuts:
      a. ASTM A307, Grade A.
   6. Welding electrodes: AWS D1.1, E70 Series.
   7. Steel forgings: ASTM A668.

B. Iron:
   1. Ductile iron: ASTM A536.
   2. Gray cast iron: ASTM A48 (minimum 30,000 psi tensile strength).
   3. Malleable iron: ASTM A47, ASTM A197.

C. Stainless Steel:
   1. Minimum yield strength of 30,000 psi and minimum tensile strength of 75,000 psi.
      a. Bars, shapes: ASTM A276, Type 304.
      b. Tubing and pipe: ASTM A269, ASTM A312 or ASTM A554, Type 304 or 316.
      c. Strip, plate and flat bars: ASTM A666, Type 304 or 316, Grade A.
      d. Bolts and nuts: ASTM F593, Type 303, 304 or 316.
   2. Minimum yield strength of 25,000 psi and minimum tensile strength of 70,000 psi.
      a. Strip, plate and flat bar for welded connections, ASTM A666, Type 304L or 316L.

3. Welding electrodes: In accordance with AWS for metal alloy being welded.

D. Aluminum:
1. Alloy 6061-T6, 32,000 psi tensile yield strength minimum.
   a. ASTM B221 and ASTM B308 for shapes including beams, channels, angles, tees and zees.
   b. Weir plates, baffles and deflector plates, ASTM B209.
2. Alloy 6063-T5 or T6, 15,000 psi tensile yield strength minimum.
   a. ASTM B221 and ASTM B429 for bars, rods, wires, pipes and tubes.
3. ASTM B26 for castings.
4. ASTM F468, alloy 2024 T4 for bolts.
5. ASTM F467, alloy 2024 T4 for nuts.
6. Electrodes for welding aluminum: AWS D1.2, filler alloy 4043 or 5356.

E. Washers: Same material and alloy as found in accompanying bolts and nuts.

F. Embedded Anchor Bolts:
1. Building anchor bolts:
   a. ASTM F1554, Grade 55 with weldability supplement S1 or ASTM A36 for threaded rods galvanized.
   b. ASTM A307, Grade A for headed bolts galvanized.
2. All other anchor bolts: Type 304 or 316 stainless steel with matching nut and washer.

G. Expansion Anchor Bolts and Adhesive Anchor Bolts:
1. Stainless steel, Type 304, 314 or 316.
2. Provide minimum edge distance cover and spacing as recommended by manufacturer, or as indicated, whichever is larger.
   a. Minimum embedment as recommended by manufacturer or eight (8) diameters of bolt, whichever is larger.
   b. Notify Owner if required depth of embedment cannot be achieved at a particular anchor bolt location.
   c. Follow manufacturer's recommendations for installation and torque.

H. Headed Studs: ASTM A108 with a minimum yield strength of 50,000 psi and a minimum tensile strength of 60,000 psi.

I. Deformed Bar Anchors: ASTM A496 with a minimum yield strength of 70,000 psi and a minimum tensile strength of 80,000 psi.

J. Iron and Steel Hardware: Galvanized in accordance with ASTM A153 when required to be galvanized.

K. Galvanizing Repair Paint:
1. High zinc dust content paint for regalvanizing welds and abrasions.
2. ASTM A780.
3. Zinc content: Minimum 92 percent in dry film.
4. ZRC "ZRC Cold Galvanizing" or Clearco "High Performance Zinc Spray."

L. Dissimilar Materials Protection: See Section 09905 (Painting and Protective Coatings).

2.3 MANUFACTURED UNITS

A. Bollards:
1. 6 IN DIA extra strength steel pipe, ASTM A53.
   a. Prime painted.
2. Minimum 48 IN projection above ground.
3. Minimum 36 IN embedment in concrete.

B. Aluminum Checkered Plate:
   1. Conform to ASTM B632.
      a. Diamond pattern: Use one (1) pattern throughout Project.
      b. Material: Type 6061-T6.
   2. Design live load:
      a. 100 psf, uniform load.
      b. 300 LBS concentrated load on 4 IN square area.
      c. All components to be adequate for the uniform load or the concentrated load, whichever requires the stronger component.
      d. Maximum deflection: 1/300 of span under a superimposed live load of 50 psf.
   3. Reinforce as necessary with aluminum angles.
   4. Plate sections:
      a. Maximum 3 FT wide.
      b. Minimum 1/4 IN thick.
      c. Maximum 100 LBS per section if required to be removable.
   5. Provide joints at center of all openings unless shown otherwise.
      a. Reinforce joints and openings with additional angles to provide required load carrying capacity.
   6. Unless shown otherwise, frame for openings with aluminum checkered plate cover:
      a. Aluminum support angles:
         1) 3 x 2 x 1/4 IN minimum size with long leg vertical.
         2) 5/8 IN DIA adhesive anchor bolts spaced at maximum of 24 IN OC along each side with not less than two (2) anchor bolts per side.
      b. Aluminum concrete insert seats:
         1) 2 x 2 x 1/4 IN minimum size.
         2) Auto-welded studs or strap anchors at 18 IN OC with not less than two (2) studs or anchored per side.
      c. Drill and tap frame to receive 3/8 IN DIA aluminum cap screws at not more than 24 IN OC with not less than two (2) screws per side.

C. Aluminum Grating:
   1. NAAMM MBG 531.
   2. Bearing bars: Rectangular, 1-1/2 x 3/16 IN at 1-3/16 IN OC spacing OR I-bar, 1-1/2 IN deep with minimum 1/16 IN thick bar and minimum 1/4 IN flange width at 1-3/16 IN OC spacing.
   3. Cross bars:
      a. Welded, swaged or pressure locked to bearing bars:
      b. Maximum 4 IN/OC spacing.
   4. Top edges of bars: Grooved or serrated.
   5. Removable grating sections: Not wider than 3 FT and not more than 100 LBS.
   6. Standard mill finish.
   7. Ends and perimeter edges: Banded.
   8. Openings through grating: Reinforced to provide required load carrying capacity and banded with 4 IN high toe plate.
   9. Provide joints at openings between individual grating sections.
   10. Clips and bolts: Stainless steel.
   11. Seat angles: Aluminum.

2.4 FABRICATION

A. Verify field conditions and dimensions prior to fabrication.
B. Form materials to shapes indicated with straight lines, true angles, and smooth curves.
   1. Grind smooth all rough welds and sharp edges.
      a. Round all corners to approximately 1/32 - 1/16 IN nominal radius.
C. Provide drilled or punched holes with smooth edges.
   1. Punch or drill for field connections and for attachment of work by other trades.
D. Weld Permanent Shop Connections:
   1. Welds to be continuous fillet type unless indicated otherwise.
   2. Full penetration butt weld at bends in stair stringers and ladder side rails.
   3. Weld structural steel in accordance with AWS D1.1 using Series E70 electrodes conforming to AWS A5.1.
   4. Weld aluminum in accordance with AWS D1.2.
   5. All headed studs to be welded using automatically timed stud welding equipment.
   6. Grind smooth welds that will be exposed.
E. Conceal fastenings where practicable.
F. Fabricate work in shop in as large assemblies as is practicable.
G. Tolerances:
   1. Rolling:
      a. ASTM A6.
      b. When material received from the mill does not satisfy ASTM A6 tolerances for camber, profile, flatness, or sweep, the Contractor is permitted to perform corrective work by the use of controlled heating and mechanical straightening, subject to the limitations of the AISC Specifications.
   2. Fabrication tolerance:
      a. Member length:
         1) Both ends finished for contact bearing: 1/32 IN.
         2) Framed members:
            (a) 30 FT or less: 1/16 IN.
            (b) Over 30 FT: 1/8 IN.
      b. Member straightness:
         1) Compression members: 1/1000 of axial length between points laterally supported.
         2) Non-compression members: ASTM A6 tolerance for wide flange shapes.
      c. Specified member camber (except compression members):
         1) 50 FT or less: Minus 0/plus 1/2 IN.
         2) Over 50 FT: Minus 0/plus 1/2 IN (plus 1/8 IN per 10 FT over 50 FT).
         3) Members received from mill with 75 percent of specified camber require no further cambering.
         4) Beams/trusses without specified camber shall be fabricated so after erection, camber is upward.
         5) Camber shall be measured in fabrication shop in unstressed condition.
      d. At bolted splices, depth deviation shall be taken up by filler plates.
         1) At welded joints, adjust weld profile to conform to variation in depth.
         2) Slope weld surface per AWS requirements.
      e. Finished members shall be free from twists, bends and open joints.
         1) Sharp kinks, bends and deviation from above tolerances are cause for rejection of material.

H. Fabricate grating, checkered plate, ladders and accessories using aluminum unless otherwise indicated.
   1. Finish:
      a. Aluminum: Mill finished unless scheduled or otherwise specified or, if approved by Owner, finished in manufacturer's standard.
      b. Coat surfaces in contact with dissimilar materials.
         1) See Section 09905 (Painting and Protective Coatings).
   2. See Section 09905 (Painting and Protective Coatings) for preparation and painting of ferrous metals and other surfaces.
I. Maximum tolerance for difference in depth between checkered plate or grating depth and seat or support angle depth: 1/8 IN.
J. Distance between edge of grating or checkered plate and face of embedded seat angle or face of wall or other structural member shall be 1/4 IN.
   1. Tolerance per NAAMM MBG 531.

2.5 SOURCE QUALITY CONTROL

A. Surface Preparation:
   1. Refer to Section 09905 (Painting and Protective Coatings) for surface preparation requirements.
B. Shop Applied Paint Coating Application:
   1. Refer to Section 09905 (Painting and Protective Coatings) for painting requirements.

PART 3 EXECUTION

3.1 PREPARATION

A. Provide items to be built into other construction in time to allow their installation.
   1. If such items are not provided in time for installation, cut in and install.
B. Prior to installation, inspect and verify condition of substrate.
C. Correct surface defects or conditions which may interfere with or prevent a satisfactory installation.
   1. Field welding aluminum is not permitted unless approved in writing by Owner.

3.2 INSTALLATION

A. Set metal work level, true to line, plumb.
   1. Shim and grout as necessary.
B. Bolt Field Connections: Where practicable, conceal fastenings.
C. Grind welds smooth where field welding is required.
D. Field cutting grating or checkered plate to correct fabrication errors is not acceptable.
   1. Replace entire section.
E. Remove all burrs and radius all sharp edges and corners of miscellaneous plates, angles, framing system elements, etc.
F. Unless noted or specified otherwise:
   1. Connect steel members to steel members with 3/4 IN DIA ASTM A325 high strength bolts.
   2. Connect aluminum to aluminum with 3/4 IN DIA aluminum bolts.
   3. Connect aluminum to structural steel using 3/4 IN DIA stainless steel bolts.
      a. Provide dissimilar metals protection.

4. Connect aluminum and steel members to concrete and masonry using stainless steel expansion anchor bolts or adhesive anchor bolts.
    a. Provide dissimilar materials protection.
5. Provide washers for all bolted connections.
6. Where exposed, bolts shall extend a maximum of 3/4 IN and a minimum of 1/2 IN above the top nut.
    a. If bolts are cut off to required maximum height, threads must be dressed to allow nuts to be removed without damage to the bolt or the nuts.

G. Install and tighten ASTM A325 high-strength bolts in accordance with the AISC Manual of Steel Construction - Allowable Stress Design (ASD).
1. Provide hardened washers for all ASTM A325 bolts.
    a. Provide the hardened washer under the element (nut or bolt head) turned in tightening.

H. After bolts are tightened, upset threads of ASTM A307 unfinished bolts or anchor bolts to prevent nuts from backing off.

I. Secure metal to wood with lag screws of adequate size with appropriate washers.

J. Do not field splice fabricated items unless said items exceed standard shipping length or change of direction requires splicing.
1. Provide full penetration welded splices where continuity is required.

K. Provide each fabricated item complete with attachment devices as indicated or required to install.

L. Anchor such that Work will not be distorted nor fasteners overstressed from expansion and contraction.

M. Set beam and column base plates accurately on nonshrink grout as indicated.
1. See Section 03002 (Concrete and Control Density Fill) for non-shrink grout.
2. Set and anchor each base plate to proper line and elevation.
    a. Use metal wedges, shims, or setting nuts for leveling and plumbing columns and beams.
        1) Wedges, shims and setting nuts to be of same metal as base plate they support.
        2) Tighten nuts on anchor bolts.
    b. Fill space between bearing surface and bottom of base plate with nonshrink grout.
        1) Fill space until voids are completely filled and base plates are fully bedded on wedges, shims, and grout.
    c. Do not remove wedges or shims.
        1) Where wedges or shims protrude, cut off flush with edge of base plate.
    d. Fill sleeves around anchor bolts solid with non-shrink grout.

N. Tie anchor bolts in position to embedded reinforcing steel using wire.
1. Tack welding prohibited.
    a. Coat bolt threads and nuts with heavy coat of clean grease.
2. Anchor bolt location tolerance:
    a. 1/16 IN.
    b. Provide steel templates for all column anchor bolts.

O. Install bollards in concrete as detailed.
1. Fill pipe with concrete and round off at top.

P. Provide abrasive stair nosings in each tread and landing of all concrete stairs and at each concrete stair landing having metal stair structure attaching to the concrete landing.
1. Center stair nosings in stair width.
2. Coordinate nosings with railing vertical posts.

a. Maintain 2 IN clear between end of nosing and edge of railing base plate.

Q. Accurately locate and place frames for openings before casting into floor slab so top of plate is flush with surface of finished floor.
   1. Keep screw holes clean and ready to receive screws.

R. Attach grating to end and intermediate supports with grating saddle clips and bolts.
   1. Maximum spacing: 2 FT OC with minimum of two (2) per side.
   2. Attach individual units of aluminum grating together with clips at 2 FT OC maximum with a minimum of two (2) clips per side.

S. Coat aluminum surfaces in contact with dissimilar materials in accordance with Section 09905(Painting and Protecting Coatings).

T. Repair damaged galvanized surfaces in accordance with ASTM A780.
   1. Prepare damaged surfaces by abrasive blasting or power sanding.
   2. Apply galvanizing repair paint to minimum 6 mils DFT in accordance with manufacturer's instructions.

3.3 CLEANING

A. After erection, installation or application, clean all miscellaneous metal fabrication surfaces of all dirt, weld slag and other foreign matter.

B. Provide surface acceptable to receive field applied paint coatings specified in Section 09905 (Painting and Protecting Coatings).

END OF SECTION

SECTION 05522

ALUMINUM RAILINGS

PART 1 GENERAL

1.1 SUMMARY

A. Section Includes:
   1. Aluminum guardrail.

1.2 REFERENCES

A.	ASME Section IX	Qualification Standard for Welding and Brazing Procedures, Welders, Brazers, and Welding and Brazing Operators
B.	ASTM B108	Standard Specification for Aluminum-Alloy Permanent Mold Castings
C.	ASTM B209	Standard Specification for Aluminum and Aluminum-Alloy Sheet and Plate
D.	ASTM B221	Standard Specification for Aluminum and Aluminum-Alloy Extruded Bars, Rods, Wire, Shapes and Tubes
E.	ASTM B247	Standard Specification for Aluminum and Aluminum-Alloy Die Forgings, Hand Forgings, and Rolled Ring Forgings
F.	ASTM B429	Standard Specification for Aluminum-Alloy Extruded Structural Pipe and Tube
G.	AWS C5.5	Recommended Practices for Gas Tungsten Arc Welding
H.	AWS D1.2	Structural Welding Code Aluminum
I.	NAAMM AMP 521	Pipe Railing Systems Manual

1.3 QUALIFICATIONS

A. Qualify welding procedures and welding operators in accordance with AWS and ASME Section IX.

1.4 DEFINITIONS

A. Guardrail: A system of building components located near the open sides of elevated walking surfaces for the purpose of minimizing the possibility of an accidental fall from the walking surface to the lower level.
B. Railing: A generic term referring to guardrail, handrail and/or stair rails.
C. Building Code: California Building Code and associated standards, 2010 Edition including all amendments.
D. OSHA Standards: Occupational Safety and Health Standards, OSHA 29 CFR 1910.

1.5 SUBMITTALS

A. Shop Drawings:
   1. Fabrication and/or layout drawings:
      a. Drawings showing profile, location, sections and fabrication details including all welding information of each railing.
      b. Type and details of anchorage.
      c. Location and type of expansion joints.
      d. Materials of construction, shop coatings and all third-party accessories.

2. Product technical data including:
   a. Acknowledgement that products submitted meet requirements of standards referenced.
   b. Manufacturer's installation details.
3. Certification that railings have been designed and fabricated to meet the loading requirements specified.
4. Calculations for all proposed deviations from the Specification.
   a. Calculations shall be performed, sealed, signed and dated by a registered professional structural engineer licensed in the State of California.
   b. Calculations shall be specific to this Project and shall include all assumptions, references and design interpretations used to achieve the results obtained by the Owner's Representative.
   c. Reduction in load criteria is not acceptable as reason for deviation from sizes indicated in the Section 05522.

B. Miscellaneous Submittals:
1. Certification of welders and welding procedures indicating compliance with AWS requirements.

1.6 DELIVERY, STORAGE AND HANDLING

A. Deliver and handle railings to preclude damage.
B. Store railings on skids, keep free of dirt and other foreign matter which will damage railings or finish and protect against corrosion.

1.7 WARRANTY

A. Provide PVDF coating manufacturer's standard 10 year warranty against finish, fading, chipping, cracking and peeling.
1. Repair of finish shall be done using same material, application method and color to match surrounding railings.

PART 2 PRODUCTS

2.1 MANUFACTURERS

A. Subject to compliance with the Contract Documents, the following manufacturers are acceptable:
1. Welded railing systems:
   a. Any manufacturer meeting this Section 05522.

2.2 MATERIALS

A. Alloy 6061-T6, 32,000 psi tensile yield strength minimum.
1. ASTM B209 for sheets and plates.
2. ASTM B221 and ASTM B308 for shapes - beams, channels, angles, tees, and zees.
3. ASTM B247 for forgings.

B. Alloy 6063-T5 or T6, 15,000 psi tensile yield strength minimum.
1. ASTM B221 and ASTM B429 for bars, rods, wires, pipes and tubes.

C. Cast Fittings: Aluminum, ASTM B108.
D. Shims: Aluminum of same alloy as component being shimmed.
E. Fasteners: See Section 05500 (Metal Fabrications).
F. Expansion and Adhesive Anchors: See Section 05500 (Metal Fabrications).

G. Electrodes for Welding:
   1. Aluminum: AWS D1.2.
   2. Filler alloy 5356 or 4043.

2.3 FABRICATION

A. General:
   1. Verify field conditions and dimensions prior to fabrication.
   2. For fabrication of items which will be exposed to view, use only materials which are smooth and free of surface blemishes including pitting, seam marks, roller marks, rolled trade names and roughness.
      a. Remove blemishes by grinding and buffing or by welding and grinding, prior to cleaning, treating and application of surface finishes.
   3. Form exposed work with smooth, short radius bends, accurate angles and straight edges.
      a. Ease exposed edges to a radius of approximately 1/32 IN.
      b. Form bent-metal corners to smallest radius possible without causing grain separation or otherwise impairing work.
      c. Drill or punch holes with smooth edges.
   4. Form exposed connections with flush, smooth, hairline joints, using stainless steel or aluminum splice locks to splice sections together or by welding.
      a. Ease the edges of top rail splices and expansion joints and remove all burrs left from cutting.
   5. Provide for anchorage of type indicated on Drawings or as required by field conditions.
      a. Drill or punch holes with smooth edges.
   6. Design railings and anchorage system in accordance with NAAMM AMP 521 to resist loading as required by Building Code.
   7. Custom fabricate railings to dimensions and profiles indicated.
      a. Fabricate handrail mounted to wall or to guardrail vertical posts using minimum 1-1/4 IN nominal diameter Schedule 40 pipe.
      b. Fabricate all guardrail top rails using minimum 2 IN nominal diameter Schedule 40 pipe.
      c. Fabricate all guardrail vertical posts using minimum 2 IN nominal diameter Schedule 40 pipe.
         1) Guardrail vertical posts that are to be side-bracket mounted to a vertical concrete surface or metal structure shall use Alloy 6063-T6.
      d. All intermediate rails shall be fabricated using minimum 1-1/2 IN nominal diameter Schedule 40 pipe.
         1) Where details are not indicated, set horizontal rails and vertical pickets to requirements of the Building Code or OSHA Standards, whichever requires the more restrictive design.
      e. Space vertical posts as required by loading requirements but not more than 4 FT on center.
      f. Space handrail brackets as required by loading requirements but not more than 4 FT on center.
      g. Base plate for vertical guardrail posts mounted to top of concrete surface:
         1) 3/8 x 6 x 6 IN square plate.
         2) Predrilled to accept four (4) anchors.
         3) Provide a 2 IN DIA x 8 IN long solid aluminum rod welded to the base plate.

4) Fit the vertical post over the solid rod and weld the post to the base plate.

h. Base plate for vertical guardrail post mounted to flange of metal structure:
1) 3/8 x 3 x 8 IN plate.
2) Predrilled to accept two (2) fasteners.
3) Provide a 2 IN DIA x 8 IN long solid aluminum rod welded to the base plate.
4) Fit the vertical post over the solid rod and weld the post to the base plate.

i. Mounting bracket for vertical guardrail post mounted to vertical concrete surface or web of metal structural member:
1) Pair of 3/8 IN angles or bent plates.
2) Predrilled to accept two (2) fasteners each.
3) Weld angles or bent plates to vertical posts.

j. Provide 3/8 IN x 4 IN flat bar toeboards or 1/4 IN minimum thickness x 4 IN high extruded toeboard with stiffener ribs on back side at all elevated walkways, platforms and stair landings, and where indicated on the Drawings or required by OSHA Standards.

8. Fit exposed ends of guardrails and handrails with solid terminations.
a. Return ends of handrail to wall, but do not attach to wall.
b. Where guardrail terminates at a wall, provide a vertical post located 4 IN off the wall to center of post.

9. Preassemble items in shop to greatest extent possible to minimize field splicing and assembly of units at project site.

B. Finish: Mill.

C. Railing Fabrication:
1. All railings are to be welded systems.
2. Use wire welding for all joints.
3. All welding to be continuous in accordance with AWS C5.5 and AWS D1.2.
a. All welded railing joints shall have full penetration welds unless noted otherwise.
4. All exposed welds to be ground smooth and flush to match and blend with adjoining surfaces.
a. NAAMM AMP 521, Type 2.
5. No ragged edges, surface defects, or undercutting of adjoining surfaces will be accepted.
6. Finishing joints with filler is not acceptable.
7. Provide flush weld fittings using locking weld connectors or coped drive-on connectors.

D. Install weeps to drain water from hollow sections of railing at exterior and high humidity conditions.
1. Drill 1/4 IN weep hole in railings closed at bottom:
a. 1 IN above walkway surface at bottom of posts set in concrete.
b. 1 IN above solid aluminum rod at posts having base plate.
c. At low point of intermediate rails.
d. Do not drill weep holes:
1) In bottom of base plate.

E. Expansion Joints:
1. Joints to be designed to allow expansion and contraction of railing and still meet design loads required.
a. Top rail splices and expansion joints shall be located within 8 IN of post or other support.
b. Where railings span expansion joints; provide a railing expansion joint in the span crossing the expansion joint.

2. Provide expansion joints in any continuous run exceeding 20 FT in length.
   a. Space expansion joints at not more than 40 FT on center.
3. Provide minimum 0.10 IN of expansion joint for each 20 FT length of top rail for each 25 DegF differential between installation temperature and maximum design temperature.
   a. Maximum expansion joint width at time of installation shall not exceed 3/8 IN.
      1) Provide additional expansion joints as required to limit expansion joint width.
4. Provide slip-joint with internal sleeve.
   a. Extend slip joint min 2 IN beyond joint at maximum design width.
   b. Fasten internal sleeve securely to one side
      1) Provide allen-head set screw located in bottom of rail.
      2) Rivets or exposed screw heads are not acceptable.

PART 3 EXECUTION

3.1 PREPARATION

A. Prior to installation, inspect and verify condition of substrate.
B. Correct surface defects or conditions which may interfere with or prevent a satisfactory installation.
   1. Field welding aluminum is not permitted unless approved in writing by the Owner's Representative.

3.2 INSTALLATION

A. Install handrails and guardrails to meet loading requirements of the Building Code.
B. Install products in accordance with manufacturer's instructions.
C. Set work accurately in location, alignment and elevation; plumb, level and true.
   1. Measure from established lines and items which are to be built into concrete, masonry or similar construction.
D. Align railings prior to securing in place to assure proper matching at butting and expansion joints and correct alignment throughout their length.
   1. Provide shims as required.
E. Install proper sized expansion joints based on temperature at time of installation and differential coefficient of expansion of materials in all railings as recommended by manufacturer.
   1. Lubricate expansion joint splice bar for smooth movement of railing sections.
F. Provide removable railing sections where indicated on Drawings.
G. Attach handrails to walls or guardrail with brackets designed for condition:
   1. Provide brackets which provide a minimum 1-1/2 IN clearance between handrail and nearest obstruction.
      a. Handrails shall not project more than 4-1/2 IN into required stairway width.
   2. Anchor handrail brackets to concrete or masonry walls with 1/2 IN stainless steel adhesive anchors with stainless steel hex head bolts.
H. Anchor railings to concrete with minimum 1/2 IN stainless steel adhesive anchors with stainless steel bolts, nuts and washers unless noted otherwise in the Contract Documents.
   1. Where exposed, bolts shall extend minimum 1/2 IN and maximum 3/4 IN above the top nut.
      a. If bolts are cut off to required height, threads must be dressed to allow nuts to be removed without damage to the bolt or the nut.

b. Bevel the top of the bolt after cutting to provide a smooth surface.

I. Anchor railings to metal structure with minimum 3/4 IN stainless steel bolts, nuts and washers.

J. Install toeboards to fit tight to the walking surface.
   1. Notch toeboards at base plates or other obstructions.
   2. Bottom of toeboard shall not exceed 1/4 IN above walking surface.

K. Coat aluminum in contact with dissimilar metal or concrete in accordance with Section 09905 (Painting and Protective Coatings).

L. Provide railings as required for stair construction identified in Section 05500 (Metal Fabrications).

END OF SECTION

DIVISION 7

THERMAL AND MOISTURE PROTECTION

SECTION 07900

JOINT SEALANTS

PART 1 GENERAL

1.1 SUMMARY

A. Section Includes:
   1. Sealant work.
B. Work included consists of but is not necessarily limited to:
   1. Sealing all joints which will permit penetration of dust, air or moisture, unless sealing work is specifically required under other sections.
      a. Work may include the following:
         1) Wall joints.
         2) Isolation joints.
         3) Concrete construction, control and expansion joints, exterior and interior.
         4) Joints at penetrations of walls, floors and decks by piping and other services and equipment.
         5) Sealing of plumbing fixtures to floor or wall.
         6) Sealing around piping, duct or conduit penetrations through roof, floors, interior and exterior walls.
         7) Other joints where calking, sealant, expanding foam sealant or compressible sealant is indicated.

1.2 REFERENCES

A.	ACI 302.1R	Guide for Concrete Floor and Slab Construction
B.	ASTM C920	Standard Specification for Elastomeric Joint Sealants
C.	ASTM C1521	Standard Practice for Evaluating Adhesion of Installed Weatherproofing Sealant Joints
D.	NSF	National Sanitation Foundation International

1.3 DEFINITIONS

A. "Caulk(ing)," "calk(ing)," and "sealant": Joint sealant work.
B. Installer or Applicator:
   1. Installer or applicator is the person actually installing or applying the product in the field at the Project site.
   2. Installer and applicator are synonymous.
C. Finish sealant: Sealant material per this specification applied over face of compressible sealant or expanding foam sealant specified, to provide a finished, colored sealant joint.
D. Defect(ive): Failure of watertightness or airtightness.

1.4 SUBMITTALS

A. Product Data:
   1. Acknowledgement that products submitted meet requirements of standards referenced.
   2. Manufacturer's installation instructions.
   3. Manufacturer's recommendations for joint cleaner, primer, backer rod, tooling and bond breaker.
B. Warranty.

C. Certification from sealant manufacturer stating product being used is recommended for and is best suited for joint in which it is being applied.
D. Certification of applicator qualification.
E. Samples:
   1. Cured sample of each color for Engineer's color selection.
   2. Color chart not acceptable.
F. Test Results:
   1. Provide adhesion test results for each sealant sample providing adhesion results compared to adhesion requirements.
   2. Manufacturer's authorized factory representative recommended remedial measure for all failing tests.

1.5 DELIVERY, STORAGE, AND HANDLING

A. Deliver material in manufacturer's original unopened containers with labels intact: Labels shall indicate contents and expiration date on material.

1.6 WARRANTY

A. Material and Labor Warranty:
   1. Sealant work free of defects for a period of three (3) years from date of final acceptance.
   2. Remove any defective work or materials and replace with new work and materials.
   3. Warranty signed jointly by Applicator and sealant manufacturer.

1.7 QUALIFICATIONS

A. Sealant applicator shall have minimum five (5) years experience using products specified on projects with similar scope.

PART 2 PRODUCTS

2.1 MANUFACTURERS

A. Subject to compliance with the Contract Documents, the following manufacturers are acceptable:
   1. Polyurethane sealants:
      a. Pecora.
      b. Sika Chemical Corp.
      c. Sonneborn - Rexnord.
      d. Tremco.
      e. Or Approved Equal.
   2. Silicone sealants:
      a. General Electric.
      b. Dow Corning Corp.
      c. Tremco.
      d. Or Approved Equal.
   3. Compressible sealant:
      a. Polytite Manufacturing Corporation.
      b. Emseal.
      c. Norton.
      d. Sandell.
      e. Or Approved Equal.

4. Polysulfide rubber sealant:
   a. Pecora.
   b. Sonneborn.
   c. Morton Polymer Systems.
   d. Or Approved Equal.
5. Expanding foam sealant:
   a. Macklanburg Duncan.
   b. Convenience Products.
   c. FAI International, Inc.
   d. Power Fasteners.
   e. Or Approved Equal.
6. Polyurea joint filler:
   a. Dayton Superior Specialty Chemical Corporation.
   b. Euclid Chemical Co.
   c. L & M Construction Chemicals, Inc.
   d. Sonneborn.
   e. Or Approved Equal.
7. Backer rod, compressible filler, primer, joint cleaners, bond breaker: As recommended by sealant manufacturer.

2.2 MATERIALS

A. Sealants - General:
   1. Provide colors matching materials being sealed.
   2. Where compound is not exposed to view in finished work, provide manufacturer's color which has best performance.
   3. Nonsagging sealant for vertical and overhead horizontal joints.
   4. Sealants for horizontal joints: Self-leveling pedestrian/traffic grade.
B. Silicone Sealant:
   1. One (1) component.
   2. Meet ASTM C920, Type S, Grade NS, Class 25, Use NT, G, A, O.
      a. General Electric: Silpruf, Silglaze II.
      b. General Electric: Sanitary 1700 sealant for sealing around plumbing fixtures.
      c. Dow Corning: 786 for sealing around plumbing fixtures.
      d. Dow Corning: 790, 795.
      e. Tremco: Spectrem 1, Spectrem 3, Tremsil 600.
   3. Mildew resistant for sealing around plumbing fixtures.
C. Compressible Sealant:
   1. Size so that width of material is twice joint width.
   2. Foamed polyurethane strip saturated with polymerized polybutylene waterproofing coated on front face with nonreactive release agent that will act as bond breaker for applied sealant.
      a. Polytite Manufacturing Corp. "Polytite-B."
   3. Fire rated where required.
D. Joint Cleaner, Primer, Bond Breaker: As recommended by sealant manufacturer.
E. Sealant Backer Rod and/or Compressible Filler:
   1. Closed cell polyethylene, polyethylene jacketed polyurethane foam, or other flexible, nonabsorbent, nonbituminous material recommended by sealant manufacturer to:
      a. Control joint depth.

b. Break bond of sealant at bottom of joint.
c. Provide proper shape of sealant bead.
d. Serve as expansion joint filler.

F. Adhesive, Compressible Sealant: As recommended by sealant manufacturer.
G. Expanding Foam Sealant:
1. One (1) or two (2) component fire rated moisture cured expanding urethane.
2. Shall not contain formaldehyde.
3. Density: Minimum 1.5 pcf.
4. Minimum 70 percent closed cell content.
5. R-value minimum 5.0/IN.
6. Flame spread: Less than 25.
7. Smoke developed: Less than 25.

H. Polysulfide Rubber Sealant:
1. One (1) or two (2) component.
2. Meet ASTM C920.
a. Pecora Synthacalk GC2+.
b. Sonneborn - Sonolastic - two-part polysulfide sealant.
c. Morton Polymer Systems - Thiokol Sealants.

I. Polyurea Joint Filler:
1. Two (2) component, semi-rigid material for filling control, sawcut and construction joints in interior concrete floors.
a. Dayton Superior Specialty Chemical Corp. "Joint Fill, Joint Seal, Joint Saver II" as required for condition and recommended by manufacturer.
b. Euclid Chemical Co. "EUCO QWIK" joint.
c. L & M Construction Chemicals, Inc. "Joint Tite 750".
d. Sonneborn "TF-100" control joint filler.
2. Comply with ACI 302.1R performance recommendations regarding control and construction joints.
3. Color: Gray.

PART 3 EXECUTION

3.1 PREPARATION

A. Before use of any sealant, investigate its compatibility with joint surfaces, fillers and other materials in joint system.
B. Use only compatible materials.
C. Where required by manufacturer, prime joint surfaces.
1. Limit application to surfaces to receive calking.
2. Mask off adjacent surfaces.

D. Provide joint depth for joints receiving polyurea joint filler in accordance with manufacturer's recommendations.

3.2 INSTALLATION

A. Install products in accordance with manufacturer's instructions and UL requirements.
B. Clean all joints.
C. Make all joints water and airtight.

D. Make depth of sealing compounds, except expanding foam and polyurea sealant, not more than one-half width of joint, but in no case less than 1/4 IN nor more than 1/2 IN unless recommended otherwise by the manufacturer.
E. Provide correctly sized backer rod, compressible filler or compressible sealant in all joints to depth recommended by manufacturer:
   1. Take care to not puncture backer rod and compressible filler.
   2. Provide joint backer rod as recommended by the manufacturer for polyurea joint filler.
F. Apply bond breaker where required.
G. Tool sealants using sufficient pressure to fill all voids.
H. Upon completion, leave calking with smooth, even, neat finish.
I. Where piping, conduit, ductwork, etc., penetrate wall, seal each side of wall opening.
J. Install compressible sealant to position at indicated depth.
   1. Take care to avoid contamination of sides of joint.
   2. Protect side walls of joint (to depth of finish sealant).
   3. Install with adhesive faces in contact with joint sides.
   4. Install finish sealant where indicated.
K. Install expanding foam sealant to minimum 4 IN depth or thickness of wall being penetrated if less than 4 IN or as indicated on Drawings.
   1. Provide adequate fire rated backing material as required.
   2. Hold material back from exposed face of wall as required to provide backer rod and finish sealant.
      a. Allow expanding foam sealant to completely cure prior to installing backer rod and finish sealant.
   3. Material shall be minimum of 70 DegF prior to and during installation.
   4. Trim off excess material flush with surface of the wall if not providing finished sealant.

3.3 FIELD QUALITY CONTROL

A. Adhesion Testing:
   1. Perform adhesion tests in accordance with ASTM C1521 per the following criteria:
      a. Water bearing structures: One (1) test per every 1000 LF of joint sealed.
      b. Exterior precast concrete wall panels: One (1) test per every 2000 LF of joint sealed.
      c. Chemical containment areas: One (1) test per every 1000 LF of joint sealed.
      d. Building expansion joints: One (1) test per every 500 LF of joint sealed.
      e. All other type of joints except butt glazing joints: One (1) test per every 3000 LF of joint sealed.
      f. Manufacturer's authorized factory representative shall recommend, in writing, remedial measures for all failing tests.

3.4 SCHEDULE

A. Furnish sealant as indicated for the following areas:
   1. Exterior areas: Silicone.
   2. Interior wet areas: Silicone.
   3. Interior wet, corrosive areas: Polysulfide.
   4. Interior nonwet, corrosive areas: Silicone.
   5. Interior nonwet, noncorrosive areas: Silicone.
   6. Compressible sealant: Where indicated.
   7. Sealant which will be subject to prolonged contact with or submersion in water (except wastewater and sewage):
      a. Polysulfide or polyurethane: NSF approved for use in potable water tanks.

8. Penetrations exterior wall above grade:
   a. For non-corrosive areas, provide expanding urethane foam, with polyurethane finish sealant.
   b. For corrosive areas, provide expanding urethane foam, bond breaker and polysulfide finish sealant on corrosive side with polyurethane finish sealant on non-corrosive side.
9. Sealant exposed to or having the potential of being exposed to concentrated chlorine gas or chlorine liquid: Polysulfide.
10. Sealant which will be immersed in wastewater or sewage: Polysulfide.
11. Interior concrete floor control joints or sawed joints: Polyurea joint filler.
12. Sealing around plumbing fixtures: Silicone.
13. Plastic laminate casework, plastic laminate countertops and solid surface materials: Silicone.

END OF SECTION

DIVISION 8

DOORS AND WINDOWS

SECTION 08305

ACCESS DOORS

PART 1 GENERAL

1.1 SUMMARY

A. Section Includes:
   1. Floor doors.

1.2 REFERENCES

A. ASTM A653	Standard Specification for Steel Sheet, Zinc-Coated (Galvanized) or Zinc-Iron Alloy-Coated (Galvannealed) by the Hot-Dip Process
B. ASTM A666	Standard Specification for Annealed or Cold-Worked Austenitic Stainless Steel Sheet, Strip, Plate, and Flat Bar

1.3 DEFINITIONS

A. Heavy Duty: Will support live load of 300 psf.

1.4 SUBMITTALS

A. Product Data:
   1. Acknowledgement that products submitted meet requirements of standards referenced.
   2. Manufacturer's installation instructions.

PART 2 PRODUCTS

2.1 MANUFACTURERS

A. Subject to compliance with the Contract Documents, the following manufacturers are acceptable:
   1. Heavy-duty floor doors:
      a. Bilco Company.
      b. Babcock Davis Associates.
      c. Dur-Red Products.
      d. Halliday Products.
      e. US Fabrication.
      f. Or Equal.

2.2 MANUFACTURED UNITS

A. All access doors shall be provided by the same manufacturer when possible.
B. Floor Doors (Heavy Duty):
   1. Frame: 1/4 IN mill finish aluminum channel.
   2. Bituminous coated when in contact with concrete.
   3. Cover: 1/4 IN mill finished diamond plate aluminum.
   4. All hardware: Stainless steel.
   5. Grip handle: Vinyl.
   6. Fabricate frame with anchor flange around perimeter and 1-1/2 IN DIA drainage coupling.
   7. Reinforce cover with aluminum stiffeners.

8. Fabricate doors to open 90 degrees with assistance of spring operators and automatically lock into open position.
9. Furnish with slam lock and removable key handle.
10. Size(s): Refer to Drawings.
11. Bilco Type "J" or "JD."

2.3 ACCESSORIES

A. Load Rating Plates:
   1. Minimum 18 GA Type 316 stainless steel, ASTM A666.
   2. Engraved with maximum design live load allowed for unit on which it will be mounted.
   3. Load shall be displayed in English units as well as metric units.
   4. Size as required for text as needed.
   5. Text:
      a. Font: Helvetica Narrow, all caps.
      b. Size: 1/4 IN height.
      c. Depth of engraving: 3 mils.
   6. Finish:
      a. Text:
         1) Black epoxy baked on paint.
         2) Plate to have finish conductive to paint application.
      b. Entire plate shall be coated with baked on clear coat on front and back side.
   7. Attach to top of all floor, access doors using stainless steel screws in location determined by manufacturer.
      a. Provide a neoprene gasket under the plate to separate the stainless steel from the aluminum cover or frame.

PART 3 EXECUTION

3.1 INSTALLATION

A. Install products in accordance with manufacturer's instructions.

END OF SECTION

DIVISION 9

FINISHES

SECTION 09905

PAINTING AND PROTECTIVE COATINGS

PART 1 GENERAL

1.1 SUMMARY

A. Section Includes:
   1. Painting and protective coatings.
   2. Minimum surface preparation requirements.

1.2 REFERENCES

A.	ANSI A250.10	Test Procedure and Acceptance Criteria For Prime Painted Steel Surfaces for Steel Doors
B.	ANSI Z535.1	Safety Color Code
C.	ASTM A780	Practice for Repair of Damaged and Uncoated Areas of Hot-Dip Galvanized Coatings
D.	ASTM D4258	Practice for Surface Cleaning Concrete for Coating
E.	ASTM D4259	Practice for Abrading Concrete
F.	ASTM D4261	Practice for Surface Cleaning Concrete Unit Masonry for Coating
G.	ASTM D4262	Test Method for pH of Chemically Cleaned or Etched Concrete Surfaces
H.	ASTM D4263	Test Method for Indicating Moisture in Concrete by the Plastic Sheet Method
I.	ASTM E84	Test Method for Surface Burning Characteristics of Building Materials
J.	NBS	Certified Coating Thickness Calibration Standards
K.	NFPA 101	Life Safety Code
L.	NSF 61	Drinking Water System Components - Health Effects
M.	SSPC PA-2	Measurement of Dry Paint Thickness with Magnetic Gages
N.	SSPC SP-1	Solvent Cleaning
O.	SSPC SP-6	Commercial Blast Cleaning
P.	SSPC SP-7	Brush-off Blast Cleaning
Q.	SSPC SP-10	Near-White Blast Cleaning

1.3 DEFINITIONS

A. Installer or Applicator: Installer or applicator is the person actually installing or applying the product in the field at the Site.
   1. Installer and applicator are synonymous.
B. Approved Factory Finish: Finish on a product in compliance with the finish specified in the section where the product is specified.
C. Corrosive Environment: Immersion in, or not more than 6 IN above, or subject to frequent condensation, spillage or splash of a corrosive material such as water, wastewater, or chemical solution; or chronic exposure to corrosive, caustic or acidic agent, chemicals, chemical fumes, chemical mixture, or solutions with pH range of 5 - 9.
D. Highly Corrosive Environment: Immersion in, or not more than 6 IN above, or subject to frequent condensation, spillage or splash of a corrosive material such as water, wastewater,

or chemical solution; or chronic exposure to corrosive, caustic or acidic agent, chemicals, chemical fumes, chemical mixture, or solutions with pH range below 5 or above 9.

E. Exposed Exterior Surface: Surface which is exposed to weather but not necessarily exposed to view as well as surface exposed to view.

F. Paint: Includes fillers, primers, sealers, emulsions, oils, alkyds, latex, enamels, thinners, stains, epoxies, vinyls, chlorinated rubbers, urethanes, shellacs, varnishes, and any other applied coating specified within this Section.

G. Surface Hidden from View: Surfaces such as those within pipe chases, and between top side of ceilings (including drop-in tile ceilings) and underside of floor or roof structure above.

1.4 SUBMITTALS

A. Manufacturer's statement regarding Applicator instruction on product use.

B. Contractor and applicator experience qualifications.

C. Manufacturer's recommendation for universal barrier coat.

D. Shop Drawings:

1. Product technical data including:
   a. Acknowledgement that products submitted meet requirements of standards referenced.
   b. Manufacturer's application instructions.
   c. Manufacturer's surface preparation instructions.
   d. If products being used are manufactured by Company other than listed in this Section 09905, provide complete individual data sheet comparison of proposed products with specified products including application procedure, coverage rates and verification that product is designed for intended use.
   e. Contractor's written plan of action for containing airborne particles created by blasting operation and location of disposal of spent contaminated blasting media.
   f. Coating manufacturer's recommendation on abrasive blasting.

E. Samples:

1. Manufacturer's full line of colors for Owner color selection.
2. After initial color selection by Owner provide two 3 x 5 IN samples of each color selected.

F. Miscellaneous Submittals:

1. Approval of application equipment.
2. Applicator’s daily record:
   a. Submit daily record at end of each week in which painting Work is performed.

1.5 DELIVERY, STORAGE, AND HANDLING

A. Deliver in original containers, labeled as follows:

1. Name or type number of material.
2. Manufacturer's name and item stock number.
3. Contents, by volume, of major constituents.
4. Warning labels.
5. VOC content.

1.6 QUALIFICATIONS

A. Coating manufacturer's authorized representative shall provide written statement attesting that Applicator has been instructed on proper preparation, mixing and application procedures for coatings specified.

B. Contractor and applicators shall have minimum of 10 years experience in application of similar products on similar project. Provide references for minimum of three different projects completed in last 5 years with similar scope of work. Include name and address of project, size of project in value (painting) and contact person.

1.7 MISCELLANEOUS

A. Furnish paint through one manufacturer unless noted otherwise.
B. Coating used in all corridors and stairways shall meet requirements of NFPA 101 and ASTM E84.
C. Deviation from specified mil thickness or product type is not allowed without written authorization of Owner.
D. Material may not be thinned unless approved, in writing, by paint manufacturer's authorized representative.

PART 2 PRODUCTS

2.1 MANUFACTURERS

A. Subject to compliance with the Contract Documents, the following manufacturers are acceptable:
   1. Tnemec.
   2. Ameron Protective Coatings Div.
   3. ICI Devoe.
   4. Valspar Corp.
   5. Carboline Protective Coatings.
   6. Sherwin Williams.
   7. Dampney Company, Inc.
   8. Or Approved Equal.

2.2 MATERIALS

A. All materials used must contain not more than 2.8 LBS/GAL VOC.
B. For unspecified materials such as thinner, provide manufacturer's recommended products.
C. Paint Systems - General:
   1. P=prime coat. F1, F2 . . . Fn = first finish coat,
      second finish coat . . … . nth finish coat, color as selected by Owner.
   2. If two finish coats of same material are required, Contractor may, at its option and by written approval from paint manufacturer, apply one coat equal to mil thickness of two coats specified.
D. Products specified in Paint Systems are manufactured by Tnemec. Equivalent products from approved manufactures are also acceptable.
E. Paint Systems:
   1. System #1 - Polyamidoamine Epoxy Primer with Polyamidoamine Epoxy or Aliphatic Acrylic Polyurethane Enamel Finish Coat(s).
      a. Prime coat:
         1) P1=1 coat, 3 mils, Series N69 Epoxoline (Polyamidoamine Epoxy), VOC=2.11
      b. Finish coat(s):
         1) Interior:
            (a) F1=1 coat, 3 mils, Series N69 Epoxoline (Polyamidoamine Epoxy)
            (b) F2=1 coat, 3 mils, Series N69 Epoxoline (Polyamidoamine Epoxy)

2) Exterior:
   (a) F1=1 coat, 3 mils, Series N69 Epoxoline (Polyamidoamine Epoxy)
   (b) F2=1 coat, 2.5 mils, Series 1074 Endura-Shield (Aliphatic Acrylic Polyurethane Enamel), VOC=1.81

2. System #2 - NOT USED.
3. System #3 - Polyamidoamine Epoxy Primer with Polyamidoamine Epoxy or Aliphatic Acrylic Polyurethane Enamel Top Coat(s).
   a. Prime coat:
      1) P1=1 coat, 5 mils, Series N69 Epoxoline (Polyamidoamine Epoxy), VOC=2.11
   b. Finish coat(s):
      1) Interior:
         (a) F1=1 coat, 5 mils, Series N69 Epoxoline (Polyamidoamine Epoxy)
      2) Exterior:
         (a) F1=1 coat, 2.5 mils, Series 1074 Endura-Shield (Aliphatic Acrylic Polyurethane Enamel), VOC=2.80
4. System #4 - Zinc-rich Urethane Primer with Polyamidoamine Epoxy or Aliphatic Acrylic Polyurethane Enamel Top Coat(s).
   a. Prime coat:
      1) P1=1 coat, 2.5 mils, Series 90-97 Tneme-Zinc (Zinc-Rich Urethane), VOC=2.67
   b. Finish coat(s):
      1) Interior:
         (a) F1=1 coat, 3 mils, Series N69 Epoxoline (Polyamidoamine Epoxy), VOC=2.11
      2) Exterior:
         (a) F1=1 coat, 2.5 mils, Series 1074 Endura-Shield (Aliphatic Acrylic Polyurethane Enamel), VOC=2.45
5. System #5 - Polyamide Epoxy Primer with Polyamidoamine Epoxy or Aliphatic Acrylic Polyurethane Enamel Top Coat(s).
   a. Prime coat:
      1) P1=1 coat, 2.0 mils, Series N27 F.C. Typoxy (Polyamide Enamel), VOC=2.49
   b. Finish coat(s):
      1) Interior:
         (a) F1=1 coat, 2.5 mils, Series N69 Epoxoline (Polyamidoamine Epoxy), VOC=2.11
      2) Exterior:
         (a) F1=1 coat, 2.0 mils, Series 1074 Endura-Shield (Aliphatic Acrylic Polyurethane Enamel), VOC=2.45
         (b) F1=1 coat, 2.0 mils, Series 1075 Endura-Shield (Aliphatic Acrylic Polyurethane Enamel), VOC=1.82
6. System #6 - NOT USED.
7. System #7 - NOT USED.
8. System #8 - NOT USED.
9. System #9 - NOT USED.
10. System #10 - NOT USED.
11. System #11 - Zinc-Rich Aromatic Urethane Primer.
    a. Prime coat:
       1) P1=1 coat, 3.0 mils, 90-97 Tneme-Zinc (Zinc-Rich Urethane), VOC=2.67
12. System #12 - NOT USED.
13. System #13 - NOT USED.

14. System #14 - NOT USED.
15. System #15 - NOT USED.
16. System #16 - NOT USED.
17. System #17 - NOT USED.
18. System #18 - NOT USED.
19. System #19 - Polyamidoamine Epoxy Coating.
    a. Prime coat:
        1) P1=1 coat, 5 mils, Series N69 Epoxoline (Polyamidoamine Epoxy), VOC=2.11
20. System #20 - NOT USED.
21. System #21 - NOT USED.
22. System #22 - NOT USED.
23. System #23 - NOT USED.
24. System #24 - NOT USED.
25. System #25 - NOT USED.
26. System #26 - NOT USED.
27. System #27 - NOT USED.
28. System #28 - NOT USED.
29. System #29 - NOT USED.
30. System #30 - NOT USED.
31. System #31 - NOT USED.
32. System #32 - NOT USED.

PART 3 EXECUTION

3.1 ITEMS TO BE PAINTED

A. Exposed Exterior Surfaces including:
   1. Piping, valves, pumps, strainer, fittings, and hydrants.
   2. Conduit, device boxes, junction boxes and covers, pull boxes and covers, and supports when attached to a surface required to be painted.
   3. Miscellaneous ferrous metal surfaces.
B. Surfaces in Areas Not Considered Finished:
   1. Paint following surfaces in areas not considered as finished area:
      a. Piping, valves, pumps, strainer, fittings, and hydrants.
      b. Miscellaneous ferrous metal surfaces.
C. New and/or Existing Equipment:
   1. Paint new and/or existing equipment, except:
      a. Where noted in this Section 09905.
      b. Where specified elsewhere in the Contract Documents.

3.2 ITEMS NOT TO BE PAINTED

A. General: Do not paint items listed in Article 3.2 unless specifically noted in the Contract Documents to be painted.
B. Items with Approved Factory Finish.
C. Surfaces hidden from view except when in a corrosive or highly corrosive area, including:
   1. When not in a corrosive or highly corrosive area:
      a. Piping.
      b. Conduit.
      c. Note: Manufacturer's standard coatings, if any, may remain.

D. Other Items:
   1. Stainless steel surfaces except:
      a. Piping.
      b. Banding as required to identify piping.
   2. Aluminum surfaces except:
      a. Where specifically shown in the Contract Documents.
      b. Where in contact with concrete.
      c. Where in contact with dissimilar metals.
   3. Fiberglass surfaces except:
      a. Fiberglass piping.
      b. Piping supports.
   4. Interior of pipe and conduits.
   5. Moving parts of mechanical and electrical units where painting would interfere with the operation of the unit.
   6. Code labels and equipment identification and rating plates.
   7. Structural steel or steel deck required to be fireproofed.
   8. Steel deck.
   9. Contact surfaces of friction-type connections.
   10. Galvanized steel items.

3.3 SCHEDULE OF ITEMS TO BE PAINTED AND PAINTING SYSTEMS

	PAINTING SYSTEM NUMBER
A. Miscellaneous Ferrous Metals:	1
1. Not for coating products with approved factory finishes.	
B. Ferrous Metals:	5
1. For products with approved factory finishes.	
2. Pumps.	
3. Strainers.	
C. Galvanized Metals:	
1. Field touch-up where top coat is required.	4
a. Prime paint only the damaged area.	
2. Assembled galvanized steel items.	3
3. Field touch-up of galvanized surfaces not requiring a finish top coat.	11
a. Paint only damaged areas.	
D. Electrical Conduit:	
1. Galvanized.	3
2. PVC coated.	3
E. Pipe, Valves, and Fittings:	
1. Steel, cast-iron, and uncoated ductile iron.	1
2. PVC.	3
F. Aluminum buried in concrete and between dissimilar metals which are not below liquid level.	19

3.4 PREPARATION

A. General:
   1. Prepare surfaces to be painted in accordance with coating manufacturer's instructions and this Section 09905, unless noted otherwise in the Specification.
   2. Remove all dust, grease, oil, compounds, dirt and other foreign matter which would prevent bonding of coating to surface.

B. Protection:
   1. Protect surrounding surfaces not to be coated.
   2. Remove and protect hardware, accessories, plates, fixtures, finished work, and similar items; or provide ample in-place protection.

C. Prepare and Paint Before Assembly: Where component is subject to corrosive or highly corrosive environment, prepare and paint, before assembly, all surfaces which may be subject to environment which are inaccessible after assembly.

D. Ferrous Metal:
   1. Prepare ductile iron pipe in accordance with pipe manufacturer's recommendations and applicable AWWA standards.
   2. Complete fabrication, welding or burning before beginning surface preparation.
      a. Chip or grind off flux, spatter, slag or other laminations left from welding.
      b. Remove mill scale.
      c. Grind smooth rough welds and other sharp projections.
   3. Solvent clean in accordance with SSPC SP-1 all surfaces scheduled to receive additional SSPC surface preparation.
   4. Restore surface of field welds and adjacent areas to original surface preparation.

E. Galvanized Metal:
   1. Solvent clean in accordance with SSPC SP-1 followed by abrasive brush blast in accordance with SSPC SP-7 to provide 1 mil profile.

F. Preparation by Abrasive Blasting:
   1. All abrasive-blasted ferrous metal surfaces shall be inspected immediately prior to application of paint coatings.
      a. Inspection shall be performed to determine cleanliness and profile depth of blasted surfaces and to certify that surface has been prepared in accordance with this Section 09905.
   2. Schedule the abrasive blasting operation so blasted surfaces will not be wet after blasting and before painting.
   3. Perform additional blasting and cleaning as required to achieve surface preparation required. Prior to painting, reblast surfaces allowed to set overnight or surfaces that show rust bloom.
      a. Surfaces allowed to set overnight or surfaces which show rust bloom prior to painting shall be reinspected prior to paint application.
   4. Profile depth of blasted surface: Not less than 1 mil or greater than 2 mils unless required otherwise by coating manufacturer.
   5. Provide compressed air for blasting that is free of water and oil. Provide accessible separators and traps.
   6. Confine blast abrasives to area being blasted.
      a. Provide shields of polyethylene sheeting or other such barriers to confine blast material.
      b. Plug pipes, holes, or openings before blasting and keep plugged until blast operation is complete and residue is removed.

7. Protect nameplates, valve stems, rotating equipment, motors and other items that may be damaged from blasting.
8. Reblast surfaces not meeting requirements of this Section 09905.
9. Abrasive blasting media may be recovered, cleaned and reused providing Contractor submits, for Owner review, a comprehensive recovery plan outlining all procedures and equipment proposed in reclamation process.
10. Properly dispose of blasting material contaminated with debris from blasting operation not scheduled to be reused.

3.5 APPLICATION

A. General:
1. Thin, mix and apply coatings by brush, roller, or spray in accordance with manufacturer's installation instructions.
   a. Application equipment must be inspected and approved in writing by coating manufacturer.
2. Temperature and weather conditions:
   a. Do not paint surfaces when surface temperature is below 50 DegF unless product has been formulated specifically for low temperature application or approved in writing by Owner and paint manufacturer's authorized representative.
   b. Avoid painting surfaces exposed to hot sun.
   c. Do not paint on damp surfaces.
3. Immediately after surface has been inspected apply structural steel and miscellaneous steel prime coat in the factory.
   a. Finish coats shall be applied in the field.
   b. Prime coat referred to here is prime coat as indicated in this Section 09905. Structural and miscellaneous steel prime coating applied in factory (shop) as part of fabricator's standard rust inhibiting and protection coating is not acceptable as replacement for specified prime coating.
4. Provide complete coverage to mil thickness specified.
   a. Thickness specified is dry mil thickness.
   b. All paint systems are "to cover." In situations of discrepancy between manufacturer's square footage coverage rates and mil thickness, mil thickness requirements govern.
   c. When color or undercoats show through, apply additional coats until paint film is of uniform finish and color.
5. If so directed by Owner, do not apply consecutive coats until Owner has had an opportunity to observe and approve previous coats.
6. Apply materials under adequate illumination.
7. Evenly spread to provide full, smooth coverage.
8. Work each application of material into corners, crevices, joints, and other difficult to work areas.
9. Avoid degradation and contamination of blasted surfaces and avoid intercoat contamination.
   a. Clean contaminated surfaces before applying next coat.
10. Smooth out runs or sags immediately, or remove and recoat entire surface.
11. Allow preceding coats to dry before recoating.
   a. Recoat within time limits specified by coating manufacturer.
   b. If recoat time limits have expired reprepare surface in accordance with coating manufacturer's printed recommendations.

12. Allow coated surfaces to cure prior to allowing traffic or other Work to proceed.
13. Coat all aluminum in contact with dissimilar materials.

B. Prime Coat Application:
1. Prime all surfaces indicated to be painted. Apply prime coat in accordance with coating manufacturer's written instructions and as written in this Section 09905.
2. Ensure field-applied coatings are compatible with factory-applied coatings. Ensure new coatings applied over existing coatings are compatible.
   a. Employ services of coating manufacturer's qualified technical representative.
      1) Certify thru material data sheets.
      2) Perform test patch.
   b. If field-applied coating is found to be not compatible, require the coating manufacturer's technical representative to recommend, in writing, product to be used as barrier coat, thickness to be applied, surface preparation and method of application.
   c. At Contractor's option, coatings may be removed, surface reprepared, and new coating applied using appropriate paint system listed in this Section 09905.
      1) All damage to surface as result of coating removal shall be repaired to original condition or better by Contractor at no additional cost to Owner.
3. Prime ferrous metals embedded in concrete to minimum of 1 IN below exposed surfaces.
4. Back prime all wood scheduled to be painted, prior to installation.
5. Apply zinc-rich primers while under continuous agitation.
6. Ensure abrasive blasting operation does not result in embedment of abrasive particles in paint film.
7. Brush or spray bolts, welds, edges and difficult access areas with primer prior to primer application over entire surface.
8. When surface is scheduled to receive painted finish, completely fill all pores of concrete block using block filler specified.
9. Touch up damaged primer coats prior to applying finish coats. Restore primed surface equal to surface before damage.

C. Finish Coat Application:
1. Apply finish coats in accordance with coating manufacturer's written instructions and in accordance with this Section 09905.
2. Touch up damaged finish coats using same application method and same material specified for finish coat. Prepare damaged area in accordance with this Section 09905.

3.6 FIELD QUALITY CONTROL

A. Maintain daily record:
1. Provide the following information prior to each coat at beginning and end of each Day's painting work for each different area painted:
   a. Start time, end time, and all breaks taken by painters.
   b. Sky condition.
   c. Air temperature.
   d. Relative humidity.
   e. Wind speed and direction.
   f. Moisture content of substrate prior to each coat.
   g. Provisions utilized to maintain work area within manufacturer's recommended application parameters.

h. Surface temperature of substrate to which paint is being applied.
2. Date and time of application for each following coat.
3. Moisture content of substrate prior to each coat.
4. Provisions utilized to maintain temperature and humidity of work area within manufacturer's recommended ranges.

B. Measure wet coating with wet film thickness gages.
C. Measure coating dry film thickness in accordance with SSPC PA-2 using Mikrotest gage calibrated against National Bureau of Standards "Certified Coating Thickness Calibration Standards."
1. Owner may measure coating thickness at any time during project to ensure conformance with this Section 09905.

D. Measure surface temperature of items to be painted with surface temperature gage specifically designed for such.
E. Measure substrate humidity with humidity gage specifically designed for such.
F. Provide wet paint signs.
G. Thickness and Holiday checking:
1. Thickness of coatings and paint shall be checked by Contractor with a nondestructive, magnetic-type thickness gauge. Coating integrity of all interior coated surfaces shall be tested by Contractor with an approved holiday testing device. Holiday detectors shall not exceed the voltage recommended by the manufacturer of the coating system. No pinholes or other irregularities will be permitted in the final coating.

H. Contractor to provide on-Site testing of materials to verify VOC content.

3.7 CLEANING

A. Clean paint spattered surfaces. Use care not to damage finished surfaces.
B. Upon completion of painting, replace hardware, accessories, plates, fixtures, and similar items.
C. Remove surplus materials, scaffolding, and debris. Leave areas broom clean.

3.8 ONE-YEAR WARRANTY INSPECTION

A. A one-year warranty inspection will be conducted during the eleventh month following completion of all coating and painting Work. All defective Work shall be repaired in strict accordance with this specification and to the satisfaction of Owner.
B. Notification - Owner will establish the date for the inspection at least 30 Days in advance. If an inspection date has not been established within twelve months after the coating and painting Work was completed, the first anniversary inspection shall be considered to be waived.
C. Inspection - The entire interior coating system shall be visually inspected as specified in Quality Assurance. All defective coating as well as damaged or rusting spots of the tank shall be satisfactorily repaired by and at the sole expense of Contractor. All repaired areas shall then be electrically tested as specified in the above mentioned section. The entire exterior paint system shall be inspected as specified in Quality Assurance. All defective, damaged, or rusting areas shall be satisfactorily repaired by and at the sole expense of Contractor.
D. Inspection Report - Owner will prepare and deliver to the Contractor an inspection report covering the first anniversary inspection, setting forth the number and type of failures observed, the percentage of the surface area where failure has occurred and the names of the persons making the inspection.

E. Schedule - Upon completion of inspection and receipt of Inspection Report as noted herein, Owner shall establish a date for Contractor to proceed with the remedial work. Any delay on the part of Contractor to meet the schedule established by Owner shall constitute breach of this Contract and Owner may proceed to have defects remedied as outlined under the General Conditions.
F. Remedial Work - Any location where the coating or paint has peeled, bubbled, or cracked, and any location where rusting is evident, shall be considered to be a failure of the system. Contractor shall make repairs at all points where failures are observed by removing the deteriorated coating or paint, cleaning the surface and recoating or repainting with the same system. If the area of failure exceeds 25 percent of the total coated or painted surface, the entire coating or paint system shall be removed and repainted in accordance with the original specification.
G. Costs - All noted costs for Contractor's inspection and all costs for repair shall be borne by Contractor and in figuring his bid, the Contractor shall include an appropriate amount for testing and repair as no additional allowance will be paid by Owner for said inspection and repair.

END OF SECTION

DIVISION 10

SPECIALTIES

SECTION 10405

IDENTIFICATION, STENCILING, AND TAGGING SYSTEMS

PART 1 GENERAL

1.1 SUMMARY

A. Section Includes:
   1. Tag, tape and stenciling systems for equipment, piping, valves, pumps, and similar items, and hazard and safety signs

1.2 REFERENCES

A.	ASME A13.1	Scheme for the Identification of Piping Systems
B.	ISA	Instrumentation, Systems, and Automation Society
C.	NEMA/ANSI Z535.1	Safety Color Code
D.	NEMA/ANSI Z535.2	Environmental and Facility Safety Signs
E.	NEMA/ANSI Z535.3	Criteria for Safety Symbols
F.	NEMA/ANSI Z535.4	Product Safety Signs and Labels
G.	NFPA 70	National Electrical Code (NEC)
H.	OSHA 29 CFR 1910.145	Specification for Accident Prevention Signs and Tags

1.3 SUBMITTALS

A. Shop Drawings:
   1. Product technical data including:
      a. Catalog information for all identification systems.
      b. Acknowledgement that products submitted meet requirements of standards referenced.
   2. Identification register, listing all items in Part 3 to be identified, type of identification system to be used, lettering, location and color.

PART 2 PRODUCTS

2.1 MANUFACTURERS

A. Subject to compliance with the Contract Documents, the following manufacturers are acceptable:
   1. W.H. Brady Co.
   2. Panduit.
   3. Seton.
   4. National Band and Tag Co.
   5. Carlton Industries, Inc.
   6. Or Approved Equal.

2.2 MANUFACTURED UNITS

A. Type A1 - Round Metal Tags:
   1. Materials:
      a. Aluminum or stainless steel.
      b. Stainless steel shall be used in corrosive environments.
   2. Size:
      a. Diameter: 1-1/2 IN minimum.

b. Thickness: 0.035 IN (20 GA) minimum.
3. Fabrication:
a. 3/16 IN minimum mounting hole.
b. Legend: Stamped and filled with black coloring.
4. Color: Natural.

B. Type A2 - Rectangle Metal Tags:
1. Materials: Stainless steel.
2. Size:
a. 3-1/2 IN x 1-1/2 IN minimum.
b. Thickness: 0.036 IN (20 GA) minimum.
3. Fabrication:
a. 3/16 IN minimum mounting hole.
b. Legend: Stamped and filled with black coloring.
4. Color: Natural.

C. Type A3 - Metal Tape Tags:
1. Materials: Aluminum or stainless steel.
2. Size:
a. Width 1/2 IN minimum.
b. Length as required by text.
3. Fabrication:
a. 3/16 IN minimum mounting hole.
b. Legend: Embossed.
4. Color: Natural.

D. Type B1- Square Non-Metallic Tags:
1. Materials: Fiberglass reinforced plastic.
2. Size:
a. Surface: 2 x 2 IN minimum.
b. Thickness: 100 mils.
3. Fabrication:
a. 3/16 IN mounting hole with metal eyelet.
b. Legend: Preprinted and permanently embedded and fade resistant.
4. Color:
a. Background: Manufacturer standard or as specified.
b. Lettering: Black.

E. Type B2 - Non-Metallic Signs:
1. Materials: Fiberglass reinforced or durable plastic.
2. Size:
a. Surface: As required by text.
b. Thickness: 60 mils minimum.
3. Fabrication:
a. Rounded corners.
b. Drilled holes in corners with grommets.
c. Legend: Preprinted, permanently embedded and fade resistant for a 10 year minimum outdoor durability.
4. Color:
a. Background: Manufacturer standard or as specified.
b. Lettering: Black.

5. Standards for OSHA signs: NEMA/ANSI Z535.1, NEMA/ANSI Z535.2, NEMA/ANSI Z535.3, NEMA/ANSI Z535.4, OSHA 29 CFR 1910.145.

F. Type C - Phenolic Name Plates:
1. Materials: Phenolic.
2. Size:
   a. Surface: As required by text.
   b. Thickness: 1/16 IN.
3. Fabrication:
   a. Two (2) layers laminated.
   b. Legend: Engraved through top lamination into bottom lamination.
   c. Two (2) drilled side holes, for screw mounting.
4. Color: Black top surface, white core, unless otherwise indicated.

G. Type D - Self-Adhesive Tape Tags and Signs:
1. Materials: Vinyl tape or vinyl cloth.
2. Size:
   a. Surface: As required by text.
   b. Thickness: 5 mils minimum.
3. Fabrication:
   a. Indoor/Outdoor grade.
   b. Weather and UV resistant inks.
   c. Permanent adhesive.
   d. Legend: Preprinted.
   e. Wire markers to be self-laminating.
4. Color: White with black lettering or as specified.
5. Standards for OSHA signs: NEMA/ANSI Z535.1, NEMA/ANSI Z535.2, NEMA/ANSI Z535.3, NEMA/ANSI Z535.4, OSHA 29 CFR 1910.145.

H. Type E - Heat Shrinkable Tape Tags:
1. Materials: Polyolefin.
2. Size: As required by text.
3. Fabrication:
   a. Legend: Preprinted.
4. Color: White background, black printing.

I. Type F - Underground Warning Tape:
1. Materials: Polyethylene.
2. Size:
   a. 6 IN wide (minimum).
   b. Thickness: 3.5 mils.
3. Fabrication:
   a. Legend: Preprinted and permanently imbedded.
   b. Message continuous printed.
   c. Tensile strength: 1750 psi.
4. Color: As specified.

J. Type G - Stenciling System:
1. Materials:
   a. Exterior type stenciling enamel.
   b. Either brushing grade or pressurized spray can form and grade.
2. Size: As required.

3. Fabrication:
   a. Legend: As required.
4. Color: Black or white for best contrast.

K. Underground Tracer Wire:
1. Materials:
   a. Wire:
      1) 12 GA AWG.
      2) Solid.
   b. Wire nuts: Waterproof type.
   c. Split bolts: Brass.

2.3 ACCESSORIES

A. Fasteners:
1. Bead chain: #6 brass, aluminum or stainless steel.
2. Plastic strap: Nylon, urethane or polypropylene.
3. Screws: Self-tapping, stainless steel.
4. Adhesive, solvent activated.

2.4 MAINTENANCE MATERIALS

A. Where stenciled markers are provided, clean and retain stencils after completion and include in extra stock, along with required stock of paints and applicators.

PART 3 EXECUTION

3.1 GENERAL INSTALLATION

A. Install identification devices at specified locations.
B. All identification devices to be printed by mechanical process, hand printing is not acceptable.
C. Attach tags to equipment with sufficient surface or body area with solvent activated adhesive applied to back of each tag.
D. Attach tags with 1/8 IN round or flat head screws to equipment without sufficient surface or body area, or porous surfaces.
   1. Where attachment with screws should not or cannot penetrate substrate, attach with plastic strap.
E. Single items of equipment enclosed in a housing or compartment to be tagged on outside of housing.
   1. Several items of equipment mounted in housing to be individually tagged inside the compartment.
F. Tracer Wire:
   1. Attach to pipe at a maximum of 10 FT intervals with tape or tie-wraps.
   2. Continuous pass from each valve box and above grade at each structure.
   3. Coil enough wire at each valve box to extend wire a foot above the ground surface.
   4. 1,000 FT maximum spacing between valve boxes.
   5. If split bolts are used for splicing, wrap with electrical tape.
   6. If wire nuts are used for splicing, knot wire at each splice point leaving 6 IN of wire for splicing.
   7. Use continuous strand of wire between valve box where possible.
      a. Continuous length shall be no shorter than 100 FT.

3.2 SCHEDULES

A. Process Systems:
   1. General:
      a. Provide arrows and markers on piping.
         1) At 20 FT maximum centers along continuous lines.
         2) At changes in direction (route) or obstructions.
         3) At valves, risers, "T" joints, machinery or equipment.
         4) Where pipes pass through floors, walls, ceilings, cladding assemblies and like obstructions provide markers on both sides.
      b. Position markers on both sides of pipe with arrow markers pointing in flow direction.
         1) If flow is in both directions use double headed arrow markers.
      c. Apply tapes and stenciling in uniform manner parallel to piping.
   2. Trenches with piping:
      a. Tag type: Type F - Underground Warning Tape
      b. Location: Halfway between top of piping and finished grade.
      c. Letter height: 1-1/4 IN minimum.
      d. Natural gas or digester gas:
         1) Color: Yellow with black letters.
         2) Legend:
            (a) First line: “CAUTION CAUTION CAUTION”
            (b) Second line: “BURIED GAS LINE BELOW”
      e. Potable water:
         1) Color: Blue with black letters.
         2) Legend:
            (a) First line: “CAUTION CAUTION CAUTION”
            (b) Second line: “BURIED WATER LINE BELOW”
      f. Storm and sanitary sewer lines:
         1) Color: Green with black letters.
         2) Legend:
            (a) First line: “CAUTION CAUTION CAUTION”
            (b) Second line: “BURIED SEWER LINE BELOW”
      g. (Nonpotable) water piping, except 3 IN and smaller irrigation pipe:
         1) Color: Green with black letters.
         2) Legend:
            (a) First line: “CAUTION CAUTION CAUTION”
            (b) Second line: “BURIED NONPOTABLE WATER LINE BELOW”
      h. Chemical feed piping (e.g., chlorine solution, polymer solution, caustic solution, etc.):
         1) Color: Yellow with black letters.
         2) Legend:
            (a) First line: “CAUTION CAUTION CAUTION”
            (b) Second line: “BURIED CHEMICAL LINE BELOW”
      i. Other piping (e.g., compressed air, irrigation, refrigerant, heating water, etc.):
         1) Color: Yellow with black letters.
         2) Legend:
            (a) First line: “CAUTION CAUTION CAUTION”
            (b) Second line: “BURIED PIPE LINE BELOW”

3. Yard valves, buried, with valve box and concrete pad:
   a. Tag type: Type A2 - Rectangle Metal Tags.
   b. Fastener: 3/16 IN x 7/8 IN plastic screw anchor with 1 IN #6 stainless steel pan head screw.
   c. Legend:
      1) Letter height: 1/4 IN minimum.
      2) Valve designation as indicated on the Drawings (e.g., "V-xxx").
4. Valves and slide gates:
   a. Tag type:
      1) Outdoor locations: Type B1 - Square Non-Metallic Tags.
      2) Indoor non-corrosive:
         (a) Type A1 - Round Metal Tags.
         (b) Type B1 - Square Non-Metallic Tags.
      3) Indoor corrosive:
         (a) Stainless steel Type A1 - Round Metal Tags.
         (b) Type B1 - Square Non-Metallic Tags.
   b. Fastener:
      1) Type A1: Chain of the same material.
      2) Type B1: Stainless steel chain.
   c. Color: Per ASME A13.1 corresponding to the piping system.
   d. Legend:
      1) Letter height: 1/4 IN minimum.
      2) Valve designation as indicated on the Drawings (e.g., "V-xxx").
5. Process equipment (e.g., pumps, pump motors, etc.):
   a. Tag type:
      1) Type B2 - Non-Metallic Signs.
      2) Type D - Self-Adhesive Tape Tags and Signs.
      3) Type G - Stenciling System.
   b. Fastener:
      1) Self.
      2) Screws.
      3) Adhesive.
   c. Legend:
      1) Letter height: 1/2 IN minimum.
      2) Equipment designation as indicated on the Drawings (e.g., "Vertical Turbine Pump P-xxx").
6. Piping systems:
   a. Tag type:
      1) Outdoor locations: Type G - Stenciling System.
      2) Indoor locations:
         (a) Type D - Self-Adhesive Tape Tags and Signs.
         (b) Type G - Stenciling System.
   b. Fastener: Self.
   c. Color: Per ASME A13.1.
   d. Legend:
      1) Letter height: Manufacturers standard for the pipe diameter.
      2) Mark piping in accordance with ASME A13.1.
      3) Use piping designation as indicated on the Drawings.

4) Arrow: Single arrow.

7. Equipment that starts automatically:
   a. Tag type:
      1) Type B2 - Non-Metallic Signs.
      2) Type D - Self-Adhesive Tape Tags and Signs.
   b. Fastener:
      1) Type B2 - Screw or adhesive.
      2) Type D - Self.
   c. Size: 5 IN x 7 IN
   d. Location: Vertical Turbine Pumps.
   e. Legend:
      1) OSHA Warning Sign.
      2) Description of Warning: "THIS MACHINE STARTS AUTOMATICALLY".

B. Instrumentation Systems:
1. Instrumentation Equipment (e.g., flow control valves, primary elements, etc.):
   a. Tag type:
      1) Outdoor locations: Type B1 - Square Non-Metallic Tags.
      2) Indoor non-corrosive:
         (a) Type A1 - Round Metal Tags.
         (b) Type B1 - Square Non-Metallic Tags.
      3) Indoor corrosive:
         (a) Stainless steel Type A1 - Round Metal Tags.
         (b) Type B1 - Square Non-Metallic Tags.
   b. Fastener:
      1) Type A1: Chain of the same material.
      2) Type B1: Stainless steel chain.
   c. Legend:
      1) Letter height: 1/4 IN minimum.
      2) Equipment ISA designation as indicated on the Drawings (e.g., "FIT-xxx").
2. Enclosure for instrumentation and control equipment, (e.g., PLC control panels, etc.):
   a. Tag type: Type C - Phenolic Name Plates.
   b. Fastener: Screws.
   c. Legend:
      1) Letter height: 1/2 IN minimum.
      2) Equipment name (e.g., "PLC CONTROL PANEL PCP-xxx").
3. Components inside equipment enclosure, (e.g., PLC's, control relays, contactors, and timers):
   a. Tag type: Type D - Self-Adhesive Tape Tags.
   b. Fastener: Self.
   c. Legend:
      1) Letter height: 3/16 IN minimum.
      2) Description or function of component (e.g., "PLC-xxx" or "CR-xxx").
4. Through enclosure door mounted components (e.g., selector switches, controller digital displays, etc.):
   a. Tag type: Type C - Phenolic Name Plates.
   b. Fastener: Screws.
   c. Legend:
      1) Letter height: 1/4 IN minimum.

2) Component ISA tag number as indicated on the Drawings (e.g., “HS-xxx”).

C. HVAC Systems:
1. Enclosure for instrumentation and control equipment, (e.g., fan control panels, etc.):
   a. Tag type: Type C - Phenolic Name Plates.
   b. Fastener: Screws.
   c. Legend:
      1) Letter height: 1/2 IN minimum.
      2) Equipment designation as indicated on the Drawings (e.g., "FAN CONTROL PANEL FCP-xxx").
2. Components inside equipment enclosure, (e.g., controller’s, control relays, contactors, and timers):
   a. Tag type: Type D - Self-Adhesive Tape Tags and Signs.
   b. Fastener: Self.
   c. Legend:
      1) Letter height: 3/16 IN minimum.
      2) Description or function of component (e.g., "CR-xxx").
3. Through enclosure door mounted equipment (e.g., selector switches, controller digital displays, etc.):
   a. Tag type: Type C - Phenolic Name Plates.
   b. Fastener: Screws.
   c. Legend:
      1) Letter height: 1/4 IN minimum.
      2) Component tag number as indicated on the Drawings or as defined by contractor (e.g., “HS-xxx”).

D. Electrical Systems:
1. Trenches with ductbanks, direct-buried conduit, or direct-buried wire and cable.
   a. Tag type: Type F - Underground Warning Tape.
   b. Letter height: 1-1/4 IN minimum.
   c. Location:
      1) Where trench is 12 IN or more below finished grade: In trench 6 IN below finished grade.
      2) Where trench is less than 12 IN below finished grade: In trench 3 IN below finished grade.
   d. Electrical power (e.g., low and medium voltage):
      1) Color: Red with black letters.
      2) Legend:
         (a) First line: “CAUTION CAUTION CAUTION”.
         (b) Second line: “BURIED ELECTRIC LINE BELOW”.
   e. Communications (e.g., telephone, instrumentation, LAN, SCADA):
      1) Color: Orange with black letters.
      2) Legend:
         (a) First line: “CAUTION CAUTION CAUTION”.
         (b) Second line: “BURIED COMMUNICATION LINE BELOW”.
2. Switchgear, switchboards and motor control centers:
   a. Tag type: Type C - Phenolic Name Plates.
   b. Fastener: Screws.

c. Main equipment legend:
   1) Letter height:
      (a) First line: 1 IN minimum.
      (b) Subsequent lines: 3/8 IN minimum.
   2) First line: Equipment name (e.g., "MAIN SWITCHBOARD MSBxxx").
   3) Second line:
      (a) Source of power (e.g., "FED FROM MCCxxx LOCATED IN ROOM xxx").
      (b) The source of power room number is only required when there are multiple electrical rooms, if the source is in another building, the building name or number shall be used.
   4) Third line: System voltage and phase (e.g., “480/277 V, 3PH”).
d. Main and feeder device legend:
   1) Letter height: 3/8 IN minimum.
   2) Description of load (e.g., “MAIN DISCONNECT”, "PUMP Pxxx" or "PANELBOARD HPxxx").

3. Panelboards and transformers:
   a. Tag type: Type C - Phenolic Name Plates.
   b. Fastener: Screws.
   c. Legend:
      1) Letter height:
         (a) First line: 3/8 IN minimum.
         (b) Subsequent lines: 3/16 IN minimum.
      2) First line: Equipment name (e.g., "PANELBOARD LPxxx" or "TRANSFORMER Txxx").
      3) Second line (panelboards only): System voltage and phase (e.g., “208/120V, 3PH”).
4. Transfer switches:
   a. Tag type: Type C - Phenolic Name Plates.
   b. Fastener: Screws.
   c. Legend:
      1) Letter height:
         (a) First line: 3/8 IN minimum.
         (b) Subsequent lines: 3/16 IN minimum.
      2) First line: Equipment name (e.g., "AUTOMATIC TRANSFER SWITCH ATSxxx").
5. Safety switches, separately mounted circuit breakers and motor starters, VFD’s, etc.:
   a. Tag type: Type C - Phenolic Name Plates.
   b. Fastener: Screws.
   c. Legend:
      1) Letter height: 1/4 IN minimum.
      2) First line: Description of load equipment is connected to (e.g., "PUMP Pxxx").
6. Enclosure for instrumentation and control equipment, (e.g., lighting control panels, etc.):
   a. Tag type: Type C - Phenolic Name Plates.
   b. Fastener: Screws.
   c. Legend:
      1) Letter height: 1/2 IN minimum.
      2) Equipment name (e.g., "LIGHTING CONTROL PANEL LCPxxx").

7. Components inside equipment enclosures (e.g., circuit breakers, fuses, control power transformers, control relays, contactors, timers, etc.):
   a. Tag type: Type D - Self-Adhesive Tape Tags and Signs.
   b. Fastener: Self.
   c. Legend:
      1) Letter height: 3/16 IN minimum.
      2) Description or function of component (e.g., "M-xxx", "CR-xxx" or "TR-xxx").
8. Through enclosure door mounted equipment (e.g., selector switches, controller digital displays, etc.):
   a. Tag type: Type C - Phenolic Name Plates.
   b. Fastener: Screws.
   c. Legend:
      1) Letter height: 1/4 IN minimum.
      2) Component tag number as indicated on the Drawings or as defined by contractor (e.g., "HS-xxx").
9. Conductors in control panels and in pull or junction boxes where multiple circuits exist.
   a. Tag type: Type D - Self-Adhesive Tape Tags.
   b. Fastener: Self.
   c. Tag conductor at both ends.
   d. Legend:
      1) Letter height: 1/8 IN minimum.
      2) Circuit number or wire number as scheduled on the Drawings or as furnished with the equipment.
10. Conductors in handholes and manholes.
   a. Tag type: Type A3 - Metal Tape Tags.
   b. Fastener: Nylon strap.
   c. Tag conductor at both ends.
   d. Legend:
      1) Letter height: 1/8 IN minimum.
      2) Circuit number or wire number as scheduled on the Drawings.
11. Grounding conductors associated with grounding electrode system in accordance with the following:
   a. Tag type: Type D - Self-Adhesive Tape Tags.
   b. Fastener: Self.
   c. Legend:
      1) Letter height: 1/8 IN minimum.
      2) Function of conductor (e.g., "MAIN BONDING JUMPER", "TO GROUND RING", "TO MAIN WATER PIPE").
12. Flash protection for switchboards, panelboards, industrial control panels and motor control centers:
   a. Tag type: Type D - Self-Adhesive Tape Signs.
   b. Fastener: Self.
   c. Legend: Per NFPA 70.
13. Entrances to electrical rooms:
   a. Tag type: Type B2 - Non-Metallic Signs.
   b. Fastener: Screw or adhesive.
   c. Size: 5 IN x 7 IN.
   d. Location: Each door to room.

e. Legend:
   1) OSHA Danger Sign.
   2) Description of Danger: "HIGH VOLTAGE, AUTHORIZED PERSONNEL ONLY".

14. Equipment where more than one (1) voltage source is present:
    a. Tag type:
       1) Type B2 - Non-Metallic Signs.
       2) Type D - Self-Adhesive Tape Signs.
    b. Fastener:
       1) Screw or adhesive.
       2) Self.
    c. Size: 1-3/4 IN x 2-1/2 IN.
    d. Location: Exterior face of enclosure or cubical.
    e. Legend:
       1) OSHA Danger Sign.
       2) Description of Danger: "MULTIPLE VOLTAGE SOURCES".

3.3 HAZARD AND SAFETY SIGNS

A. Provide {25} Hazard and Safety Signs:
   1. Type {B2} {D}.
   2. Inscription as directed by Owner.

END OF SECTION

DIVISION 11

EQUIPMENT

SECTION 11005

EQUIPMENT: BASIC REQUIREMENTS

PART 1 GENERAL

1.1 SUMMARY

A. Section Includes:
   1. Requirements of this Specification Section apply to all equipment provided on the Project including that found in Divisions 11, 12, 13, 14, 15, and 16, even if not specifically referenced in individual "Equipment" articles of those Specification Sections.

1.2 REFERENCES

A. ABMA	American Bearing Manufacturers Association
B. AGMA	American Gear Manufacturers Association
C. ASTM E1934	Standard Guide for Examining Electrical and Mechanical Equipment with Infrared Thermography
D. ASTM F593	Standard Specification for Stainless Steel Bolts, Hex Cap Screws, and Studs
E. HI 9.6.4-2000	Centrifugal and Vertical Pumps for Vibration Measurements and Allowable Valves
F. IEC	International Electrotechnical Commission
G. IEEE	Institute of Electrical and Electronics Engineers, Inc.
H. ISO 1940	Mechanical Vibration - Balance Quality Requirements for Rotors in a Constant (Rigid) State - Part 1: Specification and Verification of Balance Tolerances
I. NEMA 250	Enclosures for Electrical Equipment (1000 Volts Maximum)
J. NEMA ICS 6	Enclosures for Industrial Control and System
K. NEMA MG 1	Motors and Generators
L. NETA ATS	Acceptance Testing Specification for Electrical Power Distribution Equipment and Systems
M. NFPA 70	National Electrical Code (NEC), Article 430, Motors
N. NICET	National Institute for Certification in Engineering Technologies
O. NIST	National Institute of Standards and Technology
P. OSHA 29 CFR 1910	Occupational Safety and Health Standards, referred to herein as OSHA Standards
Q. UL 508	Standard for Safety Industrial Control Equipment
R. UL 508A	Standard for Safety Industrial Control Panels

1.3 DEFINITIONS

A. Product: Manufactured materials and equipment.
B. Major Equipment Supports - Supports for Equipment:
   1. Located on slab-on-grade or earth with supported equipment weighing 5000 LBS or more.
C. Equipment:
   1. One (1) or more assemblies capable of performing a complete function.
   2. Mechanical, electrical, instrumentation or other devices requiring an electrical, pneumatic, electronic or hydraulic connection.

3. Not limited to items specifically referenced in "Equipment" articles within individual Specifications.

D. Installer or Applicator:
1. Installer or applicator is the person actually installing or applying the product in the field at the Project site.
2. Installer and applicator are synonymous.

1.4 SUBMITTALS

A. Shop Drawings:
1. General for all equipment:
a. Data sheets that include manufacturer's name and complete product model number.
1) Clearly identify all optional accessories that are included.
b. Acknowledgement that products submitted comply with the requirements of the standards referenced.
c. Manufacturer's delivery, storage, handling, and installation instructions.
d. Equipment identification utilizing numbering system and name utilized in Drawings.
e. Equipment installation details:
1) Location of anchorage.
2) Type, size, and materials of construction of anchorage.
3) Anchorage setting templates.
4) Manufacturer's installation instructions.
f. Equipment area classification rating.
g. Shipping and operating weight.
h. Equipment physical characteristics:
1) Dimensions (both horizontal and vertical).
2) Materials of construction and construction details.
i. Equipment factory primer and paint data.
j. Manufacturer's recommended spare parts list.
k. Equipment lining and coatings.
l. Equipment utility requirements include air, natural gas, electricity, and water.
m. Ladders and platforms provided with equipment:
1) Certification that all components comply fully with OSHA requirements.
2) Full details of construction/fabrication.
3) Scaled plan and sections showing relationship to equipment.
n. Submit written certification that:
1) Equipment conforms to the requirements of Section 1.5 of this specification Section 11005.
2) Written certification to be signed and sealed by a registered professional Civil or Structural Engineer registered in the State of California. Submit certification along with shop drawings.
o. Structural calculations for the required force level for each component as required in Section 1.5 of this specification Section 11005.
1) Provide summary of loads to each anchor.
2) Structural calculations shall be signed and sealed by a registered professional Civil or Structural Engineer registered in the State of California.
3) Number calculation pages.
4) Include equipment data sheets showing equipment plan, elevation and weight.

2. Mechanical and process equipment:
   a. Operating characteristics:
      1) Technical information including applicable performance curves showing specified equipment capacity, rangeability, and efficiencies.
      2) Brake horsepower requirements.
      3) Copies of equipment data plates.
   b. Piping and duct connection size, type and location.
   c. Equipment bearing life certification.
   d. Equipment foundation data:
      1) Equipment center of gravity.
      2) Criteria for designing vibration, special or unbalanced forces resulting from equipment operation.
3. Electric motor:
   a. Motor manufacturer and model number.
   b. Complete motor nameplate data.
   c. Weight.
   d. NEMA design type.
   e. Enclosure type.
   f. Frame size.
   g. Winding insulation class and temperature rise.
   h. Starts per hour.
   i. Performance data:
      1) Motor speed-torque curve superimposed over driven machine speed-torque curve during start-up acceleration and at rated terminal voltage a minimum permissible or specified terminal voltage for all motors over 30 HP.
      2) Time-current plots with acceleration versus current and thermal damage curves at the operating and ambient temperatures and at rated terminal voltage and minimum permissible or specified terminal voltage for all motors over 30 HP.
      3) Guaranteed minimum efficiencies at 100 percent, 75 percent, and 50 percent of full load
      4) Guaranteed minimum power factor at 100 percent, 75 percent, and 50 percent of full load.
      5) Locked rotor and full load current at rated terminal voltage and minimum permissible or specified terminal voltage.
      6) Starting, full load, and breakdown torque at rated terminal voltage and minimum permissible or specified terminal voltage.
   j. Bearing data and lubrication system.
   k. Fabrication and/or layout drawings:
      1) Dimensioned outlined drawing.
      2) Connection diagrams including accessories (strip heaters, thermal protection, etc.).
   l. Certifications:
      1) When utilized with a variable frequency controller, certify motor is inverter duty and the controller and motor are compatible.
         (a) Include minimum speed at which the motor may be operated for the driven machinery.

m. Electrical equipment:
   1) Unless specified in a narrow-scope Specification Section, provide the following:
      (a) Equipment ratings: Voltage, continuous current, kVa, watts, short circuit with stand, etc., as applicable.
   2) Control panels:
      (a) Panel construction.
      (b) Point-to-point ladder diagrams.
      (c) Scaled panel face and subpanel layout.
      (d) Technical product data on panel components.
      (e) Panel and subpanel dimensions and weights.
      (f) Panel access openings.
      (g) Nameplate schedule.
      (h) Panel anchorage.

4. Systems schematics and data:
   a. Provide system schematics where required in system specifications.
      1) Acknowledge all system components being supplied as part of the system.
      2) Utilize equipment, instrument and valving tag numbers defined in the Contract Documents for all components.
      3) Provide technical data for each system component showing compliance with the Contract Document requirements.
      4) For piping components, identify all utility connections, vents and drains which will be included as part of the system.
5. For factory painted equipment, provide paint submittals in accordance with Section 09905 (Painting and Protective Coatings).
6. Qualifications for:
   a. Vibration testing firm and personnel.
   b. Infrared thermography testing firm and personnel.
   c. Electrical equipment and connections testing firm and personnel.
7. Testing plans, in accordance with PART 3 of this Section 11005:
   a. Vibration testing.
   b. Thermography testing.
   c. Electrical Testing Program.

B. Miscellaneous Submittals:
   1. Sample form letter for equipment field certification.
   2. Certification that equipment has been installed properly, has been initially started up, has been calibrated and/or adjusted as required, and is ready for operation.
   3. Certification for major equipment supports that equipment foundation design loads shown on the Drawings or specified have been compared to actual loads exhibited by equipment provided for this Project and that said design loadings are equal to or greater than the loads produced by the equipment provided.
   4. Field noise testing reports if such testing is specified in narrow-scope Specification Sections.
   5. Notification, at least one (1) week in advance, that motor testing will be conducted at factory.
   6. Certification from equipment manufacturer that all manufacturer-supplied control panels that interface in any way with other controls or panels have been submitted to and coordinated with the supplier/installer of those interfacing systems.
   7. Motor test reports.

8. Certification prior to Project closeout that electrical panel drawings for manufacturer-supplied control panels truly represent panel wiring including any field-made modifications.
9. Provide three (3) bound final written reports documenting vibration monitoring and testing for specified equipment.
   a. Include the acceptance criteria of all equipment tested.
   b. Provide individual tabbed sections for information associated with each piece of tested equipment.
10. Preliminary field quality control testing format to be used as a basis for final field quality control reporting.
11. Testing and monitoring reports in accordance with PART 3 of this Specification Section.
12. Certification that driven equipment and VFD are compatible.

1.5 REQUIREMENTS FOR BRACING AND ANCHORING EQUIPMENT

A. General: All equipment, including machinery, pumps, fans, tanks, piping, electrical panels, generators, and their components and appurtenances, including their bracing, supports and anchorages, supplied by manufacturers of suppliers, shall be designed for wind and seismic forces per the 2010 California Building Code (CBC) as follows:
   1. Design for all applicable Load Combinations as indicated on Drawings and in CBC Section 1605.2 or Section 1605.3.1 and Section 1605.4.
   2. Design all equipment subject to wind forces per ASCE 7-05 Chapter 6.
      a. Design tanks and similar equipment for empty condition and wind forces.
      b. Wind Importance Factor I_P = 1.0
   3. The equipment determined to be Nonstructural Components shall comply with all requirements of ASCE 7-05 Chapter 13.
      a. Indicate in submittal calculations Component Type used per ASCE 7-05 Chapter 13 Table 13.6-1.
      b. Seismic Importance Factor I_P = 1.0
      c. W_P = Operating Weight of the Equipment Including Contents
   4. The equipment determined to be Nonbuilding Structures Not Similar to Buildings or Nonbuilding Structures Similar to Buildings shall comply with all requirements of ASCE 7-05 Chapter 15.
      a. Indicate in submittal calculations Structure Type used per ASCE 7-05 Chapter 15 Table 15.4-1 or Table 15.4-2.
      b. Seismic Importance Factor I = 1.0
      c. W_P = Operating Weight of the Equipment Including Contents
   5. Anchorage design shall comply with Appendix D of ACI 318 (Building Code Requirements for Structural Concrete).
      a. For Nonbuilding Structures Not Similar to Buildings or Nonbuilding Structures Similar to Buildings anchors shall comply with IBC Section 1908.1.16.
   6. Each piece of equipment shall be anchored to resist a minimum lateral seismic force required either by Building Code or by the manufacturer of the equipment, or a minimum lateral seismic force of 40 percent of the operating weight of the equipment, whichever is greater. No equipment shall be anchored to vertical structural elements without written approval of the Engineer.
B. Seismic forces shall be considered acting at the center of gravity of the piece under consideration.

C. Anchorages shall be designed and detailed assuming that they will not receive special Inspection as defined in the 2010 California Building Code.
D. Anchorage of equipment shall be coordinated with the concrete subcontractor so that anchorage may be installed at the time of concrete placement. If calculations and anchorage details are not submitted prior to placement of concrete, the Contractor shall be responsible for any strengthening of concrete elements to resist superimposed seismic or wind loading.
E. Equipment with vibration isolators shall be provided with snubbers capable of retaining the equipment in its designated location without any material failure or deformation of the snubbers when exposed to a vertical or horizontal force at the contact surface equal to 100 percent of the operating weight of the equipment. Air gaps between retainer and equipment base shall not exceed 1/4 IN. Deflection must be considered with respect to piping attached to the equipment. Equipment without vibration isolators shall be anchored directly to the supporting floor system.
F. In addition to the anchorage, all equipment shall be internally designed so that all static and moving parts are anchored to the supporting framework to resist the imposed seismic forces. All forces must be transmitted to the base in order to be anchored as required.
G. All piping, raceways, ductwork, accessories, appurtenances, and other items furnished with equipment shall be anchored to resist lateral considered acting at the center of gravity of the piece under consideration.
H. All piping installed shall be anchored to the floor system(s) to resist lateral seismic forces without excessive deflection. This force shall be considered acting at the center of gravity of the pipe under consideration.
I. Piping with flexible connections and/or expansion joints shall be anchored such that the intended uses of these joints are maintained in the piping system.

1.6 TESTING PROGRAMS

A. Vibration Testing Program:
   1. Testing firm:
      a. An independent firm performing, as the sole or principal part of its business for a minimum of 10 years, the inspection, testing, calibration, and adjusting of systems.
      b. Must have an established monitoring and testing equipment calibration program with accuracy traceable in an unbroken chain, according to NIST.
   2. Field personnel:
      a. Minimum of one (1) year field experience covering all phases of field vibration testing and data gathering.
      b. Qualified Vibration Category I certification from the Vibration Institute.
   3. Analysis personnel:
      a. Minimum three (3) years combined field testing and data analysis experience.
      b. Qualified Vibration Category II certification from the Vibration Institute.
B. Electrical Testing Program:
   1. Testing firm:
      a. An independent firm performing, as the sole or principal part of its business for a minimum of 10 years, the inspection, testing, calibration , and adjusting of systems.
      b. Must have an established monitoring and testing equipment calibration program with accuracy traceable in an unbroken chain, according to NIST.
   2. Field personnel:
      a. Minimum of one (1) year field experience covering all phases of electrical equipment inspection, testing, and calibration.

b. Relay test technician having previous experience with testing and calibration of relays of the same manufacturer and type used on project and proficient in setting and testing the types of protection elements used.
c. Supervisor certified by NETA or NICET.

3. Analysis personnel:
a. Minimum three (3) years combined field testing and data analysis experience.
b. Supervisor certified by NETA or NICET.

C. Miscellaneous:
1. A single manufacturer of a "product" to be selected and utilized uniformly throughout Project even though:
a. More than one (1) manufacturer is listed for a given "product" in Specifications.
b. No manufacturer is listed.
2. Equipment, electrical assemblies, related electrical wiring, instrumentation, controls, and system components shall fully comply with specific NEC requirements related to area classification and to NEMA 250 and NEMA ICS 6 designations as indicated on Electrical Power Drawings and defined in Division 16.
3. Variable speed equipment applications: The driven equipment manufacturer shall have single source responsibility for coordination of the equipment and VFD system and sure their compatibility.

PART 2 PRODUCTS

2.1 MANUFACTURERS

A. Subject to compliance with the Contract Documents, the following manufacturers are acceptable:
1. Motors:
a. Baldor.
b. General Electric.
c. Marathon Electric.
d. Reliance Electric.
e. Siemens.
f. Teco-Westinghouse.
g. U.S. Motors.
h. Or approved equal.

2.2 MANUFACTURED UNITS

A. General:
1. Furnished equipment manufacturer’s field quality control services and testing as specified in the individual equipment Specifications.
2. Perform and report on all tests required by the equipment manufacturer’s Operation and Maintenance Manual.
3. Provide testing of electrical equipment and connections in accordance with Division 16.
4. Equip testing and analysis personnel with all appropriate project related reference material required to perform tests, analyze results, and provide documentation including, but not limited to:
a. Contract Drawings and Specifications.
b. Related construction change documentation.
c. Approved Shop Drawings.

d. Approved Operation and Maintenance Manuals.
e. Other pertinent information as required.

B. Equipment Monitoring and Testing Plans:
1. Approved in accordance with Shop Drawing submittal schedule.
2. Included as a minimum:
a. Qualifications of firm, field personnel, and analysis personnel doing the Work.
b. List and description of testing and analysis equipment to be utilized.
c. List of all equipment to be testing, including:
1) Name and tag numbers identified in the Contract Documents.
2) Manufacturer's serial numbers.
3) Other pertinent manufacturer identification,

C. Instruments Used in Equipment and Connections Quality Control Testing:
1. Minimum calibration frequency:
a. Field analog instruments: Not more than 6 months.
b. Field digital instruments: Not more than 12 months.
c. Laboratory instruments: Not more than 12 months.
d. If instrument manufacturer's calibration requirements are more stringent, those requirements shall govern.
2. Carry current calibration status and labels on all testing instruments.
3. See individual testing programs for additional instrumentation compliance requirements.

D. Testing and Monitoring Program Documentation:
1. Provide reports with tabbed sections for each piece of equipment tested.
2. Include all testing results associated with each piece of equipment under that equipment's tabbed section.
a. Include legible copies of all forms used to record field test information.
3. Prior to start of testing, submit one (1) copy of preliminary report format for Owner's Representative review and comment.
a. Include data gathering and sample test report forms that will be utilized.
4. In the final report, include as a minimum, the following information for all equipment tested:
a. Equipment identification, including:
1) Name and tag numbers identified in the Contract Documents.
2) Manufacturer's serial numbers.
3) Other pertinent manufacturer identification,
b. Date and time of each test.
c. Ambient conditions including temperature, humidity, and precipitation.
d. Visual inspection report.
e. Description of test and referenced standards, if any, followed while conducting tests.
f. Results of initial and all retesting.
g. Acceptance criteria.
h. "As found" and "as left" conditions.
i. Corrective action, if required, taken to meet acceptance.
j. Verification of corrective action signed by the Contractor, equipment supplier, and Owner's representative.
k. Instrument calibration dates of all instruments used in testing.
5. Provide three (3) bound final reports prior to Project final completion.

E. Vibration Monitoring and Testing Program:
   1. Perform vibration monitoring and testing for equipment specified in Divisions 11, 12, 13, 14, 15, and 16 during the Equipment Demonstration Period.
   2. Provide vibration testing on all rotating and reciprocating equipment having driver 25 HP and greater.
   3. Additional requirements for vibration monitoring and testing equipment:
      a. Frequency response: 0.18 Hz to 25 kHz.
      b. Resolution: 6400 lines.
      c. Amplitude range: 18 bit for 96 dB dynamic range.
      d. Supports measurements of acceleration, velocity, displacement, envelope demodulation for bearing defect detection.
      e. Capable of two-place computer balancing.
      f. Requirements for vibration sensor:
         1) Sensitivity: +/- 5 percent at 25 DegC= 100 mV/g.
         2) Acceleration range: 80 g peak.
         3) Amplitude nonlinearity: 1 percent.
         4) Frequency response:
            (a) +/- 5 percent = 3-5000 Hz.
            (b) +/- 10 percent = 1-9000 Hz.
         5) Permanently attach vibration test and monitoring mounting pads to mechanical equipment at location recommended by the equipment manufacturer or as recommended by the testing firm.
         6) Acceptability of equipment conditions, except pumps, based on ISO 1940-1 Balance Quality Grade G2.5 criteria.
         7) Acceptability of pumping equipment to be based on HI 9.6.4 criteria.
         8) Repair or replace equipment shown to be out of range of the acceptable tolerance until the equipment meets or exceeds acceptability standards.

F. Electrical Testing Program:
   1. Perform testing on Division 16 equipment and connections in accordance with Division 16 requirements.
   2. Testing of motors:
      a. After installation and prior to energizing the motor, perform inspections and tests per NETA ATS 7.15 for all motors 30 HP or above.
      b. Bump motor to check for correct rotation.
   3. Repair or replace equipment shown to be out of range of the acceptable tolerance until the equipment meets or exceeds acceptability standards.

G. Other Testing:
   1. Perform tests and inspections not specifically listed but required to assure equipment is safe to energize and operate.
   2. Subbase that supports the equipment base and that is made in the form of a cast iron or steel structure that has supporting beams, legs, and cross members that are cast, welded, or bolted shall be tested for a natural frequency of vibration after equipment is mounted.
      a. The ratio of the natural frequency of the structure to the frequency of the disturbing force shall not be between 0.5 and 1.5.

H. Electric Motors:
   1. Where used in conjunction with adjustable speed AC drives, provide motors that are fully compatible with the speed controllers.

2. Design for frequent starting duty equivalent to duty service required by driven equipment.
3. Design for full voltage starting even if driven by VFD.
4. Design bearing life based upon actual operating load conditions imposed by driven equipment.
5. Size for altitude of Project.
6. Furnish with stainless steel nameplates which include all data required by NEC Article 430.
7. Use of manufacturer's standard motor will be permitted on integrally constructed motor driven equipment specified by model number in which a redesign of the complete unit would be required in order to provide a motor with features specified.
8. AC electric motors less than 1/3 HP:
   a. Single phase, 60 Hz, designed for the supply voltage shown on the Drawings.
   b. Permanently lubricated sealed bearings conforming to ABMA standards.
   c. Built-in manual reset thermal protector or integrally mounted manual motor starter with thermal overload element with stainless steel enclosure.
9. AC electric motors 1/3 to 1 HP:
   a. Single or 3 PH, 60 Hz, designed for the supply voltage shown on the Drawings.
   b. Permanently lubricated sealed bearings conforming to ABMA standards.
      1) For single phase motors, provide built-in manual reset thermal protector or integrally mounted manual motor starter with thermal overload element.
10. AC electric motors 1-1/2 to 10 HP:
    a. 3 PH, 60 Hz, designed for the supply voltage shown on the Drawings.
    b. Permanently lubricated sealed bearings conforming to ABMA standards.
    c. For vertical motors provide 15 year, average-life thrust bearings conforming to ABMA standards.
11. AC electric motors greater than 10 HP:
    a. 3 PH, 60 Hz, designed for the supply voltage shown on the Drawings.
    b. Oil or grease lubricated antifriction bearings conforming to ABMA standards.
       1) Design bearing life for 90 percent survival rating at 50,000 HRS of operation for motors up to and including 100 HP.
       2) For motors greater than 100 HP, design bearing life for 90 percent survival rating at 100,000 HRS of operation.
    c. For vertical motors provide 15 year, average-life thrust bearings conforming to ABMA standards.

I. NEMA Design Squirrel Cage Induction Motors:
1. Provide motors designed and applied in compliance with NEMA and IEEE for the specific duty imposed by the driven equipment.
2. Motors to meet NEMA MG 1 (NEMA Premium) {local jurisdiction} efficiencies.
3. Do not provide motors having a locked rotor kVA per HP exceeding the NEMA standard for the assigned NEMA code letter.
4. For use on variable frequency type adjustable speed drives, provide induction motors that are in compliance with NEMA MG 1, Part 31.
5. Design motor insulation in accordance with NEMA standards for Class F insulation with Class B temperature rise above a 40 DegC ambient.
6. Design motors for continuous duty.

7. Size motors having a 1.0 service factor so that nameplate HP is a minimum of 15 percent greater than the maximum HP requirements of the driven equipment over its entire operating range.
   a. As an alternative, furnish motors with a 1.15 service factor and size so that nameplate HP is at least equal to the maximum HP requirements of the driven equipment over its entire operating range.
8. Motor enclosure and winding insulation application:
   a. The following shall apply unless modified by specific specification sections:

MOTOR LOCATION	MOTOR ENCLOSURE / WINDING INSULATION
Unclassified Indoor Areas	DPFG (for horizontal motors), WP-I (for vertical motors) Standard Insulation, TEFC, Standard Insulation
Wet indoor Areas	TEFC, Standard Insulation WP-II (for vertical motors)

NOTE: Provide TENV motors in the smaller horsepower ratings where TEFC is not available.

9. Provide oversize conduit box complete with clamp type grounding terminals inside the conduit box.

2.3 ACCESSORIES

A. Guards:
   1. Provide each piece of equipment having exposed moving parts with full length, easily removable guards, meeting OSHA requirements.
   2. Interior applications:
      a. Construct from expanded galvanized steel rolled to conform to shaft or coupling surface.
      b. Utilize non-flattened type 16 GA galvanized steel with nominal 1/2 IN spacing.
      c. Connect to equipment frame with hot-dip galvanized bolts and wing nuts.
   3. Exterior applications:
      a. Construct from 16 GA stainless steel or aluminum.
      b. Construct to preclude entrance of rain, snow, or moisture.
      c. Roll to conform to shaft or coupling surface.
      d. Connect to equipment frame with stainless steel bolts and wing nuts.
B. Anchorage:
   1. Cast-in-place anchorage:
      a. Provide ASTM F593, Type 316 stainless steel anchorage for all equipment.
      b. Configuration and number of anchor bolts shall be per manufacturer's recommendations.
      c. Provide two (2) nuts for each bolt.
   2. Drilled anchorage:
      a. Adhesive anchors per Section 05500 (Metal Fabrications).
      b. Epoxy grout per Section 03002 (Concrete and Control Density Fill).
      c. Threaded rods same as cast-in-place.
C. Data Plate:
   1. Attach a stainless steel data plate to each piece of rotary or reciprocating equipment.
   2. Permanently stamp information on data plate including manufacturer's name, equipment operating parameters, serial number and speed.

D. Gages:
   1. Provide gages in accordance with Section 13442 (Primary Elements and Transmitters).
   2. Provide at the following locations:
      a. Inlet and outlet of all pumps.
      b. At locations identified on Drawings.
   3. Utilize tapping sleeves for mounting per Section 15061 (Pipe and Pipe Fittings: Basic Requirements).
E. Lifting Eye Bolts or Lugs:
   1. Provide on all equipment 50 LBS or greater.
   2. Provide on other equipment or products as specified in the narrow-scope Specification Sections.

2.4 FABRICATION

A. Design, fabricate, and assemble equipment in accordance with modern engineering and shop practices.
B. Manufacture individual parts to standard sizes and gages so that repair parts, furnished at any time, can be installed in field.
C. Furnish like parts of duplicate units to be interchangeable.
D. Ensure that equipment has not been in service at any time prior to delivery, except as required by tests.
E. Furnish equipment which requires periodic internal inspection or adjustment with access panels which will not require disassembly of guards, dismantling of piping or equipment or similar major efforts.
   1. Quick opening but sound, securable access ports or windows shall be provided for inspection of chains, belts, or similar items.
F. Provide common, lipped base plate mounting for equipment and equipment motor where said mounting is a manufacturer's standard option.
   1. Provide drain connection for 3/4 IN PVC tubing.
G. Machine the mounting feet of rotating equipment.
H. Fabricate equipment which will be subject to Corrosive Environment in such a way as to avoid back to back placement of surfaces that can not be properly prepared and painted.
   1. When such back to back fabrication can not be avoided, provide continuous welds to seal such surfaces from contact with corrosive environment.
I. Critical Speed:
   1. All rotating parts accurately machined and in as near perfect rotational balance as practicable.
   2. Excessive vibration is sufficient cause for equipment rejection.
   3. Ratio of all rotative speeds to critical speed of a unit or components: Greater than 1.2.
J. Control Panels Engineered and Provided with the Equipment by the Manufacturer:
   1. Manufacturer’s standard design for components and control logic unless specific requirements are specified in the specific equipment Specification Section.
   2. NEMA or IEC rated components are acceptable, whichever is used in the manufacturer’s standard engineered design, unless specific requirements are required in the specific equipment Specification Section.
   3. Affix entire assembly with a UL 508A label “Listed Enclosed Industrial Control Panel prior to delivery.
      a. Control panels without an affixed UL 508A label will be rejected.

2.5 SHOP OR FACTORY PAINT FINISHES

A. Electrical Equipment:
   1. Provide factory-applied paint coating system(s) for all electrical equipment components except those specified in Section 09905 (Painting and Protective Coatings) to receive field painting.
      a. Field painted equipment: See Section 09905 (Painting and Protective Coatings) for factory applied primer/field paint compatibility requirements.
B. Field paint other equipment in accordance with Section 09905 (Painting and Protective Coatings).
   1. See Section 09905 (Painting and Protective Coatings) for factory applied primer/field paint compatibility requirements.

2.6 SOURCE QUALITY CONTROL

A. Motor Tests:
   1. Test motors in accordance with NEMA and IEEE standards.
   2. Provide routine test for all motors.
   3. The Owner reserves the right to select and have tested, either routine or complete, any motor included in the project.
      a. The Owner will pay all costs, including shipping and handling, for all motors successfully passing the tests.
      b. The Contractor shall pay all costs, including shipping and handling, for all motors failing the tests.
      c. If two (2) successive motors of the same manufacturer fail testing, the Owner has the right to reject all motors from that manufacturer.

PART 3 EXECUTION

3.1 INSTALLATION

A. Install equipment as shown on Drawings and in accordance with manufacturer's directions.
B. Utilize templates for anchorage placement for slab-mounted equipment.
C. For equipment having drainage requirements such as seal water, provide 3/4 IN PVC or clear plastic tubing from equipment base to nearest floor or equipment drain.
D. Route clear of major traffic areas and as approved by Owner’s Representative.
E. DO NOT construct foundations until major equipment supports are approved.
F. Extend all non-accessible grease fittings using stainless steel tubing to a location which allows easy access of fittings from closest operating floor level.
G. Equipment Base:
   1. Construct level in both directions.
   2. Take particular care at anchor bolt locations so these areas are flat and level.
H. Machine Base:
   1. Mount machine base of rotating equipment on equipment base.
      a. Level in both directions, using a machinist level, according to machined surfaces on base.
   2. Level machine base on equipment base and align couplings between driver and driven unit using steel blocks and shims.
      a. Size blocks and shims to provide solid support at each mounting bolt location.
         1) Provide area size of blocks and shims approximately 1-1/2 times area support surface at each mounting bolt point.

b. Provide blocks and shims at each mounting bolt.
   1) Furnish blocks and shims that are square shape with "U" cut out to allow blocks and shims to be centered on mounting bolts.
c. After all leveling and alignment has been completed and before grouting, tighten mounting bolts to proper torque value.

I. Couplings:
1. Align in the annular and parallel positions.
   a. For equipment rotating at 1200 rpm or less, align both annular and parallel within 0.001 IN tolerance for couplings 4 IN size and smaller.
      1) Couplings larger than 4 IN size: Increase tolerance 0.0005 IN per inches of coupling diameter, i.e., allow 6 IN coupling 0.002 IN tolerance, and allow a 10 IN coupling 0.004 IN tolerance.
   b. For equipment rotating at speeds greater than 1200 rpm allow both annular and parallel positions within a tolerance rate of 0.00025 IN per inch coupling diameter.
2. If equipment is delivered as a mounted unit from factory, verify factory alignment on site after installation and realigned if necessary.
3. Check surfaces for runout before attempting to trim or align units.

J. Grouting:
1. After machine base has been shimmed, leveled onto equipment base, couplings aligned and mounting bolts tightened to correct torque value, place a dam or formwork around base to contain grouting between equipment base and equipment support pad.
   a. Extend dam or formwork to cover leveling shims and blocks.
   b. Do not use nuts below the machine base to level the unit.
2. Saturate top of roughened concrete subbase with water before grouting.
   a. Add grout until entire space under machine base is filled to the top of the base underside.
   b. Puddle grout by working a stiff wire through the grout and vent holes to work grout in place and release any entrained air in the grout or base cavity.
3. When the grout has sufficiently hardened, remove dam or formwork and finish the exposed grout surface to fine, smooth surface.
   a. Cover exposed grout surfaces with wet burlap and keep covering sufficiently wet to prevent too rapid evaporation of water from the grout.
   b. When the grout has fully hardened (after a minimum of seven (7) days) tighten all anchor bolts to engage equipment base to grout, shims, and equipment support pad.
   c. Recheck driver-driven unit for proper alignment.

3.2 INSTALLATION CHECKS

A. For all equipment specifically required in detailed specifications, secure services of experienced, competent, and authorized representative(s) of equipment manufacturer to visit site of work and inspect, check, adjust and approve equipment installation.
   1. In each case, representative(s) shall be present during placement and start-up of equipment and as often as necessary to resolve any operational issues which may arise.

B. Secure from equipment manufacturer's representative(s) a written report certifying that equipment:
   1. Has been properly installed and lubricated.
   2. Is in accurate alignment.
   3. Is free from any undue stress imposed by connecting piping or anchor bolts.
   4. Has been operated under full load conditions and that it operated satisfactorily.

a. Secure and deliver a field written report to Owner immediately prior to leaving jobsite.

C. No separate payment shall be made for installation checks.
1. All or any time expended during installation check does not qualify as Operation and Maintenance training or instruction time when specified.

3.3 IDENTIFICATION OF EQUIPMENT AND HAZARD WARNING SIGNS

A. Identify equipment and install hazard warning signs in accordance with Section 10405 (Identification, Stenciling, and Tagging Systems).

3.4 FIELD PAINTING AND PROTECTIVE COATINGS

A. For required field painting and protective coatings, comply with Section 09905 (Painting and Protective Coatings).

3.5 WIRING CONNECTIONS AND TERMINATION

A. Clean wires before installing lugs and connectors.
B. Coat connection with oxidation eliminating compound for aluminum wire.
C. Terminate motor circuit conductors with copper lugs bolted to motor leads.
D. Tape stripped ends of conductors and associated connectors with electrical tape.
1. Wrapping thickness shall be 150 percent of the conductor insulation thickness.
E. Connections to carry full ampacity of conductors without temperature rise.
F. Terminate spare conductors with electrical tape.

3.6 FIELD QUALITY CONTROL

A. Furnish equipment manufacturer services as specified in the individual equipment Specifications.
B. Inspect wire and connections for physical damage and proper connection.
C. After installation and prior to energizing the motor, provide insulation resistance test of all motors 30 HP and above.
1. Conduct test with 500 or 1000 Vdc megger.
2. Test each phase separately.
3. Disconnect all extraneous leads to the motor.
4. Comply with NEMA MG 1 safety requirements and test procedures.
D. Bump motor to check for correct rotation:
1. Ensure motor has been lubricated.
2. Check prior to connection to driven equipment.
E. Subbase that supports the equipment base and that is made in the form of a cast iron or steel structure that has supporting beams, legs and cross member that are cast welded or bolted, shall be tested for a natural frequency of vibration after equipment is mounted.
1. Keep the ratio of the natural frequency of the structure to the frequency of the disturbing force out of the range from 0.5 to 1.5.
F. Equipment Vibration Monitoring and Testing:
1. Utilize an Owner approved testing agency to perform vibration monitoring and testing on equipment defined in the schedule at the end of this Section.
2. Permanently attach vibration test and monitoring mounting pads to the equipment at locations recommended by the equipment manufacturer or as recommended by the vibration testing agency.
3. Utilize mounting pads suitable for permanent installation and for incorporation into a predictable maintenance program.

4. For variable speed equipment provide vibration testing at 1 Hz increments throughout entire operating range.
5. Diagnosis to include, but is not limited to the following:
   a. Unbalance.
   b. Misalignment.
   c. Bent shaft.
   d. Journal bearing related problems.
   e. Rolling contract bearing problems.
   f. Mechanical looseness.
   g. Resonance.
   h. Foundation flexibility.
   i. Electrically induced problems.
   j. Pump problems.
   k. Fan problems.
   l. Coupling problems.
   m. Drive belt problems.
   n. Gear problems.
   o. Centrifugal compressor problems.
   p. Electric motor induced vibration from VFD or VFD carrier frequency.
6. Provide machinery condition diagnosis based on an acceptable machinery vibration severity guide or machinery fault guide analysis provided by the testing agency, ISO 1940 Balance Quality Grade 6.3 as a minimum.
7. Tolerances for pumping equipment shall be per HI published standards.
8. Repair or replace equipment shown to be out of range of the specified tolerance until the equipment meets the specified normal operation range required in the machinery fault guide analysis.
9. Document testing with written report.
   a. Report to include initial testing results, acceptance criteria, corrective action taken to meet acceptance, verification of corrective action and acceptance report and baseline.

END OF SECTION

SECTION 11060

PUMPING EQUIPMENT: BASIC REQUIREMENTS

PART 1 GENERAL

1.1 SUMMARY

A. Section Includes:
1. Pumping equipment.

1.2 REFERENCES

A. HI Standards for Centrifugal, Rotary and Reciprocating Pumps

1.3 DEFINITIONS

A. The abbreviations are defined as follows:
1. IPS: Iron Pipe Size.
2. NPSHR: Net Positive Suction Head Required.
3. TDH: Total Differential Head.
4. TEFC: Totally Enclosed Fan Cooled.
5. VFD: Variable Frequency Drive.

1.4 SUBMITTALS

A. Shop Drawings:
1. See Section 11005 (Equipment: Basic Requirements).
2. Product technical data including:
   a. Performance data and curves with flow (gpm), head (FT), horsepower, efficiency, NPSH requirements, submergence requirement.
   b. Pump accessory data.
   c. Bearing supports, shafting details and lubrication provisions.
   d. Solids passage information.
3. Certifications:
   a. Certified pump performance curves as described in Article 2.5.
4. Test reports:
   a. Factory hydrostatic test.

B. Miscellaneous:
1. Certifications:
   a. Provide a written statement that manufacturer's equipment has been installed properly, started up and is ready for operation by Owner's personnel.

PART 2 PRODUCTS

2.1 MANUFACTURERS

A. Subject to compliance with the Contract Documents, the following manufacturers are acceptable:
1. Pumps:
   a. See individual pump Specification Sections.
2. Mechanical seals:
   a. Chesterton.
   b. Garlock.

3. Seal water station:
   a. Chesterton.
   b. John Crane.
   c. AESSEAL.

2.2 COORDINATION

A. Fully coordinate all mechanical seal systems specified to ensure pump and seal compatibility.
B. Pump/motor and VFD coordination: See Section 11005 (Equipment: Basic Requirements).

2.3 ACCESSORIES

A. See Section 11005 (Equipment: Basic Requirements).
B. Each Unit:
   1. Lifting eye bolts or lugs.
   2. Plugged gage cock connection at suction and discharge nozzles.
   3. Tapped and plugged openings for casing and bearing housing vents and drains.
   4. Fittings for properly adding flushing lubricant.
   5. Pressure relief fittings for grease lubrication.
C. Packing Seal:
   1. Provide packing unless mechanical seal is specified in narrow-scope pump sections.
   2. Minimum of five (5) rings graphite impregnated synthetic packing.
   3. Provide minimum 1/4 IN DIA supply tap and 1/2 IN DIA minimum drain tap.
   4. Provide split Teflon or bronze water seal ring.
   5. Adjustable split follower cast iron or bronze gland.
D. Mechanical Seals:
   1. Provide as specified in the narrow-scope pump sections.
   2. Provide stationary balanced O-ring type.
   3. Provide water lubrication - cooling.
   4. Materials:
      a. Metal parts except springs: 316 stainless steel.
      b. Springs: Hastelloy C.
      c. Seal faces: Unfilled carbon graphite versus silica-free Grade 99.5 ceramic.
      d. Elastomers: Viton.

2.4 FABRICATION

A. Pump Support:
   1. Design base to support weight of drive, shafting and pump.
   2. Comply with HI vibration limitations.
   3. Mount horizontal pump, motor and coupling on single piece drip lip type baseplate.
   4. Mount vertical pumps on single piece pedestal baseplate.
   5. Fabricate to withstand all operating loads transmitted from the pump and drive.

2.5 SOURCE QUALITY CONTROL

A. If specifically required in the individual pump specification sections, provide factory tests:
   1. All units:
      a. Hydrostatic test at 150 percent of shutoff head for a minimum of 5 minutes.
   2. Adjustable speed units:
      a. Head (FT) verses flow (gpm) pump curves:
         1) Maximum, minimum and two (2) equally spaced intermittent speeds.

2) Efficiencies along each curve.
3) Brake horsepower along each curve.

3. Constant speed units:
   a. Head (FT) versus flow (gpm) pump curves:
      1) Efficiencies along curve.
      2) Brake horsepower along each curve.
4. Results certified by a registered professional engineer.

B. Statically and dynamically balance each pump per HI standards.

PART 3 EXECUTION

3.1 INSTALLATION

A. See Section 11005(Equipment: Basic Requirements).

B. Floor or Pad-Mounted Units (Non-Submersible):
1. Align vertically and horizontally level, wedge and plumb units to match piping interfaces.
2. Assure no unnecessary stresses are transmitted to equipment flanges.
3. Tighten flange bolts at uniform rate and manufacturer's recommended torque for uniform gasket compression.
4. Support and match flange faces to uniform contact over entire face area prior to bolting pipe flange and equipment.
5. Permit piping connecting to equipment to freely move in directions parallel to longitudinal centerline when and while bolts in connection flange are tightened.
6. Grout equipment into place prior to final bolting of piping but not before initial fitting and alignment.
7. Assemble connecting piping with gaskets in place and minimum of four (4) bolts per joint installed and tightened.
   a. Test alignment by loosening flange bolts to see if there is any change in relationship of piping flange with equipment connecting flange.
   b. Realign as necessary, install flange bolts and make equipment connection.
8. Field paint units as defined in Section 09905 (Painting and Protective Coatings).
9. Provide pressure gage on discharge of all pumps and on suction and discharge of all non-submersible units.

3.2 FIELD QUALITY CONTROL

A. Provide services of equipment manufacturer's field service representative(s) to:
1. Inspect equipment covered by these Specifications.
2. Supervise pre-start adjustments and installation checks.
3. Conduct initial startup of equipment and perform operational checks.

END OF SECTION

SECTION 11072

PUMPING EQUIPMENT: VERTICAL TURBINE (LINE SHAFT)

PART 1 GENERAL

1.1 SUMMARY

A. Section Includes:
   1. Vertical turbine pumps.

1.2 REFERENCES

A. AISI	American Iron and Steel Institute
B. ANSI B16.1	Cast-Iron Pipe Flanges and Flanged Fittings, Class 25, 125, 250, and 800
C. ASTM A48	Standard Specification for Gray Iron Castings
D. ASTM A53	Standard Specification for Pipe, Steel, Black and Hot-Dipped, Zinc-Coated Welded and Seamless
E. ASTM A108	Standard Specification for Steel Bars, Carbon, Cold Finished, Standard Quality
F. ASTM A120	Pipe, Steel, Black and Hot-Dipped Zinc-Coated (Galvanized) Welded and Seamless for Ordinary Uses
G. ASTM A276	Standard Specification for Stainless Steel Bars and Shapes
H. ASTM B505	Standard Specification for Copper-Base Alloy Continuous Castings
I. ASTM B584	Standard Specification for Copper Alloy Sand Castings for General Applications
J. AWWA E101	Deep Well Vertical Turbine Pumps - Line Shaft Type
K. HI 9.6.4-2000	Hydraulic Institute Standards
L. SAE	Society of Automotive Engineers
M. NEC	National Electric Code
N. NEMA	National Electrical Manufacturer's Association
O. UL	Underwriter's Laboratories, Inc.

1.3 SUBMITTALS

A. Shop Drawings.
B. Reed Critical frequency calculations showing natural frequency's at least 20 percent outside operating range.

PART 2 PRODUCTS

2.1 MANUFACTURERS

A. Subject to compliance with the Contract Documents, the following manufacturers are acceptable:
   1. Floway (Jim Billings, G3 Engineering, Inc. (916) 624-1040).
   2. Peerless.
   3. Flowserve.
   4. Fairbanks Morse.
   5. Or Approved Equal.

2.2 PERFORMANCE AND DESIGN REQUIREMENTS

A. Performance Parameters:
   1. Recycled Water Pump (RWP-001):
      a. Primary design condition: 2500 gpm at 117 FT TDH and 73 percent bowl efficiency.
      b. Secondary design conditions:
         1) 1,950 gpm at 150 FT and 80 percent efficiency.
         2) 550 gpm at 117 FT and 46 percent efficiency.
      c. Maximum speed: 1800 rpm.
      d. Maximum horsepower: 150 HP.
      e. Column size: 12 IN.
      f. Discharge flange: 12 IN.
      g. Type of discharge head: Surface type, fabricated.
      h. Maximum NPSHr at any design condition: 30 FT.
      i. Wet well dimensions: As indicated on Drawings.

2.3 ACCESSORIES

A. See Section 11005 (Equipment: Basic Requirements).

2.4 COMPONENTS

A. General:
   1. Furnish units consisting of a vertical shaft turbine, direct connected to a vertical solid shaft motor.
   2. Weight of revolving parts of pump including unbalanced hydraulic thrust of impeller is carried by thrust bearing in driver.
   3. Make provision at driver shaft for adjusting impeller with reference to bowls. Furnish a flanged adjustable spacer coupling.
B. Column:
   1. Construct discharge column pipe of steel and supply with flanged connections.
   2. Sandblast column and coat with a minimum 15 mils dry film thickness epoxy system at the factory.
   3. Provide coating equal to that recommended by Tnemec, Koppers or Carboline and approved for use with potable water.
C. Open Line Shaft:
   1. 416 stainless steel, rolled and ground.
   2. Maximum length: 5 FT.
   3. Furnish renewable shaft sleeves constructed from 416 stainless steel at each bearing location.
   4. Undercutting of shafting at sleeve locations is not permitted.
   5. Provide rubber bearings at each column connection supported by retainers butted between machined faces of discharge column.
D. Pump Bowl and Suction Bell:
   1. Provide bowl and suction bell constructed of close grained cast iron, free from imperfections and accurately machined and fitted.
   2. Coat pump bowl water passages with an abrasion-resistant baked enamel, phenolic or epoxy.
   3. Provide minimum 15 mils dry film thickness coating suitable for potable water service.
   4. Design to ensure easy removal of bearings and impeller.

5. Furnish suction bell with flared end to reduce entrance losses and with a sufficient number of vanes to support lower guide bearings and weight of impeller and pump shaft when dismantling pump.

E. Bearings (Bowl):
1. Provide units with sleeve bearings of SAE 600 bronze in each bowl and in suction bell.
2. In bowl, provide main bronze bearing immediately above impeller and a lower bronze bearing immediately below impeller.
3. Provide for lubrication of bowl bearings with pumped liquid.
4. Furnish suction bell bearing having minimum length equal to five shaft diameters.
5. Ensure bell bearing is permanently packed type with packing to be a nonsoluble grease.
6. Provide SAE 40 bronze collar for bell bearing to prevent abrasives from entering bearing.

F. Pump Shaft and Impeller:
1. Provide pump unit shaft constructed of rolled and ground 416 or 410 stainless steel.
2. Furnish enclosed type impellers constructed of bronze and securely attached to impeller shaft.
3. Ensure impeller is accurately fitted and statically and dynamically balanced.
4. Provide bronze replacement wear rings in each bowl to prevent wear on bowls.

G. Discharge Head Assemblies:
1. Design discharge head assembly for 150 psi working pressure and 250 psi test pressure.
2. Provide discharge head for above ground mounting constructed of fabricated steel with integral discharge flange.
3. Furnish ANSI B16.1 150 LB flange.
4. Mount discharge head on fabricated steel base plate.
5. Ensure baseplate is of sufficient size to span opening in support structure.
6. Furnish cartridge style mechanical seal with API 13 seal flush.
7. Provide minimum 15 mils dry film thickness epoxy coating on head water ways and primer or O.D.

H. Suction Strainer:
1. Supply basket type strainer constructed of galvanized steel with net open area of not less than four times the throat area of the suction bell.
2. Maximum opening shall not be more than 75 percent of the minimum opening of the water passage through the bowls and impellers.

I. Data Plates:
1. Provide stainless steel data plate securely attached to pump.
2. Include manufacturer's name, pump size and type, serial number, speed, impeller diameter, capacity and head rating, and other pertinent data.

J. Motors:
1. Inverter duty, vertical solid shaft, squirrel cage, induction type.
2. 460 V, 60 HZ, 3 PH.
3. 120 VAC motor heater.
4. TEFC with 1.15 service factor. Premium Efficiency.
5. Size motor to drive pump continuously over the complete head - capacity range without the load exceeding the nameplate rating.
6. Design motor for 115 DegF ambient.
7. Comply with Section 11005 (Equipment: Basic Requirements).

2.5 MAINTENANCE MATERIALS

A. Extra Materials:
   1. Furnish the Owner the following extra parts for each pump service category:
      a. One set of pump bearings, including bowl, line shaft, and throttle bearing assemblies.
      b. Seal kit: One set.
      c. Bowl wearing rings: One set.

PART 3 EXECUTION

3.1 INSTALLATION

A. Install products in accordance with manufacturer's instructions.

3.2 FIELD QUALITY CONTROL

A. Provide services of equipment manufacturer's field service representative(s) to:
   1. Inspect equipment covered by these Specifications.
   2. Conduct initial startup of equipment and perform operational checks.
   3. Provide a written statement that manufacturer's equipment has been installed properly, started up and is ready for operation by Owner's personnel.
   4. Instruct Owner's personnel for 8 hours at jobsite on operation and maintenance of the equipment.
B. Perform vibration testing per Section 11005 (Equipment: Basic Requirements) after equipment is installed and during demonstration period. Test results to be within limits indicated on Figure 9.6.4.14 of HI Standard 9.6.4-2000.

END OF SECTION

SECTION 11091

AUTOMATIC SELF CLEANING STRAINERS

PART 1 GENERAL

1.1 SUMMARY

A. Section Includes:
   1. Automatic self cleaning strainers.

1.2 REFERENCES

A. AGMA Standards
B. ANSI — American National Standards Institute
C. ASME — American Society of Mechanical Engineers
D. ASTM — ASTM International
E. AWWA — Standards of American Water Works Association
F. HI — Standards of the Hydraulic Institute
G. IEEE — Standards of Institute of Electrical and Electronic Engineers.
H. ISO-9001 — International Quality Code
I. NEC — National Electric Code
J. OSHA — Occupational Safety and Health Act

1.3 SUBMITTALS

A. Shop Drawings:
   1. See Section 11005 (Equipment: Basic Requirements).

1.4 QUALIFICATIONS

A. Manufacturer's Qualifications: Manufacturer selected by Contractor shall have experience in producing similar equipment, and shall show evidence of five (5) installations in satisfactory operation for at least five (5) years.

PART 2 PRODUCTS

2.1 MANUFACTURERS

A. Subject to compliance with the Procurement Documents, the following manufacturers are acceptable:
   1. Amiad Filtration Systems (EBS Suction Scanner).
   2. Or Approved Equal.
B. The piping configuration shown on the Drawings was designed based on Amiad Filtration Systems equipment. An alternative strainer may be submitted. Contractor is responsible for providing the design and any modifications to piping, electrical systems, support systems, etc. required to accommodate this alternative equipment at no additional cost to the Owner.

2.2 DESIGN REQUIREMENTS

A. General:
   1. Strainers shall be of the motorized automatic self-cleaning type. The equipment shall be designed to continuously remove suspended particles from the raw water.

2. The strainers shall be designed for the service described above and shall comply with the following requirements:

Automatic Self-Cleaning Strainers

Number (Minimum)	1
Capacity (GPM)	2500
Flange Size (IN)	12 IN
Max Headloss Clean Including Straining Element (PSI)	2
Velocity (Maximum)	10 ft/sec across screen element
Min. Motor HP	1/2
Raw Water Pressure Range (PSI)	5 - 90
Filter Screen Openings	500 micron

B. Backwash cleaning of the screen shall be accomplished by utilizing the pressure differential across the filter or on a time interval. By opening a 3 IN flush valve the scanner will create high efficiency suction force on each of the six cleaning nozzles. Line flow shall be completely uninterrupted.
C. The strainer shall be rated for service at 150 PSI @ 100 DegF and ASME code stamped. Inlet and outlet connections shall be flanged and designed and constructed in accordance with ANSI and ASME Section VIII, Division 1. The strainer shall be hydrostatically tested to 1-1/2 times the vessel pressure rating.
D. If the raw water pressure is not sufficient to backwash the strainer, the strainer shall be modified to use filtered water for backwashing of the strainer. The design and operating capacity of the membrane system shall be increased by 1 percent to account for strainer backwash water losses.

2.3 MATERIALS AND CONSTRUCTION

A. Construction Materials:
   1. Filter housing and lid: Galvanized steel.
   2. Filter screens: Type 316 stainless steel (weave-wire screen).
   3. Cleaning mechanism:
      a. Brushes: Type 316 stainless steel.
      b. Scanner: Type 316 stainless steel.
   4. Exhaust valve: Epoxy-coated cast iron.
   5. Seals: Natural rubber or teflon.
   6. Control system: Aluminum.
B. Motor:
   1. Motor shall operate on 120/208 volt, 60 Hz, 3 PH power supply.
   2. Motor shall be TEFC-type with worm gear reducer.
C. Controls:
   1. Each automatic strainer shall be furnished with a local control panel (LCP).
   2. Local control panels shall include the following:
      a. All door mounted components shall be NEMA/EEMAC 4X, non-corrosive type.
      b. The LCP shall be factory wired with the following components:
         1) "Power On" light showing through cabinet door.

2) "Backwash Cycle On" light showing through cabinet door.
3) "Differential Pressure" light showing through cabinet door.
4) Test pushbutton to initiate backwash cycle manually.
5) Manual reset pushbuttons for alarms.
6) Adjustable timers to set the backwash interval and duration.
7) Dry contacts for remote monitoring of ready status, operation, and malfunction alarm.
8) Contactor for motor control.
9) Motor starter circuit breaker with lockable handle through cabinet door.
10) Fuse protected 120 VAC control power circuitry powered on load side of motor circuit breaker. Interlocks to prevent strainers in parallel operation from backwashing simultaneously.
11) Provide isolated contacts for the following as applicable:
    (a) Run.
    (b) Auto.
    (c) Fail.

3. All necessary valves, pressure gauges, pressure switches, indicating lights, selector switches, and other appurtenances shall be furnished and installed.
4. Pressure gauges shall be installed on the inlet and outlet piping of each strainer. Gauges shall be 4 IN dial size, 1/2 IN NPT connection, Type 316 stainless steel bourdon tube, Type 316 stainless steel connections, Type 304 stainless steel housing, glass lens, grade 1A accuracy. Gauges shall have a range of 30 inches mercury to 30 psig.
5. The LCPs shall be interlocked with each other such that only one strainer can automatically backwash at a time.

2.4 SPARE PARTS

A. The following spare parts shall be furnished:
1. One motor drive unit.
2. One drive unit gear box.
3. Two limit switches.
4. One set of screen gaskets.
5. One pressure differential switch.
6. Upper bearing O-ring.

2.5 SURFACE PREPARATION AND SHOP PAINTING

A. Refer to Section 09905 (Painting and Protective Coatings).

PART 3 EXECUTION

3.1 INSTALLATION

A. Install according to manufacturer's instructions.
B. See Section 11005 (Equipment: Basic Requirements).

3.2 FIELD QUALITY CONTROL

A. All equipment will be given running tests by the Contractor at the job site following installation of the equipment and controls. Should the tests indicate any malfunction, the Contractor shall make any necessary repairs and adjustments of installation related issues. Defects revealed as a result of the tests shall be repaired by the Contractor. Such tests and adjustments shall be repeated until, in the opinion of the Owner's Representative, the

installation is complete and the equipment is functioning properly and accurately, and is ready for permanent operation.

B. A factory-trained field representative shall check and approve the installation before operation per Section 11005. The representative shall field test and calibrate the equipment to assure that the System operates to the Owner's satisfaction.

3.3 MANUFACTURER'S SERVICES

A. A factory-trained representative shall be provided for startup and test services, and training of operation and maintenance personnel. The field representative may be an employee of the Contractor.

END OF SECTION

DIVISION 13

SPECIAL CONSTRUCTION

SECTION 13121

METAL CANOPY SYSTEMS

PART 1 GENERAL

1.1 SUMMARY

A. Section Includes:
   1. Metal canopy systems:
      a. Canopy design.
      b. Materials.
      c. Fabrication.
      d. Shipment.
      e. Erection.

1.2 REFERENCES

A.	AAMA 621-02	Voluntary Specifications for High Performance Organic Coatings on Coil Coated Architectural Hot Dipped Galvanized (HDG) and Zinc-Aluminum Coated Steel Substrates
B.	AISC	Code of Standard Practice
C.	AISC	Specification for Structural Joints Using ASTM A325 or ASTM A490 Bolts
D.	ASTM A36	Standard Specification for Carbon Structural Steel
E.	ASTM A307	Standard Specification for Carbon Steel Bolts and Studs, 60,000 PSI Tensile Strength
F.	ASTM A325	Standard Specification for Structural Bolts, Steel, Heat Treated, 120/105 ksi Minimum Tensile Strength
G.	ASTM A490	Standard Specification for Heat-Treated Steel Structural Bolts, 150 ksi Minimum Tensile Strength
H.	ASTM A792	Standard Specification for General Requirements, Steel Sheet, Aluminum-Zinc Alloy-Coated by the Hot-Dip Process
I.	ASTM C991	Standard Specification for Flexible Glass Fiber Insulation for Metal Buildings
J.	ASTM E84	Standard Test Method for Surface Burning Characteristics of Building Materials
K.	MBMA	Low Rise Building Systems Manual
L.	SSPC/NACE SP6/NACE No. 3	Commercial Blast Cleaning
M.	UL	Building Materials Directory

1.3 DEFINITIONS

A. Building Code:
   1. The 2010 California Building Code and associated standards, including all amendments.
B. Erector (installer):
   1. Individual(s) actually performing Work on Site.
      a. Erector and installer are synonymous.
C. Nomenclature as listed in Bibliography of the MBMA Low Rise Building Systems Manual.

1.4 SYSTEM DESCRIPTION

A. Canopies shall be non-insulated, rigid steel frame type with single slope type roof.

1.5 SUBMITTALS

A. Product data:
   1. Acknowledgement that products submitted meet requirements of standards referenced.
   2. Manufacturer's technical reference manual containing all of the manufacturer's standard construction details and specifications.
      a. Manufacturer's erection manual containing all details and methods for installation of building frame, roof system, and accessories.
      b. Edit to mark out items not used for this installation.
   3. Structural calculations stamped and signed by a professional Civil or Structural Engineer licensed in the State of California.
      a. Include list of design loads and loads transmitted to foundation through columns and by all equipment and location where loads occur.
      b. Calculations to include column base plate, anchor bolts and reinforced concrete foundation design and motor control center anchorage calculations.
      c. Calculations shall be submitted for information only.
      d. See Section 11005 (Equipment: Basic Requirements) for additional requirements.
B. Fabrication drawings:
   1. Erection drawings minimum scale: 1/8 IN = 1 FT-0 IN.
   2. Details and sections minimum scale: 1-1/2 IN = 1 FT-0 IN.
   3. List of all design loads and combination of loads.
   4. Size and location of each component of the building.
      a. Include clearance under structural framing members.
      b. Include cross-section of components.
   5. Fasteners and details of fasteners connecting each component of the building.
   6. Size, location and details of anchor bolts, base plates, and all other components fastened to the foundation.
   7. Details of facia panels, roof panels, finishes, flashings, closures, closure strips, trim, gutters, downspouts, calking, and all other miscellaneous components.
C. Samples:
   1. Metal color and finish samples of roof and facia panels, roof trim, facia trim, gutters and downspout colors for Owner's Representative selection.
   2. Color chart is not acceptable.
D. Miscellaneous Submittals:
   1. Manufacturer's and Erector's Qualifications.
   2. Manufacturer's approval of erector.
E. Operation and Maintenance Manuals:
   1. Manufacturer’s standard.

1.6 WARRANTY

A. Manufacturer's standard warranty.
B. Manufacturer's 20 year warranty of factory applied premium paint finish against blistering, chipping, cracking, peeling, or fading of siding, facia and roof panels.
C. Manufacturer's 20 year weathertightness warranty of roof assembly.
D. Provide notice of any exceptions taken to warranties.

1.7 QUALIFICATIONS

A. Manufacturer's Qualifications:
   1. Manufacturer must be member in good standing of the MBMA.
   2. Manufacturer must be an AISC Quality Certified Fabricator in the category of Metal Building Systems (MB).
B. Erector Qualification:
   1. Erector (installer) must be approved in writing by metal building manufacturer.
   2. Erector must have minimum of 10 years current experience in erection of similar structures.
C. Manufacturer's Civil or Structural Engineer: Registered in the State of California.

PART 2 PRODUCTS

2.1 MANUFACTURERS

A. Subject to compliance with the Contract Documents, the following manufacturers are acceptable:
   1. Metal building systems:
      a. Butler Manufacturing.
      b. Ceco Building Systems.
      c. American Buildings.
      d. Or approved equal.

2.2 MATERIALS

A. Structural Members: Steel.
B. Anchor Bolts: ASTM A307 or ASTM A36 steel.
C. Fasteners:
   1. Building frame, girts, and purlins: ASTM A325 or ASTM A307 bolts.
   2. Roof and wall panels: Stainless steel.
   3. Miscellaneous fasteners: Stainless steel.
D. Roof and Other Panels: Factory finished steel.
E. Grout: See Section 03002 (Concrete and Control Density Fill).
F. Closures: Neoprene.
G. Calking and Sealants: See Section 03002 (Concrete and Control Density Fill) and Section 07900 (Joints Sealants).
H. Facia Panels: Factory finished steel.
I. Trim: Same material as roof or facia panel.

2.3 ACCESSORIES

A. Framed Openings:
   1. Roofs:
      a. Provide all necessary roof subframing to support roof at design loading.
      b. Purlins, angles, clips:
         1) Steel:
            (a) Factory applied prime coat per Section 09905 (Painting and Protective Coatings).
B. Facias:
   1. All facia areas along the edges of roofs shall be finished with facia trim panels to cover open areas and roof structural members to present a finished appearance.

2.4 CANOPY DESIGN CRITERIA

A. Critical Dimensions:
   1. Roof slope shall be as shown with minimum slope of 1/2 IN per foot.
   2. Provide minimum clear height as shown on Drawings.
B. Canopy Foundation:
   1. All footings, foundations, anchor bolts and piers are indicated on Drawings as minimum requirements.
      a. Canopy foundation design shall include loadings from all components anchored to it including but not limited to:
         1) Canopy.
         2) Motor control centers.
      b. Member sizes and geometry to be coordinated by Contractor.
      c. Do not construct these members until Owner has verified design with approved Shop Drawings of metal canopy being supplied in writing.
   2. Canopy manufacturer to provide design for anchor bolts.
C. Modifications:
   1. Canopies which vary dimensionally from those indicated may be bid providing:
      a. Minimum interior horizontal dimensions and clear heights are maintained.
      b. Foundation re-design and construction costs are included in Bid.
   2. Canopy dimension changes in either horizontal or vertical direction resulting in either 10 percent change of envelope volume or lighting height or spacing shall be addressed by incorporating any necessary changes to electrical system or any other building component impacted, at no additional cost to Owner.
      a. Design changes must be approved by Owner prior to constructing changed item or system.
      b. Does not apply to structural member sizes.
   3. Contractor is responsible for incorporating any necessary changes to foundations or electrical system or to any other canopy component.
      a. Design changes must be approved by Owner prior to constructing changed item or system.
   4. Modifications shall be itemized in a separate attachment to the bid form and the bid price shall include all modifications.
   5. Completed canopy to be free of excessive noise from wind induced vibrations under ordinary weather conditions to be encountered at location of erection, and meet all specified design requirements listed below.
D. Roof Live Loads:
   1. Roof panels:
      a. As indicated on Drawings.
   2. Roof framing members:
      a. Per the 2010 California Building Code.
   3. The above loads are in addition to other applicable loads and shall be applied to the horizontal projection of the roof.
E. Wind Loads:
   1. Design structure for wind loading as set forth in the 2010 California Building Code.
      a. Site Design Criteria indicated on Drawings.
      b. See Section 11005 (Equipment: Basic Requirements) for additional requirements.
F. Seismic (Earthquake) Loads:
   1. Design structure for seismic forces as set forth in the 2010 California Building Code.

a. Site Design Criteria indicated on Drawings.
b. See Section 11005 (Equipment: Basic Requirements) for additional requirements.

G. Auxiliary Loads:
1. Other superimposed loads shall be considered as part of the design requirements and combined with the normal design (dead, live, seismic and wind) loads as prescribed hereafter.
2. Magnitude and location of auxiliary loads as shown on Drawings and as specified.
a. Contractor to coordinate and verify magnitude and location of auxiliary loads before fabrication.

H. Combination of Loads:
1. The combining of dead, live, wind, seismic and auxiliary loads for design purposes shall be as set forth in the 2010 California Building Code, unless otherwise specified.
2. Horizontal sway deflection of building due to combination of required design loads shall comply with requirements of the 2010 California Building Code.
3. Deflection of purlins and secondary members not to exceed L/240 of its span when supporting applicable vertical live, dead, and auxiliary loads.

2.5 FABRICATION

A. General:
1. Fabricate structure, roof panels, accessories and trim in accordance with requirements of AISC and MBMA.
2. Provide all necessary clips, flashing angles, caps, channels, closures, bases and any other miscellaneous trim required for complete water and airtight installation.
a. Provide flashing at all intersections of facia panels and roof panels, and above all openings in panels, in addition to all other flashing required.
1) Flashing shall be formed to completely contain water on the outside of the canopy panels, and shall be watertight and securely fastened in place.
3. Fabricate and prepare material for shipment knocked down.
4. Frame shall be factory punched to receive all fasteners.
5. Finishes:
a. Clean ferrous surfaces of oil, grease, loose rust, loose mill scale, and other foreign substances.
1) All primary and secondary structural steel members, not noted as being galvanized, shall be cleaned in accordance with SSPC SP 6/NACE No. 3.
b. All structural components shall have primer paint coats applied in the shop and finish coats applied in the shop or field.
1) Shop paint, prime and finish coats, all surfaces which will be inaccessible after erection.
2) Paint in accordance with Section 09905 (Painting and Protective Coatings).
3) Paint surfaces of all components not exposed to view.
4) Manufacturer's standard shop applied primer is not acceptable as substitute for primer specified.
c. Trim and roof panels:
1) Exterior surface:
(a) Thermosetting fluoropolymer resin enamel.
(i) Minimum 70 percent "KYNAR" resin.
(b) Meet requirements of AAMA 621-02.
(c) FM Class 1 rated.

(d) Exposed screw heads shall match color of panel.
2) Interior surface:
(a) Manufacturer's standard shop applied polyester coating.

B. Roof Panels:
1. 24 GA minimum, galvalume per ASTM A792.
2. Standing seam interlocking rib configuration.
3. Factory applied color coating.
4. Meet requirements of AAMA 621-02.
5. Length: Sufficient to cover entire length of any unbroken roof slope.
6. Panel width: Manufacturers standard.
7. Profile: Manufacturers standard.
8. Panel depth: Manufacturers standard.
9. Concealed fasteners.

C. Trim Panels:
1. 26 GA minimum, galvalume per ASTM A792.
2. Factory applied color coating.
3. Meet requirements of AAMA 621-02.

2.6 SOURCE QUALITY CONTROL

A. Testing:
1. Employ and pay for the services of a qualified independent testing agency to inspect and test all structural steel work for compliance with Contract Documents.
2. Independent testing agency shall have a minimum of five (5) years performing similar work and shall be subject to Owner's approval.

B. Responsibilities of Testing Agency:
1. Inspect field welding in accordance with Section 6 of AWS Code including the following non-destructive testing:
a. Visually inspect all welds.
b. Test 50 percent of full penetration welds and 10 percent of fillet welds with liquid dye penetrant.
c. Test 20 percent of full penetration welds with ultrasonic or radiographic testing.
2. Inspect high-strength bolting in accordance with Section 9 of the AISC Specification for Structural Joints.
a. Inspect while work is in progress.
3. Inspect structural steel which has been erected.
4. Prepare and submit test reports to Owner’s Representative.
a. Assist Owner’s Representative to determine corrective measures necessary for defective work.

2.7 MAINTENANCE MATERIALS

A. Provide 1 quart of touch up paint for each color provided.

PART 3 EXECUTION

3.1 INSTALLATION

A. Install products in accordance with manufacturer's instructions.
1. Installed tolerances shall be in accordance with AISC Code of Standard Practice.
a. Install products straight without bowing, sagging, or warping.

2. Install all fasteners.
3. Install base plates on grout bed.
   a. Grout bed to be 1 IN thick unless noted otherwise on the Drawings.

B. Separate the roof support member from the roof panel, except at each concealed structural fastener, with a spacer of material having a density of not less than 2 pcf and, if of a combustible material, having a flame spread rating no greater than 25.

C. Fasten roof panels to purlins or secondary support members in accordance with manufacturer's recommendations.

D. Install trim and other miscellaneous items in accordance with manufacturer's instructions and details.

3.2 ADJUSTING AND CLEANING

A. Touch up paint any scratched factory finished surfaces or remove and replace as directed by Owner’s Representative.

B. Remove and replace any damaged panels, trim, frames, etc., as directed by Owner’s Representative.

3.3 SCHEDULE OF CANOPIES

A. MCC-R and Electrical Panels.
   1. Size approximately 11 FT x 32 FT x 10 FT high.
      a. 10 FT height at rear column line.
      b. Provide 2 FT overhangs.
   2. Roof slope from front to rear.
   3. Open sides and ends.
      a. Cross brace at ends.
      b. Front and rear to be completely open.
   4. See Drawings.

END OF SECTION

SECTION 13441

INSTRUMENTATION FOR PROCESS CONTROL: BASIC REQUIREMENTS

PART 1 GENERAL

1.1 SUMMARY

A. Section Includes:
   1. Basic requirements for complete instrumentation system for process control.

1.2 REFERENCES

A. CSA	Canadian Standards Association
B. FM	FM Global
C. ISA 7.0.01	Quality Standard for Instrument Air
D. ISA S5.1	Instrumentation Symbols and Identification
E. ISA S5.3	Graphic Symbols for Distributed Control/Shared Display Instrumentation, Logic and Computer Systems
F. ISA S5.4	Standard Instrument Loop Diagrams
G. ISA S20	Standard Specification Forms for Process Measurement and Control Instruments, Primary Elements and Control Valves
H. NEMA 250	Enclosures for Electrical Equipment (1000 Volts Maximum)
I. NFPA 70	National Electrical Code (NEC)
J. NIST	National Institute of Standards and Technology
K. UL 913	Standard for Safety, Intrinsically Safe Apparatus and Associated Apparatus for Use in Class I, II, and III, Division 1, Hazardous (Classified) Locations

1.3 QUALITY ASSURANCE

A. Qualifications:
   1. Instrumentation subcontractor:
      a. Experience:
         1) Have satisfactorily provided a control system for a minimum of five (5) projects of similar magnitude and function.
B. Miscellaneous:
   1. Comply with electrical classifications and NEMA enclosure types as indicated.

1.4 DEFINITIONS

A. Non-architecturally finished area: Pump, chemical, mechanical, electrical rooms and other similar process type rooms.
B. Outdoor Area: Exterior locations where the equipment is normally exposed to the weather and including below grade structures, such as vaults, manholes, handholes and in-ground pump stations.
C. Calibrate: To standardize a device so that it provides a specified response to known inputs.

1.5 SYSTEM DESCRIPTION

A. Control System Requirements:
   1. The instrument and control system consists of all primary elements, transmitters, switches, controllers, computers, recorders, indicators, panels, signal converters, signal boosters, amplifiers, special power supplies, special or shielded cable, special grounding

or isolation, auxiliaries, software, wiring, and other devices required to provide complete control of the plant as specified in the Contract Documents.

B. All signals shall be directly linearly proportional to measured variable unless specifically noted otherwise.

C. Single Instrumentation Subcontractor:
   1. Furnish and coordinate instrumentation system through a single instrumentation subcontractor.
      a. The instrumentation subcontractor shall be responsible for functional operations of all systems, performance of control system engineering, supervision of installation, final connections, calibrations, preparation of Drawings and Operation and Maintenance Manuals, start-up, training, demonstration of substantial completion and all other aspects of the control system.
   2. Ensure coordination of instrumentation with other Work to ensure that necessary wiring, conduits, contacts, relays, converters, and incidentals are provided in order to transmit, receive, and control necessary signals to other control elements, to control panels, and to receiving stations.

1.6 SUBMITTALS

A. Shop Drawings:
   1. Submittals shall be original printed material or clear unblemished photocopies of original printed material.
      a. Facsimile information is not acceptable.
   2. Product technical data including:
      a. Equipment catalog cut sheets.
      b. Instrument data sheets:
         1) ISA S20 or Approved Equal.
         2) Separate data sheet for each instrument.
      c. Materials of construction.
      d. Physical limits of components including temperature and pressure limits.
      e. Size and weight.
      f. Electrical power requirements and wiring diagrams.
      g. NEMA rating of housings.
      h. Submittals shall be marked with arrows to show exact features to be provided.
   3. Loop diagrams per ISA S5.4.
   4. Comprehensive set of wiring diagrams.
   5. PLC equipment drawings.
   6. Nameplate layout drawings.
   7. Drawings, systems, and other elements are represented schematically in accordance with ISA S5.1 and ISA S5.3.
      a. The nomenclature, tag numbers, equipment numbers, panel numbers, and related series identification contained in the Contract Documents shall be employed exclusively throughout submittals.
   8. All Shop Drawings shall be modified with as-built information/corrections.
   9. All panel and wiring drawings shall be provided in both hardcopy and softcopy.
      a. Furnish electronic files on CD-ROM or DVD-ROM media.
      b. Drawings in AUTO CAD format.
   10. Provide a parameter setting summary sheet for each field configurable device.

11. Certifications:
    a. Documentation verifying that calibration equipment is certified with NIST traceability.
    b. Approvals from independent testing laboratories or approval agencies, such as UL, FM or CSA.
        1) Certification documentation is required for all equipment for which the specifications require independent agency approval.
12. Testing reports: Source quality control reports.

B. Installation, Operation, and Maintenance Manuals:
1. List of factory authorized service agents.

1.7 DELIVERY, STORAGE, AND HANDLING

A. Do not remove shipping blocks, plugs, caps, and desiccant dryers installed to protect the instrumentation during shipment until the instruments are installed and permanent connections are made.

1.8 SITE CONDITIONS

A. Unless indicated otherwise, area designations are as follows:
1. Outdoor area:
    a. Wet.
    b. Subject to temporary submergence when specifically indicated.
2. Non-architecturally finished area: As indicated.

PART 2 PRODUCTS

2.1 NEMA TYPE REQUIREMENTS

A. Provide enclosures/housing for control system components in accordance with the following:
1. Areas designated as wet: NEMA Type 4X.
2. Dry area: NEMA Type 12.

2.2 PERFORMANCE AND DESIGN REQUIREMENTS

A. System Operating Criteria:
1. Performance: All instruments and control devices shall perform in accordance with manufacturer's specifications.

2.3 ACCESSORIES

A. Provide identification devices for instrumentation system components.

PART 3 EXECUTION

3.1 INSTALLATION

A. Wherever feasible, use bottom entry for all conduit entry to instruments and junction boxes.
B. Install electrical components per Division 16.
C. Panel-Mounted Instruments:
1. Mount and wire so removal or replacement may be accomplished without interruption of service to adjacent devices.
2. Locate all devices mounted inside enclosures so terminals and adjustment devices are readily accessible without use of special tools and with terminal markings clearly visible.

3.2 FIELD QUALITY CONTROL

A. Maintain accurate daily log of all startup activities, calibration functions, and final setpoint adjustments.
   1. Documentation requirements include the utilization of the forms located at the end of this Section 13441.
      a. Loop Check-out Sheet.
      b. Instrument Certification Sheet.
      c. Final Control Element Certification Sheet.

B. Instrumentation Calibration:
   1. Verify that all instruments and control devices are calibrated to provide the performance required by the Contract Documents.
   2. Calibrate all field-mounted instruments, other than local pressure and temperature gages, after the device is mounted in place to ensure proper installed operation.
   3. Calibrate in accordance with the manufacturer's specifications.
   4. Replace any instrument which cannot be properly adjusted.
   5. Calibration equipment shall be certified by an independent agency with traceability to NIST.
      a. Certification shall be up-to-date.
      b. Use of equipment with expired certifications shall not be permitted.
   6. Calibration equipment shall be at least three (3) times more accurate as the device being calibrated.

C. Loop check-out requirements are as follows:
   1. Check control signal generation, transmission, reception and response for all control loops under simulated operating conditions by imposing a signal on the loop at the instrument connections.
      a. Use actual signals where available.
      b. Closely observe controllers, indicators, transmitters, HMI displays, recorders, alarm and trip units, remote setpoints, ratio systems, and other control components.
         1) Verify that readings at all loop components are in agreement.
         2) Make corrections as required.
            (a) Following any corrections, retest the loop as before.
   2. In addition to any other as-recorded documents, record all setpoint and calibration changes on all affected Contract Documents and turn over to the Owner.

D. Provide verification of system assembly, power, ground, and I/O tests.

E. Verify existence and measure adequacy of all grounds required for instrumentation and controls.

END OF SECTION

SECTION 13442

PRIMARY ELEMENTS AND TRANSMITTERS

PART 1 GENERAL

1.1 SUMMARY

A. Section Includes:
   1. Flow components.
   2. Level components.
   3. Pressure components.
   4. Analytical components.

B. Related Sections:
   1. Section 13441 (Instrumentation for Process Control: Basic Requirements).

1.2 REFERENCES

A.	AISI	American Iron and Steel Institute
B.	ANSI	American National Standards Institute
C.	ASME B16.5	Pipe Flanges and Flanged Fittings
D.	ASME B31.1	Power Piping
E.	ASTM A276	Standard Specification for Stainless Steel Bars and Shapes
F.	ASTM B124	Standard Specification for Copper and Copper Alloy Forging Rod, Bar, and Shapes
G.	ASTM B283	Standard Specification for Copper and Copper-Alloy Die Forgings (Hot-Pressed)
H.	ASTM B453	Standard Specification for Copper-Zinc-Lead Alloy (Leaded-Brass) Rod, Bar, and Shapes
I.	NEMA250	Enclosures for Electrical Equipment (1000 Volts Maximum)
J.	USDIBR	Water Measurement Manual

1.3 SYSTEM DESCRIPTION

A. The instruments specified in this section 13442 are the primary element components required.

1.4 SUBMITTALS

A. Shop Drawings:
   1. See Section 13441 (Instrumentation for Process Control: Basic Requirements).

PART 2 PRODUCTS

2.1 MANUFACTURERS

A. Subject to compliance with the Contract Documents, the manufacturers listed in the Articles describing the elements are acceptable.

2.2 FLOW COMPONENTS

A. Magnetic Flow Meters:
   1. Acceptable manufacturers:
      a. ABB.
      b. Rosemount.

c. Endress + Hauser.
d. Or Approved Equal.

2. Materials:
   a. Liner: Teflon or rubber.
   b. Electrode: Monel.
   c. Body: Ductile iron or steel, powder coated.
3. Design and fabrication:
   a. Utilize characterized field principle of electromagnetic induction to produce signal directly proportional to flow rate.
   b. High input impedance pre-amplifiers.
      1) Minimum impedance: 10^{10} ohms.
   c. Provide flanged end connections per ASME B16.5 rated for piping system operating and test conditions.
   d. Operating pressure: 100 psi.
   e. Operating temperature: 100 DegF.
   f. Grounding requirements:
      1) Nonmetallic or lined pipe:
         (a) Inlet and outlet grounding rings of same material as electrode.
      2) Conductive piping:
         (a) Conductive path between the meter and the piping flanges.
   g. Provide cable between magnetic flow meter and transmitter.
   h. Pulsed DC magnetic field excitation.
   i. Automatic zero.
   j. Adjustable low flow cutoff.
   k. Minimum signal lock (empty tube zero) to prevent false measurement when tube is empty.
   l. Inaccuracy:
      1) Above 10 percent of range: +/-1.0 percent of rate.
      2) Below 10 percent of range: +/-0.1 percent of range setting.
      3) Add +0.1 percent of range to above inaccuracies for analog outputs.
   m. 4-20 mA DC isolated output into maximum 800 ohms.
   n. Power supply: 117 V +/-10 percent, 60 Hz.
   o. Indication of flow rate and totalized flow at transmitter.
   p. Meter operable as specified in liquids with 5.0 micro mho/cm or more conductivity.
   q. Transmitter electronics shall use microprocessor based architecture and be configured using parameters.
4. Schedule:

TAG NUMBER	SERVICE	FLOW RANGE (GPM)	METER SIZE (IN)
FE/FIT-001	Filtered Wastewater	0 - 500	4
FE-FIT-002	Filtered Wastewater	0 - 5000	14

INEGRAL, FIELD OR PANEL-MOUNTED TRANSMITTER
Field Panel

2.3 LEVEL ELEMENTS

A. Submersible Level Sensor/Transmitter:
   1. Acceptable manufacturers:
      a. Siemens/US Filter series A1000, Model 157GSCD.
      b. Or Approved Equal.
   2. Select range closest to measured span.
   3. Cable length to reach terminal connection panel.
   4. 4-20 mA output, loop powered.
   5. NEMA 4X upper panel (terminal connector) with breather bladder and 4-20 mA connection terminals.
   6. Provide proper length 316 stainless steel suspension cable and transmitter pipe.
   7. Schedule:
      a. LE/LT-003, Storage reservoir, 0-15 FT.

2.4 PRESSURE COMPONENTS

A. Pressure Transmitters:
   1. Acceptable manufacturers:
      a. Rosemount, Model 3051.
      b. Foxboro, I/A series.
      c. Honeywell 100e.
      d. Or Approved Equal.
   2. Materials:
      a. Isolating diaphragm: 316 stainless steel.
      b. Process flanges and adapters: 316 stainless steel.
      c. Housing: Aluminum.
      d. Vent/drain valve: 316 stainless steel.
      e. Fill fluid:
         1) Utilize halocarbon fill for process applications involving strong oxidizing agents.
            (a) Agents include but are not limited to: Cl2, KMN04, FeCl, Na0H, and Na0Cl.
         2) Utilize manufacturer's standard fill for other applications.
            (a) Ensure fill is suitable for application temperatures.
   3. Design and fabrication:
      a. Smart transmitters utilizing microprocessor based electronics.
      b. Output: 4-20 mA DC proportional to pressure.
      c. Nonvolatile EEPROM memory.
      d. Power supply: 24 Vdc.
      e. Adjustable zero and span.
      f. Temperature limits: -20 to 180 DegF.
         1) -4 to 175 DegF for LCD indicators.
      g. Overpressure limits: Withstand 150 percent of stated maximum service pressure without damage.
      h. Humidity limits: 0 to 100 percent relative humidity.
      i. Damping: Adjustable between 0 and 32 seconds.
      j. Inaccuracy (includes effects of linearity, repeatability and hysteresis): +/-0.10 percent of calibrated span for 15:1 rangeability.
      k. Stability: +/-0.2 percent of upper range limit for 12 months.

l. Temperature effect:
   1) Total effect including span and zero errors: +/-0.2 percent of upper range limit per 100 DegF for minimum 15:1 rangeability.
m. Minimum 1/2 IN pressure connection.
n. Equip with test jacks or accessible terminals for testing output.
o. Equip with isolation valve and test connections with isolation valves and/or plugs.

4. Schedule:

TAG NUMBER	SERVICE	SPAN
PIT-004	Filtered Wastewater	0 - 60 psi

B. Pressure Gage:
1. Acceptable manufacturers:
   a. Ashcroft.
   b. Ametek.
   c. Or Approved Equal.
2. Materials:
   a. Bourdon tube, socket, connecting tube: 316 stainless steel.
   b. Case: Phenolic.
   c. Pressure snubber:
      1) Filter disc: 316 stainless steel.
      2) Housing: Brass or 316 stainless steel.
3. Accessories:
   a. Provide valve at point of connection to equipment and at panel if panel mounted.
   b. Utilize pressure snubbers with porous metal discs to provide pulsation dampening on gage applications as shown on schedule.
   c. Provide 1/2 IN stainless steel antisiphon pigtail inlet connection for hot water and steam applications.
4. Design and fabrication:
   a. All components suitable for service at:
      1) 250 DegF.
      2) The maximum process temperature to which the gage is to be exposed.
   b. Provide viewer protection from element rupture.
   c. Calibrate gages at jobsite for pressure and temperature in accordance with manufacturer's instructions.
   d. Unless otherwise required by codes, provide stem mounted or flush mounted, as required, with dial diameter as follows:

PIPE SIZE	DIAL SIZE	GAGE CONNECTION
1-1/2 IN or less	2-1/2 IN	1/4 IN
Larger than 1-1/2 IN	4-1/2 IN	1/2 IN

   e. Equip with white faces, black numerals and black pointers.
   f. Gage tapping position to be clear of equipment functions and movements, and protected from maintenance and operation of equipment.
      1) Gage to be readable from an accessible standing position.
   g. Gage accuracy: 1 percent of full range.

h. Select gage range so that:
   1) The normal operating value is in the middle third of the dial.
   2) Maximum operating pressure does not exceed 75 percent of the full scale range.

C. Schedule:

TAG NUMBER	APPLICATION	PRESSURE RANGE (PSI)	DIAL SIZE (IN)	PROTECTOR REQUIREMENTS	SNUBBER REQ'D
PI-004	Filtered Wastewater	0 - 60	4	No	Yes

2.5 ANALYTICAL ELEMENTS

A. pH Sensor and Transmitter:
   1. Acceptable manufacturers:
      a. Rosemount Analytical.
      b. Hach Instruments.
      c. Or Approved Equal.
   2. Materials:
      a. Body, cover: Polyethersulfone (PES), KYNAR, (polyvinylidene fluoride (PVDF)), liquid crystal polymer, epoxy (less than 140F).
      b. O-rings: VITON.
   3. Design and fabrication:
      a. Integral pre-amplifier to convert high impedance pH into stable, noise-free signal (if not furnished with integral transmitter).
      b. Automatic temperature compensation.
      c. Shielded cable.
      d. Moisture-proof cover.
      e. Sensitivity: 0.01 pH.
      f. Range: 0-14 pH.
      g. Rated 100 psi for inline mounting in pipeline.
      h. Transmitter:
         1) Local digital display.
            (a) LCD or LED.
            (b) Minimum 3-1/2 digit.
         2) Current output: Isolated 4-20 mA DC.
         3) Power supply: 24 Vdc for 2-wire transmitter.
         4) Ambient temperature: -4 to 122 DegF.
         5) Ambient humidity: 0-95 percent.
         6) Accuracy: +0.01 pH.
         7) Repeatability: +0.1 pH.
         8) Temperature compensated: 32 to 212 DegF.
         9) Temperature coefficient:
            (a) Input: +0.0017 pH/DegF.
            (b) Output: +0.0033 pH/DegF.
         10) NEMA 4X enclosure.

4. Schedule:

TAG NUMBER	SERVICE	MOUNTING TYPE
AIT-001	Filtered Wastewater	Guardrail Aim

2.6 PIPE, TUBING, AND FITTINGS

A. Acceptable Manufacturers:
   1. Tube fittings:
      a. Parker CPI.
      b. Swagelok.
      c. Or Approved Equal.

B. Instrument Tubing and Fittings:
   1. Material:
      a. Tubing: ASTM A269, Grade TP 316 stainless steel.
      b. Straight fittings: 316 stainless steel per ASME SA-479 or ASTM A276.
      c. Shaped bodies: ASME SA-182 F316 stainless steel.
   2. Design and fabrication:
      a. Tubing:
         1) Seamless.
         2) Fully annealed.
         3) Maximum hardness: 80 Rb.
         4) Free from surface scratches and imperfections.
         5) Diameter: 1/2 IN OD unless specified otherwise.
         6) Wall thickness:
            (a) Meet requirements of ASME B31.1, Paragraph 122.3.
            (b) Minimum 0.049 IN for 1/2 IN OD tubing.
      b. Fittings:
         1) Flareless.
         2) Compression type.

C. Instrument Piping:
   1. For applications where the instrument is supported solely by the sensing line, (e.g., pressure gauge directly mounted to process line) utilize piping as specified below.
      a. Diameter: 1/2 IN unless specified otherwise.
      b. Schedule 80.
      c. 316 stainless steel.

2.7 INSTRUMENT VALVES

A. Process instrument multi-valve manifolds, isolation, vent and blow-down valves:
   1. Acceptable manufacturers:
      a. Whitey Co.
      b. Anderson-Greenwood USA, Inc.
      c. Or Approved Equal.
   2. Materials:
      a. Packing:
         1) 450 DegF and above: Graphite.
         2) Below 450 DegF: Graphite or Teflon.
      b. Body: 316 stainless steel per ASTM A479.

c. Stem: 316 stainless steel per ASTM A276.
d. Ball: 316 stainless steel per ASTM A276.
e. Support rings: 316 stainless steel per ASTM A276.
f. Seats:
1) Metal:
(a) 316 stainless steel per ASTM A276.
2) Soft:
(a) Teflon, Delrin.
(b) Only utilized on applications where manufacturer's temperature and pressure ratings exceed process design conditions.

3. Design and fabrication:
a. Either of the following:
1) Ball valve with 1/4 turn activation.
2) Free-swiveling ball stem.
b. Provide body wall thickness sufficient for process design conditions per ASME B31.1.
c. Temperature: Manufacturer's temperature rating for all components shall exceed process design conditions.

2.8 ACCESSORIES

A. Furnish all mounting brackets, hardware and appurtenances required for mounting primary elements and transmitters.
1. Materials, unless otherwise specified, shall be as follows:
a. Bolts, nuts, washers, expansion anchors: 316 stainless steel.
b. Mounting brackets:
1) Standard: 316 stainless steel.
c. Mounting plates, angles:
1) Standard: Galvanized carbon steel.
2) Wet and corrosive areas: 316 stainless steel.
d. Instrument pipe stands:
1) Standard: Hot-dip galvanized 2 IN schedule 40, ASTM A106, Grade B carbon steel.
2) Wet and corrosive areas: 316 stainless steel.

B. Tubing Support Angles and Brackets: Type 316 stainless steel.
C. Tubing Tray or Channel:
1. Aluminum.
2. Provide dielectric material between tray or channel and tubing.

D. Cable lengths between sensors and transmitters shall be continuous (without splices) and as required to accommodate locations as indicated.

PART 3 EXECUTION

3.1 INSTALLATION

A. Install products in accordance with manufacturer's instructions.
B. Install instrument mounting pipe stands level and plumb.
C. Instrument Valves:
1. Orient stems for proper operation.
2. Install arrays orderly and neat in appearance with true horizontal and vertical lines.

3. Provide a minimum of 2 IN clearance between valve handle turning radii where there are multiple valve handles appearing in a straight line.
4. Valves shall have bonnets and any soft seals removed during welding or soldering into the line.
   a. When cool, reassemble the valves.
5. Support each valve individually.
   a. The tubing system does not qualify as support for the valve.

D. Locate instrument piping and tubing so as to be free of vibration and interference with other piping, conduit, or equipment.
E. Keep foreign matter out of the system.
F. Remove all oil on piping and tubing with solvent before piping and tubing installation.
G. Plug all open ends and connections to keep out contaminants.
H. Tubing Installation:
   1. General:
      a. Install such that tube shows no sign of crumpling, bends of too short a radius, or flattening, etc.
      b. Make tube runs straight and parallel or perpendicular to the floor, equipment and piping runs.
      c. For liquid and steam applications, slope continuously from the process to the instrument with a minimum slope of 0.50 IN per foot.
      d. For gas and air applications, slope continuously from the instrument to the process with a minimum slope of 0.50 IN per foot.
      e. If the sensing line cannot be continuously sloped, install high point vents and low point drains.
      f. Keep instrument tubing clean during all phases of work.
      g. Blow out with clean, dry, oil-free air immediately before final assembly.
      h. Cut by sawing only and debur.
   2. Bending:
      a. Make each bend with tube bender of the correct size for the tube.
      b. Make all bends smooth and continuous.
      c. Rebending is not permitted.
      d. Make bends true to angle and radius.
      e. Maintain a true circular cross section of tubing without buckling or undue stretch of tube wall.
      f. Allowable tolerance for flattening out of tubing bends: Maximum of 8 percent of the OD for stainless steel tubing.
      g. Minimum bending radius for stainless steel tubing:

TUBE OD, INCHES	MINIMUM BENDING RADIUS, INCHES
1/4	9/16
3/8	15/16
1/2	1-1/2

h. Minimum bending radius for type L, hard (drawn) copper:

TUBE OD, INCHES	MINIMUM BENDING RADIUS, INCHES
3/8	1-3/4
1/2	2-1/2

3. Tubing support:
   a. Intermittently support by clamping to support angle.
   b. Install supports to be self-draining, supported by hangers, or cantilevered from walls or structural beams.
   c. Support at 5 FT-0 IN maximum spans for horizontal or vertical runs.
   d. Use tubing trays in areas where spans between supports are greater than 5 FT and for all signal tubing support.
   e. Support each tubing tray at 10 FT maximum spans.
   f. Align tubing in orderly rows and retain in the tray by bolted clips.
      1) The use of spring or speed clips is not acceptable.
   g. Maintain order of the tubing throughout the length of the tray.
   h. Locate angle, channel and tray installation to protect tubing from spills and mechanical damage.
   i. Locate support members to clear all piping, conduit, equipment, hatchways, monorails, and personnel access ways and allow access for equipment operation and maintenance.
   j. Support trays to prevent torsion, sway or sag.
   k. Permanently attach supports to building steel or other permanent structural members.
   l. Arrange supports and trays so that they do not become a trough or trap.
4. Routing and orientation:
   a. Route to maintain a minimum headroom clearance of 8 FT.
   b. Locate and orient valves and specialties so that they are accessible for operation and maintenance from the operating floor.
      1) Do not route through or over equipment removal areas, below monorails or cranes nor above or below hatches.
5. Expansion and vibration provisions:
   a. Provide horizontal expansion loops at the process connections.
   b. Route tubing parallel to relative motion through sleeved supports that allow linear tube movement.
   c. Cold springing of tubing to compensate for thermal expansion is prohibited.

I. Threaded Connection Seals:
   1. Use Tite-Seal or acceptable alternate.
   2. Use of lead base pipe dope or Teflon tape is not acceptable.
   3. Do not apply Tite-Seal to tubing threads of compression fittings.

J. Instrument Mounting:
   1. Mount all instruments where they will be accessible from fixed ladders, platforms, or grade.
   2. Mount all local indicating instruments with face forward toward the normal operating area, within reading distance, and in the line of sight.
   3. Mount instruments level, plumb, and support rigidly.

4. Mount to provide:
   a. Protection from heat, shock, and vibrations.
   b. Accessibility for maintenance.
   c. Freedom from interference with piping, conduit and equipment.

3.2 TRAINING

A. Provide on-Site training.

END OF SECTION

SECTION 13446

CONTROL AUXILIARIES

PART 1 GENERAL

1.1 SUMMARY

A. Section Includes:
   1. Signal modules.
   2. Pilot devices.
      a. Selector switches.
      b. Pushbuttons.
      c. Indicating lights.
   3. Relays/timers.
      a. Control relay.
      b. Time delay relays.
   4. Termination equipment.
      a. Terminal blocks.
      b. Fuse holders.
   5. Power supplies.
      a. DC power supplies.
   6. Voltage surge protection devices.
   7. Running time indicator.
   8. Digital indicator.

B. Related Sections:
   1. Section 16491 (Low Voltage Surge Protection Devices (SPD)).

1.2 REFERENCES

A.	ISA S18.1	Annunciator Sequences and Specifications
B.	NEMA ICS 2-125	
C.	NEMA ICS 2-216.22	Standards for Industrial Control Devices, Controllers and Assemblies
D.	NEMA ICS 2-218	
E.	NEMA ICS 6	Enclosures for Industrial Controls and Systems

1.3 SUBMITTALS

A. Shop Drawings:
   1. See Section 13441 (Instrumentation for Process Control: Basic Requirements).
   2. See Section 16491 (Low Voltage Surge Protective Devices (SPD)).

B. Installation, Operation and Maintenance Manuals:
   1. Loop isolators.
   2. Relays.
   3. Timers.
   4. Pilot Devices.
   5. Digital Indicators.

1.4 QUALITY ASSURANCE

A. Ensure units comply with electrical area classifications and NEMA enclosure type indicated.

PART 2 PRODUCTS

2.1 MANUFACTURERS

A. Subject to compliance with the Contract Documents, the manufacturers as listed in the articles describing the devices are acceptable.
B. Provide similar components from the same manufacturer for uniformity of appearance, operations, and maintenance.

2.2 SIGNAL MODULE

A. Loop Isolators:
   1. Acceptable manufacturers:
      a. AGM Electronics.
      b. Moore Industries.
      c. Or Approved Equal.
   2. Design and fabrication:
      a. Solid state electronics.
      b. Transmit analog output signal directly proportional to measured input signal.
      c. Power source: 24 V DC.
      d. Analog input: 4-20 mA DC.
      e. Output signal: 4-20 mA DC into 1400 ohms.
      f. Impedance:
         1) Voltage input: 10 Meg.
         2) Current input: 50 ohms.
         3) Voltage output: 1 ohm.
         4) Current output: 1650 ohms.
      g. Accuracy: Better than ± 0.10 percent of span.
      h. Isolation: Up to 500 V rms (input, output and case).
      i. Temperature effect: ±0.0025 percent of span per DegF.
      j. Ambient temperature range: 0-140 DegF.
      k. Factory calibrated.

2.3 PILOT DEVICES

A. Selector Switches:
   1. Acceptable manufacturers:
      a. Cutler Hammer.
      b. Allen-Bradley.
      c. Or Approved Equal.
   2. Design and fabrication:
      a. Heavy-duty type.
      b. Oiltight.
      c. Rotary cam units conforming to NEMA ICS 2-216.22.
      d. Supply switches having number of positions required with contact blocks to fulfill functions shown and specified.
      e. UL listed.
      f. Maintained contact type.
      g. Knob type operators.
      h. Black colored operators.
      i. Designed with cam and contact block with approximate area of 2 IN SQ.
      j. Legend plate marked per Contract Documents.

k. Contact block requirements:
   1) Dry and indoor locations: Standard contact blocks rated for 10 A continuous current.
   2) Wet or outside locations: Hermetically sealed contact blocks.

B. Pushbuttons:
1. Acceptable manufacturers:
   a. Cutler Hammer.
   b. Allen-Bradley.
   c. Or Approved Equal.
2. Materials:
   a. Backing diaphragm: Buna-N.
3. Design and fabrication:
   a. Heavy-duty type.
   b. Oiltight.
   c. Conforming to NEMA ICS 2-216.22.
   d. Diaphragm backed.
   e. UL listed.
   f. Emergency stop pushbuttons to have mushroom head operator and maintained contact.
   g. Non-illuminated type:
      1) Momentary contact with necessary contact blocks.
      2) Molded, solid color melamine buttons.
      3) Standard flush operators with full shroud.
      4) Red colored buttons for START or ON and green color for STOP or OFF.
      5) Appropriate contact blocks to fulfill functions shown or specified.
   h. Contact block requirements:
      1) Dry and indoor locations: Standard contact blocks rated for 10 A continuous current.
      2) Wet or outside locations: Hermetically sealed contact blocks.
      3) Legend plate marked per Contract Documents.
   i. Illuminating type:
      1) Momentary contact with necessary contact blocks.
      2) Serves as both pushbutton control and indicating light.
      3) Red colored lenses for START or ON and green for STOP or OFF.
      4) LED full voltage light unit with lens and panel gasket.
      5) Legend plate marked per Contract Documents.
      6) Appropriate contact blocks to fulfill functions shown or specified.

C. Indicating Lights:
1. Acceptable Manufacturers:
   a. Cutler Hammer.
   b. Allen-Bradley.
   c. Or Approved Equal.
2. Design and fabrication:
   a. Heavy duty type.
   b. Oiltight.
   c. Type allowing replacement of bulb without removal from control panel.
   d. UL listed.
   e. Legends marked per Contract Documents.

f. Nominal 2 IN SQ face.
g. Glass lens, LED lamp.
h. Color code lights as follows:
   1) Red: ON or running; valve open.
   2) Blue: Standby; auto mode; ready.
   3) Green: OFF or stopped; valve closed.
   4) Dark grey: Fail or off-line.
   5) Yellow: Alarm or error.
   6) Orange: Manual mode.
i. Legend plate engraved for each light.

2.4 RELAYS/TIMERS

1. Control Relays:
2. Acceptable manufacturers:
   a. Idec.
   b. Potter & Brumfield.
   c. Allen-Bradley.
   d. Or Approved Equal.
3. Design and fabrication:
   a. Plug-in general purpose relay.
   b. Blade connector type.
   c. Switching capacity: 10 A.
   d. Contact material: Silver cadmium oxide.
   e. Provide relays with a minimum of 3 SPDT contacts.
   f. Coil voltage: 120 V AC or 24 V DC.
   g. Relay sockets are DIN rail mounted.
   h. Internal neon or LED indicator is lit when coil is energized.
   i. Clear polycarbonate dust cover with clip fastener.
   j. Check button.
   k. Temperature rise:
      1) Coil: 85 DegF max.
      2) Contact: 65 DegF max.
   l. Insulation resistance: 100 Meg min.
   m. Frequency response: 1800 operations/hour.
   n. Operating temperature: -20 to +150 DegF.
   o. Life expectancy:
      1) Electrical: 500,000 operations or more.
      2) Mechanical: 50,000,000 operations or more.
   p. UL listed or recognized.

B. Time Delay Relays:
   1. Acceptable manufacturers:
      a. Eagle Signal Controls.
      b. Idec.
      c. Or Approved Equal.
   2. Design and fabrication.
      a. Melt design test and performance requirements of NEMA ICS 2-218.
      b. Heavy-duty.
      c. Solid-state construction.

d. External adjusting dial.
e. Auxiliary relays as required to perform functions specified or indicated.
f. Operates on 117 V AC (±10 percent) power source.
g. Contact rating: A150 per NEMA ICS 2-125.
h. Furnish with "on" and "timing out" indicators.

2.5 TERMINATION EQUIPMENT

A. Terminal Blocks:
1. Acceptable manufacturers:
   a. Phoenix Contact.
   b. Allen-Bradley.
   c. Or Approved Equal.
2. Design and fabrication:
   a. Modular type with screw compression clamp.
   b. Screws: Stainless steel.
   c. Current bar: Nickel-plated copper allow.
   d. Thermoplastic insulation rated for -40 to +90 DegC.
   e. Wire insertion area: Funnel-shaped to guide all conductor strands into terminal.
   f. Spacing: 6 mm.
   g. Wire size: 22-12 AWG.
   h. Rated voltage: 600 V.
   i. Din rail mounting.
   j. UL listed.
3. Standard-type block.
   a. Rated current: 30 A.
   b. Color: Gray body.
4. Bladed-type block:
   a. Terminal block with knife blade disconnect which connects or isolated the two sides of the block.
   b. Rated current: 10 A.
   c. Color:
      1) Panel control voltage leaves enclosure - normal: Gray body, orange switch.
      2) Foreign voltage entering enclosure: Orange body, orange switch.
5. Grounded-type block:
   a. Electrically grounded to mounting rail.
   b. Use to terminal ground wires and analog cable shields.
   c. Color: Green and yellow body.

B. Fuse Holders:
1. Acceptable manufacturers:
   a. Phoenix Contact.
   b. Allen-Bradley.
   c. Or Approved Equal.
2. Design and fabrication:
   a. Modular-type with screw compression clamp.
   b. Screws: Stainless steel.
   c. Current bar: Nickel-plated copper alloy.
   d. Thermoplastic insulation rated for -40 to +105 DegC.
   e. Wire insertion area: Funnel-shaped to guide all conductor strands into terminal.

f. Blocks can be ganged for multi-pole operation.
g. Spacing: 9.1 mm.
h. Wire size: 30-12 AWG.
i. Rated voltage: 300 V.
j. Rated current: 12 A.
k. Fuse size: 1/4 x 1-1/4.
l. Blown fuse indication.
m. DIN rail mounting.
n. UL listed.

2.6 POWER SUPPLIES

A. DC Power Supplies:
1. Acceptable manufacturers:
   a. Condor.
   b. International Power.
   c. Or Approved Equal.
2. Design and fabrication:
   a. Converts 120 V AC input to DC power at required voltage.
   b. Linear, open-frame power supply.
   c. Sized as required by the load. Minimum 2.4 A output.
   d. AC input: 120 V AC +10 percent -13 percent; 47 to 63 HZ.
   e. Line regulation: ±0.05 percent for a 10 percent change.
   f. Load regulation: ±0.05 percent for a 50 percent load change.
   g. Output ripple: 3 mV +0.05 percent of output voltage, peak to peak maximum.
   h. Transient response: Less than 50uS for 50 percent load change.
   i. Short circuit protection: Automatic current limit/foldback.
   j. Stability: ±0.05 percent for 24 HRS after warm-up.
   k. Temperature rating: 0 to 50 DegC full rated, derated linearly to 40 percent at 70 DegC.
   l. Temperature coefficient: +0.01 percent/DegC maximum.

2.7 VOLTAGE SURGE PROTECTION DEVICES

A. See Section 16491 (Low Voltage Surge Protection Devices (SPD)).

2.8 RUNNING TIME INDICATORS:

A. Acceptable Manufacturers:
1. Eagle Signal Controls.
2. Cramer.
3. Or Approved Equal.

B. Design and Fabrication:
1. Six-digit wheels including a 1/10 digit.
2. Non-reset type.
3. Time range in hours.
4. Automatic recycle at zero.
5. Accuracy: 1 percent.
6. Sealed against dirt and moisture.
7. Tamperproof.

2.9 DIGITAL INDICATOR

A. Design and Fabrication:
   1. Line or 120 VAC powered.
   2. Configurable to read in engineering units.
   3. Four - 1/2 IN high LED or LCD digits with decimal.
   4. Front panel flush mount.

PART 3 EXECUTION

3.1 INSTALLATION

A. Install products in accordance with manufacturer's instructions.
B. Mount control auxiliaries on separate subpanel in control panel.
C. Install end sections and end stops at each end of terminal strip.
D. Install machine-printed terminal markers on both sides of block.
E. Install end sections and end stops at each end of terminal strip.
F. Install machine-printed terminal markers on both sides of block.

END OF SECTION

SECTION 13448

CONTROL PLANELS AND ENCLOSURES

PART 1 GENERAL

1.1 SUMMARY

A. Related Sections:
   1. Section 10405 (Identification, Stenciling, and Tagging Systems).
   2. Section 13441 (Instrumentation for Process Control: Basic Requirements).
   3. Section 13455 (Programmable Logic Controller (PLC) Control System).

1.2 REFERENCES

A.	ASTM A269	Standard Specification for Seamless and Welded Austenitic Stainless Steel Tubing for General Service
B.	NEMA ICS 4	Terminal Blocks for Industrial Use
C.	NEMA ICS 6	Enclosures for Industrial Controls and Systems
D.	NEMA 250	Enclosures for Electrical Equipment (1000 V Maximum)
E.	UL 508	Industrial Control Equipment

1.3 DEFINITIONS

A. Panel: Any control panel or enclosure listed in the schedule included in this Section 13448 (Control Panels and Enclosures).
B. Foreign voltages: Voltages present in circuit even when the panel main power is disconnected.

1.4 SUBMITTALS

A. See Section 13441 (Instrumentation for Process Control: Basic Requirements).
B. Product Data:
   1. Statement of panel wiring methods including wire type, insulation colors, insulation rating, wire sized, wire routing, and wire labeling strategy to be implemented during panel fabrication.
   2. Letter documenting UL 508 capabilities.
   3. Scaled panel face and subpanel face instrument and nameplate layout drawings.
   4. Panel and subpanel materials of construction.
   5. Panel and subpanel dimensions and weights.
   6. Panel access openings.
   7. Conduit and wiring access locations.
   8. Internal wiring and terminal block drawings.
   9. Internal component layout to scale.
   10. Nameplate text.
   11. Total electrical load of panels and enclosures.
C. Shop Drawings:
   1. As-Built Drawings:
      a. Update the control panel drawings and ship at least one copy with the control panel to the Site.
D. Quality Assurance
   1. Obtain approved control panel layouts prior to installation of conduit feeds
   2. Provide completely matching color tones for any individual color specified.

3. Provide panel with the required NEMA rating per NEMA Publication No. 250 to meet classifications indicated or specified.
4. Approved supplier of Industrial Control Equipment under provisions of UL 508. Entire assembly shall be affixed with a UL 508 label "Listed Enclosed Industrial Control Panel" prior to shipment to the jobsite. Any control panel which arrives to the Site without an UL 508 label shall be rejected and sent back to the panel shop.

E. Installation, Operation, and Maintenance Manual:
1. Control panel and all control devices in panel.

1.5 MAINTENANCE

A. Extra Materials:
1. Replacement Bulbs. Provide minimum 25 percent for replacement indicating light bulbs for each type of indicator furnished in this Project.

B. Paint Touch-Up Kit: Provide for field repair of coating damaged during shipment and installation.

PART 2 PRODUCTS

2.1 MANUFACTURERS

A. Subject to compliance with the Contract Documents, the following manufacturers are acceptable:
1. Enclosures:
a. Hoffman Engineering Co.
b. Circle AW.
c. Or Approved Equal.

2.2 MATERIALS

A. Front Panel, Subpanel or Front Door: Steel or stainless steel as required.
B. Frame and Bottom Angles: Steel or stainless steel as required.
C. Top, Sides, Back, Sides, and Back Door: Steel or stainless steel as required.
D. Hinges: Stainless steel.
E. Nameplates: Phenolic.

2.3 ACCESSORIES

A. Panel Nameplates and Identification:
1. See Section 10405 (Identification, Stenciling, and Tagging Systems).

2.4 FABRICATION

A. General:
1. Fabricate panels with instrument arrangements as indicated.
2. Prime control panels with rust inhibitive shop applied primer and paint with two coats of ANSI 61 gray.
3. Finish interior of panel with epoxy glass white.
4. Provide control panel which meets the following requirements:
a. Enclosure sheet metal thickness per UL 508, subpart 7.3.
b. Bonding for continuity of grounding per UL 508, subpart 7.6.
c. Enclosure openings per UL 508, subparts 7.8 through 7.11.
d. Observation windows, if utilized, per UL 508, subpart 7.12.
e. Constructed in accordance with NEMA type per UL 508, subpart 7.15.

f. Corrosion protected per UL 508, subpart 8.
g. Tapped holes for conduit in a cast metal enclosure per UL 508, subpart 27.3
h. Knockouts in sheet-metal enclosure per UL 508, subpart 27.4

5. Provide cautionary markings, if required, in accordance with UL 508, subpart 59.
   a. Locate cautionary markings per UL 508, subparts 59.1, 59.3.
   b. Prefix the cautionary marking with the word "CAUTION" or "WARNING" utilizing letters sized per UL 508, subpart 59.2.
   c. If more than one disconnect switch is required to disconnect all power within a panel or enclosure, provide a cautionary marking with the word "CAUTION" and the following or equivalent, "Risk of Electric Shock-More than one disconnect switch required to de-energize the equipment before servicing."
      1) Locate the cautionary marking on the outside of the equipment or on a stationary fixed, nonremovable part inside the equipment where easily and clearly seen.

B. Free-Standing Panels:
1. Welded construction.
2. Completely enclosed, self-supporting, and gasketed dusttight.
3. Edges turned back minimum of 2 IN.
4. Seams and corners welded and ground smooth to touch and smooth in visual appearance.
5. Provide full length flush pan doors.
6. Provide full length piano hinges rated for 1.5 times door plus instrument weight.
7. Provide doors with keyed alike locking handles and three point catch.
8. Provide appropriate conduit, wiring, and instrument openings in accordance with best panel design.
9. After cutouts have been made, finish opening edges to smooth and true surface condition.
10. Provide each panel with lifting eyebolts. Furnish hot-dipped galvanized steel base channels.
11. Slotted bolt holes in base, 1 1/2 long for field adjustment.

C. Wall Mounted Panels:
1. Seams continuously welded and ground smooth.
2. Rolled lip around all sides of enclosure door opening.
3. Gasketed dust tight.
4. Three-point latching mechanism operated by oil tight key-locking handle.
5. Key doors alike.
6. Continuous heavy GA hinge pin on doors.
   a. Hinges rated for 1.5 times door plus instrument weight.
7. After cutouts have been made, finish opening edges to smooth and true surface condition.
8. Front full opening door.
9. Brackets for wall mounting.

D. Panel Front Construction:
1. Welded construction.
2. Edges turned and ground smooth to touch and visual appearance.
3. At joints where panel face meets side walls, provide dustproof sponge rubber gasket entire height and face.
4. Use full length piano hinges rated for 1.5 times door weight for panel access door.
5. Equip doors with locking devices and handle and three point catches.

6. Finish all instrument cutouts smooth and true.

E. Panel Wiring and Piping:
1. See Section 13455 (Programmable Logic Controller (PLC) Control System) for PLC/field terminal wiring. Wire all PLC I/O points to terminal blocks, including all spare points.
2. Factory wire panels to identified terminal blocks equipped with screw type lugs.
3. Install all wiring without splicing in factory in plastic wire duct:
   a. Do not exceed manufacturer's recommended fill limits.
   b. Size raceways per NEC Article 362.
   c. Ducts shall have removable covers.
4. Splicing and tapping of wires allowed only at terminal blocks.
5. Wire bending space shall be in accordance with Tables 307B, C in NEMA ICS 6. Wire bunches to doors shall be secured at each end so that bending or twisting will be around longitudinal axis of wire. Protect bend area with sleeve.
6. Keep AC power lines separate from low-level DC lines, I/O power supply cables, and all I/O rack interconnect cables. Separate by at least 6 IN, except at unavoidable crossover points and at device terminations.
7. Arrange circuits on terminal blocks plus any spare conductors on adjacent terminals.
8. Provide necessary power supplies for control equipment.
9. Equip each panel with a main thermal magnetic circuit breaker. Limit load to maximum of 80 percent of circuit breaker rating.
10. Provide all necessary stabilizing voltage transformers, balancing potentiometers and rectifiers as necessary for specific instrument requirements.
11. Ensure each panel mounted device is bonded or otherwise grounded to panel or panel grounding system by means of locknuts or pressure mounting methods.
    a. Equip panel with grounding terminals.
    b. All sub-panels and hinged doors shall be bonded to ground.
12. Arrange wiring with sufficient clearance for all leads. Arrange wire neatly, cut to proper length, and remove surplus wire.
13. Wiring to subpanels or rotary switches shall be individually bundled and installed with a "flexible loop" of sufficient length to permit the component to be removed from panel for maintenance without disconnecting wiring.
14. AC and DC circuit conductors shall be type MTW stranded copper suitable for operation at 600 V as specified in the NEC. Conductor size shall be as required for load and 16 AWG minimum.
15. Analog signal cables shall be of 600 V, stranded copper, twisted-shielded pairs of 18 AWG minimum. Ground analog cable drain conductors on grounded terminal blocks at one end of the cable only.
16. Use only high precision 250 ohm resistors with 0.25 percent accuracy to convert 4-20 mA analog signals to 1-5 V DC analog signals. Resistor leads shall be landed under terminal clamp by itself and not with any other wires.
17. Analog signals for devices in separate enclosures shall not be wired in series. Loop isolators shall be used where analog signals are transmitted between control enclosures.
18. Identify all wires with plastic sleeve type (heat-shrinkable) wire markers at each end. Markers shall:
    a. Identify circuit numbers.
    b. Identify function and polarity.
19. Provide at least 6 IN of separation between all circuits and intrinsically safe devices and wires.

20. Termination requirements:
    a. Terminal block markings, mechanical characteristics and electrical characteristics shall be in accordance with NEMA ICS 4.
    b. Terminals shall facilitate wire sizes as follows:
        1) 120 V AC applications: Wire size 12 AWG and smaller.
        2) Other: Wire size 14 AWG and smaller.
    c. Provide terminal blocks with continuous marking strip.
    d. Tag each I/O terminal to indicate tag number of the connected device.
    e. Provide terminals for individual termination of each signal shield.
    f. Provide 20 percent excess terminals for future expansion.
    g. Use terminal blocks with bladed switch where control voltages enter or leave the control panel. Bladed terminal block body to be orange where foreign voltages connect to the panel.
    h. Use fused terminal blocks where the control circuit is energizing a solenoid valve or where providing DC power to loop-powered transmitter. Blown fuse indicators to be utilized on all fused terminal blocks.
    i. Install DIN rail along entire terminal strip area to facilitate future expansion.
    j. Utilize busses for DC and AC control voltages within panel. Include space for expansion.
    k. Provide marked field terminal strip for all PLC I/O connections.
21. Wire lugs to be full ring type.

F. Panel Lighting and Power:
1. Receptacles:
    a. Panels less than 4 FT long:
        1) One electrical GRCI outlet.
        2) One incandescent light fixture with switch(es) and separate circuit breakers.
    b. Panels or panel faces greater than 4 FT long:
        1) One electrical GRCI outlet per 6 FT of length.
        2) Continuous fluorescent lighting strip with switches and separate circuit breakers.

G. Environmental Controls:
1. Furnish circulation fans near hot spots where required to prevent temperature from exceeding instrument rating.
    a. Circulation fans shall utilize coil windings which resist the absorption of moisture via impregnating, dipping in, or brushing with varnish, or by other acceptable means.
        1) Film coated coil wires need not have additional treatment to resist moisture absorption.
    b. Circulation fans shall incorporate locked rotor protection per UL 508, subpart 26.
2. Over-temperature switches shall be utilized to provide special cooling if required to maintain operating temperatures within the manufacturer's specified range.
3. Air conditioning applications shall include means of preventing moisture condensation.
4. For panels or control cabinets located outside, or in area classification requiring a NEMA 4 or 4X rating:
    a. Install thermostatically controlled condensation protection heaters in enclosures housing electronic equipment.
5. Each control panel and control station shall be furnished with industrial corrosion inhibitors.

a. The inhibitor contains a chemical that vaporizes and condenses on all surfaces in the enclosure.
b. The amount of inhibitor shall be according to manufacturer recommendation for the size of the enclosure.
c. Inhibitor shall be installed prior to shipment to the Site.

H. Transitent Noise Protection:
1. Each control panel with PLC components shall be furnished with power protection in the form of a surge suppressor followed by an isolation transformer.
2. The control components within the control panel shall be powered from the protected power. The convenience receptacles, lighting, and cooling power need not be from the protected power.

PART 3 EXECUTION

3.1 INSTALLATION

A. Install free-standing panels on concrete pads as indicated.
B. Anchor panel fronts rigidly into wall system with approved anchorage devices.
C. Anchor panels in a manner to prevent the enclosure from racking, which may cause the doors to become misaligned.
D. Anchor all panels in accordance with criteria for applicable seismic zone 4.

3.2 SCHEDULE OF PANELS

A. RTU-R.
1. Construction:
a. Freestanding, NEMA 3R to line up with MCC-R.
b. 36 IN W x 24 IN D x 72 IN H minimum.
c. Back panel inside.
2. Panel outside door.
a. Nameplate.
b. Digital flow indication, FI-001.
c. Digital flow indication, FI-002.
3. Back panel equipment:
a. PLC-R see Section 13455 (Programmable Logic Controller (PLC) Modifications).
b. Light and GFCI outlet.
c. Terminal strips for external connections.
d. 24 VDC loop power supply sized for 4 instruments.
e. Power supply to all equipment.
f. FIT-002.

END OF SECTION

SECTION 13455

PROGRAMMABLE LOGIC CONTROLLER (PLC) MODIFICATIONS

PART 1 GENERAL

1.1 SUMMARY

A. Section Includes:
   1. Programmable logic controller (PLC) modifications, including software, programming, and training.

B. Related Sections:
   1. Section 13441 (Instrumentation for Process Control: Basic Requirements).

1.2 REFERENCES

A. IEEE C37.90.2	Trial-Use Standard Withstand Capability of Relay Systems to Radiated Electromagnetic Interference from Transceivers
B. IEEE C62.41	Recommended Practice on Surge Voltages in Low-Voltage AC Power Circuits
C. NEMA ICS 1	General Standards for Industrial Control and Systems

1.3 SUBMITTALS

A. Shop Drawings:
   1. See Section 13441 (Instrumentation for Process Control: Basic Requirements).
   2. Product technical data including:
      a. Annotated hard copies of PLC software programs.
         1) Submit program for logic in ladder diagram format as used for the specific PLC system.
         2) Annotate program listing to include the following:
            (a) Written description of each rung's function.
            (b) Reference to control loop number for each rung where applicable.
            (c) Reference to instrumentation tag number of I/O devices for each rung where applicable.
         3) Provide written descriptions completely defining all function blocks used in program.
         4) Provide list of all addresses referenced in logic diagram with description of data associated with each address.
      b. Drawings containing the following information to be submitted:
         1) Arrangement drawings for PLC system modifications.
         2) Enclosure internal wiring and terminal blocks.
      c. Catalog cut sheets containing information on PLC components to be submitted as part of this Section 13455 submittals.
   3. Certifications:
      a. Qualifications of programmer(s).

B. Quality Assurance:
   1. Qualifications:
      a. Installation supervisor shall have had experience in overseeing installation and startup of at least three (3) similar installations.
      b. Programmer(s) shall have had experience in programming PLCs for at least two (2) projects of similar size and complexity.

PART 2 PRODUCTS

2.1 EXISTING PRODUCTS

A. Existing PLC is Modicon Quantum 984.

2.2 COMPONENTS

A. Remote Input/Output:
   1. Install remote I/O processor in existing spare slot in Filter Building RTU.
   2. Provide required length of RIO cable, Beldon 3132A or Approved Equal.
   3. Remote I/O:
      a. Power supply.
      b. RIO processor.
      c. 10 slot back plain.
      d. Digital input module, 115VAC input.
      e. Digital output module, relay type.
      f. Analog input module.
      g. Analog output module.
      h. All modules to match existing Filter Building RTU modules.

B. PLC System Software and Programming:
   1. Provide programming to accomplish all control and monitoring requirements of the Drawings and Specifications.
   2. Provide two (2) copies of control logic program on CD with annotations.
   3. IBM compatible software.
   4. Full documentation capability.
      a. Provide description for each rung.
   5. On/off line programming.
   6. Offline simulation prior to download.
   7. Program over network capability.
   8. Two-step commands requiring operator verification prior to deletion of any programming.

2.3 ACCESSORIES

A. Provide all accessories required to upgrade the existing PLC system to accomplish the requirements of the Drawings and Specifications.

PART 3 EXECUTION

3.1 INSTALLATION

A. Install PLC software and check operation.

3.2 FIELD QUALITY CONTROL

A. Employ and pay for services of equipment manufacturer's field service representative(s) to:
   1. Conduct startup of equipment and perform operational checks.
   2. Provide Owner with a written statement that manufacturer's equipment has been installed properly, started up, and is ready for operation by Owner's personnel.

3.3 DEMONSTRATION

A. Demonstrate system operation.

3.4 INPUT/OUTPUT SCHEDULE: REMOTE I/O BASE, RTU-R

A. Digital Input:
   1. Recirculation Pump, Run.
   2. Recirculation Pump, Auto.
   3. Recirculation Pump, Ready.
   4. Recirculation Pump, Fail.
   5. Acid Feeder, Run.
   6. Aquashade Feeder, Run.
   7. Strainer, Run.
   8. Strainer, Auto.
   9. Strainer, Fail.
   10. Inlet Gate, Open.
   11. Inlet Gate, Closed.
   12. Reservoir Gate, Open.
   13. Reservoir Gate, Closed.

B. Digital Output:
   1. Recirculation Pump, Start-Stop (Future).

C. Analog Input:
   1. FIT-001, Reservoir Inlet Flow.
   2. FIT-002, Recirculation/Watmaugh Flow.
   3. AIT-001, PH, Recirculation/Watmaugh (Future).
   4. PIT-004, Watmaugh Pressure.
   5. LIT-003, Reservoir 5 Level.
   6. Recirculation Pump, Speed.

D. Analog Output:
   1. Acid Feeder, Pacing.
   2. Aquashade Feeder, Pacing.
   3. Recirculation Pump, Speed Set (Future).

END OF SECTION

DIVISION 15

MECHANICAL

SECTION 15061

PIPE AND PIPE FITTINGS: BASIC REQUIREMENTS

PART 1 GENERAL

1.1 SUMMARY

A. Section Includes:
   1. Process piping systems.
   2. Utility piping systems.
   3. Plumbing piping systems.

B. Related Sections:
   1. Section 09905 (Painting and Protective Coatings).
   2. Section 13442 (Primary elements and Transmitters).
   3. Section 15100 (Valves: Basic Requirements).

1.2 REFERENCES

A.	ANSI/AWWA C110/A21.10	Ductile Iron and Gray Iron Fittings, 3 IN through 48 IN for Water and Other Liquids
B.	ANSI/AWWA C151	Ductile-Iron Pipe, Centrifugally Cast In Metal Molds or Sand-Lined Molds for Water or Other Liquids
C.	ANSI/AWWA C153/A21.53	Ductile-Iron Compact Fittings, 3 IN Through 16 IN, for Water and Other Liquids
D.	ASTM C207	Steel Pipe Flanges for Waterworks Service - Sizes 4 IN - 144 IN (100 mm through 3600 mm)
E.	ASTM C900	PVC Pipe and Fabricated Fittings 4 IN Through 12 IN
F.	ASTM C905	PVC Pipe and Fittings 14 IN - 48 IN
G.	ASTM D1785	Standard Specification for Rigid Poly Vinyl Chloride (PVC) Compounds and Chlorinated Poly Vinyl Chloride (CPVC) Compounds
H.	ASTM D2466	Socket Type (PVC) Plastic Pipe Fittings, Schedule 40
I.	ASTM D2467	Socket Type (PVC) Plastic Pipe Fittings, Schedule 80
J.	AWWA C111	Rubber-Gasket Joints for Ductile Iron and Gray Iron Pressure Pipe and Fittings
K.	AWWA C200	Steel Water Pipe 6 IN and Larger
L.	AWWA C207	Standard for Steel Pipe Flanges for Waterworks Service - Sizes 4 IN through 144 IN
M.	AWWA C208	Dimensions for Fabricated Steel Water Pipe Fittings
N.	AWWA C606	Grooved and Shouldered Joints

1.3 SYSTEM DESCRIPTION

A. Piping Systems Organization and Definition:
   1. Piping services are grouped into designated systems according to the chemical and physical properties of the fluid conveyed, system pressure, piping size and system materials of construction.

2. Table A below defines each service classification, its symbol, and the designated system classification number of each service.

TABLE A. PIPING SERVICES		
SYMBOL	SERVICE	SYSTEM
CHEM	Chemical	7
2W	No. 2 Water	10
3W	No. 3 Water	10
OF	Overflow	10
RW	Recycled Water	10
CMP	Culvert Pipe	16

3. See PIPING SPECIFICATION SCHEDULES in PART 3 of this Section 15061.

1.4 SUBMITTALS

A. Product Data:
   1. Acknowledgement that products submitted meet requirements of standards referenced.
   2. Copies of manufacturer's written directions regarding material handling, delivery, storage and installation.
   3. Separate schedule sheet for each piping system scheduled in this Section 15061 showing compliance of all system components. Attach technical product data on gaskets, pipe, fittings, and other components.

B. Shop Drawings:
   1. Fabrication and/or layout drawings:
      a. Exterior yard piping drawings (minimum scale 1 IN equals 10 FT) with information including:
         1) Dimensions of piping lengths.
         2) Invert or centerline elevations of piping crossings.
         3) Acknowledgement of bury depth requirements.
         4) Details of fittings, tapping locations, thrust blocks, restrained joint segments, harnessed joint segments, hydrants, and related appurtenances.
         5) Acknowledge designated valve tag numbers, instrument tag numbers, pipe and line numbers.
         6) Line slopes and vents.
      b. Schedule of interconnections to existing piping and method of connection.

C. Test Reports:
   1. Copies of pressure test results on all piping systems.
   2. Reports defining results of dielectric testing and corrective action taken.
   3. Disinfection test report.
   4. Notification of time and date of piping pressure tests.

1.5 DELIVERY, STORAGE, AND HANDLING

A. Protect pipe coating during handling using methods recommended by manufacturer. Use of bare cables, chains, hooks, metal bars or narrow skids in contact with coated pipe is not permitted.

B. Prevent damage to pipe during transit. Repair abrasions, scars, and blemishes. If repair of satisfactory quality cannot be achieved, as determined by Owner, replace damaged material immediately.

PART 2 PRODUCTS

2.1 MANUFACTURERS

A. Subject to compliance with the Contract Documents, the following manufacturers are acceptable:
   1. Insulating unions:
      a. "Dielectric" by Epco.
   2. Dirt strainers (Y type):
      a. Mueller (#351).
      b. Sarco.
      c. Armstrong.
      d. Or Approved Equal.
   3. Dry disconnect couplings:
      a. Kamlock.
      b. Or Approved Equal.
   4. Dielectric flange kit:
      a. PSI.
      b. Maloney.
      c. Central Plastics.
      d. Or Approved Equal.
   5. Pipe saddles (for gage installation):
      a. Dresser Style 91 (steel and ductile iron systems).
      b. Dresser Style 194 (non-metallic systems).
      c. Or Approved Equal.

2.2 PIPING SPECIFICATION SCHEDULES

A. Piping system materials, fittings and appurtenances are subject to requirements of specific piping specification schedules located at the end of PART 3 of this Section 15061.

2.3 COMPONENTS AND ACCESSORIES

A. Insulating Components:
   1. Dielectric flange kits:
      a. Flat faced.
      b. 1/8 IN thick dielectric gasket, phenolic, non-asbestos.
      c. Suitable for 175 psi, 210 DegF.
      d. 1/32 IN wall thickness bolt sleeves.
      e. 1/8 IN thick phenolic insulating washers.
   2. Dielectric unions:
      a. Screwed end connections.
      b. Rated at 175 psi, 210 DegF.
      c. Provide dielectric gaskets suitable for continuous operation at union rated temperature and pressure.

B. Dirt Strainers:
   1. Y-type.

2. Composition bronze.
3. Rated for test pressure and temperature of system in which they are installed.
4. 20 mesh monel screen.
5. Threaded bronze plug in the blowoff outlet.
6. Threaded NPT end connections.

C. Reducers:
1. Provide appropriate size reducers and reducing fittings to mate pipe to equipment connections. Connection size requirements may change from those indicated depending on equipment furnished.

D. Protective Coating and Lining:
1. Include pipe, fittings, and appurtenances where coatings, linings, paint, tests and other items are specified.
2. Field paint pipe in accordance with Section 09905 (Painting and Protective Coatings).

E. Underground Warning Tape:
1. See Section 10405 (Identification, Stenciling, and Tagging Systems).

F. Pressure Gages:
1. See Section 13442 (Primary Elements and Transmitters).

G. Dry Disconnect Couplings:
1. Adapters:
   a. Male adapters: As indicated.
   b. Adapters:
      1) Female NPT end connection for sludge and flush applications.
      2) Male NPT end connection for chemical applications.
   c. Construct adapters for sludge applications from cast iron or steel.
   d. Construct adapters for chemical and PVC system applications 3 IN and below from polypropylene. Above 3 IN size, provide stainless steel units.
2. Couplers:
   a. Built-in valve and spring loaded poppet which close automatically when disconnected.
   b. Designed to remain with only one arm locked in closed position.
   c. Construct couplers for sludge applications fabricated from material utilized for adapters.
   d. Construct couplers for chemical and PVC system applications 3 IN and less from polypropylene with stainless steel arms and pins. Above 3 IN, provide stainless steel units.
   e. Gasket: Compatible with conveyed liquid.
3. Dust caps: For all adapters.

H. Valves:
1. See schematics and details for definition of manual valves used in each system under 4 IN in size. See Drawings for valve types 4 IN and above and for automatic valves used in each system.
2. See Section 15100 (Valves: Basic Requirements).

PART 3 EXECUTION

3.1 GENERAL

A. All Recycled Water pipe to meet Title 22 requirements for identification/labeling.
B. Coordinate flange dimensions and drillings between piping, valves, and equipment.

3.2 EXTERIOR BURIED PIPING INSTALLATION

A. Unless otherwise indicated, provide a minimum of 42 IN and maximum of 8 FT earth cover over exterior buried piping systems and appurtenances conveying water, fluids, or solutions subject to freezing.
B. Enter and exit through structure walls, floors, and ceilings by using penetrations and seals as indicated.
C. When entering or leaving structures with buried mechanical joint piping, install joint within 2 FT of point where pipe enters or leaves structure. Install second joint not more than 6 FT nor less than 4 FT from first joint.
D. Install expansion devices as necessary to allow expansion and contraction movement.
E. Laying Pipe In Trench:
   1. Excavate and backfill trench as indicated.
   2. Clean each pipe length thoroughly and inspect for compliance to Specifications.
   3. Grade trench bottom and excavate for pipe bell and lay pipe on trench bottom.
   4. Install gasket or joint material according to manufacturer's directions after joints have been thoroughly cleaned and examined.
   5. Except for first two joints, before making final connections of joints, install two full sections of pipe with earth tamped along side of pipe or final with bedding material placed.
   6. Lay pipe in only suitable weather with good trench conditions. Never lay pipe in water except where approved by Owner.
   7. Seal open end of line with watertight plug if pipe laying stopped.
   8. Remove water in trench before removal of plug.
F. Lining Up Push-On Joint Piping:
   1. Lay piping on route lines as indicated.
   2. Deflect from straight alignments or grades by vertical or horizontal curves or offsets.
   3. Observe maximum deflection values stated in manufacturer's written literature.
   4. Provide special bends when specified or where required alignment exceeds allowable deflections stipulated.
   5. Install shorter lengths of pipe in such length and number that angular deflection of any joint, as represented by specified maximum deflection, is not exceeded.
G. Anchorage and Blocking:
   1. Provide reaction blocking, anchors, joint harnesses, or other acceptable means for preventing movement of piping caused by forces in or on buried piping tees, wye branches, plugs, or bends.
   2. Place concrete blocking so that it extends from fitting into solid undisturbed earth wall. Concrete blocks shall not cover pipe joints.
   3. Provide bearing area of concrete in accordance with drawing detail.
H. Install underground warning: See Section 10405 (Identification, Stenciling, and Tagging Systems).
I. Install insulating components where dissimilar metals are joined together.

3.3 EXPOSED EXTERIOR PIPING INSTALLATION

A. Install piping in vertical and horizontal alignment as indicated.
B. Alignment of piping smaller than 4 IN may not be shown. However, install according to Drawing intent and with clearance and allowance for:
   1. Expansion and contraction.
   2. Operation and access to equipment, doors, windows, hoists, moving equipment.

3. Headroom and walking space for working areas and aisles.
4. System drainage and air removal.

C. Enter and exit through structure walls, floor and ceilings using penetrations and seals as indicated.
D. Install vertical piping runs plumb and horizontal piping runs parallel with structure walls.
E. Pipe Support:
1. Use methods of piping support as indicated.
2. Where pipes run parallel and at same elevation or grade, they may be grouped and supported from common trapeze-type hanger, provided hanger rods are increased in size as specified for total supported weight. The pipe in the group requiring the least maximum distance between supports shall set the distance between trapeze hangers.
3. Size pipe supports with consideration to specific gravity of liquid being piped.

F. Locate and size sleeves and castings required for piping system. Arrange for chases, recesses, inserts or anchors at proper elevation and location.
G. Use reducing fittings throughout piping systems. Bushings will not be allowed unless specifically approved.
H. Unions:
1. Install in position which will permit valve or equipment to be removed without dismantling adjacent piping.
2. Mechanical type couplings may serve as unions.
3. Additional flange unions are not required at flanged connections.

I. Install expansion devices as necessary to allow expansion/contraction movement.
J. Provide full face gaskets on all systems.
K. Anchorage and Blocking:
1. Block, anchor, or harness exposed piping subjected to forces in which joints are installed to prevent separation of joints and transmission of stress into equipment or structural components not designed to resist those stresses.

L. Provide insulating components where dissimilar metals are joined together.
M. Instrument Connections:
1. See drawing details.

3.4 CONNECTIONS WITH EXISTING PIPING

A. Where connection between new work and existing work is made, use suitable and proper fittings to suit conditions encountered.
B. Undertake connections in fashion which will disturb system as little as possible.
C. Provide suitable equipment and facilities to dewater, drain, and dispose of liquid removed without damage to adjacent property.
D. Where connections to existing systems necessitate employment of past installation methods not currently part of trade practice, utilize necessary special piping components.

3.5 ACCESS PROVISIONS

A. Provide access doors or panels in walls, floors, and ceilings to permit access to valves, piping and piping appurtenances requiring service.
B. Size of access panels to allow inspection and removal of items served, minimum 10 x 14 IN size.
C. Fabricate door and frame of minimum 14 GA, stretcher leveled stock, cadmium plated or galvanized after fabrication and fitted with screw driver lock of cam type.
D. Provide with key locks, keyed alike, in public use areas.
E. Provide panels with prime coat of paint.

F. Style and type as required for material in which door installed.

3.6 CATHODIC PROTECTION

A. Isolate, dielectrically, all piping from all other metals including reinforcing bars in concrete slabs, other pipe lines, and miscellaneous metal.
B. Make all connections from wire or cable by Thermit Cadwelding accomplished by operators experienced in this process.
C. Install all cables with a loop and overhead knot around each pipe and slack equal to at least 50 percent of the straight line length.
D. After cadwelding, coat all exposed metallic surfaces with hot applied tape.

3.7 FIELD QUALITY CONTROL

A. Pipe Testing - General:
   1. Test piping systems as follows:
      a. Test exposed, non-insulated piping systems upon completion of system.
      b. Test exposed, insulated piping systems upon completion of system but prior to application of insulation.
      c. Test concealed interior piping systems prior to concealment and, if system is insulated, prior to application of insulation.
      d. Test buried piping (insulated and non-insulated) prior to backfilling and, if insulated, prior to application of insulation.
   2. Utilize pressures, media and pressure test durations as specified on Piping Specification Schedules.
   3. Isolate equipment which may be damaged by the specified pressure test conditions.
   4. Perform pressure test using calibrated pressure gages and calibrated volumetric measuring equipment to determine leakage rates.
      a. Select each gage so that the specified test pressure falls within the upper half of the gage's range.
      b. Notify the Owner 24 HRS prior to each test.
   5. Completely assemble and test new piping systems prior to connection to existing pipe systems.
   6. Acknowledge satisfactory performance of tests and inspections in writing to Owner prior to final acceptance.
   7. Bear the cost of all testing and inspecting, locating and remedying of leaks and any necessary retesting and re-examination.
B. Pressure Testing:
   1. Testing medium: Unless otherwise specified in the Piping Specification Schedules, utilize the following test media.
      a. Liquid systems:

PIPE LINE SIZE (DIA)	GRAVITY OR PUMPED	SPECIFIED TEST PRESSURE	TESTING MEDIUM
Up to and including 48 IN	Gravity	25 psig or less	Air or water
All sizes	Pumped	250 psig or less	Water

2. Allowable leakage rates:
   a. All exposed piping systems, all pressure piping systems and all buried, insulated piping systems which are hydrostatically pressure tested shall have zero leakage at the specified test pressure throughout the duration of the test.
   b. For low pressure (less than 25 psig) air testing, the acceptable time for loss of 1 psig of air pressure shall be:

PIPE SIZE (IN DIA)	TIME, MINUTES/100 FT
4	0.3
6	0.7
8	1.2
10	1.5
12	1.8
15	2.1
18	2.4
21	3.0
24	3.6
27	4.2
30	4.8
33	5.4
36	6.0
42	7.3
48	7.6

3. Hydrostatic pressure testing methodology:
   a. General:
      1) All joints, including welds, are to be left exposed for examination during the test.
      2) Provide additional temporary supports for piping systems designed for vapor or gas to support the weight of the test water.
      3) Provide temporary restraints for expansion joints for additional pressure load under test.
      4) Isolate equipment in piping system with rated pressure lower than pipe test pressure.
      5) Do not paint or insulate exposed piping until successful performance of pressure test.
   b. Soil, waste, drain and vent systems:
      1) Test at completion of installation of each stack or section of piping by filling system with water and checking joints and fittings for leaks.
      2) Eliminate leaks before proceeding with work or concealing piping.
      3) Minimum test heights shall be 10 FT above highest stack inlet.
4. Air testing methodology:
   a. General:
      1) Ensure air is ambient temperature.
   b. Low pressure air testing:
      1) Place plugs in line and inflate to 25 psig.
      2) Check pneumatic plugs for proper sealing.
      3) Introduce low pressure air into sealed line segment until air pressure reaches 4 psig greater than ground water that may be over the pipe.

(a) Use test gage conforming to ANSI B40.1 with 0 to 15 psi scale and accuracy of 1 percent of full range.
4) Allow 2 minutes for air pressure to stabilize.
5) After stabilization period (3.5 psig minimum pressure in pipe) discontinue air supply to line segment.
6) Record pressure at beginning and end of test.

C. Dielectric Testing Methods and Criteria:
1. Provide electrical check between metallic non-ferrous pipe or appurtenances and ferrous elements of construction to assure discontinuity has been maintained.
2. Wherever electrical contact is demonstrated by such test, locate the point or points of continuity and correct the condition.

3.8 CLEANING, DISINFECTION AND PURGING

A. Cleaning:
1. Clean interior of piping systems thoroughly before installing.
2. Maintain pipe in clean condition during installation.
3. Before jointing piping, thoroughly clean and wipe joint contact surfaces and then properly dress and make joint.
4. Immediately prior to pressure testing, clean and remove grease, metal cuttings, dirt, or other foreign materials which may have entered the system.
5. At completion of work and prior to Final Acceptance, thoroughly clean work installed under these Specifications. Clean equipment, fixtures, pipe, valves, and fittings of grease, metal cuttings, and sludge which may have accumulated by operation of system, from testing, or from other causes. Repair any stoppage or discoloration or other damage to parts of building, its finish, or furnishings, due to failure to properly clean piping system, without cost to Owner.

3.9 SCHEDULES

A. PIPING SPECIFICATION SCHEDULE - SYSTEM 7
1. General:
a. Piping symbol and service:
1) CHEM - Chemical.
b. Test requirements pressure lines:
1) Test medium: Water.
2) Pressure: 125 psig.
3) Duration: 6 HRS.
2. System components:
a. Pipe size: 12 IN and smaller.
1) Exposed service:
(a) Material: PVC, Type 1, Grade 1, Schedule 80.
(b) Reference: ASTM B1785.
(c) Lining: None.
(d) Coating: Paint.
(e) Fittings: Solvent welded socket type complying with ASTM D2467.
(f) Joints: Solvent welded with unions at valves, penetrations through structures and equipment connections for pipe 2 IN and less and flanges at those locations for pipe above 2 IN.
2) Buried service:
(a) Material: PVC, Type 1, Grade 1, Schedule 80.

(b) Reference: ASTM D1785.
(c) Lining: None.
(d) Coating: None.
(e) Coating: None.
(f) Fittings: Solvent welded socket type complying with ASTM D2466.
(g) Joints: Solvent welded.

B. PIPING SPECIFICATION SCHEDULE - SYSTEM 10
1. General:
a. Piping symbol and service:
1) 2W - No. 2 Water.
2) 3W - No. 3 Water.
3) RW - Recycled Water.
4) OF - Overflow.
b. Test requirements:
1) Test medium: Water.
2) Pressure: 150 psig.
3) Duration: 6 HRS.
c. Gaskets and O-rings:
1) O-rings: Neoprene or rubber.
2) Flanged, push-on and mechanical joints (ductile iron): Rubber, AWWA C111.
3) Flanged joints (steel): Rubber, ANSI C207.
4) Grooved coupling joints (ductile and steel): Rubber, AWWA C606.
2. System components:
a. Pipe size: Smaller than 3 IN.
1) Exposed service:
(a) Material: PVC, Type 1, Grade 1, Schedule 80.
(b) Reference: ASTM D1785.
(c) Lining: None.
(d) Coating: Paint.
(e) Fittings: Solvent welded socket type complying with ASTM D2467.
(f) Joints: Solvent welded with unions at valves, penetrations through structures and equipment connections for pipe 2 IN and less and flanges at those locations for pipe above 2 IN.
2) Buried service:
(a) Material: PVC, Type 1, Grade 1, Schedule 80.
(b) Reference: ASTM D1785.
(c) Lining: None.
(d) Coating: None.
(e) Fittings: Solvent welded socket type complying with ASTM D2466.
(f) Joints: Solvent welded.
3. System components:
a. Pipe size: 3 through 24 IN.
1) Exposed service and piping under reservoir:
(a) Option 1:
(i) Material: Ductile iron, Class 150 if flanged. If grooved type joint system, use pipe thickness per AWWA C606. With both systems, provide screwed on flanges at equipment, valves and structural penetrations.
(ii) Reference: ANSI C115.

(iii) Lining: Cement.
(iv) Coating: Paint.
(v) Fittings: Either ANSI C110 ductile or gray iron.
Joints: Flanged or grooved type mechanical coupling (AWWA C606) joints. With both systems, provide screwed-on flanges at valves, equipment, and structure penetration.

(b) Option 2:
(i) Material: Steel, fabricated pipe.
(ii) Reference: AWWA C200.
(iii) Lining: Fusion bonded epoxy.
(iv) Coating: Fusion bonded epoxy.
(v) Fittings: AWWA C208.
(vi) Joints: Butt-welded with rigid ANSI C207 flanges at valves and structure penetrations.

2) Buried service:
(a) Option 1: (Required for pipe under reservoir embankment.)
(i) Materials: Ductile iron, Class 150.
(ii) Reference: ANSI C151.
(iii) Lining: Cement.
(iv) Coating: Bituminous with polyethylene encasement.
(v) Fittings: Either ANSI C110 ductile or gray iron. Optional ANSI C153 ductile iron compact fittings for sizes 3 to 16 IN.
(vi) Joints: Push-on with mechanical (stuffing box type) joints at fittings and flanged joints at valves. Restrain all joints per the following table.

Length of Restrained Joints:	
DEGREE OF BEND	REQUIRED ON EACH SIDE OF BEND
0-11-1/4 Degrees	20 FT
11 3/8-22 1/2 Degrees	40 FT
22 5/8-45 Degrees	75 FT
45 1/8-90 Degrees	180 FT

(b) Option 2:
(i) Material: PVC C900, Class 150 or PVC C905 Class 165.
(ii) Reference: AWWA C900
(iii) Lining: None.
(iv) Coating: None.
(v) Color: Recycled Purple.
(vi) Fittings: Either ANSI C110 ductile or gray iron. Optional ANSI C153 ductile iron compact fittings for sizes 3 to 16 IN.

(vii)Joints: Push-on with mechanical (stuffing box type) joints at fittings and flanged joints at valves. Restrain all joints per the following table.

Length of Restrained Joints:	
DEGREE OF BEND	REQUIRED ON EACH SIDE OF BEND
0-11-1/4 Degrees	20 FT
11 3/8-22 1/2 Degrees	40 FT
22 5/8-45 Degrees	75 FT
45 1/8-90 Degrees	180 FT

4. Install drain tees with capped nipples of IPS brass 3 IN long at low points. If low point occurs in concealed piping, provide approved flush access panel. These drains are not indicated.
5. Slope water lines down to drain points not less than 1 IN in 60 FT.
6. Install all threaded piping with clean-cut tapered threads and with ends thoroughly reamed after cutting to remove burrs. Pipe joint cement permitted only on external threads.
7. For screwed nipples for connections to flush valves, lavatory supplies, and other equipment with threaded connections use iron, copper, or brass pipe.
8. Install ball, butterfly and plug valves where indicated or required to adequately service all parts of system and equipment.
   a. Install valves on each branch serving restroom.
   b. Install valves on inlet and outlet connections of heat exchangers and on other equipment connected to water lines.
9. Install unions between valves and connections to each piece of equipment, and install sufficient number of unions throughout piping system to facilitate installation and servicing. On copper pipe lines, install wrought, solder-joint, copper to copper unions for lines 2 IN and smaller and, for lines 2-1/2 IN and over install brass flange unions.
10. Where exposed pipes 6 IN in size and smaller pass through floors, finished walls, or finished ceilings, fit with nickel or chrome-plated plates large enough to completely close hole around pipes. Secure plates to pipe by set screw in approved manner.
11. Size supply branches to individual fixtures as scheduled or indicated on Drawings.
12. Install piping so as to be free to expand with proper loops, anchors and joints without injury to system or structure.
13. Provide branches to wall hydrants or hose bibbs in exterior locations with interior shutoff and drain valves.
14. Provide approved type vacuum breaker and backflow preventer installations indicated or as required by Code.
15. Install concealed in finished structures such as administration and office facilities and at locations as indicated.

C. PIPING SPECIFICATION SCHEDULE - SYSTEM 16
   1. General:
      a. Piping symbol and service:
         1) CMP - Culvert Pipe.
      b. Test requirements:
         1) Test medium: Visual.
         2) Pressure: None.

3) Duration: None.

c. Gaskets:

1) 8 IN wide neoprene gasket under connecting band.

2. System components:

a. Pipe size through 120 IN:

1) Buried service.

(a) Material: Corrugated galvanized metal, 0.109 IN thick sheet.

(b) Reference: AASHTO M36.

(c) Lining: Bituminous, AASHTO M190, Type A.

(d) Coating: Bituminous, AASHTO M190, Type A.

(e) Joints:

(i) Bolted connecting band with ½-IN bolts.

(ii) Band to be corrugated galvanized metal, 16 GA.

END OF SECTION

SECTION 15062

PIPE: STEEL

PART 1 GENERAL

1.1 SUMMARY

A. Section Includes:
   1. Steel pipe, fittings, and appurtenances.
B. Related Sections:
   1. Section 15061 (Pipe and Pipe Fittings: Basic Requirements).

1.2 REFERENCES

A.	ANSI B1.1	Unified Inch Screw Threads (UN and UNR Thread Form)
B.	ANSI B2.1	Gages and Gaging for Unified Inch Screw Threads
C.	ANSI B16.3	Malleable Iron Threaded Fittings
D.	ANSI B16.5	Pipe Flanges and Flanged Fittings
E.	ANSI B16.9	Factory-Made Wrought Steel Butt-Welding Fittings
F.	ANSI B16.11	Forged Steel Fittings, Socket Welding and Threaded
G.	ANSI B31.1	Power Piping
H.	ANSI B31.3	Chemical Plant and Petroleum Refinery Piping
I.	ANSI B31.9	Building Services Piping
J.	ASTM A36	Standard Specification for Carbon Structural Steel
K.	ASTM A53	Standard Specification for Pipe, Steel, Black and Hot-Dipped, Zinc-Coated Welded and Seamless
L.	ASTM A181	Standard Specification for Forgings, Carbon Steel, for General-Purpose Piping
M.	ASTM A234	Standard Specification for Pipe Fittings of Wrought Carbon Steel and Alloy Steel for Moderate and Elevated Temperatures
N.	ASTM A283	Low and Intermediate Tensile Strength Carbon Steel Plates
O.	ASTM A570	Standard Specification for Steel, Sheet and Strip, Carbon, Hot-Rolled, Structural Quality
P.	ASTM A572	Standard Specification for High-Strength Low-Alloy Columbium-Vanadium Structural Steel
Q.	ASTM B695	Standard Specification for Coatings of Zinc Mechanically Deposited on Iron and Steel
R.	AWWA C200	Steel Water Pipe 6 IN and Larger
S.	AWWA C203	Coat Tar Protective Coatings and Linings for Steel water Pipeline - Enamel and Tape - Hot Applied
T.	AWWA C206	Field Welding of Steel Water Pipe
U.	AWWA C207	Steel Pipe Flanges for Waterworks Service, Sizes 4 IN through 144 IN
V.	AWWA C208	Dimensions for Fabricated Steel Water Pipe Fittings
W.	AWWA C213	Fusion Bonded Epoxy Coating for the Interior and Exterior of Steel Water Pipelines
X.	AWWA C606	Grooved and Shouldered Joints
Y.	AWWA Manual M11	Steel Pipe - A Guide for Design and Installation

Z. Military Specifications Plating, Cadmium Electro Deposited
QQ-P-416F

1.3 SUBMITTALS

A. Shop Drawings:
1. See Section 15061 (Pipe and Pipe Fittings: Basic Requirements).
2. Factory test reports.
3. If mechanical grooved type coupling system is used, submit piping, fittings, and appurtenant items which will be utilized.
4. Coating manufacturer's qualifications.
5. Welders certificates.

B. Quality Assurance:
1. Qualifications:
a. Application of lining and coating materials including preparation of surfaces, priming, and lining and coating of pipe, fittings, and specials, in shop, repairs of any damage to lining or coating occurring during shipment or any other time, and field lining and coating of ends where linings or coatings have been held back for welded field joints, shall be done by established and recognized pipe company acceptable to Owner.
b. Use only certified welders meeting procedures and performance outlined in Section 9 of the ASME, Section 3.3.3 of AWWA C200.

PART 2 PRODUCTS

2.1 MANUFACTURERS

A. Subject to compliance with the Contract Documents, the following manufacturers are acceptable:
1. Flanged adaptors:
a. Smith-Blair (Style 913 (steel)).
b. Dresser (Style 128 (steel)).
c. Or Approved Equal.
2. Insulating couplings:
a. Smith-Blair (Style 416).
b. Dresser (Style 39).
c. Or Approved Equal.
3. Reducing couplings:
a. Smith-Blair (Style 415).
b. Dresser (Style 62).
c. Or Approved Equal.
4. Transition coupling:
a. Smith-Blair (Style 413).
b. Dresser (Style 62).
c. Or Approved Equal.
5. Compression sleeve coupling:
a. Smith-Blair (Style 411 (steel)).
b. Dresser (Style 38 (steel)).
c. Or Approved Equal.

6. Mechanical couplings and fittings:
   a. Victaulic (Style 07 or 77).
   b. S.P. Fittings.
   c. Or Approved Equal.
7. Factory-applied plastic or epoxy coatings:
   a. "Encoat" Division of Energy Coating Company.
   b. "Scotchkote" Division of 3M Company.
   c. Or Approved Equal.

2.2 MATERIALS

A. All materials used in steel piping systems defined in Section 15061 (Pipe and Pipe Fittings: Basic Requirements), shall meet or exceed pressure test requirements specified for each respective system.
B. Steel Pipe (Fabricated Type):
   1. AWWA C200:
      a. ASTM A36, Grade C Steel Plate.
      b. ASTM A283, Grade D Steel Plate.
      c. ASTM A570, Steel Sheet.
      d. ASTM A572, Steel Plate.
C. Steel Pipe (Mill Type):
   1. ASTM A53, Type E or S.
D. Fittings (For Fabricated Pipe):
   1. AWWA C208.
E. Fittings (For Mill Type Pipe):
   1. ASTM A234.
   2. ANSI B16.3.
   3. ANSI B16.5.
   4. ANSI B16.9.
   5. ANSI B16.11.
F. Flanges (Fabricated Pipe):
   1. Flange material: ASTM A283, Grade C or D, ASTM A181 Grade 1.
   2. Flange finish: Flat faced.
G. Flanges (Mill Type Pipe):
   1. ANSI B16.5.
   2. Flat faced.
   3. Slip-on flanges.
H. Nuts and Bolts:
   1. Buried: Cadmium-plated meeting Military Specification QQP416F, Type 1, Class 2 (Cor-Ten) for buried application. Exposed: Mechanical galvanized ASTM B695, Class 40.
   2. Heads and dimensions per ANSI B1.1.
   3. Threaded per ANSI B1.1.
   4. Project ends 1/4 to 1/2 IN beyond nuts.
I. Gaskets: See individual piping systems in Section 15061 (Pipe and Pipe Fittings: Basic Requirements).

2.3 MANUFACTURED UNITS

A. Couplings:
   1. Flanged adaptors:
      a. Steel or carbon steel body sleeve, flange, followers and Grade 30 rubber gaskets.

b. Flanges meeting standards of adjoining flanges.
c. Entire assembly to be rated for test pressure specified on Piping Schedule for each respective application.

2. Compression sleeve coupling:
   a. Steel sleeve, followers Grade 30 and rubber gaskets.
   b. Flanges meeting standards of adjoining flanges.
   c. Entire assembly to be rated for test pressure specified on Piping Schedule for each respective application.
   d. Provide field coating for buried couplings per AWWA C203.
3. Mechanical coupling joint:
   a. Use of mechanical grooved (AWWA C606) type couplings and fittings in lieu of flanged joints is acceptable where specifically specified in Section 15061 (Pipe and Pipe Fittings: Basic Requirements).

2.4 FABRICATION

A. Provide piping (mill or fabricated) for use in this Project with minimum wall thicknesses as follows:
   1. 1/8 - 5 IN DIA pipe: Schedule 40.
   2. 6 - 10 IN DIA pipe: 3/16 IN.
   3. 12 - 14 IN DIA pipe: 7/32 IN.
   4. 16 - 48 IN DIA pipe: 1/4 IN.
   5. Sizes through 24 IN are nominal OD. Sizes greater than 24 are ID.
   6. Wall thicknesses indicated are for standard weight pipe. Design pipe in accordance with operating pressures shown in Piping Schedules for a design stress limited to 50 percent of yield.
B. Furnish cast parts with lacquer finish compatible with finish coating.
C. Furnish without outside coating of bituminous material any exposed pipe scheduled to be painted.
D. Fabricated Fittings:
   1. AWWA C208.
   2. Ensure ratio of radius of bend to diameter of pipe equal to or greater than 1.0.
E. Taper cement mortar linings as required for valve interfacing.
F. Protective Coatings and Linings:
   1. Fusion bonded epoxy lined and coated in accordance with AWWA C213.
   2. Fusion bonded epoxy lining and coating required on all fittings.
   3. No field cutting and repair of fusion bonded epoxy lined and coated steel pipe is allowed.

2.5 SOURCE QUALITY CONTROL

A. Testing:
   1. Shop hydrostatic test fabricated steel pipe and fittings.
   2. Field hydrostatic test all pipe as specified in Section 15061 (Pipe and Pipe Fittings: Basic Requirements).

PART 3 EXECUTION

3.1 INSTALLATION

A. Install products in accordance with manufacturer's instructions.

B. Joining Methods - Flanges:
   1. Facing method:
      a. Insert slip-on flange on pipe.
      b. Ensure maximum tolerances for flange faces from normal with respect to axis of pipe is 0.005 IN per foot of flange diameter.
      c. Test flanges after welding to pipe for true to face condition and reface, if necessary, to bring to specified tolerance.
   2. Joining method:
      a. Leave 1/8 to 3/8 IN of flange bolts projecting beyond face of nut after tightening.
      b. Coordinate dimensions and drillings of flanges with flanges for valves, reservoir, and other interconnecting piping systems.
      c. When bolting flange joints, exercise extreme care to assure that there is no restraint on opposite end of pipe or fitting which would prevent uniform gasket compression or cause unnecessary stress, bending or torsional strains being applied to cast flanges or flanged fittings. Allow one flange free movement in any direction while bolts are being tightened.
      d. Do not assemble adjoining flexible coupled, mechanical coupled or welded joints until flanged joints in piping system have been tightened.
      e. Gradually tighten flange bolts uniformly to permit even gasket compression.
      f. Do not overstress bolts to compensate for poor installation.

C. Joining Method - Welded Joints:
   1. Perform welding in accordance with AWWA C206 and this Section 15062.
   2. For flange attachment perform in accordance with AWWA C207.
   3. Have each welding operator affix an assigned symbol to all his welds. Mark each longitudinal joint at the extent of each operator's welding. Mark each circumferential joint, nozzle, or other weld into places 180 degrees apart.
   4. Welding for all process piping shall conform with ANSI B31.3. Welding of utility piping 125 psi and less shall be welded per ANSI B31.9. Utility piping above 125 psi shall conform to ANSI B31.1.
   5. Provide caps, tees, elbows, reducers, etc. manufactured for welded applications.
   6. Weldolets may be used for 5 IN and larger pipe provided all slag is removed from inside the pipe.
   7. Weld-in nozzles may be used for branch connections to mains and where approved by Owner.
   8. Use all long radius welding elbows for expansion loops and bends.
   9. Use long radius reducing welding elbows 90 degree bends and size changes are required.

D. Joining Method-Couplings:
   1. Compression sleeve:
      a. Install coupling to allow space of not less than 1/4 IN but not more than 1 IN.
      b. Provide harnessed joint. Use joint harness arrangements detailed in AWWA M11.
      c. Design harness assembly with adequate number of tie rods for test pressures indicated in Section 15061 (Pipe and Pipe Fittings: Basic Requirements) and allow for expansion of pipe.
      d. Provide ends to be joined or fitted with compression sleeve couplings of the plain end type.
      e. Grind smooth welds the length of one coupling on either side of joint to be fitted with any coupling.

f. Ensure that outside diameter and out-of-round tolerances are within limits required by coupling manufacturer.

2. Mechanical coupling:
   a. Arrange piping so that pipe ends are in full contact.
   b. Groove and shoulder ends of piping in accordance with manufacturer's recommendations.
   c. Provide coupling and grooving technique assuring a connection which passes pressure testing requirements.

E. Joining Method-Threaded and Coupled (T/C):
1. Provide T/C end conditions that meet ANSI B2.1 requirements.
2. Furnish pipe with factory-made T/C ends.
3. Field cut additional threads full and clean with sharp dies.
4. Leave not more than three pipe threads exposed at each branch connection.
5. Ream ends of pipe after threading and before assembly to remove burrs.
6. Use teflon thread tape on male thread in mating joints.

F. Support exposed piping in accordance with Section 15061 (Pipe and Pipe Fittings: Basic Requirements).

G. Install buried piping per Section 15061 (Pipe and Pipe Fittings: Basic Requirements).

3.2 FIELD QUALITY CONTROL

A. Test piping systems in accordance with Section 15061 (Pipe and Pipe Fittings: Basic Requirements).

END OF SECTION

SECTION 15063

PIPE: DUCTILE IRON

PART 1 GENERAL

1.1 SUMMARY

A. Section Includes:
   1. Ductile iron piping, fittings, and appurtenances.
B. Related Sections:
   1. Section 15061 (Pipe and Pipe Fittings: Basic Requirements).

1.2 REFERENCES

A.	ANSI B1.1	Standard for Unified Coarse Thread
B.	ASTM B265	Standard Specification for Titanium and Titanium Alloy Strip, Sheet, and Plate
C.	ASTM B695	Standard Specification for Coatings of Zinc Mechanically Deposited on Iron and Steel
D.	ASTM C104	Cement-Mortar Lining for Ductile-Iron Pipe and Fittings
E.	AWWA C105	Polyethylene Encasement for Ductile-Iron Pipe Systems
F.	AWWA C110	Standard for Ductile-Iron and Gray-Iron Fittings
G.	AWWA C111	Rubber-Gasket Joints for Ductile-Iron Pressure Pipe and Fittings
H.	AWWA C115	Flanged Ductile Iron Pipe with Ductile-Iron or Gray-Iron Threaded Flanges
I.	AWWA C150	Standard for Thickness Design of Ductile-Iron Pipe
J.	AWWA C151	Standard for Ductile-Iron Pipe, Centrifugally Cast
K.	AWWA C203	Coal-Tar Protective Coatings and Linings for Steel Water Pipelines--Enamel and Tape--Hot-Applied
L.	AWWA C606	Grooved and Shouldered Joints
M.	Military Specification QQ-P-416F	Plating, Cadmium Electro Deposited

1.3 SUBMITTALS

A. Shop Drawings:
   1. See Section 15062 (Pipe and Pipe Fittings: Basic Requirements).
   2. Certification of factory hydrostatic testing.
   3. If mechanical coupling system is used, submit piping, fittings, and appurtenant items which will be utilized to meet system requirements.

PART 2 PRODUCTS

2.1 MANUFACTURERS

A. Subject to compliance with the Contract Documents the following manufacturers are acceptable:
   1. Flanged adapters:
      a. Smith-Blair (Style 912 (cast)).
      b. Dresser (Style 127 (cast)).

   c. Or Approved Equal.
2. Compression sleeve coupling:
   a. Smith-Blair (Style 441 (cast)).
   b. Dresser (Style 153 (cast)).
   c. Or Approved Equal.
3. Mechanical coupling:
   a. Victaulic (Style 31).
   b. Tyler.
   c. Or Approved Equal.
4. Insulating couplings:
   a. Smith-Blair (Style 416).
   b. Dresser (Style 39).
   c. Or Approved Equal.
5. Reducing couplings:
   a. Smith-Blair (Style 415).
   b. Dresser (Style 62).
   c. Or Approved Equal.
6. Transition coupling:
   a. Smith-Blair (Style 413).
   b. Dresser (Style 62).
   c. Or Approved Equal.
7. Polyethylene encasement tape:
   a. Chase (Chasekote 750).
   b. Kendall (Polyken 900).
   c. 3 M (Scotchrap 50).
   d. Or Approved Equal.
8. Restrained joints:
   a. American (Lock Fast) - 12 IN and below.
   b. US Pipe (TR-Flex) - 4 IN to 54 IN.
   c. American (Lock Fast) - Above 12 IN.
   d. EBAA Iron Inc. (Megalug) - 3 IN - 48 IN.
   e. Or Approved Equal.

2.2 MATERIALS

A. Ductile Iron Pipe:
   1. AWWA C115.
   2. AWWA C150.
   3. AWWA C151.
B. Fittings and Flanges:
   1. AWWA C110.
   2. AWWA C115.
   3. Flanges drilled and faced per ANSI B16.1 for both 125 and 250 psi applications.
C. Nuts and Bolts:
   1. Buried: Cadmium-plated meeting Military Specification QQ-P-416F, Type 1, Class 2 (Cor-Ten) for buried application. Exposed: Mechanical galvanized ASTM B695, Class 40.
   2. Heads and dimensions per ANSI B1.1.
   3. Threaded per ANSI B1.1.

4. Project ends 1/4 to 1/2 IN beyond nuts.

D. Gaskets: See individual piping system requirements in Section 15061 (Pipe and Pipe Fittings: Basic Requirements).

E. If mechanical coupling system is used, utilize pipe thickness and grade in accordance with AWWA C606.

F. Polyethylene Encasement: See AWWA C105.

G. See Piping Schedules in Section 15061 (Pipe and Pipe Fittings: Basic Requirements).

2.3 MANUFACTURED UNITS

A. Couplings:
   1. Flanged adapters:
      a. Unit consisting of steel or carbon steel body sleeve, flange, followers, Grade 30 rubber gaskets.
      b. Supply flanges meeting standards of adjoining flanges.
      c. Rate entire assembly for test pressure specified on piping schedule for each respective application.
   2. Compression sleeve coupling:
      a. Unit consisting of steel sleeve, followers, Grade 30 rubber gaskets.
      b. Supply flanges meeting standards of adjoining flanges.
      c. Entire assembly to be rated for test pressure specified on piping schedule for each respective application.
      d. Provide field coating for buried couplings per AWWA C203.
   3. Mechanical couplings:
      a. Use of mechanical couplings and fittings in lieu of flanged joints is acceptable where specifically specified in Section 15061 (Pipe and Pipe Fittings: Basic Requirements).

2.4 FABRICATION

A. Provide without outside coatings of bituminous material any exposed pipe scheduled to be painted.

B. Furnish cast parts with lacquer finish compatible with finish coat.

2.5 LININGS AND COATINGS

A. Where specified in piping schedule, provide linings and coatings as follows:
   1. Interior coating:
      a. Cement mortar lining per AWWA C104.
   2. Outside coatings:
      a. Buried piping: Bituminous with polyethylene encasement.
      b. Exposed: Paint per Section 09905 (Painting and Protective Coverings).
      c. Provide an outside pipe coating of bituminous material approximately one mil thick except for exposed pipe scheduled to be painted.
         1) Ensure that final coating is continuous and smooth, neither brittle when cold nor sticky when exposed to sunlight, and strongly adherent to pipe at all temperatures.
            (a) Special coatings:
               (i) Provide any exposed pipe scheduled to be painted without outside coatings of bituminous material.
               (ii) Where required, install polyethylene encasement in compliance with ANSI A21.5 (AWWA C105).

2.6 SOURCE QUALITY CONTROL

A. Factory Test:
   1. Subject pipe to hydrostatic test of not less than 500 psi with the pipe under the full test pressure for at least 10 seconds.

PART 3 EXECUTION

3.1 INSTALLATION

A. Joining Method - Push-On Mechanical (Gland-Type) Joints:
   1. Install in accordance with AWWA C111.
   2. Assemble mechanical joints carefully according to manufacturer's recommendations.
   3. If effective sealing is not obtained, disassemble, thoroughly clean, and reassemble the joint.
   4. Do not overstress bolts.
   5. Where piping utilizes mechanical joints with tie rods, align joint holes to permit installation of harness bolts.
B. Joining Method - Push-On Joints:
   1. Install in accordance with AWWA C151.
   2. Assemble push-on joints in accordance with manufacturer's directions.
   3. Bevel and lubricate spigot end of pipe to facilitate assembly without damage to gasket. Use lubricant that is non-toxic, does not support the growth of bacteria, has no deteriorating effects on the gasket material, and imparts no taste or odor to water in pipe.
   4. Ensure the gasket groove is thoroughly clean.
   5. For cold weather installation, warm gasket prior to placement in bell.
   6. Taper of bevel shall be approximately 30 degrees with centerline of pipe and approximately 1/4 IN back.
C. Joining Method - Flanged Joints:
   1. Install in accordance with AWWA C115.
   2. Extend pipe completely through screwed-on flanged and machine flange face and pipe in single operation.
   3. Make flange faces flat and perpendicular to pipe centerline.
   4. When bolting flange joints, exercise extreme care to ensure that there is no restraint on opposite end of pipe or fitting which would prevent uniform gasket compression or would cause unnecessary stress, bending or torsional strains to be applied to cast flanges or flanged fittings.
   5. Allow one flange free movement in any direction while bolts are being tightened.
   6. Do not assemble adjoining flexible joints until flanged joints in piping system have been tightened.
   7. Gradually tighten flange bolts uniformly to permit even gasket compression.
D. Joining Method - Mechanical Coupling Joint:
   1. Arrange piping so that pipe ends are in full contact.
   2. Groove and shoulder ends of piping in accordance with manufacturer's recommendations.
   3. Provide coupling and grooving technique ensuring a connection which passes pressure testing requirements.
E. Flange Adapters 12 IN and Less:
   1. Locate and drill holes for anchor studs after pipe is in place and bolted tight.

2. Drill holes not more than 1/8 IN larger than diameter of stud projection.

F. Cutting:
1. Do not damage interior lining material during cutting.
2. Use abrasive wheel cutters or saws.
3. Make square cuts.
4. Bevel and free cut ends of sharp edges after cutting.

G. Support exposed pipe in accordance with Section 15061 (Pipe and Pipe Fittings: Basic Requirements).

H. Install buried piping in accordance with Sections 15061 (Pipe and Pipe Fittings: Basic Requirements).

I. Install restrained joint systems where specified in Section 15061 (Pipe and Pipe Fittings: Basic Requirements) under specific piping system.

3.2 FIELD QUALITY CONTROL

A. Test piping systems in accordance with Section 15061 (Pipe and Pipe Fittings: Basic Requirements).

END OF SECTION

SECTION 15064

PIPE: PLASTIC

PART 1 GENERAL

1.1 SUMMARY

A. Section Includes:
   1. Plastic pipe.
B. Related Sections:
   1. Section 09905 (Painting and Protective Coatings).
   2. Section 15061 (Pipe and Pipe fittings: Basic Requirements).

1.2 REFERENCES

A.	ASTM D1785	Standard Specification for Poly(Vinyl Chloride) (PVC) Plastic Pipe
B.	ASTM D2241	(PVC) Plastic Pipe (SDR-PR and Class T)
C.	ASTM D2321	Standard Practice for Underground Installation of Thermoplastic Pipe for Sewers and Other Gravity Flow Applications
D.	ASTM D2564	Solvent Cements for (PVC) Plastic Pipe, Tubing, and Fittings
E.	ASTM D2665	(PVC) Plastic Drain, Waste, and Vent Pipe and Fittings
F.	ASTM D3034	Standard Specification for Type PSM Poly(Vinyl Chloride) (PVC) Sewer Pipe and Fittings
G.	ASTM D3139	Standard Specification for Joints for Plastic Pressure Pipes Using Flexible Elastomeric Seals
H.	ASTM D3212	Standard Specification for Joints to Drain and Sewer Plastic Pipes Using Flexible Elastomeric Seals
I.	ASTM F593	Standard Specification for Stainless Steel Bolts, Hex Cap Screws and Studs
J.	ASTM F679	Standard Specification for Poly(Vinyl Chloride) (PVC) Large Diameter Plastic Gravity Sewer Pipe and Fittings
K.	ASTM F794	Standard Specification for Poly(Vinyl Chloride) (PVC) Profile Gravity Sewer Pipe and Fittings Based on Controlled Inside Diameter
L.	AWWA C900	Polyvinyl Chloride (PVC) pressure pipe 4 through 12 IN for Water
M.	AWWA C905	Polyvinyl Chloride (PVC) Water Transmission Pipe, Nominal Diameter 14 IN through 36 IN

1.3 SUBMITTALS

A. See Section 15061 (Pipe and Pipe Fittings: Basic Requirements).
B. Quality Assurance:
   1. See Section 15061 (Pipe and Pipe Fittings: Basic Requirements).

PART 2 PRODUCTS

2.1 PRESSURE PIPING (UNDERGROUND)

A. Acceptable Manufacturers:
   1. Vinyltech.
   2. Diamond Plastics.
   3. Or Approved Equal.

B. Materials: Furnish materials in full compliance with following requirements:
   1. 4-12 IN: AWWA C900 PVC with Pressure Class of 150 psi per Table 2, AWWA C900.
   2. 12-IN – 36-IN: AWWA C905 PVC with Pressure Class of 165 psi.
   3. 1/2 - 3 IN: ASTM D1785 PVC pipe, Type 1, Grade 1 Schedule 80.
   4. Joints for PVC pipe shall be the elastomeric-gasket type with a pressure rating not less than pipe pressure rating meeting performance requirements of ASTM D3139.

C. Installation: Field threading of PVC pipe will not be permitted. Perform installation procedures, handling, thrust blocking, connections, and other appurtenant operations in full compliance to the manufacturer's printed recommendations and in full observance to plan details when more stringent.

D. Uniformity: Ensure that all piping and fittings are integrated into components of the finished system. Utilize products of a single manufacturer.

2.2 PVC DRAINAGE, SEWER PIPING AND UNDERGROUND AIR DUCTS

A. Materials: Furnish materials in full compliance to the following material specification. PVC pipe shall be rigid, unplasticized polyvinyl chloride (PVC) made of PVC plastic having a cell classification of 12454-B or 12454-C as described in specification ASTM D1784. The requirements of this Section 15064 are intended to provide for pipe and fittings suitable for non-pressure drainage of wastewater and surface water. Joining systems shall consist of an elastomeric gasket joint meeting requirements of ASTM D3212.
   1. Supply to Owner all information and sample of joining method for his evaluation. Only jointing methods acceptable to Owner will be permitted.
   2. Provide pipe and fittings meeting or exceeding the following requirements:
      a. 4-27 IN DIA - ASTM D3034 and F679, SDR 35.
      b. 8-30 IN DIA - ASTM F794.
   3. Ensure impact strengths and pipe stiffnesses in full compliance to this Section 15064.

B. Infiltration and Exfiltration: The maximum allowable infiltration measured by test shall not exceed 100 GAL per inch of pipe diameter per mile per 24 HRS. For exfiltration all the pipe and fittings shall exceed performance requirements by an air test procedure as specified in Section 15061 (Pipe and Pipe Fittings: Basic Requirements).
   1. Observe full instructions of Owner for carrying of testing procedures. Perform tests only during presence of Owner.
   2. Should any test on any section of pipe line disclose either infiltration rates greater than allowed or disclose air loss rate greater than that permitted, locate and repair the defective joints or pipes at no cost to Owner and retest until requirements stated are met.

PART 3 EXECUTION

3.1 IDENTIFICATION

A. Identify each length of pipe clearly at intervals of 5 FT or less. Include manufacturer's name and trademark. Nominal size of pipe, appurtenant information regarding polymer cell

classification and critical identifications regarding performance specifications, and "NSF" approvals when applicable.

3.2 INSTALLATION

A. Installation: Install pipe and fittings in accordance with ASTM D2321 and as recommended by the manufacturer.
   1. Provide for a maximum deflection of not more than 5 percent.
B. Deflection: After backfilling, each section of pipe shall be checked for deflection by pulling a mandrel through the pipe. Pipe with deflection exceeding 5 percent of the inside diameter shall have backfill removed and replaced to provide a deflection of less than 5 percent. Any repaired pipe shall be retested.

END OF SECTION

SECTION 15100

VALVES: BASIC REQUIREMENTS

PART 1 GENERAL

1.1 SUMMARY

A. Section Includes:
   1. Valving, actuators, and valving appurtenances.
B. Related Sections:
   1. Section 09905 (Painting and Protective Coatings).
   2. Section 15061 (Pipe and Pipe Fittings: Basic Requirements).

1.2 REFERENCES

A.	ANSI B1.20.1	Pipe Threads, General Purpose
B.	ANSI B16.1	Cast Iron Pipe Flanges and Flanged Fittings
C.	ANSI B16.18	Cast Copper Alloy Solder Joint Pressure Fittings
D.	ANSI B6.34	Valves-Flanged, Threaded and Welding End
E.	AWWA C111	Rubber-Gasket Joints for Ductile Iron and Gray Iron Pressure Pipe and Fittings
F.	AWWA C207	Steel Pipe Flanges for Waterworks Service - Sizes 4 IN through 144 IN
G.	AWWA C500	Gate Valves for Water and Sewerage Systems
H.	AWWA C504	Rubber-Seated Butterfly Valves
I.	AWWA C507	Ball Valves, 6 IN through 48 IN (150 MM through 1200 MM)
J.	AWWA C509	Resilient-Seated Gate Valves 3 through 12 NPS, for Water and Sewage Systems
K.	AWWA C540	Power-Actuating Devices for Valves and Sluice Gates
L.	AWWA C550	Protective Epoxy Interior Coatings for Valves and Hydrants
M.	AWWA C606	Grooved and Shouldered Joints
N.	AWWA D648	Standard Test Method for Deflection Temperature of Plastics Under Flexural Load
O.	ASTM D256	Standard Test Method for Determining the Izod Pendulum Impact Resistance Of Plastics
P.	ASTM D638	Standard Test Method for Tensile Properties of Plastics
Q.	ASTM D648	Standard Test Method for Deflection Temperature of Plastics Under Flexural Load in the Edgewise Position
R.	ASTM D695	Standard Test Method for Compressive Properties of Rigid Plastics
S.	ASTM D2240	Standard Test Method for Rubber Property - Durometer Hardness
T.	MSS	Manufacturers Standardization Society of the Valve and Fittings Industry, Inc.

1.3 DEFINITIONS

A. The following are definitions of abbreviations used in this section or one of the individual valve sections.
   1. CWP: Cold water working pressure.
   2. SWP: Steam working pressure.

3. WOG: Water, oil, gas working pressure.
4. WWP: Water working pressure.

1.4 SUBMITTALS

A. Shop Drawings:
1. Product technical data including:
   a. Acknowledgement that products submitted meet requirements of standards referenced.
   b. Manufacturer's installation instructions.
   c. Valve pressure and temperature rating.
   d. Valve material of construction.
   e. Special linings.
   f. Valve dimensions and weight.
   g. Valve flow coefficient.
   h. Wiring and control diagrams for electric or cylinder actuators.
2. Test reports.

PART 2 PRODUCTS

2.1 MANUFACTURERS

A. Refer to individual valve specification sections.

2.2 MATERIALS

A. Refer to individual valve specification sections.

2.3 VALVE ACTUATORS

A. Valve Actuators - General:
1. Provide actuators as indicated or specified.
2. Counter clockwise opening as viewed from the top.
3. Direction of opening and the word OPEN to be cast in handwheel or valve bonnet.
4. Size actuator to produce required torque with a maximum pull of 80 LB at the maximum pressure rating of the valve provided and withstand without damage a pull of 200 LB on handwheel or chainwheel or 300 foot-pounds torque on the operating nut.
5. Unless otherwise specified, actuators for valves to be buried, submerged or installed in vaults or manholes shall be sealed to withstand at least 20 FT of submergence.
6. Extension Stem:
   a. Install where indicated or specified.
   b. Solid steel with actuator key and nut, diameter not less than stem of valve actuator shaft.
   c. Pin all stem connections.
   d. Center in valve box or grating opening band with guide bushing.

B. Buried Valve Actuators:
1. Provide screw or slide type adjustable cast iron valve box, 5 IN minimum diameter, 3/16 IN minimum thickness, and identifying cast iron cover.
2. Box base to enclose buried valve gear box or bonnet.
3. Provide 2 IN standard actuator nuts complying with Section 3.16 of AWWA C500.
4. Provide at least two teehandle keys for actuator nuts, with 5 FT extension between key and handle.

5. Extension Stem:
   a. Provide for buried valves greater than 4 FT below finish grade.
   b. Extend to within 6 IN of finish grade.
6. Provide concrete pad encasement of valve box as indicated for all buried valves unless otherwise indicated.

C. Plastic Valve Vault:
1. Provide in non traffic areas as indicated.
2. Rectangular shape with snap lock lid.
3. Minimum inside dimension: 9-1/8 IN.
4. Injection molded polyolefin compound with fibrous inorganic component reinforcing with following minimum strength characteristics:

	ASTM Test Criteria
a. Tensile: 3,400 psi	D638
b. Compressive: 3,350 psi	D695
c. Impact Strength, Izod: 0.6 FT LB/IN	D256
d. Durometer Hardness, Type D: 60	D2240
e. Deflection temp @ 66 psi: 230 DegF	D648

5. UV degradation stabilized.
6. Manufacturers:
   a. Ametek Plymouth Products.
   b. Or Approved Equal.

D. Exposed Valve Manual Actuators:
1. Provide for all exposed valves not having electric or cylinder actuators.
2. Provide handwheels for gate and globe valves.
   a. Size handwheels for valves in accordance with AWWA C500.
3. Provide lever actuators for plug valves, butterfly valves and ball valves 3 IN DIA and smaller.
   a. Lever actuators for butterfly valves shall have a minimum of 5 intermediate lock positions between full open and full close.
   b. Provide at least two levers for each type and size of valve furnished.
4. Gear actuators required for plug valves, butterfly valves, and ball valves 4 IN DIA and larger.
5. Provide gearing for gate valves 20 IN and larger in accordance with AWWA C500.
6. Gear actuators to be totally enclosed, permanently lubricated and with sealed bearings.
7. Provide chain actuators for valves 6 FT or higher from finish floor to valve centerline.
   a. Cadmium-plated chain looped to within 3 FT of finish floor.
   b. Equip chain wheels with chain guides to permit rapid operation with reasonable side pull without "gagging" the wheel.
8. Provide cast iron floor stands where indicated. Stands to be furnished by valve manufacturer with actuator.
   a. Stand or actuator to include thrust bearings for valve operation and weight of accessories.

2.4 FABRICATION

A. End Connections:
   1. Provide the type of end connections for valves as required in the Piping Schedules presented in Section 15061 (Pipe and Pipe Fittings: Basic Requirements) or as indicated.
   2. Comply with the following standards:
      a. Threaded: ANSI B1.20.1.
      b. Flanged: ANSI B16.1 Class 125 unless otherwise noted or AWWA C207.
      c. Bell and spigot or mechanical (gland) type: AWWA C111.
      d. Soldered: ANSI B16.18.
      e. Grooved: Rigid joints per Table 5 of AWWA C606.
B. Refer to individual valve sections for specifications of each type of valve on Project.
C. Nuts, Bolts, and Washers:
   1. Wetted or internal to be bronze or stainless steel. Exposed to be zinc or cadmium plated.
D. On Insulated Piping: Provide valves with extended stems to permit proper insulation application without interference from handle.
E. Epoxy Interior Coating:
   1. Provide epoxy interior coating for all ferrous surfaces in accordance with AWWA C550.

PART 3 EXECUTION

3.1 INSTALLATION

A. Install products in accordance with manufacturer's instructions.
B. Painting Requirements:
   1. Comply with Section 09905 (Painting and Protective Coatings).
C. Setting Buried Valves:
   1. Locate valves installed in pipe trenches where buried pipe indicated.
   2. Set valves and valve boxes plumb.
   3. Place valve boxes directly over valves with top of box being brought to surface of finished grade.
   4. Install in closed position.
   5. Place valve on firm footing in trench to prevent settling and excessive strain on connection to pipe.
   6. After installation, backfill up to top of box for a minimum distance of 4 FT on each side of box.
D. Support exposed valves and piping adjacent to valves independently to eliminate pipe loads being transferred to valve and valve loads being transferred to the piping.
E. For threaded valves, provide union on one side within 2 FT of valve to allow valve removal.
F. Install valves accessible for operation, inspection, and maintenance.

3.2 ADJUSTING

A. Adjust valves, actuators and appurtenant equipment. Operate valve, open and close at system pressures.

END OF SECTION

SECTION 15102

GATE VALVES

PART 1 GENERAL

1.1 SUMMARY

A. Section Includes:
   1. Gate valves.
B. Related Sections:
   1. Section 15100 (Valves: Basic Requirements).

1.2 REFERENCES

A.	AWWA C504	Rubber Seated Butterfly Valves
B.	AWWA C509	Resilient-Seated Gate Valves for Water and Sewerage Systems
C.	AWWA C550	Protective Epoxy Interior Castings for Valves and Hydrants
D.	MSS SP-9	Spot Facing for Bronze, Iron and Steel Flanges

1.3 DEFINITIONS

A. OS&Y: Outside Screw and Yoke.
B. NRS: Non-rising Stem.
C. RS: Rising Stem.

1.4 SUBMITTALS

A. Shop Drawings:
   1. See Section 15100 (Valves: Basic Requirements).

PART 2 PRODUCTS

2.1 MANUFACTURERS

A. Subject to compliance with the Contract Documents, the manufacturers listed under the specific valve types are acceptable.
   1. Clow.
   2. Mueller.
   3. American Flow Control.
   4. M & H.
   5. Or Approved Equal.

2.2 VALVES: WATER

A. Resilient Seat Gate Valves Up to 24 IN DIA:
   1. Comply with AWWA C509.
   2. Materials:
      a. Stem and stem nut - bronze.
         1) Wetted bronze parts in low zinc bronze.
         2) Aluminum bronze components: heat treated per AWWA C504.
      b. Body, gate - cast iron.
      c. Resilient seat - Styrene Butadiene Rubber (SBR).

3. Design requirements:
   a. 200 psi working pressure.
   b. Buried - NRS O-ring stem seal.
   c. Exposed - OS&Y, stuffing box stem seal, handwheel.
   d. Counter clockwise open rotation.
4. Fusion bonded epoxy coating interior and exterior except stainless steel and bearing surfaces.
   a. Comply with AWWA C550.
      1) Wetted bronze parts in low zinc bronze.
      2) Aluminum bronze components: heat treated per AWWA C504.

2.3 ACCESSORIES

A. Furnish actuator integral with valve.
B. Refer to Section 15100 (Valves: Basic Requirements) for actuator requirements.

2.4 FABRICATION

A. General:
   1. Provide valves with clear waterways the full diameter of the valve.
B. Spot valves in accordance with MSS SP-9.

PART 3 EXECUTION

3.1 INSTALLATION

A. See Section 15100 (Valves: Basic Requirements).
B. Where larger buried valves utilize smaller bypass valves, provide a second valve box installed over the bypass valve operating nut.
C. Do not install gate valves inverted or with the stems sloped more than 45 degrees from the upright unless the valve was ordered and manufactured specifically for this orientation.

END OF SECTION

SECTION 15103

BUTTERFLY VALVES

PART 1 GENERAL

1.1 SUMMARY

A. Section Includes:
   1. Butterfly valves.
B. Related Sections:
   1. Section 15100 (Valves: Basic Requirements).

1.2 REFERENCES

A.	ANSI B16.5	Pipe Flanges and Flanged Fittings: NPS 1/2 Through 24
B.	ASTM A126	Gray Iron Castings for Valves, Flanges and Pipe Fittings
C.	ASTM A276	Standard Specification for Stainless Steel Bars and Shapes
D.	ASTM A436	Austenitic Gray Iron Castings
E.	ASTM A536	Standard Specification for Ductile Iron Castings
F.	AWWA C504	Rubber Seated Butterfly Valves
G.	MSS SP-67	Butterfly Valves

1.3 SUBMITTALS

A. Shop Drawings:
   1. See Section 15100 (Valves: Basic Requirements).
   2. For valves 8 IN and larger, furnish "Affidavit of Compliance" to Owner in accordance with AWWA C504.

PART 2 PRODUCTS

2.1 MANUFACTURERS

A. Subject to compliance with the Contract Documents, the following manufacturers are acceptable:
   1. DeZurik.
   2. Pratt.
   3. Or Approved Equal.

2.2 BUTTERFLY VALVES (AWWA C504)

A. Comply with AWWA C504.
B. Materials:
   1. Valve bodies:
      a. ASTM A126, Class B or ASTM A536 Grade 65-45-12 ductile iron.
      b. Wafer valves may be constructed of ASTM A48, Class 40 cast iron.
   2. Valve shafts:
      a. Stainless steel, 18-8, Type 304 or 316.
   3. Valve discs:
      a. Potable and nonpotable water:
         1) ASTM A48, Class 40 cast iron. or
         2) ASTM A536, Grade 65-45-12 ductile iron. or
         3) ASTM A436, Type 1 alloy cast iron. or

4) Bronze in accordance with AWWA C504.

4. Valve seats:
   a. Potable and nonpotable water below 150 DegF:
      1) Natural rubber.
   b. Potable and nonpotable water below 180 DegF:
      1) Buna-N.
5. Mating surfaces:
   a. Valves less than 30 IN: ASTM A276, 18-8, stainless steel or bronze.
   b. Valves 30 IN and larger: ASTM A276, 18-8, stainless steel.

C. Design Requirements:
1. Seat type: Resilient. Comply with AWWA C504.
2. Exposed and submerged valves 3 through 20 IN.
   a. Body type: Wafer or short body flange (laying length may vary from AWWA C504).
   b. Equip wafer type with fully tapped anchor lugs drilled per ANSI B16.5.
3. Exposed and submerged valves 24 IN and larger:
   a. Body type: Short body flange.
   b. Working pressure: Rated for 150 psi (Class 150B per AWWA C504).
4. Direct buried valves:
   a. All valves: Working pressure rated for 150 psi (Class 150B per AWWA C504).

2.3 ACCESSORIES

A. Furnish actuator integral with valve.
B. Refer to Section 15100 (Valves: Basic Requirements) for actuator requirements.

PART 3 EXECUTION

3.1 INSTALLATION

A. See Section 15100 (Valves: Basic Requirements).

END OF SECTION

SECTION 15105

GLOBE VALVES

PART 1 GENERAL

1.1 SUMMARY

A. Section Includes:
   1. Globe valves.
B. Related Sections:
   1. Section 15100 (Valves: Basic Requirements)

1.2 REFERENCES

A. MSS SP-85 — Cast Iron Globe and Angle Valves, Flanged and Threaded Ends.

1.3 DEFINITIONS

A. MSS: Manufacturers Standardization Society of the Valve and Fitting Industry Inc.

1.4 SUBMITTALS

A. Shop Drawings:
   1. See Section 15100 (Valves: Basic Requirements).

PART 2 PRODUCTS

2.1 MANUFACTURERS

A. Nibco F-718-B.
B. Or Approved Equal.

2.2 GLOBE VALVE

A. Class 125 iron globe valve.
B. Comply with MSS SP-85.
C. Materials:
   1. Body, bonnet: Cast iron.
   2. Stem: Brass ASTM B16.
   3. Disc: Cast Bronze ASTM B584.
D. Design Requirements:
   1. Bolted bonnet, rising stem, renewable seat and disc, bronze mounted.

PART 3 EXECUTION

3.1 INSTALLATION

A. See Section 15100 (Valves: Basic Requirements).
B. Install globe valves with stem in horizontal position wherever possible.

END OF SECTION

SECTION 15106

CHECK VALVES

PART 1 GENERAL

1.1 SUMMARY

A. Section Includes:
   1. Check valves.

1.2 REFERENCES

A.	ASME B16.1	Gray Iron Pipe Flanges and Flanged Fittings (Classes 25, 125 and 250)
B.	AWWA C508	Standard for Swing-Check Valves for Waterworks Service, 2 IN through 24 IN NPS
C.	MSS SP-71	Cast Iron Swing Check Valves, Flanged and Threaded Ends
D.	MSS SP-80	Bronze Gate, Globe, Angle and Check Valves

1.3 DEFINITIONS

A. PVDF: Polyvinylidene fluoride.

1.4 SUBMITTALS

A. Shop Drawings:
   1. See Section 15100 (Valves: Basic Requirements).

PART 2 PRODUCTS

2.1 MANUFACTURERS

A. Subject to compliance with the Contract Documents, manufacturers listed under the valve with types are acceptable.

2.2 CHECK VALVES: 2.5 IN AND SMALLER

A. Class 125 Bronze Swing Check Valves, Water):
   1. Comply with MSS SP-80.
   2. Acceptable manufacturers:
      a. Nibco T413-Y.
      b. Stockham B-319Y.
      c. Or approved equal.
   3. Materials:
      a. Body, bonnet, disc: Bronze.
   4. Design requirements:
      a. 125 psi steam to 406 DegF, 200 psi WOG.
      b. Horizontal swing, renewable disc.

2.3 SWING CHECK VALVES: 3 IN TO 24 IN

A. Swing Check Valves (Water):
   1. Comply with AWWA C508.
   2. Acceptable manufacturers:
      a. Clow.

b. American Darling.
c. Golden Anderson.
d. Or approved equal.

3. Materials:
   a. Body and cover: Cast iron.
   b. Seat ring, hinge: Bronze.
   c. Disc:
      1) 3 to 4 IN: Bronze.
      2) 6 to 24 IN: Cast iron with bronze face.
      3) 6 to 24 IN: Cast iron with rubber face.
   d. Hinge shaft: Stainless steel.
   e. Bearings, connecting hardware: Bronze.
4. Design requirements:
   a. 175 psi working pressure (3 to 12 IN).
   b. Furnish with outside weight and lever or lever and spring.

PART 3 EXECUTION

3.1 INSTALLATION

A. See Section 15100 (Valves: Basic Requirements).
B. Install in accordance with manufacturer's instructions.

END OF SECTION

SECTION 15114

MISCELLANEOUS VALVES

PART 1 GENERAL

1.1 SUMMARY

A. Section Includes:
   1. Air release and vacuum relief valves.
   2. Pressure reducing/sustaining valves.

1.2 REFERENCES

A.	AGA	American Gas Association
B.	ASME B16.1	Cast Iron Pipe Flanges and Flanged Fittings - Classes 25, 125 and 250
C.	AWWA C512	Standard for Air-Release, Air-Vacuum, and Combination Air Valves for Waterworks Service
D.	AWWA C550	Standard for Protective Interior Coatings for Valves and Hydrants
E.	NEMA 250	Enclosures for Electrical Equipment (1000 Volts Maximum)

1.3 SUBMITTALS

A. Shop Drawings:
   1. See Section 15100 (Valves: Basic Requirements).

PART 2 PRODUCTS

2.1 MANUFACTURERS

A. Subject to compliance with the Contract Documents, the manufacturers listed under the specific valve types are acceptable.

2.2 AIR RELEASE VALVES

A. General:
   1. Conform to AWWA C512.
B. Water:
   1. Air Release Valve:
      a. Acceptable manufacturers:
         1) Vent-O-Mat, Series RBX.
         2) No Substitutions.
      b. Materials:
         1) Body and cover: Cast iron or semi-steel.
         2) Float: HDPE.
         3) Linkage and trim: Bronze or stainless steel.
         4) Flanges: Stainless steel.
      c. Design requirements:
         1) Size: 1 IN.
         2) Working pressure: 350 psi.
         3) Release 10 cfm at 10 psi differential at 150 psi line pressure.

2.3 CONTROL VALVES

A. Pressure Reducing/Sustaining Valve:
   1. Type:
      a. Pressure sustaining valve.
         1) Acceptable manufacturers (model as shown for specific valve):
            (a) CLA-VAL 50-01.
            (b) Or approved equal.
         2) Materials:
            (a) Body: Ductile iron, epoxy lined and coated.
            (b) Internal trim: Bronze.
            (c) Flange pressure class: 150 lb for 250 lb maximum working pressure.
            (d) Tubes and fittings: Stainless steel.
   2. Design requirements:
      a. Size: 4 IN.
      b. Operating pressures:
         1) Inlet maximum: 100 PSI.
         2) Inlet minimum: 20 PSI.
         3) Outlet maximum: 100 PSI.
         4) Outlet minimum: 0 PSI.

2.4 ACCESSORIES

A. Furnish any accessories required to provide a completely operable valve.

2.5 FABRICATION

A. Completely shop assemble unit including any interconnecting piping, speed control valves, control isolation valves and electrical components.
B. Provide internal epoxy coating suitable for potable water for all iron body valves in accordance with AWWA C550.

2.6 SOURCE QUALITY CONTROL

A. Shop hydrostatically test to test pressure.

2.7 MAINTENANCE MATERIALS

A. Provide one (1) set of any special tools or wrenches required for operation or maintenance for each type valve.

PART 3 EXECUTION

3.1 INSTALLATION

A. General: See Section 11005 (Equipment: Basic Requirements) and Section 15100 (Valves: Basic Requirements).
B. Air Release, Vacuum Relief, and Pressure Relief Valves:
   1. Pipe exhaust to a suitable disposal point.
   2. Where exhausted to a trapped floor drain, terminate exhaust line 6 IN minimum above floor.
C. Float-Operated Valves: Install baffle around float to minimize turbulence adjacent to float.

3.2 FIELD QUALITY CONTROL

A. Clean, inspect, and operate valve to ensure all parts are operable and valve seats properly.
B. Check and adjust valves and accessories in accordance with manufacturer's instructions and place into operation.

END OF SECTION

SECTION 15115

WATER CONTROL GATES

PART 1 GENERAL

1.1 SUMMARY

A. Section Includes:
   1. Slide (fabricated) gates.

1.2 REFERENCES

A.	ASTM A108	Standard Specification for Steel Bar, Carbon and Alloy, Cold-Finished
B.	ASTM A276	Standard Specification for Stainless Steel Bars and Shapes
C.	ASTM D4020	Standard Specification for Ultra-High-Molecular-Weight Polyethylene Molding and Extrusion Materials
D.	AWWA C513	Open-Channel Fabricated-Metal Slide Gates

1.3 SUBMITTALS

A. Product Data:
   1. Acknowledgment that products submitted meet the requirements of standards referenced.

PART 2 PRODUCTS

2.1 MANUFACTURERS

A. Subject to compliance with the Contract Documents, the following manufacturers are acceptable:
   1. Water control gates:
      a. Golden Harvest.
      b. Rodney Hunt (Series 600).
      c. Or Approved Equal.

2.2 SLIDE GATES

A. General:
   1. Self-contained slide gates with operators in accordance with the configuration noted in the gate schedule or as indicated.
   2. Galvanized steel oil-seal pipe assembly with oil-fill plug, top and bottom oil-seal packing glands and other necessary appurtenances as indicated to be supplied by the gate manufacturer. Food-grade oil, air vent pipe, and pipe support brackets are to be supplied by the Contractor.
   3. Maximum leakage rate: Not to exceed 0.1 gpm per foot of seat perimeter with water at top of gate slide and operating in seating position.
B. Material:
   1. Slide:
      a. Stainless steel: ASTM A276, Type 316.
   2. Frame, guides, guide rails, cross bars, and head rails:
      a. Stainless steel: ASTM A276, Type 316.

3. Anchor bolts:
   a. Stainless steel: ASTM A276, Type 316.
4. Stems and stem couplings:
   a. Stems and couplings exposed to the elements are to be stainless steel: ASTM A276, Type 316.
   b. Stems and couplings encased in oil-seal pipe assembly are to be either leaded cold rolled steel: ASTM A-108, or stainless steel: ASTM A276, Type 316, as recommended by the gate manufacturer.
   c. Oil-seal pipe: Galvanized steel.

C. Fabrication:
1. Frame and guides:
   a. Rigid, welded gate frame and guides: Composed of the guide rails, cross bars, and headrails, with a clear opening the same size as the waterway, unless otherwise specified. All metal used in the frame and guide assembly shall have a minimum thickness of 1/4 IN.
   b. Ultra High Molecular Weight Polyethylene (UHMWPE), as specified in ASTM D4020, seats upstream and downstream shall form a tight seal between the frame and the slide (disc).
   c. Flatback, spigotback, embedded, or integral flange back type as indicated.
   d. Design guides for maximum rigidity: Weight not less than 9 LBS per foot.
   e. Guides of sufficient length to support two-thirds the height of the slide, when the gate is fully open.
   f. For self-contained gates, extend the head angle or yoke 42 IN above the operating floor.
   g. Provide guides of sufficient strength so that no further reinforcing will be required.
   h. For self-contained gates, design yoke to support the operating device formed by members welded or bolted at the top of the guides.
   i. For self-contained gates, design yoke arrangement such that the disc and stem can be removed without disconnecting yoke.
   j. For self-contained gates, design yoke to support the lift forces when subjected to a load of 80 LB pull on the operator.
   k. For embedded type gates provide molded resilient seat mounted at bottom of disc for flush bottom closure and seal against embedded portion of the frame in the channel invert or have a resilient seat mounted on frame flush at channel invert.
2. Slide (disc):
   a. Plate reinforced slide with structural shapes welded to the plate. All metal used in the slide assembly shall have a minimum thickness of 1/4 IN.
   b. Slide cover maximum deflection: 1/360 of the span of the gate under maximum head.
   c. Extend reinforcing ribs to guides so that the seating surface of the guide is reinforced.
   d. Stem connection of either clevis type, with structural members welded to slide and a bolt to act as pivot pin, or a threaded and bolted (or keyed) thrust nut supported in welded nut pocket.
   e. Pocket and yoke of gate capable of taking at least twice the rated thrust output of the operator at 40 LBS pull. Slide material same as frame and guides.
3. Stem:
   a. Of suitable length and ample strength for the intended service.

b. Stem diameter capable of withstanding twice the rated output of the operator at 40 LB pull, and supported such that L/r ratio for unsupported part of the stem shall not exceed 200.

2.3 GATE OPERATORS AND LIFTS

A. General: Provide lifts in accordance with AWWA C513 or as modified in these Specifications. Provide all lifts with clear butyrate or polycarbonate plastic stem cover with Mylar open-close indicator.

B. Manual Operators:
   1. Centerline of crank or handwheel approximately 36 IN above operating floor. Unless otherwise shown.
   2. Maximum effort of 40 LBS on crank or handwheel shall operate gate after unseating gate from wedges bored upon seating head specified.

2.4 ALL GATES, VALVES, OPERATORS AND LIFTS

A. Provide gates, including lift, designed with a minimum factor of safety of five. Provide rising stems on all gates.

PART 3 EXECUTION

3.1 FIELD QUALITY CONTROL

A. Installation Check and Startup: Employ and pay for services of the equipment manufacturer's field service representative(s) fully commissioned and authorized by manufacturers to do the following:
   1. Inspect equipment covered by these Specifications.
   2. Supervise adjustments, calibrations and installation checks and full commissioning.
   3. Perform basic operational checks.
   4. Provide Owner with a written statement that manufacturer's equipment has been installed properly, lubricated, and calibrated and is ready for operation by the Owner.

B. Field Leakage Test for Slide Gate:
   1. Test gate under design seating head and adjust to maximum leakage of 0.1 gpm per foot of seating perimeter.

3.2 SCHEDULE

A. The following is a schedule of the water control gates required:

ID#	TYPE	SIZE WxH (IN)	SEAT HD-FT	UNSEAT HD-FT	TYPE LIFT	CLOSURE	CONFIGURATION
SG-001	Slide	24x24	20	10	Elec	FB	As indicated
SG-002	Slide	36x36	20	10	Elec	FB	As indicated

Abbreviations:

Conv - Conventional
Dn Op - Downward Opening
Elec - Electric
FB - Flush Bottom
Hdwl - Handwheel
Hyd - Hydraulic
Ped - Pedestal

END OF SECTION

DIVISION 16

ELECTRICAL

SECTION 16010

ELECTRICAL: BASIC REQUIREMENTS

PART 1 GENERAL

1.1 SUMMARY

A. Section Includes:
   1. Basic requirements for electrical systems.
B. Related Sections:
   1. Section 05500 (Metal Fabrications).
   2. Section 16130 (Raceway and Boxes).

1.2 REFERENCES

A.	ASTM A123	Standard Specification for Zinc (Hot-Dip Galvanized) Coatings on Iron and Steel Products
B.	ASTM A153	Standard Specification for Zinc Coating (Hot-Dip) on Iron and Steel Hardware
C.	IEEE C2	National Electrical Safety Code (NESC)
D.	NEMA 250	Enclosures for Electrical Equipment (1000 Volts Maximum)
E.	NFPA 70	National Electrical Code (NEC)

F. Where Underwriters Laboratories, Inc. (UL) test procedures have been established for the product type, use UL or ETL Testing Laboratories (ETL) approved electrical equipment and provide with the UL or ETL label.

1.3 DEFINITIONS

A. For the purposes of providing materials and installing electrical work the following definitions shall be used.
   1. Outdoor area: Exterior locations where the equipment is normally exposed to the weather and including below grade structures.
   2. Non-architecturally finished interior area: Pump, chemical, mechanical, electrical rooms and other similar process type rooms.
   3. Shop fabricated: Manufactured or assembled equipment for which a UL test procedure has not been established.

1.4 SUBMITTALS

A. Shop Drawings:
   1. General requirements:
      a. Provide manufacturer's technical information on products to be used, including product descriptive bulletin.
      b. Include data sheets that include manufacturer's name and product model number.
         1) Clearly identify all optional accessories.
      c. Acknowledgement that products are UL or ETL listed or are constructed utilizing UL or ETL recognized components.
      d. Manufacturer's delivery, storage, handling and installation instructions.
      e. Product installation details.
      f. See individual specification sections for any additional requirements.

1.5 DELIVERY, STORAGE, AND HANDLING

A. Protect equipment from damage.
B. Protect nameplates on electrical equipment to prevent defacing.

1.6 AREA DESIGNATIONS

A. Designation of an area will determine the NEMA rating of the electrical equipment enclosures, types of conduits and installation methods to be used in that area.
   1. Outdoor areas:
      a. Wet.
   2. Indoor areas:
      a. Dry, unless indicated.

PART 2 PRODUCTS

2.1 MANUFACTURERS

A. Subject to compliance with the Contract Documents, refer to specific Division 16 Specification Sections and specific material paragraphs below for acceptable manufacturers.
B. Provide all components of a similar type by one (1) manufacturer.

2.2 MATERIALS

A. Electrical Equipment Support Pedestals and/or Racks:
   1. Approved manufacturers:
      a. Modular strut:
         1) Unistrut Building Systems.
         2) B-Line.
         3) Globe Strut.
         4) Or Approved Equal.
   2. Material requirements:
      a. Modular strut:
         1) Galvanized steel: ASTM A123 or ASTM A153.
         2) Stainless steel: AISI Type 316.
         3) PVC coated galvanized steel: ASTM A123 or ASTM A153 and 20 mil PVC coating.
      b. Mounting hardware:
         1) Galvanized steel.
         2) Stainless steel.
      c. Anchorage per Section 05500 (Metal Fabrications).
B. Field touch-up of galvanized surfaces.
   1. Zinc-rich primer.
      a. One (1) coat, 3.0 mils, ZRC by ZRC Products.

PART 3 EXECUTION

3.1 INSTALLATION

A. Install and wire all equipment, including prepurchased equipment, and perform all tests necessary to assure conformance to the Drawings and Specification Sections and ensure that equipment is ready and safe for energization.

B. Install equipment in accordance with the requirements of:
   1. NFPA 70 (NEC).
   2. IEEE C2.
   3. The manufacturer's instructions.
C. In general, conduit routing is not indicated.
   1. The Contractor is responsible for routing all conduits including those indicated on one-line and control block diagrams and home runs shown on floor plans.
   2. Conduit routings and stub-up locations that are indicated are approximate; exact routing to be as required for equipment furnished and field conditions.
D. Do not use equipment that exceed dimensions or reduce clearances indicated or required by the NFPA 70 (NEC).
E. Install equipment plumb, square and true with construction features and securely fastened.
F. Install electrical equipment, including pull and junction boxes, minimum of 6 IN from process, gas, air and water piping and equipment.
G. Install equipment so it is readily accessible for operation and maintenance, is not blocked or concealed and does not interfere with normal operating and maintenance requirements of other equipment.
H. Provide electrical equipment support system per the following area designations:
   1. Dry areas:
      a. Galvanized system consisting of galvanized steel channels and fittings, nuts and hardware.
      b. Field touch-up cut ends and scratches of galvanized components with the specified primer during the installation, before rust appears.
   2. Wet areas:
      a. Stainless steel system and fasteners.
I. Provide all necessary anchoring devices and supports rated for the equipment load based on dimensions and weights verified from approved submittals, or as recommended by the manufacturer.
   1. Do not cut, or weld to, building structural members.
   2. Do not mount safety switches or other equipment to equipment enclosures, unless enclosure mounting surface is properly braced to accept mounting of external equipment.
J. Screen or seal all openings into equipment mounted outdoors to prevent the entrance of rodents and insects.
K. Identify electrical equipment and components with identification nameplates.

3.2 FIELD QUALITY CONTROL

A. Verify exact rough-in location and dimensions for connection to electrified equipment, provided by others.
B. Replace equipment and systems found inoperative or defective and re-test.
C. Cleaning:
   1. Clean all equipment.
D. The protective coating integrity of support structures and equipment enclosures shall be maintained.
   1. Repair galvanized components utilizing a zinc rich paint.
   2. Repair painted components utilizing touch up paint provided by or approved by the manufacturer.

3. Repair PVC coated components utilizing a patching compound, of the same material as the coating, provided by the manufacturer of the component.
4. Repair surfaces which will be inaccessible after installation prior to installation.
5. See Section 16130 (Raceway and Boxes), for requirements for conduits and associated accessories.

E. Replace nameplates damaged during installation.

3.3 DEMONSTRATION

A. Demonstrate equipment for proper operation.

END OF SECTION

SECTION 16065

GROUNDING

PART 1 GENERAL

1.1 SUMMARY

A. Section Includes:
   1. Material and installation requirements for grounding system(s).
B. Related Sections:
   1. Section 16010 (Electrical).
   2. Section 16125 (Wire and Cable: 600 Volt and Below).
   3. Section 16130 (Raceway and Boxes).

1.2 REFERENCES

A.	ASTM B8	Standard Specification for Concentric-Lay-Stranded Copper Conductors, Hard, Medium-Hard, or Soft
B.	IEEE 837	Standard for Qualifying Permanent Connections Used in Substation Grounding
C.	NFPA 70	National Electrical Code (NEC), Article 250, Grounding and Bonding
D.	UL 467	Grounding and Bonding Equipment

E. Ensure ground continuity is continuous throughout the entire Project.

1.3 SUBMITTALS

A. Product data.
   1. Provide submittal data for all products specified in PART 2 of this Specification Section except:
      a. Grounding clamps, terminals and connectors.
      b. Exothermic welding system.
   2. See Section 16010 (Electrical: Basic Requirements), for additional requirements.
B. Quality Assurance/Control Submittals:
   1. Test Reports:
      a. Report of ground test.

PART 2 PRODUCTS

2.1 MANUFACTURERS

A. Subject to compliance with the Contract Documents, the following manufacturers are acceptable:
   1. Ground rods and bars and grounding clamps, connectors and terminals:
      a. Burndy.
      b. Harger Lightning Protection.
      c. Heary Brothers.
      d. Joslyn.
      e. Robbins Lightning Protection.
      f. Thomas & Betts (Blackburn).
      g. Thompson.

h. Or Approved Equal.
2. Exothermic weld connections:
a. Erico Products Inc., Cadweld.
b. Harger Lightning Protection.
c. Thermoweld.
d. Or Approved Equal.

2.2 COMPONENTS

A. Wire and Cable:
1. Bare conductors: Soft drawn stranded copper meeting ASTM B8.
2. Insulated conductors: Color coded green, per Section 16125 (Wire and Cable: 600 Volt and Below).
B. Conduit: As specified in Section 16130 (Raceway and Boxes).
C. Ground Rods:
1. 3/4 IN x 10 FT.
2. Copperclad:
a. Heavy uniform coating of electrolytic copper molecularly bonded to a rigid steel core.
b. Corrosion resistant bond between the copper and steel.
c. Hard drawn for a scar-resistant surface.
D. Grounding Clamps, Connectors and Terminals:
1. Mechanical type:
a. Standards: UL 467.
b. High copper alloy content.
2. Compression type for interior locations:
a. Standards: UL 467.
b. High copper alloy content.
c. Non-reversible.
d. Terminals for connection to bus bars shall have two bolt holes.
3. Compression type suitable for direct burial in earth or concrete:
a. Standards: UL 467, IEEE 837.
b. High copper alloy content.
c. Non-reversible.
E. Exothermic Weld Connections:
1. Copper oxide reduction by aluminum process.
2. Molds properly sized for each application.

PART 3 EXECUTION

3.1 INSTALLATION

A. General:
1. Install products in accordance with manufacturer's instructions.
2. Size grounding conductors and bonding jumpers in accordance with NFPA 70 Article 250, except where larger sizes are indicated.
3. Remove paint, rust, or other nonconducting material from contact surfaces before making ground connections.
4. Do not splice grounding conductors except at ground rods.
5. Install ground rods and grounding conductors in undisturbed, firm soil.

a. Provide excavation required for installation of ground rods and ground conductors.
b. Use driving studs or other suitable means to prevent damage to threaded ends of sectional rods.
c. Unless otherwise specified, connect conductors to ground rods with exothermic weld.
d. Provide sufficient slack in grounding conductor to prevent conductor breakage during backfill or due to ground movement.
e. Backfill excavation completely, thoroughly tamping to provide good contact between backfill materials and ground rods and conductors.

6. Do not use exothermic welding if it will damage the structure the grounding conductor is being welded to.

B. Supplemental Grounding Electrode:
1. Provide the following grounding in addition to the equipment ground conductor supplied with the feeder conductors whether or not indicated.
2. Equipment support rack and pedestals mounted outdoors:
a. Connect metallic structure to a ground rod.
b. Grounding conductor: #6 AWG minimum.

C. Raceway Bonding/Grounding:
1. All metallic conduit shall be installed so that it is electrically continuous.
2. All conduits to contain a grounding conductor with insulation identical to the phase conductors, unless otherwise indicated.
3. NFPA 70 required grounding bushings shall be of the insulating type.
4. Provide double locknuts at all panels.
5. Bond all conduit, at entrance and exit of equipment, to the equipment ground bus or lug.
6. Provide bonding jumpers if conduits are installed in concentric knockouts.
7. Make all metallic raceway fittings and grounding clamps tight to ensure equipment grounding system will operate continuously at ground potential to provide low impedance current path for proper operation of overcurrent devices during possible ground fault conditions.

D. Equipment Grounding:
1. All utilization equipment shall be grounded with an equipment ground conductor.

3.2 FIELD QUALITY CONTROL

A. Leave grounding system uncovered until observed by Owner.
B. Test ground resistance using 3 point method and provide report of test result. Maximum resistance shall be 5 ohms.

END OF SECTION

SECTION 16125

WIRE AND CABLE: 600 VOLT AND BELOW

PART 1 GENERAL

1.1 SUMMARY

A. Section Includes:
   A. Material and installation requirements for:
      1. Building wire.
      2. Instrumentation cable.
      3. Wire connectors.
      4. Insulating tape.
      5. Pulling lubricant.
B. Related Sections:
   1. Section 16010 (Electrical: Basic Requirements).

1.2 REFERENCES

A. CSA	Test Methods for Electrical Wires and Cables (FT-4 Vertical Cable Tray Test)
B. IEEE 1202	Standard for Flame-Propagation Testing of Wire and Cable
C. NEMA ICS 4	Industrial Control and Systems: Terminal Blocks
D. NFPA 70	National Electrical Code (NEC)
E. UL 44	Standard for Safety Thermoset-Insulated Wires and Cables
F. UL 83	Standard for Safety Thermoplastic-Insulated Wires and Cables
G. UL 467	Standard for Safety Grounding and Bonding Equipment
H. UL 486A	Standard for Safety Wire Connectors and Soldering Lugs for use with Copper Conductors
I. UL 486C	Standard for Safety Splicing Wire Connections
J. UL 510	Standard for Safety Polyvinyl Chloride, Polyethylene and Rubber Insulating Tape
K. UL 1581	Standard for Safety Reference Standard for Electrical Wires, Cables, and Flexible Cords
L. UL 2250	Standard for Safety Instrumentation Tray Cable

1.3 DEFINITIONS

A. Cable: Multi-conductor, insulated, with outer sheath containing either building wire or instrumentation wire.
B. Instrumentation Cable:
   1. Multiple conductor, insulated, twisted or untwisted, with outer sheath.
   2. The following are specific types of instrumentation cables:
      a. Analog signal cable:
         1) Used for the transmission of low current (e.g., 4-20mA DC) or low voltage (e.g., 0-10 Vdc) signals, using No. 16 AWG and smaller conductors.
         2) Commonly used types are defined in the following:
            (a) TSP: Twisted shielded pair.
            (b) TST: Twisted shielded triad.

b. Digital signal cable: Used for the transmission of digital signals between computers, PLC's, RTU's, etc.

C. Building Wire: Single conductor, insulated, with or without outer jacket depending upon type.

1.4 SUBMITTALS

A. Product Data:
1. Provide submittal data for all products specified in Part 2 of this specification except:
   a. Wire connectors.
   b. Insulating tape.
   c. Cable lubricant.
2. See Section 16010 (Electrical: Basic Requirements) for additional requirements.

1.5 DELIVERY, STORAGE, AND HANDLING

A. See Section 16010 (Electrical: Basic Requirements).

PART 2 PRODUCTS

2.1 MANUFACTURERS

A. Subject to compliance with the Contract Documents, the following manufacturers are acceptable:
1. Building wire:
   a. American Insulated Wire Corporation.
   b. General Cable.
   c. Manhattan/CDT.
   d. Southwire Company.
   e. Or Approved Equal.
2. Instrumentation cable:
   a. Analog cable:
      1) Alpha Wire Corporation.
      2) American Insulated Wire Corporation.
      3) Belden CDT Inc.
      4) General Cable.
      5) Manhattan/CDT.
      6) Or Approved Equal.
3. Wire connectors:
   a. Burndy Corporation.
   b. Buchanan.
   c. Ideal.
   d. Ilsco.
   e. 3M Co.
   f. Teledyne Penn Union.
   g. Thomas and Betts.
   h. Phoenix Contact.
   i. Or Approved Equal.
4. Insulating and color coding tape:
   a. 3M Co.
   b. Plymouth Bishop Tapes.

c. Red Seal Electric Co.
d. Or Approved Equal.

2.2 MANUFACTURED UNITS

A. Building Wire:
1. Conductor shall be copper with 600 V rated insulation.
2. Conductors shall be stranded, except for conductors used in lighting and receptacle circuits which may be stranded or solid.
3. Surface mark with manufacturers name or trademark, conductor size, insulation type and UL label.
4. Conform to NEMA/ICEA WC 70/S-95-658 and UL 83 for type THHN/THWN and THHN/THWN-2 insulation or NEMA/ICEA WC 70/S-95-658 and UL 44 for type XHHW-2 insulation.

B. Electrical Equipment Control Wire:
1. Conductor shall be copper with 600 V rated insulation.
2. Conductors shall be stranded.
3. Surface mark with manufacturers name or trademark, conductor size, insulation type and UL label.
4. Conform to UL 44 for Type SIS insulation.
5. Conform to UL 83 for Type MTW insulation.

C. Instrumentation Cable:
1. Surface mark with manufacturers name or trademark, conductor size, insulation type and UL label.
2. Analog cable:
a. Tinned copper conductors, #16 AWG minimum.
b. 600 V PVC insulation with PVC jacket.
c. Twisted with 100 percent foil shield coverage with drain wire.
d. Six (6) twists per foot minimum.
e. Individual conductor color coding: ICEA Method 1, Table K-2.
f. Conform to UL 2250, UL 1581 and NFPA 70 Type ITC.
g. Cables to have individual shielded pairs.

D. Wire Connectors:
1. Twist/screw on type:
a. Insulated pressure or spring type solderless connector.
b. 600 V rated.
c. Ground conductors: Conform to UL 486C and/or UL 467 when required by local codes.
d. Phase and neutral conductors: Conform to UL 486C.
2. Compression and mechanical screw type:
a. 600 V rated.
b. Ground conductors: Conform to UL 467.
c. Phase and neutral conductors: Conform to UL 486A.
3. Terminal block type:
a. High density, screw-post barrier-type with white center marker strip.
b. 600 V and ampere rating as required, for power circuits.
c. 600 V, 20 ampere rated for control circuits.
d. 300 V, 15 ampere rated for instrumentation circuits.
e. Conform to NEMA ICS 4 and UL 486A.

E. Insulating and Color Coding Tape:
   1. Pressure sensitive vinyl.
   2. Premium grade.
   3. Heat, cold, moisture, and sunlight resistant.
   4. Thickness, depending on use conditions: 7, 8.5, or 10 mil.
   5. For cold weather or outdoor location, tape must also be all-weather.
   6. Color:
      a. Insulating tape: Black.
      b. Color coding tape: Fade-resistant color as specified herein.
   7. Comply with UL 510.
F. Pulling Lubricant: Cable manufacturer's standard containing no petroleum or other products which will deteriorate insulation.

PART 3 EXECUTION

3.1 INSTALLATION

A. Permitted Usage of Insulation Types:
   1. Type XHHW-2 or Type THHN/THWN and THHN/THWN-2.
      a. Building wire.
      b. Building wire in conduit below grade.
   2. Type SIS and MTW:
      a. For the wiring of control equipment within control panels and field wiring of control equipment within switchgear, switchboards, motor control centers.
B. Conductor Size Limitations:
   1. Feeder and branch power conductors shall not be smaller than No. 12 AWG unless otherwise indicated.
   2. Control conductors shall not be smaller than No. 14 AWG unless otherwise indicated.
   3. Instrumentation conductors shall not be smaller than No. 18 AWG unless otherwise indicated.
C. Color Code All Wiring as Follows:
   1. Building wire:

	240 V, 208 V, 240/120 V, 208/120 V	480 V, 480/277 V
Phase 1	Black	Brown
Phase 2	Red	Orange
Phase 3	Blue	Yellow
Neutral	White	White or Gray
Ground	Green	Green

      a. Conductors No. 6 AWG and smaller: Insulated phase, neutral and ground conductors shall be identified by a continuous colored outer finish along its entire length.
      b. Conductors larger than No. 6 AWG:
         1) Insulated phase and neutral conductors shall be identified by one (1) of the following methods:
            (a) Continuous colored outer finish along its entire length.

(b) 3 IN of colored tape applied at the termination.
2) Insulated grounding conductor shall be identified by one (1) of the following methods:
(a) Continuous green outer finish along its entire length.
(b) Stripping the insulation from the entire exposed length.
(c) Using green tape to cover the entire exposed length.
3) The color coding shall be applied at all accessible locations, including but not limited to: Junction and pull boxes, wireways, manholes and handholes.

D. Install all wiring in raceway unless otherwise indicated.

E. Feeder, branch, control and instrumentation circuits shall not be combined in a raceway, cable tray, junction or pull box, except as permitted in the following:
1. Where specifically indicated.
2. Where field conditions dictate and written permission is obtained from Owner.
3. Control circuits shall be isolated from feeder and branch power and instrumentation circuits but combining of control circuits is permitted.
a. The combinations shall comply with the following:
1) 12 Vdc, 24 Vdc and 48 Vdc may be combined.
2) 125 Vdc shall be isolated from all other AC and DC circuits.
3) AC control circuits shall be isolated from all DC circuits.
4. Instrumentation circuits shall be isolated from feeder and branch power and control circuits but combining of instrumentation circuits is permitted.
a. The combinations shall comply with the following:
1) Analog signal circuits may be combined.
2) Digital signal circuits may be combined but isolated from analog signal circuits.
5. Multiple branch circuits for lighting, receptacle and other 120 Vac circuits are allowed to be combined into a common raceway.
a. Contractor is responsible for making the required adjustments in conductor and raceway size, in accordance with all requirements of the NEC, including but not limited to:
1) Up sizing conductor size for required ampacity de-ratings for the number of current carrying conductors in the raceway.
2) Up sizing raceway size for the size and quantity of conductors.

F. Ground the drain wire of shielded instrumentation cables at one (1) end only.
1. The preferred grounding location is at the load (e.g., control panel), not at the source (e.g., field mounted instrument).

G. Splices and terminations for the following circuit types shall be made in the indicated enclosure type using the indicated method.
1. Feeder and branch power circuits:
a. Device outlet boxes:
1) Twist/screw on type connectors.
b. Junction and pull boxes and wireways:
1) Twist/screw on type connectors for use on No. 8 and smaller wire.
2) Compression, mechanical screw or terminal block or terminal strip type connectors for use on No. 6 AWG and larger wire.
c. Motor terminal boxes:
1) Twist/screw on type connectors for use on No. 10 AWG and smaller wire.
2) Insulated mechanical screw type connectors for use on No. 8 AWG and larger wire.

d. Handholes:
   1) Twist/screw on type connectors pre-filled with epoxy for use on No. 8 AWG and smaller wire.
   2) Watertight compression or mechanical screw type connectors for use on No. 6 AWG and larger wire.

2. Control circuits:
   a. Junction and pull boxes: Terminal block type connector.
   b. Manholes or handholes: Twist/screw on type connectors pre-filled with epoxy.
   c. Control panels and motor control centers: Terminal block or strips provided within the equipment or field installed within the equipment by the Contractor.
3. Instrumentation circuits can be spliced where field conditions dictate and written permission is obtained from Owner.
   a. Maintain electrical continuity of the shield when splicing twisted shielded conductors.
   b. Junction and pull boxes: Terminal block type connector.
   c. Control panels and motor control centers: Terminal block or strip provided within the equipment or field installed within the equipment by the Contractor.
4. Non-insulated compression and mechanical screw type connectors shall be insulated with tape or hot or cold shrink type insulation to the insulation level of the conductors.

H. Insulating Tape Usage:
   1. For insulating connections of No. 8 AWG wire and smaller: 7 mil vinyl tape.
   2. For insulating splices and taps of No. 6 AWG wire or larger: 10 mil vinyl tape.
   3. For insulating connections made in cold weather or in outdoor locations: 8.5 mil, all weather vinyl tape.

I. Color Coding Tape Usage: For color coding of conductors.

3.2 FIELD QUALITY CONTROL

A. Replace any damaged wire or cable.

END OF SECTION

SECTION 16130

RACEWAY AND BOXES

PART 1 GENERAL

1.1 SUMMARY

A. Section Includes:
   1. Material and installation requirements for:
      a. Conduits.
      b. Conduit fittings.
      c. Conduit supports.
      d. Wireways.
      e. Outlet boxes.
      f. Pull and junction boxes.

B. Related Sections:
   1. Section 16010 (Electrical: Basic Requirements).
   2. Section 16135 (Electrical: Exterior Underground).

1.2 REFERENCES

A. ASTM A123	Standard Specification for Zinc (Hot-Dip Galvanized) Coatings on Iron and Steel Products
B. ASTM A153	Standard Specification for Zinc Coating (Hot-Dip) on Iron and Steel Hardware
C. ASTM D2564	Standard Specification for Solvent Cements for Poly (Vinyl Chloride) (PVC) Plastic Piping Systems
D. NEMA 250	Enclosures for Electrical Equipment (1000 Volts Maximum)
E. NEMA RN1	Polyvinyl Chloride (PVC) Externally Coated Galvanized Rigid Steel Conduit and Intermediate Metal Conduit (IMC)
F. NEMA TC2	Electrical Polyvinyl Chloride (PVC) Tubing and Conduit
G. NEMA TC3	Polyvinyl Chloride (PVC) Fittings for Use with Rigid PVC Conduit and Tubing
H. NEMA/ANSI C80.1	Electric Rigid Steel Conduit (ERSC)
I. NFPA 70	National Electrical Code (NEC)
J. UL 6	Standard for Electrical Rigid Metal Conduit - Steel
K. UL 50	Enclosures for Electrical Equipment, Non-Environmental Considerations
L. UL 360	Standard for Liquid-Tight Flexible Steel Conduit
M. UL 467	Grounding and Bonding Equipment
N. UL 514B	Conduit, Tubing, and Cable Fittings
O. UL 651	Standard for Schedule 40 and 80 Rigid PVC Conduit and Fittings
P. UL 870	Standard for Wireways, Auxiliary Gutters, and Associated Fittings
Q. UL 886	Standard for Outlet Boxes and Fittings for Use in Hazardous (Classified) Locations

1.3 SUBMITTALS

A. Product Data:
   1. Provide submittal data for all products specified in PART 2 of this Section 16130 except:
      a. Conduit fittings.
      b. Support systems.
   2. See Section 16010 (Electrical: Basic Requirements) for additional requirements.
B. Fabrication and/or layout drawings:
   1. Identify dimensional size of pull and junction boxes to be used.

1.4 DELIVERY, STORAGE, AND HANDLING

A. Protect equipment and materials.

PART 2 PRODUCTS

2.1 MANUFACTURERS

A. Subject to compliance with the Contract Documents, the following manufacturers are acceptable:
   1. Rigid metallic conduits:
      a. Allied Tube and Conduit Corporation.
      b. Triangle PWC Inc.
      c. Western Tube and Conduit Corporation.
      d. Wheatland Tube Company.
      e. LTV Steel Company.
      f. Or Approved Equal.
   2. PVC coated rigid metallic conduits and repair kits:
      a. Occidental Coating Company.
      b. Perma-Cote.
      c. Rob-Roy Ind.
      d. Raychem "GelTek" tape.
      e. Or Approved Equal.
   3. Rigid non-metallic conduit:
      a. Carlon.
      b. Cantex.
      c. Osburn Associates.
      d. Or Approved Equal.
   4. Flexible conduit:
      a. AFC Cable Systems.
      b. Anamet, Inc.
      c. Electri-Flex.
      d. Flexible Metal Hose Company.
      e. International Metal Hose Company.
      f. Triangle PWC Inc.
      g. LTV Steel Company.
      h. Or Approved Equal.
   5. Wireway:
      a. Hoffman Engineering Company.
      b. Wiegmann.
      c. Square D.

   d. Or Approved Equal.
6. Conduit fittings and accessories:
   a. Appleton.
   b. Carlon.
   c. Cantex.
   d. Crouse-Hinds.
   e. Killark.
   f. Osburn Associates.
   g. OZ Gedney Company.
   h. RACO.
   i. Steel City.
   j. Thomas and Betts.
   k. Or Approved Equal.
7. Support systems:
   a. Unistrut Building Systems.
   b. B-Line Systems Inc.
   c. Kindorf.
   d. Minerallac Fastening Systems.
   e. Caddy.
   f. Or Approved Equal.
8. Outlet, pull and junction boxes:
   a. Appleton Electric Co.
   b. Crouse-Hinds.
   c. Killark.
   d. O-Z/Gedney.
   e. Steel City.
   f. Raco.
   g. Bell.
   h. Hoffman Engineering Co.
   i. Wiegmann.
   j. B-Line Circle AW.
   k. Adalet.
   l. Rittal.
   m. Or Approved Equal.

2.2 RIGID METALLIC CONDUITS

A. Rigid Galvanized Steel Conduit (RGS):
   1. Mild steel with continuous welded seam.
   2. Metallic zinc applied by hot-dip galvanizing or electro-galvanizing.
   3. Threads galvanized after cutting.
   4. Internal coating: Baked lacquer, varnish or enamel for a smooth surface.
   5. Standards: NEMA/ANSI C80.1, UL 6.
B. PVC-Coated Rigid Steel Conduit (PVC-RGS):
   1. Nominal 40 mil Polyvinyl Chloride Exterior Coating:
      a. Coating: Bonded to hot-dipped galvanized rigid steel conduit conforming to NEMA/ANSI C80.1.
      b. The bond between the PVC coating and the conduit surface: Greater than the tensile strength of the coating.

2. Nominal 2 mil, minimum, urethane interior coating.
3. Urethane coating on threads.
4. Conduit: Epoxy prime coated prior to application of PVC and urethane coatings.
5. Female Ends:
   a. Have a plastic sleeve extending a minimum of 1 pipe diameter or 2 IN, whichever is less beyond the opening.
   b. The inside diameter of the sleeve shall be the same as the outside diameter of the conduit to be used with it.
6. Standards: NEMA/ANSI C80.1, UL 6, NEMA RN 1.

2.3 RIGID NON-METALLIC CONDUIT

A. Schedules 40 (PVC-40) and 80 (PVC-80):
   1. Polyvinyl-chloride (PVC) plastic compound which includes inert modifiers to improve weatherability and heat distribution.
   2. Rated for direct sunlight exposure.
   3. Fire retardant and low smoke emission.
   4. Shall be suitable for use with 90 DegC wire and shall be marked "maximum 90 DegC".
   5. Standards: NEMA TC 2, UL 651.

2.4 FLEXIBLE CONDUIT

A. PVC-Coated Flexible Galvanized Steel (liquid-tight) Conduit (FLEX-LT):
   1. Core formed of continuous, spiral wound, hot-dip galvanized steel strip with successive convolutions securely interlocked.
   2. Extruded PVC outer jacket positively locked to the steel core.
   3. Liquid and vaportight.
   4. Standard: UL 360.

2.5 WIREWAY

A. General:
   1. Suitable for lay-in conductors.
   2. Designed for continuous grounding.
   3. Covers:
      a. Hinged or removable in accessible areas.
      b. Non-removable when passing through partitions.
   4. Finish: Rust inhibiting primer and manufacturers standard paint inside and out except for stainless steel type.
   5. Standards: UL 870, NEMA 250.
B. Watertight (NEMA 4X rated) Wireway:
   1. 14 GA Type 304 or 316 stainless steel bodies and covers without knockouts and 10 GA stainless steel flanges.
   2. Cover: Fully gasketed and held in place with captive clamp type latches.
   3. Flanges: Fully gasketed and bolted.
C. Dusttight (NEMA 12 rated) Wireway:
   1. 14 GA steel bodies and covers without knockouts and 10 GA steel flanges.
   2. Cover: Fully gasketed and held in place with captive clamp type latches.
   3. Flanges: Fully gasketed and bolted.

2.6 CONDUIT FITTINGS AND ACCESSORIES

A. Fittings for Use with RGS:
   1. Locknuts:
      a. Threaded steel or malleable iron.
      b. Gasketed or non-gasketed.
      c. Grounding or non-grounding type.
   2. Bushings:
      a. Threaded, insulated metallic.
      b. Grounding or non-grounding type.
   3. Hubs: Threaded, insulated and gasketed metallic for raintight connection.
   4. Couplings:
      a. Threaded straight type: Same material and finish as the conduit with which they are used on.
      b. Threadless type: Gland compression or self-threading type, concrete tight.
   5. Unions: Threaded galvanized steel or zinc plated malleable iron.
   6. Conduit bodies (ells and tees):
      a. Body: Zinc plated cast iron or cast copper free aluminum with threaded hubs.
      b. Standard and mogul size.
      c. Cover:
         1) Clip-on type with stainless steel screws.
         2) Gasketed or non-gasketed galvanized steel, zinc plated cast iron or cast copper free aluminum.
   7. Conduit bodies (round):
      a. Body: Zinc plated cast iron or cast copper free aluminum with threaded hubs.
      b. Cover: Threaded screw on type, gasketed, galvanized steel, zinc plated cast iron or cast copper free aluminum.
   8. Expansion couplings:
      a. 2 IN nominal straight-line conduit movement in either direction.
      b. Galvanized steel with insulated bushing.
      c. Gasketed for wet locations.
      d. Internally or externally grounded.
   9. Expansion/deflection couplings:
      a. 3/4 IN nominal straight-line conduit movement in either direction.
      b. 30-degree nominal deflection from the normal in all directions.
      c. Metallic hubs, neoprene outer jacket and stainless steel jacket clamps.
      d. Internally or externally grounded.
      e. Watertight, raintight and concrete tight.
   10. Standards: UL 467, UL 514B, UL 886.
B. Fittings for Use with PVC-RGS:
   1. The same material and construction as those fittings listed under paragraph "Fittings for Use with RGS" and coated as defined under paragraph "PVC Coated Rigid Steel Conduit (PVC-RGS)" of this Section 16130.
C. Fittings for Use with FLEX-LT:
   1. Connector:
      a. Straight or angle type.
      b. Metal construction, insulated and gasketed.
      c. Composed of locknut, grounding ferrule and gland compression nut.
      d. Liquid tight.

2. Standards: UL 467, UL 514B.

D. Fittings for Use with Rigid Non-Metallic PVC Conduit:
1. Coupling, adapters and conduit bodies:
a. Same material, thickness, and construction as the conduits with which they are used.
b. Homogeneous plastic free from visible cracks, holes or foreign inclusions.
c. Bore smooth and free of blisters, nicks or other imperfections which could damage the conductor.
2. Solvent cement for welding fittings shall be supplied by the same manufacturer as the conduit and fittings.
3. Standards: ASTM D2564, NEMA TC 3, UL 651, UL 514B.

E. Weather and Corrosion Protection Tape:
1. PVC based tape, 10 mils thick.
2. Protection against moisture, acids, alkalis, salts and sewage and suitable for direct bury.
3. Used with appropriate pipe primer.

2.7 ALL RACEWAY AND FITTINGS

A. Mark Products:
1. Identify the nominal trade size on the product.
2. Stamp with the name or trademark of the manufacturer.

2.8 OUTLET BOXES

A. Cast Outlet Boxes:
1. Zinc plated cast iron or die-cast copper free aluminum with manufacturers standard finish.
2. Threaded hubs and grounding screw.
3. Styles:
a. "FS" or "FD".
b. "Bell".
c. Single or multiple gang and tandem.
4. Accessories: 40 mil PVC exterior coating and 2 mil urethane interior coating.
5. Standards: UL 514A, UL 886.

2.9 PULL AND JUNCTION BOXES

A. NEMA 4X Rated (metallic):
1. Body and cover: 14 GA Type 304 or 316 stainless steel.
2. Seams continuously welded and ground smooth.
3. No knockouts.
4. External mounting flanges.
5. Hinged door and stainless steel screws and clamps.
6. Door with oil-resistant gasket.

B. NEMA 12 Rated:
1. Body and cover:
a. 14 GA steel finished with rust inhibiting primer and manufacturers standard paint inside and out.
b. Type 5052 H-32 aluminum, unpainted.
2. Seams continuously welded and ground smooth.
3. No knockouts.
4. External mounting flanges.

5. Non-hinged cover held closed with captivated cover screws threaded into sealed wells or hinged cover held closed with stainless steel screws and clamps.
6. Flat door with oil resistant gasket.

C. Miscellaneous Accessories:
1. Rigid handles for covers larger than 9 SF or heavier than 25 LBS.
2. Split covers when heavier than 25 LBS.
3. Weldnuts for mounting optional panels and terminal kits.
4. Terminal blocks: Screw-post barrier-type, rated 600 volt and 20 ampere minimum.

D. Standards: NEMA 250, UL 50.

2.10 SUPPORT SYSTEMS

A. Multi-conduit Surface or Trapeze Type Support and Pull or Junction Box Supports:
1. Material requirements.
a. Galvanized steel: ASTM A123 or ASTM A153.
b. Stainless steel: AISI Type 316.
c. PVC coat galvanized steel: ASTM A123 or ASTM A153 and 20 mil PVC coating.

B. Single Conduit and Outlet Box Support Fasteners:
1. Material requirements:
a. Zinc plated steel.
b. Stainless steel.
c. Malleable iron.
d. PVC coat malleable iron or steel: 20 mil PVC coating.
e. Steel protected with zinc phosphate and oil finish.

2.11 OPENINGS AND PENETRATONS IN WALLS AND FLOORS

A. Cut neatly. See Section 02072 (Demolition, Cutting and Patching).

PART 3 EXECUTION

3.1 RACEWAY INSTALLATION - GENERAL

A. Shall be in accordance with the requirements of:
1. NFPA 70.
2. Manufacturer instructions.

B. Size of Raceways:
1. Raceway sizes are indicated, if not indicated, then size in accordance with NFPA 70.
2. Unless specifically indicated otherwise, the minimum raceway size shall be:
a. Conduit: 3/4 IN.
b. Wireway: 2-1/2 IN x 2-1/2 IN.

C. Field Bending and Cutting of Conduits:
1. Utilize tools and equipment recommended by the manufacturer of the conduit, designed for the purpose and the conduit material to make all field bends and cuts.
2. Do not reduce the internal diameter of the conduit when making conduit bends.
3. Prepare tools and equipment to prevent damage to the PVC coating.
4. Degrease threads after threading and apply a zinc rich paint.
5. Debur interior and exterior after cutting.

D. Male threads of conduit systems shall be coated with an electrically conductive anti-seize compound.

E. The protective coating integrity of conduits, fittings, outlet, pull and junction boxes and accessories shall be maintained.
   1. Repair galvanized components utilizing a zinc rich paint.
   2. Repair painted components utilizing touch up paint provided by or approved by the manufacturer.
   3. Repair PVC coated components utilizing a patching compound, of the same material as the coating, provided by the manufacturer of the conduit; or a self-adhesive, highly conformable, cross-linked silicone composition strip, followed by a protective coating of vinyl tape.
      a. Total nominal thickness: 40 mil.
   4. Repair surfaces which will be inaccessible after installation prior to installation.
F. Remove moisture and debris from conduit before wire is pulled into place.
   1. Pull mandrel with diameter nominally 1/4 IN smaller than the interior of the conduit, to remove obstructions.
   2. Swab conduit by pulling a clean, tight-fitting rag through the conduit.
   3. Tightly plug ends of conduit with tapered wood plugs or plastic inserts until wire is pulled.
G. Only nylon or polyethylene rope shall be used to pull wire and cable in conduit systems.
H. Where portions of a raceway are subject to different temperatures and where condensation is known to be a problem, as in cold storage areas of buildings or where passing from the interior to the exterior of a building, the raceway shall be sealed to prevent circulation of warm air to colder section of the raceway.
I. Fill openings in walls, floors, and ceilings and finish flush with surface.

3.2 RACEWAY ROUTING

A. Raceways shall be routed in the field unless otherwise indicated.
   1. Conduit and fittings shall be installed, as required, for a complete system that has a neat appearance and is in compliance with all applicable codes.
   2. Run in straight lines parallel to or at right angles to building lines.
   3. Do not route conduits:
      a. Through areas of high ambient temperature or radiant heat.
      b. In suspended concrete slabs.
   4. Conduit shall not interfere with, or prevent access to, piping, valves, ductwork, or other equipment for operation, maintenance and repair.
   5. Provide pull boxes or conduit bodies as needed so that there is a maximum of 360 degrees of bends in the conduit run or in long straight runs to limit pulling tensions.
B. All rigid conduits within a structure shall be installed exposed.
C. Conduits shall be installed to eliminate moisture pockets.
   1. Where water cannot drain to openings, provide drain fittings in the low spots of the conduit run.
D. Conduit shall not be routed on the exterior of structures except as specifically indicated.
E. Provide all required openings in walls, floors, and ceilings for conduit penetration.

3.3 RACEWAY APPLICATIONS

A. Permitted Raceway Types Per Wire or Cable Types:
   1. Power wire or cables: All raceway types.
   2. Control wire or cables: All raceway types.
   3. Instrumentation cables: Metallic raceway except non-metallic may be used underground.

B. Permitted Raceway Types Per Area Designations:
   1. Dry areas:
      a. RGS.
   2. Wet areas:
      a. PVC-RGS.
C. Permitted Raceway Types Per Routing Locations:
   1. Concrete encased ductbanks:
      a. PVC-40.
      b. 90 degree elbows for transitions to above grade:
         1) PVC-RGS.
D. FLEX-LT conduits shall be install as the final conduit connections to equipment.
E. NEMA 4X Rated Wireway:
   1. Surface mounted in areas designated as wet.
F. NEMA 12 Rated Wireway:
   1. Surface mounted in areas designated as dry.
G. Underground Conduit: See Section 16135 (Electrical: Exterior Underground).

3.4 CONDUIT FITTINGS AND ACCESSORIES

A. Rigid non-metallic conduit and fittings shall be joined utilizing solvent cement.
   1. Immediately after installation of conduit and fitting, the fitting or conduit shall be rotated 1/4 turn to provide uniform contact.
B. Install Expansion Fittings:
   1. Where conduits are exposed to the sun and conduit run is greater than 200 FT.
   2. Elsewhere as indicated.
C. Install Expansion/Deflection Fittings:
   1. Where conduits enter a structure.
      a. Except electrical manholes and handholes.
      b. Except where the ductbank is tied to the structure with rebar.
   2. Where conduits span structural expansions joints.
   3. Elsewhere as indicated.
D. Threaded connections shall be made wrench-tight.
E. Conduit joints shall be watertight:
   1. Where subjected to possible submersion.
   2. In areas classified as wet.
   3. Underground.
F. Terminate Conduits:
   1. In metallic outlet boxes:
      a. RGS:
         1) Conduit hub and locknut.
         2) Insulated bushing and two (2) locknuts.
         3) Use grounding type locknut or bushing when required by NFPA 70.
   2. In NEMA 1 rated enclosures:
      a. RGS:
         1) Conduit hub and locknut.
         2) Insulated bushing and two (2) locknuts.
         3) Use grounding type locknut or bushing when required by NFPA 70.
   3. In NEMA 12 rated enclosures:
      a. Watertight, insulated and gasketed hub and locknut.

b. Use grounding type locknut or bushing when required by NFPA 70.
4. In NEMA 4X rated enclosures:
a. Watertight, insulated and gasketed hub and locknut.
5. When stubbed up through the floor into floor mount equipment:
a. With an insulated grounding bushing on metallic conduits.
b. With end bells on non-metallic conduits.

G. Threadless couplings shall only be used to join new conduit to existing conduit when the existing conduit end is not threaded and it is not practical or possible to cut threads on the existing conduit with a pipe threader.

3.5 CONDUIT SUPPORT

A. Permitted multi-conduit surface or trapeze type support system per area designations and conduit types:
1. Dry areas:
a. Galvanized system consisting of: Galvanized steel channels and fittings, nuts and hardware and conduit clamps.
2. Wet areas:
a. Stainless steel system.
b. PVC coated steel system consisting of: PVC coated galvanized steel channels and fittings and conduit clamps with stainless steel nuts and hardware.
3. Conduit type shall be compatible with the support system material.
a. Galvanized steel system may be used with RGS.
b. Stainless steel system may be used with RGS and PVC-RGS.
c. PVC coated galvanized steel system may be used with PVC-RGS.

B. Permitted single conduit support fasteners per area designations and conduit types:
1. Architecturally finished areas:
a. Material: Zinc plated steel, or steel protected with zinc phosphate and oil finish.
b. Types of fasteners: Spring type hangers and clips, straps, hangers with bolts, clamps with bolts and bolt on beam clamps.
c. Provide anti-rattle conduit supports when conduits are routed through metal studs.
2. Dry areas:
a. Material: Zinc plated steel, stainless steel and malleable iron.
b. Types of fasteners: Straps, hangers with bolts, clamps with bolts and bolt on beam clamps.
3. Wet areas:
a. Material: Stainless steel and PVC coated malleable iron or steel.
b. Types of fasteners: Straps, hangers with bolts, clamps with bolts and bolt on beam clamps.
4. Conduit type shall be compatible with the support fastener material.
a. Zinc plated steel, steel protected with zinc phosphate and oil finish and malleable iron fasteners may be used with RGS.
b. Stainless steel system may be used with RGS and PVC-RGS.
c. PVC coated fasteners may be used with PVC-RGS.

C. Conduit Support General Requirements:
1. Maximum spacing between conduit supports per NFPA 70.
2. Support conduit from the building structure.
3. Do not support conduit from process, gas, air or water piping; or from other conduits.

4. Provide hangers and brackets to limit the maximum uniform load on a single support to 25 LBS or to the maximum uniform load recommended by the manufacturer if the support is rated less than 25 LBS.
   a. Do not exceed maximum concentrated load recommended by the manufacturer on any support.
   b. Conduit hangers:
      1) Continuous threaded rods combined with struts or conduit clamps: Do not use perforated strap hangers and iron bailing wire.
5. Conduit support system fasteners:
   a. Use sleeve-type expansion anchors as fasteners in masonry wall construction.
   b. Do not use concrete nails and powder-driven fasteners.

3.6 OUTLET, PULL AND JUNCTION BOX INSTALLATION

A. General:
   1. Install products in accordance with manufacturer's instructions.
   2. Fill unused punched-out, tapped, or threaded hub openings with insert plugs.
   3. Size boxes to accommodate quantity of conductors enclosed and quantity of conduits connected to the box.
B. Outlet Boxes: Cast type only.
   1. Mount device outlet boxes where indicated.
   2. Set device outlet boxes plumb and vertical to the floor.
   3. When an outlet box is connected to a PVC coated conduit, the box shall also be PVC coated.
C. Pull and Junction Boxes:
   1. Install pull or junction boxes in conduit runs where indicated or required to facilitate pulling of wires or making connections.
      a. Make covers of boxes accessible.
   2. Permitted uses of NEMA 4X metallic enclosure:
      a. Pull or junction box surface mounted in areas designated as wet and/or corrosive.
   3. Permitted uses of NEMA 12 enclosure:
      a. Pull or junction box surface mounted in areas designated as dry.

END OF SECTION

SECTION 16135

ELECTRICAL: EXTERIOR UNDERGROUND

PART 1 GENERAL

1.1 SUMMARY

A. Section Includes:
   1. Material and installation requirements for:
      a. Handhole.
      b. Underground conduits and ductbanks.
B. Related Sections:
   1. Section 02300 (Earthwork).
   2. Section 16130 (Raceway and Boxes).

1.2 REFERENCES

A. AASHTO	Standard Specifications for Highway Bridges
B. ASTM A536	Standard Specification for Ductile Iron Castings
C. NFPA 70	National Electrical Code (NEC)
D. SCTE 77	Specification for Underground Enclosure Integrity

1.3 DEFINITIONS

A. Concrete encased ductbank: An individual (single) or multiple conduit(s), arranged in one or more planes, encased in a common red concrete envelope.

1.4 SUBMITTALS

A. Product Data:
   1. Provide submittal data for all products specified in PART 2 of this Specification Section.
   2. Fabrication and/or layout drawings:
      a. Provide dimensional drawings of each manhole indicating all specified accessories and conduit entry locations.

PART 2 PRODUCTS

2.1 MANUFACTURERS

A. Subject to compliance with the Contract Documents, the following manufacturers are acceptable:
   1. Precast handholes:
      a. Utility Vault Co.
      b. Oldcastle Precast, Inc.
      c. Lister Industries.
      d. Or Approved Equal.

2.2 HANDHOLES

A. Precast Handholes:
   1. Fiberglass reinforced polymer concrete or steel reinforced cement concrete structures:
   2. Shall have an AASHTO live load rating of H-20 for full deliberate vehicle traffic.
   3. Mating edges: Tongue and groove type.
   4. Open bottom.

5. Removable galvanized steel cover labeled “ELECTRICAL”.
6. Cover extension rings as required.

2.3 UNDERGROUND CONDUIT AND ACCESSORIES

A. Concrete: 4000 psi colored red.
B. Conduit: See Section 16130 (Raceway and Boxes).
C. Duct Spacers/Supports:
   1. High density polyethylene or high impact polystyrene.
   2. Interlocking.
   3. Provide 2 IN minimum spacing between conduits.
   4. Accessories, as required:
      a. Hold down bars.
      b. Ductbank strapping.
D. Warning tape, plastic, 6 IN wide, marked “BURIED ELECTRICAL CONDUIT”.

PART 3 EXECUTION

3.1 GENERAL

A. Approximate location of handholes and routing of ductbanks as indicated.
   1. Field conditions may affect actual routing.
B. Handhole Locations:
   1. Approximately where indicated.
   2. As required for pulling distances.
   3. As required to keep pulling tensions under allowable cable tensions.
   4. As required for number of bends in ductbank routing.
   5. Shall not be installed in a swale or ditch.
   6. Determine the exact locations after careful consideration has been given to the location of other utilities, grading, and paving.
   7. Locations are to be approved by Owner prior to excavation and placement or construction of manholes and handholes.
C. Install products in accordance with manufacturer's instructions.
D. Install handholes in conduit runs where indicated or as required to facilitate pulling of wires or making connections.
E. Comply with Section 02300 (Earthwork), for trenching, backfilling and compacting.

3.2 HANDHOLES

A. Precast Handholes:
   1. For use in vehicular and non-vehicular traffic areas.
   2. Construction:
      a. Grout or seal all joints, per manufacturers instructions.
   3. Place handhole on a foundation of compacted 1/4 to 1/2 IN crushed rock or gravel a minimum of 8 IN thick and 6 IN larger than handholes footprint on all sides.
   4. Install so that the top of cover is 1 IN above finished grade.
      a. Where existing grades are higher than finished grades, install sufficient number of courses of curved segmented concrete block between top of handhole and manhole frame to temporarily elevate manhole cover to existing grade level.
   5. After installation is complete, backfill and compact soil around handholes.

6. Handhole size:
   a. As indicated or as required for the number and size of conduits entering.
   b. Minimum floor dimension of 1 FT x 2 FT and minimum depth of 2 FT.

3.3 UNDERGROUND CONDUITS

A. General Installation Requirements:
   1. Concrete encased ductbank with red concrete.
   2. Do not place concrete until conduits have been observed by Owner.
   3. Ductbanks shall be sloped a minimum of 4 IN per 100 FT or as indicated.
      a. Low points shall be at handholes.
   4. During construction and after conduit installation is complete, plug the ends of all conduits.
   5. Provide conduit supports and spacers.
      a. Place supports and spacers for rigid nonmetallic conduit on maximum centers as indicated for the following trade sizes:
         1) 1 IN and less: 3 FT.
         2) 1-1/4 to 3 IN: 5 FT.
         3) 3-1/2 to 6 IN: 7 FT.
      b. Place supports and spacers for rigid steel conduit on maximum centers as indicated for the following trade sizes:
         1) 1 IN and less: 10 FT.
         2) 1-1/4 to 2-1/2 IN: 14 FT.
         3) 3 IN and larger: 20 FT.
      c. Securely anchor conduits to supports and spacers to prevent movement during placement of concrete or soil.
   6. Stagger conduit joints at intervals of 6 IN vertically.
   7. Make conduit joints watertight and in accordance with manufacturer's recommendations.
   8. Accomplish changes in direction of runs exceeding a total of 15 degrees by long sweep bends having a minimum radius of 25 FT.
      a. Sweep bends may be made up of one or more curved or straight sections or combinations thereof.
   9. Furnish manufactured bends at end of runs.
      a. Minimum radius of 18 IN for conduits less than 3 IN trade size and 36 IN for conduits 3 IN trade size and larger.
   10. Field cuts requiring tapers shall be made with the proper tools and shall match factory tapers.
   11. After the conduit run has been completed:
      a. Prove joint integrity and test for out-of-round duct by pulling a test mandrel through each conduit.
         1) Test mandrel:
            (a) Length: Not less than 12 IN
            (b) Diameter: Approximately 1/4 IN less than the inside diameter of the conduit.
      b. Clean the conduit by pulling a heavy duty wire brush mandrel followed by a rubber duct swab through each conduit.
   12. Pneumatic rodding may be used to draw in lead wire.
      a. Install a heavy nylon cord free of kinks and splices in all unused new ducts.

   b. Extend cord 3 FT beyond ends of conduit.
13. Transition from rigid non-metallic conduit to rigid metallic conduit, per Section 16130 (Raceway and Boxes), prior to entering a structure or going above ground.
    a. Except rigid non-metallic conduit may be extended directly to handholes, pad mounted transformer boxes and other exterior pad mounted electrical equipment where the conduit is concealed within the enclosure.
    b. Terminate rigid PVC conduits with end bells.
    c. Terminate steel conduits with insulated bushings.
14. Place warning tape in trench 12 IN above ductbanks.
15. Placement of conduits stubbing into handholes shall be located to allow for proper bending radiuses of the cables.

B. Concrete Encased Ductbank:
1. Ductbank system consists of conduits completely encased in minimum 2 IN of concrete and with separations between different cabling types as required in Section 16130 (Raceway and Boxes) or as indicated.
2. Install so that top of concrete encased duct, at any point:
    a. Is not less than 24 IN below grade.
    b. Is below pavement sub-grading.
3. Conduit supports shall provide a uniform minimum clearance of 2 IN between the bottom of the trench and the bottom row of conduit.
4. Conduit separators shall provide a uniform minimum clearance of 2 IN between conduits or as required in Section 16130 (Raceway and Boxes) for different cabling types.

END OF SECTION

SECTION 16140

WIRING DEVICES

PART 1 GENERAL

1.1 SUMMARY

A. Section Includes:
   1. Material and installation requirements for:
      a. Light switches.
      b. Receptacles.
      c. Device wallplates and coverplates.

1.2 REFERENCES

A.	NEMA 250	Enclosures for Electrical Equipment (1000 Volts Maximum)
B.	NEMA WD-1	Wiring Devices
C.	NEMA WD-6	Wiring Devices - Dimensional Requirements
D.	NEMA 5-20R	Receptacle Configuration
E.	UL 20	General Use Snap Switches
F.	UL 498	Attachment Plugs and Receptacles
G.	UL 514A	Metallic Outlet Boxes
H.	UL 894	Safety Switches for Use in Hazardous (Classified) Locations
I.	UL 943	Ground-Fault Circuit-Interrupters
J.	UL 1010	Receptacle-Plug Combinations for Use in Hazardous (Classified) Locations

1.3 SUBMITTALS

A. See Section 16010 (Electrical: Basic Requirements).

PART 2 PRODUCTS

2.1 MANUFACTURERS

A. Subject to compliance with the Contract Documents, the following manufacturers are acceptable:
   1. Light switches and receptacles:
      a. Hubbell.
      b. Bryant.
      c. Pass & Seymour.
      d. Arrow Hart.
      e. General Electric.
      f. Leviton.
      g. Crouse-Hinds.
      h. Appleton Electric Co.
      i. Killark.
      j. Or Approved Equal.

2.2 LIGHT SWITCHES

A. General requirements unless modified in specific requirements paragraph of switches per designated areas or types:
   1. Toggle type, quiet action, Standard Specification grade.
   2. Self grounding with grounding terminal.
   3. Back and side wired.
   4. Solid silver cadmium oxide contacts.
   5. Rugged urea housing and one-piece switch arm.
   6. Rated 20 A, 120/277 V AC.
   7. Switch handle color: Ivory.
   8. Types as indicated:
      a. Single pole.
      b. Double pole.
      c. 3-way.
      d. 4-way.
   9. Standards: UL 20, 514A; NEMA WD-6.
B. Wallplate: Type 302 stainless steel. Single or multiple gang as required.
C. Wet and Corrosive Areas:
   1. Corrosion resistant nickel plated metal parts.
   2. Coverplate: Gasketed zinc plated malleable iron or copper free aluminum with stainless steel screws utilizing rocker, front mounted toggle or pull type switch. Single or multiple gang as required.

2.3 RECEPTACLES

A. General requirements unless modified in specific requirements paragraph of receptacles per designated areas:
   1. Straight blade, Standard Specification grade, all GFCI type.
   2. Brass triple wipe line contacts.
   3. One piece grounding system with double wipe brass grounding contacts and self grounding strap.
   4. Back and side wired.
   5. Rated 20 A, 125 V AC.
   6. High impact nylon body.
   7. Receptacle body color:
      a. Normal power: Ivory.
      b. Generator or UPS power: Red.
   8. All outlets to be ground fault circuit interrupter: Feed-through type with test and reset buttons.
   9. Duplex or simplex as indicated.
   10. Configuration: NEMA 5-20R.
   11. Standards: UL 498, 514A, 943; NEMA WD-1, WD-6.
B. Wallplate: Type 302 stainless steel.
C. Wt and Corrosive Areas:
   1. Corrosion resistant nickel plated metal parts.
   2. Receptacle body color: Yellow.
D. Special Purpose Receptacles:
   1. NEMA configuration as indicated.
   2. Coverplate: See requirements per area designations herein.

PART 3 EXECUTION

3.1 INSTALLATION

A. Install products in accordance with manufacturer's instructions.
B. Mount devices where indicated and as scheduled in Section 16010 (Electrical: Basic Requirements).
C. See Section 16130 (Raceway and Boxes) for device outlet box requirements.
D. Where more than one receptacle is installed in an area, the receptacles shall be symmetrically arranged.
E. Provide blank plates for empty outlets.

END OF SECTION

SECTION 16265

VARIABLE FREQUENCY DRIVES - LOW VOLTAGE

PART 1 GENERAL

1.1 SUMMARY

A. Section Includes:
   1. Variable frequency drives (VFDs) for operation of 460 V AC, 3 PH, 60 HZ induction motors.

1.2 REFERENCES

A.	ANSI C62.41	Guide for Surge Voltages in Low Voltage AC Power Circuits
B.	ANSI C62.45	Guide on Surge Testing for Equipment Connected to Low Voltage AC Power Circuits
C.	IEEE 519	Recommended Practices and Requirements for Harmonic Control in Electrical Power Systems
D.	NEMA ICS 6	Enclosures for Industrial Controls and Systems
E.	NEMA MG-1	Motors and Generators
F.	NFPA 70	National Electrical Code
G.	UL 508	Electrical Industrial Control Equipment

1.3 SUBMITTALS

A. See Section 16010 (Electrical: Basic Requirements)
B. Product Data:
   1. Rated VFD input kVA and current.
   2. Rated output kVA and current.
   3. Overload current.
   4. Percent efficiency and power factor at 50, 75, and 100 percent speed.
   5. Maximum BTU heat release data and verification of the drive cooling requirements.
   6. Panel interior, and front and side exterior views, with details showing maximum overall dimensions of VFD and isolation transformer (if provided).
   7. Locations and sizes of electrical connections, ground terminations, and shielded wire usage.
   8. Identification and location of closest authorized service organization.
C. Quality Assurance/Control Submittals:
   1. Certificates:
      a. Submit with Shop Drawings:
         1) Manufacturer's experience.
         2) Compliance with "Factory Tests".
         3) That the VFD can withstand the same level of fault current as that imposed on the equipment feeding the VFD.
      b. Submit prior to shipment:
         1) From the VFD manufacturer and each VFD driven equipment manufacturer that the specific application has been reviewed and that the combination will satisfy the drive duties required with the actual motor furnished.
         2) That the testing described under "Factory Tests" in Part 2 has been successfully completed.

c. Submit after installation:
   1) That the critical frequency of the drive system has been identified and the VFD has been set to lockout these frequencies.
   2) Installation test reports that show:
      (a) Each VFD is operational.
      (b) Each VFD and its driven equipment motor is compatible.
      (c) Each VFD responds correctly to the input control signals.
   3) Schedule of actual settings of parameters in VFD. (Place in Installation, Operation, and Maintenance Manual.)

2. Manufacturer's Instructions:
   a. Troubleshooting procedures with a cross-reference between symptoms and corrective recommendations.
   b. Connection data to permit removal and installation of recommended smallest field-replaceable parts.

D. Installation, Operations and Maintenance Manuals:
   1. Each type and size of VFD.
   2. Listing of all parameter settings. (Default and site specific.)

1.4 QUALITY ASSURANCE

A. Qualifications:
   1. Provide drives that have the standard factory configuration of the variable speed drive listed and labeled by Underwriter's Laboratories, Inc. (UL), Canadian Standards Association (CSA), ETL Testing Laboratories (ETL), or that shall be capable of field inspection and subsequent field labeling by a UL-recognized field inspector. Where drives and controlling equipment are mounted in a custom enclosure, UL listed components shall be furnished.
   2. VFD Supplier shall maintain an authorized service organization within 300 miles of the Site.

B. Coordination:
   1. VFD manufacturer shall verify with the driven equipment manufacturer that the VFD and the drive motor are compatible and that the VFD will operate the driven equipment motor over its required operating range and will do so without exceeding the motor or VFD safety factors.
   2. VFD shall be supplied complete with all required control components.
      a. VFD manufacturer shall review the application and provide, at no additional cost to the Owner, the hardware and software necessary to allow the VFD to control the driven equipment motor over its required operating range. These may include, but are not limited to, analog and digital interface modules, communication interface modules, feeder circuit power output filters or chokes which may be required due to VFD to motor feeder length., switches, lights and other devices.
   3. Verify plan dimensions with equipment space requirements as indicated.
      a. Equipment which exceed the allotted maximum dimensions may not be acceptable.
      b. Equipment which reduces clear space below the minimums established by the NEC will not be acceptable.
   4. Contractor shall coordinate submittal with submittals from the motor manufacturer and the equipment manufacturer to provide concurrent submittals.

C. VFD manufacturer shall clearly identify conditions that will limit the operation of, or cause damage to, the VFD. These shall include, but are not limited to:
   1. Line side overvoltage.
   2. Line side voltage imbalance.
   3. Line side surge magnitude and duration.
   4. Location of VFD enclosure with respect to external cooling air flow.

1.5 MAINTENANCE

A. Provide list of manufacturer's recommended spare parts.
B. When not included in the recommended spare parts provide for each type and rating of drive:
   1. One set of 3 of each type power fuse.
   2. One set of 12 of each type control fuse.
C. Spare parts shall be labeled and packed in containers suitable for storage.
D. Spare parts utilized during pre-startup or startup and demonstration testing shall be immediately restocked, at no cost to the Owner.

PART 2 PRODUCTS

2.1 MANUFACTURERS

A. Subject to compliance with the Contract Documents, the following manufacturers are acceptable:
   1. Cutler-Hammer.
   2. Square D Company.
   3. Or Approved Equal.

2.2 TYPE OF DRIVE

A. Pulse-Width Modulated (PWM) type with IGBT transistors.

2.3 PERFORMANCE AND DESIGN REQUIREMENTS

A. Application:
   1. VFD(s) shall be of sufficient capacity and shall provide a quality output waveform for stepless motor control from 10 to 100 percent of base speed for (NEMA Design B squirrel cage induction motors or special purpose submersible pump squirrel cage induction motor.
   2. The drives shall be suitable for Constant Torque (CT) or Variable Torque (VT) applications. VFD manufacturer shall coordinate with the manufacturer of the driven equipment to identify CT and VT applications.
   3. VFDs shall be designed to operate successfully under the following conditions:
      a. Ambient:
         1) Temperature: 0-40 DegC.
         2) 95 percent non-condensing relative humidity.
      b. Elevation: 200 FT above MSL.
      c. Input power to VFD:
         1) 480 V AC (±10 percent).
         2) 3 PH, 60 HZ (±3 percent).
      d. Line voltage imbalance ±5 percent of rated voltage.

B. Performance:
   1. The VFD shall have the following capabilities:
      a. Voltage rating:
         1) 480 V AC, 3 PH, 60 HZ.
      b. Continuous current rating:
         1) 100 percent of rated VFD current shall be equal to or greater than the motor full load nameplate rating including motor service factor.
      c. Current overload capacity:
         1) VT: 110 percent for 1 min..
         2) CT: 150 percent for 1 min..
      d. Efficiency:
         1) 97 percent at full speed and full load.
         2) 93 percent at 1/2 speed and full load.
         3) Efficiency shall be determined excluding isolation transformer and input and output reactor losses.
      e. Power Factor:
         1) 94 percent at full speed and load.
      f. Frequency drift:
         1) ± 0.5 percent of set frequency.
      g. Speed regulation (motor dependent):
         1) 3 percent.
      h. Speed range:
         1) 10:1.
      i. Critical frequency lockout:
         1) Minimum of three.
      j. Continued operation with momentary voltage dips of 25 percent of rated voltage for a 4 second duration.
      k. Volts/Hertz ratio; constant over the entire operating range of the VFD except:
         1) When operating under voltage boost.
         2) At frequencies over 60 HZ.
      l. Automatic restart following a power outage.
      m. Spinning load restart: Synchronization of VFD starting frequency with spinning or coasting load.
      n. Load side contactor that opens when VFD is off.
   2. The VFD shall be supplied with line side and load side reactors:
      a. Minimum impedance:
         1) 3 percent.
      b. Current overload:
         1) 150 percent for 1 min.
      c. Insulation temperature rating:
         1) 180 DegC.
      d. Copper windings.
      e. Saturation current rating:
         1) 3.5 to 5 times rated current.
      f. Hi-potential rating:
         1) 2500 V AC line to ground and line to line, for 1 min.

g. Noise reducing:
   1) Epoxy over cast coil.
   2) Extra dips and bakes of varnish over continuous wound coil.

C. The VFD shall be provided with the following adjustments:
   1. Independent maximum and minimum speed.
   2. Independent linear acceleration and deceleration time.
   3. Volts/Hertz ratio.
   4. Voltage boost.
   5. Process follower gain, offset and bias.
   6. Torque limit.
   7. Overcurrent trip point.

D. The VFD shall have the power circuit designed such that the power circuit components are protected:
   1. Input protection:
      a. Line side molded case circuit breaker type disconnect.
         1) Fault current interrupting rating equal to or greater than the withstand or interrupting rating of the equipment feeding the VFD.
         2) Padlockable in the OFF position.
         3) Overcurrent and short circuit device per Section 16490 (Overcurrent and Short Circuit Protective Devices).
      b. Undervoltage trip:
         1) Auto restart.
         2) Ride through a momentary power dip, magnitude and duration as previously specified.
         3) Ride through a one cycle loss of power.
      c. Incoming line transient suppression.
      d. Loss of phase trip:
         1) Manual restart.
      e. Reverse phase trip:
         1) Manual restart.
      f. Overvoltage trip:
         1) Manual restart.
   2. Internal protection:
      a. Surge suppression and power device snubbers.
      b. Power devices rated at 2.5 times line voltage.
      c. Instantaneous overcurrent trip with manual reset.
      d. DC bus overvoltage trip with manual reset.
      e. Power device overtemperature trip with manual reset.
      f. Control logic circuit malfunction trip with manual reset.
   3. Output protection:
      a. Inverse-time overload trip:
         1) Manual restart.
      b. Overvoltage trip:
         1) Manual restart.
      c. Overfrequency trip:
         1) Manual restart.
      d. Short circuit trip:
         1) Line to line and line to ground.

2) Manual restart.
e. Ground fault trip:
1) Manual restart.

2.4 OPERATOR AND REMOTE CONTROL INTERFACE

A. Control circuits shall be 115 V AC supplied by CPT in the VFD.
1. CPT shall have minimum additional capacity of 60 VA greater than that required by control devices.
2. CPT shall have two fuses on the primary side and one fuse on the secondary side.
3. CPT shall have surge protection on the primary side independent of any other surge protection in the VFD.

B. Operator interface:
1. Door mounted sealed keypad, membrane type with LED or LCD display.
a. Messages shall be in English and engineering units.
b. Drive operating parameters shall be programmable.
c. Menu driven.
d. Password security.
e. Display fault and diagnostic data.
f. Operating parameters, fault and diagnostic data maintained in non-volatile memory with historic log of fault and diagnostic data.
g. Gold plated plug-in contacts.
2. Hand-Off-Auto control and speed reference selector switch.
3. Manual speed adjustment.
4. Manual start and stop control.
5. Indicating lights:
a. POWER ON.
b. VFD RUN.
c. VFD FAULT.
6. Speed indication:
a. Calibrated in percent.
b. Open-loop, function of VFD frequency.
7. Diagnostic indicators located externally on the face of the drive shall show the type of fault responsible for drive warning, shutdown or failure. On occurrence of more than one condition each shall be recorded or indicated by the diagnostics.

C. Remote Control Interface:
1. Computer interface via RS232/RS242 serial communications port:
a. Capability to:
1) Start-Stop VFD.
2) Control VFD Speed.
3) Access fault and diagnostic data.
2. Analog and discrete inputs:
a. Isolated process follower with offset, gain and span adjustment for accepting a remote 4-20 mA DC speed reference signal.
b. Drive disable permissive:
1) Per Section 13441 (Control Loop Descriptions).
3. Analog and discrete outputs:
a. 4-20 mA DC output for remote speed indication, as a function of frequency, calibrated 0 to 100 percent.

b. Drive FAULT contacts.
c. Drive RUNNING contacts.
d. Drive selector switch in REMOTE status contacts.

4. Contacts:
   a. Contacts shall be rated 2 A inductive at 120 V AC.
   b. All contacts shall be wired to terminal boards.

2.5 EQUIPMENT CONSTRUCTION

A. Fabrication and Assembly:
   1. Each VFD system shall be shop assembled in an enclosure for remote mounting, and shall utilize interchangeable plug-in printed circuit boards and power conversion components wherever possible. Shop assembly shall be performed by the VFD manufacturer or his authorized agent. Systems fabricated or assembled in whole or in part by parties other than the VFD manufacturer or his authorized agent will not be acceptable.
   2. Reactors shall be mounted within or in an ancillary enclosure adjacent to the drive enclosure, or with the Owner's permission may be mounted in a separate enclosure.
   3. Cooling fans shall be provided to run when drive is running.
   4. Enclosures for separately mounted VFD's:
      a. NEMA Type 3R.

B. Wiring:
   1. The wiring in the VFD shall be neatly installed in wire ways or with wire ties where wire ways are not practical. Where wire ties are used, the wire bundles are to be held at the back panel with a screw-mounted wire tie mounting base. Bases with a self-sticking back will not be allowed.
   2. All plug-in contacts shall be gold-plated.
   3. Terminal blocks shall be complete with marking strip, covers and pressure connectors. They shall be nonbrittle, interlocking, track-mounted type. Screw terminals will not be allowed. A terminal shall be provided for each conductor of external circuits plus one ground for each shielded cable. For free-standing panels, 8 IN of clearance shall be provided between terminals and the panel base for conduit and wiring space. Not less than 25 percent spare terminals shall be provided. Terminals shall be labeled to agree with identification indicated on the suppliers submittal drawings. Each control loop or system shall be individually fused, and all fuses or circuit breakers shall be clearly labeled and located for easy maintenance.
   4. All grounding wires shall be attached to the enclosure sheet metal with a ring tongue terminal. The surface of the sheet metal shall be prepared to assure good conductivity and corrosion protection.
   5. Wiring shall not be kinked or spliced and shall have markings on both ends or be color coordinated. Markings or color coordination shall comply with the manufacturer's drawings.
   6. With the exception of electronic circuits, all interconnecting wiring and wiring to terminals for external connection shall be stranded copper, insulated for not less than 600 V, with a moisture-resistant and flame-retardant covering rated for not less than 90 DegC.

C. Nameplates:
   1. All devices mounted on the face of the drive shall be provided with a suitable nameplate as specified in Section 10405 (Identification, Stenciling, and Tagging Systems). Push

buttons, selector switches, and pilot lights shall have the device manufacturer's standard legend plate. All other devices shall have an engraved, laminated plate. All lettering shall be a minimum of 3/16 IN high and shall be white or silver on a black background.
2. Relays, terminals and special devices inside the control enclosure shall have permanent markings to match identification used on manufacturer's wiring diagrams.
3. Use stainless steel screws to attach nameplates.

D. Painting: Equipment, after being phosphate washed, shall be thoroughly cleaned and given at least one coat of rust-inhibiting primer on all inner surfaces prior to fabrication.

2.6 SOURCE QUALITY CONTROL

A. Factory Tests:
1. Conduct all standard tests in accordance with NEMA and ANSI standards to ensure conformance to Specification requirements.
2. Prior to final assembly:
   a. Inspect incoming components.
   b. Test and inspect power devices.
   c. Circuit cards:
      1) Component and functional tests:
      2) Burn-in chamber or temperature cycling test.
      3) System test after burn-in, or temperature cycling.
3. After final assembly:
   a. Continuity and insulation test of 480 V AC circuits.
      1) Test voltage shall be 2500 V DC.
   b. Continuity and insulation test of 120 V AC circuits.
      1) Test voltage shall be 500 V DC.
   c. Drive tests:
      1) Burn-in complete drive at full load for 24 HRS.
      2) Verify all auxiliary circuits operation.
      3) Monitor output variables.
   d. Systems test:
      1) Provide inputs to field connections and simulate on-Site operation.
      2) Test all auxiliary equipment.

PART 3 EXECUTION

3.1 INSTALLATION

A. Install products in accordance with manufacturer's instructions and as indicated.
B. Verify the installed motor nameplate electrical requirements do not exceed the VFD capacity.
C. Provide services of manufacturer's representative to perform start-up services.

3.2 START UP

A. Pre-startup services:
1. Shall be completed a minimum of 30 Days prior to the startup and demonstration period.
2. Shall consist of:
   a. Physical and electrical installation check.
   b. Final adjustments and calibration of drive parameters.

c. VFD operation from simulated input signals.
3. Shall be complete when VFD(s) are fully operational.

B. Startup and demonstration services:
1. Supervise startup of all units including recheck of settings made during the pre-startup tests.
   a. Perform all Work in the presence of the Owner's designated representatives.
2. Simulate operation of the VFD and its associated control and instrumentation system in both the manual and automatic modes.
   a. Ensure compatibility of VFD with associated control and instrumentation signals.
3. Simulate VFD failures and demonstrate troubleshooting aids.
4. Instruct Owner's designated personnel:
   a. Minimum of 4 hours at the Site.
   b. Include both field and classroom instruction.
   c. Instructions shall include proper operation and maintenance procedures including, but not limited to:
      1) Lubrication.
      2) Troubleshooting.
      3) Repair and replacement.
      4) Parts inventory.
      5) Maintenance records.

3.3 SCHEDULE

A. Recycle Pump:

MOTOR HP	MIIMUM VFD OUTPUT, AMPS	REACTOR		MOUNTING	TYPE
		INPUT	OUTPUT		
150	207	Yes	Yes	Free Standing	18 Pulse

END OF SECTION

SECTION 16410

SAFETY SWITCHES

PART 1 GENERAL

1.1 REFERENCES

A.	NEMA 250	Enclosures for Electrical Equipment (1000 Volt Maximum)
B.	NEMA KS-1	Enclosed and Miscellaneous Distribution Equipment Switches
C.	NFPA 70	National Electrical Code (NEC)
D.	UL 98	Enclosed and Dead-Front Switches.

1.2 SUBMITTALS

A. See Section 16010 (Electrical: Basic Requirements).
B. Product Data:
   1. Associate safety switch type and rating with connect equipment tag number.
C. Installation, Operation and Maintenance Manuals:
   1. Safety switches.

PART 2 PRODUCTS

2.1 MANUFACTURERS

A. Subject to compliance with the Contract Documents, the following safety switch manufacturers are acceptable:
   1. Cutler-Hammer.
   2. General Electric Company.
   3. Square D Company.
   4. Siemens.
   5. Or Approved Equal.

2.2 SAFETY SWITCHES

A. General:
   1. Non-fusible or fusible as indicated.
   2. Suitable for service entrance when required.
   3. NEMA Type HD heavy-duty construction.
   4. Switch blades will be fully visible in the OFF position with the enclosure door open.
   5. Quick-make/quick-break operating mechanism.
   6. Deionizating arc chutes.
   7. Double-break rotary action shaft and switchblade shall be manufactured as one common component.
   8. Clear line shields to prevent accidental contact with line terminals.
   9. Operating handle:
      a. Red and easily recognizable.
      b. Padlockable in the OFF position
      c. Interlocked to prevent door from opening when the switch is in the ON position with a defeater mechanism.

B. Ratings:
   1. Horsepower rated of connected motor.
   2. Voltage and amperage: As indicated on Drawings.
   3. Short circuit withstand: Equal to or greater than the upstream equipment.
C. Enclosures:
   1. NEMA 4X rated (metallic):
      a. Body and cover: Type 304 or 316 stainless steel.
      b. No knockouts, external mounting flanges, hinged and gasketed door.
   2. NEMA 12 rated:
      a. Body and cover: Sheet steel finished with rust inhibiting primer and manufacturers standard paint inside and out.
      b. No knockouts, external mounting flanges, hinged and gasketed door.
D. Overcurrent and short circuit protective devices:
   1. Fuses.
   2. See Section 16490 (Overcurrent and Short Circuit Protective Devices) for overcurrent and short circuit protective device requirements.
E. Standards: NEMA KS-1, UL 98.

PART 3 EXECUTION

3.1 INSTALLATION

A. Install as indicated and in accordance with manufacturer's instructions and recommendations.
B. Switches shall be installed adjacent to the equipment they are intended to serve unless otherwise indicated on the Drawings.
C. Permitted uses of NEMA 4X metallic enclosure:
   1. Surface mounted in areas designated as wet and/or corrosive.
D. Permitted uses of NEMA 12 enclosure:
   1. Surface mounted in areas designated as dry in non-architecturally finished areas.

END OF SECTION

SECTION 16441

PANELBOARDS

PART 1 GENERAL

1.1 SUMMARY

A. Section Includes:
   1. Lighting and appliance panelboards.
   2. Power distribution panelboards.
   3. Panelboards mounted in Motor Control Centers.

1.2 REFERENCES

A.	NEMA 250	Enclosures for Electrical Equipment (1000 Volts Maximum)
B.	NEMA PB1	Panelboards
C.	UL 50	Cabinets and Boxes
D.	UL 67	Panelboards

1.3 SUBMITTALS

A. See Section 16010 (Electrical: Basic Requirements).
B. Shop Drawings:
   1. Panelboard layout with alphanumeric designation, branch circuit breakers size and type, as indicated in the panelboard schedules.
C. Installation, Operation, and Maintenance Manual:
   1. Panelboards.
   2. Panelboard breakers.

PART 2 PRODUCTS

2.1 MANUFACTURERS

A. Subject to compliance with the Contract Documents, the following manufacturers are acceptable:
   1. Cutler-Hammer.
   2. General Electric Company.
   3. Square D Company.
   4. Siemens.
   5. Or Approved Equal.

2.2 MANUFACTURED UNITS

A. Standards: NEMA PB 1, NFPA 70, UL 50, UL 67.
B. Ratings as follows unless otherwise indicated:
   1. Current, voltage, number of phases, number of wires as indicated.
   2. Panelboards rated 240 V AC or less: 10,000 amp minimum short circuit rating.
   3. Panelboards rated 480 V AC: 14,000 amp minimum short circuit rating.
C. Construction:
   1. Service entrance rated as indicated.
   2. Interiors factory assembled and designed such that switching and protective devices can be replaced without disturbing adjacent units and without removing the main bus connectors.

3. Multi-section panelboards: Feed-through or sub-feed lugs.
4. Main lugs: Solderless type approved for copper and aluminum wire.

D. Bus bars:
1. Main bus bars: Copper sized to limit temperature rise to a maximum of 65 DegC above an ambient of 40 DegC. Drilled and tapped and arranged for sequence phasing of the branch circuit devices.
2. Ground bus and isolated ground bus, when indicated: Solderless mechanical type connectors.
3. Neutral bus bars: Insulated 100 percent rated or 200 percent rated, when indicated on the Drawings and with solderless mechanical type connectors.

E. Enclosure:
1. Boxes: Code gage galvanized steel, furnish without knockouts.
2. Trim assembly: Code gage steel finished with rust inhibited primer and manufacturers standard paint inside and out.
3. Lighting and appliance panelboard:
   a. Trims supplied with hinged door over all circuit breaker handles.
   b. Trims for surface mounted panelboards, same size as box.
   c. Trims for flush mounted panelboards, overlap the box by 3/4 IN on all sides.
   d. Doors lockable with corrosion resistant chrome-plated combination lock and catch, all locks keyed alike.
   e. Nominal 20 IN wide and 5-3/4 IN deep with gutter space in accordance with NEC.
   f. Clear plastic cover for directory card mounted on the inside of each door.
   g. NEMA 3R or 12 rated: Door gasketed.
4. Power distribution panelboard:
   a. Trims cover all live parts with switching device handles accessible.
   b. Less than or equal to 12 IN deep with gutter space in accordance with NEC.
   c. Clear plastic cover for directory card mounted front of enclosure.
   d. NEMA 3R or 12 rated: Doors gasketed and lockable with corrosion resistant chrome-plated combination lock and catch, all locks keyed alike.
5. Overcurrent and short circuit protective devices:
   a. Main overcurrent protective device:
      1) Molded case circuit breaker.
   b. Branch overcurrent protective devices:
      1) Mounted molded case circuit breaker.
   c. See Section 16490 (Overcurrent and Short Circuit Protective Devices) for overcurrent and short circuit protective device requirements.
   d. Factory installed.

F. Integral surge protective device: See Section 16491 (Low Voltage Surge Protection Devices (SPD)).

PART 3 EXECUTION

3.1 INSTALLATION

A. Install as indicated, in accordance with the NEC, and in accordance with manufacturer's instructions.
B. Support panelboard enclosures from wall studs or modular channels support structure, per Section 16010 (Electrical: Basic Requirements).
C. Provide NEMA 1, 3R or 12 rated enclosure as indicated.

D. Provide panelboard labeling as specified in Section 16010 (Electrical: Basic Requirements).
E. Provide each panelboard with a typed directory:
   1. Identify all circuit locations in each panelboard with the load type and location served.
   2. Mechanical equipment shall be identified by Owner-furnished designation if different than designation indicated.
   3. Room names and numbers shall be final building room names and numbers as identified by the Owner if different than designation indicated.

END OF SECTION

SECTION 16442

MOTOR CONTROL EQUIPMENT

PART 1 GENERAL

1.1 SUMMARY

A. Section Includes:
   1. Motor control centers.
   2. Separately mounted motor starters (including those supplied with equipment).
   3. Manual motor starters.
   4. Arc flash calculations and labels.

1.2 REFERENCES

A.	NEMA 250	Enclosures for Electrical Equipment (1000 Volt Maximum)
B.	NEMA ICS 1	Industrial Control Devices, Controllers, and Assemblies
C.	UL 508	Industrial Control Equipment
D.	UL 845	Electric Motor Control Centers

1.3 SUBMITTALS

A. See Section 16010 (Electrical: Basic Requirements).
B. Shop Drawings:
   1. Front elevation and plan drawing of the assembly.
   2. Conduit space locations within the assembly.
   3. Single line drawing.
   4. Unit wiring diagrams for motor starter controls.
   5. Starter and component schedule.
   6. Typical control power transformer size calculation for each starter size.
   7. Discrepancies between equipment sizes on drawing and actual installed equipment.
C. Quality Assurance/Control Submittals:
   1. Test Reports:
      a. Ground fault protection system test report signed by the supervising electrical foreman.
D. Installation, Operation, and Maintenance Manual:
   1. Motor control center.
   2. Starters.
   3. Relays.
   4. Circuit breakers.
   5. Control devices.

1.4 QUALITY ASSURANCE

A. Verify motor horsepower loads, other equipment loads, and controls from approved Shop Drawings and notify Owner of any discrepancies.
B. Verify the required instrumentation and control wiring for a complete system and notify Owner of any discrepancies.

PART 2 PRODUCTS

2.1 MANUFACTURERS

A. Subject to compliance with the Contract Documents, the following manufacturers are acceptable:
   1. Allen-Bradley
   2. Cutler Hammer.
   3. General Electric Company.
   4. Square D Company.
   5. Siemens.
   6. Or Approved Equal.

2.2 MOTOR CONTROL CENTERS

A. Ratings:
   1. 600 Volt class, 3 phase, 60 hertz with operating voltage and number of wires as indicated.
   2. Short circuit withstand rating: 65 KAIC symmetrical unless otherwise indicated.
B. Construction:
   1. Standards: UL 845.
   2. Totally enclosed, dead front, free standing assemblies. Bolted together to form a single assembly.
   3. Fabricate of not less than 14 GA steel with 16 GA steel doors in standardized units.
   4. Nominal size per section: 20 IN wide, 20 IN deep, and 90 IN high.
   5. Enclosure:
      a. NEMA 12:
         1) Dust-tight and drip-proof.
         2) Gasketed material round all doors, door cutouts, cover plates, side, top and back sheets.
         3) Gasketed bottom plate.
      b. NEMA 3R non-walk-in:
         1) Rainproof and sleet resistant.
         2) NEMA 1 gasketed enclosure with an outdoor house erected around it.
   6. Horizontal wireways:
      a. At the top, isolated from the main bus
      b. At the bottom.
      c. Easily accessible.
      d. Full length of the MCC.
   7. Vertical wireway:
      a. Located in each MCC section that accepts plug-in units.
      b. Connect to top and bottom wireways.
      c. Isolated from the unit interiors.
      d. Accessible through a separate hinged door.
      e. Cable tie supports to hold wiring in place.
   8. Unit doors:
      a. Formed round corners and rolled edges.
      b. Minimum of two heavy-duty hinges or continuous piano hinge.
      c. Held closed by means of captive fasteners.
      d. Fabricate to be a part of the structure and not part of the starter.

9. Unit cubicles:
   a. Draw-out type for motor starters through NEMA Size 5.
   b. Guide rails for supporting and aligning starters.
   c. Operating handle:
      1) With the unit stabs engaged and door closed the handle mechanism allows complete ON/OFF control of the unit disconnect and clear indication of the disconnect status.
      2) Circuit breaker and MCP operators includes a separate TRIPPED position.
      3) Mechanical interlock to prevent the opening of the door when the disconnect is in the ON position with a defeater mechanism.
      4) Mechanical interlock to prevent the placement of the disconnect in the ON position with the door open with a defeater mechanism.
      5) Non-defeatable interlock to prevent the installation or removal of a unit unless the disconnect is in the OFF position.
      6) Padlockable in the OFF position.
   d. Control panel:
      1) Provide control devices as indicated per Section 16493 (Control Equipment Accessories), the following devices are the minimum required.
         (a) Three position switch (hand-off-auto).
         (b) Red ON indicator light.
         (c) Green OFF indicator light.
   e. Control Power:
      1) Control power transformer:
         (a) 120 Volt secondary.
         (b) Fused on primary and secondary side.
         (c) Sized for 140 percent of required load.
   f. Minimum of one full size space unit (12 IN) for any combination magnetic motor starter or starter without overload relay.
   g. One-half full size space unit (6 IN) for circuit breakers 100 A and less.
   h. Effectively baffled to isolate any ionized gases which may occur within unit starter.
10. Externally mounted overload relay pushbutton.
11. Assemblies effectively ventilated to allow relocation of starters and other components:
    a. Within the assembly and with the same load.
    b. Without having to compensate for changes in location.
12. Finish: Rust inhibited primer and manufacturers standard paint inside and out.
13. Provide ample unrestricted space for conduit entry from the bottom.
14. Wiring: NEMA Class I, Type B.
15. Labeled for Seismic Zone 4.

C. Buses:
   1. Material: Silver-plated copper.
   2. Main horizontal bus:
      a. 600 A unless otherwise indicated.
      b. Extend the full-length of the MCC with provisions for splicing additional sections to either end.
   3. Vertical buses
      a. 300 A minimum.
      b. Securely bolted to the horizontal main bus with joint easily accessible for maintenance.

c. Completely isolated and insulated by means of a barrier.
d. Extended full length of vertical section to distribute incoming power to each circuit breaker and starter in structure. Starters NEMA size 5 and larger and certain other components may be cable connected to the main bus with the approval of the Engineer.
e. Extend Vertical bus to spaces provided for future equipment.

4. Ground bus:
   a. Extend the full-length of the MCC with provisions for splicing additional sections to either end.
   b. 1/4 x 2 IN, 300 A tin-plated copper.
   c. Solidly grounded to each structure.
   d. Locate near bottom of structure.
   e. Provide for lug connection of equipment ground wires.

D. Overcurrent and Short Circuit Protective Devices:
   1. Main device:
      a. Molded case circuit breaker.
   2. Feeder devices:
      a. Molded case circuit breaker.
   3. Motor protection with full voltage starters:
      a. Motor circuit protector.
   4. Motor protection with VFD:
      a. Molded case circuit breaker.
   5. See Section 16490 (Overcurrent and Short Circuit Protective Devices) for overcurrent and short circuit protective device requirements.
   6. Factory installed.

E. Motor Starters: See requirements within this section.

F. Surge protective device: Integrally mounted, see Section 16491 (Low Voltage Surge Protection Devices (SPD)).

2.3 SEPARATELY MOUNTED COMBINATION STARTERS

A. Standards:
   1. NEMA 250, ICS 2.
   2. UL 508.

B. Enclosure:
   1. NEMA 4X rated:
      a. Body and cover: Type 304 or 316 stainless steel.
      b. No knockouts, external mounting flanges, hinged and gasketed door.
   2. NEMA 12 rated:
      a. Body and cover: Sheet steel finished with rust inhibiting primer and manufacturers standard paint inside and out.
      b. No knockouts, external mounting flanges, hinged and gasketed door.

C. Operating Handle:
   1. With the door closed the handle mechanism allows complete ON/OFF control of the unit disconnect and clear indication of the disconnect status.
   2. Circuit breaker and MCP operators includes a separate TRIPPED position.
   3. Mechanical interlock to prevent to prevent the opening of the door when the disconnect is in the ON position with a defeater mechanism for use by authorized personnel.

4. Mechanical interlock to prevent the placement of the disconnect in the ON position with the door open with a defeater mechanism for use by authorized personnel.
5. Padlockable in the OFF position.
6. Exceptions: NEMA 7 and 9 enclosures.

D. External mounted overload relay pushbutton.

E. Control Devices:
1. Provide control devices as indicated on the Drawings.
2. Devices will be accessible with the door closed.

F. Control Power Transformer:
1. 120V secondary.
2. Fused on primary and secondary side.
3. Sized for 140 percent of required load.

G. Fault current withstand rating: Equal to the rating of the electrical gear from which it is fed.

H. Motor Starters: See requirements within this section.

I. Overcurrent and Short Circuit Protective Devices:
1. Motor protection with full voltage starters:
   a. Motor circuit protector.
2. Motor protection with reduced voltage starters:
   a. Molded case circuit breaker.
3. See Section 16490 (Overcurrent and Short Circuit Protective Devices) for overcurrent and short circuit protective device requirements.
4. Factory installed.

2.4 MOTOR STARTERS, IF SHOWN

A. Standards:
1. NEMA ICS 2.
2. UL 508.

B. Full Voltage Non-Reversing (FVNR) Magnetic Starters:
1. NEMA full size rated contactor.
   a. NEMA half sizes and IEC contactors are not permitted.
2. Double-break silver alloy contacts.
3. Overload relays:
   a. Ambient compensated, bimetallic type with interchangeable heaters, +/-24 percent adjustability, single phase sensitivity, an isolated arm contact and manual reset.
   b. Ambient insensitive, adjustable solid state type with phase loss protection, phase imbalance protection and manual reset.
4. Interlock and auxiliary contacts, wired to terminal blocks:
   a. Holding circuit contact, normally open.
   b. Overload alarm contact, normally open.
   c. Normally open auxiliary contact, for remote run status.
   d. Additional field replaceable auxiliary contacts as required per the Sequence of Operation.
   e. Two additional normally open spare field replaceable auxiliary contacts.

2.5 MANUAL MOTOR STARTERS, IF SHOWN

A. Standards:
1. NEMA 250, ICS 2.
2. UL 508.

B. Quick-make, quick-break toggle mechanism that is lockable in the OFF position.

C. Types:
   1. Horsepower rated, for ON/OFF control.
   2. Horsepower rated, for ON/OFF control and thermal overload protection. Switch to clearly indicate ON, OFF, and TRIPPED position.
D. Voltage and current ratings and number of poles as required for the connected motor.
E. Enclosures:
   1. NEMA 4X rated:
      a. Type 304 or 316 stainless steel.
      b. No knockouts, external mounting flanges.
   2. NEMA 12 rated:
      a. Body and cover: Sheet steel finished with rust inhibiting primer and manufacturers standard paint inside and out.
      b. No knockouts, external mounting flanges.

2.6 SYSTEM ARC FLASH REPORT

A. The report shall begin at existing Switchboard SWBD-2 and include MCC-R.
B. The report shall include the following at a minimum:
   1. Arcing fault clearing time.
   2. Arc flash protection, prohibited, restricted and limited approach boundaries per NFPA 70E.
   3. Individual arcing current contributions.
C. The report shall assign hazard categories based on NFPA 70E.
D. Arc flash labels shall be provided for and affixed to MCC-R showing hazard category and PPE requirements.

PART 3 EXECUTION

3.1 INSTALLATION

A. Install as indicated and in accordance with manufacturer's recommendations and instructions.
B. Mounting height for surface mounted equipment: See Section 16010 (Electrical: Basic Requirements).
C. Mount MCC on 4 IN high concrete pad:
   1. Install two 4 IN wide channel sills flush in pads to support and maintain alignment of the MCC.
   2. Align front of MCC with top edge of pad chamfer.
D. Overload Heaters:
   1. Size for actual motor full load current of the connected motor.
   2. For motors with power factor correction capacitors, size to compensate for the capacitors effect on load current.
E. Combination and Manual Starter Enclosures:
   1. Permitted uses of NEMA 4X enclosure:
      a. Surface mounted in areas designated as wet and/or corrosive.
   2. Permitted uses of NEMA 12 enclosure:
      a. Surface mounted in areas designated as dry.

3.2 FIELD QUALITY CONTROL

A. Test the ground fault protection system as indicated in Section 16490 (Overcurrent and Short Circuit Protective Devices).

END OF SECTION

SECTION 16460

DRY-TYPE TRANSFORMERS

PART 1 GENERAL

1.1 SUMMARY

A. Section Includes:
   1. Dry-type transformers, 1000 kVA and less.

1.2 REFERENCES

A.	ANSI C57.96	Loading Dry-Type Distribution and Power Transformers
B.	ANSI C89.2	Dry-type Transformers for General Applications
C.	NEMA ST 20	Dry-type Transformers for General Applications
D.	UL 506	Specialty Transformers
E.	UL 1561	Dry-type General Purpose and Power Transformers

1.3 SUBMITTALS

A. See Section 16010 (Electrical: Basic Requirements).
B. Product Data:
   1. UL nameplate data
C. Quality Assurance/Control Submittals:
   1. Certificates:
      a. Sound level certifications
D. Installation, Operation, and Maintenance Manual:
   1. DM type transformers.

PART 2 PRODUCTS

2.1 MANUFACTURERS

A. Subject to compliance with the Contract Documents, the following manufacturers are acceptable:
   1. Cutler-Hammer.
   2. General Electric Company.
   3. Square D Company.
   4. Siemens.
   5. Sola/Hevi-Duty.
   6. Or Approved Equal.

2.2 GENERAL PURPOSE DRY-TYPE TRANSFORMERS

A. Ventilated or non-ventilated, air cooled, two winding type.
B. Cores: High grade, non-aging silicon steel with high magnetic permeability, and low hysteresis and eddy current losses. Magnetic flux densities are to be kept well below the saturation point.
C. Coils: Continuous wound with electrical grade aluminum.
D. Non-ventilated Units:
   1. Core and coil assembly encapsulated in a proportioned mixture of resin and aggregate to provide a moistureproof, shock resistant seal.
   2. Totally enclosed, NEMA 3R, steel enclosure finished with a weather-resistant enamel.

E. Ventilated Units:
   1. Core and coils assembly impregnated with non-hygroscopic, thermosetting varnish and cured to reduce hot spots and seal out moisture and completely isolated from the enclosure by means of vibration dampening pads.
   2. Dripproof, NEMA 1, steel enclosure finished with a weather-resistant enamel and ventilation openings protected from falling dirt.
F. Furnish Taps for Transformers as Follows:
   1. 1 PH, 2 kVA and below: None.
   2. 1 PH, 3 to 25 kVA: Two 5 percent FCBN.
   3. 1 PH, 25 kVA and above: Two 2.5 percent FCAN and four 2.5 percent FCBN.
   4. 3 PH, 3 to 15 kVA: Two 5 percent FCBN.
   5. 3 PH, 15 kVA and above: Two 2.5 percent FCAN and four 2.5 percent FCBN.
G. Sound Levels: Manufacturer shall guarantee not to exceed the following:
   1. Up to 9 kVA: 40 dB.
   2. 10 to 50 kVA: 45 dB.
   3. 51 to 150 kVA: 50 dB.
   4. 151 to 300 kVA: 55 dB.
H. Insulating Material (600 V and below):
   1. 3 to 15 kVA units: 185 DegC insulation system with a 115 DegC rise.
   2. 15 kVA and above units: 220 DegC insulation system with a 150 DegC rise.
I. Ratings: 60 Hertz, Voltage, KVA and phase, as indicated.
J. Finish: Rust inhibited primer and manufacturers standard paint inside and out.
K. Standards: ANSI C57.96, ANSI C89.2, NEMA ST 20, UL 506, UL 1561.
L. Special provisions, when indicated:
   1. K-Factor rated:
      a. Suitable for circuits with a harmonic profile equal to or less than a K-factor of 4 or 13 without exceeding the temperature rise.
      b. Neutral conductor and lugs rated for 200 percent of normal phase current.
   2. Electrostatic shielded transformer: Shield consisting of a single turn of a thin sheet of aluminum or copper, extending over the full width of the windings, placed between the primary and secondary winding and grounded.
   3. Isolation transformer: Primary and secondary windings electrically isolated from each.
   4. Shielded isolation transformer: Incorporates both the electrostatic shield and isolation features as described above.

PART 3 EXECUTION

3.1 INSTALLATION

A. Install products in accordance with manufacturer's instructions.
B. Indoor Locations:
   1. Provide ventilated type for 15 kVA units and above.
   2. Provide non-ventilated type for 9 kVA units and below and where indicated.
   3. Mount 9 kVA units and below on wall.
   4. Mount 15 kVA units and above on chamfered 4 IN high concrete housekeeping pad or from wall and/or ceiling, at 7 FT above finished floor, using equipment support brackets per Section 16010 (Electrical: Basic Requirements).
   5. Provide rubber vibrations isolation pads.

C. Outdoor Locations:
   1. Mount non-ventilated type on concrete pad for units weighting greater than 400 LBS and mount units weighting less than 400 LBS on channel support structure per detail on Drawings.
   2. Mount in MCC where shown.
D. Enclosures: Painted steel in all areas except stainless steel in highly corrosive areas.
E. Ground in accordance with Section 16065 (Grounding).

END OF SECTION

SECTION 16490

OVERCURRENT AND SHORT CIRCUIT PROTECTIVE DEVICES

PART 1 GENERAL

1.1 SUMMARY

A. Section Includes:
   1. Low voltage circuit breakers.
   2. Low voltage fuses.

1.2 REFERENCES

A. IEEE 242	Protection and Coordination of Industrial and Commercial Power Systems (Buff Book)
B. IEEE 399	Power System Analysis (Brown Book)
C. NEMA AB1	Molded Case Circuit Breakers
D. UL 489	Molded Case Circuit Breakers and Circuit Breaker Enclosures
E. UL 943	Ground Fault Circuit Interrupters

1.3 SUBMITTALS

A. See Section 16010 (Electrical: Basic Requirements).
B. Product Data:
   1. Descriptive literature on all equipment proposed.
C. Installation, Operation, and Maintenance Manual:
   1. Circuit breakers.
   2. Fuses.

PART 2 PRODUCTS

2.1 MANUFACTURERS

A. Subject to compliance with the Contract Documents, the following manufacturers are acceptable:
   1. Circuit breakers:
      a. Cutler-Hammer.
      b. General Electric Company.
      c. Square D Company.
      d. Siemens.
      e. Or Approved Equal.
   2. Fuses:
      a. Bussmann, Inc.
      b. Littlefuse, Inc.
      c. Gould Shawmut.
      d. Or Approved Equal.

2.2 CIRCUIT BREAKERS

A. Molded case type:
   1. General:
      a. Standards: NEMA AB 1, UL 489.

b. Unit construction.
c. Over-center, toggle handle operated.
d. Quick-make, quick-break, independent of toggle handle operation.
e. Manual and automatic operation.
f. All poles open and close simultaneously.
g. Three position handle: on, off and tripped.
h. Molded-in ON and OFF markings on breaker cover.
i. One-, two- or three-pole as indicated.
j. Current and interrupting ratings as indicated.
k. Bolt on type.

2. Thermal magnetic type:
   a. Inverse time overload and instantaneous short circuit protection by means of a thermal magnetic element.
   b. Frame size 150 amp and below:
      1) Non-interchangeable, non-adjustable thermal magnetic trip units.
   c. Frame sizes 225 to 250 amp:
      1) Interchangeable and adjustable instantaneous thermal magnetic trip units.
   d. Ground Fault Circuit Interrupter (GFCI) Listed:
      1) Standard: UL 943.
      2) One- or two-pole as indicated.
      3) Class A ground fault circuit.
      4) Trip on 5 mA ground fault (4-6 mA range).
   e. HACR listed:
      1) Heating, air conditioning and refrigeration applications.
3. Solid state trip type:
   a. Inverse time overload, instantaneous short circuit and ground fault protection by means of a solid state trip element, associated current monitors and flux shunt trip mechanism.
   b. Frame size 400 amp and above:
      1) Interchangeable current sensor or rating plug:
      2) Adjustable long time pickup setting. Adjustable from 50 to 100 percent of the current sensor or rating plug.
      3) Adjustable short time pickup setting.
      4) Adjustable instantaneous pick-up.
      5) Fixed ground fault pickup.
4. Motor circuit protector:
   a. Adjustable instantaneous short circuit protection by means of a magnetic or solid state trip element.
   b. Sized for the connected motor.

PART 3 EXECUTION

3.1 INSTALLATION

A. Current and interrupting ratings as indicated.
B. Series rated systems not acceptable.
C. Devices shall be ambient temperature compensated.
D. Molded case circuit breakers shall incorporate the following, unless otherwise indicated:
   1. Frame sizes 250 amp and less shall be thermal magnetic type.

2. Frame sizes 400 amp and larger shall be solid state trip type.
   a. Current sensor or rating plugs long time pickup setting shall be set so that the indicated trip level is near the 75 percent trip point.
3. Motor circuit protectors sized for the connected motor.

3.2 FIELD QUALITY CONTROL

A. Adjustable Circuit Breakers:
   1. Set all circuit breaker adjustable taps as defined on the Drawings.
   2. Test and verify all circuit breaker trip functions using a test set provided by the manufacturer for that purpose for circuit breakers 1200 A and above.

END OF SECTION

SECTION 16491

LOW VOLTAGE SURGE PROTECTIVE DEVICES (SPD)

PART 1 GENERAL

1.1 SUMMARY

A. Section Includes:
   1. Type 1 SPD - Service Entrance equipment locations switchgear, switchgear, panelboards or motor control centers), integrally mounted.

1.2 REFERENCES

A. IEEE C62.41	Recommended Practice on Surge Voltages in Low-Voltage AC Power Circuits
B. IEEE C62.45	Guide on Surge Testing For Equipment Connected to Low-Voltage AC Power Circuits
C. NEMA LS 1	Low Voltage Surge Protective Devices
D. UL 497B	Standard for Safety - Protectors for Data Communication and Fire Alarm Circuits
E. UL 1283	Standard for Safety - Electromagnetic Interference Filters
F. UL 1363	Standard for Safety - Relocatable Power Taps
G. UL 1449	Standard for Safety - Transient Voltage Surge Suppressors

1.3 DEFINITIONS

A. Clamping Voltage: The applied surge shall be induced at the 90 degree phase angle of the applied system frequency voltage. The voltage measured at the end of the 6 IN output leads of the SPD and from the zero voltage reference to the peak of the surge.
B. Let-Through Voltage: The applied surge shall be induced at the 90 degree phase angle of the applied system frequency voltage. The voltage measured at the end of the 6 IN output leads of the SPD and from the system peak voltage to the peak of the surge.
C. Maximum Continuous Operating Voltage (MCOV): The maximum steady state voltage at which the SPD device can operate and meet it specification within its rated temperature.
D. Maximum Surge Current: The maximum 8 x 20 microsecond surge current pulse the SPD device is capable of surviving on a single-impulse basis without suffering either performance degradation or more than 10 percent deviation of clamping voltage at a specified surge current. Listed by mode, since number and type of components in any SPD may very by mode.
E. MCC: Motor Control Center.
F. Protection Modes: This parameter identifies the modes for which the SPD has directly connected protection elements, i.e. line-to-neutral (L-N), line-to-line (L-L), line-to-ground (L-G), neutral-to-ground (N-G).
G. Surge Current per Phase: The per phase rating is the total surge current capacity connected to a given phase conductor. For example, a wye system surge current per phase would equal L-N plus L-G; a delta system surge current per phase would equal L-L plus L-G. The N-G mode is not included in the per phase calculation.
H. System Peak Voltage: The electrical equipment supply voltage sine wave peak (i.e. for a 480/277 volt system the L-L peak voltage is 679V and the L-N peak voltage is 392V).

1.4 SUBMITTALS

A. See Section 16010 (Electrical: Basic Requirements).
B. Product Data:
   1. Manufacturer's experience.
   2. Electrical and mechanical drawing showing unit dimensions, weights, mounting provisions, connection details and layout diagram of the unit.
   3. SPD:
      a. UL 1449 product listing data.
      b. Signed and Certified Clamping Voltage data from a third party testing laboratory, including oscilloscope waveform snapshots for the indicated IEEE C62.41 Category waveforms. Testing shall be in accordance with IEEE C62.45. Clearly identify the voltage reference level.
      c. Signed and Certified spectrum analysis from a third part testing laboratory verifying the device meets the indicated noise attenuation. Testing shall be in accordance with MIL-STD-220A.
      d. Signed and Certified Surge Current data from a third party testing laboratory.
      e. Signed and Certified Repetitive Surge Current data from a third party testing laboratory.
C. Installation, Operation, and Maintenance Manual:
   1. Surge Protection Devices.

1.5 QUALITY ASSURANCE

A. Qualifications:
   1. Provide devices for a manufacturer who has been regularly engaged in the development, design, testing, listing and manufacturing of SPDs of the types and ratings required for a period of ten years or more and whose products have been in satisfactory use in similar service. Upon request, suppliers or manufacturers shall provide a list of not less than three customer references showing satisfactory operation.

1.6 WARRANTY

A. Provide manufacturer's 5-year Limited Warranty from date of shipment against failure when installed in compliance with applicable national/local electrical codes and the manufacturer's installation, operation and maintenance instructions.

PART 2 PRODUCTS

2.1 TYPE 1 SPD

A. Product:
   1. Integrally mounted in switchgear, switchboards or MCCs.
   2. Hybrid solid-state high performance suppression system. Do not use a suppression system with gas tubes, spark gaps or other components which might short or crowbar the line resulting in interruption of normal power flow to connected loads.
   3. Do not connect multiple SPD modules in series to achieve the specified performance.
   4. Designed for parallel connection.
   5. Field connection: Use mechanical or compression lugs for each phase, neutral and ground that will accept bus bar or #10 through #1/0 conductors.
   6. Device Monitor: Provide long-life, solid state, externally visible indicators and Form C dry contact(s) that monitors the on-line status of each mode of the units suppression

filter system and power loss in any of the phases. A fuse status only monitor system is not acceptable.

7. Test reports shall represent the installed SPD, including any internal fusing and 6 IN lead length.

B. Operating Voltage: The nominal unit operating voltage and configuration as indicated.

C. Modes of Protection: All modes.
   1. Three phase (delta): L-L, L-G.
   2. Three phase (wye): L-N, L-L, L-G and N-G.
   3. Single phase (2 pole): L-L, L-N, L-G and N-G.
   4. Single phase: L-N, L-G and N-G.

D. Maximum Continuous Operating Voltage: Less than 130 percent of system peak voltage.

E. Operating Frequency: 45 to 65 Hertz.

F. Maximum Surge Current: 250,000A per phase, 125,000A per mode minimum.

G. Minimum Repetitive Surge Current Capacity: 5000 impulses with no degradation greater than 10 percent deviation of the clamping voltage.

H. Fusing: The SPD may contain internal fuses, but a C3 or B3 combination wave shall not cause the fuse to open the circuit to the SPD circuitry.

I. Maximum Clamping Voltages, including 6 IN lead length and measured from the zero voltage reference:
   1. ANSI/IEEE C3 combination wave: 500 percent of system peak voltage.
   2. ANSI/IEEE B3 combination wave: 350 percent of system peak voltage.
   3. Mode N-G clamping voltage may be 175 percent higher than the L-G levels.

J. EMI-RFI Noise Rejection: Provide attenuation greater than 55 dB for frequencies between 100 kHz and 100 MHz.

PART 3 EXECUTION

3.1 INSTALLATION

A. Install products in accordance with manufacturer's instructions.

B. Type 1 SPD
   1. Connected in parallel to the equipment.
   2. Install in dedicated service equipment compartment or bucket at the factory before shipment.
   3. Provide leads that are as short and straight as possible.
   4. Maximum lead length: 12 IN.
   5. Minimum lead size: #2 stranded AWG or bus bar.
   6. Connect leads to the service equipment bus through a 40A circuit breaker if the SPD is not internally fused or molded case switch or knife blade type switch.
      a. Provide circuit breaker or switch operable from the service equipment exterior or from behind a hinged door.

END OF SECTION

SECTION 16493

CONTROL EQUIPMENT ACCESSORIES

PART 1 GENERAL

1.1 SUMMARY

A. Section Includes:
1. Operator control devices (selector switches, pushbuttons, indicator lights, etc.).
2. Control devices (timers, relays, contactors, etc.).
3. Control panels and operator stations.

1.2 REFERENCES

A. NEMA ICS 2	Industrial Control Devices, Controllers, and Assemblies
B. NEMA 250	Enclosures for Electrical Equipment (1000 Volt Maximum)
C. UL 508	Industrial Control Equipment

1.3 SUBMITTALS

A. See Section 16010 (Electrical: Basic Requirements).
B. Installation, Operation, and Maintenance Manual:
1. Control Devices.

PART 2 PRODUCTS

2.1 MANUFACTURERS

A. Subject to compliance with the Contract Documents, the following manufacturers are acceptable:
1. Pilot Devices:
   a. Cutler Hammer.
   b. Allen Bradley.
   c. Or Approved Equal.
2. Relays:
   a. Idec.
   b. Potter & Brumfield.
   c. Allen-Bradley.
   d. Or Approved Equal.
3. Terminal Blocks:
   a. Phoenix Contact.
   b. Allen-Bradley.
   c. Or Approved Equal.
4. Enclosures:
   a. Hoffman Engineering Co.
   b. Wiegmann.
   c. B-Line Circle AW.Adalet.
   d. Or Approved Equal.

2.2 PILOT DEVICES

A. General Requirements:
1. Standards: NEMA ICS 2, UL 508.

2. Heavy-duty NEMA 4/13 watertight/oiltight.
3. Heavy-duty NEMA 4/4X corrosion resistant.
4. Heavy-duty factory sealed, explosion-proof and dust ignition-proof (Class I and II).
5. Mounting hole: 30.5 mm.
6. Contact blocks: 10 amp, NEMA A600 rated, number as required to fulfill functions shown or specified.
7. Legend plate marked as indicated or specified.

B. Selector Switches:
1. Two, three- or four-position rotary switch as required to fulfill functions shown or specified.
2. Maintained contact type.
3. Knob or lever type operators.

C. Pushbuttons:
1. Non-illuminated type:
a. Protective boot.
b. Momentary contact.
c. Standard flush and mushroom operators.
d. Red colored buttons for START or ON and green color for STOP or OFF.
e. Emergency stop pushbuttons: Mushroom head operator and maintained contact.
2. Illuminating type:
a. Protective boot.
b. Momentary contact.
c. Standard flush operator.
d. Serves as both pushbutton control and indicating light.
e. Red colored lenses for START or ON and green color for STOP or OFF.
f. LED light unit with lens and panel gasket.

D. Indicating Lights:
1. Allowing replacement of bulb without removal from control panel.
2. Lamp: LED, 120 V or 24 V as required.
3. Full voltage type.
4. Push-to-test indicating lights.
5. Glass lens.
6. Color code lights as follows:
a. Red: ON or running; valve open.
b. Amber: Standby; auto mode; ready.
c. Green: OFF or stopped; valve closed.
d. Dark grey: Fail or off-line.
e. Yellow: Alarm or error.
f. Orange: Manual mode.

2.3 RELAYS

A. General Requirements:
1. Standards: NEMA ICS 2, UL 508.

B. Control Relays:
1. General purpose (ice cube) type:
a. Plug-in housing.
b. Clear polycarbonate dust cover with clip fastener.
c. Coil voltage: 120 V AC or as required.

d. Contacts:
   1) 10 amp continuous.
   2) Silver cadmium oxide.
   3) Minimum of 3 SPDT contacts.
e. Sockets: DIN rail mounted.
f. Internal neon or LED indicator is lit when coil is energized.
g. Manual operator switch.

2. Industrial type:
   a. Coil voltage: 120 V AC or as required.
   b. Contacts:
      1) 10 amp, NEMA A600 rated.
      2) Double break, silver alloy.
      3) Convertible from normally open to normally closed or vice versa, without removing any wiring.
      4) Expandable from 2 poles to 12 poles.
   c. Provide contacts for all required control plus two spares.

C. Time Delay Relays:
1. General purpose type:
   a. Timing modes: On and Off delay, interval, one shot and repeat cycle.
   b. Plug-in housing.
   c. Polycarbonate dust cover with clip fastener.
   d. Coil voltage: 120 V AC or as required.
   e. Contacts:
      1) 10 amp continuous.
      2) Silver cadmium oxide.
      3) Two normally open and two normally closed DPDT contacts.
   f. Sockets: DIN rail mounted.
   g. External timing adjustment knob.
   h. Timing ranges: 0.05 seconds to 16.65 HRS.
   i. Repeat accuracy: ±1 percent.
2. Solid State industrial type:
   a. Timing modes: On and Off delay and repeat cycle.
   b. Industrial housing.
   c. Coil voltage: 120 V AC or as required.
   d. Contacts:
      1) 5 amp, NEMA B150 rated.
      2) Silver alloy.
      3) Convertible On Delay and Off Delay contacts.
      4) One normally open and one normally closed timed contacts.
      5) One normally open and one normally closed instantaneous contacts.
   e. Furnish with "on" and "timing out" indicators.
   f. External timing adjustment knob.
   g. Timing ranges: 0.05 seconds to 10 HRS.
   h. Repeat accuracy: ±1 percent.
3. Mechanical industrial type:
   a. Timing modes: On and Off delay.
   b. Coil voltage: 120 V AC or as required.

c. Contacts:
   1) 10 amp, NEMA A600 rated.
   2) Double break, silver alloy.
   3) Convertible On Delay and Off Delay contacts.
   4) Convertible normally open and normally closed timed contacts.
   5) Convertible normally open instantaneous contacts.
d. External timing adjustment knob.
e. Timing ranges: 0.2 – 60 sec or 5 – 180 sec.
f. Repeat accuracy: greater than ±10 percent.

2.4 MISCELLANEOUS DEVICES

A. Run Time Meters:
   1. Six-digit wheels including a 1/10 digit.
   2. Non-reset type.
   3. Time range in hours.
   4. Automatic recycle at zero.
   5. Accuracy: 1 percent.
   6. Sealed against dirt and moisture.
   7. Tamperproof.

2.5 TERMINATION EQUIPMENT

A. General Requirements:
   1. Modular type with screw compression clamp.
   2. Screws: Stainless steel.
   3. Current bar: Nickel-plated copper allow.
   4. Thermoplastic insulation rated for -40 to +90 DegC.
   5. Wire insertion area: Funnel-shaped to guide all conductor strands into terminal.
   6. End sections and end stops at each end of terminal strip.
   7. Machine-printed terminal markers on both sides of block.
   8. Spacing: 6 mm.
   9. Wire size: 22-12 AWG.
   10. Rated voltage: 600 V.
   11. Din rail mounting.
B. Standard-type block:
   1. Rated current: 30 A.
   2. Color: Gray body.
C. Bladed-type disconnect block:
   1. Terminal block with knife blade disconnect which connects or isolated the two sides of the block.
   2. Rated current: 10 A.
   3. Color:
      a. Panel control voltage leaves enclosure - normal: Gray body, orange switch.
      b. Foreign voltage entering enclosure: Orange body, orange switch.
D. Grounded-type block:
   1. Electrically grounded to mounting rail.
   2. Terminal ground wires and analog cable shields.
   3. Color: Green and yellow body.
E. Fuse Holders:
   1. Blocks can be ganged for multi-pole operation.

2. Spacing: 9.1 mm.
3. Wire size: 30-12 AWG.
4. Rated voltage: 300 V.
5. Rated current: 12 A.
6. Fuse size: 1/4 x 1-1/4.
7. Blown fuse indication.
8. DIN rail mounting.

2.6 ENCLOSURES

A. Control Panels:
1. NEMA 4X rated:
   a. Body and cover: 14 GA Type 304 or 316 stainless steel.
   b. Seams continuously welded and ground smooth.
   c. No knockouts.
   d. External mounting flanges.
   e. Hinged door and stainless steel screws and clamps.
   f. Door with oil-resistant gasket.
2. NEMA 12 enclosure:
   a. Body and cover: 14 GA steel finished with rust inhibiting primer and manufacturers standard paint inside and out.
   b. No knockouts.
   c. External mounting flanges.
   d. Non-hinged stainless steel cover held closed with captivated cover screws threaded into sealed wells or hinged cover held closed with stainless steel screws and clamps.
   e. Flat door with oil resistant gasket.
3. Control Panel Miscellaneous Accessories:
   a. Back plane mounting panels: Steel with white enamel finish or Type 304 stainless steel.
   b. Interiors shall be white or light gray in color.
   c. Wire management duct:
      1) Bodies: PVC with side holes.
      2) Cover: PVC snap-on.
      3) Size as required.
   d. Rigid handles for covers larger than 9 SF or heavier than 25 LBS.
   e. Split covers when heavier than 25 LBS.
   f. Floor stand kits made of same material as the enclosure.
   g. Weldnuts for mounting optional panels and terminal kits.
4. Standards: NEMA 250, UL 50.

B. Operator Control Stations:
1. NEMA 4X rated:
   a. Type 304 or 316 stainless steel body.
   b. Gasketed Type 304 or 316 stainless steel cover.
   c. Number of device mounting holes as required.

2.7 MAINTENANCE MATERIALS

A. Provide 100 percent replacement lamps for indicating lights.
B. Provide 10 percent replacement caps for indicating lights.

PART 3 EXECUTION

3.1 INSTALLATION

A. Install as indicated and in accordance with manufacturer's recommendations and instructions.
B. Control Panels:
   1. Size as required to mount the equipment.
   2. Permitted uses of NEMA 4X enclosure:
      a. Surface mounted in areas designated as wet and/or corrosive or highly corrosive.
   3. Permitted uses of NEMA 12 enclosure:
      a. Surface mounted in areas designated as dry architecturally or non-architecturally finished areas.
C. Operator Control Stations:
   1. Permitted uses of NEMA 4X enclosure:
      a. Surface mounted in areas designated as wet and/or corrosive or highly corrosive.

3.2 FIELD QUALITY CONTROL

A. See Section 16010 (Electrical: Basic Requirements).

END OF SECTION

SECTION 16500

INTERIOR AND EXTERIOR LIGHTING

PART 1 GENERAL

1.1 SUMMARY

A. Section Includes:
   A. Material and installation requirements for:
      1. Interior building lighting fixtures.
      2. Exterior building and Site lighting fixtures.
      3. Lamps.
      4. Ballasts.
      5. Lighting poles.
      6. Lighting control.

1.2 REFERENCES

A. ANSI C82	Standards for Electric Lamp Ballasts
B. CFR 47 CFR 18	Industrial, Scientific and Medical Equipment
C. IEEE C62.41	Recommended Practice on Surge Voltages in Low-Voltage AC Power Circuits
D. NEMA 250	Enclosures for Electrical Equipment (1000Volts Maximum)
E. NFPA 101	Life Safety Code
F. UL 198C	High-Interrupting-Capacity Fuses, Current Limiting Type
G. UL 924	Emergency Lighting and Power Equipment
H. UL 935	Fluorescent Lamp Ballasts
I. UL 1029	High Intensity Discharge Lamp Ballasts
J. UL 1570	Fluorescent Lighting Fixtures
K. UL 1572	High Intensity Discharge Lighting Fixtures

1.3 SUBMITTALS

A. See Section 16010 (Electrical: Basic Requirements).
B. Product Data:
   1. Identify fixtures by Fixture Schedule number.
   2. Fixture data sheet including:
      a. Photometric performance data including candlepower distribution and coefficient of utilization (CU) table.
      b. Fixture EPA's for pole mounted fixtures.
   3. Pole data shall include:
      a. Pole wind loading.
      b. Anchor bolt template.
C. Installation, Operation, and Maintenance Manual:
   1. Lighting Fixtures.
   2. Ballasts.
   3. Lamps.

1.4 MAINTENANCE

A. Furnish a minimum of 2 or 10 percent of total of each type and wattage of lamps, whichever is greater.

B. Furnish a minimum of 10 percent of total of each type and amperage of fuses for fixtures indicated to be fused.
C. Spare parts are to be stored in a box clearly labeled as to its contents.

PART 2 PRODUCTS

2.1 MANUFACTURERS

A. Subject to compliance with the Contract Documents, the following manufacturers are acceptable:
   1. Lighting fixtures: See Fixture Schedule.
   2. Lamps:
      a. Osram/Sylvania.
      b. General Electric.
      c. Philips.
      d. Or Approved Equal.
   3. Ballasts: Fixture manufacturer's standard.
   4. Poles: Fixture manufacturer's standard.

2.2 GENERAL REQUIREMENTS

A. All lighting fixtures and electrical components:
   1. UL labeled.
   2. Fixtures complete with lamps and ballasts.
   3. Rated for area classification as indicated.
B. Provide all recessed fixtures with gaskets of rubber, fiberglass, or equivalent material to prevent light leaks around flush trim. Provide recessed fixtures with trim gaskets cemented in proper position.
C. Reflector coating having a minimum 89 percent reflectance factor.
D. No live parts normally exposed to contact.
E. When intended for use in wet areas: Mark fixtures "Suitable for wet locations."
F. When intended for use in damp areas: Mark fixtures "Suitable for damp locations" or "Suitable for wet locations."

2.3 LIGHT FIXTURES

A. Fluorescent:
   1. UL 1570.
   2. NEMA LE 4 for recessed locations.
   3. Lenses: As indicated in Fixture Schedule, with the following minimums:
      a. Troffer: 100 percent virgin acrylic, conical shaped, female 0.1875 IN, square based prisms, aligned 45 degrees to the length and width, 0.125 IN nominal thickness.
   4. Finish: Manufacturer's standard polyester, acrylic enamel or epoxy powder coating applied after fabrication. Manufacturer's standard color or special color specified in Fixture Schedule.
   5. Prewired and provided with lamps that are properly mated to the ballast operating characteristics.
B. High Intensity Discharge:
   1. UL 1572.

2. Finish: Manufacturer's standard polyester, acrylic enamel or epoxy powder coating applied after fabrication. Manufacturer's standard color or special color specified in Fixture Schedule.
3. Prewired and provided with lamps that are properly mated to the ballast operating characteristics.
4. Provided with safety chain.

2.4 LAMPS

A. Fluorescent:
1. T8 (265 mA) rapid-start medium bipin lamps.
   a. Correlated color temperature of 3500 degrees Kelvin.
   b. Minimum color rendering index (CRI) of 70.
   c. Minimum initial lumen ratings for each lamp type shall be:
      1) 1300 lumens for 24 IN, 17 watt F17T8 lamp.
      2) 2025 lumens for 36 IN, 25 watt F25T8 lamp.
      3) 2800 lumens for 48 IN, 32 watt F32T8 lamp.
      4) 5700 lumens for 96 IN, 59 watt F96T8 lamp.
      5) 2725 lumens for 22.5 IN, 32 watt F32T8/U/6 lamp (U-shaped 6 inch leg spacing).

B. High Intensity Discharge (HID) Lamps:
1. Metal halide lamps.
   a. Correlated color temperature of 4000 degrees Kelvin.
   b. Minimum color rendering index (CRI) of 65.
2. High pressure sodium lamps.
   a. Correlated color temperature of 2100 degrees Kelvin.
   b. Minimum color rendering index (CRI) of 21.
   c. High pressure sodium lamps are designated on the lighting Fixture Schedule by the prefix HPS.
3. Uncoated (clear) unless identified as coated in the fixture schedule.
4. The specified fixture in the fixture schedule shall dictate the required lamp operating position and base type.
5. Provide lamps that have the correct bulb shape for the fixture specified.

2.5 BALLASTS

A. Fluorescent High Frequency Electronic Ballasts:
1. UL 935.
2. "High Frequency" electronic operating lamps at a frequency of 20 KHz or higher without visible flicker.
3. Power Factor: Greater than 90 percent.
4. Input current Total Harmonic Distortion (THD) of less than 20 percent.
5. Lamp Current Crest Factor: Less than 1.7, in accordance with lamp manufacturer's recommendations and ANSI C82.11.
6. Instant start with lamps wired in parallel.
7. Support a sustained short to ground or open circuit of any output leads without damage to the ballast.
8. Ballast Factor: Greater than 0.85 per ANSI C82.11.
9. Audible noise rating: Class A or better.
10. Operation in ambient temperatures up to (105 DegF) without damage.
11. Light output to remain constant for a line voltage fluctuation of $\pm$5 percent.

12. Meet the requirements of the Federal Communications Commission Rules and Regulations, Part 18 (47 CFR 18), for non-consumer equipment for EMI and RFI.
13. Meet ANSI C82.11 standards regarding harmonic distortion.
14. Meet ANSI C62.41 Cat. A for transient protection.
15. Comply with all applicable state and federal efficiency standards.
16. Underwriters' Laboratories (UL) listed (Class P).
17. Contain no Polychlorinated Biphenyls (PCB's).

B. High Intensity Discharge Ballasts:
1. ANSI C82.4, UL 1029.
2. Metal halide:
   a. Input voltage variation: ±10 percent.
   b. Maximum lamp regulation spread: 20 percent.
   c. Minimum power factor: 90 percent.
   d. Starting current: not greater than operating current.
   e. Maximum input voltage dip: 40 percent.
   f. Crest factor: 1.5 to 1.8.
   g. Types:
      1) Lead-Type Regulators: constant wattage autotransformer (CWA) and pulse start.
      2) Lag-Type Regulators: magnetic regulator and pulse start.
   h. Contain no Polychlorinated Biphenyls (PCB's).
3. High pressure sodium:
   a. Input voltage variation: ±10 percent.
   b. Maximum lamp regulation spread: 30 percent.
   c. Minimum power factor: 90 percent.
   d. Starting current: not greater than operating current.
   e. Maximum input voltage dip: 20 percent.
   f. Crest factor: 1.6 to 1.8.
   g. The Volts-Watts trace shall be within the lamp manufacturer’s trapezoid.
   h. Types:
      1) Lead-Type Regulators: constant wattage autotransformer (CWA).
      2) Lag-Type Regulators: magnetic regulator and regulated lag.
   i. Ballast shall not contain Polychlorinated Biphenyls (PCB's).
4. Ballasts for interior use:
   a. Encased and potted type.
   b. Audible noise rating of B or better.
   c. Built-in automatic resetting thermal protection switch.
5. Ballasts for exterior use:
   a. Starting temperature: -20 DegF.

2.6 POLES

A. As scheduled or noted on the Drawings.

PART 3 EXECUTION

3.1 INSTALLATION

A. Locate fixtures as indicated.
B. Mount lighting fixtures at heights indicated in Section 16010 (Electrical: Basic Requirements) or per fixture schedule or as indicated.

C. Install exterior fixtures so that water can not enter or accumulate in the wiring compartment.
D. Ground fixtures and ballasts.

3.2 POLE INSTALLATION

A. Steel and Aluminum Poles:
   1. Mounted on cast-in-place foundations, as indicated.
      a. Concrete and reinforcing steel, in accordance with Section 03002 (Concrete and Control Density Fill).
   2. Protect pole finish during installation. Repair damage to pole finish with manufacturer approved repair kit.
B. Ground poles as indicated.
C. Conductors:
   1. See Section 16125 (Wire and Cable - 600 Volt and Below) for required underground conductors.
   2. Use interior building wire, as specified in Section 16125 (Wire and Cable - 600 Volt and Below), from pole base to fixture, #12 AWG minimum.
D. Overcurrent and Short Circuit Protection:
   1. Protect each phase with a UL Class CC fuse:
      a. Size: 3 times load current.
      b. Standard: UL 198C.
   2. Fuseholder:
      a. Watertight, in-line and break-a-way style.
      b. Accept up to a 30 Amp, 600 Volt fuse.
      c. Neutral conductor shall utilize a fuseholder with a solid copper rod.
      d. Conductor terminal: Adequate size for the installed conductors.

3.3 LIGHTING CONTROL

A. Fixtures controlled as detailed on Drawings.

3.4 ADJUST AND CLEAN

A. Replace all inoperable lamps with new lamps prior to final acceptance.

END OF SECTION

CONTRACT NO.
70-12-7 #45

PROJECT MANUAL

VOLUME 2

FOR

North Bay Water Reuse Program - Sonoma Valley Effluent Reservoir R5

SONOMA VALLEY COUNTY SANITATION DISTRICT

FEBRUARY 2011

NOTE

The only way to ensure receipt of all Bidding Documents (including Addenda) is to register as a Planholder with Owner.

North Bay Water Reuse Program
SONOMA VALLEY EFFLUENT RESERVOIR R5

Sonoma Valley County Sanitation District

January 2011

Contract No. 70-12-7 #45

SHEET LIST

GENERAL

G01 COVER SHEET, LOCATION AND VICINITY MAPS, SHEET LIST, AND GENERAL NOTES
G02 GENERAL NOTES, ABBREVIATIONS AND SYMBOLS
G03 PROCESS FLOW SCHEMATIC AND DESIGN CRITERIA
G04 STANDARD DETAILS
G05 STANDARD STRUCTURAL DETAILS I
G06 STANDARD STRUCTURAL DETAILS II
G07 STANDARD STRUCTURAL DETAILS III
G08 STANDARD STRUCTURAL DETAILS IV
G09 STANDARD STRUCTURAL DETAILS V
G10 STANDARD STRUCTURAL DETAILS VI

CIVIL

C01 OVERALL SITE PLAN AND RESERVOIR CAPACITY CURVE
C02 EFFLUENT STORAGE RESERVOIR SITE PLAN
C03 EFFLUENT STORAGE RESERVOIR ENLARGED AREA PLAN
C04 EFFLUENT STORAGE RESERVOIR SECTIONS AND DETAILS I
C05 EFFLUENT STORAGE RESERVOIR SECTIONS AND DETAILS II
C06 EFFLUENT STORAGE RESERVOIR SECTIONS AND DETAILS III
C07 EFFLUENT STORAGE RESERVOIR SECTIONS AND DETAILS IV
C08 RESERVOIR INLET PIPE AND CHEMICAL FEED AREA PLANS, SECTIONS AND DETAILS
C09 24" RESERVOIR INLET PIPE & 24" OVERFLOW PIPE PLAN AND PROFILE
C10 WATMAUGH EXPORT PIPE PLAN AND PROFILE

STRUCTURAL/PROCESS

SP01 RESERVOIR EXPORT PUMPING STATION DECK LEVEL PLAN
SP02 RESERVOIR EXPORT PUMPING STATION SECTIONS AND DETAILS I
SP03 RESERVOIR EXPORT PUMPING STATION SECTIONS AND DETAILS II
SP04 MOTOR CONTROL CENTER FOUNDATION PLAN, SECTION AND DETAILS

ELECTRICAL

E01 ELECTRICAL SYMBOLS AND LEGEND
E02 ELECTRICAL SITE PLAN
E03 EXPORT PUMPING STATION AND MCC-R ELECTRICAL PLANS
E04 SINGLE LINE DIAGRAM, CONTROL DIAGRAMS AND SCHEDULES
E05 ELECTRICAL DETAILS
E06 DUCT BANK WIRING AND CONDUIT SCHEDULES

GENERAL NOTES

1. **HORIZONTAL DATUM:**
   CALIFORNIA COORDINATE SYSTEM ZONE 2, NAD 1983

2. **VERTICAL DATUM:**
   BASED ON MEAN SEA LEVEL DATUM OF 1929. A U.S.C. AND G.S. BRONZE DISK STAMPED "L 470 1951" FOUND APPROXIMATELY 1.0 MILE SOUTHEAST ALONG THE SOUTHERN PACIFIC RAILROAD COMPANY TRACKS FROM THE STATION AT SCHELLVILLE, AND 250'± NORTHWEST OF BURNDALE ROAD. BENCHMARK IS SET IN THE TOP OF THE NORTHWEST END OF THE NORTHEAST CONCRETE HEADWALL, 7.4' NORTHEAST OF THE NORTHEAST RAIL. ELEVATION 6.51'.

3. **PROJECT BENCHMARK:**
   A 1 1/2" BRONZE DISK STAMPED "SV-1 EL 23.43" AND SET IN THE CONCRETE BASE OF THE FLAGPOLE AT THE SOUTHEAST CORNER OF THE SONOMA VALLEY TREATMENT PLANT OPERATIONS BUILDING. ELEVATION 23.43'.

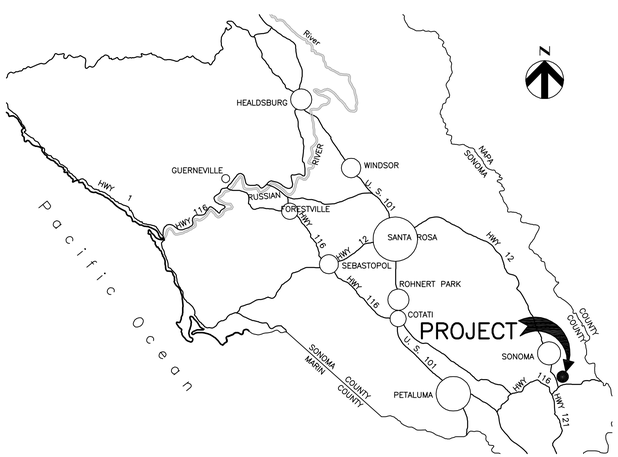

VICINITY MAP
NTS

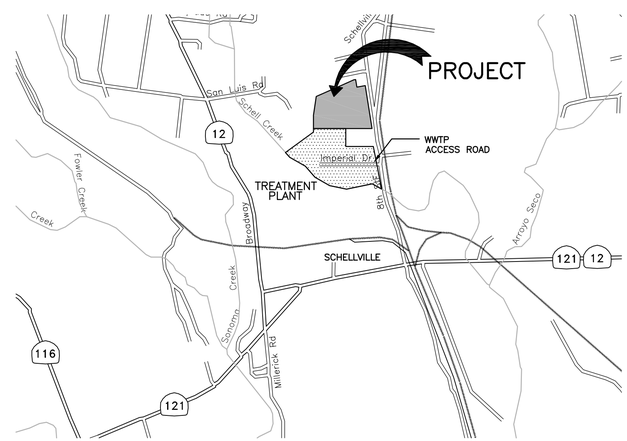

LOCATION MAP
NTS

HDR
HDR Engineering, Inc.

ISSUE	DATE	DESCRIPTION
0	1/20/2011	ISSUED FOR BID

PROJECT MANAGER	CRAIG OLSON, PE
DESIGNED	R. NATOLI
CHECKED	C. OLSON
DRAWN	P. VAN MEURS
PROJECT NUMBER	9240-144993
DISTRICT PROJECT	7487

APPROVED

APPROVED

REGISTERED PROFESSIONAL ENGINEER CRAIG A. OLSON NO. 39819 EXP. 12-31-11 CIVIL STATE OF CALIFORNIA
1/20/11

North Bay Water Reuse Program
Sonoma Valley Effluent Reservoir R5

Sonoma Valley County Sanitation District

GENERAL

COVER SHEET, LOCATION AND VICINITY MAPS, SHEET LIST AND GENERAL NOTES

0 1" 2"

FILENAME	144993_G01.dwg
SCALE	NONE

SHEET G01

SITE PLAN SYMBOLOGY

- EMBANKMENT SLOPE
- 500 — CONTOUR
- VEGETATION (SIZE)
- CO — CLEANOUT
- MH — MANHOLE
- MW — MONITORING WELL
- PZ — PIEZOMETER
- CB — STORM DRAIN CATCH BASIN
- UV — UTILITY VAULT
- PP — POWER POLE
- TP — TELEPHONE POLE
- FH — FIRE HYDRANT
- YH–X — YARD HYDRANT
- 75.5 — EXISTING SPOT ELEVATION
- 75.8 — FINISHED SPOT ELEVATION
- CP–X — HORIZONTAL CONTROL POINT
- BENCHMARK
- TH–"X" — IDENTIFICATION AND APPROXIMATE LOCATION OF SOIL TEST HOLE
- DOWNGUY
- EXTERIOR PAD MOUNTED TRANSFORMER
- POLE – MOUNTED TRANSFORMER
- Y — ELECTRICAL HANDHOLE OR MANHOLE Y – MHX OR HHX, WHERE X INDICATES SEQUENCE NUMBER

NOTES:

1. UTILITIES THAT ARE SUSPENDED ABOVE GRADE ARE DESIGNATED BY THE PREFIX "OH" (OVERHEAD).

- T — TELEPHONE LINE
- E — ELECTRIC LINE
- C — COMMUNICATION
- HANDRAIL AND GUARDRAIL
- PIPELINE
- LARGE PIPELINE
- UTILITY BENEATH STRUCTURE
- RAILROAD
- DRAINAGE FLOW
- NATURAL WATERWAY
- X — X — CHAIN LINK FENCE
- X — X — FIELD FENCE
- PROPERTY LINE
- CENTERLINE
- RB — ROCK BERM
- SF — SILT FENCE
- EASEMENT
- LIMITS OF CONSTRUCTION
- ROW
- WETLANDS BOUNDARY

GENERAL SYMBOLOGY

ARROW INDICATES DIRECTION OF PLAN NORTH — N

PLAN
1/4" = 1'–0"
PLAN TITLE

SECTION LETTER
FLAG INDICATES DIRECTION OF SECTION CUT
X / XXX
SHEET WHERE SECTION IS LOCATED *
SECTION CUT MARKER

SECTION LETTER
SECTION
3/8" = 1'–0"
X / XXX
SHEET WHERE SECTION VIEW IS FIRST CUT *
SECTION TITLE

DETAIL NUMBER
/ XXX
SHEET WHERE DETAIL IS LOCATED
DETAIL MARKER
FOR REFERENCING DETAILS INCLUDED IN DRAWING SET

DETAIL NUMBER
DETAIL
3" = 1'–0"
/ XXX
* SHEET WHERE DETAIL WAS CALLED OUT
DETAIL TITLE

* FOR COMMON DETAILS AND SECTIONS OR DETAILS THAT ARE CUT OR CALLED OUT ON MULTIPLE SHEETS, THE SHEET NUMBER IS REPLACED BY A DASH (–)

MATERIALS IN PLAN/SECTION

- CHECKERED PLATE (PLAN)
- CONCRETE (PLAN AND/OR SECTION)
- CONCRETE MASONRY (PLAN AND/OR SECTION)
- DEMOLITION (PLAN AND/OR SECTION)
- EARTH (SECTION)

IDENTIFICATION SYMBOLOGY

PIPING

FIGURE — 24" EFF — EXAMPLE

LINE SIZE — 24"
SERVICE — FINAL EFFLUENT

SERVICE DESIGNATOR	SERVICE
2W	NO. 2 WATER
3W	NO. 3 WATER
CHEM	CHEMICAL FEED
OF	OVERFLOW
RW	RECYCLED WATER

ABBREVIATIONS

AB	ANCHOR BOLT
ABAN	ABANDON
ABC	AGGREGATE BASE COURSE
AC	ASPHALT CONCRETE, ACRES
AD	ADDENDUM, AREA DRAIN
ADDL	ADDITIONAL
ADH	ADHESIVE
ADJ	ADJUSTABLE, ADJACENT
AFF	ABOVE FINISH FLOOR
AFG	ABOVE FINISH GRADE
AGGR	AGGREGATE
AI	AREA INLET
AIT	ANALYZER INDICATOR TRANSMITTER
ALIG	ALIGNMENT
ALT	ALTERNATE, ALTITUDE
ALUM	ALUMINUM
ANC	ANCHOR
APRX	APPROXIMATE
APVD	APPROVED
ASSY	ASSEMBLY
AUTO	AUTOMATIC
AVE	AVENUE
AVG	AVERAGE
AWG	AMERICAN WIRE GAGE
B TO B	BACK TO BACK
BAL	BALANCE
BC	BOLT CENTER, BOLT CIRCLE
BD	BOARD
BE	BOTH ENDS
BF	BOTH FACES, BOTTOM FACE
BITUM	BITUMINOUS
BKG	BACKING
BL	BASE LINE
BLDG	BUILDING
BM	BENCHMARK
BOP	BOTTOM OF PIPE
BOT	BOTTOM
BP	BASE PLATE
BS	BOTH SIDES
BTW	BETWEEN
BTWLD	BUTT WELD
BU	BUILT–UP
BW	BOTH WAYS
BYP	BYPASS
C TO C	CENTER TO CENTER
CAP	CAPACITY
CDF	CONTROLLED–DENSITY FILL
CE	CONCRETE EDGE
CF	CUBIC FEET (FOOT)
CHFR	CHAMFER
CIP	CAST–IN–PLACE
CJ	CONSTRUCTION JOINT
CLJ	CONTROL JOINT
CLR	CLEAR
CMP	CORRUGATED METAL PIPE
CON	CONCENTRIC
CONC	CONCRETE
CONN	CONNECTION
CONST	CONSTRUCTION
CONT	CONTINUOUS
COOR	COORDINATE
CP	CONTROL POINT
CPLG	COUPLING
CTR	CENTER
CTRL	CONTROL
CVT	CULVERT
CU	CUBIC
CY	CUBIC YARD
D	DEEP, DRAIN
DBL	DOUBLE
DEG	DEGREE
DEMO	DEMOLITION
DEP	DEPRESSED
DET	DETAIL
DI	DROP INLET, DUCTILE IRON
DIA	DIAMETER
DIM	DIMENSION
DISCH	DISCHARGE
DIST	DISTANCE, DISTRIBUTION
DMJ	DOUBLE MECHANICAL JOINT
DN	DOWN
DP	DEPTH
DUP	DUPLICATE
DWG	DRAWING
E	EAST
EA	EACH
ECC	ECCENTRIC
EF	EACH FACE
EFF	EFFLUENT
EG	EXISTING GRADE
EL	ELBOW, ELEVATION
ELEC	ELECTRICAL
EMBD	EMBEDDED
EMER	EMERGENCY
ENCL	ENCLOSURE
ENGR	ENGINEER
ENTR	ENTRANCE
EOP	EDGE OF PAVEMENT
EQ	EQUAL
EQUIP	EQUIPMENT
EQUIV	EQUIVALENT
ES	EACH SIDE
EST	ESTIMATE
EW	EACH WAY
EWEF	EACH WAY, EACH FACE
EWTB	EACH WAY, TOP AND BOTTOM
EXC	EXCAVATION
EXP	EXPANSION, EXPOSED
EXST	EXISTING
EXT	EXTERIOR, EXTERNAL, EXTENSION
F TO F	FACE TO FACE
FAB	FABRICATE
FB	FLAT BAR
FC	FLUSHING CONNECTION
FCA	FLANGED COUPLING ADAPTER
FD	FLOOR DRAIN
FDTN	FOUNDATION
FE	FLANGED END
FES	FLARED END SECTION
FF	FAR FACE, FLAT FACE
FG	FINISHED GRADE
FIN	FINISH
FIT	FLOW INDICATOR TRANSMITTER
FL	FLOW, FLOW LINE
FLEX	FLEXIBLE
FLG	FLANGE
FLR	FLOOR
FN	FENCE
FOC	FACE OF CONCRETE
FPT	FEMALE PIPE THREAD
FS	FAR SIDE
FT	FEET, FOOT
FTG	FOOTING, FITTING
FUT	FUTURE
FW	FIELD WELD
FWD	FORWARD
FWE	FURNISHED WITH EQUIPMENT
FXTR	FIXTURE
GA	GAGE (METAL THICKNESS)
GAL	GALLON
GALV	GALVANIZED
GB	GRADE BREAK
GD	GUARD
GEN	GENERAL
GJ	GROOVED JOINT
GND	GROUND
GP	GUY POLE
GR	GRADE
GRTG	GRATING
GVL	GRAVEL
GW	GUY WIRE
H	HIGH
HD	HEAD
HDPE	HIGH DENSITY POLYETHYLENE
HDR	HEADER
HDW	HARDWARE
HEX	HEXAGONAL
HFCA	HARNESSED FLANGED COUPLING ADAPTER
HM	HOLLOW METAL
HORIZ	HORIZONTAL
HP	HIGH POINT
HPC	HORIZONTAL POINT OF CURVATURE
HPT	HORIZONTAL POINT OF TANGENCY
HSS	HOLLOW STRUCTURAL SHAPE
HT	HEIGHT
HV	HIGH VOLTAGE
HVAC	HEATING, VENTILATING AND AIR CONDITIONING
HWL	HIGH WATER LEVEL
HYD	HYDRAULIC
HZ	HERTZ, CYCLES PER SECOND
ID	INSIDE DIAMETER, INTERIOR DIMENSION
IE	INVERT ELEVATION
IF	INSIDE FACE
IN	INCH
INC	INCLUDE
INF	INFLUENT
INT	INTERSECTION
INTR	INTERMEDIATE, INTERIOR
INV	INVERT
IPS	IRON PIPE SIZE
IPT	INTERNAL PIPE THREAD
IR	INSIDE RADIUS
IRR	IRRIGATION
ISO	ISOMETRIC
JCT	JUNCTION
JT	JOINT
K	KIP
KO	KNOCK OUT
L	ANGLE, LENGTH
LATL	LATERAL
LB	LAG BOLT
LDR	LEADER
LE	LIFTING EYE
LF	LINEAR FOOT
LG	LONG
LIN	LINEAR
LNG	LONGITUDINAL
LOC	LOCATION
LP	LOW POINT
LR	LONG RADIUS
LT	LEFT
LTG	LIGHTING
LTL	LINTEL
LWC	LIGHTWEIGHT CONCRETE
LWL	LOW WATER LEVEL
MAINT	MAINTENANCE
MATL	MATERIAL
MAX	MAXIMUM
MC	MECHANICAL COUPLING
MED	MEDIUM
MFR	MANUFACTURER
MH	MANHOLE
MIN	MINIMUM
MISC	MISCELLANEOUS
MJ	MECHANICAL JOINT
MON	MONUMENT
MSL	MEAN SEA LEVEL
MT	MOUNT
MW	MONITORING WELL
N	NORTH
NA	NOT APPLICABLE
NC	NORMALLY CLOSED
NF	NEAR FACE
NIC	NOT IN CONTRACT
NO	NORMALLY OPEN, NUMBER
NOM	NOMINAL
NPS	NOMINAL PIPE SIZE
NS	NEAR SIDE
NTS	NOT TO SCALE
NWL	NORMAL WATER LEVEL
O TO O	OUT TO OUT
OC	ON CENTER
OD	OUTSIDE DIAMETER
OF	OUTSIDE FACE
OH	OVERHEAD
OPNG	OPENING
OPP	OPPOSITE
OPT	OPTIONAL
OR	OUTSIDE RADIUS
ORIG	ORIGINAL
OVFL	OVERFLOW
PAR	PARALLEL
PC	POINT OF CURVE, PRECAST
PCC	POINT OF COMPOUND CURVATURE
PCF	POUNDS PER CUBIC FOOT
PCT	PERCENT
PE	PLAIN END
PED	PEDESTAL
PEN	PENETRATION
PERF	PERFORATED
PERM	PERMANENT
PERP	PERPENDICULAR
PG	PRESSURE GAGE
PI	POINT OF INTERSECTION
PIT	PRESSURE INDICATOR TRANSMITTER
PL	PLATE, PROPERTY LINE
PLCS	PLACES
PLF	POUNDS PER LINEAR FOOT
PP	POLYPROPYLENE
PRC	POINT OF REVERSE CURVATURE
PREFAB	PREFABRICATED
PRELIM	PRELIMINARY
PREP	PREPARE
PRES	PRESSURE
PRI	PRIMARY
PROT	PROTECTION
PS	PIPE SUPPORT
PSF	POUNDS PER SQUARE FOOT
PSI	POUNDS PER SQUARE INCH
PSIA	POUNDS PER SQUARE INCH ABSOLUTE
PSIG	POUNDS PER SQUARE INCH GAGE
PT	POINT, POINT OF TANGENCY
PVC	POINT OF VERTICAL CURVE
PVMT	PAVEMENT
R&R	REMOVE AND REPLACE
R&S	REMOVE AND SALVAGE
R	RADIUS
RB	ROCK BERM
RED	REDUCER
REF	REFERENCE
REINF	REINFORCING
REM	REMOVE
REQD	REQUIRED
RET	RETAINING, RETURN
REV	REVISION, REVERSE
RFG	ROOFING
RGH	ROUGH
RND	ROUND
RNG	RUNNING
RO	ROUGH OPENING
ROW	RIGHT–OF–WAY
RSP	ROCK SLOPE PROTECTION
RT	RIGHT
RY	READY
SA	SUPPLY AIR
SAN	SANITARY
SC	SOLID CORE
SCH	SCHEDULE
SEC	SECONDARY, SECONDS
SECT	SECTION
SEP	SEPARATE
SF	SQUARE FOOT, SILT FENCE
SHT	SHEET
SIM	SIMILAR
SL	SLOPE
SLTD	SLOTTED
SLV	SLEEVE
SMLS	SEAMLESS
SOG	SLAB ON GRADE
SPA	SPACING
SPEC	SPECIFICATION
SPLY	SUPPLY
SQ	SQUARE
SR	SHORT RADIUS
SST	STAINLESS STEEL
STA	STATION
STD	STANDARD
STIR	STIRRUP
STL	STEEL
STOR	STORAGE
STR	STRUCTURAL, STRAIGHT
SUSP	SUSPENDED
SY	SQUARE YARD
SYM	SYMBOL
SYMM	SYMMETRICAL
T&B	TOP AND BOTTOM
TAN	TANGENT
TBM	TEMPORARY BENCHMARK
TCE	TEMPORARY CONSTRUCTION EASEMENT
TEMP	TEMPORARY, TEMPERATURE
THD	THREAD
THK	THICK
TOB	TOP OF BOLT, TOP OF BERM
TOC	TOP OF CONCRETE
TOF	TOP OF FOOTING
TOG	TOP OF GRATING
TOP	TOP OF PLATE
TOPO	TOPOGRAPHY
TOS	TOE OF SLOPE
TOW	TOP OF WALL
TRANS	TRANSITION
TRD	TRENCH DRAIN
TYP	TYPICAL
UG	UNDERGROUND
UNO	UNLESS NOTED OTHERWISE
UTIL	UTILITY
V	VENT
VAC	VACUUM
VB	VAPOR BARRIER
VC	VERTICAL CURVE
VEL	VELOCITY
VENT	VENTILATION
VERT	VERTICAL
VIF	VERIFY IN FIELD
VOL	VOLUME
VPI	VERTICAL POINT OF INTERSECTION
VPT	VERTICAL POINT OF TANGENCY
W/	WITH
W/O	WITHOUT
W	WEST
WD	WIDTH
WL	WATER LEVEL
WLD	WELDED
WM	WIRE MESH
WS	WATERSTOP, WATER SURFACE
WT	WEIGHT, WATER TIGHT
WWF	WELDED WIRE FABRIC
XP	EXPLOSION–PROOF
XS	EXTRA STRONG
XSECT	CROSS SECTION
XXS	DOUBLE EXTRA STRONG
YH	YARD HYDRANT
YS	YIELD STRENGTH

IDENTIFICATION SYMBOLOGY

EQUIPMENT IDENTIFICATION

FIGURE — RWP–001 — EXAMPLE

SERVICE ABBREVIATION — INDICATES RECYCLED WATER
EQUIPMENT ABBREVIATION — INDICATES PUMP
EQUIPMENT NUMBER — PUMP 001

EQUIPMENT ABBREVIATIONS

RWP	RECYCLED WATER PUMP
SG	SLIDE GATE

NOTES:

1. THESE ABBREVIATIONS APPLY TO THE ENTIRE SET OF CONTRACT DRAWINGS.
2. LISTING OF ABBREVIATIONS DOES NOT IMPLY THAT ALL ABBREVIATIONS ARE USED IN THE CONTRACT DRAWINGS.
3. ABBREVIATIONS SHOWN ON THIS SHEET INCLUDE VARIATIONS OF A WORD. FOR EXAMPLE, "MOD" MAY MEAN MODIFY OR MODIFICATION; "INC" MAY MEAN INCLUDED OR INCLUDING AND "REINF" MAY MEAN EITHER REINFORCE OR REINFORCING.

HDR
HDR Engineering, Inc.

ISSUE	DATE	DESCRIPTION
0	1/20/2011	ISSUED FOR BID

PROJECT MANAGER	CRAIG OLSON, PE
DESIGNED	R. NATOLI
CHECKED	C. OLSON
DRAWN	P. VAN MEURS
PROJECT NUMBER	9240–144993
DISTRICT PROJECT	7487

APPROVED
APPROVED

REGISTERED PROFESSIONAL ENGINEER CRAIG A. OLSON NO. 39819 EXP. 12-31-11 CIVIL STATE OF CALIFORNIA 1/20/11

North Bay Water Reuse Program
Sonoma Valley Effluent Reservoir R5

Sonoma Valley County Sanitation District

GENERAL
GENERAL NOTES, ABBREVIATIONS AND SYMBOLS

0 1" 2"

FILENAME	144993_G02.dwg
SCALE	NONE

SHEET **G02**

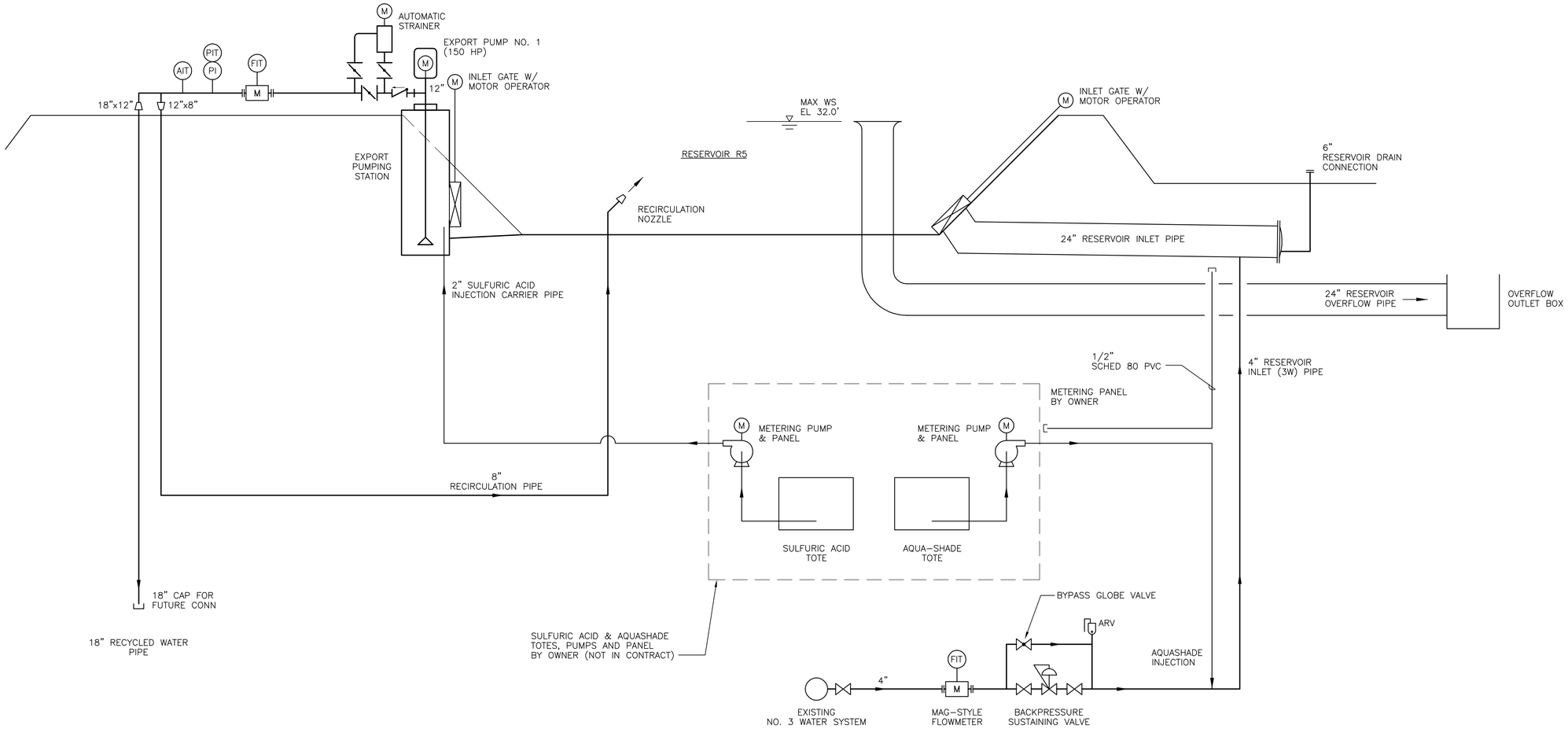

DESIGN CRITERIA

RECYCLED WATER PUMP	RWP-001
FLOW:	2500 GPM
HEAD:	117 FT TDH
HP:	150 HP

HDR

HDR Engineering, Inc.

ISSUE	DATE	DESCRIPTION
0	1/20/2011	ISSUED FOR BID

PROJECT MANAGER	CRAIG OLSON, PE
DESIGNED	R. NATOLI
CHECKED	C. OLSON
DRAWN	P. VAN MEURS
PROJECT NUMBER	9240-144993
DISTRICT PROJECT	7487

APPROVED

APPROVED

REGISTERED PROFESSIONAL ENGINEER CRAIG A. OLSON NO. 39819 EXP. 12-31-11 CIVIL STATE OF CALIFORNIA

1/20/11

North Bay Water Reuse Program
Sonoma Valley Effluent Reservoir R5

Sonoma Valley County Sanitation District

GENERAL

PROCESS FLOW SCHEMATIC AND DESIGN CRITERIA

0 1" 2"

FILENAME	144993_G03.dwg
SCALE	NONE

SHEET **G03**

NOTES:

1. TOE BOARD NOT SHOWN.
2. VERTICAL POST SHALL BE 1 1/2" NOMINAL DIAMETER SCHEDULE 40 PIPE.
3. FASTENERS SHALL BE 1/2" DIAMETER STAINLESS STEEL ADHESIVE ANCHORS WITH 4" MINIMUM EMBEDMENT. PROVIDE STAINLESS STEEL NUTS AND WASHER.

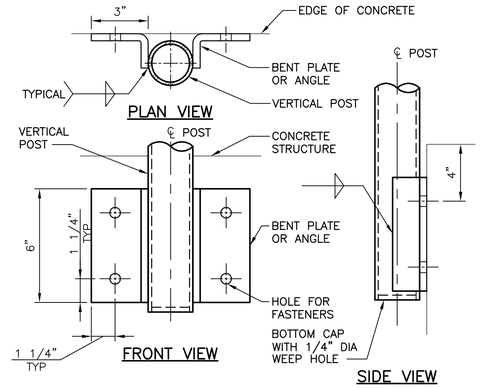

ALUMINUM GUARDRAIL POST

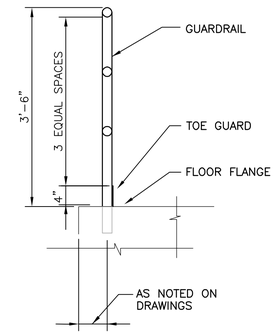

GUARDRAIL

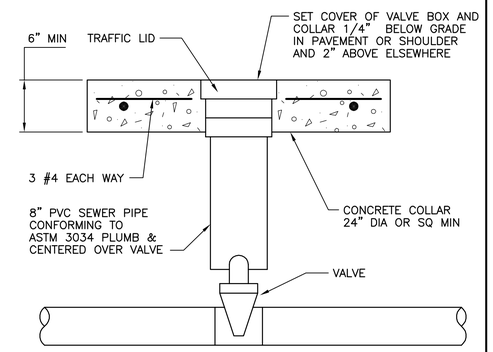

VALVE BOX DETAIL

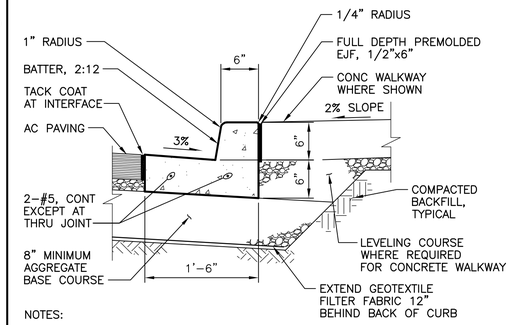

NOTES:

1. PROVIDE TOOLED JOINTS NOT TO EXCEED 15' ON CENTER AND NOT LESS THAN 10' ON CENTER.
2. PLACE FULL DEPTH THRU JOINTS W/ 1/2"x6" PREMOLDED JOINT FILLER AT POINTS OF TANGENCY AND AT 25' INTERVALS, MINIMUM.

CURB AND GUTTER

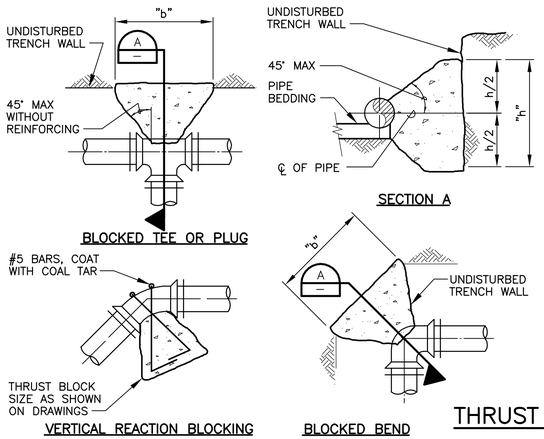

REACTION BLOCKING SCHEDULE			
PIPE SIZE	LOCATION	"b" FT	"h" FT
3" & 4"	45° BEND	1	1
3" & 4"	90° BEND OR TEE	2	1
6"	45° BEND	2	1
6"	90° BEND OR TEE	2	2
8"	45° BEND	2	1.5
8"	90° BEND OR TEE	2.5	2.5
10"	45° BEND	2.5	2.5
10"	90° BEND OR TEE	3.5	3
12"	45° BEND	3.5	3
12"	90° BEND OR TEE	4	4

NOTE:
THRUST BLOCKS SHALL NOT BE USED ON PIPES GREATER THAN 12" DIAMETER. RESTRAINED JOINTS TO BE USED AS DEFINED IN SPECIFICATION SECTION 15060.

THRUST BLOCKING DETAILS

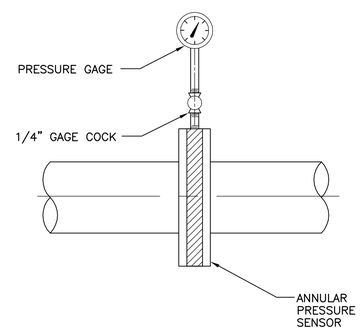

PRESSURE GAGE (PG-4)

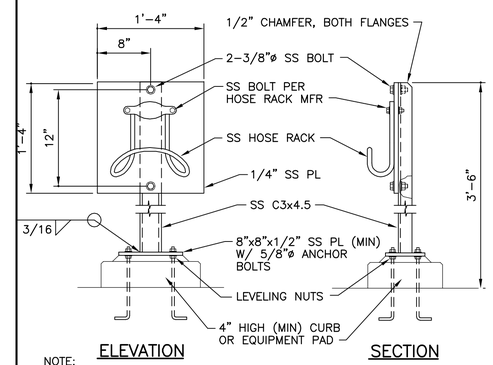

NOTE:
REMOVE ALL BURRS AND SHARP EDGES.

FLOOR MOUNTED HOSE RACK (HR-2)

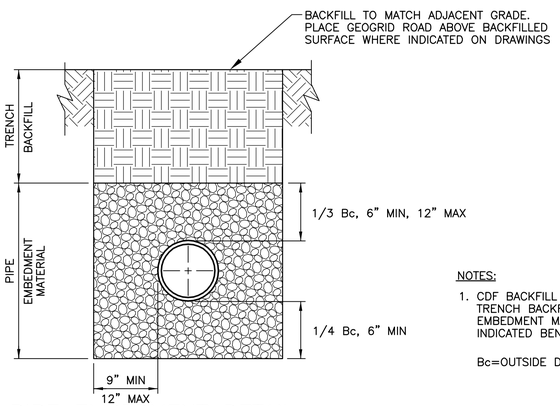

NOTES:

1. CDF BACKFILL REQUIRED FOR TRENCH BACKFILL AND PIPE EMBEDMENT MATERIAL AS INDICATED BENEATH RESERVOIR BERMS.

Bc=OUTSIDE DIAMETER OF PIPE

PIPE EMBEDMENT DETAIL

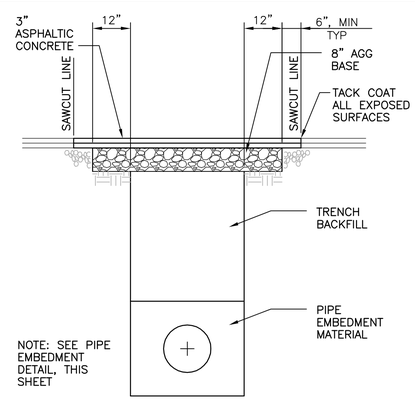

PAVEMENT REPLACEMENT

NTS

B

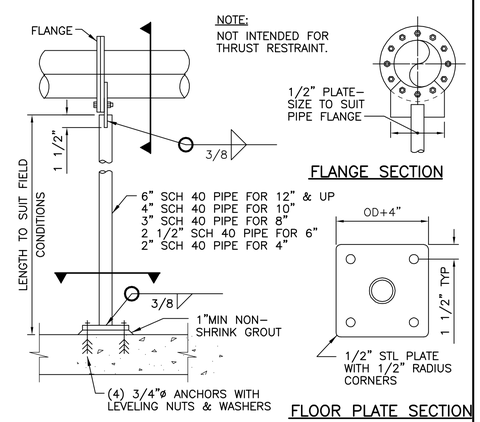

FLANGED PIPE SUPPORT

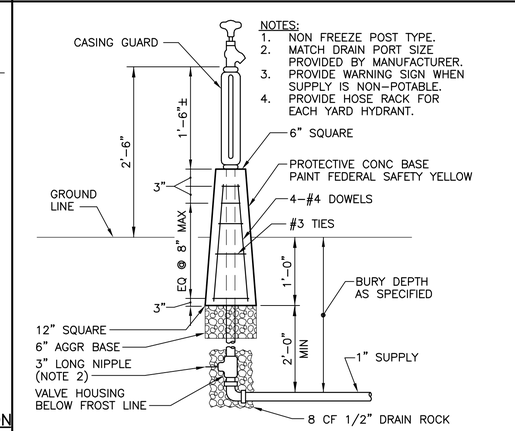

YARD HYDRANT YH-1

HDR

HDR Engineering, Inc.

ISSUE	DATE	DESCRIPTION
0	1/20/2011	ISSUED FOR BID

PROJECT MANAGER	CRAIG OLSON, PE
DESIGNED	R. NATOLI
CHECKED	C. OLSON
DRAWN	P. VAN MEURS
PROJECT NUMBER	9240-144993
DISTRICT PROJECT	7487

APPROVED

APPROVED

REGISTERED PROFESSIONAL ENGINEER CRAIG A. OLSON NO. 39819 EXP. 12-31-11 CIVIL STATE OF CALIFORNIA 1/20/11

North Bay Water Reuse Program
Sonoma Valley Effluent Reservoir R5

Sonoma Valley County Sanitation District

GENERAL STANDARD DETAILS

0 1" 2"

FILENAME	144993_G04.dwg
SCALE	NONE

SHEET **G04**

GENERAL

G1 SCOPE
THE NOTES ON THIS SHEET AND THE STANDARD STRUCTURAL DETAILS ARE GENERAL AND APPLY TO THE ENTIRE PROJECT WHETHER SPECIFICALLY CALLED OUT OR NOT, EXCEPT WHERE THERE ARE SPECIFIC INDICATIONS TO THE CONTRARY ON STRUCTURAL SHEETS. IF THERE ARE QUESTIONS, THEY SHALL BE SUBMITTED TO THE STRUCTURAL ENGINEER AND ANSWERED IN WRITING PRIOR TO CONSTRUCTION.

G2 APPLICABLE SPECIFICATIONS AND CODES
- A. INTERNATIONAL BUILDING CODE, CBC 2010 WITH APPLICABLE EDITIONS OF THE CODE REFERENCED STANDARDS.
- B. ACI 318
- C. ASCE7–05

G3 DESIGN CRITERIA
1. APPLIES TO ALL STRUCTURES (UNO)
   - A. DEAD LOAD:
     1. ACTUAL TRIBUTARY STRUCTURE WEIGHT
     2. SUPERIMPOSED DEAD LOAD: ACTUAL WT. OF ANY MECHANICAL EQUIPMENT.
   - B. LIVE LOAD:
     1. ELEVATED FLOORS: 100 PSF
     2. WALKWAYS, STAIRS, GRATING: 100 PSF
     3. SLAB ON GRADE: 250 PSF
     4. ROOF: 20 PSF (NOT REDUCIBLE)
   - C. WIND:
     1. BASIC WIND SPEED: 85 MPH
     2. EXPOSURE: C
     3. IMPORTANCE FACTOR: 1.15
     4. ALL STRUCTURES ARE ENCLOSED.
   - D. SEISMIC:
     1. ABOVE GRADE, NON WATER BEARING AND BELOW GRADE, WATER BEARING STRUCTURES:
     - a. OCCUPANCY CATEGORY: II
     - b. IMPORTANCE FACTOR: 1.0
     - c. SPECTRAL RESPONSE ACCELERATION, S_S= 1.5
     - d. SPECTRAL RESPONSE ACCELERATION, S_1= 0.6
     - e. SITE CLASS: D
     - f. SEISMIC DESIGN CATEGORY: D
     - g. SPECTRAL RESPONSE COEFFICIENT, SD_S= 1.0
     - h. SPECTRAL RESPONSE COEFFICIENT, SD_1= 0.6

G4 THE FOLLOWING GEOTECHNICAL REPORT WAS DEVELOPED FOR THIS PROJECT AND IS THE BASIS OF THIS STRUCTURAL DESIGN:
GEOTECHNICAL FIRM NAME: – HDR
ADDRESS: 2365 IRON POINT ROAD, FOLSOM, CA 95630
REPORT NUMBER: – FILE NO. 4336.110–A
REPORT DATE: – JANUARY,2011
ALLOWABLE [NET] SOIL BEARING = 2500 PSF BASE ON FOUNDATION BEARING
PASSIVE EARTH PRESSURE = 300 PCF/FT
FRICTION FACTOR = 0.30
ACTIVE PRESSURE = 90 PCF/FT UNDRAINED

G5 SAFETY
SAFETY AND STRUCTURE STABILITY DURING CONSTRUCTION ARE THE SOLE RESPONSIBILITY OF THE CONTRACTOR. STRUCTURES HAVE BEEN DESIGNED TO RESIST THE DESIGN LIVE LOADS ONLY AS A COMPLETED STRUCTURE.

G6 OPENINGS
OPENINGS FOR PIPES, DUCTS, CONDUITS, ETC. ARE NOT ALL SHOWN ON THE STRUCTURAL DRAWINGS. COORDINATE AND PROVIDE OPENINGS AS REQUIRED TO ACCOMMODATE ALL WORK SHOWN OR SPECIFIED IN THE CONTRACT DOCUMENTS AND OTHERWISE REQUIRED FOR THE FURNISHING OF A FUNCTIONALLY COMPLETE PROJECT. REINFORCE AROUND OPENINGS PER STANDARD STRUCTURAL DETAILS UNLESS OTHERWISE SHOWN.

G7 SPECIAL INSPECTIONS
SPECIAL INSPECTIONS ARE REQUIRED IN ACCORDANCE WITH CHAPTER 1 AND CHAPTER 17 OF THE CBC. PAYMENT FOR THESE INSPECTIONS IS NOT THE RESPONSIBILITY OF THE CONTRACTOR. THE CONTRACTOR SHALL PROVIDE FOR FULL ACCESS TO THE WORK BY THE SPECIAL INSPECTOR AND SHALL PROVIDE FOR THESE INSPECTIONS IN HIS CONSTRUCTION SCHEDULE IN ACCORDANCE WITH THE SPECIFICATIONS.

G8 STANDARD DETAILS
THE STANDARD DETAILS DEPICT TYPICAL DETAILING TO BE USED ON THIS PROJECT. IF CONDITIONS ARE NOT EXPLICITLY SHOWN ON THE DRAWINGS THEY SHALL BE MADE SIMILAR TO THE STANDARD DETAILS. OBTAIN APPROVAL OF ENGINEER IN WRITING FOR SIMILAR CONDITIONS PRIOR TO CONSTRUCTION.

G9 THE CONTRACTOR SHALL FIELD VERIFY ALL DIMENSIONS AND ELEVATIONS OF EXISTING CONSTRUCTION AS REQUIRED TO COORDINATE NEW CONSTRUCTION. SUBMIT REQUIRED CHANGES FOR APPROVAL.

G10 CONTRACTOR TO SUBMIT FOR REVIEW ALL EQUIPMENT SIZES, OPERATING WEIGHTS, VIBRATION FORCES, SUPPORT LOCATIONS, ALONG WITH ANY FLOOR OPENINGS, NOTCHES, AND RECESSES REQUIRED BY SUCH EQUIPMENT. CONCRETE SUPPORT PADS AND/OR FRAMING REQUIRED TO SUPPORT SAID EQUIPMENT SHALL NOT BE FABRICATED AND PLACED UNTIL THE CONCRETE SUPPORT PADS AND/OR FRAMING IS APPROVED TO SUPPORT THE EQUIPMENT.

CONCRETE

C1 DESIGN STRENGTHS:
f'c = 4000 PSI
fy = 60,000 PSI

C2 CONCRETE COVER
UNLESS OTHERWISE NOTED, PROVIDE CONCRETE COVER FOR REINFORCING AS FOLLOWS. SEE DRAWINGS FOR EXCEPTIONS. (2 / G09)

C3 SEE SPECIFICATIONS FOR REINFORCING PLACEMENT REQUIREMENTS.

C4 REFER TO OTHER DISCIPLINE DRAWINGS PRIOR TO CONSTRUCTION FOR EMBEDDED ITEMS AND PENETRATIONS NOT SHOWN ON STRUCTURAL DRAWINGS. AS REQUIRED TO ACCOMMODATE ALL WORK SHOWN OR SPECIFIED IN THE CONTRACT DOCUMENTS AND OTHERWISE REQUIRED FOR THE FURNISHING OF A FUNCTIONALLY COMPLETE PROJECT. REINFORCE AROUND OPENINGS PER STANDARD STRUCTURAL DETAILS UNLESS OTHERWISE SHOWN.

C5 PROVIDE 3/4" CHAMFERS AT ALL EXPOSED EDGES AND 1/2" CHAMFERS AT JOINTS AS SHOWN. NOT ALL CHAMFERS MAY BE SHOWN ON DRAWINGS.

C6 FIELD ADJUST REINFORCING AT OPENINGS AND EMBEDDED ITEMS AS INDICATED.

C7 ANCHOR BOLTS NOT SPECIFIED BY ENGINEER SHALL BE DESIGNED AND CERTIFIED BY A REGISTERED PROFESSIONAL ENGINEER, RETAINED BY THE CONTRACTOR, IN ACCORDANCE WITH APPLICABLE PROJECT AND CODE REQUIREMENTS. SUBMIT AS A SHOP DRAWING FOR REVIEW AND APPROVAL BY THE ENGINEER. COORDINATE LOCATION, SIZE, EMBEDMENT, AND EDGE DISTANCE PRIOR TO CASTING CONCRETE.

C8 CONTINUOUS WATERSTOP SHALL BE INSTALLED IN JOINTS SUBJECT TO STATIC WATER PRESSURE.

C9 ABSOLUTELY NO WELDING OF REINFORCING BARS OR TORCHING TO BEND REINFORCING BARS SHALL BE ALLOWED WITHOUT SPECIFIC AUTHORIZATION FROM THE STRUCTURAL ENGINEER IN WRITING.

C10 CONTRACTOR SHALL SUBMIT A CONCRETE PLACEMENT PLAN PER SPECIFICATION 03311 IDENTIFYING JOINT TYPES, JOINT LOCATIONS AND CONCRETE PLACEMENT SEQUENCE.

C11 ALL CAST IN PLACE AND POST–INSTALLED ANCHORS SHALL COMPLY WITH APPENDIX D OF ACI 318 AND CHAPTER 19 OF THE CBC. ALL EXPANSION AND ADHESIVE ANCHORS SHALL HAVE THE ICC REPORT SHOWING EQUIVALENT LOAD CAPACITY. SUBMIT AND INSTALL PER THE ICC EVALUATION REPORT.

C12 UNLESS OTHERWISE NOTED, ALL WALL REINFORCING BARS SHALL BE CONTINUOUS AROUND CORNERS AND THROUGH COLUMNS OR PILASTERS. REINFORCEMENT SHALL BE EXTENDED INTO CONNECTING WALLS, AND LAPPED ON THE OPPOSITE FACE OF THE CONNECTING WALLS, AS INDICATED ELSEWHERE ON THIS SHEET OR ON THE DRAWINGS. VERTICAL WALL BARS SHALL BE LAPPED WITH DOWELS FROM BASE SLABS AND EXTENDED INTO THE TOP FACE OF ROOF OR FLOOR SLABS AND LAPPED WITH TOP SLAB REINFORCEMENT. UNLESS INDICATED OTHERWISE, CONTRACTOR MAY SPLICE CONTINUOUS SLAB OR LONGITUDINAL BEAM BARS AT LOCATIONS OF IT'S CHOOSING, EXCEPT THAT TOP BAR SPLICES SHALL BE LOCATED AT MIDSPAN AND BOTTOM BAR SPLICES SHALL BE LOCATED AT SUPPORTS. ALL REINFORCEMENT BENDS AND LAPS, UNLESS OTHERWISE NOTED, SHALL SATISFY STANDARD DETAIL (7 / G09).

C13 UNLESS OTHERWISE NOTED, WALL VERTICAL REINFORCING LAYER SHALL BE CLOSEST TO WALL SURFACE, AND WALL HORIZONTAL REINFORCING LAYERS SHALL BE PLACED ATTACHED TO & BETWEEN VERTICAL LAYERS.

C14 MINIMUM REINFORCING AT CONTRACTOR DESIGNED FOUNDATIONS AND PADS: #5@12 EW, T&B. MINIMUM PAD THICKNESS 12".

STEEL

S1 DESIGN STRENGTHS:

WIDE FLANGE AND TEES:	Fy=50 KSI
PIPES:	Fy=35 KSI
STAINLESS STEEL:	Fy=33 KSI
HSS SECTIONS:	Fy=46 KSI
ALL OTHER PLATES AND SHAPES:	Fy=36 KSI

S2 DIMENSIONS:
TO CENTERLINES OF COLUMNS AND BEAMS, TOP SURFACES OF BEAMS AND TUBES AND BACKS OF CHANNELS AND ANGLES UNO.

S3 ELEVATIONS:
TOP OF STEEL REFERS TO TOP SURFACE OF MEMBER OR FLANGE UNO.

S4 WHEN FILLET WELD SIZE IS NOT INDICATED, PROVIDE MAXIMUM WELD SIZE BASED ON MATERIAL THICKNESS IN ACCORDANCE WITH AISC SPECIFICATIONS.

S5 ALL BOLTED STRUCTURAL CONNECTIONS ARE BEARING TYPE CONNECTIONS UNLESS OTHERWISE SPECIFIED TO BE SLIP–CRITICAL. PROVIDE LOAD INDICATING WASHERS AT SLIP–CRITICAL CONNECTIONS.

S6 CONFORM TO AISC 360, STEEL CONSTRUCTION MANUAL AND AISC 341, SEISMIC DESIGN MANUAL.

ALUMINUM

A1 STRUCTURAL ALUMINUM YIELD STRENGTHS
STRUCTURAL ALUMINUM: Fy=35 KSI
STRUCTURAL ALUMINUM IS ALLOY 6061–T6 UNO

A2 DIMENSIONS:
TO CENTERLINES OF COLUMNS AND BEAMS, TOP SURFACES OF BEAMS AND TUBES AND BACKS OF CHANNELS AND ANGLES UNO.

A3 ELEVATIONS:
TOP OF ALUMINUM REFERS TO TOP SURFACE OR FLANGE OF MEMBER UNLESS NOTED OTHERWISE.

A4 WHEN FILLET WELD SIZE IS NOT INDICATED, PROVIDE MAXIMUM WELD SIZE FOR THE MATERIAL THICKNESS IN ACCORDANCE WITH THE LATEST EDITION OF THE "ALUMINUM DESIGN MANUAL" BY THE ALUMINUM ASSOCIATION.

A5 ALUMINUM IN CONTACT WITH DISSIMILAR MATERIALS OR CONCRETE: CONTACT SURFACES SHALL BE PROVIDED WITH GALVANIC SEPERATION PER SPECIFICATIONS.

SPECIAL NOTES:

CONTRACTOR TO FURNISH, DESIGN, DETAIL, AND INSTALL STRUCTURAL COMPONENTS LISTED BELOW. INSTALLATION AND DESIGN SHALL BE IN CONFORMANCE WITH THE 2010 CALIFORNIA BUILDING CODE INCLUDING OSHA REGULATIONS, DRAWINGS, AND SPECIFICATIONS. CALCULATIONS FOR ALL MEMBERS AND CONNECTIONS (INCLUDING ANCHOR BOLTS ATTACHING STRUCTURAL COMPONENTS TO THEIR FOUNDATIONS) MUST BE PREPARED, STAMPED AND SIGNED BY A REGISTERED CIVIL OR STRUCTURAL ENGINEER LICENSED IN THE STATE OF CALIFORNIA AND MUST BE SUBMITTED WITH SHOP DRAWINGS. SHOP DRAWINGS MUST BE STAMPED AND SIGNED BY THE REGISTERED CIVIL OR STRUCTURAL ENGINEER THAT PREPARES THE CALCULATIONS.

1. PUMP ANCHORAGE
2. MOTOR CONTROL CENTER ANCHORAGE
3. MOTOR CONTROL CENTER METAL CANOPY AND ANCHORAGE
4. METAL CANOPY REINFORCED CONCRETE FOUNDATION
5. POLE LIGHT BASE PLATE AND ANCHORAGE

HDR Engineering, Inc.

ISSUE	DATE	DESCRIPTION
0	1/20/2011	ISSUED FOR BID

PROJECT MANAGER	CRAIG OLSON, PE
DESIGNED	R. NATOLI
CHECKED	C. OLSON
DRAWN	P. VAN MEURS
PROJECT NUMBER	9240–144993
DISTRICT PROJECT	7487

APPROVED
APPROVED

REGISTERED PROFESSIONAL ENGINEER CRAIG A. OLSON NO. 39819 EXP. 12-31-11 CIVIL STATE OF CALIFORNIA
1/20/11

North Bay Water Reuse Program
Sonoma Valley Effluent Reservoir R5

Sonoma Valley County Sanitation District

GENERAL

STANDARD STRUCTURAL DETAILS I

0 1" 2"

FILENAME	144993_G05.dwg
SCALE	NONE

SHEET **G05**

SCHEDULE OF SPECIAL INSPECTION SERVICES

INSPECTION ITEM REQUIRED	FREQUENCY		CODE REFERENCE	REMARKS
	CONTINUOUS	PERIODIC		
SOIL & EARTHWORK				
OBSERVE PROOF–ROLLING OF SUBGRADE PRIOR TO BEGINNING FILL PLACEMENT		●	IBC 1704.7	
OBSERVE PLACEMENT AND COMPACTION OF FILL AND BACKFILL MATERIAL	●			
TESTING AND EVALUATION OF IN–PLACE DENSITY OF COMPACTED FILL AS WORK PROGRESSES.		●		
OBSERVE, TEST AS NEEDED, AND APPROVE FOOTING BEARING PRIOR TO PLACING OF REINFORCING STEEL AND CONCRETE.		●		
CONCRETE & REINFORCING STEEL				
OBSERVE PLACEMENT OF REINFORCING STEEL PRIOR TO THE CLOSING OF THE FORMS AND ARRIVAL OF CONCRETE ONSITE.		●		
OBSERVE WELDING OF STEEL REINFORCEMENT, IF ANY	●		AWS D1.4; ACI 318–3.5.2; & IBC 1903.5.2	
VERIFY CORRECT MATERIAL USED, INCLUDING THE USE OF A706 IN WELDED SPLICES		●		
OBSERVE & VERIFY PLACEMENT OF EMBEDDED BOLTS PRIOR TO CONCRETE PLACEMENT.	●		IBC 1704.4	
VERIFY USE OF CORRECT CONCRETE MIX DESIGN AND REVIEW DELIVERY TICKETS		●		
SAMPLE FRESH CONCRETE AND MEASURE SLUMP, AIR CONTENT, AND TEMPERATURE DURING CONCRETE DELIVERY.	●		IBC 1704.4	ADDITIONAL CYLINDERS SHALL BE MADE AS NEEDED FOR EARLY FORM REMOVAL. NOTE: TWO CYLINDERS ARE REQUIRED FOR AN ACCEPTABLE TEST. A SINGLE CYLINDER BREAK IS UNACCEPTABLE FOR STRENGTH EVALUATION PURPOSES.
TAKE CONCRETE SPECIMENS FOR STRENGTH TESTS TO BE PERFORMED IN LAB. A MINIMUM OF FIVE (5) CYLINDERS SHALL BE MADE. TEST TWO AT SEVEN DAYS AND TWO AT 28–DAYS. THE 5TH CYLINDER SHALL BE TESTED AT 28 DAYS IF ONE OR BOTH OF THE 28–DAY CYLINDER RESULTS ARE BELOW REQUIRED STRENGTH.	●			
PERFORM CONCRETE STRENGTH TESTING IN LAB		●		
MAINTAIN A SPREADSHEET SHOWING DATE, SEQUENTIAL ORDER OF STRENGTH TEST RESULTS AND INDICATE RUNNING AVERAGE	●		ACI 318 PAR. 5.6.3.3	
OBSERVE FOR PROPER CONCRETE PLACEMENT	●		ACI 318 PAR. 5.9 & 5.10	
OBSERVE FOR PROPER CURING TEMPERATURE AND TECHNIQUES		●	ACI 318 PAR. 5.11, 5.12 & 5.13	
VERIFY THAT THE NECESSARY DESIGN STRENGTH HAS BEEN REACHED PRIOR TO THE REMOVAL OF FORMS.		●		
MEASURE FLOOR FLATNESS AND LEVELNESS AS NEEDED WHEN QUESTIONABLE SURFACES ARE OBSERVED.		●		
POST INSTALLED ANCHORS	●			PER ICC REPORT
STRUCTURAL STEEL				
VERIFY FABRICATOR CERTIFICATION		●	IBC 1704.2	
VERIFY CORRECT STRUCTURAL STEEL MATERIAL DELIVERED TO JOB SITE		●	IBC 1708.4	VERIFY IDENTIFICATION MARKINGS
MANUFACTURERS' CERTIFIED MILL TEST REPORTS		●	IBC 1708.4	
INSPECTION OF WELDING: COMPLETE AND PARTIAL PENETRATION GROOVE WELDS, MULTIPASS FILLET WELDS, SIGNLE–PASS FILLET WELDS > 5/16"	●		IBC 1704.3.1	AWS D1.1
INSPECTION OF WELDING: COMPLETE AND PARTIAL PENETRATION GROOVE WELDS, MULTIPASS FILLET WELDS, SIGNLE–PASS FILLET WELDS ≤ 5/16"		●	IBC 1704.3.1	AWS D1.1

SCHEDULE OF SPECIAL INSPECTION SERVICES (CONT)

INSPECTION ITEM REQUIRED	FREQUENCY		CODE REFERENCE	REMARKS
	CONTINUOUS	PERIODIC		
VERIFY CORRECT MATERIAL USED HIGH–STRENGTH BOLTS, NUTS, AND WASHERS		●	AISC LRFD A3.3	
OBSERVE & CHECK TIGHTNESS OF ALL BOLTS IN BEARING CONNECTIONS		●	IBC 1704.3.3; AISC LRFD M2.5	
OBSERVE & CHECK TORQUE OF ALL BOLTS IN SLIP–CRITICAL CONNECTIONS		●	IBC 1704.3.3; AISC LRFD M2.5	
GENERAL STRUCTURAL OBSERVATIONS				
CONDUCT WEEKLY VISUAL OBSERVATION OF THE STRUCTURAL SYSTEMS FOR GENERAL CONFORMANCE TO THE CONSTRUCTION DOCUMENTS. PREPARE WEEKLY REPORT OF OBSERVATIONS DESCRIBING WORK PROGRESS AND NON–CONFORMING ITEMS.		●		

TESTING AND INSPECTION FOR QUALITY ASSURANCE

THE OWNER SHALL EMPLOY QUALIFIED SPECIAL INSPECTORS TO PERFORM INSPECTIONS IN ACCORDANCE WITH THE BUILDING CODE. INSPECTORS SHALL PERFORM ALL DUTIES AND RESPONSIBILITIES AS REQUIRED BY THE BUILDING CODE.

THE FOLLOWING SCHEDULE CONTAINS A LIST OF SPECIAL INSPECTION ACTIVITIES RELATED TO THE QUALITY ASSURANCE PLAN REQUIRED BY THE BUILDING CODE (IBC CHAPTER 17) FOR THE FABRICATION, ERECTION AND CONSTRUCTION OF THE STRUCTURAL SYSTEMS AS GIVEN IN THE SPECIFICATIONS AND DRAWINGS OF THE PROJECT. ALL INSPECTORS SHALL BE QUALIFIED BY TRAINING AND EXPERIENCE FOR THE REQUIRED INSPECTIONS AND TEST PROCEDURES. REFER TO IBC CHAPTER 17 "STRUCTURAL TESTS AND SPECIAL INSPECTIONS", FOR SPECIFIC TEST PROCEED.

TESTING AND INSPECTION REPORTS SHALL BE PREPARED FOR EACH INSPECTION ITEM ON A DAILY BASIS WHENEVER WORK IS PERFORMED ON THAT ITEM. REPORTS SHALL BE DISTRIBUTED TO OWNER, CONTRACTOR, BUILDING OFFICIAL (IF REQUESTED), AND ENGINEER FOR THEIR REVIEW, COMMENT, AND ACTION, AS NEEDED.

HDR Engineering, Inc.

ISSUE	DATE	DESCRIPTION
0	1/20/2011	ISSUED FOR BID

PROJECT MANAGER	CRAIG OLSON, PE
DESIGNED	R. NATOLI
CHECKED	C. OLSON
DRAWN	P. VAN MEURS
PROJECT NUMBER	9240–144993
DISTRICT PROJECT	7487

APPROVED

APPROVED

REGISTERED PROFESSIONAL ENGINEER CRAIG A. OLSON NO. 39819 EXP. 12-31-11 CIVIL STATE OF CALIFORNIA 1/20/11

North Bay Water Reuse Program
Sonoma Valley Effluent Reservoir R5

Sonoma Valley County Sanitation District

GENERAL

STANDARD STRUCTURAL DETAILS II

0 1" 2"

FILENAME	144993_G06.dwg
SCALE	NONE

SHEET **G06**

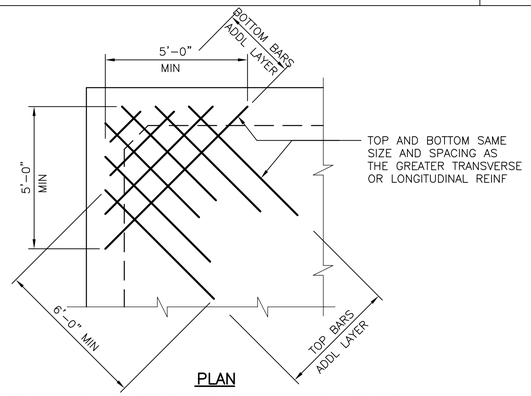

TYPICAL EXTERIOR BUILDING SLAB CORNER DETAIL

1 / –

NTS

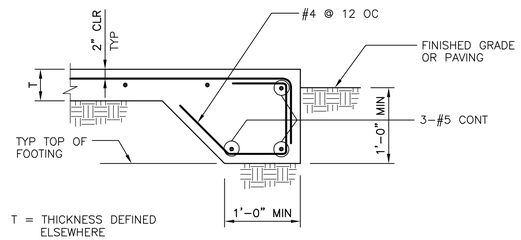

TYPICAL BUILDING SLAB EDGE

2 / –

NTS

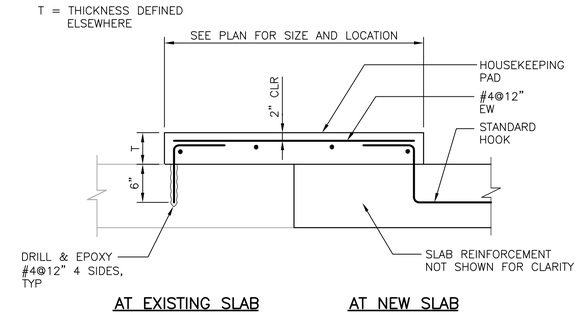

TYPICAL HOUSEKEEPING PAD DETAIL

3 / –

NTS

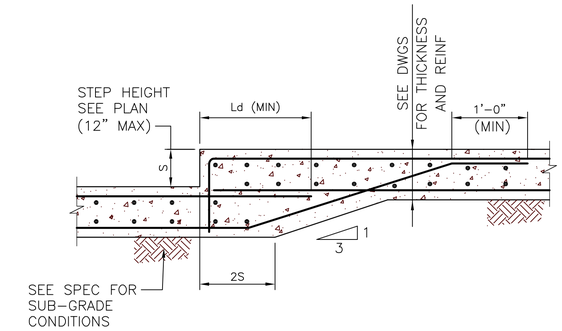

TYPICAL SLAB ON GRADE DEPRESSION (TWO LAYERS OF REINFORCING)

4 / –

NTS

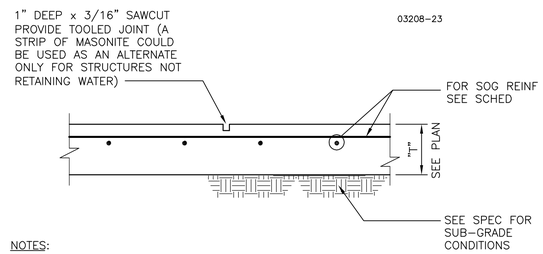

NOTES:

1. SAWCUT TO SUBDIVIDE S.O.G. TO AREAS OF 250 SQUARE FEET OR LESS. AREAS TO BE SQUARE OR APPROXIMATELY SQUARE.
2. SAWCUT AS SOON AS CONCRETE IS FIRM ENOUGH TO WALK ON BUT NO LATER THAN 24 HOURS AFTER POURING.

TYPICAL BUILDING SLAB-ON-GRADE CONTROL JOINT

6 / –

NTS

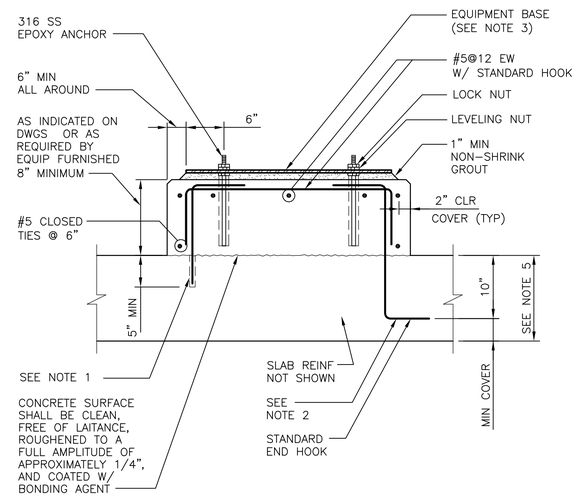

NOTES:

1. FOR NEW EQUIPMENT PADS ON EXISTING SLABS, DRILL INTO EXISTING SLAB TO AT 12" CENTERS AROUND PERIMETER OF EQUIPMENT PADS AND SET #5 HOOKED DOWELS IN EPOXY GROUT.
2. FOR EQUIPMENT PADS ON NEW SLABS, PROVIDE #5 DOWELS AT 12" CENTERS AROUND PERIMETER OF EQUIPMENT BASE.
3. EQUIPMENT DIMENSIONS SHALL BE AS INDICATED ON THE DRAWINGS OR AS DETERMINED BY THE EQUIPMENT MANUFACTURER AND APPROVED BY THE ENGINEER.
4. EQUIPMENT BASES SHALL BE INSTALLED LEVEL. TOLERANCE IS 1/16".
5. WHERE CONCRETE SLAB THICKNESS WILL NOT PROVIDE MINIMUM COVER AS SPECIFIED ON DWGS, PROVIDE EXTRA THICKNESS OF CONCRETE.
6. SIZE PADS PER PLAN WHEN SHOWN.
7. ANCHOR BOLTS AS DESIGNED BY THE EQUIPMENT MANUFACTURER.

EQUIPMENT PAD DETAIL

9 / –

NTS

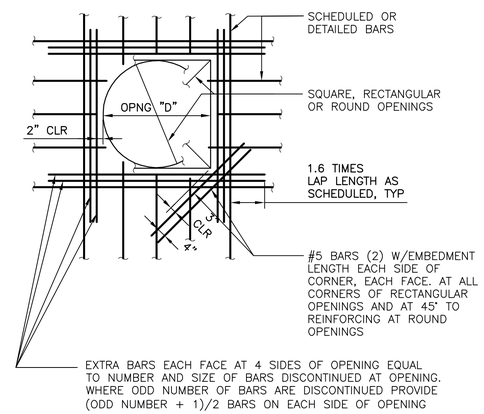

NOTES:

1. THIS DETAIL IS APPLICABLE ONLY TO WALLS OR SLABS WITH THICKNESS 36" OR LESS. FOR CONDITIONS AT THICKER CONCRETE, SEE PLANS AND DETAILS.
2. UNLESS SHOWN OTHERWISE ON DRAWINGS, PROVIDE EXTRA BARS AROUND OPENINGS IN WALLS, FLOORS, AND ROOFS AS SHOWN.
3. EVERY BAR DISCONTINUED AT AN OPENING SHALL BE REPLACED IN KIND BY ONE EXTRA BAR PLACED AT ONE SIDE OF THE OPENING AS SHOWN ABOVE.
4. FOR OPENINGS 8" OR LESS IN SLABS AND WALLS, NO EXTRA BARS ARE REQUIRED UNLESS OTHERWISE NOTED. SCHEDULED REBARS SHALL BE RESPACED (NOT CUT) TO ALLOW FOR UNIMPAIRED OPENINGS.

REINFORCING AT RECTANGULAR/CIRCULAR OPENINGS

10 / –

NTS

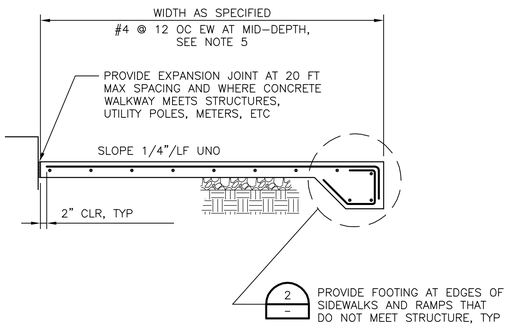

NOTES:

1. PROVIDE BROOM FINISH UNO PER THE REQUIREMENTS OF SPEC SECTION 03002.
2. PROVIDE TOOLED JOINTS AT 5 FOOT CENTERS IN PERPENDICULAR DIRECTIONS.
3. PROVIDE 6" CLASS 2AB UNDER CONCRETE SIDEWALKS AND LANDINGS, UNLESS OTHERWISE NOTED.
4. PROVIDE 12" CLASS 2AB UNDER CONCRETE PAVEMENT AND RAMPS.
5. #5 @ 8" OC EACH WAY AT MID-DEPTH AT CONCRETE PAVEMENT AND RAMPS.
6. 8" THICKNESS AT CONCRETE PAVEMENT AND RAMPS.
7. 4" THICKNESS AT SIDEWALKS.
8. LEAN CONCRETE WITH MINIMUM 28 DAY COMPRESSIVE STRENGTH F'c=3,000 PSI MAY BE USED AT CONCRETE SIDEWALKS AND LANDINGS ONLY. SEE SPECIFICATION SECTION 03002 FOR ADDITIONAL INFORMATION.

CONCRETE SIDEWALK AND RAMP DETAIL

5 / –

NTS

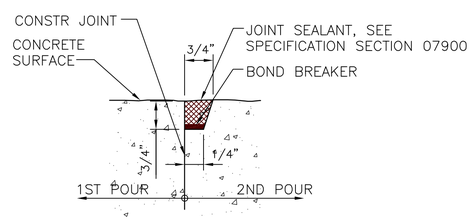

NOTES:

1. DO NOT APPLY BOND BREAKER TO SEALANT GROOVE. BOND BREAKER SHALL BE APPLIED NEATLY TO THE BOTTOM OF GROOVE ONLY.
2. BOND BREAKER TAPE SHALL NOT BE USED EXCEPT FOR SLIP DOWEL JOINTS.
3. ALL JOINTS OF HYDRAULIC STRUCTURES RETAINING WATER SHALL HAVE A SEALANT GROOVE.

TYPICAL SEALANT GROOVE

7 / –

NTS

HDR

HDR Engineering, Inc.

ISSUE	DATE	DESCRIPTION
0	1/20/2011	ISSUED FOR BID

PROJECT MANAGER	CRAIG OLSON, PE
DESIGNED	R. NATOLI
CHECKED	C. OLSON
DRAWN	P. VAN MEURS
PROJECT NUMBER	9240-144993
DISTRICT PROJECT	7487

APPROVED

APPROVED

REGISTERED PROFESSIONAL ENGINEER CRAIG A. OLSON NO. 39819 EXP. 12-31-11 CIVIL STATE OF CALIFORNIA

1/20/11

North Bay Water Reuse Program

Sonoma Valley Effluent Reservoir R5

Sonoma Valley County Sanitation District

GENERAL

STANDARD STRUCTURAL DETAILS III

0 1" 2"

FILENAME	144993_G07.dwg
SCALE	NONE

SHEET **G07**

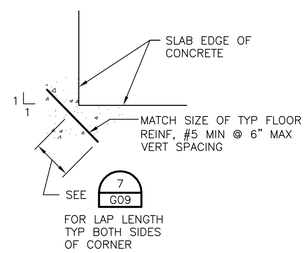

ADDITIONAL REINFORCEMENT AT RE–ENTRANT SLAB CORNER (10 –)

NTS

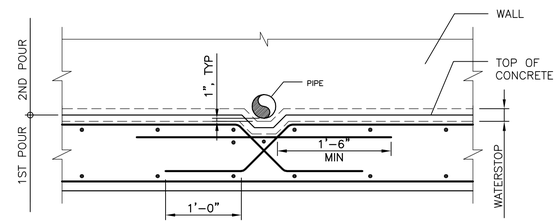

NOTES:

1. WALL REINFORCEMENT NOT SHOWN FOR CLARITY.
2. FOR ALL REINFORCEMENT SEE PLANS.

TYPICAL WALL HORIZ CONST JOINT JOINT AT PIPE INTERFERENCE (2 –)

NTS

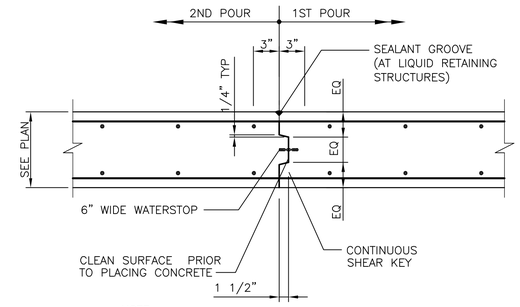

NOTE:

CONTRACTOR TO SUBMIT PROPOSED CONSTRUCTION JOINT LAYOUT (IF DIFFERENT FROM SHOWN ON FLOOR PLAN), FOR REVIEW AND APPROVAL OF THE ENGINEER OF RECORD PRIOR TO PLACING CONCRETE.

TYPICAL WALL VERT CONST JOINT (3 –)

NTS

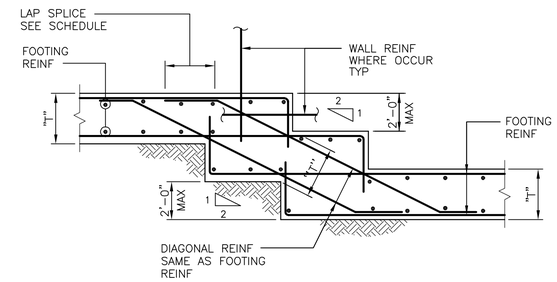

NOTES:

1. FOR FOOTING REINFORCEMENT AND FOOTING SIZE, SEE FOUNDATION PLAN, SECTIONS AND SCHEDULE.
2. "T" DENOTES FOOTING THICKNESS.

TYPICAL STEPPED FOOTING DETAIL (4 –)

NTS

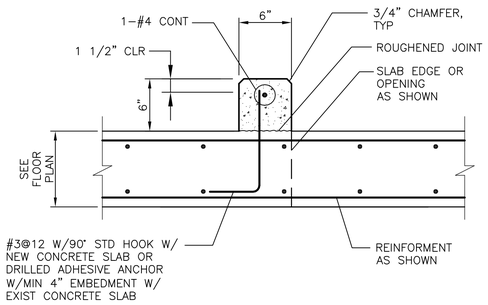

CONCRETE CURB (5 –)

NTS

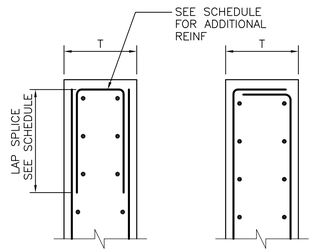

T	ADDITIONAL REINFORCEMENT
T ≤ 1'–6"	#4 U TO MATCH SPACING OF VERTICALS
T > 1'–6"	#5 U TO MATCH SPACING OF VERTICALS

NOTES:

1. FOR TYPICAL REINFORCMENT, SEE PLAN SHEETS.
2. TERMINATE TYPICAL REIFORCEMENT WITH END HOOK (OPTION–2) OR ADDITIONAL U BARS (OPTION–1).
3. THIS DETAIL TO BE USED ONLY WHEN A SPECIAL DETAIL IS NOT PROVIDED ON PLAN SHEETS.

TYPICAL TOP OR END OF WALL REINFORCEMENT W/ "T" ≥ 1'–0" (6 –)

NTS

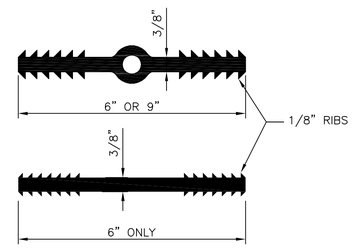

NOTES:

1. – USE 9" AT EXPANSION JOINTS ONLY.
   – USE 6" BULB AT CONSTRUCTION JOINTS.
   – USE 6" NON–BULB AT CONSTRUCTION JOINTS. (WITH REINFORCING CONTINUOUS THRU JOINT)
2. WATERSTOP TO BE PVC UNLESS NOTED OTHERWISE.

WATERSTOP (7 –)

NTS

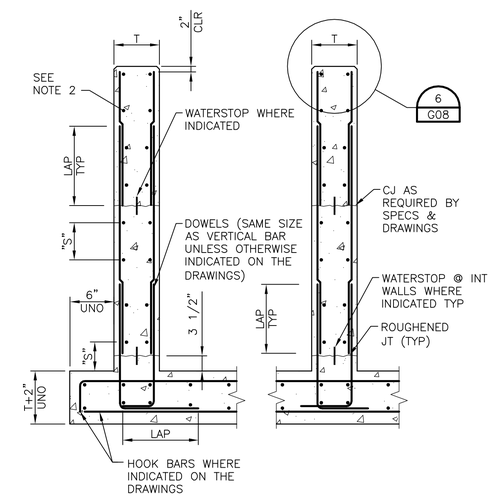

NOTES:

1. "S" = BAR SPACING INDICATED ON THE DRAWINGS
2. FOR HORIZONTAL REINF BAR LOCATION RELATIVE TO VERTICAL REINF BAR LOCATION (INSIDE OR OUTSIDE) SEE DRAWINGS (INSIDE SHOWN).
3. ROUGHENED JOINT SURFACE TO 1/4" AMPLITUDE.

HORIZONTAL WALL JOINTS WITH WATERSTOP (10 –)

NTS

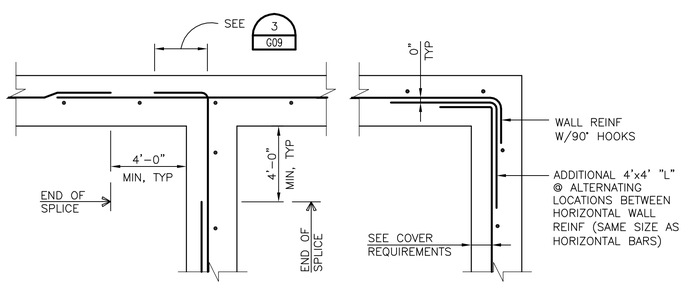

SINGLE–LAYER INTERSECTION SINGLE–LAYER CORNER

HORIZONTAL REINFORCING AT WALL CORNER (8 –)

NTS

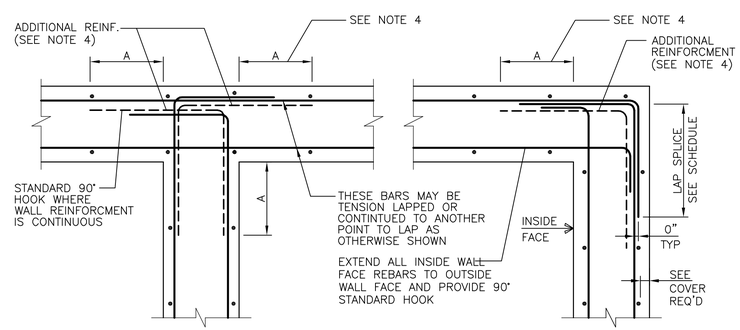

DOUBLE–LAYER INTERSECTION DOUBLE–LAYER CORNER

HORIZONTAL REINFORCING AT WALL CORNER (9 –)

NTS

NOTES:

1. SEE INDIVIDUAL STRUCTURE SHEETS FOR EXTRA HORIZONTAL REBARS AT CORNERS AND WALL INTERSECTIONS.
2. SEE SCHEDULE FOR BAR DEVELOPMENT AND LAP LENGTHS.
3. LONG STRAIGHT BARS WITH LAP SPLICES BENT BARS AT ENDS MAY BE SUBSTITUTED FOR LONG BARS WITH END HOOKS.
4. ADDITIONAL CORNER BARS REQUIRED ONLY AS SPECIFIED ON DESIGN DRAWINGS, AND TO BE STAGGERED. FULL WALL HEIGHT, WITH HORIZONTAL WALL REINFORCING. A=1/5 THE CLEAR SPAN DISTANCE MEASURED HORIZONTALLY BETWEEN WALLS, BUT IN NO CASE LESS THAN THE REQUIRED LENGTH OF LAPPED SPLICES FOR TOP BARS (UNLESS AT A PENETRATION).

HDR Engineering, Inc.

ISSUE	DATE	DESCRIPTION
0	1/20/2011	ISSUED FOR BID

PROJECT MANAGER	CRAIG OLSON, PE
DESIGNED	R. NATOLI
CHECKED	C. OLSON
DRAWN	P. VAN MEURS
PROJECT NUMBER	9240–144993
DISTRICT PROJECT	7487

APPROVED

APPROVED

REGISTERED PROFESSIONAL ENGINEER CRAIG A. OLSON NO. 39819 EXP. 12-31-11 CIVIL STATE OF CALIFORNIA 1/20/11

North Bay Water Reuse Program
Sonoma Valley Effluent Reservoir R5

Sonoma Valley County Sanitation District

GENERAL

STANDARD STRUCTURAL DETAILS IV

0 1" 2"

FILENAME	144993_G08.dwg
SCALE	NONE

SHEET **G08**

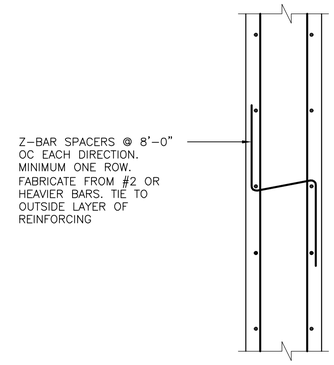

SPACER FOR WALL REINFORCEMENT (1)

NTS

LOCATION	* MINIMUM COVER
UNFORMED SURFACES ADJACENT TO EARTH	3"
FORMED OR TOP SURFACES EXPOSED TO WEATHER OR SATURATED AIR, SUBMERGED OR IN CONTACT WITH EARTH:	2"
OTHER LOCATIONS:	
BARS IN BEAMS OR GIRDERS, INCLUDING STIRRUPS AND COLUMN SPIRALS OR TIES	1 1/2"
SLABS, WALLS AND JOINTS	
#9 AND LARGER	BAR DIA + 1/4"
#8 AND SMALLER	1 1/2"

* COVER FOR REINFORCING STEEL SHALL NOT BE LESS THAN THE MINIMUM GIVEN ABOVE (NO MINUS TOLERANCE) , AND SHALL NOT EXCEED THE MINIMUM BY MORE THAN 1/4 INCH WHERE THE CONCRETE THICKNESS IS 24" OR LESS, OR MORE THAN 1/2 INCH WHERE THE CONCRETE THICKNESS IS MORE THAN 24 INCHES.

REINFORCEMENT CONCRETE COVER (2)

NTS

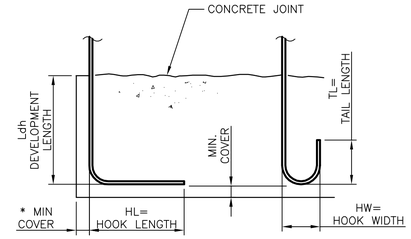

90° STD HOOK 180° STD HOOK

BAR SIZE GRADE 60	f'c=4000 psi				f'c=5000 psi
	Ldh *	HL	HW	TL	Ldh *
#3	6"	6"	3"	3"	6"
#4	7"	8"	4"	4 1/2"	6"
#5	9"	10"	5"	5"	8"
#6	10"	1'–0"	6"	6"	9"
#7	1'–0"	1'–2"	7"	7"	11"
#8	1'–2"	1'–4"	8"	8"	1'–0"
#9	1'–3"	1'–7"	11 3/4"	10 1/2"	1'–2"
#10	1'–5"	1'–10"	1'–1 1/4"	11 1/2"	1'–3"
#11	1'–7"	2'–0"	1'–2 3/4"	1'–1"	1'–5"

* COMPLYING WITH MINIMUM COVER REQUIREMENTS OF ACI 318, 12.5.3.2. OTHERWISE Ldh MUST BE RE–CALCULATED.

REINFORCING HOOK SCHEDULE (3)

NTS

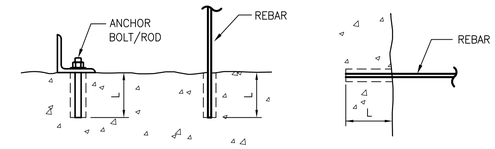

VERTICAL APPLICATION HORIZONTAL APPLICATION

ADHESIVE ANCHOR SCHEDULE			
REINFORCING BARS		ANCHOR BOLTS/RODS	
BAR SIZE	EMBED LENGTH (L)	DIA (IN)	EMBED LENGTH (L)
#3	4"	3/8"	5"
#4	5"	1/2"	6"
#5	6"	5/8"	7"
#6	7"	3/4"	8"
#7	8"	7/8"	9"
#8	9"	1"	10"
#9	10"		
#10	12"		

NOTES:
1. EPOXY TYPE IS SUBJECT TO APPROVAL OF THE ENGINEER OF RECORD.
2. EMBEDMENT LENGTHS SHOWN ARE MINIMUM. PROVIDE MANUFACTURER'S RECOMMENDATIONS FOR INSTALLATION.

ADHESIVE ANCHOR SCHEDULE (4)

NTS

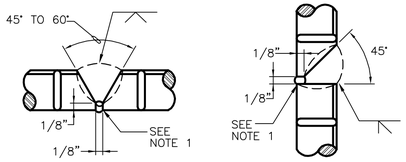

HORIZONTAL POSITION – A VERTICAL POSITION – B

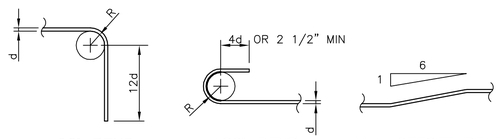

90° BEND 180° BEND MAX OFFSET BEND

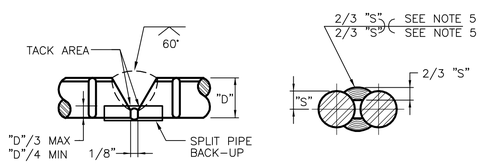

HORIZONTAL AND VERTICAL POSITION – C HORIZONTAL AND VERTICAL POSITION – D

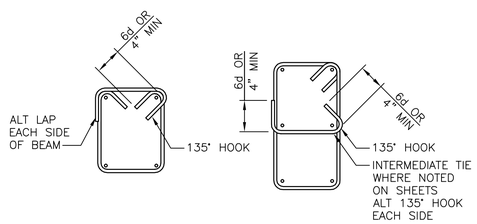

TYP. STIRRUP TYP. COLUMN TIE OR CLOSED STIRRUP

NOTES:

1. CHIP, GRIND, OR GOUGE TO SOUND METAL BEFORE WELDING OTHER SIDE.
2. USE DETAIL A & B FOR #9 & LARGER BARS. USE DETAIL C FOR #8 & SMALLER BARS. USE DETAIL D FOR #6 & SMALLER BARS.
3. E 90 ELECTRODE FOR GRADE 60.
4. SEE AWS D1.4 FOR WELDING PROCESS, PREHEAT REQUIREMENTS, AND OTHER DETAILS. SUBMIT WELDING PROCEDURE PER AWS.
5. 1 1/2" FOR #3 AND #4 BARS; 2" FOR #5 BARS; AND 2 1/2" FOR #6 BARS.

WELDED SPLICE OF REINFORCING BARS (5)

NTS

BAR SIZE	R
#3 TIES & STIRRUPS	2d
#3–#8	3d
#9–#11	4d
#14–#18	5d

TYPICAL STIRRUPS & TIES (6)

NTS

BAR SIZE	f'c = 5.0 ksi		fy = 60.0 ksi	
	LAP LENGTH (IN)		EMBEDMENT LENGTH (IN)	
	TOP	OTHER	TOP	OTHER
#3	21	16	16	12
#4	28	22	22	16
#5	35	27	27	21
#6	43	33	33	25
#7	62	48	48	37
#8	71	55	55	42
#9	80	62	62	47
#10	91	70	70	53
#11	101	77	77	59

BAR SIZE	f'c = 4.0 ksi		fy = 60.0 ksi	
	LAP LENGTH (IN)		EMBEDMENT LENGTH (IN)	
	TOP	OTHER	TOP	OTHER
#3	24	18	18	15
#4	33	24	24	19
#5	40	31	31	24
#6	48	38	37	29
#7	70	55	54	42
#8	81	62	62	48
#9	91	70	70	54
#10	103	79	79	61
#11	113	87	87	67

NOTES:

1. LAP LENGTHS SHOWN ARE FOR CLASS "B" TENSION SPLICES.
2. LAP LENGTHS AND EMBEDMENTS SHOWN ARE FOR BARS SPACED LATERALLY @ > FIVE TIMES THE BAR DIAMETER AND FOR MINIMUM COVER IN ACCORDANCE WITH ACI 318–05.
3. IF SPACING IS < 5 TIMES BAR DIAMETER, INCREASE LAP LENGTH AND EMBEDMENT SHOWN BY 25%.
4. TOP REINFORCING IS HORIZONTAL STEEL SO PLACED THAT MORE THAN 12" OF FRESH CONCRETE IS CAST IN THE MEMBER BELOW THE REINFORCING.

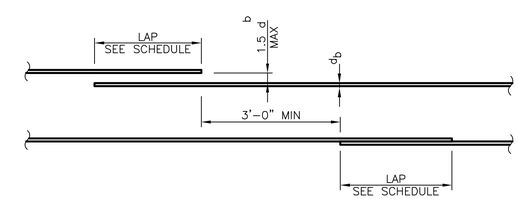

REINFORCING LAP SCHEDULE (7)

NTS

HDR Engineering, Inc.

ISSUE	DATE	DESCRIPTION
0	1/20/2011	ISSUED FOR BID

PROJECT MANAGER	CRAIG OLSON, PE
DESIGNED	R. NATOLI
CHECKED	C. OLSON
DRAWN	P. VAN MEURS
PROJECT NUMBER	9240–144993
DISTRICT PROJECT	7487

APPROVED

APPROVED

REGISTERED PROFESSIONAL ENGINEER CRAIG A. OLSON NO. 39819 EXP. 12-31-11 CIVIL STATE OF CALIFORNIA 1/20/11

North Bay Water Reuse Program
Sonoma Valley Effluent Reservoir R5

Sonoma Valley County Sanitation District

GENERAL

STANDARD STRUCTURAL DETAILS V

0 1" 2"

FILENAME 144993_G09.dwg

SCALE NONE

SHEET **G09**

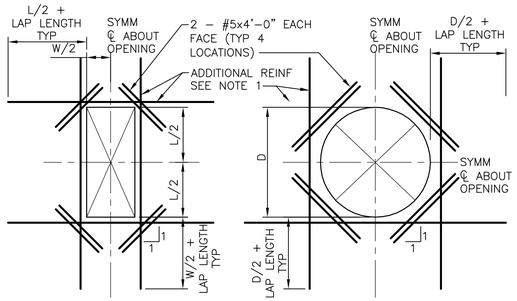

RECTANGULAR OPENING DETAIL **CIRCULAR OPENING DETAIL**

NOTES:

1. PROVIDE ADDITIONAL REINFORCING THE SAME SIZE AS DISCONTINUOUS REINFORCEMENT AT OPENING. QUANTITY OF REINFORCING IN EACH DIRECTION SHALL BE EQUAL TO OR ONE GREATER THAN THE NUMBER OF DISCONTINUOUS BARS. PLACE 1/2 OF ADDITIONAL REINFORCING BARS EACH SIDE OF OPENING, PLACE ADDITIONAL REINFORCEMENT AT 3" OC (TYPICAL BOTH DIRECTIONS AND ALL LAYERS OF REINFORCEMENT). START FIRST BAR 2" CLEAR TO OPENING.
2. EXTEND ADDITIONAL REINFORCING BEYOND EDGE OF OPENING AS SHOWN ABOVE. ADDITIONAL BARS MAY TERMINATE AT THE END OF THE WALL WITH A STANDARD HOOK WHERE THE LENGTH OF THE WALL WILL NOT PERMIT BARS TO EXTEND AS SHOWN ABOVE.
3. TYPICAL WALL OR SLAB REINFORCING NOT SHOWN. TERMINATE TYPICAL REINFORCING 2" CLEAR TO OPENING.
4. OPENINGS 12" OR LESS IN SLABS AND OPENINGS 18" OR LESS IN WALLS, NO EXTRA REBARS ARE REQUIRED UNLESS SHOWN OTHERWISE. TYPICAL REINFORCING SHALL BE RESPACED (NOT CUT) TO ALLOW FOR OPENINGS TO BE MADE.
5. UNLESS SHOWN OTHERWISE ON DRAWINGS, PROVIDE EXTRA REINFORCING AROUND OPENINGS AS SHOWN AND INDICATED ABOVE.
6. PROVIDE ADDITIONAL DOWELS PER NOTE 1 ABOVE FOR ALL OPENINGS NEAR THE FLOOR SLAB, BASE SLAB, OR CORNERS.

EXTRA REINFORCING AROUND OPENINGS

1 / –

NTS

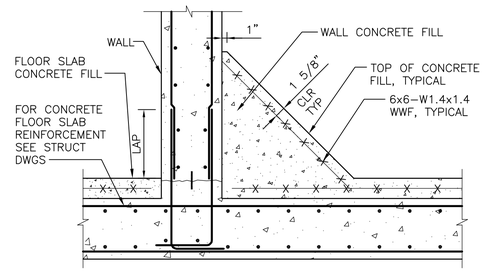

NOTE:

REINFORCE CONCRETE FILL AS SHOWN WHERE CONCRETE FILL THICKNESS EXCEEDS 4".

CONCRETE FILL REINFORCING

2 / –

NTS

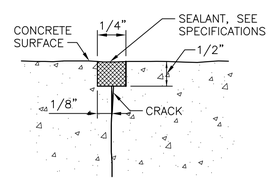

NOTES:

1. ENLARGE CRACK AT CONCRETE SURFACE AS SHOWN AND APPLY JOINT SEALANT.
2. ALL CRACKS IN WATER RETAINING STRUCTURES MUST BE REPAIRED PRIOR TO FILLING.

CONCRETE CRACK REPAIR DETAIL

3 / –

NTS

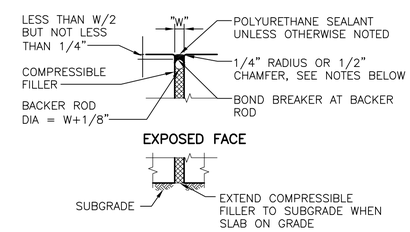

NOTES:

1. FOR WALLS, FORM ALL JOINT EDGES AT 3/4" CHAMFER.
2. FOR UNDER SIDE OF EXPOSED SLABS, FORM JOINT EDGES AT 1/2" CHAMFER.
3. FOR SLABS, PROVIDE 1/4" RADIUS TOOLED EDGES AT TOP SURFACE
4. USE SOIL–SIDE DETAIL AT UNDERSIDE OF SLABS ON GRADE ONLY. USE EXPOSED FACE DETAIL AT ALL OTHER LOCATIONS.
5. "W" = 1" WIDE UNLESS OTHERWISE INDICATED ON DRAWINGS.

EXPANSION JOINT NO BARS ACROSS

4 / –

NTS

HDR

HDR Engineering, Inc.

ISSUE	DATE	DESCRIPTION
0	1/20/2011	ISSUED FOR BID

PROJECT MANAGER	CRAIG OLSON, PE
DESIGNED	R. NATOLI
CHECKED	C. OLSON
DRAWN	P. VAN MEURS
PROJECT NUMBER	9240–144993
DISTRICT PROJECT	7487

APPROVED

APPROVED

REGISTERED PROFESSIONAL ENGINEER CRAIG A. OLSON NO. 39819 EXP. 12-31-11 CIVIL STATE OF CALIFORNIA

1/20/11

North Bay Water Reuse Program
Sonoma Valley Effluent Reservoir R5

Sonoma Valley County Sanitation District

GENERAL

STANDARD STRUCTURAL DETAILS VI

0 1" 2"

FILENAME	144993_G10.dwg
SCALE	NONE

SHEET **G10**

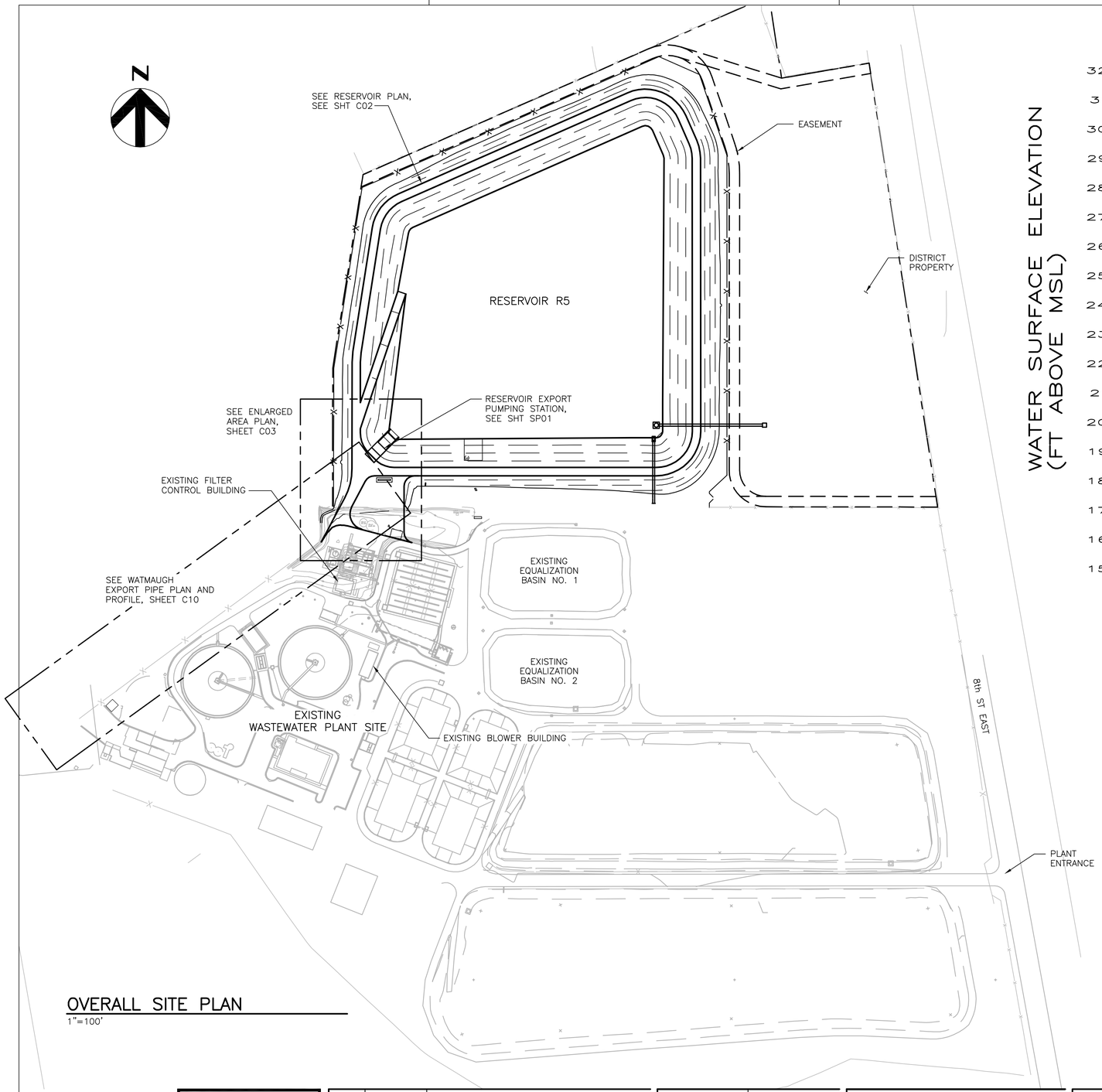

OVERALL SITE PLAN
1"=100'

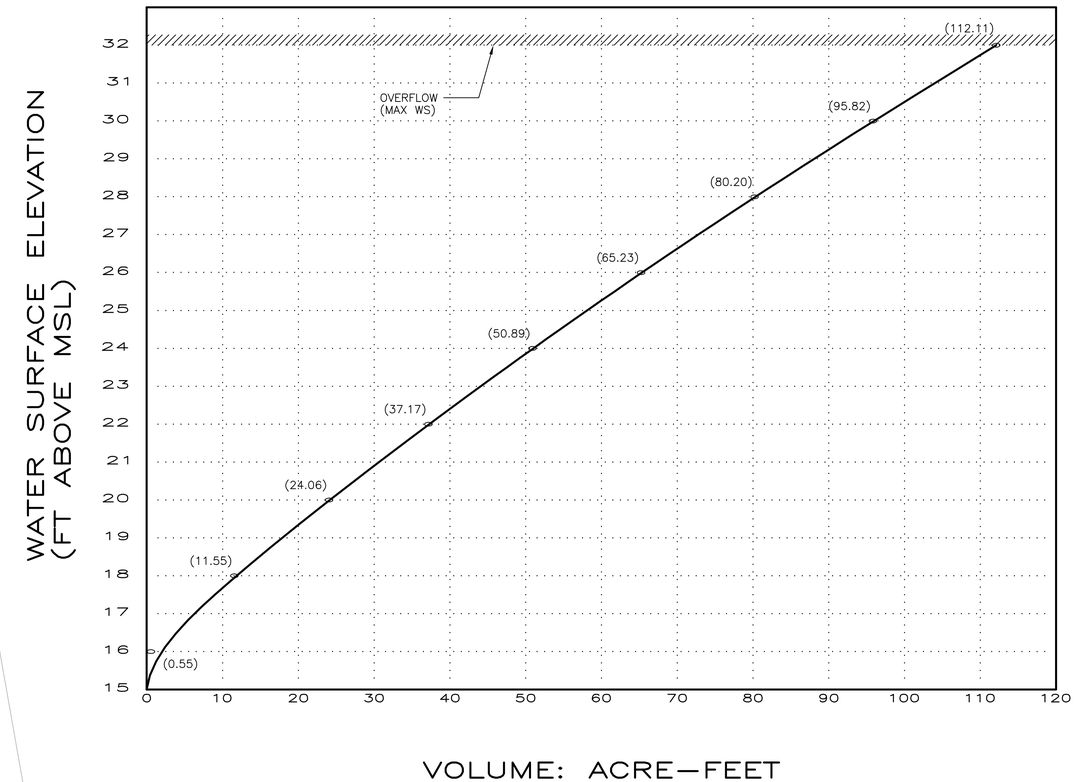

RESERVOIR R5 CAPACITY CURVE
AS NOTED

HDR
HDR Engineering, Inc.

ISSUE	DATE	DESCRIPTION
0	1/20/2011	ISSUED FOR BID

PROJECT MANAGER	CRAIG OLSON, PE
DESIGNED	R. NATOLI
CHECKED	C. OLSON
DRAWN	P. VAN MEURS
PROJECT NUMBER	9240-144993
DISTRICT PROJECT	7487

APPROVED

APPROVED

REGISTERED PROFESSIONAL ENGINEER CRAIG A. OLSON NO. 39819 EXP. 12-31-11 CIVIL STATE OF CALIFORNIA
1/20/11

North Bay Water Reuse Program
Sonoma Valley Effluent Reservoir R5

Sonoma Valley County Sanitation District

CIVIL

OVERALL SITE PLAN AND RESERVOIR CAPACITY CURVE

0 1" 2"

FILENAME	144993_C01.dwg
SCALE	AS NOTED

SHEET **C01**

COORDINATE TABLE

1	N 1854683.02	E 6433902.30
2	N 1854555.43	E 6433782.96
3	N 1854605.64	E 6433783.02
4	N 1854813.70	E 6433870.09
5	N 1854927.55	E 6433889.82
6	N 1855121.08	E 6434328.99
7	N 1855073.72	E 6434349.72
8	N 1854550.49	E 6434350.09
9	N 1854473.54	E 6433774.94

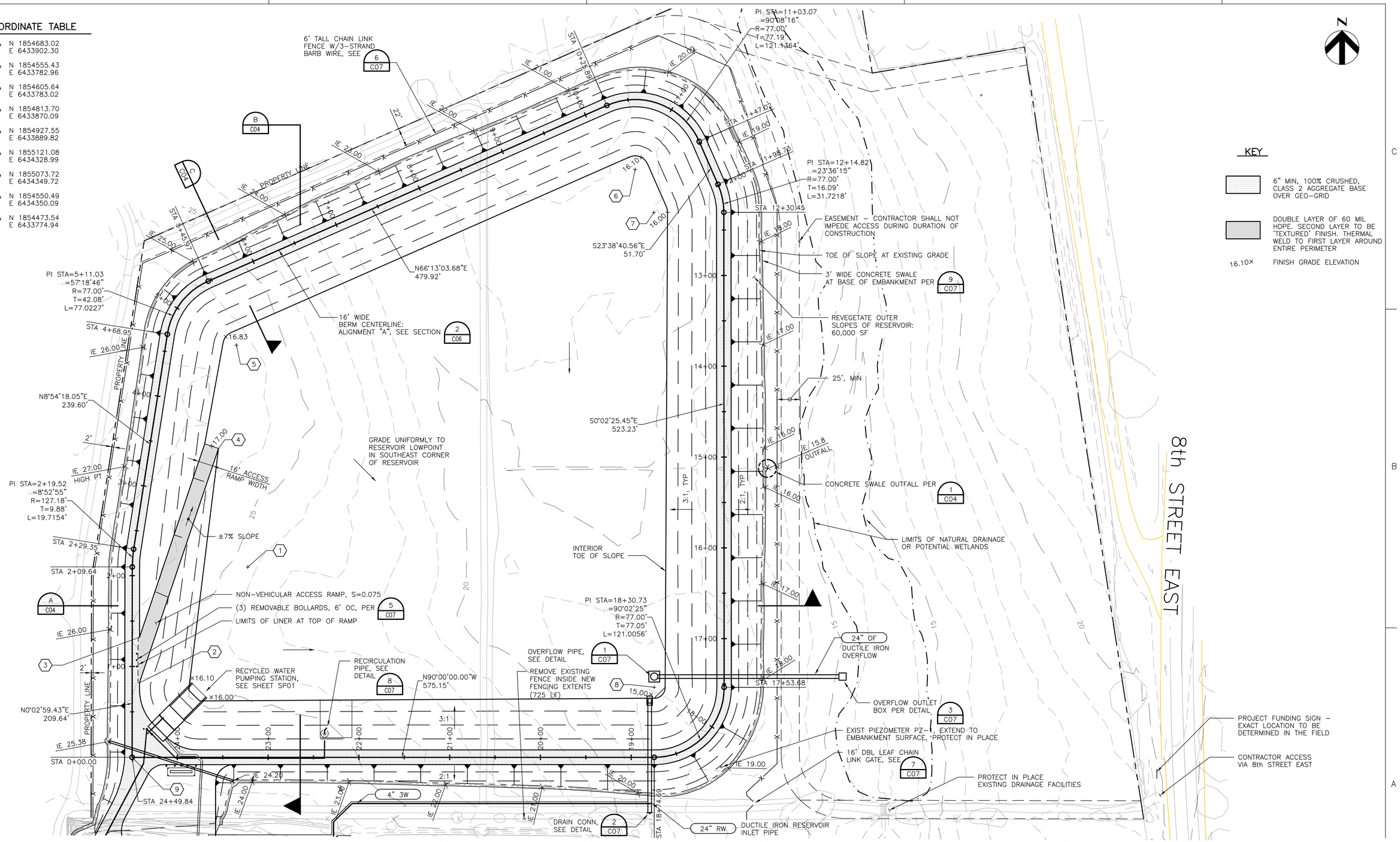

0	1/20/2011	ISSUED FOR BID
ISSUE	DATE	DESCRIPTION

PROJECT MANAGER	CRAIG OLSON, PE
DESIGNED	R. NATOLI
CHECKED	C. OLSON
DRAWN	P. VAN MEURS
PROJECT NUMBER	9240-144993
DISTRICT PROJECT	7487

APPROVED

APPROVED

REGISTERED PROFESSIONAL ENGINEER CRAIG A. OLSON NO. 39819 EXP. 12-31-11 CIVIL STATE OF CALIFORNIA 1/20/11

HDR Engineering, Inc.

North Bay Water Reuse Program
Sonoma Valley Effluent Reservoir R5

Sonoma Valley County Sanitation District

CIVIL

EFFLUENT STORAGE RESERVOIR SITE PLAN

0 1" 2"

FILENAME	144993_C02.dwg
SCALE	1"=50'

SHEET **C02**

(3) REMOVABLE BOLLARDS PER DETAIL 5 C07

(2) FIXED BOLLARDS PER DETAIL 4 C07

INV EL 25.38

12" CMP

PROPERTY LINE

N 1854519.83
E 6433804.76

EXPORT PUMPING STATION, SEE SHEET SP01

N 1854503.21
E 6433821.38

(2) 2" ELEC CONDUITS (FUTURE CHEM), SEE SHT SP01 FOR STUB-UP LOCATION

MCC-R SLAB W/ METAL OVERHEAD CANOPY, SEE DETAIL 1 SP04

N 1854461.99
E 6433813.93

FG 34.0

20'

SWITCHGEAR

N 1854445.49
E 6433810.18

GRADE AREA TO UNIFORM SLOPE

(5) REMOVABLE BOLLARDS PER DETAIL 5 C07

GRADE UNIFORMLY TO CONNECTION W/ EXISTING ROAD, ±4.5%

18" RW
WATMAUGH EXPORT PIPE, SEE SHT C10

CONCRETE SWALE DETAIL 9 C07

INV EL 27.83

N 1854392.15
E 6433793.19

N 1854363.98
E 6433843.72

YH-1

REMOVE EXIST AC CURB AT TIE-IN TO GRAVELLED ROAD, MATCH GRADES

SEE SHT C10 FOR CONTINUATION

DOUBLE LINER IN THIS AREA

35'

5'

8" RW
RECIRCULATION

8 C07 RECIRCULATION PIPE LINER PENETRATION DETAIL

9 C07 CONCRETE SWALE DETAIL

INV EL 24.20

N 1854445.49
E 6433886.94

9 C07 CONCRETE SWALE DETAIL

INV EL 27.33

N 1854358.79
E 6433864.06

1/2" CHEM
AQUA-SHADE

CHEMICAL FEED AREA, PLACE BEHIND EXIST CURB, SEE SHT C08

1/2" CHEM
FUTURE AQUA-SHADE

ELEC PULLBOXES

4" 3W
RESERVOIR FILL

METERING/ CONTROL STATION

N 1854383.30
E 6434001.31

SEE ENLARGED PLAN, SHEET C08

SEE SHEET C09 FOR CONTINUATION

NOTES:

1. MINIMUM BURIAL DEPTH FOR 4" 3W PIPE IS 3'-6" COVER.

KEY

6" MIN, 100% CRUSHED CLASS 2 AGGREGATE BASE OVER GEO-GRID

HDR

HDR Engineering, Inc.

ISSUE	DATE	DESCRIPTION
0	1/20/2011	ISSUED FOR BID

PROJECT MANAGER	CRAIG OLSON, PE
DESIGNED	R. NATOLI
CHECKED	C. OLSON
DRAWN	P. VAN MEURS
PROJECT NUMBER	9240-144993
DISTRICT PROJECT	7487

APPROVED

APPROVED

REGISTERED PROFESSIONAL ENGINEER CRAIG A. OLSON NO. 39819 EXP. 12-31-11 CIVIL STATE OF CALIFORNIA

1/20/11

North Bay Water Reuse Program
Sonoma Valley Effluent Reservoir R5

Sonoma Valley County Sanitation District

CIVIL

EFFLUENT STORAGE RESERVOIR ENLARGED AREA PLAN

0 1" 2"

FILENAME	144993_C03.dwg
SCALE	1"=20'

SHEET **C03**

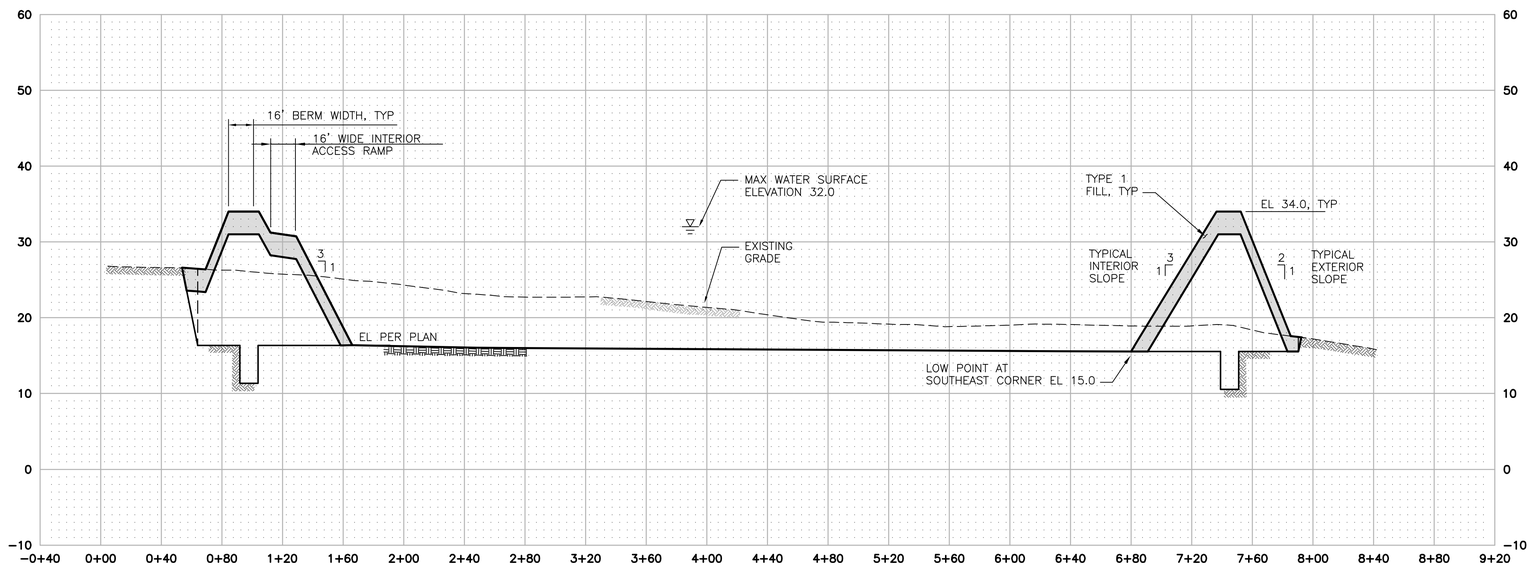

SECTION THROUGH POND

HORIZ: 1"=50'
VERT: 1"=10'

A / C02

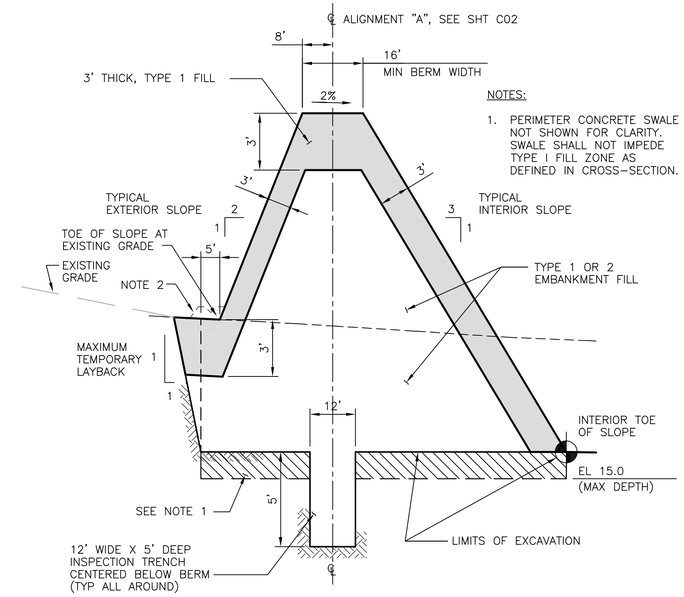

NOTES:

1. PERIMETER CONCRETE SWALE NOT SHOWN FOR CLARITY. SWALE SHALL NOT IMPEDE TYPE I FILL ZONE AS DEFINED IN CROSS-SECTION.

TYPICAL CROSS-SECTION

VERT: 1"=4', HORIZ: 1'=20'

C / C02

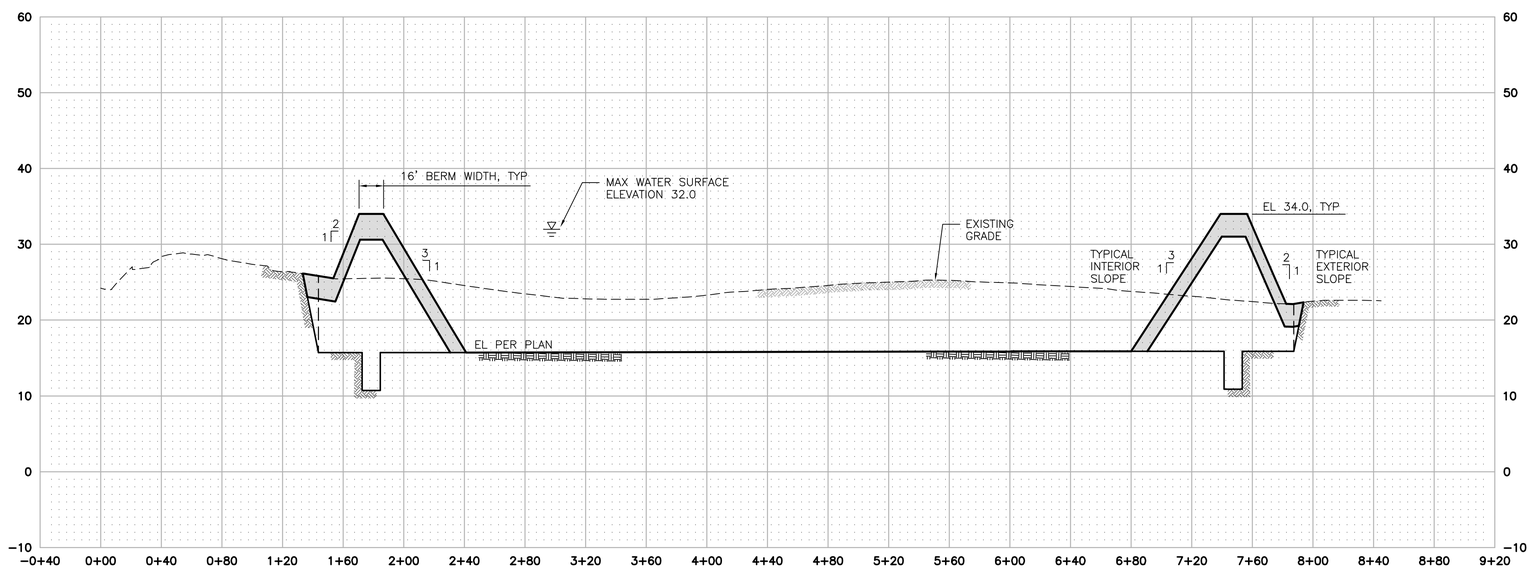

SECTION THROUGH POND

HORIZ: 1"=50'
VERT: 1"=10'

B / C02

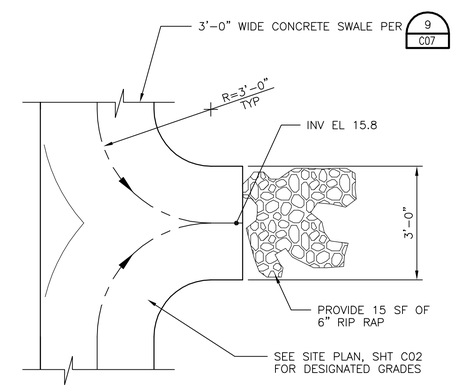

CONCRETE SWALE OUTFALL

NTS

1 / C02

NOTES:

1. LIMITS OF POTENTIAL OVEREXCAVATION. EXACT EXTENTS OF OVEREXCAVATION (IF REQUIRED) TO BE DETERMINED BY OWNER DURING GRADING OPERATION. OVEREXCAVATION IS REQUIRED FOR REMOVAL OF SURFICIAL CLAY OR LOOSE SOIL LAYER BENEATH RESERVOIR EMBANKMENTS.
2. PERIMETER CONCRETE SWALE NOT SHOWN FOR CLARITY. SWALE SHALL NOT IMPEDE TYPE I FILL ZONE AS DEFINED IN TYPICAL CROSS-SECTION.

HDR Engineering, Inc.

ISSUE	DATE	DESCRIPTION
0	1/20/2011	ISSUED FOR BID

PROJECT MANAGER	CRAIG OLSON, PE
DESIGNED	R. NATOLI
CHECKED	C. OLSON
DRAWN	P. VAN MEURS
PROJECT NUMBER	9240-144993
DISTRICT PROJECT	7487

APPROVED

APPROVED

REGISTERED PROFESSIONAL ENGINEER CRAIG A. OLSON NO. 39819 EXP. 12-31-11 CIVIL STATE OF CALIFORNIA 1/20/11

North Bay Water Reuse Program
Sonoma Valley Effluent Reservoir R5

Sonoma Valley County Sanitation District

CIVIL

EFFLUENT STORAGE RESERVOIR SECTIONS AND DETAILS I

0 1" 2"

FILENAME	144993_C04.dwg
SCALE	AS NOTED

SHEET **C04**

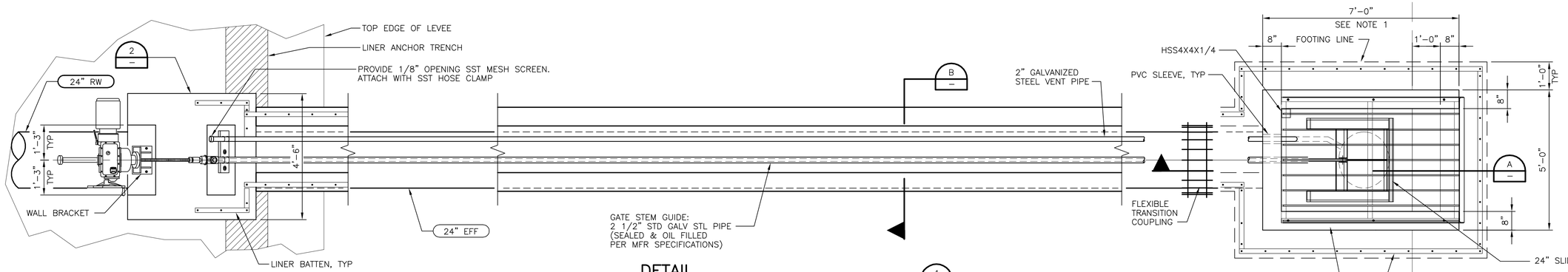

NOTES:

1. FINAL DIMENSION TO BE DETERMINED AFTER SLIDE GATE IS APPROVED.

DETAIL 1 (C02)
1/2" = 1'-0"

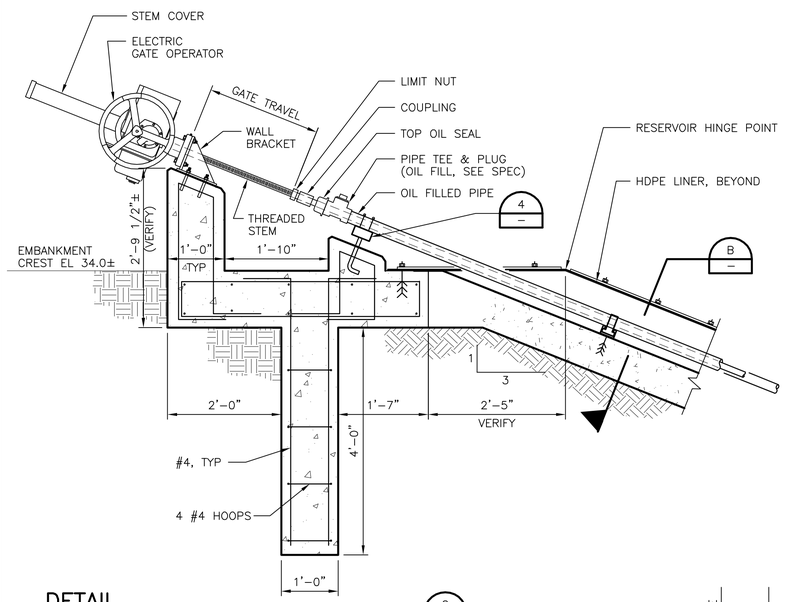

DETAIL 2
3/4" = 1'-0"

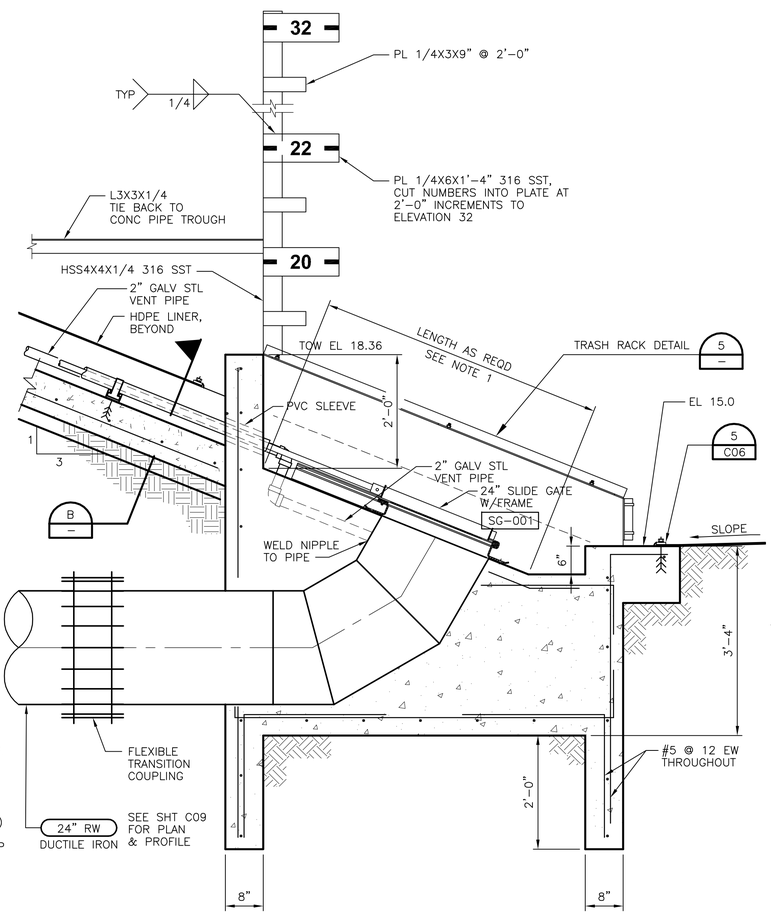

SECTION A
3/4" = 1'-0"

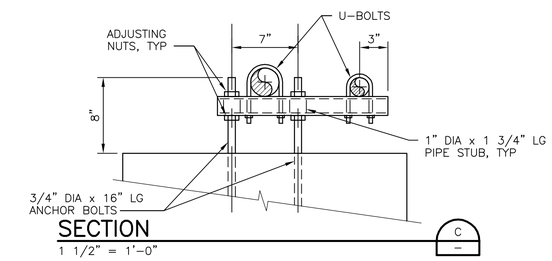

SECTION C
1 1/2" = 1'-0"

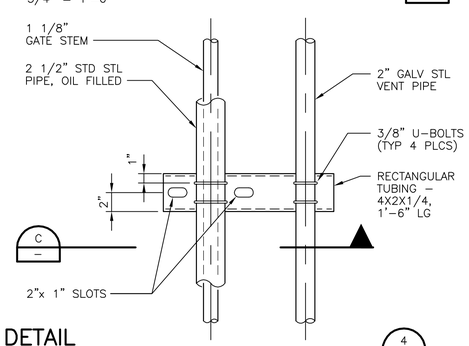

DETAIL 4
1 1/2" = 1'-0"

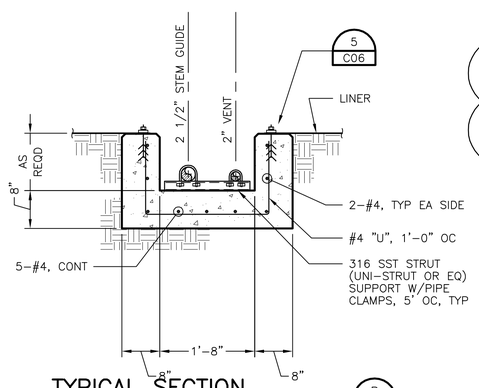

TYPICAL SECTION B
3/4" = 1'-0"

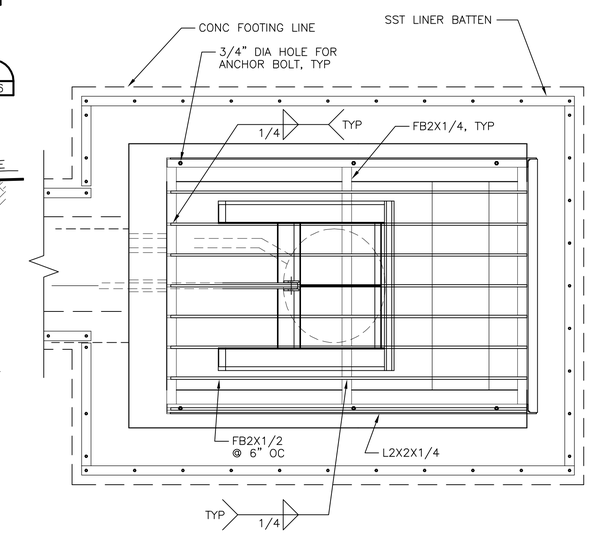

TRASH RACK DETAIL 5
3/4" = 1'-0"

HDR
HDR Engineering, Inc.

ISSUE	DATE	DESCRIPTION
0	1/20/2011	ISSUED FOR BID

PROJECT MANAGER	CRAIG OLSON, PE
DESIGNED	R. NATOLI
CHECKED	C. OLSON
DRAWN	P. VAN MEURS
PROJECT NUMBER	9240–144993
DISTRICT PROJECT	7487

APPROVED

APPROVED

REGISTERED PROFESSIONAL ENGINEER CRAIG A. OLSON NO. 39819 EXP. 12-31-11 CIVIL STATE OF CALIFORNIA
1/20/11

North Bay Water Reuse Program
Sonoma Valley Effluent Reservoir R5

Sonoma Valley County Sanitation District

CIVIL

EFFLUENT STORAGE RESERVOIR SECTIONS AND DETAILS II

0 1" 2"

FILENAME	144993_C05.dwg
SCALE	AS NOTED

SHEET **C05**

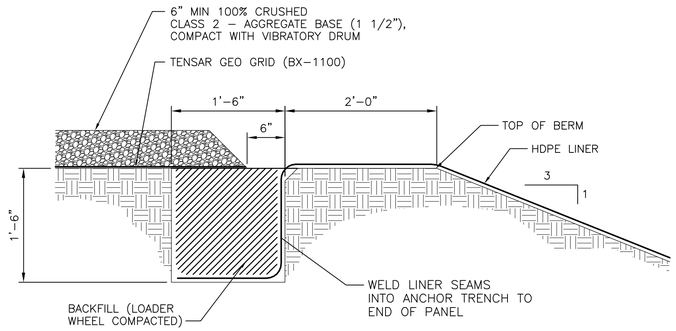

TYPICAL ANCHOR TRENCH

NTS — EXPOSED LINING SYSTEM — 1 / –

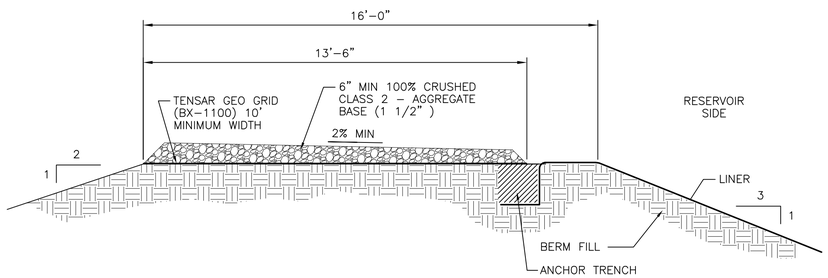

ROADWAY CROSS–SECTION

NTS — 2 / –

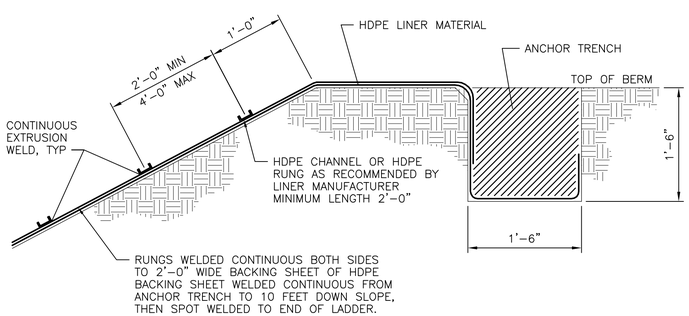

NOTE:
SAFETY LADDERS SHALL BE LOCATED AT 100' OC AROUND RESERVOIR.

HDPE SAFETY LADDER

NTS — 3 / –

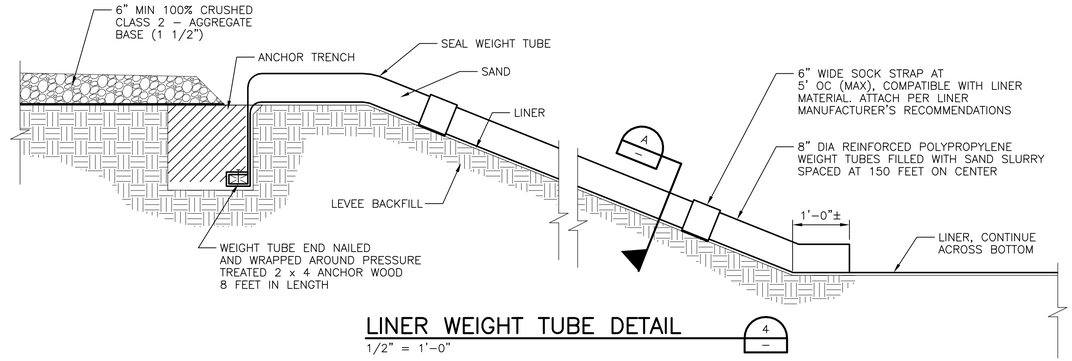

LINER WEIGHT TUBE DETAIL

1/2" = 1'–0" — 4 / –

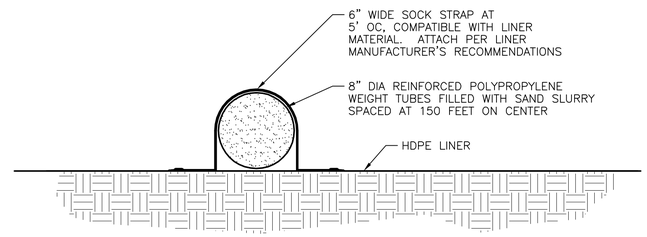

WEIGHT TUBE SECTION

NTS — A / –

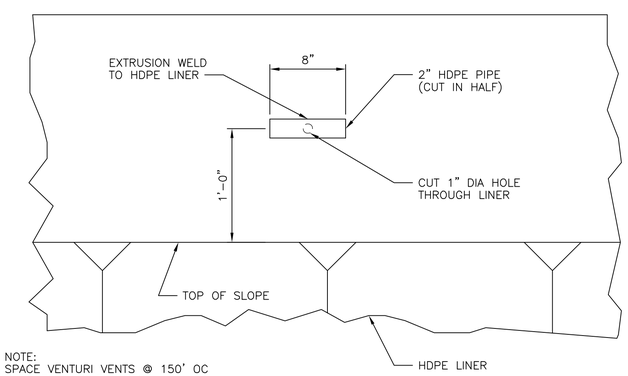

NOTE:
SPACE VENTURI VENTS @ 150' OC BETWEEN WEIGHT TUBES.

VENTURI VENT DETAIL

NTS — 8 / –

NOTES:
CLEAN AND DUST CONCRETE WASTE FROM HOLE PRIOR TO PLACING EPOXY

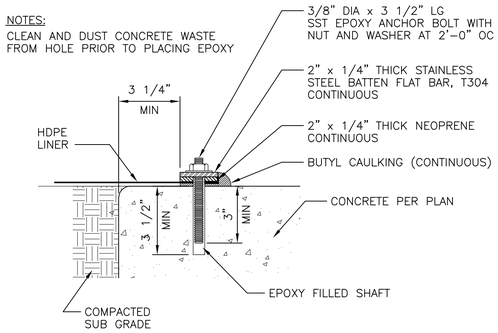

STAINLESS STEEL BATTEN W/ EPOXY BOLT DETAIL

3" = 1'–0" — 5 / –

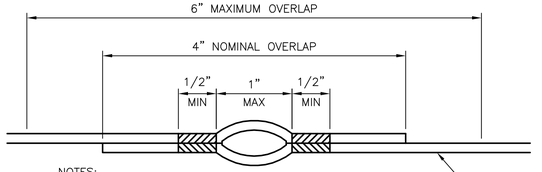

NOTES:
AIR PRESSURE TESTING IS THE PRIMARY METHOD FOR TESTING DOUBLE FUSION WELDING

DOUBLE FUSION WELD DETAIL

NO SCALE — 6 / –

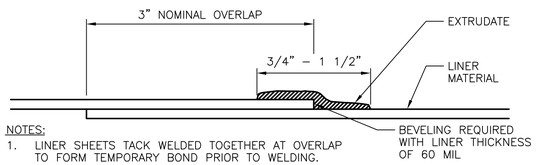

NOTES:
1. LINER SHEETS TACK WELDED TOGETHER AT OVERLAP TO FORM TEMPORARY BOND PRIOR TO WELDING.
2. GRINDING NOT TO EXCEED 1/4" PAST 'SQUEEZE–OUT' ON EITHER SIDE. PROPER CARE SHOULD BE TAKEN IN NOT REMOVING TOO MUCH MATERIAL WHEN GRINDING
3. VACUUM TESTING IS THE NONDESTRUCTIVE SEAM TEST METHOD FOR EXTRUSION WELDS

EXTRUSION WELD DETAIL

NO SCALE — 7 / –

HDR Engineering, Inc.

ISSUE	DATE	DESCRIPTION
0	1/20/2011	ISSUED FOR BID

PROJECT MANAGER	CRAIG OLSON, PE
DESIGNED	R. NATOLI
CHECKED	C. OLSON
DRAWN	P. VAN MEURS
PROJECT NUMBER	9240–144993
DISTRICT PROJECT	7487

APPROVED

APPROVED

REGISTERED PROFESSIONAL ENGINEER CRAIG A. OLSON NO. 39819 EXP. 12–31–11 CIVIL STATE OF CALIFORNIA
1/20/11

North Bay Water Reuse Program
Sonoma Valley Effluent Reservoir R5

Sonoma Valley County Sanitation District

CIVIL

EFFLUENT STORAGE RESERVOIR SECTIONS AND DETAILS III

0 1" 2"

FILENAME	144993_C06.dwg
SCALE	AS NOTED

SHEET **C06**

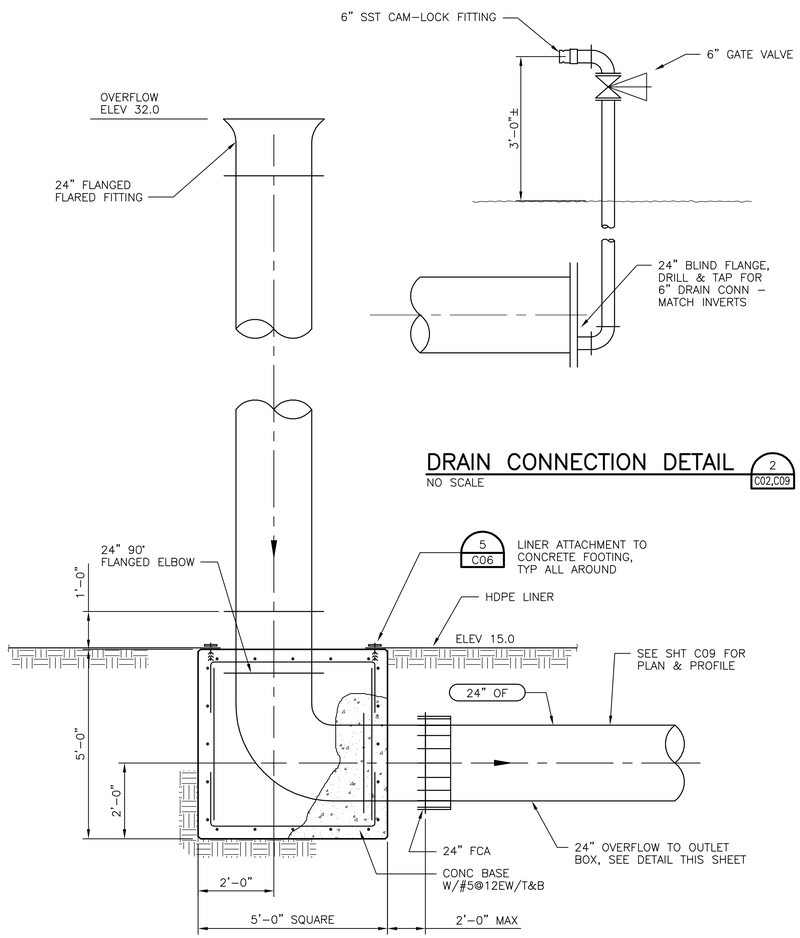

DRAIN CONNECTION DETAIL (2 / C02,C09)

NO SCALE

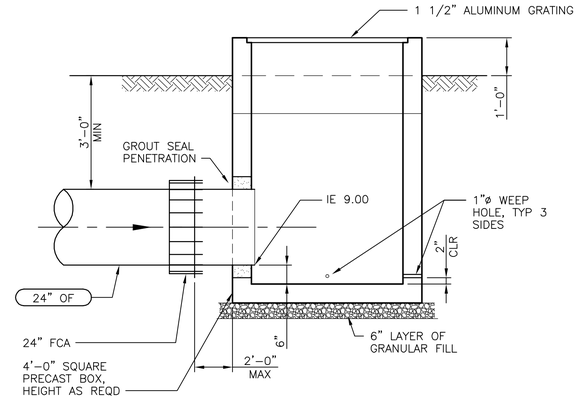

RESERVOIR OVERFLOW OUTLET BOX DETAIL (3 / C02)

1/2"=1'-0"

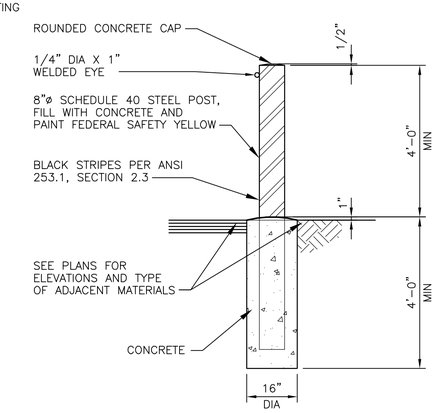

BOLLARD DETAIL (4 / –)

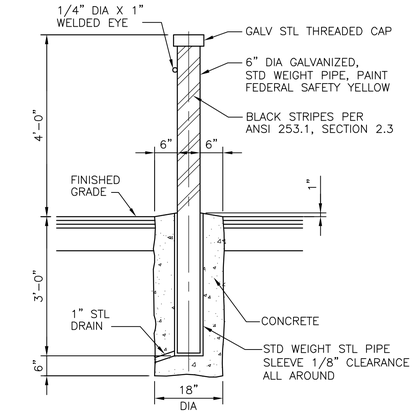

REMOVABLE BOLLARD DETAIL (5 / –)

NO SCALE

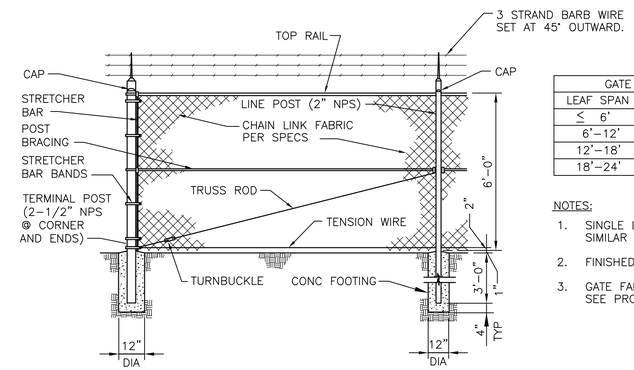

CHAIN LINK FENCE (6 / –)

NO SCALE

GATE POST SCHEDULE	
LEAF SPAN	NOMINAL DIAMETER
≤ 6'	3"
6'–12'	5"
12'–18'	6"
18'–24'	8"

NOTES:

1. SINGLE LEAF GATES TO BE REINFORCED SIMILAR TO DOUBLE SWING GATE DETAIL.
2. FINISHED GRADE PER SITE GRADING.
3. GATE FABRIC TO MATCH THAT USED IN FENCE. SEE PROJECT SPECIFICATIONS.

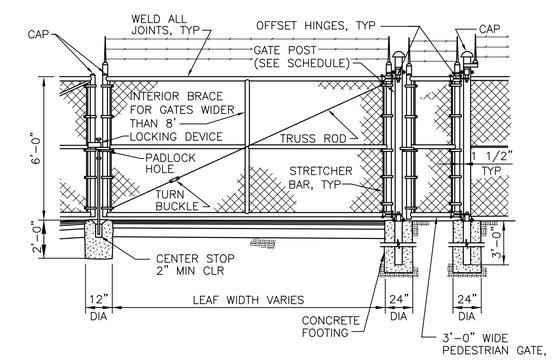

CHAIN LINK FENCE & GATE (7 / –)

NO SCALE

RESERVOIR OVERFLOW STANDPIPE DETAIL (1 / C09)

1/2"=1'-0"

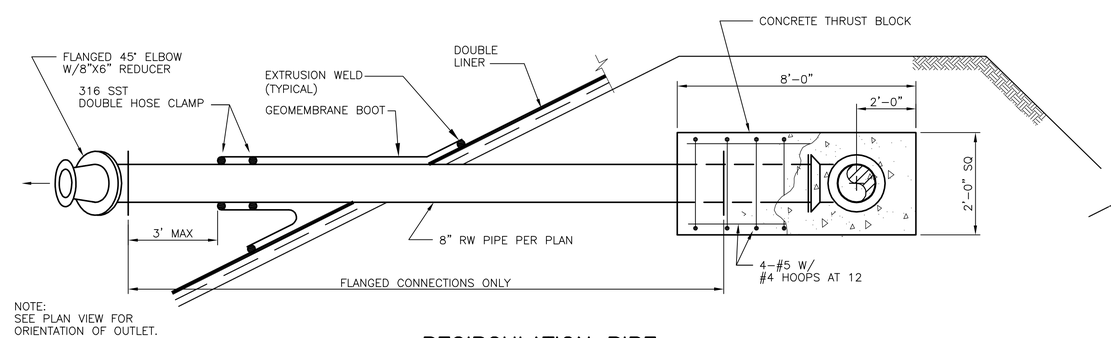

RECIRCULATION PIPE LINER PENETRATION DETAIL (8 / –)

NO SCALE

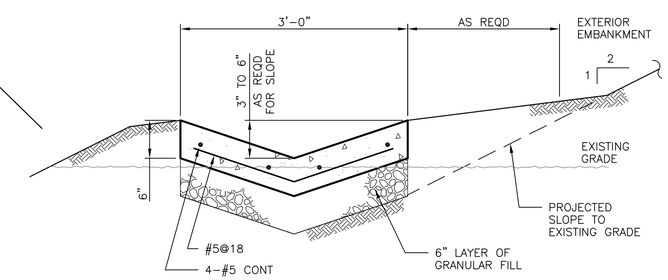

CONCRETE SWALE DETAIL (9 / –)

NO SCALE

HDR

HDR Engineering, Inc.

ISSUE	DATE	DESCRIPTION
0	1/20/2011	ISSUED FOR BID

PROJECT MANAGER	CRAIG OLSON, PE
DESIGNED	R. NATOLI
CHECKED	C. OLSON
DRAWN	P. VAN MEURS
PROJECT NUMBER	9240–144993
DISTRICT PROJECT	7487

APPROVED

APPROVED

REGISTERED PROFESSIONAL ENGINEER CRAIG A. OLSON NO. 39819 EXP. 12-31-11 CIVIL STATE OF CALIFORNIA

1/20/11

North Bay Water Reuse Program
Sonoma Valley Effluent Reservoir R5

Sonoma Valley County Sanitation District

CIVIL

EFFLUENT STORAGE RESERVOIR SECTIONS AND DETAILS IV

0 1" 2"

FILENAME	144993_C07.dwg
SCALE	AS NOTED

SHEET **C07**

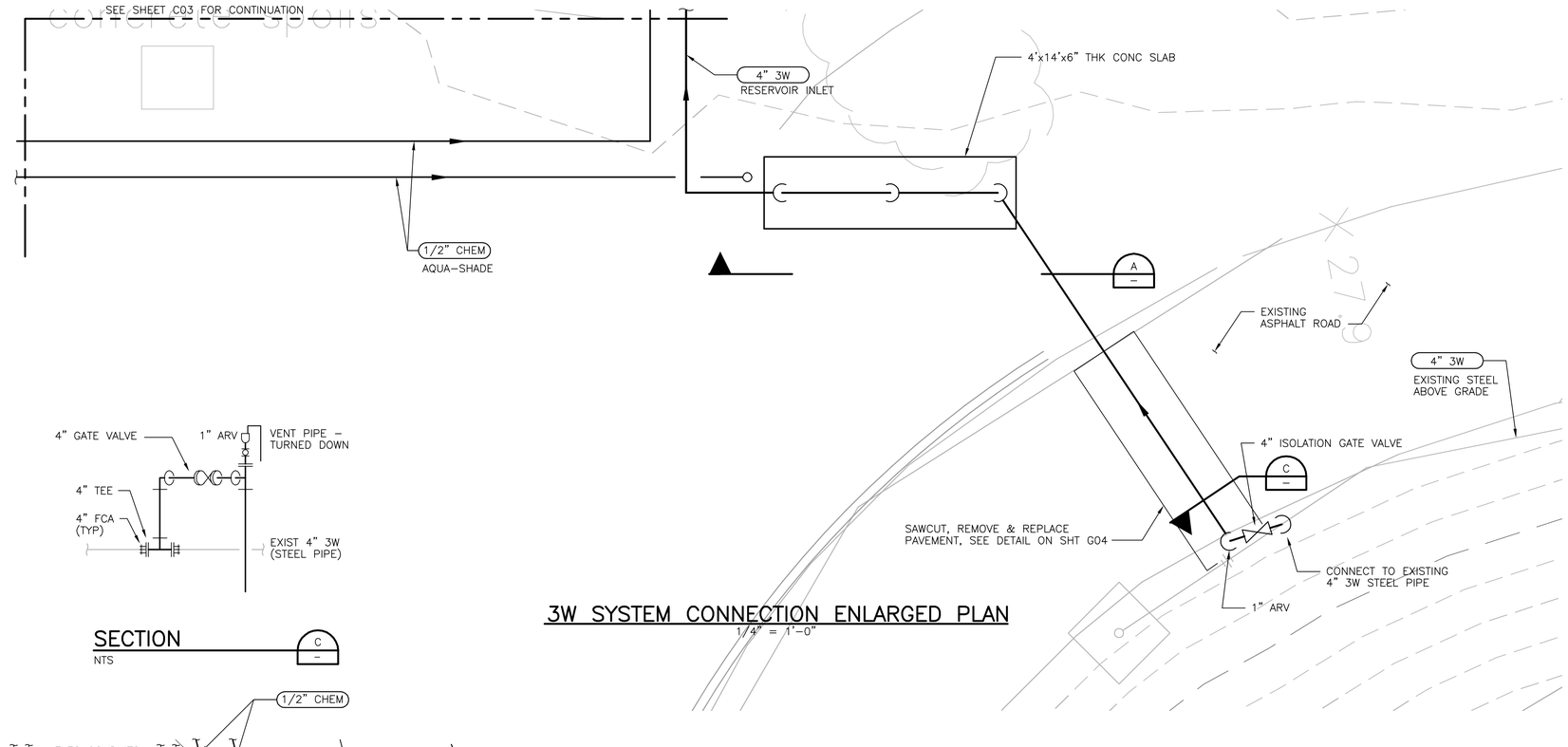

3W SYSTEM CONNECTION ENLARGED PLAN

1/4" = 1'-0"

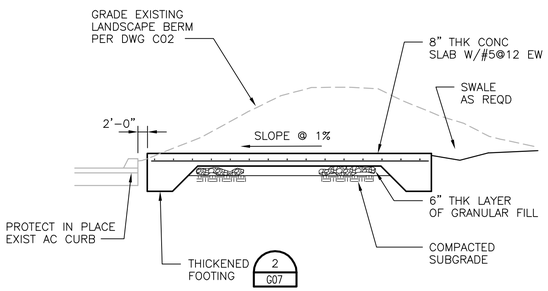

CHEM FEED SLAB SECTION

1/4"=1'-0"

B

SECTION

NTS

C

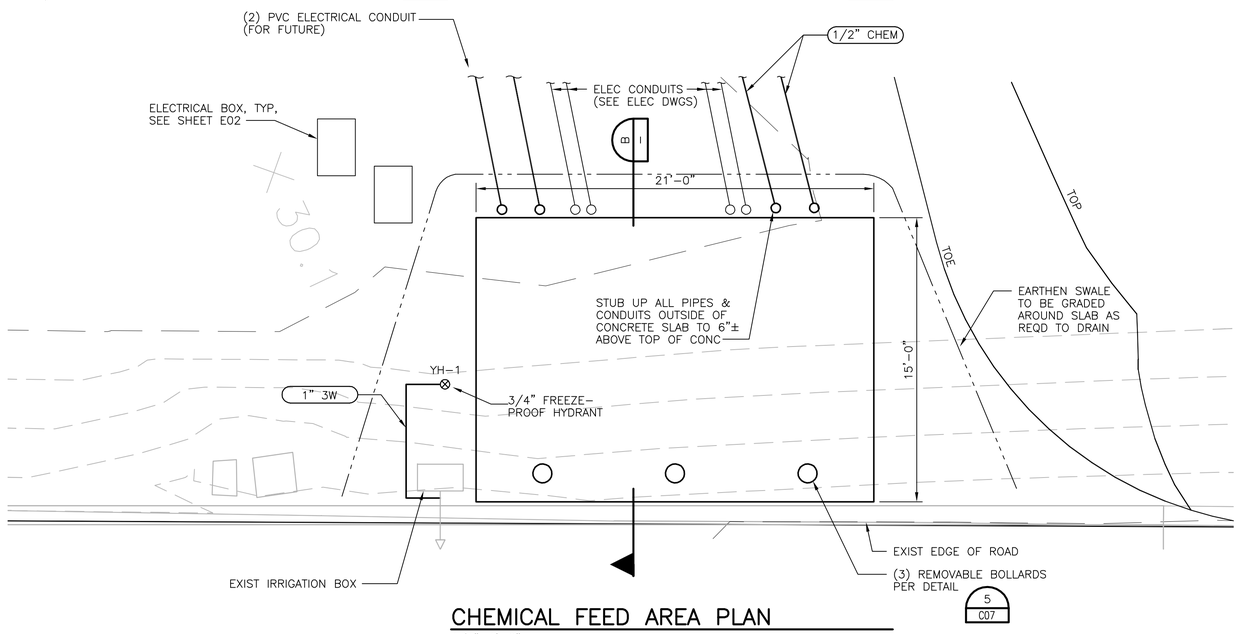

CHEMICAL FEED AREA PLAN

1/4"=1'-0"

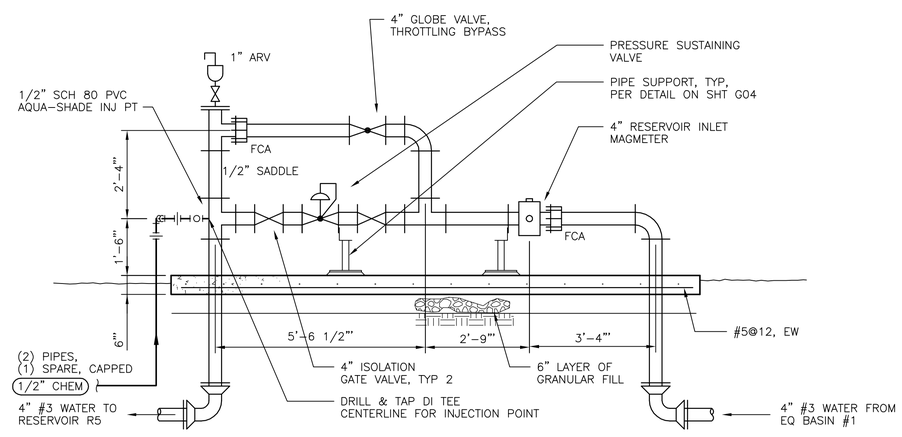

3W SYSTEM CONNECTION PIPING MANIFOLD SECTION

1/2"=1'-0"

A

HDR

HDR Engineering, Inc.

ISSUE	DATE	DESCRIPTION
0	1/20/2011	ISSUED FOR BID

PROJECT MANAGER	CRAIG OLSON, PE
DESIGNED	R. NATOLI
CHECKED	C. OLSON
DRAWN	P. VAN MEURS
PROJECT NUMBER	9240-144993
DISTRICT PROJECT	7487

APPROVED

APPROVED

REGISTERED PROFESSIONAL ENGINEER CRAIG A. OLSON NO. 39819 EXP. 12-31-11 CIVIL STATE OF CALIFORNIA

1/20/11

North Bay Water Reuse Program

Sonoma Valley Effluent Reservoir R5

Sonoma Valley County Sanitation District

CIVIL

RESERVOIR INLET PIPE AND CHEMICAL FEED AREA PLANS, SECTIONS AND DETAILS

0 1" 2"

FILENAME	144993_C08.dwg
SCALE	AS NOTED

SHEET **C08**

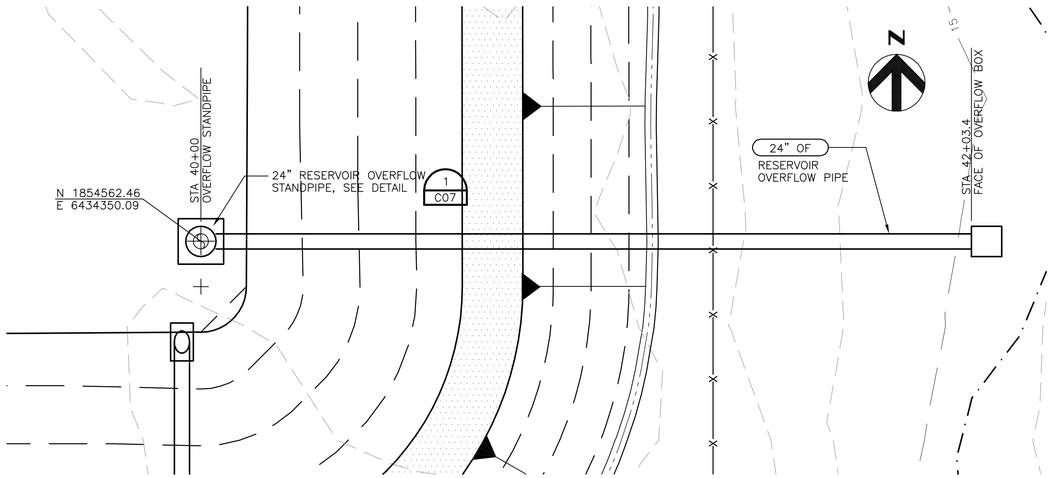

24" RESERVOIR OVERFLOW PIPE PLAN

1"=20'

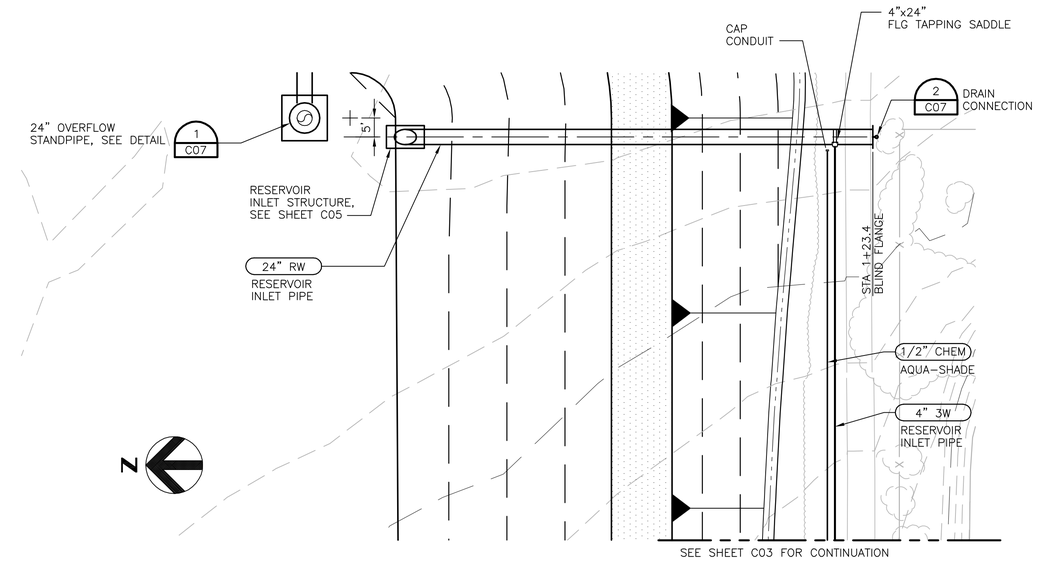

24" RESERVOIR INLET PIPE PLAN

1"=20'

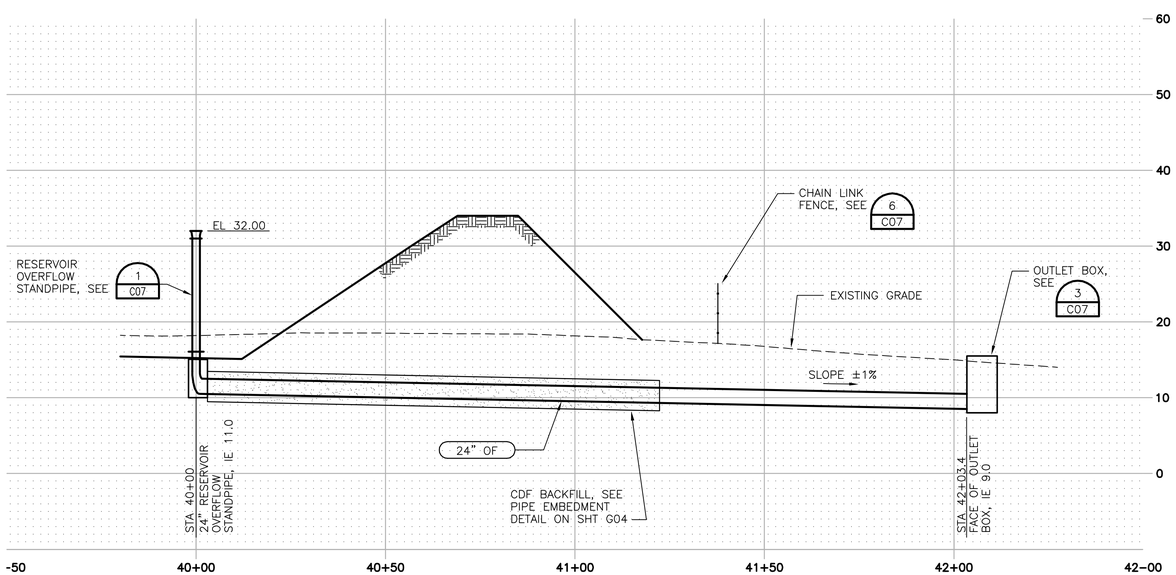

24" RESERVOIR OVERFLOW PIPE PROFILE

HORIZ: 1"=20'
VERT: 1"=10'

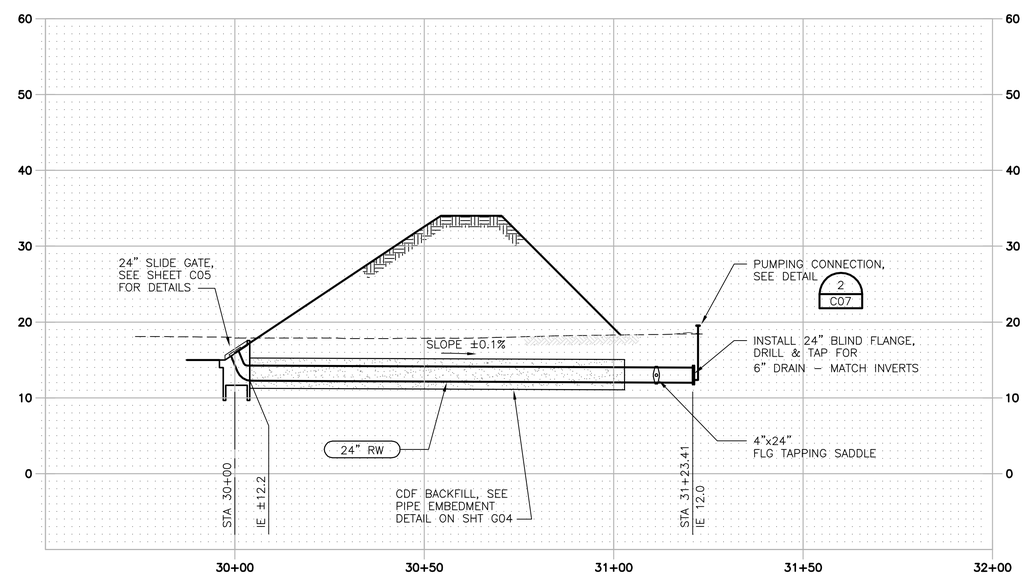

24" RESERVOIR INLET PIPE PROFILE

HORIZ: 1"=20'
VERT: 1"=10'

HDR
HDR Engineering, Inc.

ISSUE	DATE	DESCRIPTION
0	1/20/2011	ISSUED FOR BID

PROJECT MANAGER	CRAIG OLSON, PE
DESIGNED	R. NATOLI
CHECKED	C. OLSON
DRAWN	P. VAN MEURS
PROJECT NUMBER	9240–144993
DISTRICT PROJECT	7487

APPROVED

APPROVED

REGISTERED PROFESSIONAL ENGINEER CRAIG A. OLSON NO. 39819 EXP. 12-31-11 CIVIL STATE OF CALIFORNIA
1/20/11

North Bay Water Reuse Program
Sonoma Valley Effluent Reservoir R5

Sonoma Valley County Sanitation District

CIVIL

24" RESERVOIR INLET PIPE & 24" OVERFLOW PIPE PLAN AND PROFILES

0 1" 2"

FILENAME	144993_C09.dwg
SCALE	AS NOTED

SHEET **C09**

ALIGNMENT LINE TABLE				
LINE NO.	LENGTH	DIRECTION	START POINT (N,E)	END POINT (N,E)
L-1	37.93'	S5°17'04"W	1854504.4412, 6433791.16	1854466.67, 6433787.67
L-2	98.47'	S27°47'04"W	1854466.6700, 6433787.67	1854379.56, 6433741.77
L-3	86.65'	S32°01'20"W	1854379.5553, 6433741.77	1854306.09, 6433695.82
L-4	119.24'	S56°03'03"W	1854306.0888, 6433695.82	1854239.50, 6433596.91
L-5	43.84'	S67°18'03"W	1854239.5006, 6433596.91	1854222.58, 6433556.47
L-6	284.06'	S53°35'41"W	1854222.5826, 6433556.47	1854053.99, 6433327.84
L-7	40.90'	S8°35'41"W	1854053.9938, 6433327.84	1854013.56, 6433321.73
L-8	68.69'	S31°05'41"W	1854013.5571, 6433321.73	1853954.73, 6433286.25
L-9	55.20'	S19°50'41"W	1853954.7339, 6433286.25	1853902.82, 6433267.52

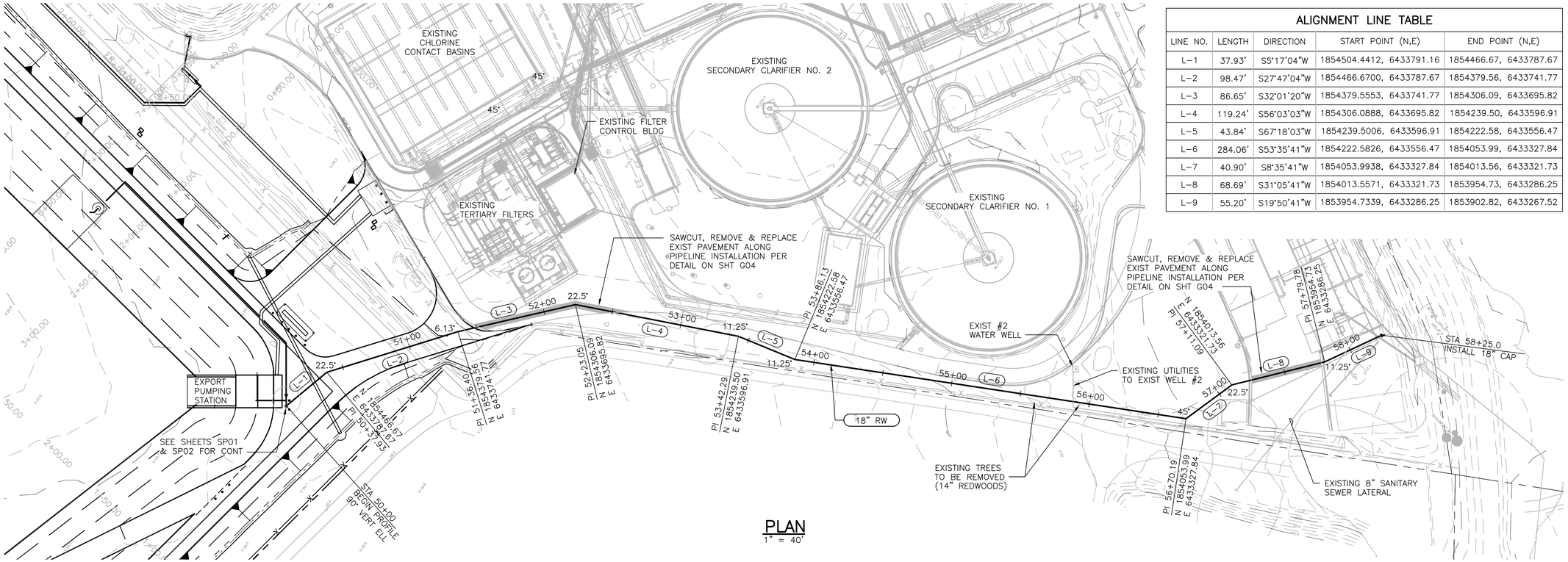

PLAN
1" = 40'

NOTES:

1. EXISTING NO. 2 WELLWATER ELECTRICAL CONDUITS AND WATER LINE. REMOVE AND REPLACE AS NECESSARY.

PROFILE
VERT : 1" = 10'
HORIZ: 1" = 40'

HDR
HDR Engineering, Inc.

ISSUE	DATE	DESCRIPTION
0	1/20/2011	ISSUED FOR BID

PROJECT MANAGER	CRAIG OLSON, PE
DESIGNED	R. NATOLI
CHECKED	C. OLSON
DRAWN	P. VAN MEURS
PROJECT NUMBER	9240-144993
DISTRICT PROJECT	7487

APPROVED

APPROVED

REGISTERED PROFESSIONAL ENGINEER CRAIG A. OLSON NO. 39819 EXP. 12-31-11 CIVIL STATE OF CALIFORNIA
1/20/11

North Bay Water Reuse Program
Sonoma Valley Effluent Reservoir R5

Sonoma Valley County Sanitation District

CIVIL

WATMAUGH EXPORT PIPE PLAN AND PROFILE

0 1" 2"

FILENAME	144993_C10.dwg
SCALE	AS NOTED

SHEET **C10**

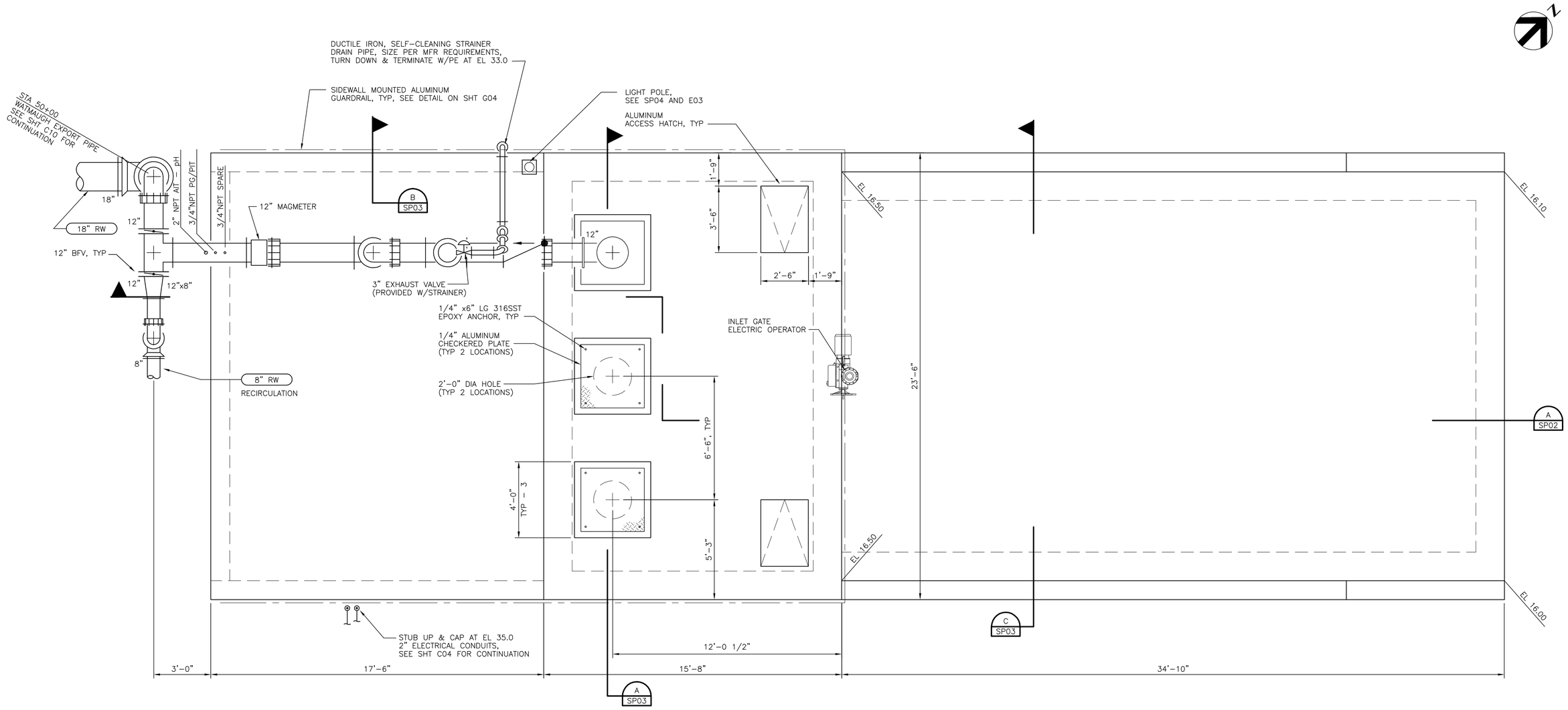

PUMPING STATION DECK PLAN (1 / SP01)

3/8" = 1'-0"

HDR

HDR Engineering, Inc.

ISSUE	DATE	DESCRIPTION
0	1/20/2011	ISSUED FOR BID

PROJECT MANAGER	CRAIG OLSON, PE
DESIGNED	R. NATOLI
CHECKED	C. OLSON
DRAWN	P. VAN MEURS
PROJECT NUMBER	9240-144993
DISTRICT PROJECT	7487

APPROVED

APPROVED

REGISTERED PROFESSIONAL ENGINEER CRAIG A. OLSON NO. 39819 EXP. 12-31-11 CIVIL STATE OF CALIFORNIA

1/20/11

North Bay Water Reuse Program

Sonoma Valley Effluent Reservoir R5

Sonoma Valley County Sanitation District

STRUCTURAL/PROCESS

RESERVOIR EXPORT PUMPING STATION DECK LEVEL PLAN

0 1" 2"

FILENAME	144993_SP01.dwg
SCALE	AS NOTED

SHEET **SP01**

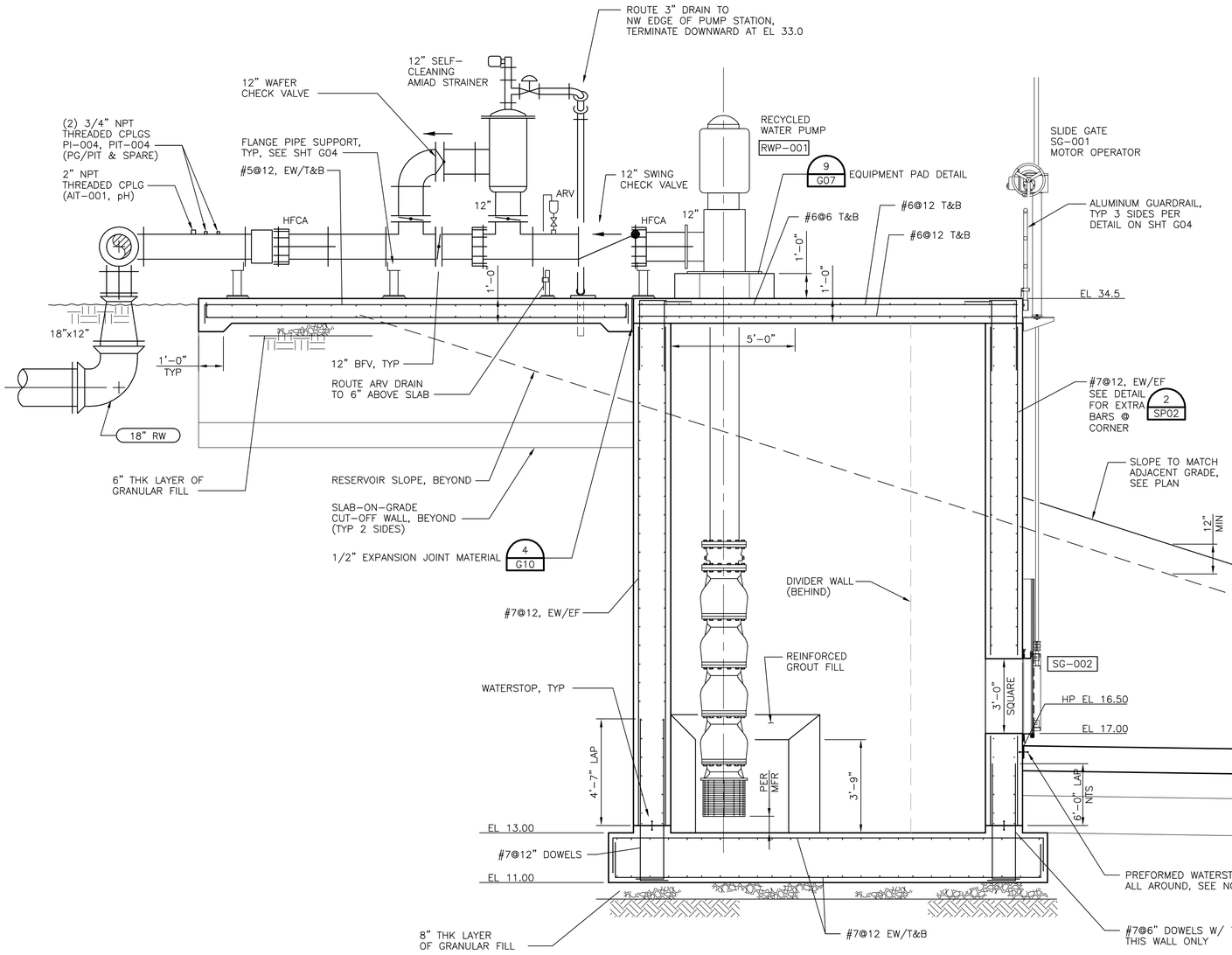

SECTION

3/8" = 1'-0"

A SP01

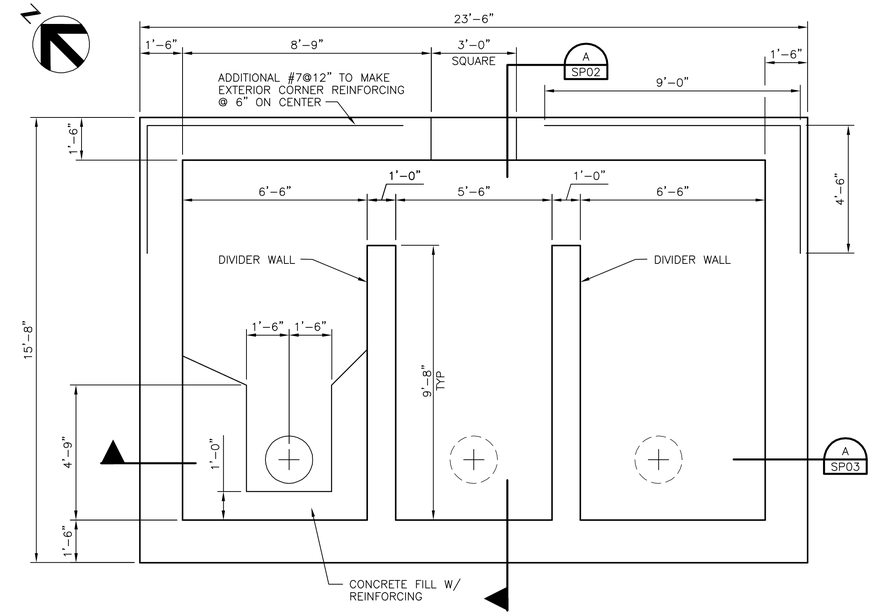

WETWELL PLAN

3/8" = 1'-0"

NOTES:

1. NO REINFORCING TO EXTEND ACROSS FROM PUMP STATION TO WING WALLS OR WING WALL SLAB. PROVIDE CONSTRUCTION JOINT.

HDR

HDR Engineering, Inc.

ISSUE	DATE	DESCRIPTION
0	1/20/2011	ISSUED FOR BID

PROJECT MANAGER	CRAIG OLSON, PE
DESIGNED	R. NATOLI
CHECKED	C. OLSON
DRAWN	P. VAN MEURS
PROJECT NUMBER	9240-144993
DISTRICT PROJECT	7487

APPROVED

APPROVED

REGISTERED PROFESSIONAL ENGINEER CRAIG A. OLSON NO. 39819 EXP. 12-31-11 CIVIL STATE OF CALIFORNIA

1/20/11

North Bay Water Reuse Program
Sonoma Valley Effluent Reservoir R5

Sonoma Valley County Sanitation District

STRUCTURAL/PROCESS

RESERVOIR EXPORT PUMPING STATION SECTIONS AND DETAILS I

0 1" 2"

FILENAME	144993_SP02.dwg
SCALE	AS NOTED

SHEET **SP02**

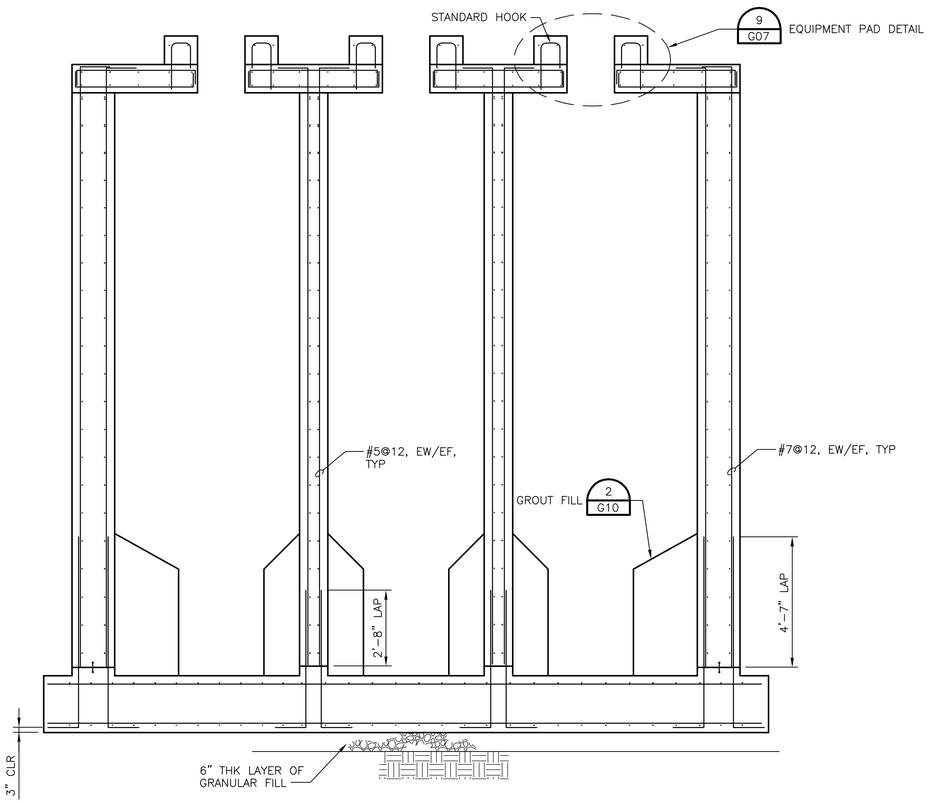

SECTION
3/8" = 1'-0"
A
SP01

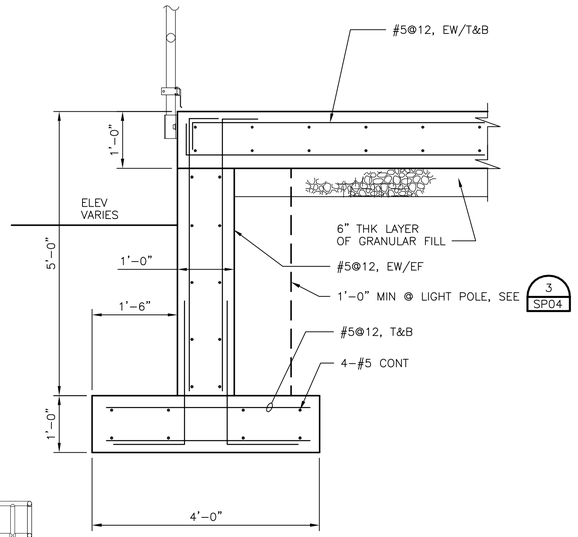

SECTION
3/4" = 1'-0"
B
SP01

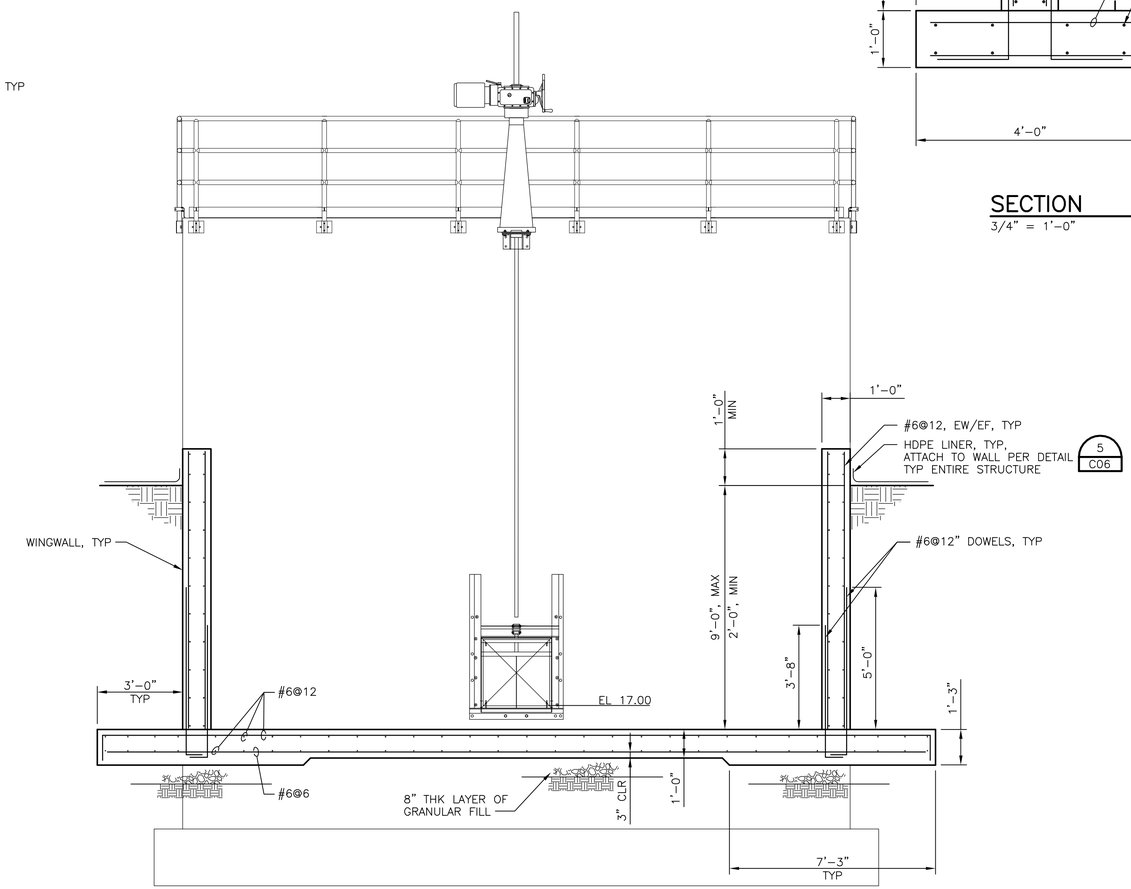

SECTION
3/8" = 1'-0"
C
SP01

HDR
HDR Engineering, Inc.

ISSUE	DATE	DESCRIPTION
0	1/20/2011	ISSUED FOR BID

PROJECT MANAGER	CRAIG OLSON, PE
DESIGNED	R. NATOLI
CHECKED	C. OLSON
DRAWN	P. VAN MEURS
PROJECT NUMBER	9240-144993
DISTRICT PROJECT	7487

APPROVED

APPROVED

REGISTERED PROFESSIONAL ENGINEER
CRAIG A. OLSON
NO. 39819
EXP. 12-31-11
CIVIL
STATE OF CALIFORNIA
1/20/11

North Bay Water Reuse Program
Sonoma Valley Effluent Reservoir R5

Sonoma Valley County Sanitation District

STRUCTURAL/PROCESS

RESERVOIR EXPORT PUMPING STATION SECTIONS AND DETAILS II

0 1" 2"

FILENAME	144993_SP03.dwg
SCALE	AS NOTED

SHEET
SP03

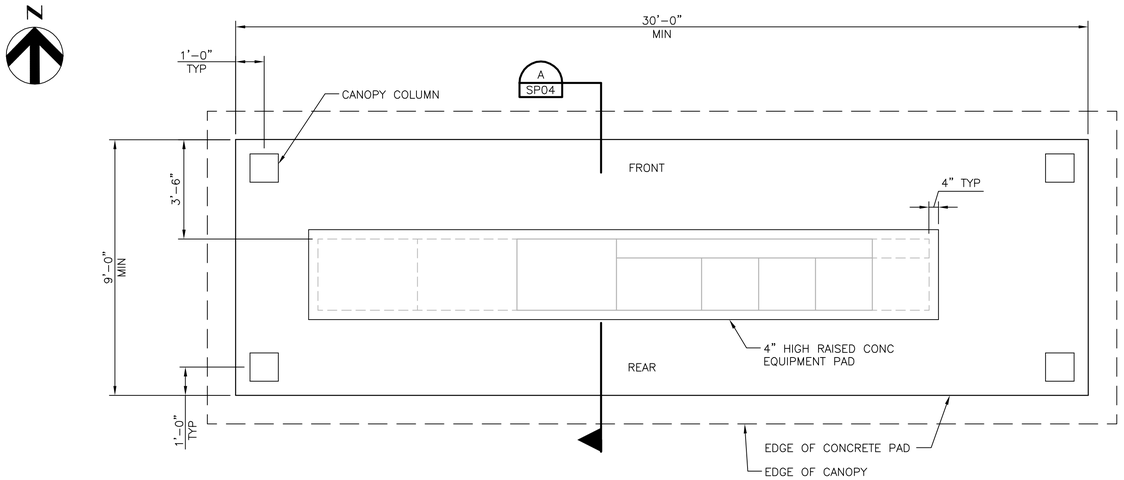

MOTOR CONTROL CENTER REINFORCED CONCRETE FOUNDATION

1 / C03

3/8" = 1'-0"

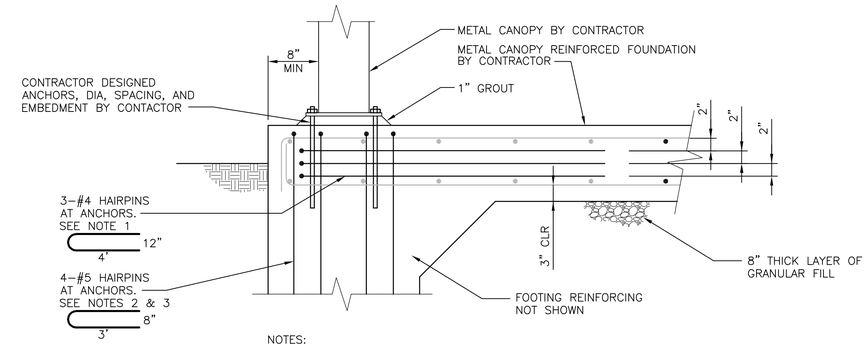

NOTES:

1. MINIMUM REINFORCING SHOWN: FOUNDATION, ANCHORS, AND REINFORCING BY CONTRACTOR.
2. CONTRACTOR TO VERIFY WITH ANCHOR LOCATION.
3. DEEPEN FOOTING @ ANCHORS AND VERTICAL HAIRPINS TO ACCOMMODATE HAIRPINS. 3" MIN CLEAR.

DETAIL AT COLUMN ANCHORAGE

2 / –

1" = 1'-0"

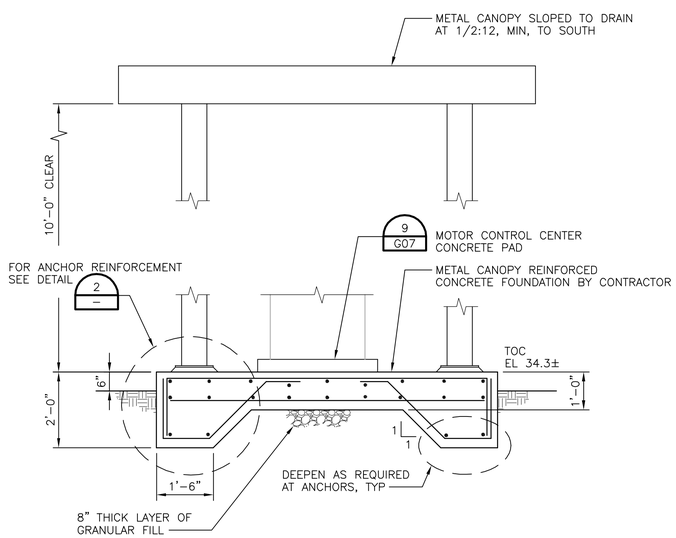

NOTE:
ALL INFORMATION IN THIS SECTION
IS MINIMUM REQUIREMENTS

SECTION

A / –

1/2" = 1'-0"

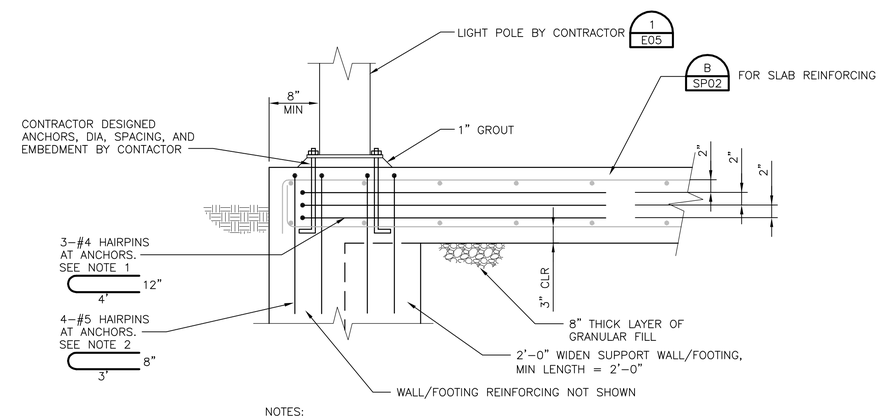

NOTES:

1. CONTRACTOR TO VERIFY WITH ANCHOR LOCATION.
2. WIDEN FOOTING @ ANCHORS AND VERTICAL HAIRPINS TO ACCOMMODATE HAIRPINS.

DETAIL AT LIGHT POLE ANCHORAGE

3 / SP01

1" = 1'-0"

HDR
HDR Engineering, Inc.

ISSUE	DATE	DESCRIPTION
0	1/20/2011	ISSUED FOR BID

PROJECT MANAGER	CRAIG OLSON, PE
DESIGNED	R. NATOLI
CHECKED	C. OLSON
DRAWN	P. VAN MEURS
PROJECT NUMBER	9240-144993
DISTRICT PROJECT	7487

APPROVED

APPROVED

REGISTERED PROFESSIONAL ENGINEER
CRAIG A. OLSON
NO. 39819
EXP. 12-31-11
CIVIL
STATE OF CALIFORNIA
1/20/11

North Bay Water Reuse Program
Sonoma Valley Effluent Reservoir R5

Sonoma Valley County Sanitation District

STRUCTURAL/PROCESS

MOTOR CONTROL CENTER FOUNDATION PLAN, SECTION AND DETAILS

0 1" 2"

FILENAME	144993_SP04.dwg
SCALE	AS NOTED

SHEET **SP04**

1

X 20A 3P OR X 100AF 80AT 3P — LOW VOLTAGE CIRCUIT BREAKER (CB). RATINGS AND NO. OF POLES AS SHOWN. WHEN SPECIFIC TYPE IS REQUIRED, X INDICATES TYPE.

TYPES:
MCCB – MOLDED CASE
ICCB – INSULATED CASE
LVP – LOW VOLTAGE POWER
MCP – MOTOR CIRCUIT PROTECTOR (RATING PER CONNECTED LOAD)

CB — SEPARATELY MOUNTED CIRCUIT BREAKER, SEE ELECTRICAL ONE LINE DIAGRAM OR SCHEDULE FOR DESCRIPTION

GFP — GROUND FAULT PROTECTION

52 — MEDIUM VOLTAGE CIRCUIT BREAKER

FUSE, SIZE AND NUMBER OF FUSES AS NOTED

FUSED CUTOUT, CURRENT RATING, FUSE SIZE AND NUMBER OF POLES AS NOTED

FUSIBLE SWITCH, CURRENT RATING, FUSE SIZE AND QUANTITY AS NOTED

NON–FUSED SWITCH, CURRENT RATING AND NUMBER OF POLES AS NOTED

DISCONNECT OR DRAWOUT CONNECTION

A B & A B — MAGNETIC MOTOR STARTER AND SEPARATELY MOUNTED COMBINATION MAGNETIC MOTOR STARTER.

D & D — MOTOR CONTROLLER AND SEPARATELY MOUNTED MOTOR CONTROLLER WITH SHORT CIRCUIT PROTECTION AND DISCONNECT.

MOTOR STARTER AND CONTROLLER SUBSCRIPTS:

A – MAGNETIC STARTER NEMA SIZE

B – STARTER TYPE
NONE – FULL VOLTAGE NON–REVERSING (FVNR)
FVR – FULL VOLTAGE REVERSING
2S – TWO SPEED
RVAT – REDUCED VOLTAGE AUTO TRANSFORMER

C – CONTROL DIAGRAM OR CONTROLS SCHEDULE NUMBER (IF REQUIRED)

D – CONTROLLER TYPE
VFD – VARIABLE FREQUENCY DRIVE
SS – SOLID STATE

SEPARATELY MOUNTED COMBINATION MOTOR STARTER OR CONTROLLER, SEE ELECTRICAL ONE LINE DIAGRAM OR SCHEDULE FOR DESCRIPTION

THERMAL OVERLOAD ELEMENT

OL — THERMAL OVERLOAD RELAY CONTACT

DISCONNECT OR SAFETY SWITCH, 30A, 3P, NON–FUSED UNLESS OTHERWISE NOTED

7.5 OR HP — MOTOR WITH DESIGN HORSEPOWER (WHEN INDICATED)

G — GENERATOR

ATS — TRANSFER SWITCH, CURRENT RATING AND NUMBER OF POLES AS NOTED.

ATS – AUTOMATIC
MTS – MANUAL

TRANSFORMER

Δ 3 PHASE, 3 WIRE DELTA CONNECTION

Y 3 PHASE, 4 WIRE GROUNDED WYE CONNECTION

LP100 208/120V 3ø, 4W — SWITCHBOARD OR PANELBOARD. NAME, VOLTAGE, PHASE, NUMBER OF WIRES WHEN INDICATED.

2

100 KVA — NON–MOTOR LOAD WITH DESIGN KVA, KW OR AMPS

CPT — CONTROL POWER TRANSFORMER (CPT)

VOLTAGE TRANSFORMER (VT OR PT)

CURRENT TRANSFORMER (CT)

WH — UTILITY WATT–HOUR METER PER UTILITY REQUIREMENTS

DMP — DIGITAL METERING PACKAGE

RTM — RUN TIME METER

GROUND

LIGHTNING ARRESTER

SPD — LOW VOLTAGE SURGE PROTECTIVE DEVICE

ELECTRICAL CONNECTION

OR OR — NO ELECTRICAL CONNECTION

SV OR — SOLENOID VALVE

X Y — CONTROL/RELAY COIL, X INDICATES TYPE, Y INDICATES LOOP NO. WHEN USED

TYPES:
CR – CONTROL RELAY
DP – DEFINITE PURPOSE RELAY
LC – LIGHTING CONTACTOR
M – MOTOR STARTER
PC – PHOTO CELL
TC – TIME CLOCK
TR – TIMING RELAY

NORMALLY OPEN CONTACT (N.O.)

NORMALLY CLOSED CONTACT (N.C.)

NORMALLY OPEN TIME DELAY RELAY CONTACT, WITH TIME DELAY ON CLOSING AFTER COIL IS ENERGIZED

NORMALLY CLOSED TIME DELAY RELAY CONTACT, WITH TIME DELAY ON OPENING AFTER COIL IS ENERGIZED

NORMALLY OPEN TIME DELAY RELAY CONTACT, WITH TIME DELAY ON OPENING AFTER COIL IS DE–ENERGIZED

NORMALLY CLOSED TIME DELAY RELAY CONTACT, WITH TIME DELAY ON CLOSING AFTER COIL IS DE–ENERGIZED

NORMALLY OPEN TEMPERATURE SWITCH, CLOSE ON RISING TEMPERATURE

NORMALLY CLOSED TEMPERATURE SWITCH, OPEN ON RISING TEMPERATURE

NORMALLY OPEN FLOW SWITCH, CLOSE ON INCREASING FLOW

NORMALLY CLOSED FLOW SWITCH, OPEN ON INCREASING FLOW

3

NORMALLY OPEN LEVEL SWITCH, CLOSE ON RISING LEVEL

NORMALLY CLOSED LEVEL SWITCH, OPEN ON RISING LEVEL

NORMALLY OPEN PRESSURE SWITCH, CLOSE ON INCREASING PRESSURE

NORMALLY CLOSED PRESSURE SWITCH, OPEN ON INCREASING PRESSURE

NORMALLY OPEN LIMIT SWITCH, CLOSE ON REACHING LIMIT

NORMALLY CLOSED LIMIT SWITCH, OPEN ON REACHING LIMIT

FIELD WIRING EXTERNAL TO CONTROL PANEL

X — INTERLOCK, X INDICATES TYPE

TYPES:
E – ELECTRICAL
M – MECHANICAL
K – KEY

OFF HAND AUTO XOO OOX — 3 POSITION SELECTOR SWITCH, MAINTAINED CONTACTS, UNLESS OTHERWISE NOTED, 2 POSITION SIMILAR

NORMALLY OPEN PUSHBUTTON, MOMENTARY CONTACT UNLESS OTHERWISE NOTED

NORMALLY CLOSED PUSHBUTTON, MOMENTARY CONTACT UNLESS OTHERWISE NOTED

X — INDICATING LIGHT, X INDICATES LENS COLOR

X — PUSH TO TEST INDICATING LIGHT, X INDICATES LENS COLOR

LENS COLORS:
R – RED
G – GREEN
B – BLUE
Y – YELLOW
W – WHITE
A – AMBER

T — TRANSFORMER

SS — SELECTOR SWITCH

PB — PUSHBUTTON

IC — INSTRUMENTATION/CONTROL DEVICE

CONTROL PANEL INTEGRAL OR PROVIDED WITH ASSOCIATED EQUIPMENT

CONTROL PANEL WITH DISCONNECT SWITCH INTEGRAL OR PROVIDED WITH ASSOCIATED EQUIPMENT

J — JUNCTION OR PULL BOX

PANELBOARD (250V TO 600V)

PANELBOARD (LESS THAN 250V)

ELECTRICAL EQUIPMENT ENCLOSURE: SWITCHBOARD, MOTOR CONTROL CENTER, CONTROL PANEL OR OTHER EQUIPMENT AS INDICATED

PC — PHOTOCELL

Z X Y — CEILING/PENDANT MOUNTED LUMINAIRE – HID, COMPACT FLUORESCENT OR INCANDESCENT

Z X Y — WALL MOUNTED LUMINAIRE – HID, COMPACT FLUORESCENT OR INCANDESCENT

Z X Y — CEILING/PENDANT MOUNTED FLUORESCENT FIXTURE

Z X Y — WALL MOUNTED FLUORESCENT FIXTURE

Z X Y — CEILING/PENDANT MOUNTED FLUORESCENT FIXTURE NORMAL/EMERGENCY

Z X Y — WALL MOUNTED FLUORESCENT FIXTURE NORMAL/EMERGENCY

X Y — EMERGENCY LIGHT FIXTURE, 2 ATTACHED HEADS AS SHOWN

X Y — EMERGENCY LIGHT, REMOTE MOUNTED HEAD

4

X Y — DOUBLE FACED CEILING OR WALL MOUNTED EXIT LIGHT, DIRECTIONAL ARROWS (IF REQUIRED) AS INDICATED ON PLANS

X Y — SINGLE FACED CEILING OR WALL MOUNTED EXIT LIGHT, DIRECTIONAL ARROWS (IF REQUIRED) AS INDICATED ON PLANS

X Y — AREA OR ROADWAY LIGHT – POLE MOUNTED

LIGHTING FIXTURE SUBSCRIPTS:
X – INDICATES FIXTURE TYPE PER LIGHTING FIXTURE SCHEDULE
Y – INDICATES CIRCUIT NUMBER FROM PANELBOARD
z – INDICATES CONTROLLING SWITCH (IF REQUIRED)

Y X — TOGGLE SWITCH

SUBCRIPTS:
X – INDICATES TYPE
NONE NONE – SINGLE POLE
3 – THREE–WAY
4 – FOUR–WAY
HP – TOGGLE SWITCH, HORSEPOWER RATED
K – KEY SWITCH
TE – MANUAL MOTOR STARTER WITH THERMAL ELEMENT
P – PILOT LIGHT
L – LIGHTED HANDLE
Y – INDICATES CONTROLLING SWITCH (IF REQUIRED)

SPECIAL PURPOSE RECEPTACLE AS DEFINED ON PLANS

PLUG–IN RECEPTACLE STRIP, QUANTITY AND SPACING OF RECEPTACLES AS NOTED OR SPECIFIED

TELECOMMUNICATIONS OUTLET JUNCTION BOX

X Y — QUAD–DUPLEX RECEPTACLE, TWO NEMA 5–20R UNDER COMMON COVER PLATE.

X Y — DUPLEX RECEPTACLE, NEMA 5–20R

X Y — SIMPLEX RECEPTACLE, NEMA 5–20R

SUBSCRIPTS:
X – INDICATES TYPE
GFCI – GROUND FAULT CIRCUIT INTERRUPTER
Y – INDICATES CIRCUIT NUMBER FROM PANELBOARD

CONDUIT TURNING UP

CONDUIT TURNING DOWN

HOME RUN TO PANEL, 2 #12, 1 #12G IN 3/4"C UNLESS OTHERWISE NOTED

CIRCUIT RUN BETWEEN DEVICES EXPOSED IN NON–ARCHITECTURALLY FINISHED AREAS, CONCEALED IN ARCHITECTURALLY FINISHED AREAS. CONDUIT AND CONDUCTOR SIZES SHALL BE THE SAME AS THE HOMERUN FOR THE CIRCUIT

CONDUIT RUN BETWEEN DEVICES CONCEALED IN NON–ARCHITECTURALLY FINISHED AREAS OR UNDER FLOOR SLAB. CONDUIT AND CONDUCTOR SIZES SHALL BE THE SAME AS THE HOMERUN FOR THE CIRCUIT.

CIRCUIT HASH MARKS (WHEN INDICATED), LONG, SHORT, SINGLE DOT AND DOUBLE DOT REPRESENT PHASE, NEUTRAL, EQUIPMENT GROUND AND ISOLATED EQUIPMENT GROUND RESPECTIVELY. #12 IN 3/4" CONDUIT UNLESS OTHERWISE INDICATED

CIRCUIT CONTINUATION

CONDUIT STUBBED OUT AND CAPPED

CXXX — CONDUIT TAG OR CIRCUIT NUMBER – WIRE AND CONDUIT SIZE AS SPECIFIED IN CIRCUIT SCHEDULE ON THE DRAWINGS

FAA — FIRE ALARM ANNUNCIATOR

FACP — FIRE ALARM CONTROL PANEL

F — FIRE ALARM MANUAL PULL STATION

CR — FIRE ALARM CONTROL RELAY

FS — FIRE ALARM CONTACT, FLOW SWITCH

TS — FIRE ALARM CONTACT, TAMPER SWITCH

PS — FIRE ALARM CONTACT, PRESSURE SWITCH

X AND X — SMOKE AND DUCT DETECTOR

SUBCRIPT:
I – IONAZATION TYPE
P – PHOTOELECTRIC TYPE

X — HEAT DETECTOR

SUBCRIPT:
R/C – RATE COMPENSATION
R/F – COMBINATION RATE OF RISE AND FIXED TEMP
R – RATE OF RISE
F – FIXED

X — ALARM BELL

X — ALARM HORN

X — ALARM FLASHING LIGHT

X — ALARM BELL AND FLASHING LIGHT COMBINATION UNIT

X — ALARM HORN AND FLASHING LIGHT COMBINATION UNIT

SUBCRIPT:
NONE – GENERAL ALARM DEVICE
F – FIRE ALARM DEVICE

GROUND CABLE

GROUND ROD

EXTERIOR PADMOUNTED TRANSFORMER

POLE MOUNTED TRANSFORMER

Y — ELECTRICAL HANDHOLE OR MANHOLE
Y – MHX OR HHX WHERE X INDICATES SEQUENCE NUMBER

E — UNDREGROUND ELECTRICAL DUCT BANK (CONCRETE ENCASED UNLESS OTHERWISE NOTED)

GENERAL NOTES:

1. THIS IS A STANDARD ELECTRICAL SYMBOLS SHEET. ALL SYMBOLS MAY NOT BE USED ON THIS PROJECT.
2. IN GENERAL CONDUIT ROUTING IS NOT SHOWN ON THE PLANS. THE CONTRACTOR SHALL BE RESPONSIBLE FOR ROUTING ALL CONDUITS INCLUDING THOSE SHOWN ON ONE–LINES AND HOME RUNS. SEE SPECIFICATIONS FOR CONDUIT INSTALLATION REQUIREMENTS. CONDUIT ROUTINGS AND STUB–UP LOCATIONS THAT ARE SHOWN ARE APPROXIMATE, EXACT ROUTINGS SHALL BE AS REQUIRED FOR EQUIPMENT FURNISHED.
3. WHEN BRANCH CIRCUITS ARE NOT SHOWN ON THE PLANS THE CONTRACTOR SHALL FURNISH AND INSTALL ALL CONDUITS AND CONDUCTORS REQUIRED. CONDUIT AND CONDUCTOR SIZES SHALL BE THE SAME AS THE HOMERUN FOR THE BRANCH CIRCUIT.
4. SCREENING OR SHADING OF WORK IS USED TO INDICATE EXISTING COMPONENTS OR TO DE–EMPHASIZE PROPOSED IMPROVEMENTS TO HIGHLIGHT SELECTED TRADE WORK. REFER TO CONTEXT OF EACH DRAWING FOR USAGE.

HDR
HDR Engineering, Inc.

ISSUE	DATE	DESCRIPTION
0	1/20/2011	ISSUED FOR BID

PROJECT MANAGER	CRAIG OLSON, PE
DESIGNED	R. NATOLI
CHECKED	C. OLSON
DRAWN	P. VAN MEURS
PROJECT NUMBER	9240–144993
DISTRICT PROJECT	7487

APPROVED

APPROVED

REGISTERED PROFESSIONAL ENGINEER WILLIAM F. ETLICH NO. 7625 EXP. 09/30/12 STATE OF CALIFORNIA 1-20-11

North Bay Water Reuse Program
Sonoma Valley Effluent Reservoir R5

Sonoma Valley County Sanitation District

ELECTRICAL

ELECTRICAL SYMBOLS AND LEGEND

0 1" 2"

FILENAME	144993_E01.dwg
SCALE	AS NOTED

SHEET **E01**

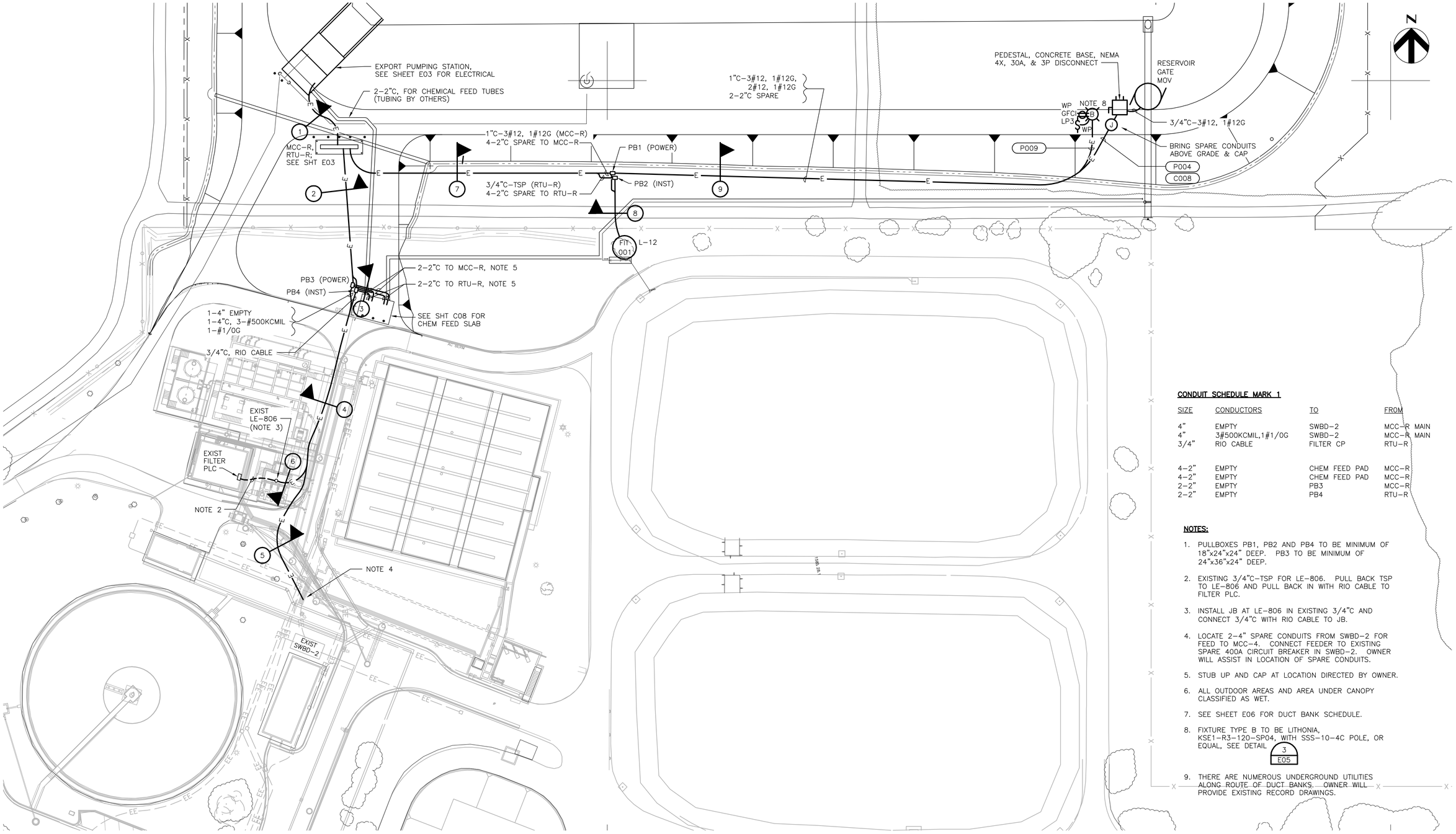

CONDUIT SCHEDULE MARK 1

SIZE	CONDUCTORS	TO	FROM
4"	EMPTY	SWBD-2	MCC-R MAIN
4"	3#500KCMIL,1#1/0G	SWBD-2	MCC-R MAIN
3/4"	RIO CABLE	FILTER CP	RTU-R
4-2"	EMPTY	CHEM FEED PAD	MCC-R
4-2"	EMPTY	CHEM FEED PAD	MCC-R
2-2"	EMPTY	PB3	MCC-R
2-2"	EMPTY	PB4	RTU-R

NOTES:

1. PULLBOXES PB1, PB2 AND PB4 TO BE MINIMUM OF 18"x24"x24" DEEP. PB3 TO BE MINIMUM OF 24"x36"x24" DEEP.
2. EXISTING 3/4"C-TSP FOR LE-806. PULL BACK TSP TO LE-806 AND PULL BACK IN WITH RIO CABLE TO FILTER PLC.
3. INSTALL JB AT LE-806 IN EXISTING 3/4"C AND CONNECT 3/4"C WITH RIO CABLE TO JB.
4. LOCATE 2-4" SPARE CONDUITS FROM SWBD-2 FOR FEED TO MCC-4. CONNECT FEEDER TO EXISTING SPARE 400A CIRCUIT BREAKER IN SWBD-2. OWNER WILL ASSIST IN LOCATION OF SPARE CONDUITS.
5. STUB UP AND CAP AT LOCATION DIRECTED BY OWNER.
6. ALL OUTDOOR AREAS AND AREA UNDER CANOPY CLASSIFIED AS WET.
7. SEE SHEET E06 FOR DUCT BANK SCHEDULE.
8. FIXTURE TYPE B TO BE LITHONIA, KSE1-R3-120-SP04, WITH SSS-10-4C POLE, OR EQUAL, SEE DETAIL 3/E05
9. THERE ARE NUMEROUS UNDERGROUND UTILITIES ALONG ROUTE OF DUCT BANKS. OWNER WILL PROVIDE EXISTING RECORD DRAWINGS.

HDR

HDR Engineering, Inc.

ISSUE	DATE	DESCRIPTION
0	1/20/2011	ISSUED FOR BID

PROJECT MANAGER	CRAIG OLSON, PE
DESIGNED	R. NATOLI
CHECKED	C. OLSON
DRAWN	P. VAN MEURS
PROJECT NUMBER	9240-144993
DISTRICT PROJECT	- 7487

APPROVED

APPROVED

REGISTERED PROFESSIONAL ENGINEER WILLIAM F. ETLICH NO. 7625 EXP. 09/30/12 STATE OF CALIFORNIA 1-20-11

North Bay Water Reuse Program
Sonoma Valley Effluent Reservoir R5

Sonoma Valley County Sanitation District

ELECTRICAL

ELECTRICAL SITE PLAN

0 1" 2"

FILENAME	144993_E02.dwg
SCALE	1" = 30'

SHEET **E02**

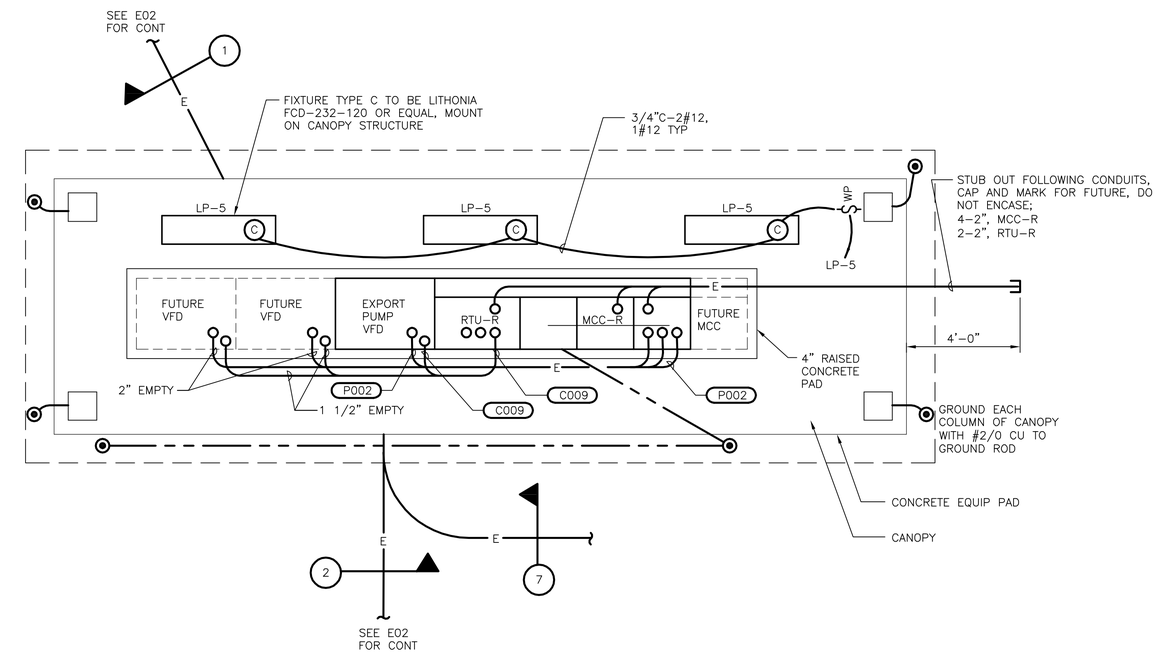

MCC-R/RTU-R DETAIL

3/8" = 1'-0"

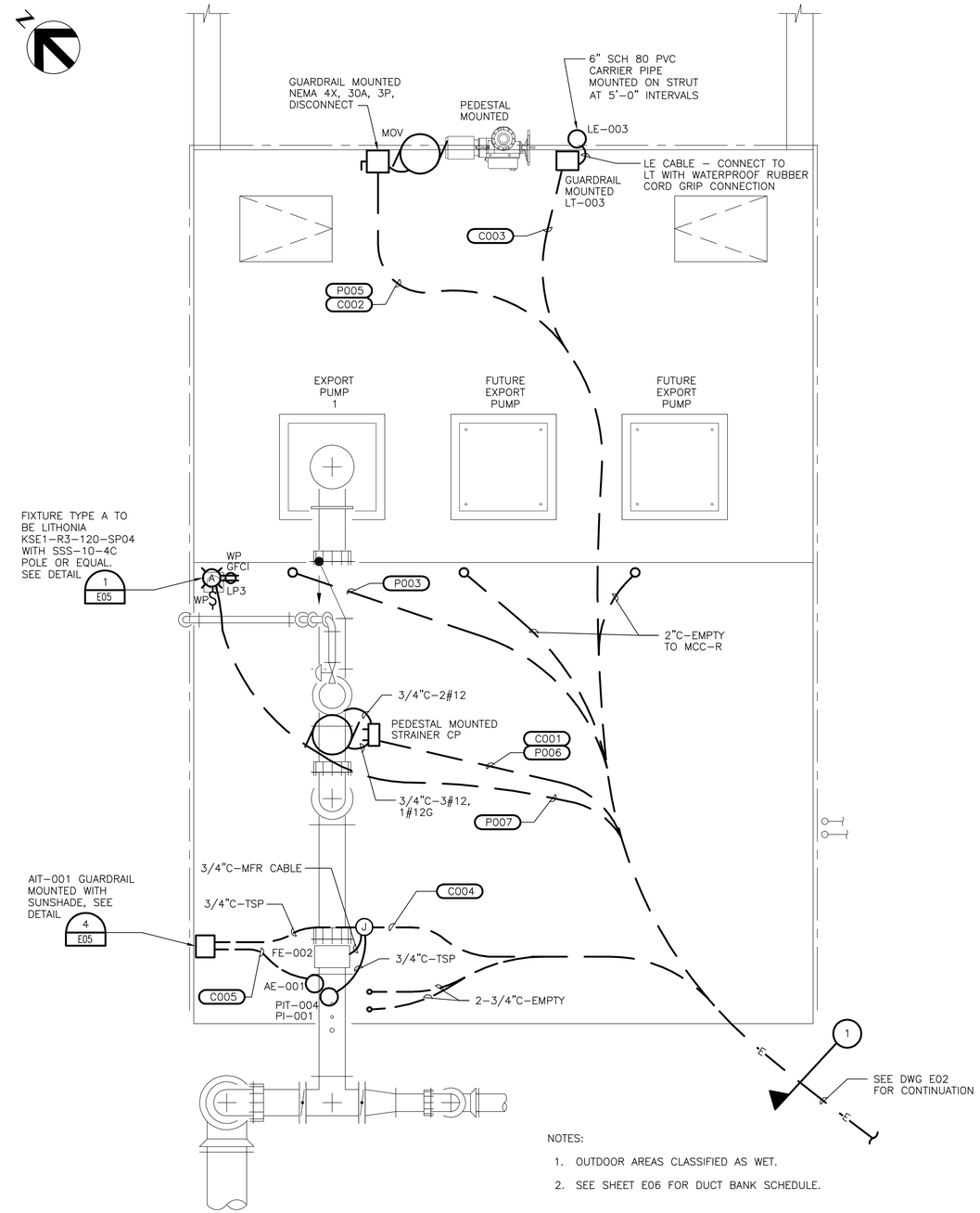

NOTES:

1. OUTDOOR AREAS CLASSIFIED AS WET.
2. SEE SHEET E06 FOR DUCT BANK SCHEDULE.

PUMPING STATION ELECTRICAL PLAN

3/8" = 1'-0"

HDR

HDR Engineering, Inc.

ISSUE	DATE	DESCRIPTION
0	1/20/2011	ISSUED FOR BID

PROJECT MANAGER	CRAIG OLSON, PE
DESIGNED	R. NATOLI
CHECKED	C. OLSON
DRAWN	P. VAN MEURS
PROJECT NUMBER	9240-144993
DISTRICT PROJECT	7487

APPROVED

APPROVED

REGISTERED PROFESSIONAL ENGINEER WILLIAM F. ETLICH NO. 7625 EXP. 09/30/12 STATE OF CALIFORNIA

1-20-11

North Bay Water Reuse Program

Sonoma Valley Effluent Reservoir R5

Sonoma Valley County Sanitation District

ELECTRICAL

EXPORT PUMPING STATION AND MCC-R ELECTRICAL PLANS

0 1" 2"

FILENAME	144993_E03.dwg
SCALE	AS NOTED

SHEET **E03**

PANEL: LP	FEEDER ENTRANCE: BOTTOM	MOUNTING: MCC–R
SERVICE: 120/208V, 3ø, 4W, 100A		SERVICE ENTRANCE LABEL: NO
MAIN DEVICE: 100A MAIN BREAKER		

CKT NO.	CIRCUIT IDENTIFICATION	CB AMPS	VA PER PHASE A	VA PER PHASE B	VA PER PHASE C	CB AMPS	CIRCUIT IDENTIFICATION	CKT NO.
1	OUTLETS	20/1	500 / 200			20/1	RTU–R	2
3	OUTLETS	20/1		. / 500		20/1	RTU–R	4
5	LIGHTS	20/1			600 / 200	20/3	STRAINER	6
7	AIT–001	20/1	100 / 200					8
9	SPARE	20/1		. / 200				10
11	SPACE	.			. / 200	.	FIT–001	12
13	"	.	. / 200			.	SPACE	14
15	"	.		. / 200		.	"	16
17	"	.			. / .	.	"	18
19	"	.	. / .			.	"	20
21	"			. / .		.	"	22
23					. / .	.	"	24
25	"		. / .			.	"	26
27				. / .				28
29	"				. / .			30
EST TOTAL VA PER PHASE			1200	900	1000			
EST TOTAL PANELBOARD VA					3100			

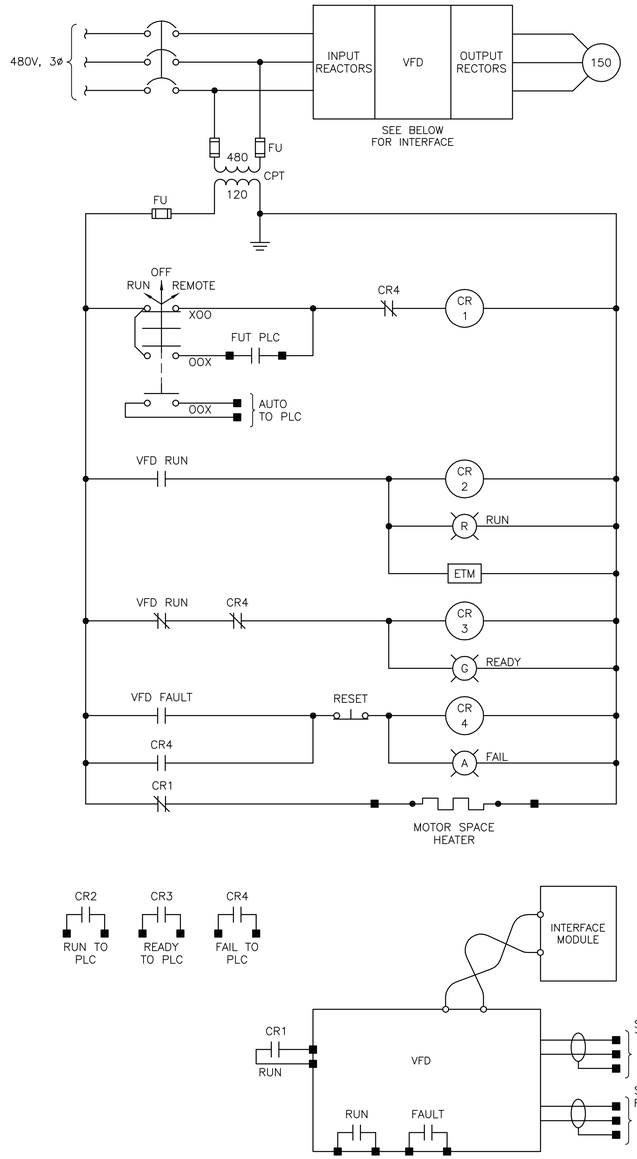

CD–1: RECIRCULATION PUMP

NO SCALE

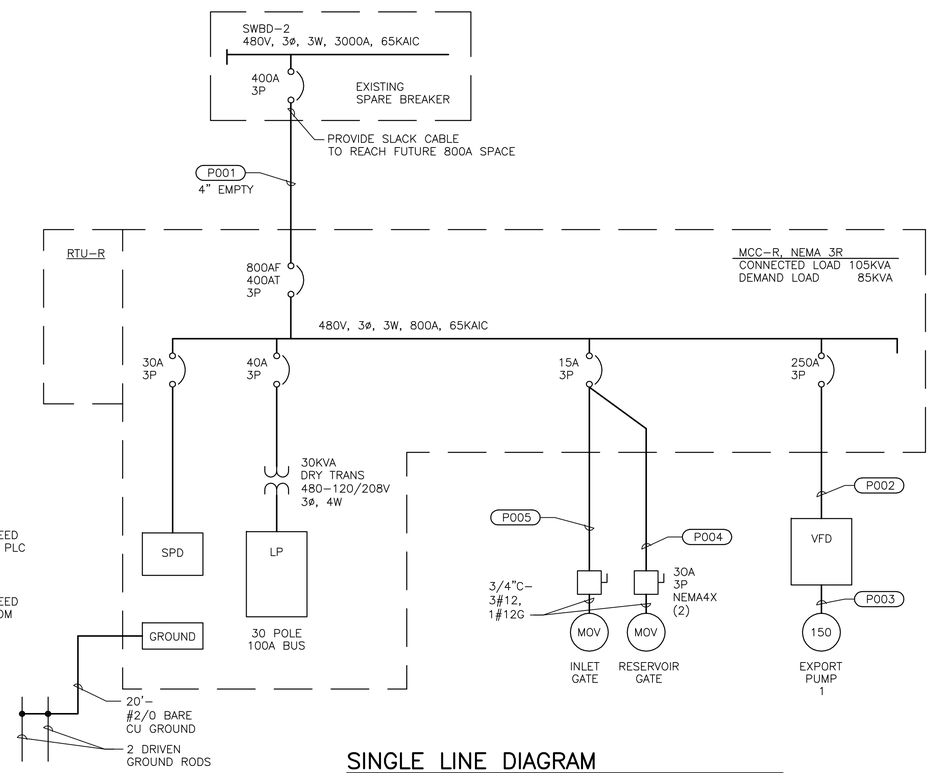

SINGLE LINE DIAGRAM

NOT TO SCALE

HDR

HDR Engineering, Inc.

ISSUE	DATE	DESCRIPTION
0	1/20/2011	ISSUED FOR BID

PROJECT MANAGER	CRAIG OLSON, PE
DESIGNED	R. NATOLI
CHECKED	C. OLSON
DRAWN	P. VAN MEURS
PROJECT NUMBER	9240–144993
DISTRICT PROJECT	7487

APPROVED

APPROVED

REGISTERED PROFESSIONAL ENGINEER CRAIG A. OLSON NO. 39819 EXP. 12-31-11 CIVIL STATE OF CALIFORNIA

1/20/11

North Bay Water Reuse Program
Sonoma Valley Effluent Reservoir R5

Sonoma Valley County Sanitation District

ELECTRICAL

SINGLE LINE DIAGRAM, CONTROL DIAGRAMS AND SCHEDULES

0 1" 2"

FILENAME	144993_E04.dwg
SCALE	AS NOTED

SHEET **E04**

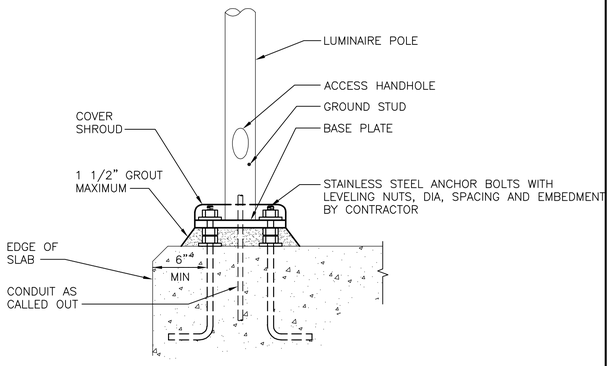

SLAB MOUNTED LIGHT POLE BASE

NOT TO SCALE

1 / E03

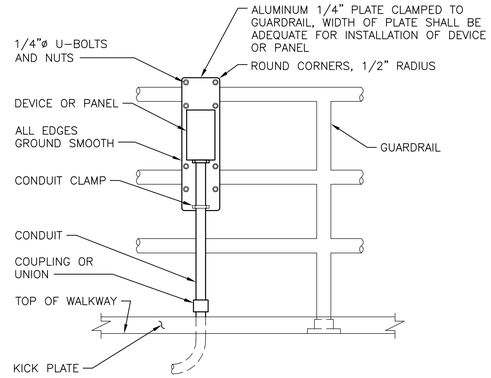

GUARDRAIL MOUNTED DEVICE

NTS

16010U008

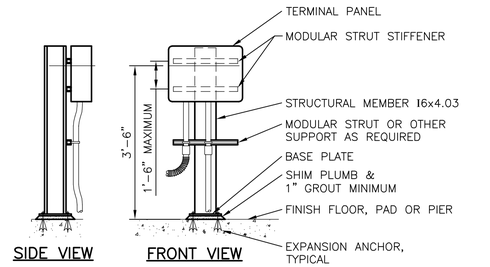

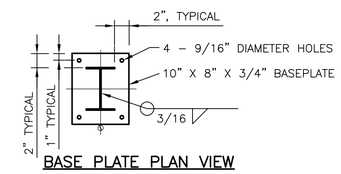

BASE PLATE PLAN VIEW

NOTES:

1. EQUIPMENT LOAD SHALL NOT EXCEED 200 LBS.
2. PEDESTAL ASSEMBLY MATERIAL: ALUMINUM, PER SPECIFICATION 05505.
3. ANCHORS: STAINLESS STEEL, 1/2" DIAMETER, 3 1/2" EMBEDMENT, PER SPECIFICATION 05505.
4. PROTECT SURFACES WITH DISSIMILAR MATERIALS IN ACCORDANCE WITH SPECIFICATION 09905.
5. ATTACH EACH MODULAR STRUT AND STIFFENER TO STRUCTURAL MEMBER WITH A MINIMUM OF TWO 3/8 INCH DIAMETER STAINLESS STEEL ROUND HEAD MACHINE SCREWS WITH LOCK WASHER AND NUT.
6. ATTACH PLATE TO EACH STIFFENER WITH A MINIMUM OF THREE 3/8 INCH DIAMETER STAINLESS STEEL FLAT HEAD (COUNTER SUNK) MACHINE SCREWS USING CHANNEL NUTS WITH SPRINGS.

EQUIPMENT PEDESTAL FED FROM BELOW

NOT TO SCALE

2 / E03

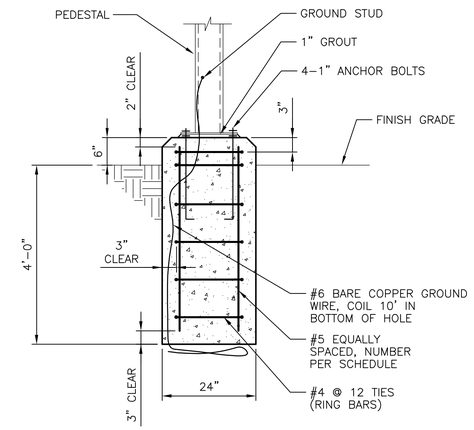

PEDESTAL FOUNDATION

NOT TO SCALE

16500–01

3 / E02

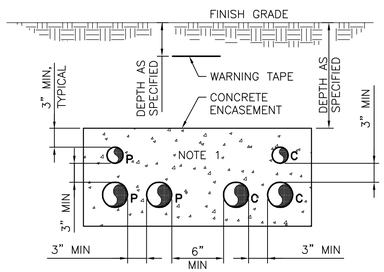

NOTES:

1. NUMBER OF CONDUITS AS REQUIRED FOR THE APPLICATION.
2.

CONCRETE ENCASED DUCT BANK SECTION

16135–02

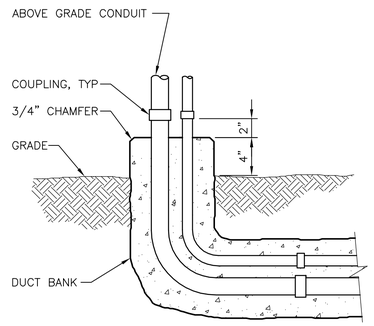

NOTE:

1. SEE DUCT BANK SECTION DETAIL FOR ADDITIONAL REQUIREMENTS.

CONDUIT TRANSITION TO ABOVE GRADE (EXTERIOR)

16135–04

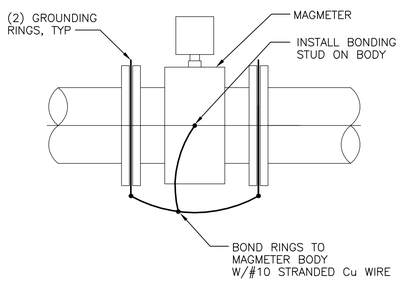

MAGNETIC FLOW METER INSTALLATION

NTS

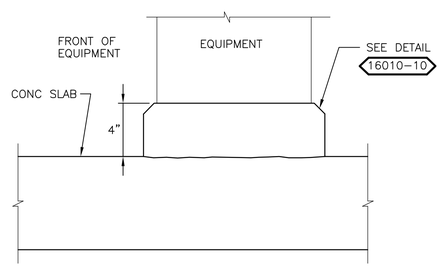

ELECTRICAL EQUIPMENT PAD

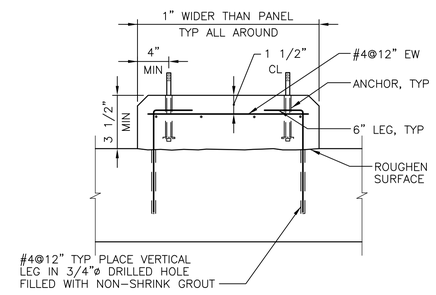

NOTES:

1. PROVIDE ABOVE PAD UNDER EQUIPMENT SUPPORTED ON STRUCTURAL OR ELEVATED SLABS. ALSO PROVIDE FOR ELECTRICAL & MECHANICAL EQUIPMENT WEIGHING LESS THAN 5000 LBS.

ELECTRICAL PAD

16010–10

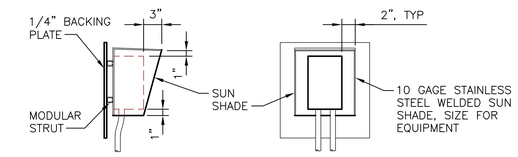

SUN SHADE

NTS

4 / E03

HDR

HDR Engineering, Inc.

ISSUE	DATE	DESCRIPTION
0	1/20/2011	ISSUED FOR BID

PROJECT MANAGER	CRAIG OLSON, PE
DESIGNED	R. NATOLI
CHECKED	C. OLSON
DRAWN	P. VAN MEURS
PROJECT NUMBER	9240–144993
DISTRICT PROJECT	7487

APPROVED

APPROVED

REGISTERED PROFESSIONAL ENGINEER CRAIG A. OLSON NO. 39819 EXP. 12-31-11 CIVIL STATE OF CALIFORNIA

1/20/11

North Bay Water Reuse Program
Sonoma Valley Effluent Reservoir R5

Sonoma Valley County Sanitation District

ELECTRICAL

ELECTRICAL DETAILS

0 1" 2"

FILENAME	144993_E05.dwg
SCALE	AS NOTED

SHEET **E05**

UNDERGROUND DUCT BANK WIRING SCHEDULE

MARK	FROM	TO	FILL
P001	SWBD-2	MCC-R	3-500 KCMIL, 1-1/0G
P002	MCC-R	EXPORT PUMP VFD	3#4/0, 1#8G
P003	EXPORT PUMP VFD	PUMP	3#4/0, 1#8G, 2#12
P004	MCC-R	RESERVOIR MOV	3#12, 1#12G
P005	MCC-R	INLET MOV	3#12, 1#12G
P006	PANELBOARD LP	STRAINER CP	3#12, 1#12G
P007	PANELBOARD LP	SITELIGHT	3#12, 1#12G
P008	PANELBOARD LP	FIT-001	2#12, 1#12G
P009	PANELBOARD LP	SITELIGHT	2#12, 1#12G
C001	STRAINER CP	RTU-R	4#16
C002	INLET MOV	RTU-R	4#16
C003	LE-003	RTU-R	TSP
C004	FE-002, AIT-001, PIT-004	RTU-R	2-TSP, MFR CABLE
C005	AE-001	AIT-001	MFR CABLE
C006	EXIST FILTER PLC	RTU-R	RI/O CABLE
C007	FIT-001	RTU-R	TSP
C008	RESERVOIR MOV	RTU-R	4#16
C009	EXPORT PUMP VFD	RTU-R	2-TSP, 6#16, 2#12

DUCT BANK CONDUIT SCHEDULE

DUCT BANK SECTION	POWER SIZE	POWER WIRING	CONTROL SIZE	CONTROL WIRING	COMMENTS
1	2"	P003	3/4"	C001	
	3/4"	P005	3/4"	C002	
	3/4"	P006	3/4"	C003	
	3/4"	P007	3/4"	C004	
	2"	EMPTY, FUTURE PUMP (MCC-R)	3/4"	EMPTY (RTU-R)	
	2"	EMPTY, FUTURE PUMP (MCC-R)	3/4"	EMPTY (RTU-R)	
2	4"	P001	3/4"	C006	
	4"	EMPTY (MCC-R)	2"	EMPTY (RTU-R)	
	2"	EMPTY (LP)	2"	EMPTY (RTU-R)	
	2"	EMPTY (LP)			
3	2"	EMPTY (LP)	2"	EMPTY (RTU-R)	
	2"	EMPTY (LP)	2"	EMPTY (RTU-R)	
4	4"	P001			
	4"	EMPTY (MCC-R)	3/4"	C006	
5	4"	P001			
	4"	EMPTY (MCC-R)			
6			3/4"	C006	
7	3/4"	P004	3/4"	C007	
	3/4"	P008	3/4"	C008	
	3/4"	P009			
	2"	EMPTY (MCC-R)	1"	1" EMPTY (RTU-R)	
	2"	EMPTY (LP)	1"	1" EMPTY (RTU-R)	
8	3/4"	P008	3/4"	C007	
9	3/4"	P004	3/4"	C008	
	3/4"	P009			

HDR Engineering, Inc.

ISSUE	DATE	DESCRIPTION
0	1/20/2011	ISSUED FOR BID

PROJECT MANAGER	CRAIG OLSON, PE
DESIGNED	R. NATOLI
CHECKED	C. OLSON
DRAWN	P. VAN MEURS
PROJECT NUMBER	9240-144993
DISTRICT PROJECT	7487

APPROVED

APPROVED

REGISTERED PROFESSIONAL ENGINEER CRAIG A. OLSON NO. 39819 EXP. 12-31-11 CIVIL STATE OF CALIFORNIA

1/20/11

North Bay Water Reuse Program
Sonoma Valley Effluent Reservoir R5

Sonoma Valley County Sanitation District

ELECTRICAL

DUCT BANK WIRING AND CONDUIT SCHEDULES

0 1" 2"

FILENAME	144993_E06.dwg
SCALE	AS NOTED

SHEET **E06**