DOCUMENT 00001

PROJECT MANUAL

for

SONOMA TANKS FENCE REPLACEMENT

SONOMA COUNTY WATER AGENCY

Grant Davis
General Manager

Advertisement Date: August 9, 2012

Bid Date: Wednesday, September 5, 2012

Contract Number: 60-67-7 #2

© 2012 Sonoma County Water Agency

DOCUMENT 00007

SEALS PAGE

SONOMA COUNTY WATER AGENCY

REGISTERED PROFESSIONAL ENGINEER
JAMES ALAN FLUGUM
No. 42900
CIVIL
STATE OF CALIFORNIA

James A. Flugum, P. E. Date: 7/26/12

rv

END OF DOCUMENT

DOCUMENT 00010

TABLE OF CONTENTS

ABBREVIATED EDITION

INTRODUCTORY INFORMATION

Document	Title
00001	Title Page
00007	Seals Page
00010	Table of Contents

BIDDING REQUIREMENTS

Document	Title
00100	Notice Inviting Informal Bids
00200	Instructions to Bidders
00202	Pre-Bid Site Visit Vicinity Map
00203	Bid Submittal Vicinity Map
00210	Indemnity and Release Agreement
00320	Geotechnical Data and Existing Conditions
00400	Bid Form
00411	Bond Accompanying Bid
00420	Bidder Registration Form
00430	Subcontractors List
00481	Non-collusion Declaration

CONTRACTING REQUIREMENTS

Document	Title
00510	Notice of Award
00520	Agreement
00550	Notice to Proceed
00611	Construction Performance Bond
00612	Construction Labor and Material Payment Bond
00630	Guaranty
00650	Agreement and Release of Any and All Claims
00660	Substitution Request Form

CONDITIONS OF THE CONTRACT

Document	Title
00700	General Conditions
	1. General
	2. Bidding
	3. Commencement of the Work
	4. Insurance
	5. Drawings and Specifications
	6. Construction by Owner or by Separate Contractors
	7. Owner's Representatives and Authorities
	8. Control of the Work
	9. Warranty, Guaranty, and Inspection of Work
	10. Contractor's Organization and Equipment
	11. Prosecution and Progress of the Work
	12. Claims by Contractor
	13. Legal and Miscellaneous
	14. Modifications of Contract Documents
	15. Time Allowances
	16. Working Conditions and Prevailing Wages
00800	Supplementary Conditions
00910	Addenda

SPECIFICATIONS

Division 1 - General Requirements

Section	Title
01100	Summary
	– Summary
	– Submittals
	– Work Covered by Contract Documents
	– Bid Items, Allowances, and Alternates
	– Work Under Other Contracts
	– Future Work
	– Work Sequence
	– Work Days and Hours
	– Shutdown For Discovery of Cultural Resources
	– Contractor Use of Site
	– Air Quality Standards
	– Construction Staking and Monument Protection
	– Protection of Existing Structures and Underground Facilities
	– Permits
	– Rights-of-Way
	– Document Tracking
	– Products Ordered In Advance
	– Owner-Furnished Products

Section	Title
01200	Price and Payment Procedures
01250	Modification Procedures
01315	Project Meetings
01330	Submittal Procedures
01410	Regulatory Requirements
01420	References and Definitions
01450	Quality Control
01500	Temporary Facilities and Controls
01540	Site Security and Safety
01770	Contract Closeout

Division 2 - Site Construction

Section	Title
02821	Chain Link Fence and Gate

Division 3 - Concrete

Section	Title
03300	Concrete and Grout

Division 4 – Division 16 (Not Used)

DRAWINGS

(See Index to Drawings on Drawing No. G-1)

END OF DOCUMENT

BIDDING REQUIREMENTS

DOCUMENT 00100

NOTICE INVITING INFORMAL BIDS

1. **NOTICE.** The Sonoma County Water Agency ("Owner"), a public agency a local district of the State of California, hereby gives notice that it will accept Bids for construction of the following public work:

Contract Number 60-67-7 #2
Sonoma County Water Agency

2. **DESCRIPTION AND LOCATION OF THE WORK.** The Work consists of the installation and replacement of security fencing around the Sonoma storage tanks at 1st Street West, near Spain Street, within the limits of the City of Sonoma. The Work includes, but is not limited to, the construction of approximately 1400′ of security fencing, and various types of gates. Bidding Documents contain the full description of the Work.

3. **ESTIMATED PROJECT COST RANGE:** $70,000 to $80,000.

4. **REQUIRED CONTRACTOR'S LICENSE(S).** A California "C-13" contractor's license is required to Bid this Contract. Joint ventures must secure a joint venture license prior to award of this Contract.

5. **CONTACT INFORMATION.**

Mailing address:
Sonoma County Water Agency
404 Aviation Blvd
Santa Rosa, CA 95403-9019

Office:
Sonoma County Water Agency
404 Aviation Boulevard
Santa Rosa, CA 95403-9019

Phone: 707-547-1900
Fax: 707-524-3782
Email: BidderQuestions@scwa.ca.gov

Website address:
www.sonomacountywater.org

6. **ELECTRONIC ACCESS TO BIDDING DOCUMENTS.** Bidders may view Bidding Documents on Owner's website: www.sonomacountywater.org. The only way to ensure receipt of Addenda is to register as a Planholder with Owner. Bidders can register on the website or at Owner's office.

7. **PROCUREMENT OF BIDDING DOCUMENTS.** Bidders may examine Bidding Documents at Owner's Office. Bidders may obtain hard copies of Bidding Documents upon registration as a Planholder through Owner's office and payment of a non-refundable fee of $20 for each copy. Owner will accept cash or checks payable to "Sonoma County Water Agency." Bidding Documents need not be returned to Owner. Bidding Documents contain a reduced set of Drawings. Bidders may arrange to obtain full-size Drawings from Draftech Blueprinting, Inc., 1544 Terrace Way, Santa Rosa, CA 95405, 707-578-9442 for an additional charge to be paid directly to Draftech Blueprinting, Inc.

8. **MANDATORY PRE-BID SITE VISIT.** Owner will conduct Pre-Bid Site Visit at 10:00 a.m. on Tuesday, August 21, 2012, at the Site (1st Street West, near Spain Street, within the limits of the City of Sonoma).

A map showing the meeting place for the Pre-Bid Site Visit(s) is available on Owner's website. Bidders must attend the Pre-Bid Site Visit and sign an attendance roster as a condition to bidding.

Bidders will be provided the opportunity to investigate conditions or otherwise conduct invasive investigations, explorations, tests, or studies at the Pre-Bid Site Visit, subject to delivering an executed Document 00210 (Indemnity and Release Agreement) and providing an insurance certificate as described therein by noon of the Day prior to the Pre-Bid Site Visit. This will be the Bidders' only opportunity to investigate conditions at the Site. Bidders who intend only to observe Site conditions and not conduct such examinations are not required to provide an executed Document 00210 (Indemnity and Release Agreement) or an insurance certificate for the Pre-Bid Site Visit. The Pre-Bid Site Visit is merely a showing of the Site and existing conditions and will not provide an opportunity for Bidders to have questions answered. Bidders are encouraged, however, to submit written questions. Owner will transmit to all Registered Planholders (all parties recorded as having received Bidding Documents) such Addenda as Owner in its discretion considers necessary in response to written questions. Bidding Documents will not be available at the Pre-Bid Site Visit.

Note
Attendance at the work showing does not guarantee receipt of Addenda. The only way to ensure receipt of Addenda is to register as a Planholder with Owner.

Bidders shall not rely on oral statements. Oral statements will not be binding or legally effective.

9. **INSTRUCTIONS.** Bidders shall refer to Document 00200 (Instructions to Bidders) for required documents and items to be submitted in sealed envelopes for deposit into the Bid box located at Owner's Office, and applicable times for submission.

10. **BID SUBMISSION.** Sealed Bids will be received at Owner's Office (see paragraph 5) until 11:00 a.m. Wednesday, September 5, 2012. Owner's staff will determine official time and will call out the designated time in the Bid reception area of Owner's Office, stating that the period for accepting Bids is closed. The Bid opening will be in accordance with procedures set forth in Document 00200 (Instructions to Bidders).

11. **BID PREPARATION COST.** Bidders are solely responsible for the cost of preparing their Bids.

12. **CONTRACT TIME.** Work shall be completed within 30 Days from the date when Contract Time commences to run.

13. **PAYMENT BONDS.** In accordance with California Civil Code Section 9550, payment bonds as set forth in Document 00200 (Instructions to Bidders) will be required from the successful Bidder.

14. **PREVAILING WAGE LAWS.** The successful Bidder must comply with all prevailing wage laws applicable to the Project, and related requirements contained in the Contract Documents.

15. **SUBSTITUTION OF SECURITIES. The successful Bidder shall have the rights and options** under Public Contract Code Section 22300 regarding disposition and handling of retention funds.

16. **RESERVATION OF RIGHTS.** Owner specifically reserves the right, in its sole discretion, to reject any or all Bids, or re-bid, or to waive inconsequential deviations from Bid requirements not involving time, price, or quality of the Work.

17. **INTERNATIONAL ORGANIZATION FOR STANDARDIZATION (ISO).** Owner is currently pursuing certification for ISO 9001 and 14001. Bidding Documents and Contract Documents contain information and requirements related to ISO.

By order of the Sonoma County Water Agency's General Manager.

END OF DOCUMENT

DOCUMENT 00200
INSTRUCTIONS TO BIDDERS
ABBREVIATED EDITION

Bids are requested for a general construction contract, or work described in general, as follows:

SONOMA COUNTY WATER AGENCY

1. **RECEIPT OF BIDS.** Sealed Bids will be received at Owner's Office (see paragraph 3 of this Document 00200 and Document 00203 [Bid Submittal Vicinity Map]) on Wednesday, September 5, 2012 **Bids shall be due by 11:00 a.m.** Owner will accept Bids only from Bidders duly licensed in accordance with the California Business & Professions Code. Owner will receive Bids in an opaque sealed 10" x 13" envelope, containing the respective items described in paragraph 6 of this Document 00200. All Bid envelopes will be time-stamped to reflect their submittal time. Owner's staff will determine official time and will call out the specified time in the Bid reception area of Owner's Office. Owner will reject all Bids received after the specified time and will return such Bids to Bidders unopened. Bidders must submit Bids in accordance with this Document 00200.

2. **BID OPENING.** Owner will open all Bidders' envelopes at 11:00 a.m. on the date specified in paragraph 1 above, initially evaluate them for responsiveness, and determine an Apparent Low Bidder as specified herein.

3. **CONTACT INFORMATION.**

Mailing address:
Sonoma County Water Agency
404 Aviation Boulevard
Santa Rosa, CA 95403-9019

Project Engineer
Jim Flugum, P. E.

Phone: 707-547-1900

Fax: 707-524-3782

Email: BidderQuestions@scwa.ca.gov

Office:
Sonoma County Water Agency
404 Aviation Boulevard
Santa Rosa, CA 95403

Website address:
www.sonomacountywater.org

MANDATORY PRE-BID SITE VISIT. Owner will conduct Pre-Bid Site Visit at 10:00 a.m. on Tuesday, August 21, 2012, at the Site (1st Street West, near Spain Street, within the limits of the City of Sonoma).

A map showing the meeting place for the Pre-Bid Site Visit(s) is included in Document 00202 (Pre-Bid Site Visit Vicinity Map.) Bidders must attend the Pre-Bid Site Visit and sign an attendance roster as a condition to bidding.

Bidders will be provided the opportunity to investigate conditions or otherwise conduct invasive investigations, explorations, tests, or studies at the Pre-Bid Site Visit, subject to delivering an executed Document 00210 (Indemnity and Release Agreement) and providing an insurance certificate as described therein by noon of the Day prior to the Pre-Bid Site Visit. This will be the Bidders' only opportunity to investigate conditions at the Site. Bidders who intend only to observe Site conditions and not conduct such examinations are not required to provide an executed Document 00210 (Indemnity and Release Agreement) or an insurance certificate for

the Pre-Bid Site Visit. The Pre-Bid Site Visit is merely a showing of the Site and existing conditions and will not provide an opportunity for Bidders to have questions answered. Bidders are encouraged, however, to submit written questions. Owner will transmit to all parties recorded as having received Bidding Documents such Addenda as Owner in its discretion considers necessary in response to written questions. Bidding Documents will not be available at the Pre-Bid Site Visit.

Bidders shall not rely on oral statements. Oral statements will not be binding or legally effective.

Other Pre-Bid Site Visits may be scheduled at Owner's sole discretion, depending on staff availability.

4. **BID SUBMISSION.** Bidder should mark its Bid envelope on the outside with Bidder's name and the following:

BID FOR THE SONOMA COUNTY WATER AGENCY,
CONTRACT NUMBER 60-67-7 #2,
SONOMA TANKS FENCE REPLACEMENT

Written clarifications made by Bidder in response to Owner's requests for clarifications during the Bid evaluation process become part of the Bid. Bids shall be deemed to include the written responses of the Bidder to any questions or requests for information of Owner made as part of Bid evaluation process after submission of Bid. Bidder's failure to submit all required documents strictly as required entitles Owner to reject the Bid as non-responsive. The submission of a Bid does not commit Owner to award a contract for the Project, to pay costs incurred in the preparation of a Bid, or to procure or contract for any goods or services.

5. **REQUIRED CONTENTS OF BIDS.** All Bidders must submit Bids containing the following fully executed documents supplied in this Project Manual, including without limitation:

A. Document 00400 (Bid Form) completed in accordance with the provisions of Document 00400.
B. Document 00411 (Bond Accompanying Bid). All Bidders choosing to submit a surety bond must submit it on the required form, Document 00411 (Bond Accompanying Bid). The surety bond shall be furnished by a surety authorized to do business in the State of California. As an alternative to a surety bond, Bidder may submit cash, a cashier's check, or certified check (certified without qualification and drawn on a solvent bank of the State of California or a National Bank doing business in the State of California). Bid security shall be not less than ten percent of the base Bid payable to the "Sonoma County Water Agency." Owner will reject as non-responsive any Bid submitted without the necessary Bid security. Owner may retain Bid security of other than the Apparent Low Bidder for a period of 60 Days after <u>issuance of the Notice of Award</u>. After award, Owner will return to the respective unsuccessful Bidders their Bid securities and Bid bonds.
C. Document 00420 (Bidder Registration Form) completed in accordance with the provisions of Document 00420.
D. Document 00430 (Subcontractors List) completed in accordance with the provisions of Document 00430.
E. Document 00481 (Noncollusion Declaration) completed in accordance with the provisions of Document 00481.

6. **OTHER REQUIREMENTS PRIOR TO BIDDING.** Submission of Bid signifies Bidder's careful examination of Bidding Documents and complete understanding of the nature, extent, and

location of Work to be performed. As a condition to Bidding, Bidder must complete tasks listed in Document 00520 (Agreement), Article 5. Submission of Bid shall constitute Bidder's express representation to Owner that Bidder has fully completed these tasks.

7. EXISTING CONDITIONS DRAWINGS AND DATA. Bidders may examine any available existing conditions information (e.g., record documents, specifications, studies, drawings of previous work) and applicable environmental assessment information (if any) regarding the Project by giving Owner reasonable advance notice. Owner will make copies available for a fee. A Bidder must give five Days advance notice if copies are desired.

8. BIDDER QUESTIONS AND ADDENDA. Bidders must direct all questions about the meaning or intent of Bidding Documents to Owner (Attention: Project Engineer) in writing at the address, fax number, or email indicated in Paragraph 3. Interpretations or clarifications considered necessary by Owner in response to such questions will be issued by Addenda mailed, faxed, emailed, or delivered to all parties recorded by Owner as having received Bidding Documents. Addenda will be written and will be issued to each Bidder to the address, fax number, or email supplied to Owner by Bidder. Owner may not answer questions received less than fourteen Days prior to the date for opening Bids. Only questions answered by formal written Addenda will be binding. Oral and other interpretations or clarifications will be without legal effect.

A. Addenda may also be issued to modify the Bidding Documents as deemed advisable by Owner.
B. Addenda shall be acknowledged by number with signature in Document 00400 (Bid Form) and shall be part of the Contract Documents. A complete listing of Addenda may be secured from Owner.
C. A complete listing of Addenda may be secured from Owner upon written request to the email, fax, or mailing address listed in Paragraph 3 (Contact Information) herein.

9. SUBSTITUTIONS. Bidders must base their Bids on products and systems specified in Contract Documents or listed by name in Addenda.

A. Except as provided in paragraph 10.D of this Document 00200, Owner will consider substitution requests only for "or equal items." Bidders wanting to use "or equal" item(s) may submit Document 00660 (Substitution Request Form) no later than 14 Days prior to submitting their Bids. After that date, Owner will not accept "or equal" substitution requests. To assess "or equal" acceptability of product or system, submittals of substitutions shall contain the information required in Document 00660 (Substitution Request Form). Insufficient information will be grounds for rejection of substitution. Owner shall, within a reasonable period of time after having received a Request for Substitution, issue in writing its decision as to whether the proposed substitute item is an Equal item. Owner's decision shall be conclusive on all Bidders.
B. Approved substitutions shall be listed in Addenda and become part of the Contract Documents.
C. Substitutions may be requested after submitting Bids and Award of Contract only in accordance with requirements specified in the Contract Documents.
D. As further limitation on Bidder's privilege to substitute items, Owner has found that:
   1. Certain items are designated as Owner standards and certain items are designated to match existing items in use on a particular public improvement, either completed or in the course of completion. As to such items, Owner will not permit substitution. Owner will not permit substitutions for the following items:

a. None.

2. Certain items are designated in order that a field test or experiment may be made to determine the product's suitability for future use. As to such items, Owner will not permit substitution. Owner will not permit substitutions for the following items:
   a. None.
3. Certain necessary items are only available from one source. As to such items, Owner will not permit substitution. Owner will not permit substitutions for the following items:
   a. None.

10. WAGE RATES. Copies of the general prevailing rates of per diem wages for each craft, classification, or type of worker needed to execute the Contract, as determined by Director of the State of California Department of Industrial Relations, are on file at Owner's Office and are deemed included in the Bidding Documents. Upon request, Owner will make available copies to any interested party. Copies are also available at www.dir.ca.gov/labor_law.html. Also, Contractor shall post the applicable prevailing wage rates at the Site.

11. WITHDRAWAL OF BIDS. Bidders may withdraw their Bids at any time prior to the Bid opening time fixed in this Document 00200, only by written request for the withdrawal of Bid filed with Owner. Bidder or its duly authorized representative shall execute request to withdraw Bid.

12. DETERMINATION OF APPARENT LOW BIDDER.

A. Apparent Low Bid will be based solely on the total amount of all Bid items based on assumptions contained in Document 00400 (Bid Form). All Bidders are required to submit Bids on all Bid items.
B. If any Apparent Low Bidder is determined to be non-responsive or non-responsible, Owner may proceed to the next Apparent Low Bidder's Bid pursuant to any procedures determined in its reasonable discretion, and proceed for all purposes as if this Apparent Low Bidder were the original Apparent Low Bidder.

13. BID EVALUATION. Owner may reject any or all Bids and waive any informalities or minor irregularities in the Bids. Owner also reserves the right, in its discretion, to reject any or all Bids and to re-Bid the Project. Owner reserves the right to reject any or all nonconforming, non-responsive, unbalanced, or conditional Bids, and to reject the Bid of any Bidder if Owner believes that it would not be in the best interest of Project to make an award to that Bidder, whether because the Bid is not responsive or the Bidder is unqualified or of doubtful financial ability or fails to meet any other pertinent standard or criteria established by Owner. For purposes of this paragraph, an "unbalanced Bid" is one having nominal prices for some Bid items and enhanced prices for other Bid items.

A. In evaluating Bids, Owner will consider Bidders' qualifications, whether or not the Bids comply with the prescribed requirements, unit prices, and other data, as may be requested in Document 00400 (Bid Form) or prior to the Notice of Award.
B. Owner may conduct reasonable investigations and reference checks of Bidder and other persons and organizations as Owner deems necessary to assist in the evaluation of any Bid and to establish Bidder's responsibility, commitment to project safety and ability to complete projects in a safe manner, qualifications, financial ability and ability to perform the Work in accordance with the Contract Documents to Owner's satisfaction within the prescribed time. Submission of a Bid constitutes Bidder's consent to the foregoing. Owner shall have the right to consider information provided by sources other than Bidder. Owner

shall also have the right to communicate directly with Bidder's surety regarding Bidder's bonds.

1. The following are minimum requirements for the Bidder to be found responsible to perform the Work:
   a. None.
2. Upon request from Owner, provide evidence of compliance with the requirements listed in paragraph 14.B.1 immediately above within one Business Day of request.

C. Discrepancies between the multiplication of units of Work and unit prices will be resolved in favor of the unit prices. Discrepancies between the indicated sum of any column of figures and the correct sum thereof will be resolved in favor of the correct sum. Discrepancies between written words and figures will be resolved in favor of the words.

14. BID PROTEST. Any Bid protest must be submitted in writing to Owner (Attention: Contract Administration/Inspection), before 3:30 p.m. of the fifth Business Day following opening of the Bidders' envelopes.

A. The initial protest document must contain a complete statement of the basis for the protest.
B. The protest must refer to the specific portion of the document that forms the basis for the protest.
C. The protest must include the name, address, and telephone number of the person representing the protesting party.
D. Only Bidders who Owner otherwise determines are responsive and responsible are eligible to protest a Bid; protests from any other Bidder will not be considered. In order to determine whether a protesting Bidder is responsive and responsible, Owner may evaluate all information contained in any protesting Bidder's Bid, and conduct the same investigation and evaluation as Owner is entitled to take regarding an Apparent Low Bidder.
E. The party filing the protest must concurrently transmit a copy of the initial protest document and any attached documentation to all other parties with a direct financial interest that may be adversely affected by the outcome of the protest. Such parties shall include all other Bidders who appear to have a reasonable prospect of receiving an award depending upon the outcome of the protest.
F. The procedure and time limits set forth in this paragraph are mandatory and are Bidder's sole and exclusive remedy in the event of Bid protest. Bidder's failure to comply with these procedures shall constitute a waiver of any right to further pursue the Bid protest, including filing a Government Code Claim or legal proceedings. A Bidder may not rely on a protest submitted by another Bidder but must timely pursue its own protest.

15. AWARD. If the Contract is to be awarded, it will be awarded to the lowest responsible responsive Bidder. Such Award, if made, will be made within 90 Days after day of Bid Opening.

16. POST-NOTICE OF AWARD REQUIREMENTS. Successful Bidder must execute and submit the following documents as indicated below.

A. Submit the following documents to Owner by 5:00 p.m. of the 20th Day following Notice of Award. Execution of Contract by Owner depends upon approval of these documents:
   1. Document 00520 (Agreement): To be executed by successful Bidder. Submit two originals, each bearing an original signature on the signature page and initials on each page.
   2. Document 00611 (Construction Performance Bond): To be executed by successful Bidder and surety, in the amount set forth in Document 00611 (Construction Performance

Bond). Submit two originals. Liquidated Damages are described in Document 00520 (Agreement).

3. Document 00612 (Construction Labor and Material Payment Bond): To be executed by successful Bidder and surety, in the amount set forth in Document 00612 (Construction Labor and Material Payment Bond). Submit two originals.
4. Insurance certificates and endorsements required by Article 4 of Document 00700 (General Conditions). Submit one original set.
5. The Guaranty in the form set forth in Document 00630 (Guaranty). Submit four originals, each bearing an original signature.

B. Owner shall have the right to communicate directly with Apparent Low Bidder's proposed performance bond surety, to confirm the performance bond. Owner may elect to extend the time to receive faithful performance and labor and material payment bonds.

C. Successful Bidder's failure to submit the documents required herein, in a proper and timely manner, entitles Owner to rescind its award and to cause Bidder's Bid security to be forfeited as provided herein.

17. **FAILURE TO EXECUTE AND DELIVER DOCUMENTS.** If Bidder to whom Contract is awarded, within the period described in paragraph 17 of this Document 00200, fails or neglects to execute and deliver all required Contract Documents and file all required bonds, insurance certificates, and other documents, Owner may, in its sole discretion, foreclose on Bidder's surety bond, or deposit Bidder's cashier's check or certified check for collection, and retain the proceeds thereof as liquidated damages for Bidder's failure to enter into the Contract Documents. Bidder agrees that calculating the damages Owner may suffer as a result of Bidder's failure to execute and deliver all required Contract Documents would be extremely difficult and impractical and that the amount of Bidder's required Bid security shall be the agreed and presumed amount of Owner's damages. In addition, upon such failure Owner may determine the next Apparent Low Bidder and proceed accordingly. Such Award, if made, will be made within 90 Days after opening of Bids.

18. **MODIFICATION OF COMMENCEMENT OF WORK.** Owner expressly reserves the right to modify the date for the Commencement of Work under the Contract and to independently perform and complete work related to the Project. Owner accepts no responsibility to Contractor for any delays attributed to its need to complete independent work at the Site.

19. **CONFORMED PROJECT MANUAL.** Following Award of Contract, Owner may prepare a conformed Project Manual reflecting Addenda issued during bidding, which will, failing objection, constitute the approved Project Manual.

20. **DEFINITIONS.** All abbreviations and definitions of terms used in this Document 00200 are set forth in Document 00700 (General Conditions) and Section 01420 (References and Definitions).

END OF DOCUMENT

DOCUMENT 00202

PRE-BID SITE VISIT VICINITY MAP

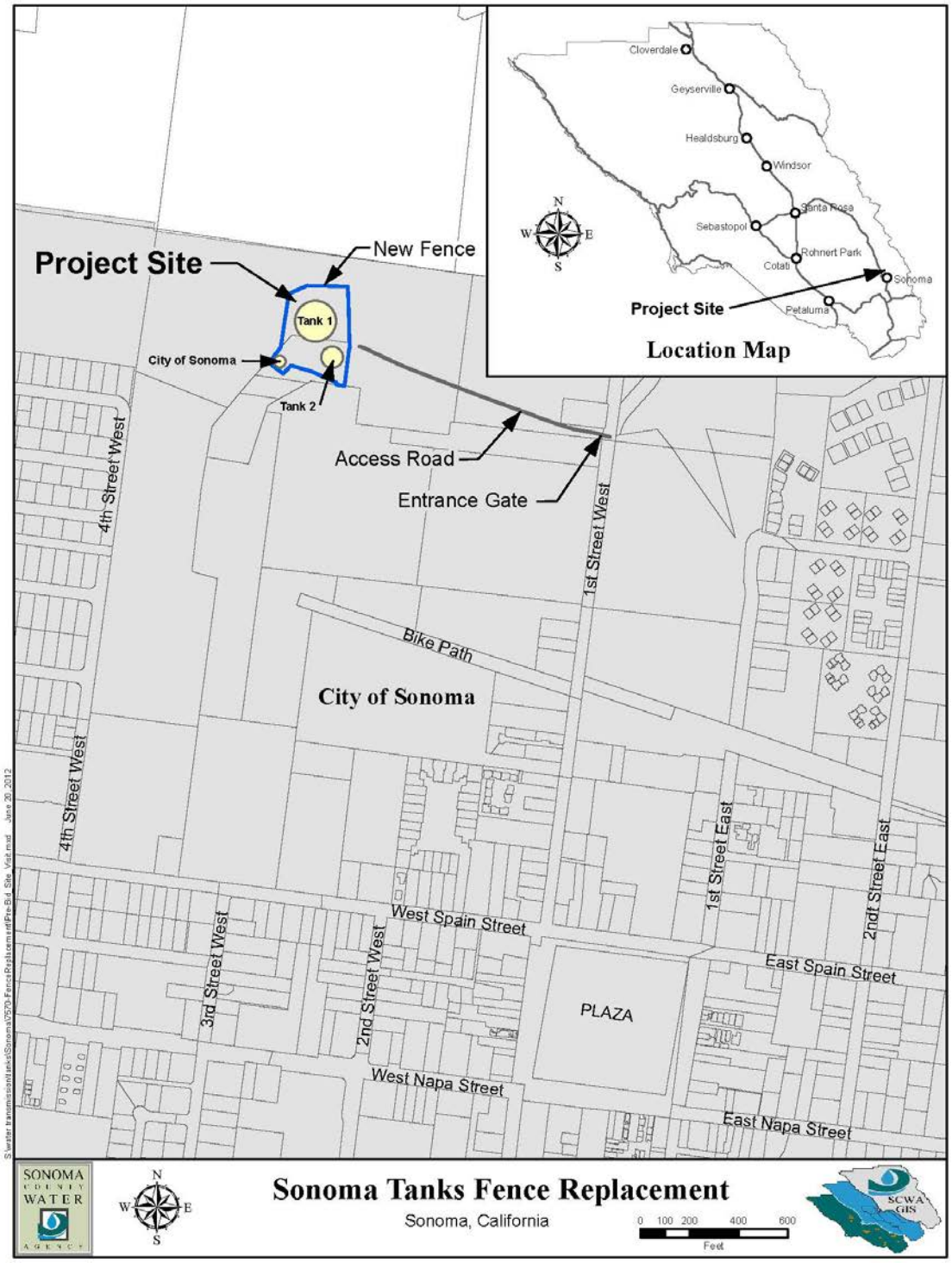

END OF DOCUMENT

DOCUMENT 00203

BID SUBMITTAL VICINITY MAP

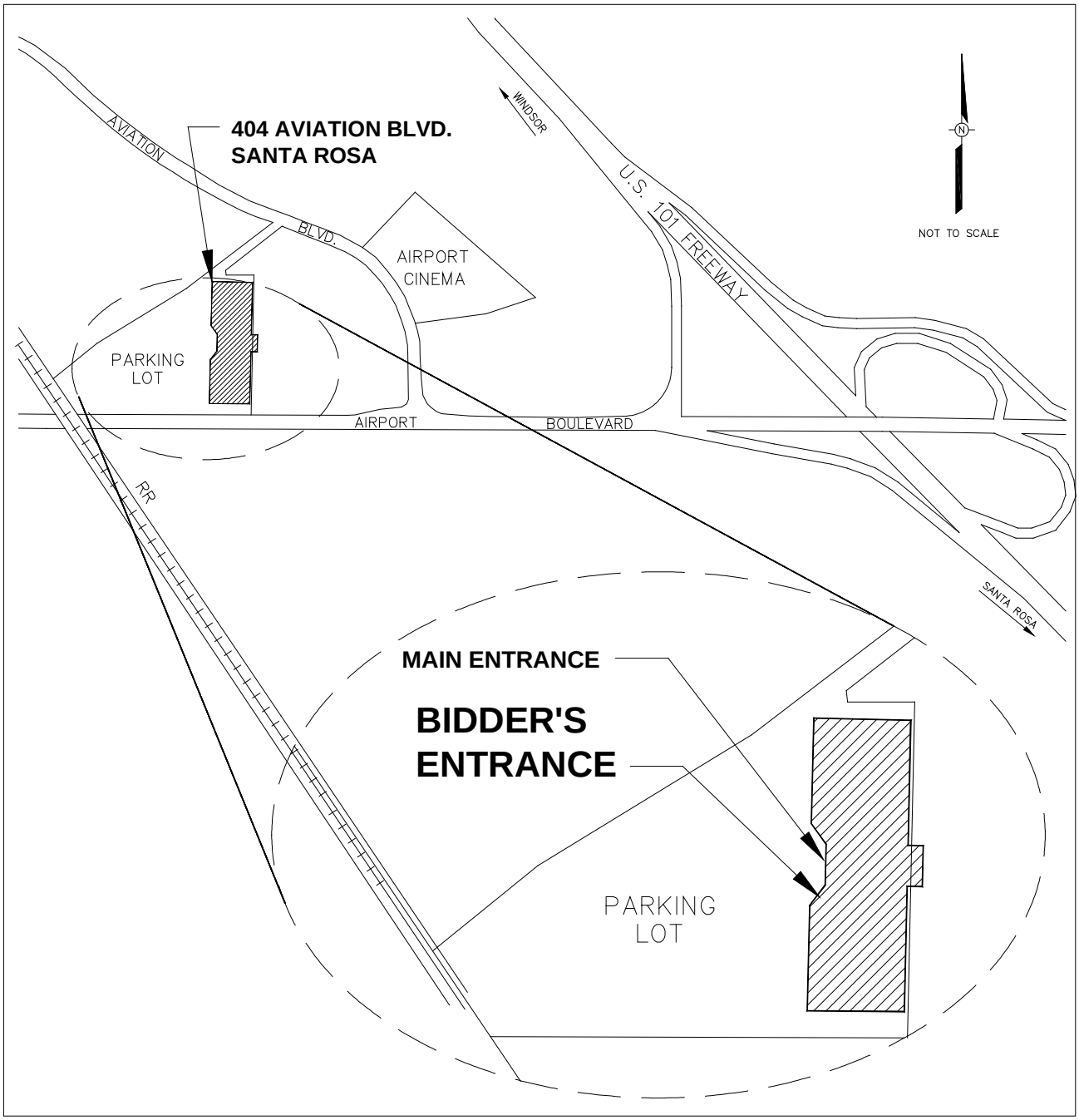

END OF DOCUMENT

DOCUMENT 00210

INDEMNITY AND RELEASE AGREEMENT

Dated _____

POTENTIAL BIDDER: _____

OWNER(S): SONOMA COUNTY WATER AGENCY, City of Sonoma, and Sonoma County Agricultural Preservation and Open Space District_____

SITE: 1st Street West, near Spain Street, within the limits of the City of Sonoma

PROJECT: SONOMA COUNTY WATER AGENCY

In consideration of the above-referenced Owner's permitting the undersigned potential bidder ("Bidder") to have access to, and to conduct investigations, tests and/or inspections on, the Site, Bidder hereby agrees as follows:

1. To the greatest extent permitted by law, Bidder hereby releases, and shall defend, indemnify and hold harmless Owner, and its officers, employees, consultants, representatives, and agents, and all other parties having any other interest in the Site, against any claim or liability, including attorney's fees, arising from or relating to any Site-related access, investigation, test, inspection and/or other activity conducted by Bidder or any of Bidder's officers, employees, consultants, representatives, and/or agents, regardless of whether claim or liability is caused in part by the negligence of Owner or by any released and indemnified party.

2. Bidder hereby waives the provisions of California Civil Code Section 1542 which provides as follows:

   > A general release does not extend to claims which the creditor does not know or suspect to exist in his favor at the time of executing the release, which if known by him, must have materially affected his settlement with the debtor.

3. Bidder shall repair any damage to the Site or adjacent property resulting from activities authorized hereunder, and return Site to its original condition as directed by Owner, and comply with and be subject to all other requirements and obligations described or referenced in Document 00320 (Geotechnical Data and Existing Conditions) and Document 00700 (General Conditions).

4. Attached hereto (or to be delivered separately before Bidder's visit to the Site) is a certificate for comprehensive general liability insurance satisfying the requirements of Document 00700 (General Conditions).

5. Although this Indemnity and Release Agreement is not a Contract Document (see Document 00520 [Agreement]), it shall be fully effective and binding regardless of

whether Bidder submits a Bid for the subject Project, is awarded a contract for the Project, or otherwise.

_____
Name of Bidder

By: _____
Signature

Its: _____
Title (If Corporation: Chairman, President or Vice President)

By: _____
Signature

Its: _____
Title (If Corporation: Secretary, Assistant Secretary, Chief Financial Officer or Assistant Treasurer)

END OF DOCUMENT

DOCUMENT 00320

GEOTECHNICAL DATA AND EXISTING CONDITIONS

1. SUMMARY

A. This Document 00320 sets forth the terms and conditions under which Bidder may review, study, use, or rely upon geotechnical data at or contiguous to the Site, and existing conditions information concerning existing conditions and Underground Facilities at or contiguous to the Site. This Document 00320, the available geotechnical data, and the supplied existing conditions information are not Contract Documents.

2. REPORT AND INFORMATION

A. Existence of Reports. Owner, its consultants, and prior contractors may have collected documents providing a general description of the Site and conditions of the Work. These documents may consist of geotechnical reports for and around the Site, contracts, contract specifications, tenant improvement contracts, as-built drawings, utility drawings, and information regarding Underground Facilities. These reports, documents and other information are not part of the Contract Documents.

B. Inspection of Reports. Bidders may inspect geotechnical reports, documents, and information regarding existing conditions available at the Owner's Office, and may obtain copies at cost of reproduction and handling upon Bidder's payment for the costs. These reports, documents, and other information are not part of the Contract Documents. Nevertheless, by submitting a Bid, Bidder accepts full responsibility for reviewing, knowing and understanding the contents of all of these materials.

C. Inclusion in Project Manual. Geotechnical reports may be included in the Project Manual and information regarding existing conditions may also be included in the Project Manual, but neither shall be considered part of the Contract Documents.

D. Available Documentation. The following documentation is available for review for Contract Number 60-67-7 #2 through Owner:

1. None.

3. USE OF INFORMATION ON EXISTING CONDITIONS

A. Aboveground Existing Conditions. Under no circumstances shall Owner be deemed to make a warranty or representation of existing aboveground conditions, as-built conditions, or other aboveground actual conditions verifiable by reasonable independent investigation. These conditions are verifiable by Bidder by the performance of its own independent investigation that Bidder must perform prior to bidding and Bidder must not rely on the information supplied by Owner regarding existing conditions. Bidder represents and agrees that in submitting its Bid, it is not relying on any information regarding existing conditions supplied by Owner.

B. Underground Facilities. Information supplied regarding existing Underground Facilities at or contiguous to the Site is based on information furnished to Owner by others (e.g., the owners or builders of such Underground Facilities or others). Except as expressly set forth in this Document 00320, Owner does not assume responsibility for the accuracy,

completeness or thoroughness of this information, and Bidder is solely responsible for any interpretation or conclusion drawn from this information. Except as expressly set forth in this Document 00320, Owner will be responsible only for the general accuracy of information regarding Underground Facilities, and only for those Underground Facilities that are owned by Owner. This express assumption of responsibility applies only if Bidder has conducted the independent investigation required of it and discrepancies were not apparent.

4. LIMITED RELIANCE PERMITTED ON CERTAIN GEOTECHNICAL INFORMATION

A. Geotechnical Data. Except as expressly set forth in this Document 00320, Owner does not warrant, and makes no representation regarding, the accuracy or thoroughness of any geotechnical data. Bidder represents and agrees that in submitting its Bid, it is not relying on any geotechnical data supplied by Owner, except as specifically set forth herein.

1. Bidder may rely upon the general accuracy of the "technical data" contained in the geotechnical reports and drawings identified above, but only insofar as it relates to subsurface conditions, provided Bidder has conducted the independent investigation required of it and discrepancies were not apparent. The term "technical data" in the referenced reports and drawings shall be limited as follows:
   a. The term "technical data" shall include actual reported depths, reported quantities, reported soil types, reported soil conditions, and reported material, equipment, or structures that were encountered during subsurface exploration.
   b. The term "technical data" does not include, and Bidder may not rely upon, any other data, interpretations, opinions or information shown or indicated in such drawings or reports that otherwise relate to subsurface conditions or described structures.
   c. The term "technical data" shall not include the location of Underground Facilities.
   d. Bidder may not rely on the completeness of reports and drawings for the purposes of bidding or construction. Bidder may rely upon the general accuracy of the "technical data" contained in such reports or drawings.
   e. Bidder is solely responsible for any interpretation or conclusion drawn from any "technical data" or any other data, interpretations, opinions, or information contained in supplied geotechnical data.

5. INVESTIGATIONS

A. Before submitting a Bid, each Bidder shall be responsible to obtain such additional or supplementary examinations, investigations, explorations, tests, studies and data concerning conditions (surface, subsurface, and Underground Facilities) at or contiguous to the Site or otherwise, which may affect cost, progress, performance or furnishing of Work or which relate to any aspect of the means, methods, techniques, sequences or procedures of construction to be employed by Bidder and safety precautions and programs incident thereto or which Bidder deems necessary to determine its Bid for performing and furnishing the Work in accordance with the time, price and other terms and conditions of Contract Documents. Bidders shall advise Owner in writing during the Bid period of any questions, suppositions, inferences or deductions Bidders may have for Owner's review and response.

B. Owner has provided time in the period prior to bidding for Bidder to perform these investigations.

6. ACCESS TO SITE FOR INVESTIGATIONS

A. During the Pre-Bid Site Visit(s), Owner will provide each Bidder access to the Site to conduct such examinations, investigations, explorations, tests, and studies, as each Bidder deems necessary for submission of a Bid. Bidders must fill all holes and clean up and restore the Site to its former conditions upon completion of such explorations, investigations, tests, and studies. Such investigations may be performed only under the provisions of Document 00200 (Instructions to Bidders) and Document 00700 (General Conditions) including, but not limited to, proof of insurance and obligation to indemnify against claims arising from such investigation work. Each Bidder shall supply all equipment required to perform any investigations as each Bidder deems necessary. Owner has the right to limit the number of pieces of machinery operating at one time due to safety concerns.

END OF DOCUMENT

DOCUMENT 00400

BID FORM

To be submitted as part of Bid Envelope by the time and date specified in Document 00200 (Instructions to Bidders), paragraph 1.

TO THE SONOMA COUNTY WATER AGENCY

THIS BID IS SUBMITTED BY:

_____

(Firm/Company Name)

Re: CONTRACT NUMBER 60-67-7 #2, Sonoma Tanks Fence Replacement

1. The undersigned Bidder proposes and agrees, if this Bid is accepted, to enter into an agreement with the Sonoma County Water Agency, a public agency of the State of California ("Owner") in the form included in the Contract Documents, Document 00520 (Agreement), to perform and furnish all Work as specified or indicated in the Contract Documents for the Contract Sum and within the Contract Time indicated in this Bid and in accordance with all other terms and conditions of the Contract Documents.

2. Bidder accepts all of the terms and conditions of the Contract Documents, Document 00100 (Notice Inviting Informal Bids), and Document 00200 (Instructions to Bidders), including, without limitation, those dealing with the disposition of Bid Security. This Bid will remain subject to acceptance for 90 Days after the day of Bid opening.

3. In submitting this Bid, Bidder represents:

   (a) Bidder has examined all of the Contract Documents and all of the Addenda (receipt of all of which is hereby acknowledged). The Addenda are listed below.

Addendum Number	**Addendum Date**	**Signature of Bidder**

   (b) Bidder has visited the Site and performed all tasks, research, investigation, reviews, examinations, and analysis and given notices, regarding the Project and the Site, as set forth in Document 00520 (Agreement), Article 5.

(c) Bidder has given Owner prompt written notice of all conflicts, errors, ambiguities, or discrepancies that it has discovered in or among the Contract Documents and as-built drawings and actual conditions and the written resolution thereof through Addenda issued by Owner is acceptable to Contractor.

4. Based on the foregoing, Bidder proposes and agrees to fully perform the Work within the time stated and in strict accordance with the Contract Documents for the following sums of money listed in the following Schedule of Bid Prices:

SCHEDULE OF BID PRICES

All Bid items, including lump sums and unit prices, must be filled in completely. Bid items are described in Section 01100 (Summary of Work). Quote in figures only, unless words are specifically requested.

ITEM	DESCRIPTION	ESTIMATED QUANTITY	UNIT	UNIT PRICE	TOTAL
1.	Bonds	XXXXXX	Lump Sum	XXXXX	$
2.	Insurance	XXXXXX	Lump Sum	XXXXX	$
3.	Safety Program and Implementation	XXXXXX	Lump Sum	XXXXX	$
4.	Construction Material Waste Management Plan and Implementation	XXXXXX	Lump Sum	XXXXX	$
5.	Chain Link Fence and Gates	XXXXXX	Lump Sum	XXXXX	$
6.	Existing Fence Removal and Disposal		Lump Sum		
				TOTAL BID PRICE	$

Total: _____
(Words)

5. Subcontractors for work included in all Bid items are listed on the attached Document 00430 (Subcontractors List).

6. The undersigned Bidder understands that Owner reserves the right to reject this Bid.

7. If written notice of the acceptance of this Bid, hereinafter referred to as Notice of Award, is mailed or delivered to the undersigned Bidder within the time described in paragraph 2 of this Document 00400 or at any other time thereafter unless the Notice of Award is withdrawn, the undersigned Bidder will execute and deliver the documents required by Document 00200 (Instructions to Bidders) within the times specified therein. These documents include, but are

not limited to, Document 00520 (Agreement), Document 00611 (Construction Performance Bond), and Document 00612 (Construction Labor and Material Payment Bond).

8. Notice of Award or request for additional information may be addressed to the undersigned Bidder at the address set forth below.

9. The undersigned Bidder herewith encloses cash, a cashier's check, or certified check of or on a responsible bank in the United States, or a corporate surety bond furnished by a surety authorized to do a surety business in the State of California, in form specified in Document 00200 (Instructions to Bidders), in the amount of ten percent (10%) of the Total Bid Price and made payable to "Sonoma County Water Agency."

10. The undersigned Bidder agrees to commence Work under the Contract Documents on the date established in Document 00700 (General Conditions) and to complete all work within the time specified in Document 00520 (Agreement). The undersigned Bidder acknowledges that Owner has reserved the right to delay or modify the commencement date. The undersigned Bidder further acknowledges Owner has reserved the right to perform independent work at the Site, the extent of such work may not be determined until after the opening of the Bids, and that the undersigned Bidder will be required to cooperate with such other work in accordance with the requirements of the Contract Documents.

11. The undersigned Bidder agrees that, in accordance with Document 00700 (General Conditions), liquidated damages for failure to complete all Work in the Contract within the time specified in Document 00520 (Agreement) shall be as set forth in Document 00520 (Agreement).

12. The names of all persons interested in the foregoing Bid as principals are:

(IMPORTANT NOTICE: If Bidder or other interested person is a corporation, give the legal name of corporation, state where incorporated, and names of president and secretary thereof; if a partnership, give name of the firm and names of all individual co-partners composing the firm; if Bidder or other interested person is an individual, give first and last names in full).

NAME OF BIDDER: _____
licensed in accordance with an act for the registration of Contractors, and with license number: _____ Expiration: _____.

_____ _____
Where incorporated, if applicable

_____

_____
Principals

I certify (or declare) under penalty of perjury under the laws of the State of California that the foregoing is true and correct.

_____
Signature of Bidder

_____
Date of Execution

_____
Place of Execution

NOTE: If Bidder is a corporation, set forth the legal name of the corporation together with the signature of the officer or officers authorized to sign contracts on behalf of the corporation. If Bidder is a partnership, set forth the name of the firm together with the signature of the partner or partners authorized to sign contracts on behalf of the partnership.

Business Address: _____

Contractor's Representative(s), (name, title): _____

Officers authorized to sign contracts: _____

_____
Signature of Officer

_____
Title

_____
Date of Execution

_____
Place of Execution

Telephone Number(s): _____

Fax Number(s): _____

Email address(es): _____

Date of Bid: _____

END OF DOCUMENT

DOCUMENT 00411

BOND ACCOMPANYING BID

KNOW ALL BY THESE PRESENTS:

That the undersigned _____ [Name of Contractor] as Principal and the undersigned as Surety are held and firmly bound unto the SONOMA COUNTY WATER AGENCY, a public agency of the State of California ("Owner"), as obligee, in the penal sum of _____ _____ _____ Dollars ($_____) lawful money of the United States of America being at least ten percent (10%) of the aggregate amount of said Principal _____'s base Bid, for the payment of which, well and truly to be made, we bind ourselves, our successors, executors, administrators, and assigns, jointly and severally, firmly by these presents.

WHEREAS, the said Principal is submitting a Bid for Owner Contract Number 60-67-7 #2, Sonoma County Water Agency.

THE CONDITION OF THIS OBLIGATION IS SUCH that if the Bid submitted by the said Principal be accepted and the Contract be awarded to said Principal and said Principal shall within the required periods enter into the Contract so awarded and provide the required Construction Performance Bond, Construction Labor and Material Payment Bond, insurance certificates, and all other endorsements, forms, and documents required under Document 00200 (Instructions to Bidders), then this obligation shall be void, otherwise to remain in full force and effect.

IN WITNESS WHEREOF, the above bounden parties have executed this instrument this _____ day of _____, 20_____, in _____, California.

(Corporate Seal)

By

_____

Principal

_____

Surety

(Corporate Seal)

By

_____

Attorney in Fact

(Evidence of execution shall be provided by Notarial Acknowledgement of the same, in accordance with California Civil Code section 1189, as amended January 1, 2008.)

END OF DOCUMENT

DOCUMENT 00420

BIDDER REGISTRATION FORM

INSTRUCTIONS

In order to register to undertake work for the Sonoma County Water Agency, Bidder must provide the following:

1) Fill out this registration form completely; do not leave blanks.
2) Provide certificates of insurance or a letter evidencing coverage complying with paragraph 4.1 of Document 00700 (General Conditions).

INDEPENDENT CONTRACTOR REGISTRATION

Contractor's License # _____

Date: _____ Fed I.D. # _____

Full Corporate Name of Company: _____

Street Address: _____

_____

Mailing Address: _____

_____

Phone: _____ Fax: _____

Name of Principal Contact: _____

Type of Business: _____ Sole Proprietor _____ Partnership
_____ Non-Profit 501 C3 _____ Corporation
_____ Other (please explain:_____)

INSURANCE

Workers' Compensation:

Carrier: _____

Address: _____

Phone and Fax: _____

Policy Number: _____

General Liability:

Carrier: _____

Address: _____

Phone and Fax: _____

Policy Number: _____

Policy Limits: $ _____

A.M. Best Rating: _____

Automobile Liability:

Carrier: _____

Address: _____

Phone and Fax: _____

Policy Number: _____

Policy Limits: $ _____

A.M. Best Rating: _____

All-risk Course of Construction (if applicable, as required by Document 00800 [Supplementary Conditions]):

Carrier: _____

Address: _____

Phone and Fax: _____

Policy Number: _____

Policy Limits: $ _____

A.M. Best Rating: _____

Professional Liability (if applicable, as required by Document 00800 [Supplementary Conditions]):

Carrier: _____

Address: _____

Phone and Fax: _____

Policy Number: _____

Policy Limits: $ _____

A.M. Best Rating: _____

Environmental Impairment Liability (if applicable, as required by Document 00800 [Supplementary Conditions]):

Carrier: _____

Address: _____

Phone and Fax: _____

Policy Number: _____

Policy Limits: $ _____

A.M. Best Rating: _____

BIDDER CERTIFIES, UNDER PENALTY OF PERJURY, THAT THE FOREGOING INFORMATION IS CURRENT AND ACCURATE AND AUTHORIZES THE SONOMA COUNTY WATER AGENCY, AND ITS AGENTS AND REPRESENTATIVES TO OBTAIN A CREDIT REPORT AND/OR VERIFY ANY OF THE ABOVE INFORMATION.

_____
Signature

_____
Date

END OF DOCUMENT

DOCUMENT 00430

SUBCONTRACTORS LIST

Bidder submits the following information as to the subcontractors Bidder intends to employ if awarded the Contract.

Full Name of Subcontractor and Address of Mill or Shop	Description of Work: Reference To Bid Items	Subcontractor's License No.

(Bidder to attach additional sheets if necessary)

END OF DOCUMENT

DOCUMENT 00481

NONCOLLUSION DECLARATION
PUBLIC CONTRACT CODE §7106

NONCOLLUSION DECLARATION TO BE EXECUTED BY BIDDER AND SUBMITTED WITH BID
The undersigned declares:

I am the _____ of _____, the party making the foregoing bid.
[Office of Declarant] [Name of Bidder]

The bid is not made in the interest of, or on behalf of, any undisclosed person, partnership, company, association, organization, or corporation. The bid is genuine and not collusive or sham. The bidder has not directly or indirectly induced or solicited any other bidder to put in a false or sham bid, and has not directly or indirectly colluded, conspired, connived or agreed with any bidder or anyone else to put in a sham bid, or to refrain from bidding. The bidder has not in any manner, directly or indirectly, sought by agreement, communication or conference with anyone to fix the bid price of the bidder or any other bidder, or to fix any overhead, profit or cost element of the bid price, or of that of any other bidder. All statements contained in the bid are true. The bidder has not, directly or indirectly, submitted his or her bid price or any breakdown thereof, or the contents thereof, or divulged information or data relative thereto, to any corporation, partnership, company, association, organization, bid depository, or to any member or agent thereof, to effectuate a collusive or sham bid, and has not paid, and will not pay, any person or entity for such purpose.

Any person executing this declaration on behalf of a bidder that is a corporation, partnership, joint venture, limited liability company, limited liability partnership, or any other entity, hereby represents that he or she has full power to execute, and does execute, this declaration on behalf of the bidder.

I declare under penalty of perjury under the laws of the State of California that the foregoing is true and correct and that this declaration is executed on _____ [date], at _____ [city], _____ [state].

_____
Signature of Principal

END OF DOCUMENT

CONTRACTING REQUIREMENTS

DOCUMENT 00510

NOTICE OF AWARD

Dated _____

TO: _____

ADDRESS: _____

CONTRACT NO.: 60-67-7 #2

CONTRACT FOR:

SONOMA TANKS FENCE REPLACEMENT

The Contract Sum of your contract is _____ _____ Dollars ($_____).

1. Several copies of the proposed Contract Documents listed below accompany this Notice of Award.

2. You must comply with the following conditions precedent by 5:00 p.m. of the 20th Day following the date of this Notice of Award, that is, by _____, _____ [month day, year].

   a. Deliver to Owner two fully executed counterparts of Document 00520 (Agreement). Each copy of Document 00520 (Agreement) must bear your original signature on the signature page and your initials on each page.
   b. Deliver to Owner four originals of Document 00611 (Construction Performance Bond), executed by you and your surety.
   c. Deliver to Owner four originals of Document 00612 (Construction Labor and Material Payment Bond), executed by you and your surety.
   d. Deliver to Owner original set of the insurance certificates with endorsements required under Document 00700 (General Conditions).
   e. Deliver to Owner two original copies of Document 00630 (Guaranty), each executed by you.
   f. Deliver to Owner one complete set of the documentary evidence received or generated by you in preparation of Bid prices for this Contract, as set forth in Document 00670 (Escrow Bid Documents).

3. Failure to comply with these conditions within the time specified will entitle Owner to consider your Bid abandoned, to annul this Notice of Award, and to declare your Bid security forfeited.

4. Within 21 Days after you comply with the conditions in paragraph 2 of this Document 00510, Owner will return to you one fully signed counterpart of Document 00520 (Agreement) with ten copies of the Project Manual (including Specifications and Drawings) and five sets of full-size Drawings.

5. Attend a Post-Notice of Award Meeting at Owner's office. This meeting will be scheduled for approximately one week after this Notice of Award is issued.

6. Upon commencement of Work, you and each of your Subcontractors shall certify and provide to Owner copies of payroll records on forms provided by the Division of Labor Standards Enforcement, in accordance with Section 1776 of the California Labor Code.

SONOMA COUNTY WATER AGENCY
A Public Agency of the State of California ("Owner")

BY: _____
Grant Davis, Water Agency General Manager

END OF DOCUMENT

DOCUMENT 00520

AGREEMENT

P/T#: 7570

THIS AGREEMENT, dated this ___ day of _____, 20__ , by and between _____ [Name of Contractor] whose place of business is located at _____ [Address of Contractor] ("Contractor"), and the SONOMA COUNTY WATER AGENCY ("Owner"), a public agency of the State of California acting under and by virtue of the authority vested in the Owner by the laws of the State of California.

Owner is currently pursuing ISO 9001 and ISO 14001 certification. ISO provides a program for documentation and consistent implementation of an organization's processes in order to ensure repeatability, accuracy, and predictability while achieving optimal customer satisfaction. ISO 9001 refers to Quality Management Systems (QMS) and ISO 14001 refers to Environmental Management Systems (EMS). The QMS focuses on business performance and achieving success, while the EMS focuses on reducing Owner's environmental impact. Owner has integrated the two management systems into one system referred to as Owner's EMS/QMS. Contract Documents contain information and requirements related to ISO.

WHEREAS, Owner, on the _____ day of _____ awarded to Contractor the following Contract:

CONTRACT NUMBER 60-67-7 #2
SONOMA COUNTY WATER AGENCY

NOW, THEREFORE, in consideration of the mutual covenants hereinafter set forth, Contractor and Owner agree as follows:

Article 1. Work

1.1 Contractor shall complete all Work specified in the Contract Documents, in accordance with the Specifications, Drawings, and all other terms and conditions of the Contract Documents.

Article 2. Notices to Owner

2.1 Owner has designated Jim Flugum, P.E. Construction Management Section Manager, to act as Owner's Representative(s), who will represent Owner in performing Owner's duties and responsibilities and exercising Owner's rights and authorities in Contract Documents. Owner may change the individual(s) acting as Owner's Representative(s), or delegate one or more specific functions to one or more specific Owner's Representatives, including without limitation engineering, architectural, inspection and general administrative functions, at any time with notice and without liability to Contractor. Each Owner's Representative is the beneficiary of all Contractor obligations to Owner, including without limitation, all releases and indemnities.

2.2 All notices or demands to Owner under the Contract Documents shall be to Owner's Representative at:

Hard copies: 404 Aviation Blvd., Santa Rosa, California 95403-9019
Electronic: address to be provided to Contractor by Owner with Notice to Proceed

or to such other person(s) and address(es) as Owner shall provide to Contractor.

Article 3. Contract Time and Liquidated Damages

3.1 Contract Time.

Contractor shall commence Work on the date established in the Notice to Proceed. Owner reserves the right to modify or alter the Commencement Date of the Work.

Contractor shall achieve Substantial Completion of the entire Work within **30** Days from the date when the Contract Time commences to run as provided in Document 00700 (General Conditions). Contractor shall achieve Final Completion of the entire Work and be ready for Final Payment in accordance with Section 01770 (Contract Closeout) **60** Days from the date when the Contract Time commences to run as provided in Document 00700 (General Conditions).

3.2 Liquidated Damages.

Owner and Contractor recognize that time is of the essence of this Agreement and that Owner will suffer financial loss in the form of Contract administration expenses (such as Project management and consultant expenses), if all or any part of the Work is not completed within the times specified above, plus any extensions thereof allowed in accordance with the Contract Documents. Contractor and Owner agree that because of the nature of the Project, it would be impractical or extremely difficult to fix the amount of actual damages incurred by Owner because of a delay in completion of all or any part of the Work. Accordingly, Owner and Contractor agree that as liquidated damages for delay Contractor shall pay Owner:

3.2.1 Three hundred dollars ($300.00) for each Day that expires after the time specified herein for Contractor to achieve Substantial Completion of the entire Work, until achieved.

3.2.2 Three hundred dollars ($300.00) for each Day that expires after the time specified herein for Contractor to achieve Final Completion of the entire Work, until achieved.

These measures of liquidated damages shall apply cumulatively and except as provided below, shall be presumed to be the damages suffered by Owner resulting from delay in completion of the Work.

Liquidated damages for delay shall only cover administrative, overhead, interest on bonds, and general loss of public use damages suffered by Owner as a result of delay. Liquidated damages shall not cover the cost of completion of the Work, or other damages, including but not limited to damages resulting from Defective Work, lost revenues or costs of substitute facilities, penalties and other costs associated with violation of legal requirements or damages suffered by others who then seek to recover their damages from Owner (for example, delay claims of other contractors, subcontractors, tenants, or other third-parties), and defense costs thereof.

Article 4. Contract Sum

4.1 Owner shall pay Contractor the Contract Sum for completion of Work in accordance with Contract Documents as follows:

ITEM	DESCRIPTION	ESTIMATED QUANTITY	UNIT	UNIT PRICE	TOTAL
1.	Bonds	XXXXXX	Lump Sum	XXXXX	$
2.	Insurance	XXXXXX	Lump Sum	XXXXX	$
3.	Safety Program and Implementation	XXXXXX	Lump Sum	XXXXX	$
4.	Construction Material Waste Management Plan and Implementation	XXXXXX	Lump Sum	XXXXX	$
5.	Chain Link Fence and Gates	XXXXXX	Lump Sum	XXXXX	$
6.	Existing Fence Removal and Disposal				
				TOTAL BID PRICE	$

Total: _____
(Words)

Article 5. Contractor's Representations

In order to induce Owner to enter into this Agreement, Contractor makes the following representations and warranties:

5.1 Contractor has visited the Site and has examined thoroughly and understood the nature and extent of the Contract Documents, Work, Site, locality, actual conditions, as-built conditions, and all local conditions, and federal, state and local laws and regulations that in any manner may affect cost, progress, performance or furnishing of Work or which relate to any aspect of the means, methods, techniques, sequences or procedures of construction to be employed by Contractor and safety precautions and programs incident thereto.

5.2 Contractor has examined thoroughly and understood all reports of exploration and tests of subsurface conditions, as-built drawings, drawings, products specifications or reports, available for Bidding purposes, of physical conditions, including Underground Facilities which may appear in the Drawings. Contractor accepts the determination set forth in these Documents and Document 00700 (General Conditions) of the limited extent of the information contained in such materials upon which Contractor may be entitled to rely. Contractor agrees that except for the

information so identified, Contractor does not and shall not rely on any other information contained in such reports and drawings.

5.3 Contractor has conducted or obtained and has understood all such examinations, investigations, explorations, tests, reports and studies (in addition to or to supplement those referred to in Section 5.2 of this Document 00520) that pertain to the subsurface conditions, as-built conditions, Underground Facilities and all other physical conditions at or contiguous to the Site or otherwise that may affect the cost, progress, performance or furnishing of Work, as Contractor considers necessary for the performance or furnishing of Work at the Contract Sum, within the Contract Time and in accordance with the other terms and conditions of the Contract Documents, including specifically the provisions of Document 00700 (General Conditions); and no additional examinations, investigations, explorations, tests, reports, studies or similar information or data are or will be required by Contractor for such purposes.

5.4 Contractor has correlated its knowledge and the results of all such observations, examinations, investigations, explorations, tests, reports and studies with the terms and conditions of the Contract Documents.

Article 6. Contract Documents

6.1 Contract Documents consist of the following documents, including all changes, Addenda, and Modifications thereto:

Document 00510	Notice of Award
Document 00520	Agreement
Document 00550	Notice to Proceed
Document 00611	Construction Performance Bond
Document 00612	Construction Labor and Material Payment Bond
Document 00630	Guaranty
Document 00650	Agreement and Release of Any and All Claims
Document 00660	Substitution Request Form
Document 00670	Escrow Bid Documents
Document 00700	General Conditions
Document 00800	Supplementary Conditions
Document 00910	Addenda
Specifications	Divisions 1 through 16
Drawings listed in Drawing No. G-1	

6.2 There are no Contract Documents other than those listed in this Document 00520, Article 6. The Contract Documents may only be amended, modified or supplemented as provided in Document 00700 (General Conditions).

Article 7. Miscellaneous

7.1 Terms and abbreviations used in this Agreement are defined in Document 00700 (General Conditions) and Section 01420 (References and Definitions) and will have the meaning indicated therein.

7.2 It is understood and agreed that in no instance are the persons signing this Agreement for or on behalf of Owner or acting as an employee, agent, or representative of Owner, liable on this Agreement or any of the Contract Documents, or upon any warranty of authority, or otherwise, and it is further understood and agreed that liability of the Owner is limited and confined to such liability as authorized or imposed by the Contract Documents or applicable law.

7.3 Contractor shall not assign any portion of the Contract Documents, and may subcontract portions of the Contract Documents only in compliance with the Subcontractor Listing Law, California Public Contract Code §4100 *et seq*. This Contract shall not be assigned or transferred without approval of General Manager. Any such assignment or transfer without approval of General Manager shall be void and of no force and effect.

7.4 The Contract Sum includes all allowances (if any).

7.5 In entering into a public works contract or a subcontract to supply goods, services or materials pursuant to a public works contract, Contractor or Subcontractor offers and agrees to assign to the awarding body all rights, title and interest in and to all causes of action it may have under Section 4 of the Clayton Act (15 U.S.C. §15) or under the Cartwright Act (Chapter 2 (commencing with Section 16700) of Part 2 of Division 7 of the Business and Professions Code), arising from purchases of goods, services or materials pursuant to the public works contract or the subcontract. This assignment shall be made and become effective at the time Owner tenders final payment to Contractor, without further acknowledgment by the parties.

7.6 Copies of the general prevailing rates of per diem wages for each craft, classification, or type of worker needed to execute the Contract, as determined by Director of the State of California Department of Industrial Relations, are deemed included in the Contract Documents and on file at Owner's Office, and shall be made available to any interested party on request. Pursuant to Section 1861 of the Labor Code, Contractor represents that it is aware of the provisions of Section 3700 of the Labor Code which require every employer to be insured against liability for workers' compensation or to undertake self-insurance in accordance with the provisions of that Code, and Contractor shall comply with such provisions before commencing the performance of the Work of the Contract Documents.

7.7 Should any part, term or provision of this Agreement or any of the Contract Documents, or any document required herein or therein to be executed or delivered, be declared invalid, void or unenforceable, all remaining parts, terms and provisions shall remain in full force and effect and shall in no way be invalidated, impaired or affected thereby. If the provisions of any law causing such invalidity, illegality or unenforceability may be waived, they are hereby waived to the end that this Agreement and the Contract Documents may be deemed valid and binding agreements, enforceable in accordance with their terms to the greatest extent permitted by applicable law. In the event any provision not otherwise included in the Contract Documents is required to be included by any applicable law, that provision is deemed included herein by this reference (or, if such provision is required to be included in any particular portion of the Contract Documents, that provision is deemed included in that portion).

7.8 This Agreement and the Contract Documents shall be deemed to have been entered into in the County of Sonoma, State of California, and governed in all respects by California law

(excluding choice of law rules). The exclusive venue for all disputes or litigation hereunder shall be in Sonoma County.

7.9 Contractor accepts the claims procedure established by Article 12 of Document 00700 (General Conditions), as established under Section 930.2 et seq. of the California Government Code.

/
/
/
/
/
/
/
/
/
/
/
/
/
/
/
/
/
/

IN WITNESS WHEREOF the parties have executed this Agreement in duplicate the day and year first above written.

Reviewed as to funds by Owner:

_____
Division Manager - Administrative Services

Reviewed as to form by County Counsel:

_____
County Counsel

Certificates of Insurance and Guaranty are on file with and reviewed as to substance for Owner by:

_____
Contract Administration/Inspection Date

CONTRACTOR:

_____
[Contractor's name]

By: _____
[Signature]

_____
[Please print name here]

Title: _____

[If Corporation: Chairman, President, or Vice President]

By: _____
[Signature]

_____
[Please print name here]

Title: _____
[If Corporation: Secretary, Assistant Secretary, Chief Financial Officer, or Assistant Treasurer]

OWNER:

SONOMA COUNTY WATER AGENCY, a Public Agency of the State of California

By: _____
Water Agency General Manager

END OF DOCUMENT

DOCUMENT 00550

NOTICE TO PROCEED

Dated: _____, 20__

To: _____

_____
(Contractor)

Address: _____

_____

CONTRACT FOR: CONTRACT NUMBER 60-67-7 #2

You are notified that the Contract Time under the above Contract will commence to run on _____ 20___. On that date, you are to start performing your obligations with respect to Work under the Contract Documents. In accordance with Article 3 of Document 00520 (Agreement), the dates of Substantial Completion and Final Completion for the entire Work are _____, 20___ and _____, 20___, respectively.

In accordance with Article 11 of Document 00700 (General Conditions), on _____[date] you must submit preliminary schedules (Initial Schedule, Schedule of Submittals, and Schedule of Values).

In accordance with Section 01315 (Project Meetings), on _____ [date] you must attend a Schedule Review Meeting.

Before you may start any Work at the Site, you must:
[add conditions, if any]_____

_____

From this date forward, submit one electronic copy and at least one hard copy of all Project documents, unless otherwise required by the Contract Documents.

Upon commencement of the Work, you and each of your Subcontractors shall certify and provide Owner copies of payroll records on forms provided by the Division of Labor Standards Enforcement, in accordance with Section 1776 of the California Labor Code.

SONOMA COUNTY WATER AGENCY,
A Public Agency of the State of California

By : _____

Its: _____

[Notice to be sent in manner required by Contract Documents]

END OF DOCUMENT

DOCUMENT 00611

CONSTRUCTION PERFORMANCE BOND

ABBREVIATED EDITION

KNOW ALL PERSONS BY THESE PRESENTS:

1. THAT WHEREAS, the Sonoma County Water Agency, a public agency of the State of California ("Owner") has awarded to _____[Name of Contractor] as Principal Contract Number 60-67-7 #2 dated the _____ day of _____, (the "Contract"), titled SONOMA TANKS FENCE REPLACEMENT in the amount of _____, which Contract is by this reference made a part hereof, for the work described as follows:

   Work comprises construction of Owner's Sonoma Tanks Fence Replacement, Sonoma, California including without limitation installation and replacement of 1,400 feet of security fencing around the Sonoma Storage Tanks, wildlife pass thru's, double drive gate, walk thru gate, and appurtenances. Contract Documents fully describe the Work.

2. AND WHEREAS, Principal is required to furnish a bond in connection with the Contract, guaranteeing the faithful performance thereof;

3. NOW, THEREFORE, we, the undersigned Principal and _____ as Surety are held and firmly bound unto Owner in the sum of 100% OF THE CONTRACT PRICE to be paid to Owner or its successors and assigns; for which payment, well and truly to be made, we bind ourselves, our heirs, executors, administrators, successors, and assigns, jointly and severally, firmly by these presents.

4. THE CONDITION OF THIS OBLIGATION IS SUCH, that if Principal, or its heirs, executors, administrators, successors, or assigns approved by Owner, shall promptly and faithfully perform the covenants, conditions, and agreements of the Contract during the original term and any extensions thereof as may be granted by Owner, with or without notice to Surety, and during the period of any guarantees or warranties required under the Contract, and shall also promptly and faithfully perform all the covenants, conditions, and agreements of any alteration of the Contract made as therein provided, notice of which alterations to Surety being hereby waived, on Principal's part to be kept and performed at the time and in the manner therein specified, and in all respects according to their true intent and meaning, and shall indemnify, defend, protect, and hold harmless Owner as stipulated in the Contract, then this obligation shall become and be null and void; otherwise it shall be and remain in full force and effect.

5. No extension of time, change, alteration, modification, or addition to the Contract, or of the work required thereunder, shall release or exonerate Surety on this bond or in any way affect the obligation of this bond; and Surety does hereby waive notice of any such extension of time, change, alteration, modification, or addition.

6. Whenever Principal shall be and declared by Owner in default under the Contract, Surety shall promptly remedy the default, or shall promptly:

6.1 Undertake through its agents or independent contractors, reasonably acceptable to Owner, to complete the Contract in accordance with its terms and conditions and to pay and perform all obligations of Principal under the Contract, including without limitation, all obligations with respect to warranties, guarantees, indemnities, and the payment of liquidated damages; or

6.2 Obtain a bid or bids for completing the Contract in accordance with its terms and conditions, and, upon determination by Owner of the lowest responsible bidder, arrange for a contract between such bidder and Owner and make available as work progresses (even though there should be a default or a succession of defaults under the contract or contracts of completion arranged under this paragraph) sufficient funds to pay the cost of completion less the balance of the Contract Sum, and to pay and perform all obligations of Principal under the Contract, including, without limitation, all obligations with respect to warranties, guarantees, and the payment of liquidated damages; but, in any event, Surety's total obligations hereunder shall not exceed the amount set forth in the third paragraph hereof. The term "balance of the Contract Sum," as used in this paragraph, shall mean the total amount payable by Owner to the Principal under the Contract and any amendments thereto, less the amount paid by Owner to Principal.

7. Surety's obligations hereunder are independent of the obligations of any other surety for the performance of the Contract, and suit may be brought against Surety and such other sureties, jointly and severally, or against any one or more of them, or against less than all of them without impairing Owner's rights against the others. Surety may not use Contractor to complete the Contract absent Owner's Consent.

8. No right of action shall accrue on this bond to or for the use of any person or corporation other than Owner or its successors or assigns.

9. Surety may join in any proceedings brought under the Contract and shall be bound by any judgment.

10. Correspondence or claims relating to this bond shall be sent to Surety at the address set forth below.

IN WITNESS WHEREOF, we have hereunto set our hands this _____ day of _____, 20__.

CONTRACTOR AS PRINCIPAL	SURETY
Company: (Corp. Seal)	Company: (Corp. Seal)
Signature:_____	Signature:_____
Name and Title:_____	Name and Title:_____
Address:_____	Address:_____
_____	_____
_____	_____

END OF DOCUMENT

DOCUMENT 00612

CONSTRUCTION LABOR AND MATERIAL PAYMENT BOND

ABBREVIATED EDITION

KNOW ALL PERSONS BY THESE PRESENTS:

1. THAT WHEREAS, the Sonoma County Water Agency, a public agency of the State of California ("Owner") has awarded to _____[Name of Contractor] as Principal Contract Number 60-67-7#2 dated the _____ day of _____, (the "Contract"), titled SONOMA TANKS FENCE REPLACEMENT in the amount of _____, which Contract is by this reference made a part hereof, for the work described as follows:

   Work comprises construction of Owner's Sonoma Tanks Fence Replacement, Sonoma, California including without limitation installation and replacement of 1,400 feet of security fencing around the Sonoma Storage Tanks, wildlife pass thru's, double drive gate, walk thru gate, and appurtenances. Contract Documents fully describe the Work.

2. AND WHEREAS, Principal is required to furnish a bond in connection with the Contract to secure the payment of claims of laborers, mechanics, material suppliers, and other persons as provided by law;

3. NOW, THEREFORE, we, the undersigned Principal and _____, as Surety, are held and firmly bound unto Owner in the sum of 100% OF THE CONTRACT PRICE ($_____), for which payment well and truly to be made we bind ourselves, our heirs, executors, administrators, successors, and assigns, jointly and severally, firmly by these presents.

4. THE CONDITION OF THIS OBLIGATION IS SUCH, that if Principal, or its heirs, executors, administrators, successors, or assigns approved by Owner, or its subcontractors shall fail to pay any of the persons named in State of California, Civil Code, Section 9100, or amounts due under the State of California Unemployment Insurance Code with respect to work or labor performed under the Contract, or for any amounts required to be deducted, withheld, and paid over to the State of California Employment Development Department from the wages of employees of Principal and subcontractors pursuant to Section 13020 of the State of California Unemployment Insurance Code with respect to such work and labor, that Surety will pay for the same in an amount not exceeding the sum specified in this bond, plus reasonable attorneys' fees, otherwise the above obligation shall become and be null and void.

5. This bond shall inure to the benefit of any of the persons named in State of California Civil Code, Section 9100, as to give a right of action to such persons or their assigns in any suit brought upon this bond. The intent of this bond is to comply with the California Mechanic's Lien Law.

6. Surety, for value received, hereby expressly agrees that no extension of time, change, modification, alteration, or addition to the undertakings, covenants, terms, conditions, and agreements of the Contract, or to the work to be performed thereunder, shall in any way affect the obligation of this bond; and it does hereby waive notice of any such extension of time, change, modification, alteration, or addition to the undertakings, covenants, terms, conditions, and agreements of the Contract, or to the work to be performed thereunder.

7. Surety's obligations hereunder are independent of the obligations of any other surety for the payment of claims of laborers, mechanics, material suppliers, and other persons in connection with Contract; and suit may be brought against Surety and such other sureties, jointly and severally, or against any one or more of them, or against less than all of them without impairing Owner's rights against the other.

8. Correspondence or claims relating to this bond shall be sent to Surety at the address set forth below.

IN WITNESS WHEREOF, we have hereunto set our hands this _____ day of _____, 20__.

CONTRACTOR AS PRINCIPAL	SURETY
Company: (Corp. Seal)	Company: (Corp. Seal)
Signature:_____	Signature:_____
Name and Title:_____	Name and Title:_____
Address:_____	Address:_____
_____	_____
_____	_____

END OF DOCUMENT

DOCUMENT 00630

GUARANTY

To the SONOMA COUNTY WATER AGENCY, for construction of

SONOMA TANKS FENCE REPLACEMENT

Sonoma, California

The undersigned guarantees all construction performed on this Project and also guarantees all material and equipment incorporated therein.

Contractor hereby grants to Owner for a period of one year following the date of Final Acceptance of the Work completed, or such longer period specified in the Contract Documents, its unconditional warranty of the quality and adequacy of all of the Work including, without limitation, all labor, materials and equipment provided by Contractor and its Subcontractors of all tiers in connection with the Work.

Neither final payment nor use or occupancy of the Work performed by the Contractor shall constitute an acceptance of Work not done in accordance with this Guaranty or relieve Contractor of liability in respect to any express warranties or responsibilities for faulty materials or workmanship. Contractor shall remedy any defects in the Work and pay for any damage resulting therefrom, which shall appear within one year, or longer if specified, from the date of Final Acceptance of the Work completed.

If within one year after the date of Final Acceptance of the Work completed, or such longer period of time as may be prescribed by laws or regulations, or by the terms of Contract Documents, any Work is found to be Defective, Contractor shall promptly, without cost to Owner and in accordance with Owner's written instructions, correct such Defective Work. Contractor shall remove any Defective Work rejected by Owner and replace it with Work that is not Defective, and satisfactorily correct or remove and replace any damage to other Work or the work of others resulting therefrom. If Contractor fails to promptly comply with the terms of such instructions, or in an emergency where delay would cause serious risk of loss or damage, Owner may have the Defective Work corrected or the rejected Work removed and replaced. Contractor shall pay for all claims, costs, losses and damages caused by or resulting from such removal and replacement. Where Contractor fails to correct Defective Work, or defects are discovered outside the correction period, Owner shall have all rights and remedies granted by law.

Inspection of the Work shall not relieve Contractor of any of its obligations under the Contract Documents. Even though equipment, materials, or Work required to be provided under the Contract Documents have been inspected, accepted, and estimated for payment, Contractor shall, at its own expense, replace or repair any such equipment, material, or Work found to be Defective or otherwise not to comply with the requirements of the Contract Documents up to the end of the guaranty period.

All abbreviations and definitions of terms used in this Agreement shall have the meanings set forth in the Contract Documents, including, without means of limitation, Document 00700 (General Conditions) and Section 01420 (References and Definitions).

The foregoing Guaranty is in addition to any other warranties of Contractor contained in the Contract Documents, and not in lieu of, any and all other liability imposed on Contractor under the Contract Documents and at law with respect to Contractor's duties, obligations, and performance under the Contract Documents. In the event of any conflict or inconsistency between the terms of this Guaranty and any warranty or obligation of the Contractor under the Contract Documents or at law, such inconsistency or conflict shall be resolved in favor of the higher level of obligation of the Contractor.

_____
[Contractor's name]

By: _____
[Signature]

_____
[Please print name here]

Title: _____

Business Address:_____
_____
_____

Date: _____

END OF DOCUMENT

DOCUMENT 00650

AGREEMENT AND RELEASE OF ANY AND ALL CLAIMS

THIS AGREEMENT AND RELEASE OF ANY AND ALL CLAIMS ("Agreement and Release"), made and entered into this _____ [date] day of _____ [month], _____ [year], by and between the Sonoma County Water Agency, a public agency of the State of California ("Owner"), and _____ [name of Contractor] ("Contractor"), whose place of business is at _____ _____ [address of Contractor].

RECITALS

A. Owner and Contractor entered into Contract Number 60-67-7 #2 (the "Contract").

B. The Work under the Contract has been completed.

Now, therefore, it is mutually agreed between Owner and Contractor as follows:

AGREEMENT

1. Contractor will not be assessed liquidated damages except as detailed below:

Original Contract Sum	$ _____
Modified Contract Sum	$ _____
Payment to Date	$ _____
Liquidated Damages	$ _____
Payment Due Contractor	$ _____

2. Subject to the provisions of this Agreement and Release, Owner will forthwith pay to Contractor the sum of $_____ Dollars and _____ Cents ($_____) under the Contract, less any amounts withheld under the Contract or represented by any Notice to Withhold Funds on file with Owner as of the date of such payment.

3. Contractor acknowledges and hereby agrees that there are no unresolved or outstanding claims in dispute against Owner arising from the Contract, except for the claims described in paragraph 4 of this Document 00650. It is the intention of the parties in executing this Agreement and Release that this Agreement and Release shall be effective as a full, final and general release of all claims, demands, actions, causes of action, obligations, costs, expenses, damages, losses and liabilities of Contractor against Owner, and all of its agents, employees, consultants, inspectors, representatives, assignees and transferees, except for the Disputed Claims set forth in paragraph 4 of this Document 00650. Nothing in this Agreement and Release shall limit or modify Contractor's continuing obligations described in paragraph 6 of this Document 00650.

4. The following claims submitted under Document 00700 (General Conditions), Article 12, are disputed (hereinafter, the "Disputed Claims") and are specifically excluded from the operation of this Agreement and Release:

Claim No.	Date Submitted	Description of Claim	Amount of Claim

[Insert information, including attachment if necessary]

5. Consistent with California Public Contract Code Section 7100, Contractor hereby agrees that, in consideration of the payment set forth in paragraph 2 of this Document 00650, Contractor hereby releases and forever discharges Owner, and all of its agents, employees, consultants, inspectors, assignees and transferees from any and all liability, claims, demands, actions or causes of action of whatever kind or nature arising out of or in any way concerned with the Work under the Contract.

6. Guarantees and warranties for the Work, and any other continuing obligation of Contractor, shall remain in full force and effect as specified in the Contract Documents.

7. Contractor shall immediately defend, indemnify and hold harmless Owner, any Owner's Representatives, Engineer, and all of their agents, employees, consultants, inspectors, assignees and transferees, from any and all claims, demands, actions, causes of action, obligations, costs, expenses, damages, losses and liabilities that may be asserted against them by any of Contractor's suppliers and/or Subcontractors of any tier and/or any suppliers to them for any and all labor, materials, supplies and equipment used, or contemplated to be used in the performance of the Contract, except for the Disputed Claims set forth in paragraph 4 of this Document 00650.

8. Contractor hereby waives the provisions of California Civil Code Section 1542, which provide as follows:

> A general release does not extend to claims which the creditor does not know or suspect to exist in his favor at the time of executing the release,

which if known by him, must have materially affected his settlement with the debtor.

9. The provisions of this Agreement and Release are contractual in nature and not mere recitals and shall be considered independent and severable, and if any such provision or any part thereof shall be at any time held invalid in whole or in part under any federal, state, county, municipal or other law, ruling, or regulation, then such provision, or part thereof shall remain in force and effect only to the extent permitted by law, and the remaining provisions of this Agreement and Release shall also remain in full force and effect, and shall be enforceable.

10. Contractor represents and warrants that it is the true and lawful owner of all claims and other matters released pursuant to this Agreement and Release, and that it has full right, title and authority to enter into this instrument. Each party represents and warrants that it has been represented by counsel of its own choosing in connection with this Agreement and Release.

11. All rights of Owner shall survive completion of the Work or termination of the Contract, and execution of this Agreement and Release.

* * * CAUTION: THIS IS A RELEASE - READ BEFORE EXECUTING * * *

SONOMA COUNTY WATER AGENCY,
A Public Agency of the State of California

By: _____
Water Agency General Manager

[CONTRACTOR]

By: _____

Name: _____

Its: _____

By: _____

Name: _____

Its: _____

REVIEWED AS TO FORM:

_____
County Counsel

_____, 20 _____

END OF DOCUMENT

DOCUMENT 00660

SUBSTITUTION REQUEST FORM

During Bid Period To:	After Award of Contract To:
Jim Flugum, P.E. Sonoma County Water Agency Fax: 707-524-3791	Construction Management Section Sonoma County Water Agency Fax: 707-524-3791

Project: Sonoma Tanks Fence Replacement

Bidder: _____

Subcontractor/Supplier: _____

Drawing Sheet Reference/Detail No: _____

The undersigned Bidder submits for consideration the following equipment instead of the specified item for the above Project:

Section	Paragraph	Specified Item
_____	_____	_____
_____	_____	_____

Proposed Substitution: _____

_____

The undersigned encloses the information required herein. If this Document 00660 is being submitted by a Bidder wishing to use "equal" item(s) as provided in Document 00200 (Instructions to Bidders), the undersigned Bidder must also enclose the technical information (other than cost) otherwise required for a post-Award of Contract Request for Substitution ("RFS").

The undersigned has (a) attached manufacturer's literature, including complete technical data and laboratory test results, if applicable, (b) attached an explanation of why proposed substitution is a true equivalent to specified item, (c) included complete information on changes to Contract Documents that the proposed substitution will require for its proper installation, and (d) filled in the blanks below:

A. Does the substitution affect dimensions shown on Drawings? (If yes, please explain)

_____

B. Are the manufacturer's guarantees and warranties on the proposed substitution items identical to those on the specified items? If there are differences, please specify each and every difference in detail.

_____

C. What effect does the substitution have on other contractors, trades, or suppliers?

_____

D. What are the differences between the proposed substitution and the specified item? If proposed substitution has a color or pattern, provide a color board showing proposed substitution in relation to the other adjacent colors and patterns.

_____

E. Will granting the requested substitution cause any schedule delay? (If yes, please explain)

_____

The undersigned Bidder certifies that the function, appearance, and quality of the proposed substitution are equivalent or superior to those of the specified item.

Submitted by:

_____
Bidder

_____
Signature

_____
Name

_____
Address

_____
City/State/Zip

Telephone: _____

Date: _____

For Use by Owner:

___ Accepted _____Accepted as Noted

___ Not Accepted _____Received Too Late

By: _____
Owner's Representative

Date: _____

Remarks: _____

_____

_____

_____

END OF DOCUMENT

CONDITIONS OF THE CONTRACT

DOCUMENT 00700

GENERAL CONDITIONS

ABBREVIATED EDITION

TABLE OF CONTENTS

1. GENERAL 1
   - 1.1 Documents 1
   - 1.2 Exercise Of Contract Responsibilities 1
   - 1.3 Defined Terms 1
2. BIDDING 1
   - 2.1 Investigation Prior To Bidding 1
   - 2.2 Subcontractors 2
3. COMMENCEMENT OF THE WORK 3
   - 3.1 Commencement Of Work 3
4. INSURANCE 3
   - 4.1 Insurance 3
5. DRAWINGS AND SPECIFICATIONS 3
   - 5.1 Intent 3
   - 5.2 Drawing Details 3
   - 5.3 Interpretation Of Drawings And Specifications 4
   - 5.4 Checking Of Drawings 4
   - 5.5 Standards To Apply Where Specifications Are Not Furnished 4
   - 5.6 Deviation From Specifications And Drawings 4
   - 5.7 Precedence Of Documents 5
   - 5.8 Ownership And Use Of Drawings, Specifications And Contract Documents 5
6. CONSTRUCTION BY OWNER OR BY SEPARATE CONTRACTORS 5
7. OWNER'S REPRESENTATIVES AND AUTHORITIES 6
   - 7.1 Owner's Representative(s) 6
   - 7.2 Means And Methods Of Construction 6
8. CONTROL OF THE WORK 6
   - 8.1 Supervision Of Work By Contractor 6
   - 8.2 Observation Of Work By Owner 7
   - 8.3 Access To Work 7
   - 8.4 Existing Utilities Shown Or Indicated In Contract Documents 8
   - 8.5 Protection Of Underground Facilities When Digging Trenches Or During Excavation 9
9. WARRANTY, GUARANTY, AND INSPECTION OF WORK 10
   - 9.1 Warranty And Guaranty 10
   - 9.2 Inspection Of Work 11
   - 9.3 Correction Of Defective Work 12

9.4 Acceptance And Correction Of Defective Work By Owner 13
9.5 Rights Upon Inspection, Correction, Or Acceptance 14
9.6 Proof Of Compliance Of Contract Provisions 15

10. CONTRACTOR'S ORGANIZATION AND EQUIPMENT 15

10.1 Contractor's Legal Address 15
10.2 Contractor's Superintendents Or Forepersons 15
10.3 Proficiency In English 15
10.4 Contractor's And Subcontractors' Employees 15
10.5 Contractor To Supply Sufficient Workers And Materials 16
10.6 Contractor's Use Of The Site 16
10.7 Temporary Facilities 16
10.8 Apprenticeship Program 17

11. PROSECUTION AND PROGRESS OF THE WORK 17

11.1 Schedules And Examinations Of Contract Documents 17
11.2 Cost Data 18

12. CLAIMS BY CONTRACTOR 19

12.1 Obligation to File Claims for Disputed Work 19
12.2 Form and Contents of Claim 19
12.3 Administration During/After Claim Submission 19
12.4 Compliance 20

13. LEGAL AND MISCELLANEOUS 20

13.1 Laws And Regulations 20
13.2 Permits And Taxes 21
13.3 Responsibility Of Contractor And Indemnification 21
13.4 Concealed Or Unknown Conditions 22
13.5 Notice Of Hazardous Waste Or Materials Conditions 22
13.6 Suspension Of Work 24
13.7 Termination Of Contract For Cause 24
13.8 Termination Of Contract For Convenience 24
13.9 Contingent Assignment Of Subcontracts 25
13.10 Remedies And Contract Integration 25
13.11 Patents 26
13.12 Substitution For Patented And Specified Articles 26
13.13 Interest Of Public Officers 27
13.14 Limit Of Liability 27

14. MODIFICATIONS OF CONTRACT DOCUMENTS 27

14.1 Alterations, Modifications, And Force Account Work 27

15. TIME ALLOWANCES 28

15.1 Entitlement To Change Of Contract Time 28
15.2 Weather-Related Delays 28
15.3 Notice Of Delay 29
15.4 Time Extensions And/Or Compensation Entitlement For Delays 29
15.5 Liquidated Damages 30

16. WORKING CONDITIONS AND PREVAILING WAGES 30

16.1 Use Of Site/Sanitary Rules 30
16.2 Protection Of Work, Persons, And Property 31
16.3 Responsibility For Safety And Health 32
16.4 Emergencies 32
16.5 Use Of Roadways And Walkways 32
16.6 Nondiscrimination 33
16.7 Prevailing Wages 33
16.8 Environmental Controls 34
16.9 Shoring Safety Plan 34

GENERAL CONDITIONS

1. GENERAL

1.1 Documents

1.1.A. Contract Documents are complementary; what is called for by one is as binding as if called for by all. Contract Documents shall not be construed to create a contractual relationship of any kind between (1) Engineer or any Owner's Representative and Contractor; (2) Owner and/or its representatives and a Subcontractor, sub-Subcontractor, or supplier of any Project labor, materials, or equipment; or (3) between any persons or entities other than Owner and Contractor. Owner shall be deemed to be an intended third-party beneficiary of each agreement referenced in clause (2) above, and each such agreement shall so provide. Contractor is fully responsible for Contractor's own acts and omissions. Contractor is responsible for all acts and omissions of its Subcontractors, suppliers, and other persons and organizations performing or furnishing any of the Work, labor, materials, or equipment under a direct or indirect contract with Contractor.

1.2 Exercise Of Contract Responsibilities

1.2.A. In exercising its responsibilities and authorities under the Contract Documents, Owner does not assume any duties or responsibilities to any Subcontractor or supplier and does not assume any duty of care to Contractor, Contractor's Subcontractors or suppliers. Except as expressly set forth in the Contract Documents, in exercising their respective responsibilities and authorities under the Contract Documents, neither Engineer nor any Owner's Representative assumes any duties or responsibilities to any Subcontractor, sub-Subcontractor or supplier nor assumes any duty of care to Contractor or any Subcontractor, sub-Subcontractor or suppliers.

1.3 Defined Terms

1.3.A. All abbreviations and definitions of terms used and not otherwise defined in this Document 00700 are set forth in Section 01420 (References and Definitions). This Document 00700 subdivides at first level into Articles, and then into paragraphs.

2. BIDDING

2.1 Investigation Prior To Bidding

2.1.A. Prior to bidding, Bidders shall perform the work, investigations, research and analysis required by Article 5 of Document 00520 (Agreement). Under the Contract Documents, Contractor is charged with all information and knowledge that a reasonable Bidder would ascertain from having performed the required work, investigations, research, and analysis. Bid prices shall include entire cost of all "incidental work" to complete the Work, as that term is defined in Article 5 of this Document 00700.

2.1.B. Conditions Shown on Contract Documents: Information as to underground conditions, as-built conditions, or other conditions or obstructions indicated in the Contract Documents, *e.g.*, on Drawings or in Specifications, has been obtained with reasonable care, and has been recorded in good faith. Owner warrants, and Contractor may rely on, the accuracy of only limited types of information as discussed below.

1. Aboveground and As-Built Conditions: There is no express or implied warranty and no express or implied representation that any information as to aboveground conditions or as-built conditions indicated in the Contract Documents is correctly shown, or indicated, or complete. As a condition to bidding, Contractor shall verify by independent investigation all aboveground and as-built conditions. In submitting its Bid, Contractor shall rely on the results of its own independent investigation and shall not rely on Owner-supplied information regarding aboveground conditions and as-built conditions.
2. Subsurface Conditions: Contractor may rely only upon the general accuracy of actual reported depths, actual reported character of materials, actual reported soil types, actual reported water conditions, or actual obstructions shown or indicated in the Contract Documents. Owner is not responsible for (1) the completeness of any subsurface condition information for bidding or construction, (2) Contractor's conclusions or opinions drawn from any subsurface condition information, or (3) subsurface conditions that are not specifically shown. (For example, Owner is not responsible for soil conditions in areas contiguous to areas where a subsurface condition is shown.)

2.1.C. Conditions Shown in Reports and Drawings Supplied for Informational Purposes: The Owner may have made available during Bidding certain geotechnical reports, "as-built" information, and other drawings or other documents describing physical conditions in or relating to existing surface or subsurface conditions or structures at or contiguous to the Site, but not included in the Contract Documents. These materials are not Contract Documents and, except for any "technical data" regarding actual subsurface conditions (actual reported soil types, obstructions, structures, materials encountered) and "Underground Facilities" data, Contractor shall not in any manner rely on the information in these materials. Contractor shall rely on the results of its own independent investigation of all such conditions affecting the Work and must not rely on information provided by Owner.

2.2 Subcontractors

2.2.A. Consistent with Public Contract Code Sections 4101 *et seq.*, Contractor shall not substitute any other person or firm in place of any Subcontractor listed in the Bid. Subcontractors shall not assign or transfer their subcontracts or permit them to be performed by any other contractor without Owner's written approval. At Owner's request, Contractor shall provide Owner with a complete copy of all executed subcontracts or final commercial agreements with Subcontractors and/or suppliers.

2.2.B. Subcontract agreements shall preserve and protect the rights of Owner under the Contract Documents so that subcontracting will not prejudice such rights. To the extent of the Work to be performed by a Subcontractor, Contractor shall require the Subcontractor's written agreement (1) to be bound to the terms of Contract Documents and (2) to assume vis-à-vis Contractor all the obligations and responsibilities that Contractor assumes toward Owner under the Contract Documents. (These agreements include, but are not limited to, all warranties, claims procedures and rules governing submittals to which Contractor is subject under the Contract Documents.)

2.2.C. Contractor shall provide for the assignment to Owner of all rights any Subcontractor may have against any manufacturer, supplier, or distributor for breach of warranties and guarantees relating to the Work performed by the Subcontractor under the Contract Documents.

3. COMMENCEMENT OF THE WORK

3.1 Commencement Of Work

3.1.A. The Contract Time will commence to run on the 60th Day after the issuance of the Notice of Award or, if a Notice to Proceed is given, on the date indicated in the Notice to Proceed. Owner may give a Notice to Proceed at any time within 60 Days after the Notice of Award. Contractor shall not do any Work at the Site prior to the date on which the Contract Time commences to run.

4. INSURANCE

4.1 Insurance

4.1.A. See paragraph 2.A of Document 00800 (Supplementary Conditions), incorporated herein by this reference.

5. DRAWINGS AND SPECIFICATIONS

5.1 Intent

5.1.A. Contractor shall interpret words or phrases used to describe Work (including services), materials, or equipment that have well-known technical or construction industry or trade meaning in accordance with that meaning. Drawings' intent specifically includes the intent to depict construction that complies with all applicable laws, codes and standards.

5.1.B. As part of the "Work," Contractor shall provide all labor, materials, equipment, machinery, tools, facilities, services, employee training and testing, hoisting facilities, Shop Drawings, storage, testing, security, transportation, disposal, the securing of all necessary or required field dimensions, the cutting or patching of existing materials, notices, permits, documents, reports, agreements and any other items required or necessary to timely and fully complete Work described and the results intended by Contract Documents and, in particular, Drawings and Specifications. Divisions and Specification Sections and the identification on any Drawings shall not control Contractor in dividing Work among Subcontractors or suppliers or delineating the Work to be performed by any specific trade.

5.1.C. Contractor shall perform reasonably implied parts of Work as "incidental work" although absent from Drawings and Specifications. Incidental work includes any work not shown on Drawings or described in Specifications that is necessary or normally or customarily required as a part of the Work shown on Drawings or described in Specifications. Incidental work includes any work necessary or required to make each installation satisfactory, legally operable, functional, and consistent with the intent of Drawings and Specifications or the requirements of Contract Documents. Contractor shall perform incidental work without extra cost to Owner. Incidental work shall be treated as if fully described in Specifications and shown on Drawings, and the expense of incidental work shall be included in price Bid and Contract Sum.

5.2 Drawing Details

5.2.A. A typical or representative detail on Drawings shall constitute the standard for workmanship and material throughout corresponding parts of Work. Where necessary, and where reasonably inferable from Drawings, Contractor shall adapt such representative detail for application to such corresponding parts of Work. The details

of such adaptation shall be subject to prior approval by Owner. Repetitive features shown in outline on Drawings shall be in exact accordance with corresponding features completely shown.

5.3 Interpretation Of Drawings And Specifications

5.3.A. Should any discrepancy appear or any misunderstanding arise as to the import of anything contained in Drawings and Specifications, or should Contractor have any questions or requests relating to Drawings or Specifications, Contractor shall refer the matter to Owner, in writing. Owner will issue with reasonable promptness written responses, clarifications or interpretations as Owner may determine necessary, which shall be consistent with the intent of and be reasonably inferable from Contract Documents. Such written clarifications or interpretations shall be binding upon Contractor. If Contractor believes that a written response, clarification or interpretation justifies an adjustment in the Contract Sum or Contract Time, Contractor shall give Owner prompt written notice. If the parties are unable to agree to the amount or extent of the adjustment, if any, then Contractor shall perform the Work in conformance with Owner's response, clarification, or interpretation and may make a written claim for the adjustment as provided in Article 12 of this Document 00700.

5.4 Checking Of Drawings

5.4.A. Before undertaking each part of Work, Contractor shall carefully study and compare Contract Documents and check and verify pertinent figures shown in the Contract Documents and all applicable field measurements. Contractor shall be responsible for any errors that might have been avoided by such comparison. Figures shown on Drawings shall be followed; Contractor shall not scale measurements. Contractor shall promptly report to Owner, in writing, any conflict, error, ambiguity or discrepancy that Contractor may discover. Contractor shall obtain a written interpretation or clarification from Owner before proceeding with any Work affected thereby. Contractor shall provide Owner with a follow-up correspondence every ten Days until it receives a satisfactory interpretation or clarification.

5.5 Standards To Apply Where Specifications Are Not Furnished

5.5.A. The following general specifications shall apply wherever in the Specifications, or in any directions given by Owner in accordance with or supplementing Specifications, it is provided that Contractor shall furnish materials or manufactured articles or shall do Work for which no detailed specifications are shown. Materials or manufactured articles shall be of the best grade, in quality and workmanship, obtainable in the market from firms of established good reputation. If not ordinarily carried in stock, the materials or manufactured articles shall conform to industry standards for first-class materials or articles of the kind required, with due consideration of the use to which they are to be put. Work shall conform to the usual standards or codes, such as those cited in Section 01420 (References and Definitions), for first-class work of the kind required. Contractor shall specify in writing to Owner the materials to be used or Work to be performed under this paragraph 5.5 ten Business Days prior to furnishing such materials or performing such Work.

5.6 Deviation From Specifications And Drawings

5.6.A. Contractor shall perform Work in accordance with Drawings and Specifications. Contractor may deviate from Drawings or the dimensions given in the Drawings, and

may deviate from the Specifications, only upon Owner's advance written approval of the proposed deviation. If Work requires a submittal prior to commencement, then Contractor's performance of such Work prior to submittal being favorably reviewed shall be at Contractor's sole risk.

5.6.B. Owner may order that locations, lines and grades for Work vary from those shown on Drawings. Changes may be made in locations, lines or grades for Work under any item of Contract Documents. No payment in addition to unit price fixed in the Contract Documents for Work under respective items will be allowed on account of variations from Drawings in unit price items. In lump sum contracts, or where there are no unit price items covering Work affected by variations of locations, lines or grades, all changes in the Contract Documents will be made as set forth in Article 14 of this Document 00700.

5.7 Precedence Of Documents

5.7.A. In the case of discrepancy or ambiguity in the Contract Documents, the following order of precedence shall prevail:

1. Modifications in inverse chronological order (i.e., most recent first), and in the same order as specific portions they are modifying;
2. Document 00520 (Agreement), and terms and conditions referenced therein;
3. Document 00800 (Supplementary Conditions);
4. Document 00700 (General Conditions);
5. Division 1 Specifications;
6. Drawings and Division 2 through 16 Specifications;
7. Written numbers over figures, unless obviously incorrect;
8. Figured dimensions over scaled dimensions;
9. Large-scale Drawings over small-scale Drawings.

5.7.B. Any conflict between Drawings and Division 2 through 16 Specifications will be resolved in favor of the document of the latest date (i.e., the most recent document), and if the dates are the same or not determinable, then in favor of Specifications.

5.7.C. Any conflict between a bill or list of materials shown in the Contract Documents and the actual quantities required to complete Work required by Contract Documents, will be resolved in favor of the actual quantities.

5.7.D. In the event the Specifications include divisions above Division 16 (e.g., Division 17 and above), then such divisions shall be included within the Contract Documents unless identified otherwise.

5.8 Ownership And Use Of Drawings, Specifications And Contract Documents

5.8.A. Drawings, Specifications and other Contract Documents were prepared for use for Work of Contract Documents only. No part of Contract Documents shall be used for any other construction or for any other purpose except with the written consent of Owner. Any unauthorized use of Contract Documents is prohibited and at the sole liability of the user.

6. CONSTRUCTION BY OWNER OR BY SEPARATE CONTRACTORS

6.1 Owner may perform with its own forces, construction or operations related to the Project, or the Site during Contractor's operations. Owner may also award separate contracts in connection with other portions of the Project or other construction or

operations, on the Site or areas contiguous to the Site, under conditions similar to these Contract Documents, or may have utility owners perform other work. Contractor shall adjust its schedule and fully coordinate with and shall afford all other contractors, utility owners and Owner (if Owner is performing work with its own forces), proper and safe access to the Site, and reasonable opportunity for the installation and storage of their materials. Contractor shall ensure that the execution of its Work properly connects and coordinates with others' work, and shall cooperate with them to facilitate the progress of the Work.

7. OWNER'S REPRESENTATIVES AND AUTHORITIES

7.1 Owner's Representative(s)

7.1.A. Owner's Representative(s) will have limited authority to act on behalf of Owner as set forth in the Contract Documents. Except as otherwise provided in these Contract Documents or subsequently identified in writing by Owner, Owner will issue all communications to Contractor through Owner's Representative, and Contractor shall issue all communications to Owner through Owner's Representative in a written document delivered to Owner. Should any direct communications between Contractor and Owner's consultants, architects or engineers not identified in Article 2 of Document 00520 (Agreement) occur during field visits or by telephone, Contractor shall immediately confirm them in a written document copied to Owner.

7.2 Means And Methods Of Construction

7.2.A. Subject to those rights specifically reserved in the Contract Documents, Owner will not supervise, or direct, or have control over, or be responsible for, Contractor's means, methods, techniques, sequences or procedures of construction, or the safety precautions and programs incident thereto, or Contractor's failure to comply with laws and regulations applicable to the furnishing or performance of Work. Owner will not be responsible for Contractor's failure to perform or furnish the Work in accordance with Contract Documents.

8. CONTROL OF THE WORK

8.1 Supervision Of Work By Contractor

8.1.A. Contractor shall supervise, inspect, and direct Work competently and efficiently, devoting the attention and applying such personal skills and expertise as may be required and necessary to perform Work in accordance with Contract Documents. Contractor shall be solely responsible for and have control and charge of construction means, methods, techniques, sequences and procedures, safety precautions and programs in connection with the Work. Contractor shall be responsible to see that the completed Work complies accurately with Contract Documents.

8.1.B. Contractor shall keep on the Site at all times during Work progress a competent resident Superintendent, who shall not be replaced without Owner's express written consent. The Superintendent shall be Contractor's representative at the Site and shall have complete authority to act on behalf of Contractor. All communications to and from the Superintendent shall be as binding as if given to or by Contractor.

8.2 Observation Of Work By Owner

8.2.A. Work shall be performed under Owner's general observation and administration. Contractor shall comply with Owner's directions and instructions in accordance with the terms of Contract Documents, but nothing contained in these General Conditions shall be taken to relieve Contractor of any obligations or liabilities under the Contract Documents. Owner's failure to review or, upon review, failure to object to any aspect of Work reviewed, shall not be deemed a waiver or approval of any non-conforming aspect of Work.

8.2.B. Owner may engage an independent consultant or engineer (collectively for purposes of this paragraph 8.2, "Engineer") to assist in administering the Work. If so engaged, Engineer will advise and consult with Owner, but will have authority to act on behalf of Owner only to extent provided in the Contract Documents or as set forth in writing by Owner. Engineer will not be responsible for and will not have control or charge of construction means, methods, techniques, sequences or procedures, or for safety precautions and programs in connection with Work. Engineer will not be responsible for or have control over the acts or omissions of Contractor, Subcontractors or their agents or employees, or any other persons performing Work.

8.2.C. Engineer may review Contractor's Submittals, such as Shop Drawings, Product Data, and Samples, but only for conformance with design concept of Work and with information given in the Contract Documents.

8.2.D. Engineer may visit the Site at intervals appropriate to stage of construction to become familiar generally with the progress and quality of Work and to determine in general if Work is proceeding in accordance with Contract Documents. Based on its observations, Engineer may recommend to Owner that it disapprove or reject Work that Engineer believes to be Defective or will not produce a complete Project that conforms to Contract Documents or will prejudice the integrity of the design concept of the completed Project as a functioning whole as indicated by Contract Documents. Owner will also have authority to require special inspection or testing of Work, whether or not the Work is fabricated, installed or completed.

8.2.E. Engineer may conduct inspections to recommend to Owner the dates that Contractor has achieved Substantial Completion and Final Acceptance, and will receive and forward to Owner for review written warranties and related documents required by Contract Documents.

8.3 Access To Work

8.3.A. During performance of Work, Owner and its agents, consultants, and employees may at any time enter upon Work, shops or studios where any part of the Work may be in preparation, or factories where any materials for use in Work are being or are to be manufactured, and Contractor shall provide proper and safe facilities for this purpose, and shall make arrangements with manufacturers to facilitate inspection of their processes and products to such extent as Owner's interests may require. Other contractors performing work for Owner may also enter upon Work for all purposes required by their respective contracts. Subject to the rights reserved in the Contract Documents, Contractor shall have sole care, custody, and control of the Site and its Work areas.

8.4 Existing Utilities Shown Or Indicated In Contract Documents

8.4.A. Drawings or Specifications may indicate above- and below-grade structures, drainage lines, storm drains, sewers, water, gas, electrical, chemical, hot water, and other similar items and utilities, and additional information may be on file at the Common Ground Alliance, telephone 811. Contractor shall locate these known existing installations before proceeding with trenching or other operations that may cause damage, shall maintain them in service where appropriate, and shall repair any damage to them caused by the Work, at no increase in Contract Sum. Additional utilities whose locations are unknown to Owner are suspected to exist. Contractor shall be alert to their existence; if they are encountered, Contractor shall immediately report to Owner for disposition of the same. In addition to reporting if any utility is damaged, Contractor shall take appropriate action as provided in this Document 00700. Additional compensation or extension of time on account of utilities not shown or otherwise brought to Contractor's attention, including reasonable action taken to protect or repair damage, shall be determined as provided in this Document 00700.

8.4.B. At no additional cost to Owner, Contractor shall incorporate into the Work main or trunk line utilities identified in the Contract Documents and other utilities or underground structures known or reasonably discernible and that will remain in service, including reasonable adjustments to the design location (including minor relocations) of the existing or new installations. Contractor shall take immediate action to restore any in service installations damaged by Contractor's operations. Should Owner determine that Contractor has not responded in a timely manner or not diligently pursued completion of the Work, Owner may restore service and deduct the costs of such action by Owner from the amounts due under the Contract.

8.4.C. Consistent with Government Code Section 4215, as between Owner and Contractor, Owner will be responsible for the timely removal, relocation, or protection of existing main or trunk line utility facilities located on the Site only if such utilities are not identified in the Contract Documents or information made available for bidding. Owner will compensate for the cost of locating and repairing damage not due to Contractor's failure to exercise reasonable care, removing and relocating such main or trunk line utility facilities not indicated in the Contract Documents or information made available for bidding with reasonable accuracy, and equipment on the Project necessarily idled during such Work.

8.4.D. Prior to performing Work at the Site, Contractor shall lay out the locations of known underground utilities that are to remain in service and other significant known underground installations. At no additional cost to Owner, prior to commencing other Work in proximity to such known underground utilities or installations that can be readily inferred from adjacent surface improvements, Contractor shall further locate, by carefully excavating with small equipment, potholing and principally by hand, such utilities or installations that are to remain and that are subject to damage.

8.4.E. Nothing in this Document 00700 shall be deemed to require Owner to indicate the presence of existing service laterals or appurtenances whenever the presence of such utilities on the Site can be inferred by Contractor from the presence of an underground transmission main or other visible facilities, such as buildings, new asphalt, meters and junction boxes, on or adjacent to the Site. Contractor shall immediately secure all available information and notify Owner and utility, in writing, of its discovery, while

performing Work under the Contract Documents, of any utility facilities not identified in the Drawings and Specifications.

8.5 Protection Of Underground Facilities When Digging Trenches Or During Excavation

8.5.A. Before commencing Work of digging trenches or excavation, Contractor shall review all information available regarding subsurface conditions, including but not limited to information supplied for bidding purposes, and subject to the terms and conditions of these documents. Contractor shall also comply with Government Code Sections 4216 to 4216.9, and in particular Section 4216.2 which provides, in part:

> Except in an emergency, every person planning to conduct any excavation shall contact the appropriate regional notification center at least two working days, but no more than 14 calendar days, prior to commencing that excavation, if the excavation will be conducted in an area which is known, or reasonably should be known, to contain subsurface installations other than the underground facilities owned or operated by the excavator, and, if practical, the excavator shall delineate with white paint or other suitable markings the area to be excavated. The regional notification center shall provide an inquiry identification number to the person who contacts the center and shall notify any member, if known, who has a subsurface installation in the area of the proposed excavation.

8.5.B. Contractor shall contact Common Ground Alliance, telephone 811, and schedule the Work to allow ample time for the center to notify its members and, if necessary, for any member to field locate and mark its facilities. Contractor is charged with knowledge of all subsurface conditions reflected in 811 records. Prior to commencing excavation or trenching Work, Contractor shall provide Owner with copies of all 811 records secured by Contractor. Contractor shall advise Owner of any conflict between information provided for bidding purposes, the Drawings and Specifications, and that provided by 811 records. Contractor's excavation shall be subject to and comply with the Contract Documents.

8.5.C. If an Underground Facility is uncovered or revealed at or contiguous to the Site which was not shown or indicated in the materials supplied by Owner for bidding or in information on file at 811 or otherwise reasonably available to Contractor, then Contractor shall, promptly after becoming aware thereof and before further disturbing conditions affected thereby (and in no event later than seven Days), and prior to performing any Work in connection therewith (except in an emergency as required by Article 16 of this Document 00700), identify the owner of such Underground Facility and give written notice to that owner and to Owner. During such time, Contractor shall be responsible for the safety and protection of such Underground Facility.

8.5.D. Contractor shall be allowed an increase in the Contract Sum or an extension of the Contract Time, or both, to the extent that they are attributable to the existence of any Underground Facility that is owned and was built by Owner only where the Underground Facility:

1. Was not shown or indicated in the Contract Documents or in the information supplied for bidding purposes or in information on file at 811; and
2. Contractor did not know of it; and

3. Contractor could not reasonably have been expected to be aware of it or to have anticipated it from the information available. (For example, if surface conditions such as pavement repairs, valve covers, or other markings, indicate the presence of an Underground Facility, then an increase in the Contract Sum or an extension of the Contract Time will not be due, even if the Underground Facility was not indicated in the Contract Documents, in the information supplied to Contractor for bidding purposes, in information on file at 811, or otherwise reasonably available to Contractor.)

8.5.E. Contractor shall bear the risk that Underground Facilities not owned or built by Owner may differ in nature or locations shown in information made available by Owner for bidding purposes, in information on file at 811, or otherwise reasonably available to Contractor. Underground Facilities are inherent in construction involving digging of trenches or other excavations on Owner's Project, and Contractor is to apply its skill and industry to verify the information available.

8.5.F. The cost of all of the following will be included in the Contract Sum and Contractor shall have full responsibility for (a) reviewing and checking all available information and data including, but not limited to, information made available for bidding and information on file at 811; (b) locating all Underground Facilities shown or indicated in the Contract Documents, available information, or indicated by visual observation including, but not limited to, and by way of example only, engaging qualified locating services and all necessary backhoeing and potholing; (c) coordinating the Work with the owners of such Underground Facilities during construction; and (d) the safety and protection of all such Underground Facilities and repairing any damage thereto resulting from the Work.

9. WARRANTY, GUARANTY, AND INSPECTION OF WORK

9.1 Warranty And Guaranty

9.1.A. General Representations and Warranties: Contractor represents and warrants that it is and will be at all times fully qualified and capable of performing every Phase of the Work and to complete Work in accordance with the terms of Contract Documents. Contractor warrants that all construction services shall be performed in accordance with generally accepted professional standards of good and sound construction practices and all requirements of Contract Documents. Contractor warrants that Work, including but not limited to each item of materials and equipment incorporated therein, shall be new, of suitable grade of its respective kind for its intended use, and free from defects in design, engineering, materials, construction and workmanship. Contractor warrants that Work shall conform in all respects with all applicable requirements of federal, state and local laws, applicable construction codes and standards, licenses, and permits, Drawings and Specifications and all descriptions set forth therein, and all other requirements of Contract Documents. Contractor shall not be responsible, however, for the negligence of others in the specification of specific equipment, materials, design parameters and means or methods of construction where that is specifically shown and expressly required by Contract Documents.

9.1.B. Environmental and Toxics Warranty: The covenants, warranties and representations contained in this paragraph 9.1.B are effective continuously during Contractor's Work on the Project and following cessation of labor for any reason including, but not

limited to, Project completion. Except as expressly shown in the Contract Documents, Contractor covenants, warrants and represents to Owner that:

1. To Contractor's knowledge after due inquiry, no lead or Asbestos-containing materials were installed or discovered in the Project at any time during Contractor's construction thereof. If any lead or Asbestos-containing materials were discovered, Contractor made immediate written disclosure to Owner.
2. To Contractor's knowledge after due inquiry, no electrical transformers, light fixtures with ballasts or other equipment containing PCBs were installed or discovered on the Project at any time during Contractor's construction thereof. If any such materials were discovered, Contractor made immediate written disclosure to Owner.
3. To Contractor's knowledge after due inquiry, no storage tanks for gasoline or any other toxic substance were installed or discovered on the Project at any time during Contractor's construction thereof. If any such materials were discovered, Contractor made immediate written disclosure to Owner.
4. Contractor's operations concerning the Project are and were not in violation of any applicable environmental federal, state, or local statute, law or regulation dealing with hazardous materials substances or toxic substances and no notice from any governmental body has been served upon Contractor claiming any violation of any such law, ordinance, code or regulation, or requiring or calling attention to the need for any Work, repairs, construction, alteration, or installation on or in connection with the Project in order to comply with any such laws, ordinances, codes, or regulations, with which Contractor has not complied. If there are any such notices with which Contractor has complied, Contractor shall provide Owner with copies thereof.

9.2 Inspection Of Work

9.2.A. All materials, equipment, and workmanship used in Work shall be subject to inspection and testing at all times during construction and/or manufacture in accordance with the terms of Contract Documents. Work and materials, and manufacture and preparation of materials, from beginning of construction until Final Completion and acceptance of Work, shall be subject to inspection and rejection by Owner, its agents, representatives or independent contractors retained by Owner to perform inspection services, or governmental agencies with jurisdictional interests. Contractor shall provide them proper and safe conditions for such access and advise them of Contractor's Site safety procedures and program so that they may comply therewith as applicable. Upon request or where specified, Owner shall be afforded access for inspection at the source of supply, manufacture or assembly of any item of material or equipment, with reasonable accommodations supplied for making such inspections.

9.2.B. Contractor shall furnish, in such quantities and sizes as may be required for proper examination and tests, Samples or test specimens of all materials to be used or offered for use in connection with Work. Contractor shall prepare Samples or test specimens at its expense and furnish them to Owner. Contractor shall submit all Samples in ample time to enable Owner to make any necessary tests, examinations, or analyses before the time it is desired to incorporate the material into the Work.

9.2.C. Contractor shall give Owner timely notice of readiness of Work for all required inspections, tests or approvals, and shall cooperate with inspection and testing personnel to facilitate required inspections or tests.

9.2.D. If applicable laws or regulations of any public body having jurisdiction require any Work (or part thereof) specifically to be inspected, tested or approved by an employee or other representative of such public body, Contractor shall assume full responsibility for arranging and obtaining such inspections, tests or approvals, and furnish Owner with the required certificates of inspection, or approval. Owner will pay the cost of initial testing and Contractor shall pay all costs in connection with any follow-up or additional testing. Contractor shall also be responsible for arranging and obtaining and shall pay all costs in connection with any inspections, tests or approvals required for the acceptance of materials or equipment to be incorporated in the Work, or of materials, mix designs, or equipment submitted for approval prior to Contractor's purchase thereof for incorporation in the Work.

9.2.E. If Contractor covers any Work, or the work of others, prior to any required inspection, test or approval without written approval of Owner, Contractor shall uncover the Work at Owner's request. Contractor shall bear the expense of uncovering Work and replacing Work.

9.2.F. In any case where Contractor covers Work contrary to Owner's request, Contractor shall uncover Work for Owner's observation or inspection at Owner's request. Contractor shall bear the cost of uncovering Work.

9.2.G. Whenever required by Owner, Contractor shall furnish tools, labor and materials necessary to make examination of Work that may be completed or in progress, even to extent of uncovering or taking down portions of finished Work. Should Work be found unsatisfactory, cost of making examination and of reconstruction shall be borne by Contractor. If Work is found to be satisfactory, Owner, in manner herein prescribed for paying for alterations, Modifications, and extra Work, except as otherwise herein specified, will pay for examination.

9.2.H. Inspection of the Work by or on behalf of Owner, or Owner's failure to do so, shall not under any circumstances be deemed a waiver or approval of any non-conforming aspect of the Work. Contractor shall have an absolute duty, in the absence of a written Change Order signed by Owner, to perform Work in conformance with the Contract Documents and to correct Defective Work immediately upon Contractor's knowledge.

9.2.I. Any inspection, evaluation, or test performed by or on behalf of Owner relating to the Work is solely for the benefit of Owner, and shall not be relied upon by Contractor. Contractor shall not be relieved of the obligation to perform Work in accordance with the Contract Documents, nor relieved of any guaranty, warranty, or other obligation, as a result of any inspections, evaluations, or tests performed by Owner, whether or not such inspections, evaluations, or tests are permitted or required under the Contract Documents. Contractor shall be solely responsible for testing and inspecting Work already performed to determine whether such Work is in proper condition to receive later Work.

9.3 Correction Of Defective Work

9.3.A. If Contractor fails to supply sufficient skilled workers, suitable materials or equipment, or to furnish or perform the Work in such a way that the completed Work will conform to Contract Documents, Owner may order Contractor to replace any such Defective

Work, or stop any portion of Work to permit Owner (at Contractor's expense) to replace such Defective Work. These Owner rights are entirely discretionary on the part of the Owner, and shall not give rise to any duty on the part of Owner to exercise the rights for the benefit of Contractor or any other party.

9.3.B. Owner may direct Contractor to correct any Defective Work or remove it from the Site and replace it with Work that is not Defective and satisfactorily correct or remove and replace any damage to other Work or the work of others resulting from the correction or removal. Contractor shall be responsible for any and all claims, costs, losses and damages caused by or resulting from such correction or removal. A Change Order will be issued incorporating the necessary revisions in the Contract Documents with respect to the Work and the Contract Sum. If the parties are unable to agree to the amount of an appropriate decrease in the Contract Sum, Owner may decide the proper amount or, in its discretion may elect to leave the Contract Sum unchanged and deduct from moneys due Contractor, all such claims, costs, losses and damages caused by or resulting from the correction or removal. If Contractor disagrees with Owner's calculations, it may make a claim as provided in Article 12 of this Document 00700. Owner's rights under this paragraph 9.3.B shall be in addition to any other rights it may have under the Contract Documents or by law.

9.3.C. Correction Period: If within one year after the date of Final Acceptance, or such longer period of time as may be prescribed by laws or regulations, or by the terms of Contract Documents, any Work (completed or incomplete) is found to be Defective, Contractor shall promptly, without cost to Owner and in accordance with Owner's written instructions, correct such Defective Work. Contractor shall remove any Defective Work rejected by Owner and replace it with Work that is not Defective, and satisfactorily correct or remove and replace any damage to other Work or the work of others resulting therefrom. If Contractor fails to promptly comply with the terms of such instructions, or in an emergency where delay would cause serious risk of loss or damage, Owner may have the Defective Work corrected or the rejected Work removed and replaced. Contractor shall pay for all claims, costs, losses and damages caused by or resulting from such removal and replacement. Where Contractor fails to correct Defective Work, or defects are discovered outside the correction period, Owner shall have all rights and remedies granted by law.

9.3.D. In special circumstances where a part of the Work is occupied or a particular item of equipment is placed in continuous service before Final Acceptance of all the Work, the correction period for that part of Work or that item may start to run from an earlier date if so provided by Change Order.

9.3.E. Where Defective Work or rejected Work (and damage to other Work resulting therefrom) has been corrected, removed, or replaced under this provision after the commencement of the correction period, the correction period hereunder with respect to such Work shall be extended for an additional period of one year, or such longer period of time as may be prescribed by laws, regulations, or by the terms of the Contract Documents, after such correction or removal and replacement has been satisfactorily completed.

9.4 Acceptance And Correction Of Defective Work By Owner

9.4.A. Owner may accept Defective Work. Contractor shall pay all claims, costs, losses and damages attributable to Owner's evaluation of and determination to accept such

Defective Work. If Owner accepts any Defective Work prior to final payment, a Change Order will be issued incorporating the necessary revisions in the Contract Documents with respect to the Work and the Contract Sum. If the parties are unable to agree to the amount of an appropriate decrease in the Contract Sum, Owner may deduct from moneys due Contractor, all claims, costs, losses, damages, expenses and liabilities attributable to the Defective Work. If Contractor disagrees with Owner's calculations, Contractor may make a claim as provided in Article 12 of this Document 00700. If Owner accepts any Defective Work after final payment, Contractor shall pay to Owner, an appropriate amount as determined by Owner.

9.4.B. Owner may correct and remedy deficiency if, after five Days' written notice to Contractor, Contractor fails to correct Defective Work or to remove and replace rejected Work in accordance with paragraph 9.3.B of this Document 00700; or provide a plan for correction of Defective Work acceptable to Owner; or perform Work in accordance with Contract Documents. In connection with such corrective and remedial action, Owner may exclude Contractor from all or part of the Site; take possession of all or part of Work and suspend Contractor's Work related thereto; take possession of all or part of Contractor's tools, appliances, construction equipment and machinery at the Site; and incorporate in Work any materials and equipment stored at the Site or for which Owner has paid Contractor but which are stored elsewhere. Contractor shall allow Owner, its representatives, agents, employees, and other contractors and Engineer's consultants access to the Site to enable Owner to exercise the rights and remedies under this paragraph 9.4.B. Contractor shall be responsible for all claims, costs, losses, damages, expenses and liabilities incurred or sustained by Owner in exercising such rights and remedies. A Change Order will be issued incorporating the necessary revisions in the Contract Documents with respect to Work and the Contract Sum. If the parties are unable to agree to the amount of an appropriate decrease in the Contract Sum, Owner may deduct from moneys due Contractor, all claims, costs, losses and damages caused by or resulting from the correction or removal. If Contractor disagrees with Owner's calculations, Contractor may make a claim as provided in Article 12 of this Document 00700.

9.5 Rights Upon Inspection, Correction, Or Acceptance

9.5.A. Contractor shall not be allowed an extension of Contract Time because of any delay in the performance of Work attributable to the exercise by Owner of its rights and remedies under this Article 9. Where Owner exercises its rights under this Article 9, it retains and may still exercise all other rights it has by law or under the Contract Documents including, but not limited to, the right to terminate Contractor's right to proceed with the Work under the Contract Documents for cause and/or make a claim or back charge where a Change Order cannot be agreed upon.

9.5.B. Inspection by Owner or its authorized agents or representatives shall not relieve Contractor of its obligation to have furnished material and workmanship in accordance with Contract Documents. Payment for Work completed through periodic progress payments, final payment or otherwise shall not operate to waive Owner's right to require full compliance with Contract Documents and shall in no way be deemed as acceptance of any Defective Work paid therefor. Contractor's obligation to complete the Work in accordance with Contract Documents shall be absolute, unless Owner agrees otherwise in writing.

9.5.C. Neither acceptance of the whole or any part of Work by Owner nor any verbal statements on behalf of Owner or its authorized agents or representatives shall operate as a waiver or Modification of any provision of the Contract Documents, or of any power reserved to Owner herein nor any right to damages provided in the Contract Documents.

9.6 Proof Of Compliance Of Contract Provisions

9.6.A. In order that Owner may determine whether Contractor has complied or is complying with requirements of Contract Documents not readily enforceable through inspection and tests of Work and materials, Contractor shall at any time, when requested, submit to Owner properly authenticated documents or other satisfactory proofs of compliance with all applicable requirements.

10. CONTRACTOR'S ORGANIZATION AND EQUIPMENT

10.1 Contractor's Legal Address

10.1.A. Address and facsimile number given in Contractor's Bid are hereby designated as Contractor's legal address and facsimile number. Contractor may change its legal address and facsimile number by notice in writing, delivered to Owner, which in conspicuous language advises Owner of a change in legal address or facsimile number, and which Owner accepts in writing. Delivery to Contractor's legal address or depositing in any post office or post office box regularly maintained by the United States Postal Service, in a wrapper with postage affixed, directed to Contractor at legal address, or of any drawings, notice, letter or other communication, shall be deemed legal and sufficient service thereof upon Contractor. Facsimile to Contractor's designated facsimile number of any letter, memorandum, or other communication on standard or legal sized paper, with proof of facsimile transmission, shall be deemed legal and sufficient service thereof upon Contractor.

10.2 Contractor's Superintendents Or Forepersons

10.2.A. Contractor shall at all times be represented on Site by one or more superintendents or forepersons authorized and competent to receive and carry out any instructions that Owner may give, and shall be liable for faithful observance of instructions delivered to Contractor or to authorized representative or representatives on Site.

10.3 Proficiency In English

10.3.A. Supervisors, security guards, safety personnel and employees who have unescorted access to the Site shall possess proficiency in the English language in order to understand, receive and carry out oral and written communications or instructions relating to their job functions, including safety and security requirements.

10.4 Contractor's And Subcontractors' Employees

10.4.A. Contractor shall employ, and shall permit its Subcontractors to employ, only competent and skillful personnel to do Work. If Owner notifies Contractor that any of its employees, or any of its Subcontractors' employees on Work is incompetent, unfaithful, disorderly or profane, or fails to observe customary standards of conduct or refuses to carry out any provision of the Contract Documents, or uses threatening or abusive language to any person on Work representing Owner, or violates sanitary rules, or is otherwise unsatisfactory, and if Owner requests that such person be

discharged from Work, then Contractor or its Subcontractor shall immediately discharge such person from Work and the discharged person shall not be re-employed on the Work except with consent of Owner.

10.5 Contractor To Supply Sufficient Workers And Materials

10.5.A. Unless otherwise required by Owner under the terms of Contract Documents, Contractor shall at all times keep on the Site materials and employ qualified workers sufficient to prosecute Work at a rate and in a sequence and manner necessary to complete Work within the Contract Time. This obligation shall remain in full force and effect notwithstanding disputes or claims of any type.

10.5.B. At any time during progress of Work should Contractor directly or indirectly (through Subcontractors) refuse, neglect, or be unable to supply sufficient materials or employ qualified workers to prosecute the Work as required, then Owner may require Contractor to accelerate the Work and/or furnish additional qualified workers or materials as Owner may consider necessary, at no cost to Owner. If Contractor does not comply with the notice within three Business Days of date of service thereof, Owner shall have the right (but not a duty) to provide materials and qualified workers to finish the Work or any affected portion of Work, as Owner may elect. Owner may, at its discretion, exclude Contractor from the Site, or portions of the Site or separate Work elements during the time period that Owner exercises this right. Owner will deduct from moneys due or which may thereafter become due under the Contract Documents, the sums necessary to meet expenses thereby incurred and paid to persons supplying materials and doing Work. Owner will deduct from funds or appropriations set aside for purposes of Contract Documents the amount of such payments and charge them to Contractor as if paid to Contractor. Contractor shall remain liable for resulting delay, including liquidated damages and indemnification of Owner from claims of others.

10.5.C. Exercise by Owner of the rights conferred upon Owner in paragraph 10.5.B of this Document 00700, is entirely discretionary on the part of Owner. Owner shall have no duty or obligation to exercise the rights referred to in paragraph 10.5.B of this Document 00700 and its failure to exercise such rights shall not be deemed an approval of existing Work progress or a waiver or limitation of Owner's right to exercise such rights in other concurrent or future similar circumstances. The rights conferred upon Owner under paragraph 10.5.B of this Document 00700 are cumulative to Owner's other rights under any provision of the Contract Documents.

10.6 Contractor's Use Of The Site

10.6.A. Contractor shall not make any arrangements with any person to permit occupancy or use of any land, structure or building within the limits of the Work, for any purpose whatsoever, either with or without compensation, in conflict with any agreement between Owner and any owner, former owner or tenant of such land, structure or buildings. Contractor may not occupy Owner-owned property outside the limit of the Work as indicated on the Drawings unless it obtains prior approval from Owner.

10.7 Temporary Facilities

10.7.A. Unless expressly provided otherwise in the Contract Documents, Contractor shall provide all temporary electricity, water, telephone, sanitary facilities, barriers and

enclosures, tree and plant protection, and any other necessary services required for construction, testing or completion of the Work.

10.8 Apprenticeship Program

10.8.A. Contractor and Subcontractors shall comply with the requirements of California Labor Code Sections 1776, 1777.5, and 1777.6 concerning the employment of apprentices by Contractor or Subcontractors. Willful failure to comply may result in penalties, including loss of the right to Bid on or receive public works contracts.

10.8.B. Section 1777.5, as amended, requires a Contractor or Subcontractor employing tradespersons in any apprenticeable occupation to apply to the joint apprenticeship committee nearest the site of a public works project and which administers the apprenticeship program in that trade for a certification of approval. The certificate shall also fix the ratio of apprentices to journeypersons that will be used in performance of the Contract. The ratio of work performed by apprentices to journeypersons in such cases shall not be less than one *hour* of apprentice's work for every five *hours* of labor performed by journeypersons (the minimum ratio for the land surveyor classification shall not be less than one apprentice for each five journeypersons), except:

1. When unemployment for the previous three-month period in the area exceeds an average of 15 percent;
2. When the number of apprentices in training in the area exceeds a ratio of one to five;
3. When a trade can show that it is replacing at least 1/30 of its membership through apprenticeship training on an annual basis state-wide or locally; or
4. Assignment of an apprentice to any work performed under a public works contract would create a condition which would jeopardize his or her life or the life, safety, or property of fellow employees or the public at large or if the specific task to which the apprentice is to be assigned is of such a nature that training cannot be provided by a journeyperson.

10.8.C. Contractor is required to make contributions to funds established for administration of apprenticeship programs if Contractor employs registered apprentices or journeypersons in any apprenticeable trade on such contracts and if other contractors on the public works site are making such contributions.

10.8.D. Information relative to apprenticeship standards, wage schedules, and other requirements may be obtained from the Director of the California Department of Industrial Relations, or from the Division of Apprenticeship Standards and its branch offices.

11. PROSECUTION AND PROGRESS OF THE WORK

11.1 Schedules And Examinations Of Contract Documents

11.1.A. Contractor shall submit schedules, reports, and Submittals in the appropriate quantity and within the required time, arrange conferences and meetings and proceed with the Work in accordance with Contract Documents, including Sections 01315 (Project Meetings), and 01330 (Submittal Procedures).

11.1.B. Contractor shall submit to Owner for review and discussion at the initial Schedule Review Meeting described in Section 01315 (Project Meetings):

1. Within 21 Days after issuance of Notice to Proceed, a preliminary schedule of Submittals that shall list each required Submittal and the times for submitting, reviewing and processing such Submittal. If no such schedule is agreed upon, then all Submittals shall be completed and submitted within 21 Days after the Notice of Award.
2. Within 21 Days after issuance of Notice to Proceed, a preliminary Schedule of Values, if required, for all the Work which shall conform to Section 01200 (Price and Payment Procedures).

11.1.C. Unless otherwise provided in the Contract Documents, at least 15 Days before submission of the first Application for Payment, a conference attended by Contractor, Owner, and others as appropriate, will be held to review for acceptability the schedules submitted in accordance with paragraph 11.1.B of this Document 00700. Contractor shall have an additional seven Days to make corrections and adjustments and to complete and resubmit the schedules. No progress payment shall be due or owing to Contractor until the schedules are submitted to and acceptable to Owner or Engineer or both as meeting the requirements of the Contract Documents. Owner's acceptance of Contractor's schedules will not create any duty of care or impose on Owner any responsibility for the sequencing, scheduling or progress of Work nor will it interfere with or relieve Contractor from Contractor's full responsibility therefor.

11.2 Cost Data

11.2.A. Contractor shall maintain full and correct information as to the number of workers employed in connection with each subdivision of Work, the classification and rate of pay of each worker in form of certified payrolls, the cost to Contractor of each class of materials, tools and appliances used by Contractor in Work, and the amount of each class of materials used in each subdivision of Work.

11.2.B. Owner shall have the right to audit and copy Contractor's books and records of any type, nature or description relating to the Project (including but not limited to financial records reflecting in any way costs claimed on the Project), and to inspect the Site, including Contractor's trailer, or other job Site office, and this requirement shall be contained in the subcontracts of Subcontractors working on Site. By way of example, Owner shall have the right to inspect and obtain copies of all Contract Documents, planning and design documents, Bid proposal and negotiation documents, cost records and job cost variance reports, design modification proposals, value engineering or other cost reduction proposals, revisions made to the original design, job Progress Reports, photographs, and as-built drawings maintained by Contractor. Owner and any other applicable governmental entity shall have the right to inspect all information and documents maintained under this paragraph 11.2 at any time during the Project and for a period of five years following Substantial Completion.

11.2.C. Contractor shall maintain in a safe place at the Site one record copy of all Drawings, Specifications, Addenda, Contract Modifications, Change Orders, Work Directives, Force Account orders, and written interpretations and clarifications in good order and annotated to show all changes made during construction. These Project Record Documents, together with all approved Samples and a counterpart of all approved Shop Drawings, shall be maintained and available to Owner for reference. Upon completion of the Work, Contractor shall deliver to Owner, the Project Record Documents.

12. CLAIMS BY CONTRACTOR

12.1 Obligation to File Claims for Disputed Work

12.1.A. Should it appear to Contractor that the Work to be performed or any of the matters relative to the Contract Documents are not satisfactorily detailed or explained therein, or should any clarification, determination, action or inaction by Owner or Engineer, or any other event, in the opinion of Contractor, exceed the requirements of or not comply with Contract Documents in any way, or should any questions arise as to the meaning or intent of the Contract Documents, or should any dispute arise regarding the true value of any work performed, work omitted, extra work that the Contractor may be required to perform, time extensions, payment to the Contractor during performance of this Contract, performance of the Contract, and/or compliance with Contract procedures, or should Contractor otherwise seek extra time or compensation FOR ANY REASON WHATSOEVER, then Contractor shall first follow procedures set forth in the Contract (including but not limited to other Articles of this Document 00700 and Section 01250 [Modification Procedures]). If a dispute remains, then Contractor shall give written notice to Owner that expressly invokes this Article 12. Owner shall decide the issue in writing and Owner's written decision shall be final and conclusive. If Contractor disagrees with Owner's decision, or if Contractor contends that Owner failed to provide a decision timely, then Contractor's SOLE AND EXCLUSIVE REMEDY is to file a written claim setting forth Contractor's position as required herein.

12.2 Form and Contents of Claim

12.2.A. Contractor's written claim must identify itself as a "Claim" under this Article 12 and must include the following: (1) a narrative of pertinent events; (2) citation to Contract provisions; (3) theory of entitlement; (4) complete pricing of all cost impacts; (5) a critical path analysis of all time delays that shows actual time impact on the critical path; (6) documentation supporting items 1 through 5; and (7) a verification under penalty of perjury of the claim's accuracy. The Claim shall be submitted to Owner within thirty (30) calendar Days of receiving Owner's written decision, or the date Contractor contends such decision was due, and shall be priced like a Change Order according to Section 01250 (Modification Procedures) herein, and must be updated monthly as to cost and entitlement if a continuing Claim. Routine Contract materials, for example, correspondence, RFIs, Change Order requests, or payment requests shall not constitute a Claim. Contractor shall bear all costs incurred in the preparation and submission of a Claim.

12.2.B. Upon receipt of Contractor's formal claim including all arguments, justifications, cost or estimates, schedule analysis, and documentation supporting its position as required herein, Owner or its designee will review the issue and render a final determination.

12.2.C. Claims shall be calculated in the same manner as Change Orders per Section 01250 (Modification Procedures). EXCEPT WHERE PROVIDED BY LAW, OR ELSEWHERE IN THESE CONTRACT DOCUMENTS (IF APPLICABLE), OWNER SHALL NOT BE LIABLE FOR SPECIAL OR CONSEQUENTIAL DAMAGES, AND CONTRACTOR SHALL NOT INCLUDE THEM IN ITS CLAIMS. CONTRACTOR SHALL BE LIMITED IN ITS RECOVERY ON CLAIMS TO THE CHANGE ORDER CALCULATIONS SET FORTH IN SECTION 01250 (MODIFICATION PROCEDURES).

12.2.D. After their submission, Claims $375,000 or less shall also be subject to the Local Agency Disputes Act.

12.3 Administration During/After Claim Submission

12.3.A. Owner may in its discretion conduct an administrative hearing on Contractor's claim, in which case Contractor shall appear, participate, answer questions and inquiries, and present any further evidence or analysis requested by Owner to evaluate and decide Contractor's Claim. Notwithstanding and pending the resolution of any Claim or dispute, Contractor shall diligently prosecute the disputed Work to Final Completion in accordance with Owner's determination.

12.4 Compliance

12.4.A. The provisions of this Article 12 constitute a non-judicial claim settlement procedure, and also step one of a two-step Claim presentment procedure by agreement under Section 930.2 of the California Government Code, that shall survive termination, breach or completion of the Contract Documents. Contractor shall bear all costs incurred in the preparation and submission of a Claim. Pursuant to Government Code Section 930.2, the one-year period in Government Code Section 911.2 to file a Government Code Section 910 Claim (step two) shall be reduced to 150 days. Any Section 910 Claim shall be presented in accordance with the Government Code and shall affirmatively indicate Contractor's prior compliance with the claims procedure herein and all previous dispositions under paragraph 12.2.B above.

12.4.B. Failure to submit and administer claims as required in Article 12 shall waive Contractor's right to Claim on any specific issues not included in a timely submitted claim. Claim(s) or issue(s) not raised in a timely protest and timely Claim submitted under this Article 12 may not be asserted in any subsequent litigation, Government Code Section 910 Claim, or legal action. Owner shall not be deemed to waive any provision under this Article 12, if at Owner's sole discretion, a Claim is administered in a manner not in accord with this Article 12.

13. LEGAL AND MISCELLANEOUS

13.1 Laws And Regulations

13.1.A. Contractor shall keep fully informed of and shall comply with all laws, ordinances, regulations and orders of any properly constituted authority affecting the Contract Documents, Work and persons connected with Work, and shall protect and indemnify Owner and its officers, employees, consultants and agents against any claim or liability, including attorney's fees, arising from or based on violation of law, ordinance, regulation or order, whether by Contractor or by Subcontractors, employees or agents. Authorized persons may at any time enter upon any part of Work to ascertain compliance of all applicable laws, ordinances, regulations and orders.

13.1.B. Whenever Drawings and Specifications require larger sizes or higher standards than are required by any applicable law, ordinance, regulation or order, Drawings and Specifications shall govern. Whenever Drawings and Specifications require something that will violate such laws, ordinances, regulations or orders, then such laws, ordinances, regulations or orders shall govern.

13.2 Permits And Taxes

13.2.A. Contractor shall procure all permits and licenses applicable to the Work (including environmental matters to the extent applicable); pay all charges and fees, including fees for street opening permits; comply with, implement and acknowledge effectiveness of all permits; initiate and cooperate in securing all required notifications or approvals therefore; and give all notices necessary and incident to due and lawful prosecution of Work, unless otherwise provided herein. Owner will pay applicable building permits, school, sanitation and water fees for the completed construction. Contractor shall pay all sales and/or use taxes levied on materials, supplies, or equipment purchased and used on or incorporated into Work, and all other taxes properly assessed against equipment or other property used in connection with Work, without any increase in the Contract Sum. Contractor shall make necessary arrangements with proper authorities having jurisdiction over roads, streets, pipelines, navigable waterways, railroads, and other works in advance of operations, even where Owner may have already obtained permits for the Work.

13.3 Responsibility Of Contractor And Indemnification

13.3.A. Owner and each of its officers, employees, consultants and agents including, but not limited to, the Board, Engineer and each Owner's Representative, shall not be liable or accountable in any manner for loss or damage that may happen to any part of the Work; loss or damage to materials or other things used or employed in performing the Work; injury, sickness, disease, or death of any person; or damage to property resulting from any cause whatsoever except their sole negligence, willful misconduct or active negligence, attributable to performance or character of the Work, and Contractor releases all of the foregoing persons and entities from any and all such claims.

13.3.B. To the furthest extent permitted by law (including without limitation California Civil Code Section 2782), Contractor shall assume defense of, and indemnify and hold harmless, Owner and each of its officers, employees, consultants and agents, including but not limited to the Board, Engineer and each Owner's Representative, from claims, suits, actions, losses and liability of every kind, nature and description, including but not limited to claims and fines of regulatory agencies and attorneys' fees and consultants' fees, directly or indirectly arising out of, connected with or resulting from performance of the Work, failure to perform the Work, or condition of the Work which is caused in whole or part by any act or omission of Contractor, Subcontractors, anyone directly or indirectly employed by any of them or anyone for whose acts any of them may be liable, regardless of whether it is caused in part by the negligence of Owner or by any person or entity required to be indemnified hereunder.

13.3.C. With respect to third-party claims against Contractor, Contractor waives any and all rights to any type of express or implied indemnity against Owner and each of its officers, employees, consultants and agents including, but not limited to Owner, the Board, Engineer and each Owner's Representative.

13.3.D. Approval or purchase of any insurance contracts or policies shall in no way relieve from liability nor limit the liability of Contractor, its Subcontractors of any tier, or the officers or agents of any of them.

13.3.E. To the furthest extent permitted by law (including, without limitation, Civil Code Section 2782), the indemnities, releases of liability and limitations of liability, claims

procedures, and limitations of remedy expressed throughout Contract Documents shall apply even in the event of breach of Contract, negligence (active or passive), fault or strict liability of the party(ies) indemnified, released, or limited in liability, and shall survive the termination, rescission, breach, abandonment, or completion of the Work or the terms of the Contract Documents. If Contractor fails to perform any of these defense or indemnity obligations, Owner may in its discretion back charge Contractor for Owner's costs and damages resulting therefrom and withhold such sums from progress payments or other Contract moneys which may become due.

13.3.F. The indemnities in the Contract Documents shall not apply to any indemnified party to the extent of its sole negligence or willful misconduct; nor shall they apply to Owner or other indemnified party to the extent of its active negligence.

13.4 Concealed Or Unknown Conditions

13.4.A. If either of the following conditions is encountered at Site when digging trenches or other excavations that extend deeper than four feet below the surface, Contractor shall give a written Notice of Differing Site Conditions to Owner promptly before conditions are disturbed, except in an emergency as required by paragraph 16.4 of this Document 00700, and in no event later than seven Days after first observance of:

1. Subsurface or Latent physical conditions which differ materially from those indicated in the Contract Documents; or
2. Unknown physical conditions of an unusual nature or which differ materially from those ordinarily encountered and generally recognized as inherent in Work of the character provided for in the Contract Documents.

13.4.B. In response to Contractor's Notice of Differing Site Conditions under paragraph 13.4.A of this Document 00700, Owner will investigate the identified conditions, and if they differ materially and cause increase or decrease in Contractor's cost of, or time required for, performance of any part of the Work, Owner will negotiate the appropriate Change Order following the procedures set forth in the Contract Documents. If Owner determines that physical conditions at the Site are not Latent or are not materially different from those indicated in Contract Documents or that no change in terms of the Contract Documents is justified, Owner will so notify Contractor in writing, stating reasons (with Contractor retaining its rights under Article 12 of this Document 00700.)

13.4.C. Contractor shall not be entitled to any adjustment in the Contract Sum or Contract Time regarding claimed Latent or materially different Site conditions (whether above or below grade) if Contractor knew or should have known of the existence of such conditions at the time Contractor submitted its Bid, failed to give proper notice, or relied upon information, conclusions, opinions or deductions of the kind that the Contract Documents preclude reliance upon.

13.5 Notice Of Hazardous Waste Or Materials Conditions

13.5.A. Contractor shall give a written Notice of Hazardous Materials Condition to Owner promptly, before any of the following conditions are disturbed (except in an emergency as required by paragraph 16.4 of this Document 00700), and in no event later than 24 hours after first observance of any:

1. Material that Contractor believes may be hazardous waste or hazardous material, as defined in Section 25117 of the Health and Safety Code (including, without limitation, Asbestos, lead, PCBs, petroleum and related hydrocarbons, and

radioactive material) that is required to be removed to a Class I, Class II, or Class III disposal site in accordance with provisions of existing law ("hazardous material"); or

2. Other material that may present an imminent substantial danger to persons or property exposed thereto in connection with Work at the Site ("other materials").

13.5.B. Except as otherwise provided in the Contract Documents or as provided by applicable law, Contractor shall not be required to give any notice for the disturbance or observation of any such hazardous materials or other materials where such matter is disturbed or observed as part of the scope of Work under the Contract Documents (such as hazardous waste or hazardous material investigation, remediation or disposal activities which are identified as the subject of Work under the Contract Documents), where Contractor complies with all requirements in the Contract Documents and applicable law respecting such materials.

13.5.C. Contractor's Notice of Hazardous Materials Condition shall indicate whether the hazardous materials or other materials were shown or indicated in the Contract Documents to be within the scope of Work, and whether the hazardous materials or other materials were brought to the Site by Contractor, its Subcontractors, suppliers, or anyone else for whom Contractor is responsible.

13.5.D. Contractor shall not be entitled to any adjustment in the Contract Sum or Contract Time regarding claimed hazardous waste or materials if:

1. Contractor knew of the existence of such hazardous materials or other materials at the time Contractor submitted its Bid; or
2. Contractor should have known of the existence of such hazardous material or other materials as a result of its having the responsibility to obtain additional or supplementary examinations, investigation, explorations, tests, studies, and data concerning the conditions at or contiguous to the Site prior to submitting its Bid; or
3. Contractor failed to give the written notice within the time required by paragraph 13.5.A of this Document 00700.

13.5.E. If Owner determines that conditions involve hazardous materials or other materials and that a change in Contract Document terms is justified, Owner will issue either a Request for Proposal or Construction Change Directive under the procedures described in the Contract Documents. If Owner determines that conditions do not involve hazardous materials or other materials or that no change in Contract Document terms is justified, Owner will notify Contractor in writing, stating the reasons for its determination.

13.5.F. In addition to the parties' other rights under paragraph 13.5.E of this Document 00700, if Contractor does not agree to resume Work based on a reasonable belief that it is unsafe, or does not agree to resume Work under special conditions, Owner may order the disputed portion of Work deleted from the Work, or performed by others, or Owner may invoke its right to terminate Contractor's right to proceed under the Contract Documents in whole or in part, for convenience or for cause as the facts may warrant.

13.5.G. If Contractor does not agree with any Owner determination of any adjustment in the Contract Sum or Contract Time under this paragraph 13.5, Contractor may make a claim as provided in Article 12 of this Document 00700.

13.6 Suspension Of Work

13.6.A. Owner may, without cause, order Contractor in writing to suspend, delay or interrupt Work in whole or in part for such period of time as Owner may determine. An adjustment shall be made for increases in cost of performance of Work of the Contract Documents caused by any such suspension, delay or interruption, calculated using the measures set forth in Section 01250 (Modification Procedures). No adjustment shall be made to extent that performance is, was or would have been so suspended, delayed or interrupted by another cause for which Contractor is responsible.

13.7 Termination Of Contract For Cause

13.7.A. The Contractor shall be in default of the Contract Documents and Owner may terminate the Contractor's right to proceed under the Contract Documents, for cause, in whole or in part, should the Contractor commit a material breach of the Contract Documents and not cure such breach within ten Days of the date of notice from Owner to the Contractor demanding such cure; or, if such breach is curable but not curable within such ten-Day period, within such period of time as is reasonably necessary to accomplish such cure. (In order for the Contractor to avail itself of a time period in excess of ten Days, the Contractor must provide Owner within the ten-Day period with a written plan acceptable to Owner that demonstrates actual resources, personnel and a schedule to promptly cure said breach, and then diligently commence and continue such cure according to the written plan).

13.7.B. In the event of termination by Owner for cause as provided above, the Contractor shall deliver to Owner possession of the Work in its then condition, including but not limited to, all designs, engineering, Project records, cost data of all types, plans and specifications and contracts with vendors and Subcontractors, all other documentation associated with the Project, and all construction supplies and aids dedicated solely to performing the Work which, in the normal course of construction, would be consumed or only have salvage value at the end of the construction period. The Contractor shall remain fully liable for the failure of any Work completed and materials and equipment provided through the date of such termination to comply with the provisions of the Contract Documents. The provisions of this Document 00700 shall not be interpreted to diminish any right which Owner may have to claim and recover damages for any breach of the Contract Documents or otherwise, but rather, the Contractor shall compensate Owner for all loss, cost, damage, expense, and/or liability suffered by Owner as a result of such termination and/or failure to comply with the Contract Documents.

13.7.C. In the event a termination for cause is later determined to have been made wrongfully or without cause, then the termination shall be treated as a termination for convenience, and the Contractor shall have no greater rights than it would have had following a termination for convenience. Any Contractor claim arising out of a termination for cause shall be made in accord with Article 12 herein. No other loss, cost, damage, expense or liability may be claimed, requested or recovered by the Contractor.

13.8 Termination Of Contract For Convenience

13.8.A. Owner may terminate performance of the Work under the Contract Documents in accordance with this clause in whole, or from time to time in part, whenever Owner shall determine that termination is in Owner's best interest. Termination shall be

effected by Owner delivering to the Contractor notice of termination specifying the extent to which performance of the Work under the Contract Documents is terminated, and the effective date of the termination.

13.8.B. Contractor shall comply strictly with Owner's direction regarding the effective date of the termination, the extent of the termination, and shall stop Work on the date and to the extent specified.

13.8.C. Contractor shall be entitled to a total payment on account of the Contract Work so terminated measured by (i.) the actual cost to Contractor of Work actually performed, up to the date of the termination, with profit and overhead limited to 12 percent of actual cost of Work performed, up to but not exceeding the actual Contract value of the Work completed as measured by the Schedule of Values and Progress Schedule, (ii.) offset by payments made and other Contract credits. In connection with any such calculation, however, Owner shall retain all rights under the Contract Documents, including but not limited to claims, indemnities, or setoffs.

13.8.D. Under no circumstances may Contractor recover legal costs of any nature, nor may Contractor recover costs incurred after the date of the termination.

13.9 Contingent Assignment Of Subcontracts

13.9.A. Contractor hereby assigns to Owner each Subcontract for a portion of the Work, provided that:

1. The assignment is effective only after Owner's termination of Contractor's right to proceed under the Contract Documents (or portion thereof relating to that Subcontract) pursuant to paragraphs 13.7 and 13.8 of this Document 00700.
2. The assignment is effective only for the Subcontracts which Owner expressly accepts by notifying the Subcontractor in writing;
3. The assignment is subject to the prior rights, if any, of the Surety, obligated by Document 00611 (Construction Performance Bond) provided under the Contract Documents, where the Surety exercises its rights to complete the Contract;
4. After the effectiveness of an assignment, Contractor shall, at its sole cost and expense (except as otherwise provided in paragraphs 13.7 and 13.8 of this Document 00700), sign all instruments and take all actions reasonably requested by Owner to evidence and confirm the effectiveness of the assignment in Owner; and
5. Nothing in this paragraph 13.9 shall modify or limit any of Contractor's obligations to Owner arising from acts or omissions occurring before the effectiveness of any Subcontract assignment, including but not limited to all defense, indemnity and hold-harmless obligations arising from or related to the assigned Subcontract.

13.10 Remedies And Contract Integration

13.10.A. Subject to Contract Documents provisions regarding Contractor claims, claim review, and claim resolution, and subject to the limitations therein, the exclusive jurisdiction and venue for resolving all claims, counter-claims, disputes and other matters in question between Owner and Contractor arising out of or relating to Contract Documents, any breach thereof or the Project shall be the applicable court of competent jurisdiction located in the State of California, County of Sonoma. All Owner remedies provided in the Contract Documents shall be taken and construed as cumulative and not exclusive; that is, in addition to each and every other remedy herein provided; and in all instances Owner shall have any and all other equitable and legal rights and remedies which it would have according to law.

13.10.B. The Contract Documents, any Contract Modifications, and Change Orders shall represent the entire and integrated agreement between Owner and Contractor regarding the subject matters hereof and thereof and shall constitute the exclusive statement of the terms of the parties' agreement. The Contract Documents, and any Contract Modifications and Change Orders, shall supersede any and all prior negotiations, representations or agreements, written or oral, express or implied, that relate in any way to the subject matter of the Contract Documents or written Modifications. Owner and Contractor represent and agree that, except as otherwise expressly provided in the Contract Documents, they are entering into the Contract Documents and any subsequent written Modification in sole reliance upon the information set forth or referenced in the Contract Documents or Contract Modifications and the parties are not and will not rely on any other information.

13.10.C. Either party's waiver of any breach or failure to enforce any of the terms, covenants, conditions or other provisions of the Contract Documents at any time shall not in any way affect, limit, modify or waive that party's right thereafter to enforce or compel strict compliance with every term, covenant, condition or other provision hereof, any course of dealing or custom of the trade or oral representations notwithstanding.

13.11 Patents

13.11.A. Fees or claims for any patented invention, article or arrangement that may be used upon or in any manner connected with performance of the Work or any part thereof shall be included in the Bid price for doing the Work. Contractor shall defend, indemnify and hold harmless Owner and each of its officers, employees, consultants and agents, including, but not limited to, the Board and each Owner's Representative, from all damages, claims for damages, costs or expenses in law or equity, including attorneys' fees, arising from or relating to any claim that any article supplied or to be supplied under the Contract Documents infringes on the patent rights, copyright, trade name, trademark, service mark, trade secret or other intellectual property right of any person or persons or that the person or entity supplying the article does not have a lawful right to sell the same. Such costs or expenses for which Contractor agrees to indemnify and hold harmless the above indemnities include but are not limited to any and all license fees, whether such fees are agreed by any indemnitee or ordered by a court or administrative body of any competent jurisdiction.

13.12 Substitution For Patented And Specified Articles

13.12.A. Except as provided otherwise in Document 00200 (Instructions to Bidders) or in the Contract Documents, whenever in Specifications, material or process is designated by patent or proprietary name or by name of manufacturer, such designation shall be deemed to be used for purpose of facilitating description of material and process desired, and shall be deemed to be followed by the words "or Approved Equal" and Contractor may offer any substitute material or process that Contractor considers "equal" in every respect to that so designated and if material or process offered by Contractor is, in opinion of Owner, Equal in every respect to that so designated, its use will be approved. However, Contractor may utilize this right only by timely submitting Document 00660 (Substitution Request Form) as provided in Document 00200 (Instructions to Bidders). A substitution will be approved only if it is a true Equal item in every aspect of its design and quality, including but not limited to its

dimensions, weights, service requirements, durability, functioning, impact on contiguous construction elements, overall schedule and design.

13.13 Interest Of Public Officers

13.13.A. No representative, officer, or employee of Owner, no member of the governing body of the locality in which the Project is situated, no member of the locality in which Owner was activated, and no other public official of such locality or localities who exercises any functions or responsibilities with respect to the Project, during the tenure of the official or for one year thereafter, shall, as principal, agent, attorney or otherwise, be directly or indirectly interested, in the Contract Documents or the proceeds thereof.

13.14 Limit Of Liability

13.14.A. OWNER, AND EACH OF ITS OFFICERS, BOARD MEMBERS, EMPLOYEES, CONSULTANTS AND AGENTS INCLUDING, BUT NOT LIMITED TO, ENGINEER AND EACH OTHER OWNER REPRESENTATIVE, SHALL HAVE NO LIABILITY TO CONTRACTOR FOR SPECIAL, CONSEQUENTIAL, OR INCIDENTAL DAMAGES, EXCEPT TO THE LIMITED EXTENT THAT THESE CONTRACT DOCUMENTS OR APPLICABLE PUBLIC CONTRACTING STATUTES MAY SPECIFY THEIR RECOVERY.

14. MODIFICATIONS OF CONTRACT DOCUMENTS

14.1 Alterations, Modifications, And Force Account Work

14.1.A. No modification or deviation from the Drawings and Specifications will be permitted except by written Contract Modification.

14.1.B. Owner may, without notice to the sureties, make alterations, deviations, additions to, or deletions from Contract Documents; increase or decrease the quantity of any item or portion of the Work; expand, contract or otherwise change the Contract Time; delete any item or portion of the Work; and require extra Work. Contractor shall perform such Work under applicable provisions of the Contract Documents, unless specifically provided otherwise at the time the change is ordered. In the case of any ordered extra Work, Owner reserves the right to furnish all or portions of associated labor, material, and equipment, which Contractor shall accept and use without payment for costs, markup, profit, or otherwise for such Owner-furnished labor, materials, and equipment.

14.1.C. Changes affecting the Contract Time or Contract Sum of the Work shall be set forth in a written Change Order that shall specify:

1. The Work performed in connection with the change to be made;
2. The amount of the adjustment of the Contract Sum, if any, and the basis for compensation for the Work ordered; and
3. The extent of the adjustment in the Contract Time, if any.

14.1.D. A Change Order will become effective when signed by Owner, notwithstanding that Contractor has not signed it.

14.1.E. Procedures for Modifications of Contract Documents and for calculating the cost of extra and deleted Work are given in Section 01250 (Modification Procedures). Regarding delay and impact costs of any nature, Contractor may not seek delay compensation for on-Site or off-Site costs based on formulas, e.g., “Eichlay” or other formula. Rather, Contractor shall prove actual costs resulting from such delays.

14.1.F. Owner's General Manager/Chief Engineer is authorized to approve Change Orders in accordance with Resolution No. 04-0547 dated June 8, 2004. The approval period for such Change Orders is approximately seven Days from receipt of the signed Change Order from Contractor. If a Change Order is equal to or greater than the amounts authorized by Resolution No. 04-0547, it may be necessary for the Board to approve the Change Order, and if so the approval period is approximately 28 Days from receipt of the signed Change Order from Contractor. A performance bond rider covering the changed Work must be executed and delivered to Owner before proceeding with the changed Work. Contractor is charged with knowledge of Owner's approved Change Order limits and procedures in effect at the applicable time.

15. TIME ALLOWANCES

15.1 Entitlement To Change Of Contract Time

15.1.A. The Contract Time may only be changed by Change Order or by Contract Modification, and all time limits stated in the Contract Documents are of the essence of Contract Documents.

15.1.B. The Contract Time will be adjusted in an amount equal to the time lost due to:

1. Changes in the Work ordered by Owner;
2. Acts or neglect by Owner, Engineer, any Owner's Representative, utility owners or other contractors performing other work, provided that Contractor has fully and completely performed its responsibilities under the Contract Documents; or
3. Fires, floods, epidemics, abnormal weather conditions beyond the parameters otherwise set forth in this paragraph 15.1, earthquakes, civil or labor disturbances, strikes or Acts of God, provided damages resulting therefrom are not the result of Contractor's failure to protect the Work as required by Contract Documents.

15.1.C. The Contract Time shall not be extended for any cause identified in paragraph 15.1.B above, however, unless:

1. Contractor actually has been prevented from completing any part of the Work within the Contract Time due to delay that is beyond Contractor's control and due to reasons for which Contractor is not responsible (delays attributable to and within the control of a Subcontractor, or its subcontractors, or supplier shall be deemed to be delays within the control of Contractor);
2. A claim for delay is made as provided herein; and
3. Contractor submits a critical path analysis that demonstrates actual delay to critical Work activities that actually delay the progress of the Work in the amount of time requested.

15.2 Weather-Related Delays

15.2.A. Delays due to abnormal or adverse weather conditions will not be allowed for weather conditions that fall within the parameters listed herein. Adverse weather delays may be allowed only if the number of workdays of adverse weather exceeds these on a monthly basis and Contractor proves that adverse weather actually caused delays. Contractor shall give written notice of intent to claim an adverse weather Day within one Day of the adverse weather delay occurring. Rain parameters are as follows, pro-rated in the individual month Contractor starts and finishes Work.

Rain Days: January, [9]; February, [8]; March, [7]; April, [4]; May, [2]; June, [1]; July, [0]; August, [0]; September, [1]; October, [3]; November, [6]; and December, [8].

In order to qualify as an adverse weather delay with respect to the foregoing parameters, daily rainfall must exceed 0.10 of an inch or more at the Santa Rosa, California station, as measured by the National Oceanic & Atmospheric Administration, and Contractor must prove that the rain actually caused delay as set forth above.

15.2.B. Contractor shall include the foregoing rain parameters as a monthly activity in its Progress Schedule. As Work on the critical path is affected by rain, Contractor shall notify Owner and request that the Days be moved to the affected activities. Any adverse weather Days remaining shall be considered Project Float.

15.2.C. Adverse weather delay for rain shall be recognized for the actual period of time Contractor proves it was delayed by rain exceeding the specified parameters. For example, and not by way of limitation, if rain exceeding the specified parameters does not in fact delay Contractor's progress on the critical path, then no time extension shall be recognized; and conversely, if Contractor proves that rain exceeding the specified parameters causes delay to Contractor for a period longer than the number of rain Days incurred (e.g., if it rains during grading Work), then Contractor shall be entitled to a time extension equal to the actual period of such delay.

15.2.D. Contractor shall take reasonable steps to mitigate potential weather delays, such as dewatering the Site, covering Work and material that could be affected adversely by weather, and using all necessary construction means and methods to dry and/or aerate wet soils. Failure to do so shall be cause for Owner to not grant a time extension due to adverse weather, where Contractor could have avoided or mitigated the potential delay by exercising reasonable care.

15.3 Notice Of Delay

15.3.A. Within seven Days of the beginning of any delay, Contractor shall notify Owner in writing, by submitting a notice of potential claim, of all anticipated delays resulting from the delay event in question. Any request for extension of time shall be accompanied by Contractor's written statement that the adjustment claimed is the entire adjustment to which the Contractor is entitled as a result of the occurrence of the delay event, and shall include a written schedule document that demonstrates delay to the critical path using a critical path analysis. Owner will determine all claims and adjustments in the Contract Time. No claim for an adjustment in the Contract Time will be valid and such claim will be waived if not submitted in accordance with the requirements of this paragraph.

15.4 Time Extensions And/Or Compensation Entitlement For Delays

15.4.A. Contractor may receive a time extension and be compensated for delays caused directly and solely by Owner.

15.4.B. Contractor may receive a time extension without compensation for delays resulting in whole or in part from causes beyond the reasonable control of Contractor and Owner, e.g., adverse weather conditions exceeding Contract Documents parameters, acts of third parties unrelated to Contractor's obligations herein, earthquakes, Acts of God of God and epidemics. In such cases, a time extension without compensation shall constitute Contractor's sole and exclusive remedy for such delays.

15.4.C. Contractor shall not be entitled to any time extension or compensation during periods of delay caused in whole or in part by Contractor's failure to perform its obligations

under the Contract Documents, or concurrently caused by Contractor and either Owner or others.

15.4.D. Contractor shall not be entitled to compensation for delay to the Work caused by the following reasons:

1. Owner's right to sequence the Work in a manner which would avoid disruption to Owner's contractors and their subcontractors and Owner's employees, exercised as a result of Contractor's failure to perform its cooperation and coordination responsibilities required by Contract Documents; Owner's enforcement of any government act or regulation; or the provisions of the Contract Documents;
2. For changed Site conditions that are beyond the parties' contemplation, except that Owner may approve direct costs associated with unknown conditions (but not costs or damages which result from such delays); and
3. Extensive requests for clarifications to Contract Documents or Contract Modifications thereto, provided such clarifications or Contract Modifications are processed by Owner or its consultants in a reasonable time commensurate with Contract Documents requirements.

15.4.E. (As used herein, "compensation" includes any and all claims of any type for costs or damages resulting from delay, including but not limited to, and by way of example only, extended field or home office overhead, field supervision, costs of capital, interest, escalation charges, acceleration costs or other impacts for any delays.)

15.5 Liquidated Damages

15.5.A. Time is of the essence. Execution of Contract Documents by Contractor shall constitute acknowledgement by Contractor that Contractor understands, has ascertained and agrees that Owner will actually sustain damages in the amount fixed in the Contract Documents for each and every Day during which completion of Work required is delayed beyond expiration of time fixed for completion or extensions of time allowed pursuant to provisions hereof. Contractor and Owner agree that specified measures of liquidated damages shall be presumed to be the damages actually sustained by Owner as defined in Document 00520 (Agreement), and that because of the nature of the Project, it would be impracticable or extremely difficult to fix the actual damages.

15.5.B. Owner may deduct from any money due or to become due to Contractor subsequent to time for completion of entire Work and extensions of time allowed pursuant to provisions hereof, a sum representing then-accrued liquidated damages.

16. WORKING CONDITIONS AND PREVAILING WAGES

16.1 Use Of Site/Sanitary Rules

16.1.A. All portions of the Work shall be maintained at all times in neat, clean and sanitary condition. Contractor shall furnish toilets for use of Contractor's and Subcontractors' employees on the Site where needed, and their use shall be strictly enforced. All toilets shall be properly secluded from public observation, and shall be located, constructed and maintained subject to Owner's approval.

16.1.B. Contractor shall confine construction equipment, the storage of materials and equipment and the operations of workers to the Site and land areas identified in and permitted by Contract Documents and other land and areas permitted by applicable laws and regulations, rights of way, permits and easements or as designated by Owner, and shall not unreasonably encumber the premises with construction

equipment or other materials or equipment. Contractor shall assume full responsibility for any damage to any such land or area, any improvement located thereon, or to the owner or occupant thereof resulting from the performance of Work.

16.1.C. During the progress of the Work, Contractor shall keep the Site and the Project free from accumulations of waste materials, rubbish and other debris resulting from the Work. At the completion of the Work, Contractor shall clean the Site; remove all waste materials, rubbish, and debris from and about the Site as well as all tools, appliances, construction equipment and machinery and surplus materials. Contractor shall leave the premises clean and ready for occupancy by Owner at Substantial Completion of Work. Contractor shall restore to original condition all property not designated for alteration by Contract Documents.

16.1.D. Contractor shall not load nor permit any part of any structure or pavement to be loaded in any manner that will endanger the structure or pavement, nor shall Contractor subject any part of Work or adjacent property to stresses or pressures that will endanger it. Contractor shall conduct all necessary existing conditions investigation regarding structural, mechanical, electrical or any other system existing, shall perform Work consistent with such existing conditions, and shall have full responsibility for insufficiencies or damage resulting from insufficiencies of existing systems, equipment or structures to accommodate performing the Work.

16.2 Protection Of Work, Persons, And Property

16.2.A. Contractor shall be responsible for initiating, maintaining and supervising all safety and Site security precautions and programs in connection with Work, and shall develop and implement a Site security and safety plan throughout construction. Contractor shall comply with all safety requirements specified in any safety program established by Owner, or required by state, federal or local laws and ordinances. Contractor shall be responsible for all theft or damage to Work, property or structures, and all injuries to persons, either on the Site or constituting the Work (e.g., materials in transit), arising from the performance of Work of the Contract Documents from any cause.

16.2.B. Contractor shall comply with all applicable laws and regulations of any public body having jurisdiction for safety of persons or property or to protect them from damage, injury or loss; and shall erect and maintain all necessary safeguards for such safety and protection. Contractor shall notify owners of adjacent property and of Underground Facilities and utility owners when prosecution of the Work may affect them, and shall cooperate with them in the protection, removal, relocation and replacement of their property.

16.2.C. Contractor shall remedy all damage, injury or loss to any property referred to in paragraph 16.2.A of this Document 00700, caused, directly or indirectly, in whole or in part, by Contractor, any Subcontractor, supplier, or any other person or organization directly or indirectly employed by any of them to perform or furnish any Work or anyone for whose acts any of them may be liable. Contractor's duties and responsibility for safety and for protection of Work shall continue until such time as all the Work is completed and Final Acceptance of the Work. Owner and its agents do not assume any responsibility for collecting any indemnity from any person or persons causing damage to Contractor's Work.

16.2.D. Contractor shall designate a qualified and experienced safety representative at the Site whose duties and responsibilities shall be the prevention of accidents and the maintaining and supervising of safety precautions and programs.

16.2.E. Owner may, at its option, retain such moneys due under the Contract Documents as Owner deems necessary until any and all suits or claims against Contractor for injury to persons or property shall be settled and Owner receives satisfactory evidence to that effect.

16.3 Responsibility For Safety And Health

16.3.A. Contractor shall ensure that its and each tier of Subcontractors' employees, agents and invitees comply with applicable health and safety laws while at the Site. These laws include the Occupational Safety and Health Act of 1970 and rules and regulations issued pursuant thereto, and Owner's safety regulations as amended from time to time. Contractor shall comply with all Owner directions regarding protective clothing and gear.

16.3.B. Contractor shall be fully responsible for the safety of its and its Subcontractors' employees, agents and invitees on the Site. Contractor shall notify Owner, in writing, of the existence of hazardous conditions, property or equipment at the Site that are not under Contractor's control. Contractor shall be responsible for taking all the necessary precautions against injury to persons or damage to the property of Contractor, Subcontractors or persons from recognized hazards until the responsible party corrects the hazard.

16.3.C. Contractor shall confine all persons acting on its or its Subcontractors' behalf to that portion of the Site where Work under the Contract Documents is to be performed, Owner-designated routes for ingress and egress thereto, and any other Owner-designated area. Except those routes for ingress and egress over which Contractor has no right of control, within such areas, Contractor shall provide safe means of access to all places at which persons may at any time have occasion to be present.

16.4 Emergencies

16.4.A. In emergencies affecting the safety or protection of persons or Work or property at the Site or adjacent thereto, Contractor, without special instruction or authorization from Owner, is obligated to act to prevent threat and damage, injury or loss, until directed otherwise by Owner. Contractor shall give Owner prompt written notice if Contractor believes that any significant changes in Work or variations from Contract Documents have been caused thereby. If Owner determines that a change in the Contract Documents is required because of the action taken by Contractor in response to such an emergency, a Change Order or Construction Change Directive will be issued to document the consequences of such action.

16.5 Use Of Roadways And Walkways

16.5.A. Contractor shall not unnecessarily interfere with use of any roadway, walkway or other facility for vehicular or pedestrian traffic. Before beginning any interference and only with Owner's prior concurrence, Contractor may provide detour or temporary bridge for traffic to pass around or over the interference, which Contractor shall maintain in satisfactory condition as long as interference continues. Unless otherwise provided in the Contract Documents, Contractor shall bear the cost of these temporary facilities.

16.6 Nondiscrimination

16.6.A. No person or entity shall discriminate in the employment of persons upon public works because of race, religious creed, color, national origin, ancestry, physical disability, mental disability, medical condition, marital status, sexual preference, or gender of such persons, except as provided in Section 12940 of the Government Code. Every contractor for public works violating the provisions of Section 1735 of the Labor Code is subject to all the penalties imposed for a violation of Chapter 1, Part 7, Division 2 of the Labor Code. Contractor agrees to comply with the provisions of Chapter 19, Article II, of the Sonoma County Code prohibiting discrimination in housing, employment, and services because of AIDS or HIV infection during the term of this Contract and any extensions of the term.

16.7 Prevailing Wages

16.7.A. Contractor shall pay to persons performing labor in and about Work provided for in the Contract Documents an amount equal to or more than the general prevailing rate of per diem wages for (1) work of a similar character in the locality in which the Work is performed and (2) legal holiday and overtime work in said locality. The per diem wages shall be an amount equal to or more than the stipulated rates contained in a schedule that has been ascertained and determined by the Director of the State Department of Industrial Relations and Owner to be the general prevailing rate of per diem wages for each craft or type of workman or mechanic needed to execute this Contract. Contractor shall also cause a copy of this determination of the prevailing rate of per diem wages to be posted at each Site.

16.7.B. Contractor shall forfeit, as a penalty to Owner, Fifty Dollars ($50.00) for each laborer, workman, or mechanic employed in performing labor in and about the Work provided for in the Contract Documents for each Day, or portion thereof, that such laborer, workman or mechanic is paid less than the said stipulated rates for any Work done under the Contract Documents by him or her or by any Subcontractor under him or her, in violation of Articles 1 and 2 of Chapter 1 of Part 7 of Division II of the California Labor Code. The sums and amounts which shall be forfeited pursuant to this paragraph 16.7.B and the terms of the Labor Code shall be withheld and retained from payments due to Contractor under the Contract Documents, pursuant to this Document 00700 and the Labor Code, but no sum shall be so withheld, retained or forfeited except from the final payment without a full investigation by either the State Department of Industrial Relations or by Owner. The Labor Commissioner pursuant to Labor Code Section 1775 shall determine the final amount of forfeiture.

16.7.C. Contractor shall insert in every subcontract or other arrangement which Contractor may make for performance of Work or labor on Work provided for in the Contract, provision that Subcontractor shall pay persons performing labor or rendering service under subcontract or other arrangement not less than the general prevailing rate of per diem wages for work of a similar character in the locality in which the Work is performed, and not less than the general prevailing rate of per diem wages for holiday and overtime work fixed in the Labor Code.

16.7.D. Contractor stipulates that it shall comply with all applicable wage and hour laws, including without limitation Labor Code Section 1813 and 1815.

16.8 Environmental Controls

16.8.A. Contractor shall comply with all rules, regulations, ordinances, and statutes that apply to any Work performed under the Contract Documents including, without limitation, any toxic, water, storm water management and soil pollution controls and air pollution controls specified in Government Code Section 11017. Contractor shall be responsible for insuring that Contractor's Employees, Subcontractors, and the public are protected from exposure to airborne hazards or contaminated water, soil, or other toxic materials used during or generated by activities on the Site or associated with the Project.

16.9 Shoring Safety Plan

16.9.A. Any conflict between this paragraph 16.9 and Division 2 of the Specifications shall be resolved in favor of the most stringent requirement.

16.9.B. At least five Days in advance of any excavation five feet or more in depth, Contractor shall submit to Owner a detailed plan showing the shoring, bracing and sloping design (including calculations) and other provisions to be made for worker protection from the hazard of caving ground during the excavation, as required by Labor Code Section 6705. A civil or structural engineer registered in California shall prepare and sign any plan that varies from the shoring system standards established by the State Construction Safety Orders.

16.9.C. During the course of Work, Contractor shall be responsible for determining where sloping, shoring, and/or bracing is necessary and the adequacy of the design, installation, and maintenance of all shoring and bracing for all excavation, including any excavation less than five feet in depth. Contractor will be solely responsible for any damage or injuries that may result from excavating or trenching. Owner's acceptance of any drawings showing the shoring or bracing design or Work schedule shall not relieve Contractor of its responsibilities under this paragraph 16.9.

16.9.D. Appoint a qualified supervisory employee who shall be responsible to determine the sloping or shoring system to be used depending on local soil type, water table, stratification, depth, etc.

END OF DOCUMENT

DOCUMENT 00800

SUPPLEMENTARY CONDITIONS

1. SUMMARY

A. This document includes requirements that supplement the paragraphs of Document 00700 (General Conditions).

2. SUPPLEMENTS

A. Supplement to paragraph 4.2:

4.2.A. Contractor - Required Insurance.

1. At or before the date specified in Document 00510 (Notice of Award), Contractor shall furnish to Owner satisfactory proof that Contractor has obtained the following insurance as specified below:
   a. Workers' Compensation Insurance & Employers Liability Insurance.
      1) Workers' Compensation insurance with statutory limits as required by the Labor Code of the State of California.
      2) Employers Liability with limits of $1,000,000 per Accident; $1,000,000 Disease per employee; $1,000,000 Disease per policy.
      3) The policy shall be endorsed to include a written waiver of the insurer's right to subrogate against Owner.
      4) Required Evidence of Coverage:
         (a) Subrogation waiver endorsement, and
         (b) Certificate of Insurance.
      5) If injury occurs to any employee of Contractor, Subcontractor, or sub-subcontractor for which the employee, or the employee's dependents in the event of employee's death, is entitled to compensation from Owner under provisions of the Workers' Compensation Insurance and Safety Act (Act), as amended, or for which compensation is claimed from Owner, Owner may retain out of sums due Contractor under Contract Documents, amount sufficient to cover such compensation, as fixed by the Act, as amended, until such compensation is paid, or until it is determined that no compensation is due. If Owner is compelled to pay compensation, Owner may, in its discretion, either deduct and retain from the Contract Sum the amount so paid, or require Contractor to reimburse Owner.
   b. General Liability Insurance.
      1) Commercial General Liability Insurance on a standard occurrence form, no less broad than ISO form CG 00 01.
      2) Minimum Limits:
         (a) Projects under $1,000,000: $1,000,000 per Occurrence; $2,000,000 General Aggregate; $2,000,000 Products/Completed Operations Aggregate. The General Aggregate shall apply separately to each Project.
         (b) Projects from $1,000,000 - $4,999,999: $2,000,000 per Occurrence; $4,000,000 General Aggregate; $4,000,000 Products/Completed Operations Aggregate. The General Aggregate shall apply separately to each Project.

(c) Projects from $5,000,000 - $9,999,999: $5,000,000 per Occurrence; $5,000,000 General Aggregate; $5,000,000 Products/Completed Operations Aggregate. The General Aggregate shall apply separately to each Project.
(d) Projects $10,000,000 and Over: Minimum Limits: $10,000,000 per Occurrence; $10,000,000 General Aggregate; $10,000,000 Products/Completed Operations Aggregate. The General Aggregate shall apply separately to each Project.

3) Contractor shall disclose any deductible or self-insured retention in excess of $25,000 and such deductible or self-insured retention must be approved in advance by Owner. Contractor is responsible for any deductible or self-insured retention.
4) Coverage shall be maintained for the entire period of the Work. Completed operations coverage shall be maintained for the additional periods specified below:
   (a) Projects under $1,000,000: One (1) year after Final Completion and acceptance of the final payment for the Work.
   (b) Projects from $1,000,000 - $4,999,999: Two (2) years after Final Completion and acceptance of the final payment for the Work.
   (c) Projects from $5,000,000 - $9,999,999: Three (3) years after Final Completion and acceptance of the final payment for the Work.
   (d) Projects $10,000,000 and Over: Five (5) years after Final Completion and acceptance of the final payment for the Work.
5) Owner, its Board of Directors, and its employees, representatives, consultants, and agents; shall be additional insureds for liability arising out of ongoing <u>and</u> completed operations by or on behalf of the Contractor in the performance of the Contract Documents. Contractor shall maintain completed operations coverage and continue Owner *et al.* as additional insureds for the period(s) specified in paragraph 4) above after completion of the Work under the Contract.
6) City of Sonoma and Sonoma County Agricultural Preservation and Open Space District shall be additional insureds for liability arising out of Contractor's ongoing operations (ISO endorsement CG 20 26, Additional Insured – Designated Person or Organization, or equivalent).
7) The policy definition of "insured contract" shall include assumptions of liability arising out of both ongoing operations and the products-completed operations hazard (broad form contractual liability coverage including the "f" definition of insured contract in ISO form CG 00 01, or equivalent).
8) The insurance provided to Owner *et al.* as additional insureds shall apply on a primary and non-contributory basis with respect to any insurance or self-insurance program maintained by Owner *et al.*
9) The policy shall not exclude injury or damage caused by, or resulting from, explosion, collapse and/or underground hazards, subsidence, mold or silica.
10) The policy shall not contain a Contractors' Warranty or other similar language which eliminates or restricts coverage because of a

Subcontractor's failure to carry specific insurance or to supply evidence of such insurance.

11) The policy shall be endorsed to include a written waiver of the insurer's right to subrogate against all persons or entities that are, or are required to be, additional insureds.
12) The policy shall cover inter-insured suits between Owner and Contractor and include a “separation of insureds” or “severability” clause which treats each insured separately.
13) Required Evidence of Coverage:
    (a) Additional insured endorsements or policy language granting additional insured status;
    (b) Endorsement or policy language indicating that coverage is primary and non-contributory; and
    (c) Certificate of Insurance.

c. Automobile Liability Insurance.
    1) Minimum Limits:
        (a) Projects under $1,000,000: $1,000,000 combined single limit per accident.
        (b) Projects $1,000,000 and Over: $2,000,000 combined single limit per accident.
    2) Coverage shall apply to all owned, hired, and non-owned vehicles.
    3) Owner, its Board of Directors, and its employees, representatives, consultants, and agents; and shall qualify as an insured.
    4) Required Evidence of Coverage:
        (a) Endorsement or policy language indicating that Owner, its Board of Directors, and its employees, representatives, consultants, and agents; are insureds; and
        (b) Certificate of Insurance.

d. Professional Liability Insurance.
    1) Required if the Contractor or its employees engage in design or professional activities (architecture, engineering or surveying) that are not subcontracted out.
    2) Minimum Limit: $1,000,000.
    3) Contractor shall disclose any deductible or self-insured retention in excess of $25,000.
    4) If the insurance is on a Claims-Made basis, the retroactive date shall be no later than the commencement of the Work.
    5) Coverage applicable to the Work performed under the Contract shall be continued for two (2) years after completion of the Work. Such continuation coverage may be provided by one of the following: (a) renewal of the existing policy; (b) an extended reporting period endorsement; or (c) replacement insurance with a retroactive date no later than the commencement of the Work.
    6) Required Evidence of Coverage:
        (a) Certificate of Insurance.

2. Increase of Minimum Limits.

a. Required minimum amounts of insurance may be increased should conditions of Work, in opinion of Owner, warrant such increase. Contractor shall increase required insurance amounts upon direction by Owner.

3. Standards for Insurance Companies.
   a. Insurers, other than the California State Compensation Insurance Fund, shall have an A.M. Best's rating of at least A:VII.
4. Documentation.
   a. The Certificate of Insurance shall include the following reference: Sonoma Tanks Fence Replacement.
   b. Contractor agrees to maintain current Evidence of Coverage on file with Owner for the required period of insurance. Any requirement to maintain insurance after Final Completion of the Work, including providing Certificates evidencing required coverage(s), shall survive the Contract.
      1) Required Evidence of Insurance shall be submitted to Sonoma County Water Agency, 404 Aviation Boulevard, Santa Rosa, CA 95403-9019.
      2) Required Evidence of Coverage shall be submitted for any renewal or replacement of a policy that already exists, at least ten (10) days before expiration or other termination of the existing policy.
      3) Contractor shall provide immediate written notice if: (a) any of the required insurance policies is terminated; (b) the limits of any of the required policies are reduced; or (c) the deductible or self-insured retention is increased.
      4) Upon written request, certified copies of required insurance policies must be provided within thirty (30) days.
5. Material Breach.
   a. If Contractor fails to maintain insurance coverage which is required pursuant to the Contract Documents, it shall be deemed a material breach. Owner, at its sole option, may terminate the Contract for default and obtain damages from Contractor resulting from said breach. Alternatively, Owner may purchase the required insurance coverage, and without further notice to Contractor, Owner may deduct from sums due to Contractor any premium costs advanced by Owner for such insurance. These remedies shall be in addition to any other remedies available to Owner under the Contract Documents or Law.

4.2.B. <u>Subcontractors - Required Insurance.</u>

1. With respect to their portion of the Work, Subcontractors of all tiers shall maintain the same insurance required to be maintained by Contractor with limits as follows:
   a. Minimum General Liability Limits for Framing, Mechanical, and Electrical Subcontractors.
      1) Projects under $1,000,000: $1,000,000 per Occurrence; $2,000,000 General Aggregate; $2,000,000 Products/Completed Operations Aggregate. The General Aggregate shall apply separately to each Project.
      2) Projects $1,000,000 and Over: $2,000,000 per Occurrence; $4,000,000 General Aggregate; $4,000,000 Products/Completed Operations Aggregate. The General Aggregate shall apply separately to each Project.
   b. Minimum General Liability Limits for all Subcontractors other than Framing, Mechanical, and Electrical Subcontractors.

1) $1,000,000 per Occurrence; $2,000,000 General Aggregate; $2,000,000 Products/Completed Operations Aggregate. The General Aggregate shall apply separately to each Project.

c. Minimum Automobile Liability Limits.
   1) $1,000,000 combined single limit per accident.

d. Minimum Employers Liability Limits.
   1) $1,000,000 per Accident; $1,000,000 Disease per employee; $1,000,000 Disease per policy.

e. Professional Liability Insurance.
   1) Required for any architect, engineer, surveyor or other licensed professional engaged by Contractor to perform portions of the Work.
   2) Minimum Limit: $1,000,000.
   3) Contractor shall disclose any deductible or self-insured retention in excess of $25,000.
   4) If the insurance is on a Claims-Made basis, the retroactive date shall be no later than the commencement of the Work.
   5) Coverage applicable to the Work performed under the Contract shall be continued for two (2) years after completion of the Work. Such continuation coverage may be provided by one of the following: (a) renewal of the existing policy; (b) an extended reporting period endorsement; or (c) replacement insurance with a retroactive date no later than the commencement of the Work.
   6) Required Evidence of Coverage:
      (a) Certificate of Insurance.

4.2.C. Builder's Risk.

1. With respect to Work under this Contract, Owner shall maintain "All-Risk" Course of Construction insurance as follows:
   a. Insured Property shall include: (1) Real property in Course of Construction; (2) building materials and supplies intended to be in or on the completed Work located at the Site, in storage or in transit, and whether or not owned or paid for by Owner; (3) fixtures and machinery intended to be in or on the completed Work; (4) scaffolding, cribbing, fencing, forms and temporary trailers, while located on the Site, in storage or in transit.
   b. Limit of insurance shall be the full contract value.
   c. Deductibles for claims against this coverage will not exceed $50,000. Responsibility for paying deductibles is as follows:

Contract Value or Description	**Contractor's Responsibility for Deductible**	**Owner's Responsibility for Deductible**
Full Contract Value under $1,000,000	First $5,000	Balance of Deductible
Full Contract Value: $1,000,000 - $9,999,999	First $10,000	Balance of Deductible

Full Contract Value: $10,000,000 - $19,999,999	First $25,000	Balance of Deductible
Full Contract Value: $20,000,000 and above	First $30,000	Balance of Deductible

d. Contractor and all Subcontractors of all tiers shall be additional insureds.
e. Excluded property: Equipment, tools, and personal effects belonging to Contractor or Subcontractors of all tiers.
f. Insured perils: All Risks of Direct Physical Damage or Loss, including flood and, for scheduled locations, earthquake, except as excluded.
g. Exclusions may include, but are not limited to:
   1) Loss due to wear and tear, moth, vermin, termites, insects, latent defects, gradual deterioration, wet or dry rot, rust, corrosion, erosion or normal settling, shrinkage and/or expansion of buildings or foundations.
   2) Loss or damage due to contaminants and/or pollutants. However, fire losses arising directly or indirectly from pollutants or contaminants are covered.
   3) Loss of use or occupancy or consequential loss.
   4) Liquidated damages and/or penalties for delay or detention in connection with guarantees of performance or efficiency.
   5) Loss or damage caused by or resulting from infidelity or dishonesty on the part of any insured or the employees or agents of any insured.
   6) Inventory shortage or unexplained disappearance.
h. A copy of Owner's Course of Construction Insurance, including all policy coverages, conditions and exclusions, shall control in the event of any conflict with the language of this Document 00800. Upon request, Owner will provide a Certificate of Property Insurance.

END OF DOCUMENT

DOCUMENT 00910

ADDENDA

Sonoma Tanks Fence Replacement

[DOCUMENT TO BE COMPLETED AS ADDENDA DURING BID PERIOD]

END OF DOCUMENT

SPECIFICATIONS

DIVISION 1

GENERAL REQUIREMENTS

SECTION 01100

SUMMARY

PART 1 GENERAL

1.1 SUMMARY

A. Section includes:
   1. Summary of Work and Work Restrictions including:
      a. Summary
      b. Work Covered By Contract Documents
      c. Bid Items, Allowances, and Alternates
      d. Work Under Other Contracts
      e. Future Work
      f. Work Sequence
      g. Work Days and Hours
      h. Shutdown for Discovery of Cultural Resources
      i. Contractor Use of Site
      j. Air Quality Standards
      k. Construction Staking and Monument Protection
      l. Protection of Existing Structures and Underground Facilities
      m. Permits
      n. Rights-of-Way
      o. Document Tracking
      p. Products Ordered In Advance
      q. Owner-Furnished Products

1.2 WORK COVERED BY CONTRACT DOCUMENTS

A. Work comprises construction of Owner's Sonoma Tanks Fence Replacement, Sonoma, California including without limitation installation and replacement of 1,400 feet of security fencing around the Sonoma Storage Tanks, wildlife pass thru's, double drive gate, walk thru gate, and appurtenances. Contract Documents fully describe the Work.
B. The Work of this Contract comprises construction of all the Work indicated, described in the Specifications, or otherwise required by the Contract Documents.
C. Unless provided otherwise in the Contract Documents, all risk of loss to Work covered by Contract Documents shall rest with Contractor until Final Acceptance of the Work.
D. Cost of maintenance of systems and equipment prior to Final Acceptance will be considered as included in prices Bid and no direct or additional payment will be made therefore.

1.3 BID ITEMS, ALLOWANCES, AND ALTERNATES

A. Any Bid item may be deleted from the Work and Contract Sum, in total or in part, prior to or after award of Contract without compensation in any form or adjustment of other Bid items or prices therefore.
B. Payment of all items is subject to provisions of Contract Documents, including without limitation Section 01200 (Price and Payment Procedures).
C. For all Bid items, furnish and install all Work, including connections to existing systems, indicated and described in Specifications and all other Contract Documents. Work and requirements applicable to each individual Bid item, or unit of Work, shall be deemed incorporated into the description of each Bid item (whether Lump Sum or Unit Price).

D. Bid item descriptions (listed by Bid item number):
   1. Bonds. The lump sum price paid under this item shall be full payment for furnishing bonds as required by Document 00200 (Instructions to Bidders).
   2. Insurance. The lump sum price paid under this item shall be full payment for furnishing insurance as required by Document 00700 (General Conditions).
   3. Safety Program and Implementation. The lump sum price paid under this item shall be full payment for furnishing and implementing the Safety Program as required by Section 01540 (Site Security and Safety) and Document 00700 (General Conditions).
   4. Construction Material Waste Management Plan and Implementation. The lump sum price paid under this item shall be full payment for furnishing and implementing the Construction Material Waste Management Plan as required by Section 01741 (Construction Material Waste Management Plan).
   5. Chain Link Fence and Gates. The lump price paid under this item shall be full payment for providing approximately 1,400 feet of black vinyl coated chain link fence; including fabric, tie wire, tension wire, tension straps and tension bands, line posts, corner or terminal posts, gate posts, concrete post footings and anchor blocks, double drive gate, walk thru gate, wildlife pass thru's, all associated bracing and rails, fittings, accessories and finishes; any temporary fencing; complete and in place as required by Section 02821 (Chain Link Fence and Gates) and as indicated in the Plans.
   6. Existing Fence Removal and Disposal. The lump price paid under this item shall be full payment for removal and disposal of the existing barbed-wire fence.

E. Allowances: (N/A

F. Alternates: (N/A)

1.4 WORK UNDER OTHER CONTRACTS

A. None expected

1.5 FUTURE WORK

A. None expected

1.6 WORK SEQUENCE

A. Construct Work in stages and at times to accommodate Owner operation requirements during the construction period; coordinate construction schedule and operations with Owner.

1.7 WORK DAYS AND HOURS

A. Work Days and hours: Monday-Friday inclusive, 7:00 a.m.-5:00 p.m. local time.

B. Work at the Site on weekends, holidays, or at night is not permitted, unless Contractor requests otherwise from Owner in writing at least 48 hours in advance and Owner approves in its sole discretion.

C. Contractor will not be permitted to schedule utility shutdowns on Fridays.

1.8 SHUTDOWN FOR DISCOVERY OF CULTURAL RESOURCES

A. If discovery is made of items of historical, archaeological, or paleontological interest, immediately cease all Work in the area of discovery. Archaeological indicators may include, but are not limited to, dwelling sites, locally darkened soils, stone implements or other artifacts, fragments of glass or ceramics, animal bones, human bones, and fossils. After cessation of excavation, immediately contact Owner. Do not resume Work until

authorization is received from Owner. When resumed, excavation or other activities shall be as directed by Owner.

1.9 CONTRACTOR USE OF SITE

A. Confine operations at Site to areas permitted by Contract Documents, permits, ordinances, and laws.
B. Do not unreasonably encumber Site with materials or equipment.
C. Assume full responsibility for protection and safekeeping of products stored on premises.
D. Move any stored products that interfere with operations of Owner or other contractor.
E. Coordinate parking, storage, staging, and Work areas with Owner.
F. Owner will provide a storage area for Contractor's equipment and materials.
G. Do not store construction materials in the Drip line of any tree.
H. Access is available to the Site from First Street West along the route indicated.
I. Owner will provide a combination lock to Contractor. Insert lock in series and ensure that the entrance is locked at the end of each work day and at other times as may be necessary to control unauthorized entry.

1.10 AIR QUALITY STANDARDS

A. Ensure that idling time for all heavy equipment is minimized to reduce on-Site emissions.
B. Maintain equipment in good mechanical condition.
C. Cover trucks hauling dirt.
D. Limit dust emissions during periods of high winds (greater than 15 miles per hour).
E. Replace ground cover in disturbed areas as soon as possible.
F. Enclose, cover, water, or apply soil binders to exposed stockpiles.
G. Remove earth tracked onto neighboring paved roads at least once daily.
H. Limit equipment speed to 10 miles per hour in unpaved areas.

1.11 CONSTRUCTION STAKING AND MONUMENT PROTECTION

A. Owner will provide construction staking and other surveying, mapping, or computational activities that Owner deems necessary in its sole judgment, including that which may be used by the Owner to determine pay quantities, or other elements required by or provided for in the Contract Documents.
B. Contractor shall be responsible at its sole expense and direction for construction layout activities (as defined by Owner in its sole and exclusive judgment) and any surveying and/or mapping activities beyond that which will be performed by Owner in accordance with Paragraph A above, including that which may be required to establish and/or document as-built locations, alignments, elevations, grades or quantities required by or provided for in the Contract Documents.
C. Contractor shall be required to prepare and submit to Owner, not less than five Business Days before the Preconstruction Meeting, a Construction Staking Outline consisting of completed draft Construction Survey Request forms detailing the scope, extent, and anticipated schedule of the construction staking proposed by Contractor for each phase of the work and separate Construction Survey Request to be submitted by Contractor during the course of the contract. Owner will review Contractor’s Construction Staking Outline and notify Contractor of required changes, modifications, or deletions to the Construction Staking Outline prior to commencement of Work.
D. Construction staking will be provided in accordance with the approved Construction Staking Outline. Modifications and alterations to the Construction Staking Outline must be submitted and approved by Owner not less than five Business Days in advance of the

requested date that construction survey activities are to begin (see Construction Survey Request: Requested Start Date). Owner reserves the right to reject, require modification and/or deletions to any such subsequent submittal prior to acceptance.

E. Contractor shall be responsible at its sole expense to ready the area required for construction survey activities prior to the arrival of Owner's survey crews on Site. For the purposes of construction surveying activities, readying includes clearing, grubbing and ensuring that the area required for construction surveys is clear of obstacles, debris, materials, equipment or hazards that would unreasonably interfere with or impede Owner's ability in Owner's reasonable judgment, to productively and effectively provide the construction survey requested, establish reliable, stable, survey points and stakes or markings on the ground. Owner reserves the right to delay, discontinue, or suspend construction surveys in areas and situations that in the sole judgment of Owner, are not sufficiently readied for such surveys. Owner is not responsible for delays resulting from the areas required for construction survey activities not being sufficiently readied prior to survey crew's arrival on Site.

F. Contractor is responsible at its sole expense to provide traffic control for construction surveying activities, and shall coordinate with Owner to ensure sufficient traffic control and or safety measures are in place, prior to the arrival of the survey crew on Site. Owner reserves the right to delay, discontinue or suspend construction surveys in areas and situations that in the sole judgment of Owner lack sufficient traffic control and/or safety measures to safely, productively and efficiently accommodate construction survey activities. Owner is not responsible for delays resulting from the areas required for construction survey activities lacking sufficient traffic control and/or safety measures in place prior to survey crew's arrival on Site.

G. Construction Survey Request(s) shall be submitted by Contractor not less than five Business Days prior to the date that the Site will be readied for construction surveying activities (hereafter referred to as the advanced notice period for Construction Survey Request(s)). Scheduling or time changes for a previously accepted Construction Survey Request shall be submitted to Owner not less than two Business Days in advance of the date that the Site will be readied. Requests submitted after 12:00 noon will be held over to the next Business Day for the purposes of beginning the advanced notice period for Construction Survey Requests.

H. Contractor is responsible to ensure that sufficient time is allowed to meet the advanced notice period for Construction Survey Request(s) requirements, to perform Site preparation requirements outlined above, to accommodate Owner's scheduling and resource availability, and for the Owner to complete construction survey activities. Contractor shall coordinate with Owner well in advance of the anticipated need, to ensure that sufficient resources are available to complete the construction surveys requested. No extension of time will be granted for delays resulting from construction survey activities.

I. Contractor shall not begin work on any element of construction until construction staking or related survey activity associated with a Construction Survey Request submitted by the Contractor has been completed. For the purposes of this section: Completion of construction staking or related survey activity shall be determined by Owner. Contractor will be notified by Owner.

J. Contractor shall protect and preserve stakes set by Owner in accordance with the above. Contractor shall be responsible at its sole expense for re-staking or verification of survey stakes, cut/fills or markings that are damaged, destroyed or otherwise made un-useful/reliable by activities within its control in the reasonable judgment of Owner. Owner will provide replacement stakes or verification surveys requested by Contractor at

Contractor's expense in accordance with normal staff rates and charges associated with personnel, equipment and materials required to perform such activities.

K. Whenever Contractor knows or reasonably should know that any Work or construction-related activity required under this Contract may, or is likely to damage, destroy or cause any property or right of way monument(s), survey control point(s), or Bench Marks to become unusable, Contractor shall notify Owner a minimum of five Business Days in advance of such work or activity. Owner will reference property or right of way monument(s) and survey control point(s) by survey, swing ties, or other appropriate means prior to their disturbance or destruction. Owner will replace or restore as appropriate property or right of way monuments and survey control point(s) disturbed, destroyed or otherwise made un-useful by Contractor's activities upon completion of the construction activities.

L. Contractor shall protect and preserve property or right of way monuments and survey control points, and shall be responsible at its sole expense for the cost replacing or restoring damaged or destroyed property or right of way monuments and survey control points, including the cost of preparing and filing a Corner Record or Record of Survey when required under Sec. 8771(b) of the Business and Professions Code of the State of California where sufficient notification to Owner was not provided in accordance with the above. Owner will perform such Surveying and Mapping activities required in Owner's sole judgment, to restore or replace property or right of way monuments and survey control point(s) disturbed, destroyed or otherwise made un-useful by Contractor's activities and required to comply Sec. 8771(b) of the Business and Professions Code of the State of California, in accordance with staff rates and charges in effect for the associated personnel, equipment and materials required to perform such activities.

1.12 PROTECTION OF EXISTING STRUCTURES AND UNDERGROUND FACILITIES

A. The Drawings may indicate existing above- and below-grade structures, drainage lines, storm drains, sewers, water lines, gas lines, electrical lines, and other similar items and Underground Facilities that are known to Owner.

1. At least 2 Business Days, or as otherwise noted, prior to commencement of excavation, notify the owners of the following Underground Facilities:

Water lines:	Water Agency, Service Center, Phone: (707) 523-1070
Water lines:	City of Sonoma Public Works, Phone: (707) 938-3332

B. Where overhead service to a structure, known to receive service, does not exist, then underground service shall be assumed to exist.

C. Perform potholing using hand or mechanical vacuum methods within 24 inches (in any direction) of the Underground Facilities. This may be done on an area-by-area basis, but shall be accomplished at least 7 Days in advance of the date of construction within such area.

D. In addition to reporting, if a utility is damaged, Contractor shall take appropriate action as provided in Document 00700 (General Conditions).

E. Additional compensation or extension of time on account of utilities not indicated or otherwise brought to Contractor's attention including reasonable action taken to protect or repair damage shall be determined as provided in Document 00700 (General Conditions).

1.13 PERMITS

A. No permits are known to apply to the Work.

1.14 RIGHTS-OF-WAY

A. Owner has obtained authorization to perform Work within the City of Sonoma and the Sonoma County Agricultural Preservation and Open Space District's property.

1.15 DOCUMENT TRACKING

A. Owner maintains a computerized document control system to monitor the generation, status, and filing of documents. Documents such as, but not limited to, Contracts, Cost Proposals, Change Orders (proposed and approved), Meeting Minutes, Schedules and Reports, Payment Applications, certificates of insurance, Safety Reports, Requests for Information, Requests for Substitutions, correspondence, communications, notices, Submittals, transmittals, and logs shall be submitted electronically for Owner to control the documents using the computerized system. Owner will use the computerized system to track and manage all documents on the Project, after Notice to Proceed, to the greatest extent possible.

B. Provide all Project documents to Owner in electronic format with a minimum of one hard copy, unless otherwise required by the Contract Documents. If file size prohibits electronic transmittal, submit to Owner on compact disk (CD).

C. Provide electronic format documents in searchable portable document format (PDF), unless otherwise required by the Contract Documents or directed in writing by Owner.

PART 2 PRODUCTS

2.1 PRODUCTS ORDERED IN ADVANCE

A. As provided in Section 01200 (Price and Payment Procedures), paragraph 1.5E, and subject to all other provisions of the Contract Documents, Owner will pay for the following materials and equipment prior to incorporation into the Work:
   1. Materials:
      a. None
   2. Equipment:
      a. None

2.2 OWNER-FURNISHED PRODUCTS

A. Owner-Furnished Products:
   a. None

PART 3 EXECUTION – NOT USED

END OF SECTION

SECTION 01200

PRICE AND PAYMENT PROCEDURES

PART 1 GENERAL

1.1 SUMMARY

A. Section includes:
   1. Description of requirements and procedures for determining amount of Work performed and for obtaining payment for Work performed.

1.2 REFERENCES

A. California Public Contract Code
B. Code of Civil Procedure

1.3 SCOPE OF WORK

Work under Contract Documents, or under any Bid item, allowance, or Alternate, shall include all labor, materials, taxes, transport, handling, storage, supervision, administration, and all other items necessary for the satisfactory completion of Work, whether or not expressly specified or indicated.

1.4 DETERMINATION OF QUANTITIES

Quantity of Work to be paid for under any item for which a unit price is fixed in Contract Documents shall be number, as determined by Owner, of units of Work satisfactorily completed in accordance with Contract Documents or as directed by Owner. Unless otherwise provided, determination of number of units of Work so completed will be based, so far as practicable, on actual measurement or count within prescribed or ordered limits, and no payment will be made for Work done outside of limits. Measurements and computations will be made by methods set forth in Contract Documents, including without limitation this Section 01200. If methods are not so set forth, measurements shall be made in any manner which Owner considers appropriate for class of Work measured (e.g., pre-assigned values, percentage completion, units completed or incremental Milestones). Contractor must immediately inform Owner of any disputes regarding quantity measurements and shall immediately supply Owner with any documentation supporting the disputed measurements.

1.5 SCOPE OF PAYMENT

A. Except as otherwise expressly stated in Section 01100 (Summary), payment to Contractor at the unit price or other price fixed in Contract Documents for performing Work required under any item, or (if the Contract is on a single lump sum price basis) at the lump sum price fixed in the Contract Documents for performing all Work required under Contract Documents, and as either may be adjusted pursuant to any approved Change Order or Construction Change Directive, shall be full compensation for completing, in accordance with Contract Documents, all Work required under the item or under Contract Documents, and for all expense incurred by Contractor for any purpose in connection with the performance and completion of said Work, including all incidental Work necessary for completion of the Work.
B. The Contract Sum, whether lump sum, unit price or otherwise, shall be deemed to include all costs necessary to complete required Work, all costs (if any) for loss or damage arising from nature of Work or prosecution of the Work, and from action of elements. Unless

Contract Documents expressly provide otherwise, the Contract Sum shall be deemed to include:

1. Any and all costs arising from any unforeseen difficulties which may be encountered during, and all risks of any description connected with, prosecution of Work or prosecution of Bid item (whether lump sum or unit price) until acceptance by Owner;
2. All expenses incurred due to suspension, or discontinuance of Work or discontinuance of Bid item (whether lump sum or unit price) as provided in Contract Documents;
3. Escalation to allow for cost increases between time of Contract Award and completion of Work or completion of Bid item (whether lump sum or unit price).

C. Whenever it is specified herein that Contractor is to do Work or furnish materials of any class for which no price is fixed in Contract Documents, it shall be understood that Contractor is to do such Work or furnish such materials without extra charge or allowance or direct payment of any sort, and that cost of doing Work or furnishing materials is to be included in price Bid, unless it is expressly specified herein, in particular cases, that Work or material is to be paid for as extra Work.

D. Unit Prices shall apply to Work covered by unit prices so long as actual quantities performed on the Project are not less than 75 percent or greater than 125 percent of the estimated quantities contained in Document 00400 (Bid Form) or otherwise referenced in Section 01100 (Summary). If actual quantities exceed these parameters, then the unit price shall be adjusted by an amount to reflect the Contractor's incremental cost differential resulting from increased or decreased economies of scale. For quantities reduced to less than 75 percent of the estimated Bid quantity, the payment for the total pay quantity of such item of Work will in no case exceed the payment that would have been made for the performance of 75 percent of the estimated Bid quantity for such item at the original Contract unit price.

E. No payment shall be made for materials or equipment not yet incorporated into the Work, except as specified in Section 01100 (Summary).

F. For any materials and equipment referenced in Section 01100 (Summary) as subject to payment prior to incorporation into the Work, where Contractor requests payment on the basis of such materials and equipment not incorporated in the Work, Contractor must satisfy the following conditions:

1. The materials and/or equipment shall be delivered and suitably stored at the Site or at another local location agreed to in writing, for example, a mutually acceptable warehouse;
2. Full title to the materials and/or equipment shall vest in Owner at the time of delivery to the Site, warehouse or other storage location;
3. Obtain a negotiable warehouse receipt, endorsed over to Owner for materials and/or equipment stored in an Off Site warehouse. No payment will be made until such endorsed receipts are delivered to Owner;
4. Stockpiled materials and/or equipment shall be available for Owner inspection, but Owner shall have no obligation to inspect them and its inspection or failure to inspect shall not relieve Contractor of any obligations under the Contract Documents. Materials and/or equipment shall be segregated and labeled or tagged to identify these specific Contract Documents;
5. After delivery of materials and/or equipment, if any inherent or acquired defects are discovered, Defective materials and/or equipment shall be removed and replaced with suitable materials and/or equipment at Contractor's expense;

6. At Contractor's expense, insure the materials and/or equipment against theft, fire, flood, vandalism, and malicious mischief, as well as any other coverages required under the Contract Documents;
7. Contractor's Application for Payment shall be accompanied by a bill of sale, invoice or other documentation warranting that Owner has received the materials and equipment free and clear of all liens and evidence that the materials and equipment are covered by appropriate property insurance and other arrangements to protect Owner's interest therein, all of which must be satisfactory to Owner. This documentation shall include, but not be limited to, conditional releases of mechanics' liens and stop notices from all those providing materials and equipment as to which the Application for Payment relates, as well as unconditional releases of the same from the same as to the previous Application for Payment for which they have not already been provided.

G. Amounts previously paid for materials and equipment prior to incorporation into the Work shall be deducted from amounts otherwise due Contractor as they are incorporated.

1.6 BASIS OF PAYMENT

A. Unit Price Quantities: When estimated quantity for specific portions of Work is listed in Document 00400 (Bid Form), quantity of Work to be paid for shall be actual number of units satisfactorily completed, as determined by Owner and certified by Contractor, in accordance with Contract Documents.
B. Lump Sum: When estimated quantity for specific portion of Work is not indicated and unit is designated as lump sum, payment will be on a lump sum basis for Work satisfactorily completed in accordance with Contract Documents.
C. Allowances: Allowance items (if any) will be paid for as provided in Section 01100 (Summary). Funds authorized for Allowance Work will not be released for Contract payments unless Owner has authorized Allowance Work in writing.
D. Owner does not expressly, or by implication, agree, warrant, or represent in any manner, that actual amount of Work will correspond with amount shown or estimated and reserves right to increase or decrease amount of any class or portion of Work, to leave out entire Bid item or items, or to add work not originally included in Bid or Contract Documents, when in its judgment such change is in best interest of Owner. No change in Work shall be considered a waiver of any other condition of Contract Documents. No claim shall be made for anticipated profit, for loss of profit, for damages, or for extra payment whatever, except as otherwise expressly provided for in Contract Documents, because of any differences between amount of Work actually done and estimated amount as set forth herein, or for elimination of Bid items.

1.7 PROGRESS PAYMENTS

A. Owner's General Manager is authorized to approve progress payments in conformance with Contract Documents and the Auditor/Controller of the County of Sonoma is authorized to process such payments upon their submission by the General Manager.
B. If requested by Contractor, progress payments will be made monthly.
C. Schedule of Values:
   1. Within the time set forth in Document 00700 (General Conditions), submit a detailed breakdown of Contractor's Bid by scheduled Work items and/or activities, including coordination responsibilities and Project Record Documents responsibilities. Where more than one Subcontractor comprises the work of a Work item or activity, the Schedule of Values shall show a separate line item for each subcontract. Furnish such breakdown of the total Contract Sum by assigning dollar values (cost estimates) to each

applicable Progress Schedule network activity, which cumulative sum equals the total Contract Sum. The format and detail of the breakdown shall be as directed by Owner to facilitate and clarify future progress payments to Contractor for direct Work under Contract Documents. This breakdown shall be referred to as the Schedule of Values.

2. Contractor's overhead, profit, insurance, cost of bonds (except to the extent expressly identified in a Bid item) and/or other financing, as well as "general conditions costs," (e.g., Site cleanup and maintenance, temporary roads and access, off-Site access roads, temporary power and lighting, security, and the like), shall be prorated through all activities so that the sum of all the Schedule of Values line items equals Contractor's total Contract Sum, less any allowances designated by Owner. Scheduling, record documents and quality assurance control shall be separate line items.
3. Owner will review the breakdown in conjunction with the Progress Schedule to ensure that the dollar amounts of this Schedule of Values are, in fact, fair market cost allocations for the Work items listed. Upon favorable review by Owner, Owner will accept this Schedule of Values for use. Owner shall be the sole judge of fair market cost allocations.
4. Owner will reject any attempt to increase the cost of early activities, i.e., "front loading," resulting in a complete reallocation of moneys until such "front loading" is corrected. Repeated attempts at "front loading" may result in suspension or termination of the Work for default, or refusal to process progress payments until such time as the Schedule of Values is acceptable to Owner.

D. Monthly Report Sheets and Applications for Payment: Contractor shall establish and maintain records of cost of the Work in accordance with generally accepted accounting practices; reconcile the amount of Work completed monthly with Owner, and sign Owner's monthly report sheet certifying to the Work done. Monthly report sheets shall be considered the true record of the Cost of the Work and Contractor shall submit in a form acceptable to Owner an itemized cost breakdown of Contractor's record of Cost of the Work together with supporting data and any certification required by Owner. In addition:

1. On or before the 20th Day of each month, Owner and Contractor will reconcile any differences in the field, based on the reconciled monthly report sheets, and Contractor shall submit to Owner an Application for Payment for the cost of the Work put in place during the period from the 15th Day of the previous month to the 15th Day of the current month, along with the Owner-approved updated Schedule. Such Applications for Payment shall be for the total value of activities completed or partially completed, including approved activity costs, based upon Schedule of Values prices (or Bid item prices if unit price) of all labor and materials incorporated in the Work up until midnight of the last Day of that one month period, less the aggregate of previous payments. Accumulated retainage shall be shown as separate item in payment summary. If Contractor is late submitting its Application for Payment, that Application may be processed at any time during the succeeding one-month period, resulting in processing of Contractor's Application for Payment being delayed for more than a Day for Day basis.
2. Applications for Payment may include, but are not necessarily limited to the following:
   a. Material, equipment, and labor incorporated into the Work, less any previous payments for the same.
   b. Up to 75 percent of the cost of equipment identified in paragraph 1.5F of this Section 01200 (if any), if purchased and delivered to the Site or stored off Site, as may be approved by Owner.

c. Up to 50 percent of the cost of materials identified in paragraph 1.5F of this Section 01200 (if any), specifically fabricated for the Project that are not yet incorporated into the Work.

3. At the time any Application for Payment is submitted, certify in writing the accuracy of the Application and that Contractor has fulfilled all scheduling requirements of Document 00700 (General Conditions), including updates and revisions. A responsible officer of Contractor shall execute the certification.
4. No progress payment will be processed prior to Owner receiving all requested, acceptable schedule update information. Failure to submit a schedule update justifies denying the entire Application for Payment, or in Owner's discretion withholding amounts as described in paragraph 1.7E.10 of this Section 01200.
5. Each Application for Payment shall list each Change Order and Construction Change Directive ("CCD") executed prior to date of submission, including the Change Order/CCD Number, and a description of the Work activities, consistent with the descriptions of original Work activities. Submit a monthly Change Order/CCD status log to Owner.
6. If Owner requires substantiating data, submit information requested by Owner, with cover letter identifying Project, Application for Payment number and date, and detailed list of enclosures.
7. If Contractor fails or refuses to participate in monthly Work reconciliations or other construction progress evaluation with Owner, Contractor shall not receive current payment until Contractor has participated fully in providing construction progress information and schedule update information to Owner.

E. Progress Payments

1. Owner will review Contractor's Application for Payment following receipt. If adjustments need to be made to percent of completion of each activity, Owner will make appropriate notations and return to Contractor. Contractor shall revise and resubmit. All parties shall update percentage of completion values in the same manner, i.e., express value of an accumulated percentage of completion to date.
2. Each Application for Payment may be reviewed by Owner and/or inspectors to determine whether the Application for Payment is proper, and shall be rejected, revised, or approved by Owner pursuant to the Schedule of Values prepared in accordance with paragraph 1.7C of this Section 01200.
3. If it is determined that the Application for Payment is not proper and suitable for payment, Owner will return it to the Contractor as soon as practicable, but no later than seven Days after receipt, together with a document setting forth in writing the reasons why the Application for Payment is not proper. If Owner determines that portions of the Application for Payment are not proper or not due under the Contract Documents, then Owner may approve the other portions of the Application for Payment, and in the case of disputed items or Defective Work not remedied, may withhold up to 150 percent of the disputed amount from the progress payment.
4. Pursuant to California Public Contract Code Section 20104.50, if Owner fails to make any progress payment within 30 Days after receipt of an undisputed and properly submitted Application for Payment from Contractor, Owner shall pay interest to the Contractor equivalent to the legal rates set forth in subdivision (a) of Section 685.010 of the Code of Civil Procedure. The 30-Day period shall be reduced by the number of Days by which Owner exceeds the seven-Day return requirement set forth herein.

5. As soon as practicable after approval of each Application for Payment for progress payments, Owner will pay to Contractor in manner provided by law, an amount equal to 95 percent of the amounts otherwise due as provided in the Contract Documents, or a lesser amount if so provided in Contract Documents, provided that payments may at any time be withheld if, in judgment of Owner, Work is not proceeding in accordance with Contract, or Contractor is not complying with requirements of Contract, or to comply with stop notices or to offset liquidated damages accruing or expected.
6. Before any progress payment or final payment is due or made, Contractor shall submit satisfactory evidence that Contractor is not delinquent in payments to employees, Subcontractors, suppliers, or creditors for labor and materials incorporated into Work. This specifically includes, without limitation, conditional lien release forms for the current progress payment and unconditional release forms for past progress payments.
7. Owner reserves and shall have the right to withhold payment for any equipment and/or specifically fabricated materials that, in the sole judgment of Owner, are not adequately and properly protected against weather and/or damage prior to or following incorporation into the Work.
8. Granting of progress payment or payments by Owner, or receipt thereof by Contractor, shall not be understood as constituting in any sense acceptance of Work or of any portion thereof, and shall in no way lessen liability of Contractor to replace unsatisfactory Work or material, though unsatisfactory character of Work or material may have been apparent or detected at time payment was made.
9. When Owner shall charge sum of money against Contractor under any provision of Contract Documents, amount of charge shall be deducted and retained by Owner from amount of next succeeding progress payment or from any other moneys due or that may become due Contractor under Contract. If, on completion or termination of Contract, such moneys due Contractor are found insufficient to cover Owner's charges against it, Owner shall have right to recover balance from Contractor or Sureties.
10. If Contractor fails to submit an acceptable Progress Schedule update, or fails to bring an acceptable Project Record Drawings update to Progress Payment Meeting, Owner may retain 5% of each Progress Payment amount thereafter (in addition to any other retention) until Owner's acceptance of a Progress Schedule or Project Record Drawings update. This retention shall apply cumulatively.

1.8 FINAL PAYMENT

A. As soon as practicable after all required Work is completed in accordance with Contract Documents, including punchlist, testing, record documents and Contractor maintenance after Final Acceptance, Owner will pay to Contractor, in manner provided by law, unpaid balance of Contract Sum of Work (including without limitation retentions), or whole Contract Sum of Work if no progress payment has been made, determined in accordance with terms of Contract Documents, less sums as may be lawfully retained under any provisions of Contract Documents or by law.
B. Prior progress payments shall be subject to correction in the final payment. Owner's determination of amount due as final payment shall be final and conclusive evidence of amount of Work performed by Contractor under Contract Documents and shall be full measure of compensation to be received by Contractor.
C. Contractor and each assignee under an assignment in effect at time of final payment shall execute and deliver at time of final payment, and as a condition precedent to final payment, Document 00650 (Agreement and Release of Any and All Claims).

1.9 EFFECT OF PAYMENT

A. Payment will be made by Owner, based on Owner's observations at the Site and the data comprising the Application for Payment. Payment will not be a representation that Owner has:
   1. Made exhaustive or continuous on-Site inspections to check the quality or quantity of Work;
   2. Reviewed construction means, methods, techniques, sequences, or procedures;
   3. Reviewed copies of requisitions received from Subcontractors and material suppliers and other data requested by Owner to substantiate Contractor's right to payment; or
   4. Made examination to ascertain how or for what purpose Contractor has used money previously paid on account of the Contract Sum.

PART 2 PRODUCTS – NOT USED

PART 3 EXECUTION – NOT USED

END OF SECTION

SECTION 01250

MODIFICATION PROCEDURES

PART 1 GENERAL

1.1 SUMMARY

A. Section includes:
   1. Description of general procedural requirements for alterations, Modifications, and extras.

1.2 GENERAL

A. Any change in scope of Work or deviation from Contract Documents including, without limitation, extra Work, or alterations or additions to or deductions from the original Work, shall not invalidate the original Contract, and shall be performed under the terms of the Contract Documents.
B. Only Contractor or Owner may initiate changes in scope of Work or deviation from Contract Documents.
   1. Contractor may initiate changes by submitting RFIs, Notice of Differing Site Conditions, or Notice of Hazardous Waste or Materials Conditions.
      a. RFIs shall be submitted to seek clarification of or request changes in the Contract Documents.
      b. Notices of Differing Site Conditions shall be submitted in accordance with Document 00700 (General Conditions).
      c. Notices of Hazardous Waste or Materials Conditions shall be submitted in accordance with Document 00700 (General Conditions).
   2. Contractor shall be responsible for its costs to implement and administer RFIs throughout the Contract duration. Regardless of the number of RFIs submitted, Contractor shall not be entitled to additional compensation for administrative costs. Contractor shall be responsible for both Owner and its Engineer's administrative costs for answering RFIs where the answer could reasonably be found by reviewing the Contract Documents, as determined by Owner; at Owner's discretion, such costs may be deducted from progress payments or final payment.
   3. Owner may initiate changes by issuing a Supplemental Instruction, which may revise, add to or subtract from the Work.
   4. Owner may initiate changes in the Work or Contract Time by issuing RFPs to Contractor. Such RFPs will detail all proposed changes in the Work and request a quotation of changes in Contract Sum and Contract Time from Contractor.
   5. Owner may also, by Construction Change Directive ("CCD"), order changes in the Work within the general scope of the Contract consisting of additions, deletions, or other revisions, the Contract Sum and Contract Time being adjusted accordingly. A CCD shall be used in the absence of total agreement on the terms of a Change Order and may, upon notice, consist of a Change Order executed by Owner only.

1.3 PROCEDURES

A. Cost Proposal and Procedures: Whenever Contractor is required in this Section 01250 to prepare a Cost Proposal, and whenever Contractor is entitled to submit a Cost Proposal and elects to do so, Contractor shall prepare and submit to Owner for consideration a Cost Proposal using the form attached to this Section 01250. All Cost Proposals must contain a

complete breakdown of costs of credits, deducts, and extras; and itemizing materials, labor, taxes, overhead and profit. All Subcontractor Work shall be so indicated. Individual entries on the Cost Proposal form shall be determined as provided in paragraphs 1.4 and 1.5 of this Section 01250. After receipt of a Cost Proposal with a detailed breakdown, Owner will act promptly thereon.

1. If Owner accepts a Cost Proposal, Owner will prepare Change Order for Owner and Contractor signatures.
2. If Cost Proposal is not acceptable to Owner because it does not agree with cost and/or time included in Cost Proposal, Owner will submit in a response what it believes to be a reasonable cost and/or adjustment, if any. Except as otherwise provided in this Section 01250, Contractor shall have seven Days in which to respond to Owner with a revised Cost Proposal.
3. When necessity to proceed with a change does not allow the Owner sufficient time to conduct a proper check of a Cost Proposal (or revised Cost Proposal), Owner may order Contractor to proceed on basis to be determined at earliest practical date. In this event, value of change, with corresponding equitable adjustment to Contract, shall not be more than increase or less than decrease proposed.

B. Request for Information (RFI): Whenever Contractor requires information regarding the Project or Contract Documents, or receives a request for information from a Subcontractor, Contractor may prepare and deliver an RFI to Owner, using the Contractor interface for Owner's project management software. Contractor must submit time critical RFIs at least 10 Days before scheduled start date of the affected Work activity. Contractor shall reference each RFI to an activity of Progress Schedule and shall note time criticality of the RFI, indicating time within which a response is required. Contractor's failure to reference RFI to an activity on the Progress Schedule and note time criticality on the RFI shall constitute Contractor's waiver of any claim for time delay or interruption to the Work resulting from any delay in responding to the RFI.

1. Owner will respond within 15 Days from receipt of RFI with a written response to Contractor. Contractor shall distribute response to all appropriate Subcontractors.
2. If Contractor is satisfied with the response and does not request change in Contract Sum or Contract Time, then the response shall be executed without a change.
3. If Contractor believes the response is incomplete, Contractor shall issue another RFI to Owner clarifying original RFI. Additionally, Owner may return RFI requesting additional information should original RFI be inadequate in describing condition.
4. If Contractor believes that the response results in change in Contract Sum or Contract Time, Contractor shall notify Owner in writing within 15 Days after receiving the response. If Owner disagrees with Contractor, then Contractor may give notice of intent to submit a Claim as described in Article 12 of Document 00700 (General Conditions), and submit its Claim within 30 Days. If Owner agrees with Contractor, then Contractor must submit a Cost Proposal within 21 Days of receiving the response to the RFI. Contractor's failure to deliver either the foregoing notice and Claim or Cost Proposal by the respective deadlines stated in the foregoing sentences shall result in waiver of the right to file a Cost Proposal or Claim.

C. Supplemental Instruction: Owner may issue Supplemental Instruction to Contractor.

1. If Contractor is satisfied with Supplemental Instruction and does not request change in Contract Sum or Contract Time, then Supplemental Instruction shall be executed without a Change Order.

2. If Contractor believes that Supplemental Instruction results in change in Contract Sum or Contract Time, then Contractor must submit a Cost Proposal to Owner within 21 Days of receiving the Supplemental Instruction.

D. Construction Change Directives: If at any time Owner believes in good faith that a timely Change Order will not be agreed upon using the foregoing procedures, Owner may issue a CCD with its estimated cost and/or time adjustment. Upon receipt of CCD, Contractor shall promptly proceed with the change of Work involved and concurrently respond to Owner's CCD within 10 Days.
   1. Contractor's response must be any one of following:
      a. Return CCD signed, thereby accepting Owner's response, time, and cost.
      b. Submit a (revised if applicable) Cost Proposal with supporting documentation (if applicable, reference original Cost Proposal number followed by letter A, B, etc. for each revision), if Owner so requests.
      c. Give notice of intent to submit a Claim as described in Article 12 of Document 00700 (General Conditions), and submit its Claim within 30 Days.
   2. If the CCD provides for an adjustment to the Contract Sum, the adjustment shall be based on one of the following methods:
      a. Mutual acceptance of a lump sum properly itemized and supported by sufficient substantiating data to permit evaluation.
      b. Unit prices stated in the Contract Documents or subsequently agreed upon.
      c. Cost to be determined in a manner agreed.
   3. CCD signed by Contractor indicates the agreement of Contractor therewith, including adjustment in Contract Sum and Contract Time or the method for determining them. Such agreement shall be effective immediately and shall be recorded as a Change Order.
   4. If Contractor does not respond promptly or disagrees with the method for adjustment in the Contract Sum, the method and the adjustment shall be determined by Owner on the basis of reasonable expenditures and savings of those performing the Work attributable to the change including, in case of an increase in the Contract Sum, a reasonable allowance for overhead and profit. If the parties still do not agree on the price for a CCD, Contractor may file a Claim per Article 12 of Document 00700 (General Conditions). Contractor shall keep and present, in such form as Owner may prescribe, an itemized accounting together with appropriate supporting data. Unless otherwise provided in the Contract Documents, costs for the purposes of this paragraph shall be limited to those provided in paragraphs 1.4 and 1.5 of this Section 01250.
   5. Pending final determination of cost to Owner, amounts not in dispute may be included in Applications for Payment. The amount of credit to be allowed by Contractor to Owner for a deletion or change that results in a net decrease in the Contract Sum shall be actual net cost as confirmed by Owner. When both additions and credits covering related Work or substitutions are involved in a change, the allowance for overhead and profit shall be figured on the basis of net increase, if any, with respect to that change.

E. Owner Requested RFP: Contractor shall furnish a Cost Proposal within 21 Business Days of Owner's RFP. Upon approval of Cost Proposal, Owner will issue a Change Order directing Contractor to proceed with extra Work. If the parties do not agree on the price, Owner may either issue a CCD or decide the issue per Article 12 of Document 00700 (General Conditions). Contractor shall perform the changed Work notwithstanding any claims or disagreements of any nature.

F. Differing Site Conditions: Contractor shall submit Notices of Differing Site Conditions to resolve problems regarding differing underground Site conditions encountered in the

execution of the Work pursuant to paragraph 13.4 of Document 00700 (General Conditions), which shall govern. If Owner determines that a change in Contract Sum or Contract Time is justified, Owner will issue RFP or CCD.

G. Hazardous Waste Conditions: Contractor shall submit Notices of Hazardous Waste or Materials Conditions to resolve problems regarding hazardous materials encountered in the execution of the Work pursuant to paragraph 13.5 of Document 00700 (General Conditions), which shall govern. If Owner determines that a change in Contract Sum or Contract Time is justified, Owner will issue RFP or CCD.

H. All Changes:
   1. Documentation of Change in Contract Sum and Contract Time:
      a. Contractor shall maintain detailed records of Work performed on a time-and-material basis.
      b. Contractor shall document each proposal for a change in cost or time with sufficient data to allow evaluation of the proposal.
      c. Contractor shall, on request, provide additional data to support computations for:
         1) Quantities of products, materials, labor, and equipment.
         2) Taxes.
         3) Justification for any change in Contract Time and new Progress Schedule showing revision due, if any.
         4) Credit for deletions from Contract, similarly documented.
      d. Contractor shall support each claim for additional costs, and for Work performed on a cost-and-percentage basis, with additional information including:
         1) Credit for deletions from Contract, similarly documented.
         2) Origin and date of claim.
         3) Dates and times Work was performed and by whom.
         4) Time records and wage rates paid.
         5) Invoices and receipts for products, materials, equipment, and subcontracts, similarly documented.

I. Correlation of Other Items:
   1. Contractor shall revise Schedule of Values and Application for Payment forms to record each authorized Change Order or CCD as a separate line item and adjust the Contract Sum as shown thereon prior to the next monthly pay period.
   2. Contractor shall revise the Progress Schedules prior to the next monthly pay period.
   3. Contractor shall enter changes in Project Record Documents prior to the next monthly pay period.

J. Responses: For all responses for which the Contract Documents, including without limitation this Section 01250, do not provide a specific time period, recipients shall respond within a reasonable time.

1.4 COST DETERMINATION

A. Total cost of extra Work or of Work omitted shall be the sum of labor costs, material costs, equipment rental costs, and specialist costs as defined herein plus overhead and profit as allowed herein. This limit applies in all cases of claims for extra Work, whether calculating Cost Proposals, Change Orders or CCDs, or calculating claims of all types, and applies even in the event of fault, negligence, strict liability, or tort claims of all kinds, including strict liability or negligence. Contractor may recover no other costs arising out of or connected with the performance of extra Work, of any nature. No special, incidental or consequential damages may be claimed or recovered against Owner, its representatives or agents, whether

arising from breach of Contract, negligence, or strict liability, unless specifically authorized in the Contract Documents.

B. Markup for Overhead and Profit: (Overhead shall be as defined in paragraph 1.8 of this Section 01250)
   1. Markup for overhead and profit on labor for extra Work shall not exceed 15 percent.
   2. Markup for overhead and profit on materials for extra Work shall not exceed 15 percent.
   3. Markup for overhead and profit on owner-operated equipment for extra Work shall not exceed 15 percent.
   4. Markup for overhead and profit on equipment for extra Work shall not exceed 10 percent.
   5. When extra Work is performed by a first tier Subcontractor, Contractor shall receive a 5 percent markup on Subcontractors' total costs of extra Work. First tier Subcontractor's markup on its Work shall not exceed percentages listed in paragraphs 1.4B.1, 1.4B.2, 1.4B.3, and 1.4B.4 immediately above.
   6. When extra Work is performed by a lower tier Subcontractor, Contractor, first tier Subcontractors, and lower tier Subcontractors shall divide (as mutually agreed) a total of 5 percent markup on the lower tier Subcontractors' total costs of extra Work.
   7. Notwithstanding the foregoing, in no case shall the total markup on any extra Work exceed 20 percent of the direct cost, notwithstanding the actual number of Contract tiers.
   8. On proposals covering both increases and decreases in Contract Sum, markup for overhead and profit shall be included on the net amount as determined in this paragraph 1.4.
   9. The markup shall include profit, small tools, cleanup, engineering, supervision, warranties, cost of preparing the cost proposal, jobsite overhead, and home office overhead.

C. Taxes:
   1. All State sales tax, use tax, and Sonoma County and applicable City sales taxes shall be included.
   2. Federal and Excise tax shall not be included.

D. Owner-Operated Equipment: When owner-operated equipment is used to perform extra Work, Contractor will be paid as follows:
   1. Payment for cost of equipment will be made at no more than rates of such equipment established in paragraph 1.5C of this Section 01250.
   2. Payment for cost of labor will be made at no more than rates of such labor established by collective bargaining agreements for type of worker and location of Work, whether or not owner-operator is actually covered by such an agreement.
   3. Invoices for owner-operated equipment need not itemize labor and equipment costs, unless specifically requested by Owner. In any event, the total rate for owner-operated equipment shall not exceed the combined rates for labor and equipment listed in paragraphs 1.4D.1 and 1.4D.2 above.

E. Accord and Satisfaction: Every Change Order and accepted CCD shall constitute a full accord and satisfaction, and release, of all Contractor (and if applicable, Subcontractor) claims for additional time, money or other relief arising from or relating to the subject matter of the change including, without limitation, impacts of all types, cumulative impacts, inefficiency, overtime, delay, and any other type of claim. Contractor may elect to reserve its rights to disputed claims arising from or relating to the changed Work at the time it signs a Change Order or accepts a CCD, but must do so expressly in a writing delivered concurrently with the executed Change Order or approved CCD, and must also submit a

Claim for the reserved disputed items pursuant to Article 12 of Document 00700 (General Conditions) no later than 30 Days of Contractor's first written notice of its intent to reserve rights.

1.5 COST BREAKDOWN

A. Labor: Contractor will be paid cost of labor for workers (including forepersons when authorized by Owner) used in actual and direct performance of extra Work. Labor rate, whether employer is Contractor, Subcontractor or other forces, will be sum of following:
   1. Actual Wages: Actual wages paid shall include any employer payments to or on behalf of workers for health and welfare, pension, vacation, and similar purposes.
   2. Labor surcharge: Payments imposed by local, county, state, and federal laws and ordinances, and other payments made to, or on behalf of, workers, other than actual wages as defined in paragraph 1.5A.1 of this Section 01250, such as taxes and insurance. Labor surcharge shall be and shall not exceed that set forth in Caltrans official labor surcharges schedule which is in effect on date upon which extra Work is accomplished and which schedule is incorporated herein by reference as though fully set forth herein.

B. Material: Only materials furnished by Contractor and necessarily used in performance of extra Work will be paid for. Cost of such materials will be cost, including sales tax, to purchaser (Contractor, Subcontractor or other forces) from supplier thereof, except as the following are applicable:
   1. If cash or trade discount by actual supplier is offered or available to purchaser, it shall be credited to Owner notwithstanding fact that such discount may not have been taken.
   2. For materials salvaged upon completion of extra Work, salvage value of materials shall be deducted from cost, less discounts, of materials.
   3. If cost of a material is, in opinion of Owner, excessive, then cost of material shall be deemed to be lowest current wholesale price at which material is available in quantities concerned delivered to Site, less any discounts as provided in paragraph 1.5B.1 of this Section 01250.

C. Equipment: For Contractor- or Subcontractor-owned equipment, payment will be made at rental rates listed for equipment in Caltrans official equipment rental rate schedule which is in effect on date upon which extra Work is accomplished and which schedule is incorporated herein by reference as though fully set forth herein. If there is no applicable rate for an item of equipment, then payment shall be made for Contractor- or Subcontractor-owned equipment at rental rate listed in the most recent edition of the Association of Equipment Distributors (AED) book. For rented equipment, payment will be made based on actual rental invoices. Equipment used on extra Work shall be of proper size and type. If, however, equipment of unwarranted size or type and cost is used, cost of use of equipment shall be calculated at rental rate for equipment of proper size and type, as determined by Owner. Rates paid shall be deemed to cover cost of fuel, oil, lubrication, supplies, small tools, necessary attachments, repairs and maintenance of any kind, depreciation, storage, insurance, and all incidentals. Unless otherwise specified, manufacturer's ratings, and manufacturer-approved modifications, shall be used to classify equipment for determination of applicable rates. Individual pieces of equipment or tools not listed in said publication and having a replacement value of $100 or less, whether or not consumed by use, shall be considered to be small tools and no payment will be made therefor as payment is included in payment for labor. Payment will not be made for time in which equipment is inoperative due to breakdowns.

1. For Contractor or Subcontractor –owned equipment on Site, payment for equipment use will be for time equipment is in operation on extra Work being performed or on standby as approved by Owner.
2. For rented equipment on Site, the following shall be used in computing rental time of equipment:
   a. When hourly rates are listed, less than 30 minutes of operation shall be considered to be ½ hour of operation.
   b. When daily rates are listed, less than four hours of operation shall be considered to be ½ Day of operation.
3. For equipment that must be brought to Site to be used exclusively on extra Work, cost of transporting equipment to Site and its return to its original location shall be determined as follows:
   a. Owner will pay for costs of loading and unloading equipment.
   b. Cost of transporting equipment in low bed trailers shall not exceed hourly rates charged by established haulers.
   c. Cost of transporting equipment shall not exceed applicable minimum established rates of California Public Utilities Commission.
   d. Owner will not make any payment for transporting and loading and unloading equipment if equipment is used on Work in any other way than upon extra Work.
4. For rented equipment, rental period may begin at time equipment is unloaded at Site of extra Work and terminate at end of the performance of the extra Work or Day on which Owner directs Contractor to discontinue use of equipment, whichever first occurs. Excluding Saturdays, Sundays, and Owner's legal holidays, unless equipment is used to perform extra Work on such Days, rental time to be paid per Day shall be four hours for zero hours of operation, six hours for four hours of operation and eight hours for eight hours of operation, time being prorated between these parameters. Hours to be paid for equipment that is operated less than eight hours due to breakdowns, shall not exceed eight less number of hours equipment is inoperative due to breakdowns.

D. Work Performed by Special Forces or Other Special Services: When Owner and Contractor, by agreement, determine that special service or item of extra Work cannot be performed by forces of Contractor or those of any Subcontractors, service or extra Work item may be performed by specialist. Invoices for service or item of extra Work on basis of current market price thereof may be accepted without complete itemization of labor, material, and equipment rental costs when it is impracticable and not in accordance with established practice of special service industry to provide complete itemization. In those instances wherein Contractor is required to perform extra Work necessitating a fabrication or machining process in a fabrication or machine shop facility away from Site, charges for that portion of extra Work performed in such facility may, by agreement, be accepted as a specialist billing. Owner must be notified in advance of all off-Site Work. In lieu of overhead and profit provided in paragraph 1.4B of this Section 01250, 15 percent will be added to specialist invoice price, after deduction of any cash or trade discount offered or available, whether or not such discount may have been taken.

1.6 FORCE-ACCOUNT WORK

A. If it is impracticable because of nature of Work, or for any other reason, to fix an increase or decrease in price definitely in advance, the Contractor may be directed to proceed at a not-to-exceed (NTE) maximum price which shall not under any circumstances be exceeded. Subject to such limitation, such extra Work shall be paid for at actual necessary cost for

Force-Account Work or at the negotiated cost, as determined by Owner. The cost for Force-Account Work shall be determined pursuant to paragraphs 1.4 and 1.5 of this Section 01250.

B. Force-Account Work shall be used when it is not possible or practical to price out the changed Work prior to the start of that Work. In these cases, Force-Account Work will be utilized during the pricing and negotiation phase of the change. Once negotiations have been concluded and a bilateral agreement has been reached, the tracking of the Work under Force-Account is no longer necessary. Force-Account Work shall also be used when negotiations between Owner and Contractor have broken apart and a bilateral agreement on the value of the changed Work cannot be reached. Owner may approve other uses of Force-Account Work.

C. Whenever any Force-Account Work is in progress, definite price for which has not been agreed on in advance, Contractor shall report to Owner each Business Day in writing in detail amount and cost of labor and material used, and any other expense incurred in Force-Account Work on preceding Day, by using the Cost Proposal form attached hereto. No claim for compensation for Force-Account Work will be allowed unless report shall have been made.

D. Whenever Force-Account Work is in progress, definite price for which has not been agreed on in advance, Contractor shall report to Owner when 75 percent of the NTE amount has been expended.

E. Force-Account Work shall be paid as extra Work under this Section 01250. Methods of determining payment for Work and materials provided in this paragraph 1.6 shall not apply to performance of Work or furnishings of material that, in judgment of Owner, may properly be classified under items for which prices are otherwise established in Contract Documents.

1.7 OWNER-FURNISHED MATERIALS

A. Owner reserves right to furnish materials as it deems advisable, and Contractor shall have no claims for costs and overhead and profit on such materials.

1.8 OVERHEAD DEFINED FOR MODIFICATIONS

A. The following constitutes charges that are deemed included in overhead for all Contract Modifications, including Force-Account Work or CCD Work, whether incurred by Contractor, Subcontractors, or suppliers, and Contractor shall not invoice or receive payment for these costs separately:

1. Drawings: field drawings, Shop Drawings, as-builts, etc., including submissions of drawings
2. Routine field inspection of Work proposed
3. General superintendence
4. General administration and preparation of cost proposals, schedule analysis, Change Orders, and other supporting documentation as necessary
5. Computer services
6. Reproduction services
7. Salaries of project engineer, superintendent, timekeeper, storekeeper, and secretaries
8. Janitorial services
9. Temporary on-Site facilities:
   a. Offices
   b. Telephones
   c. Plumbing
   d. Electrical: Power, lighting

e. Platforms
f. Fencing, etc.
g. Water
h. Sanitation

10. Home office expenses
11. Insurance and Bond premiums
12. Procurement and use of vehicles and fuel used coincidentally in Work otherwise included in the Contract Documents
13. Surveying
14. Estimating
15. Protection of Work
16. Handling and disposal fees
17. Permit fees
18. Final cleanup
19. Other incidental Work

1.9 RECORDS AND CERTIFICATION

A. Force-Account (cost reimbursement) charges shall be recorded daily and summarized in Cost Proposal form attached hereto. Contractor or authorized representative shall complete and sign form each Day. Contractor shall also provide with the form: the names and classifications of workers and hours worked by each; an itemization of all materials used; a list by size, type, and identification number of equipment and hours operated; and an indication of all Work performed by specialists.

B. No payment for Force-Account Work shall be made until Contractor submits original invoices substantiating materials and specialists charges.

C. Owner shall have the right to audit all records in possession of Contractor relating to activities covered by Contractor's claims for Modification of Contract, including Force-Account Work and CCD Work.

D. Further, Owner will have right to audit, inspect, or copy all records maintained in connection with this Contract, including financial records and Escrow Bid Documents, in possession of Contractor relating to any transaction or activity occurring or arising out of, or by virtue of, the Contract. If Contractor is a joint venture, right of Owner shall apply collaterally to same extent to records of joint venture sponsor, and of each individual joint venture member. This right shall be specifically enforceable, and any failure of Contractor to voluntarily comply shall be deemed an irrevocable waiver and release of all claims then pending that were or could have been subject to the Article 12 of Document 00700 (General Conditions).

PART 2 PRODUCTS – NOT USED

PART 3 EXECUTION – NOT USED

END OF SECTION

COST PROPOSAL FORM FOLLOWS ON NEXT PAGE

COST PROPOSAL (CP)

Sonoma Tanks Fence Replacement
Contract Number 60-67-7 #2

CP Number: _____
Date: _____
In Response To _____
RFP #, etc.

To: Sonoma County Water Agency
Attention: Contract Administration/Inspection
404 Aviation Boulevard, Santa Rosa, CA 95403-9019

Subject Ref. No: _____
(for Project Manager use only)
Phone: (707) 547-1913
Fax: (707) 524-3791

From: [Insert Contractor's Name/Address]
_____
_____

This Cost Proposal is in response to the above-referenced _____ [insert RFP, etc. as applicable].
Brief description of change(s): _____
_____

ITEM DESCRIPTION	PRIME CONTR.	SUB 1	SUB 2	SUB 3	SUB 4	TOTAL
MATERIAL						
DIRECT LABOR COST						
EQUIPMENT						
Other (Specify)						
Total Cost						
Subcontractor's Markup for Overhead and Profit 15 percent						
Contractor's Markup for Overhead and Profit 15 percent (Labor and Materials)						
Contractor's Markup for Overhead and Profit 10 percent (Equipment Rental)						
Markup for Overhead and Profit to Contractor for Subcontractor's Work 5 percent						
GRAND TOTAL						
(percent of Total Cost above not including any Markup for Overhead and Profit) [Grand Total divided by Total Cost]						
REQUESTED CHANGE IN CONTRACT TIME (DAYS)						

By Contractor: _____ Signature: _____ Date: _____

SECTION 01315

PROJECT MEETINGS

PART 1 GENERAL

1.1 SUMMARY

A. Section Includes:
   1. Descriptions of the required Project meetings for the Work. These meetings include:
      a. Preconstruction Conference
      b. Progress Payment Meetings
      c. ISO Training
      d. Safety Meetings

1.2 PRECONSTRUCTION CONFERENCE

A. Owner will call for and administer Preconstruction Conference at time and place to be announced.
B. Contractor, all major Subcontractors, and major suppliers shall attend Preconstruction Conference.
C. Agenda will include, but not be limited to, the following items.
   1. Insurance
   2. Bonds
   3. Owner's ISO Program and Contractor Requirements
   4. Notice to Proceed
   5. Commencement of Contract Time
   6. Start of Work at Site
   7. Contractor's Initial and Original Schedule
   8. Submittal and RFI procedures
   9. Owner's Representative
   10. Revised/updated schedules
   11. Personnel and vehicle permit procedures
   12. Use of premises
   13. Location of the Contractor's on-Site facilities
   14. Security
   15. Housekeeping
   16. Inspection and testing procedures, on-Site and off-Site
   17. Utility shutdown procedures
   18. Control and reference point survey procedures
   19. Safety Program
   20. Jurisdictional agency requirements
   21. Other items as appropriate
D. Owner will distribute copies of minutes to attendees. Attendees shall have 7 Days to submit comments or additions to minutes. Minutes will constitute final memorialization of results of Preconstruction Conference.

1.3 PROGRESS PAYMENT MEETINGS

A. Prior to official application for Payment submission, Contractor shall meet with Inspector and/or Engineer on approximately the 20th of each month to review the Application for Payment.
   1. At this meeting, the following items will be reviewed:
      a. Percent complete
      b. Project Schedule
      c. Hard-copy updates of the Project Record Drawings (Field Set)
   2. Contractor's general superintendent shall attend these meetings.

1.4 ISO TRAINING

A. Owner will review ISO training during the preconstruction conference and as needed thereafter as additional Contractor and Subcontractor staff become active on-Site.

1.5 SPECIAL MEETINGS

A. Owner or Contractor may call special meetings by notifying all desired participants and Owner 5 Days in advance, giving reason for meeting. Special meetings may be held without advance notice in emergency situations.
B. At any time during the progress of Work, Owner shall have authority to require Contractor to attend meeting of any or all of the Subcontractors engaged in Work or in other work, and notice of such meeting shall be duly observed and complied with by Contractor.
C. Contractor shall schedule and conduct coordination meetings as necessary to discharge coordination responsibilities in Document 00700 (General Conditions). Contractor shall give Owner 5 Days written notice of coordination meetings. Contractor shall maintain minutes of coordination meetings. Attendees shall have 7 Days to submit comments or additions to minutes. Minutes will constitute final memorialization of results of coordination meetings.

1.6 SAFETY MEETINGS

A. Conduct monthly Contractor Safety Committee meetings.
B. Conduct weekly toolbox safety talks.

PART 2 PRODUCTS – NOT USED

PART 3 EXECUTION – NOT USED

END OF SECTION

SECTION 01330

SUBMITTAL PROCEDURES

PART 1 GENERAL

1.1 PROCEDURES

A. Submit at Contractor's expense the Submittals required by the Contract Documents.
B. Submit Submittals to Owner in accordance with accepted Schedule of Submittals. If no such schedule is agreed upon, then all Submittals shall be submitted within 35 Days after receipt of Notice of Award from Owner.
C. Transmit each item with the appropriate Submittal transmittal form (included at the end of this Section 01330). Where manufacturer's standard drawings or data sheets are used, they shall be marked clearly to show those portions of the data that are applicable to this Project. Inapplicable portions shall be marked out. Organize Submittals by Specification Section. Submittals containing information about more than one Specification Section will be returned for resubmittal. Submittals shall include all information requested by each Specification Section. Incomplete Submittals will be returned not reviewed by Owner.
D. The data shown on the Submittals shall be complete with respect to quantities, dimensions, specified performance and design criteria, materials, and similar data to show Owner the materials and equipment Contractor proposes to provide and to enable Owner to review the information for the limited purposes specified in this Section 01330. Submittals shall be identified clearly as to material, supplier, pertinent data such as catalog numbers and the use for which it is intended and otherwise as Owner may require to enable Owner to review the Submittal.
E. At the time of each submission, give Owner specific written notice of all variations, if any, that the Submittal may have from the requirements of the Contract Documents, and the reasons therefore. This written notice shall be in a written communication attached to the Submittal transmittal form. In addition, cause a specific notation to be made on each Submittal submitted to Owner for review and approval of each such variation. If Owner accepts deviation, Owner will note its acceptance on the returned Submittal transmittal form and, if necessary, issue appropriate Contract Modification.
F. Submittal coordination and verification is the responsibility of Contractor; this responsibility shall not be delegated in whole or in part to Subcontractors or suppliers. Before submitting each Submittal, review and coordinate each Submittal with other Submittals and with the requirements of the Work and the Contract Documents, and determine and verify:
    1. All field measurements, quantities, dimensions, specified performance criteria, installation requirements, materials, catalog numbers, and similar information with respect thereto;
    2. All materials with respect to intended use, fabrication, shipping, handling, storage, assembly, and installation pertaining to the performance of the Work; and
    3. All information relative to Contractor's sole responsibility for means, methods, techniques, sequences, and procedures of construction and safety precautions and programs incident thereto.
G. Contractor's submission to Owner of a Submittal shall constitute Contractor's representation that it has satisfied its obligations under the Contract Documents, and as set

forth immediately above in this paragraph 1.1 of this Section 01330, with respect to Contractor's review and approval of that Submittal.

H. Designation of Work "by others," if shown in Submittals, shall mean that Work will be responsibility of Contractor rather than Subcontractor or supplier who has prepared Submittals.

I. After review by Owner of each Submittal, an electronic copy of each Submittal will be returned to Contractor with actions defined as follows:
   1. NO EXCEPTIONS TAKEN - Accepted subject to its compatibility with future Submittals and additional partial Submittals for portions of the Work not covered in this Submittal. Does not constitute approval or deletion of specified or required items not shown on the Submittal.
   2. MAKE CORRECTIONS NOTED (NO RESUBMISSIONS REQUIRED) - Same as item 1 above, except that minor corrections as noted shall be made by Contractor.
   3. REVISE AS NOTED AND RESUBMIT - Rejected because of major inconsistencies or errors that shall be resolved or corrected by Contractor prior to subsequent review by Owner.
   4. REJECTED - RESUBMIT - Submitted material does not conform to Drawings and/or Specifications in major respect, i.e.: wrong size, model, capacity, or material.

J. Make a complete and acceptable Submittal at least by second submission. Owner reserves the right to deduct monies from payments due Contractor to cover additional costs of review beyond the second submission per paragraph 1.1T. Illegible Submittals will be rejected and returned to Contractor for resubmission. Contractor shall be in breach of the Contract if Contractor's first resubmittal, following a Submittal which Owner determines falls within categories 3 or 4 above, does not fall within categories 1 or 2 above.

K. Favorable review will not constitute acceptance by Owner of any responsibility for the accuracy, coordination, or completeness of the Submittals. Accuracy, coordination, and completeness of Submittals shall be sole responsibility of Contractor, including responsibility to back-check comments, corrections, and modifications from Owner's review before fabrication. Contractor, Subcontractors, or suppliers may prepare Submittals, but Contractor shall ascertain that Submittals meet requirements of Contract Documents, while conforming to structural space and access conditions at point of installation. Owner's review will be only to assess if the items covered by the Submittals will, after installation or incorporation in the Work, conform to the information given in the Contract Documents and be compatible with the design concept of the completed Project as indicated by the Contract Documents. Favorable review of Submittal, method of Work, or information regarding materials and equipment Contractor proposes to furnish shall not relieve Contractor of responsibility for errors therein and shall not be regarded as assumption of risks or liability by Owner, or any officer or employee thereof, and Contractor shall have no claim under Contract Documents on account of failure or partial failure or inefficiency or insufficiency of any plan or method of Work or material and equipment so accepted. Favorable review shall be considered to mean merely that Owner has no objection to Contractor using, upon Contractor's own full responsibility, plan or method of Work proposed, or furnishing materials and equipment proposed.

L. Unless otherwise specified, Owner's review will not extend to the means, methods, techniques, sequences, or procedures of construction or to safety precautions or programs incident thereto. The review and approval of a separate item as such will not indicate approval of the assembly in which the item functions.

M. Submit complete initial Submittal for those items where required by individual Specification Sections. Complete Submittal shall contain sufficient data to demonstrate that items comply with Specifications, shall meet minimum requirements for submissions cited in Specification Sections, shall include motor data and seismic anchorage certifications, where required, and shall include necessary revisions required for equipment other than first named. If Contractor submits incomplete initial Submittal when complete Submittal is required, Submittal may be returned to Contractor without review.

N. Copy, conform, and distribute reviewed Submittals in sufficient numbers for Contractor's files, Subcontractors, and vendors.

O. After Owner's review of Submittal, revise as noted and resubmit as required. Identify changes made since previous Submittal.
   1. Begin no fabrication or Work that requires Submittals until return of Submittals not requiring resubmittal. Do not extrapolate from Submittals covering similar Work.
   2. Normally, Submittals will be processed and returned to Contractor within 10 Days of receipt.

P. Distribute reviewed Submittals to concerned persons. Instruct recipients to promptly report any inability to comply with provisions.

Q. All Submittals shall be number-identified by Contractor, prior to submission to Owner, in accordance with Owner's numbering format. Owner will provide Contractor with sample numbering format.

R. Submission Requirements:
   1. Deliver Submittals to Owner at least 30 Days before dates reviewed Submittals will be needed.
   2. Initial Submittal of Installation, Operation, and Maintenance Manual shall be:
      a. 45 Days after the date Submittal(s) that pertain to the item are favorably reviewed; and
      b. Prior to start-up and testing of the applicable product or equipment.
   3. The following table lists the number of initial Submittals required from Contractor for each type of submission and to whom Contractor shall distribute the information. Submittals requiring resubmission will require the same quantity and distribution as an initial Submittal.

	Contractor Submittal	
Submittal	# of Hard copies/ Prints/ Samples	Electronic copy
Items Go To →	Owner	Owner
Schedule of Submittals	1	✓
Construction Material Waste Management Plan	1	✓
Safety Program	1	✓
Fire Protection Plan	1	✓
Progress Schedule		
Product Data	1	✓
Drawings or any documents larger than 11" x 17"	2	✓
Samples	4	-
Coordination Drawings	1	✓
Quality Assurance/Control Submittals:		

Submittal	Contractor Submittal	
	# of Hard copies/ Prints/ Samples	Electronic copy
Design Data	1	✓
Test Reports	1	✓
Certificates	1	✓
Manufacturers' Instructions	1	✓
Work Plans	1	✓
Major Products List	1	✓
Other Documents	1	✓

4. Accompany each copy of the Submittal(s) with a Submittal transmittal form, containing:
   a. Date, revision date, and Submittal identification number.
   b. Project name and Owner's Contract number.
   c. Contractor's name, address, and job number.
   d. Specification Section number clearly identified.
   e. The quantity of Shop Drawings, Product Data, or Samples submitted.
   f. Notification of deviations from Contract Documents.
   g. MSDS for each item complying with OSHA's Hazard Communication Standard 29 CFR 1910.1200.
   h. Other pertinent data.
5. Submittal shall include:
   a. Date and revision dates.
   b. Revisions, if any, identified.
   c. Project Name and Contract number.
   d. The names of:
      1) Contractor, Subcontractor, Supplier, Manufacturer, and separate detailer, when pertinent.
   e. Identification of product material by location within the Project.
   f. Relation to adjacent structure or materials.
   g. Field dimensions, clearly identified as such.
   h. Specification Section number and applicable detail reference number and Drawing number.
   i. Applicable reference standards, such as ASTM, ANSI, FS, NEMA, SMACNA or ACI.
   j. A blank space, on the first sheet of each Submittal set, 5" x 4" for the Owner's stamp.
   k. Identification of deviations from Contract Documents.

S. Resubmission requirements:
1. Shop Drawings:
   a. Revise initial Shop Drawings as required and resubmit as specified for initial Submittals.
   b. Indicate on Shop Drawings any changes that have been made other than those requested by Owner.
2. Product Data and Samples:
   a. Submit new Product Data and Samples as required for initial Submittals.
3. Installation, Operation, and Maintenance Manual:
   a. Revise initial Installation, Operation, and Maintenance Manual(s) as required and resubmit as specified for initial Submittals.

T. Charge for resubmissions:
   1. One re-examination of Contractor's Submittals that have been returned for correction or replacement will be included in Owner's budget. Any additional re-examination of Contractor's Submittals will be considered additional scope services to be paid by Contractor through Owner. Contractor shall pay Owner (or Owner may deduct from any progress or final payment), for engineering personnel, on an hourly basis at 2.5 times direct payroll expenses, and for consultant personnel time at 1.25 times the amount billed Owner.

1.2 SCHEDULE OF SUBMITTALS

A. Submit a preliminary Schedule of Submittals as required herein and by Document 00700 (General Conditions). Utilize Owner's Submittal Log form to prepare Schedule of Submittals. Owner's Submittal Log form will be provided to Contractor in electronic media format compatible with Microsoft® Excel 2000.
B. Schedule of Submittals will be used by Owner to schedule its activities relating to review of Submittals. Schedule of Submittals shall indicate a spreading out of Submittals and early Submittals of long-lead-time items and of items that require extensive review.
C. Schedule of Submittals will be reviewed by Owner and shall be revised and resubmitted until accepted by Owner.
D. Unless otherwise specified, transmit Submittals for associated items simultaneously to ensure that information is available for checking each item when it is received. Identify on the Submittal transmittal form that such Submittals should be reviewed together.

1.3 SAFETY PROGRAM

A. Submit Safety Program specific to these Contract Documents as required by Section 01540 (Site Security and Safety).

1.4 PRODUCT DATA

A. Product or Catalog Data:
   1. Manufacturers' standard drawings shall be modified to delete non-applicable data or include applicable data.
   2. Manufacturers' catalog sheets, brochures, diagrams, schedules, charts, illustrations, and other standard descriptive data:
      a. Mark each copy to identify pertinent materials, products, or models.
      b. Show dimensions and clearances required, performance characteristics and capacities, wiring diagrams and controls.
   3. For products specified only by reference standards, give manufacturer, trade name, model or catalog designation, and reference standards.
B. Supplemental Data:
   1. Mark each copy to identify applicable products, models, options, and other data. Supplement manufacturer's standard data to provide information unique to Project.

1.5 QUALITY ASSURANCE/CONTROL SUBMITTALS

A. Design Data:
   1. Indicate that material or product conforms to or exceeds specified requirements.
B. Test Reports:
   1. Indicate that material or product conforms to or exceeds specified requirements.

2. Reports may be from recent or previous tests on material or product, but shall be acceptable to Owner. Comply with requirements of each individual Specification Section.

C. Certificates:
1. Indicate that material or product conforms to or exceeds specified requirements.
2. Submit supporting reference data, affidavits, and certifications as appropriate.
3. Certificates may be recent or from previous test results on material or product, but shall be acceptable to Owner.

D. Manufacturers' Instructions:
1. Include manufacturers' printed instructions for delivery, storage, assembly, installation, startup, adjusting, and finishing.
2. Identify conflicts between manufacturers' instructions and Contract Documents.

E. Work Plans:
1. Submit work plans with sufficient detail to clearly indicate compliance with Specification requirements and to clearly describe by what means and methods Contractor intends to execute the subject Work.

1.6 DELAY OF SUBMITTALS

A. Delay of Submittals by Contractor is considered avoidable delay. Liquidated damages incurred because of late Submittals will be assessed to Contractor.

PART 2 PRODUCTS – NOT USED

PART 3 EXECUTION – NOT USED

END OF SECTION

TRANSMITTAL FORM FOLLOWS THIS PAGE

SUBMITTAL, TRANSMITTAL NO. _____

Project Name: Sonoma Tanks Fence Replacement	Date Received:
Owner: Sonoma County Water Agency Attention: Construction Management Section 404 Aviation Boulevard Santa Rosa, CA 95403-9019	Checked By:
Contractor: Address: Attention:	Log Page: Specification Section Number: 1st Submittal ☐ Resubmittal ☐

By Date

Contractor's signature above shall constitute Contractor's representation that it has satisfied its obligations under the Contract Documents with respect to Contractor's review and approval of Submittals.

Date Transmitted:	Previous Transmittal Date:

No. Copies	Description	Manufacturer	Dwg. or Data No.	Action Taken*

Remarks:

* The action designated above is in accordance with the following legend:

A – No Exceptions Taken
B – Make Corrections Noted (No Resubmission Required)
C – Revise as Noted and Resubmit
D – Rejected - Resubmit
1. Not enough information for review
2. No reproducibles submitted
3. Copies illegible
4. Not enough copies submitted
5. Wrong sequence number
6. Wrong resubmittal number
7. Wrong Specification section number
8. Wrong form used
9. See comments

Comments:

By Date

SECTION 01410

REGULATORY REQUIREMENTS

PART 1 GENERAL

1.1 SUMMARY

A. Section includes: regulatory requirements that may be applicable to Contract Documents.
B. Specific reference in the Specifications to codes and regulations or requirements of regulatory agencies shall mean the latest printed edition of each adopted by the regulatory agency in effect at the time of the opening of Bids, except as may be otherwise specifically stated in the Contract Documents.
C. Should any conditions develop not covered by the Contract Documents wherein the finished Work will not comply with current codes, a Change Order detailing and specifying the required Work shall be submitted to and approved by Owner before proceeding with the Work.

1.2 REFERENCES TO REGULATORY REQUIREMENTS

A. Contractor shall comply with all codes, laws, ordinances, rules and regulations applicable to the Work, which shall have full force and effect as though printed in full in these Specifications. Code, laws, ordinances, rules and regulations are not furnished to Contractor, because Contractor is assumed to be familiar with these requirements.
   1. Work shall be accomplished in conformance with all applicable laws, ordinances, rules and regulations of federal, state, and local governmental agencies and jurisdictions having authority over the Project.
   2. Work shall be accomplished in conformance with all rules and regulations of public utilities and utility districts.
   3. Where such laws, ordinances rules, and regulations require more care or greater time to accomplish Work, or require better quality, higher standards or greater size of products, Work shall be accomplished in conformance to such requirements with no change to the Contract Time and Contract Sum, except where changes in laws, ordinances, rules, and regulations occur subsequent to the time of opening of the Bids.
B. Change Orders and Claims. The California Public Contract Code (including but not limited to Section 7105 (d)(2)) and the California Government Code (Section 930.2, et seq.) apply to all contract procedures for changes, time extensions, change orders (time and money), and claims. Any change, alteration, Modifications, waiver, or omission to implement these procedures, shall have no legal effect unless approved in advance in a fully executed Change Order approved by the Board.

1.3 PRECEDENCE

A. Where Drawings or Specifications require or describe products or execution of better quality, higher standard or greater size than required by applicable codes, ordinances and standards, Drawings and Specifications shall take precedence so long as such increase is legal.
B. Where no requirements are identified on Drawings or in Specifications, comply with all requirements of applicable codes, ordinances and standards of governing authorities having jurisdiction.
C. Conflicts between referenced regulatory requirements: Comply with the one establishing the more stringent requirement.

D. Conflicts between referenced regulatory requirements and Contract Documents: Comply with the one establishing the more stringent requirement.

1.4 REQUIRED PROVISIONS ON CONTRACT CLAIM RESOLUTION

A. The California Public Contract Code specifies required provisions on resolving contract claims less than $375,000, which are set forth below, and constitute a part of this Contract.
   1. For the purposes of this section, "Claim" means a separate demand by Contractor of $375,000 or less for (1) a time extension, (2) payment or money or damages arising from Work done by or on behalf of Contractor arising under the Contract Documents and payment of which is not otherwise expressly provided for or the Claimant is not otherwise entitled to, or (3) an amount the payment of which is disputed by Owner. In order to qualify as a Claim, the written demand must state that it is a Claim submitted under Article 12 of Document 00700 (General Conditions) and be submitted in compliance with all requirements of Document 00700 (General Conditions), Article 12.
   2. A voucher, invoice, payment application, or other routine or authorized form of request for payment is not a Claim for purposes of this section. If such request is disputed as to liability or amount, then the disputed portion of the submission may be converted to a Claim under this section by submitting a separate claim in compliance with Contract Documents claim submission requirements.
   3. Caution: This section does not apply to tort claims and nothing in this section is intended nor shall be construed to change the time periods for filing tort claims or actions specified by Chapter 1 and Chapter 2 of Part 3 of Division 3.6 of Title 1 of the California Government Code.

B. Procedure:
   1. The Claim must be in writing, submitted in compliance with all requirements of Document 00700 (General Conditions), Article 12, including, but not limited to, the time prescribed by and including the documents necessary to substantiate the Claim, pursuant to Document 00700 (General Conditions). Claims must be filed on or before the day of final payment. Nothing in this section is intended to extend the time limit or supersede notice requirements for the filing of claims as set forth in Document 00700 (General Conditions), Article 12 or elsewhere in the Contract Documents.
   2. For Claims of fifty thousand dollars ($50,000) or less
      a. Owner shall respond in writing within 45 days of receipt of the Claim, or
      b. Owner may request in writing within 30 days of receipt of the Claim, any additional documentation supporting the Claim or relating to any defenses or claims Owner may have against Claimant.
         1) If additional information is thereafter required, it shall be requested and provided in accordance with this section, upon mutual agreement of Owner and Claimant.
         2) Owner's written response to the Claim, as further documented, shall be submitted to Claimant within 15 days after receipt of further documentation or within a period of time no greater than taken by Claimant in producing the additional information, whichever is greater.
   3. For Claims over Fifty Thousand Dollars ($50,000) and less than or equal to $375,000:
      a. Owner shall respond in writing within 60 days of receipt of the Claim, or

b. Owner may request in writing within 30 days of receipt of the Claim, any additional documentation supporting the Claim or relating to any defenses or claims Owner may have against Claimant.
   1) If additional information is thereafter required, it shall be requested and provided in accordance with this section, upon mutual agreement of Owner and Claimant;
   2) Owner's written response to the Claim, as further documented, shall be submitted to Claimant within 30 days after receipt of further documentation or within a period of time no greater than taken by Claimant in producing the additional information, whichever is greater.

4. Meet and Confer:
   a. If Claimant disputes Owner's written response, or Owner fails to respond within the time prescribed above, Claimant shall notify Owner, in writing, either within 15 days of receipt of Owner's response or within 15 days of Owner's failure to timely respond, and demand an informal conference to meet and confer for settlement of the issues in dispute. Upon demand Owner will schedule a meet and confer conference within 30 days for settlement of the dispute.
   b. Following the meet and confer conference, if the Claim or any portion remains in dispute, Claimant may file a claim as provided in Chapter 1 (commencing with Section 900) and Chapter 2 (commencing with Section 910) of Part 3 of Division 3.6 of Title 1 of the California Government Code. For purposes of those provisions, the running of the period of time within which a claim must be filed shall be tolled from the time Claimant submits its written claim under paragraph 1.4B hereunder, until the time that Claim is denied as a result of the meet and confer process, including any period of time utilized by the meet and confer process.

1.5 COMPLIANCE WITH AMERICANS WITH DISABILITIES ACT

A. Contractor acknowledges that, pursuant to the Americans with Disabilities Act (ADA), programs, services, and other activities provided by a public entity to the public, whether directly or through a contractor, must be accessible to the disabled public. Contractor shall provide the services specified in the Contract Documents in a manner that complies with the ADA and any and all other applicable federal, state, and local disability rights legislation. Contractor agrees not to discriminate against disabled persons in the provision of services, benefits, or activities provided under this Agreement and further agrees that any violation of this prohibition on the part of Contractor, its employees, agents, or assigns shall constitute a material breach of the Contract Documents.

1.6 SUBSTITUTION OF SECURITIES IN LIEU OF RETENTION

A. In accordance with the provisions of Public Contract Code Section 22300, substitution of securities for any moneys withheld under Contract Documents to ensure performance is permitted under following conditions:
   1. At request and expense of Contractor, securities listed in Section 16430 of the Government Code, bank or savings and loan certificates of deposit, interest bearing demand deposit accounts, standby letters of credit, or any other security mutually agreed to by Contractor and Owner which are equivalent to the amount withheld under retention provisions of Contract shall be deposited with Controller or with a state or federally chartered bank in California, as the escrow agent, who shall then pay such moneys to Contractor. Upon satisfactory completion of Contract, securities shall be returned to Contractor.

2. Alternatively, Contractor may request and Owner shall make payment of retentions earned directly to the escrow agent at the expense of Contractor. At the expense of Contractor, Contractor may direct the investment of the payments into securities and receive the interest earned on the investments upon the same terms provided for in this Section 01410 for securities deposited by Contractor. Upon satisfactory completion of Contract Documents, Contractor shall receive from escrow agent all securities, interest, and payments received by the escrow agent from Owner, pursuant to the terms of this Section 01410. Pay to each Subcontractor, not later than 20 Days after receipt of the payment, the respective amount of interest earned, net of costs attributed to retention withheld from each Subcontractor, on the amount of retention withheld to insure the performance of Contractor.
3. Contractor shall be beneficial owner of securities substituted for moneys withheld and shall receive any interest thereon.
4. Enter into escrow agreement with Controller according to Document 00680 (Escrow Agreement for Security Deposits in Lieu of Retention), as authorized under Public Contract Code Section 22300, specifying amount of securities to be deposited, terms and conditions of conversion to cash in case of default of Contractor, and termination of escrow upon completion of Contract Documents.
5. Public Contract Code Section 22300 is hereby incorporated in full by this reference.

PART 2 PRODUCTS – NOT USED

PART 3 EXECUTION – NOT USED

END OF SECTION

SECTION 01420

REFERENCES AND DEFINITIONS

PART 1 GENERAL

1.1 SUMMARY

A. Section Includes: Reference standards, abbreviations, symbols, definitions, and terminology used in Contract Documents.
B. Full titles are given in this Section for standards cited in other Sections of Specifications.
C. Material and workmanship specified by reference to number, symbol, or title of specific standard such as state standard, commercial standard, federal specifications, technical society, or trade association standard, or other similar standard, shall comply with requirements of standards except when more rigid requirements are specified or required by applicable codes.
D. Standards referred to, except as modified herein, shall have full force and effect as though printed in the Contract Documents. Standards are not furnished to Contractor because manufacturers and trades involved are assumed to be familiar with their requirements.

1.2 REFERENCE TO STANDARDS AND SPECIFICATIONS OF TECHNICAL SOCIETIES; REPORTING AND RESOLVING DISCREPANCIES

A. Reference to standards, specifications, manuals, or codes of any technical society, organization, or association, or to the laws or regulations of any governmental authority, whether such reference be specific or by implication, shall mean the latest standard, specification, manual, code, or laws or regulations (including all amendments, changes, errata, addenda, and supplements) in effect at the time of opening of Bids, except as may be otherwise specifically stated in the Contract Documents.
   1. When an edition or effective date of a reference is not given, it shall be understood to be the current edition or latest revision published as of the date of opening Bids.
      a. Exception: Comply with issues in effect as listed in governing legal requirements.
B. If during the performance of the Work, Contractor discovers any conflict, error, ambiguity, or discrepancy within the Contract Documents or between the Contract Documents and any provision of any such law or regulation applicable to the performance of the Work or of any such standard, specification, manual, or code, or of any instruction of any supplier, report it in writing at once by submitting a RFI to Owner, and do not proceed with the Work affected thereby until consent to do so is given by Owner.
C. Except as otherwise specifically stated in the Contract Documents or as may be provided by Change Order, CCD, or Supplemental Instruction, the provisions of the Contract Documents shall take precedence in resolving any conflict, error, ambiguity, or discrepancy between the provisions of the Contract Documents and:
   1. The provisions of any such standard, specification, manual, code, or instruction (whether or not specifically incorporated by reference in the Contract Documents); or
   2. The provisions of any such laws or regulations applicable to the performance of the Work (unless such an interpretation of the provisions of the Contract Documents would result in violation of such law or regulation).
D. No provision of any such standard, specification, manual, code, or instruction shall be effective to change the duties and responsibilities of Owner, Contractor, or Engineer, or any of their subcontractors, consultants, agents, or employees, from those set forth in the

Contract Documents, nor shall it be effective to assign to Owner, Engineer, or any of their consultants, agents, representatives or employees any duty or authority to supervise or direct the furnishing or performance of the Work or any duty or authority to undertake responsibility inconsistent with the provisions of the Contract Documents.

E. Comply with the applicable portions of standards and specifications published by the technical societies, institutions, associations, and governmental agencies referred to in Specifications.

F. Referenced Grades, Classes, and Types: Where an alternative or optional grade, class, or type of product or execution is included in a reference but is not identified in Drawings or in Specifications, provide the highest, best, and greatest of the alternatives or options for the intended use and prevailing conditions.

G. Jobsite Copies:
   1. Obtain and maintain at the Site copies of reference standards identified on Drawings and in Specifications in order to properly execute the Work.
   2. At a minimum, the following shall be readily available at the Site:
      a. Safety Codes: State of California, Division of Industrial Safety regulations.

H. ASTM and ANSI References: Specifications and Standards of the American Society for Testing and Materials International (ASTM International) and the American National Standards Institute (ANSI) are identified in the Drawings and Specifications by abbreviation and number only and may not be further identified by title, date, revision, or amendment. It is presumed that Contractor is familiar with and has access to these nationally- and industry-recognized specifications and standards.

1.3 DEFINITIONS

A. Wherever any of the words or phrases defined below, or a pronoun used in place thereof, is used in any part of the Contract Documents, it shall have the meaning here set forth. In the Contract Documents, the neuter gender includes the feminine and masculine, and the singular number includes the plural.

B. The following definitions shall apply regardless of capitalization unless the context otherwise requires:
   1. Wherever words “as directed,” “as required,” “as permitted,” or words of like effect are used, it shall be understood that direction, requirements, or permission of Owner is intended. Words “sufficient,” “necessary,” “proper,” and the like shall mean sufficient, necessary, or proper in judgment of Owner. Words “approved,” “acceptable,” “satisfactory,” “favorably reviewed,” or words of like import, shall mean approved by, or acceptable to, or satisfactory to, or favorably reviewed by Owner.
   2. Wherever the word “may” or “ought” is used, the action to which it refers is discretionary. Wherever the word “shall” or “will” is used, the action to which it refers is mandatory.
   3. Addenda: Written or graphic instruments issued prior to the opening of Bids, which clarify, correct, or change the bidding requirements or the Contract Documents. Addenda shall not include the minutes of the Pre-Bid Conference and/or Site Visit.
   4. Agreement (Document 00520): Agreement is the basic Contract Document that binds the parties to construction Work. Agreement defines relationships and obligations between Owner and Contractor and by reference incorporates Conditions of Contract, Drawings, and Specifications and contains Addenda and all Modifications subsequent to execution of Contract Documents.

5. Alternate: Work added to or deducted from the base Bid, if accepted by Owner.
6. Application for Payment: Written application for monthly or periodic progress or final payment made by Contractor complying with the Contract Documents.
7. Approved Equal: Approved in writing by Owner as being of equivalent quality, utility and appearance.
8. Asbestos: Any material that contains more than one percent asbestos and is friable or is releasing asbestos fibers into the air above current action levels established by OSHA or Cal/OSHA.
9. Bid: The offer or proposal of the Bidder submitted on the prescribed form(s) setting forth the prices for the Work to be performed.
10. Bidder: One who submits a Bid.
11. Bidding Documents: All documents comprising the Project Manual (including all documents and Specification Sections listed in Document 00010 [Table of Contents]), including documents supplied for bidding purposes only and Contract Documents.
12. Board: The Board of Directors of the Owner.
13. Business Day: Any Day other than Saturday, Sunday, and the following days that have been designated as holidays by Owner. If a holiday falls on a Saturday, the preceding Friday will be the holiday. If a holiday falls on a Sunday, the following Monday will be the holiday.
    a. New Year's Day, January 1;
    b. Martin Luther King Jr.'s Birthday, third Monday in January;
    c. Lincoln's Birthday, February 12;
    d. Presidents' Day, third Monday in February;
    e. Memorial Day, last Monday in May;
    f. Independence Day, July 4;
    g. Labor Day, first Monday in September;
    h. Veterans' Day, November 11;
    i. Thanksgiving Day, as designated by the President;
    j. The Day following Thanksgiving Day;
    k. Christmas Day, December 25; and
    l. Each day appointed by the Governor of California and formally recognized by the Sonoma County Board of Supervisors as a day of mourning, thanksgiving, or special observance.
14. By Owner: Work that will be performed by Owner or its agents at the Owner's expense.
15. By Others: Work that is outside scope of Work to be performed by Contractor under this Contract, which will be performed by Owner, other contractors, or other means.
16. Change Order: A written instrument prepared by Owner and signed by Owner and Contractor, stating their agreement upon all of the following:
    a. a change in the Work;
    b. the amount of the adjustment in the Contract Sum, if any; and
    c. the amount of the adjustment in the Contract Time, if any.

17. Code Inspector: A local or state agency responsible for the enforcement of applicable codes and regulations.
18. Concealed: Work not exposed to view in the finished Work, including within or behind various construction elements.
19. Construction Change Directive ("CCD"): A written order prepared and signed by Owner, directing a change in the Work and stating a proposed basis for adjustment, if any, in the Contract Sum or Contract Time, or both.
20. Contract Conditions or Conditions of the Contract: Consists of two parts: General Conditions and Supplementary Conditions.
    a. General Conditions are general clauses that are common to the Owner Contracts, including Document 00700 (General Conditions).
    b. Supplementary Conditions modify or supplement General Conditions to meet specific requirements for these Contract Documents, including Document 00800 (Supplementary Conditions).
21. Contract Documents and Contract: Contract Documents and Contract shall consist of the documents identified as the Contract Documents in Document 00520 (Agreement), plus all changes, Addenda, and Modifications thereto.
22. Contract Modification: Either:
    a. a written amendment to Contract signed by Contractor and Owner; or
    b. a Change Order; or
    c. a Construction Change Directive; or
    d. a written directive for a minor change in the Work issued by Owner.
23. Contract Sum: The sum stated in the Agreement and, including authorized adjustments, the total amount payable by Owner to Contractor for performance of the Work and the Contract Documents. The Contract Sum is also sometimes referred to as the Contract Price or the Contract Amount.
24. Contract Time: The number or numbers of Days or the dates stated in the Agreement:
    a. to achieve Substantial Completion of the Work or designated Milestones; and/or
    b. to complete the Work so that it is ready for final payment and is accepted.
25. Contractor: The person or entity identified as such in the Agreement and referred to throughout the Contract Documents as if singular in number and neutral in gender. The term "Contractor" means the Contractor or its authorized representative.
26. Contractor's Employees: Persons engaged in execution of Work under Contract as direct employees of Contractor, as Subcontractors, or as employees of Subcontractors.
27. Day: One calendar day of 24 hours measured from midnight to the next midnight, unless the word "day" is specifically modified to the contrary.
28. Defective: An adjective which, when modifying the word "Work," refers to Work that is unsatisfactory or unsuited for the use intended, faulty, or deficient, that does not conform to the Contract Documents, or does not meet the requirements of any inspection, reference standard, test or approval referred to in the Contract Documents (including but not limited to approval of Samples and "or equal" items), or has been damaged prior to final payment (unless responsibility for the protection thereof has been assumed by Owner). Owner is the judge of whether Work is Defective.

29. Drawings: The graphic and pictorial portions of Contract Documents, wherever located and whenever issued, showing the design, location and dimensions of the Work, generally including plans, elevations, sections, details, schedules, and diagrams.
30. Engineer: If used elsewhere in the Contract Documents, "Engineer" shall mean a person holding a valid California State Architect's or Engineer's license representing the Owner in the administration of the Contract Documents. Engineer may be an employee of or an independent consultant to Owner. When Engineer is referred to within the Contract Documents and no Engineer has in fact been designated, then the matter shall be referred to Owner. The term Engineer shall be construed to include employees of Engineer and/or employees that Engineer supervises. When the designated Engineer is an employee of Owner, his or her authorized representatives on the Project will be included under the term Engineer. If Engineer is an employee of Owner, Engineer is the beneficiary of all Contractor obligations to Owner, including without limitation, all releases and indemnities.
31. Equal: Equal in opinion of Owner. Burden of proof of equality is responsibility of Contractor.
32. Exposed: Work exposed to view in the finished Work, including behind louvers, grilles, registers and various other construction elements.
33. Final Acceptance or Final Completion: Owner's acceptance of the Work as satisfactorily completed in accordance with Contract Documents. Requirements for Final Acceptance/Final Completion include, but are not limited to:
    a. All systems having been tested and accepted as having met requirements of Contract Documents.
    b. All required instructions and training sessions having been given by Contractor.
    c. All Project Record Documents having been submitted by Contractor, reviewed by Owner, and accepted by Owner.
    d. All punch list Work, as directed by Owner, having been completed by Contractor.
    e. Generally all Work, except Contractor maintenance after Final Acceptance/Final Completion, having been completed to satisfaction of Owner.
34. Force Account: Work directed to be performed without prior agreement as to lump sum or unit price cost thereof, and which is to be billed at cost for labor, materials, equipment, taxes, and other costs, plus a specified percentage for overhead and profit.
35. Furnish: Supply only, do not install.
36. Indicated: Shown or noted on the Drawings.
37. Install: Install or apply only, do not furnish.
38. Latent: Not apparent by reasonable inspection, including but not limited to, the inspections and research required as a condition to bidding under Document 00700 (General Conditions).
39. Law: Unless otherwise limited, all applicable laws including without limitation all federal, state, and local laws, statutes, standards, rules, regulations, ordinances, and judicial and administrative decisions.
40. Material: This word shall be construed to embrace machinery, manufactured articles, materials of construction (fabricated or otherwise), and any other classes of material to be furnished in connection with Contract, except where a more limited meaning is indicated by context.

41. Milestone: A principal event specified in Contract Documents relating to an intermediate completion date or time prior to Substantial Completion of all Work.
42. Modification: Same as Contract Modification.
43. Not in Contract: Work that is outside the scope of Work to be performed by Contractor under Contract Documents.
44. Notice of Completion: Shall have the meaning provided in California Civil Code Section 9204, and any successor statute.
45. Off Site: Outside geographical location of the Project.
46. Owner: The Water Agency.
47. Owner-Furnished, Contractor-Installed: Items furnished by Owner at its cost for installation by Contractor at its cost under Contract Documents.
48. Owner's Representative(s): See Document 00520 (Agreement).
49. Partial Utilization: Use by Owner of a substantially completed part of the Work for the purpose for which it is intended (or a related purpose) prior to Substantial Completion of all of the Work.
50. PCBs: Polyclorinated byphenyls.
51. Phase: A specified portion of the Work (if any) specifically identified as a Phase in Document 00520 (Agreement) or Document 01100 (Summary).
52. Product Data: That information (brochures, catalog sheets, manufacturer's cut sheets, etc.) supplied by vendors having technical and commercial characteristics of the supplied equipment or materials and accompanying commercial terms such as warranties, instructions, and manuals.
53. Progress Report: A periodic report submitted by Contractor to Owner with progress payment invoices accompanying progress schedule. See Document 00700 (General Conditions).
54. Project: Total construction of which Work performed under Contract Documents may be whole or part.
55. Project Float: As defined in Document 00700 (General Conditions).
56. Project Manual: Project Manual consists of Bidding Requirements, Agreement, Bonds, Certificates, Contract Conditions, Drawings, and Specifications.
57. Project Record Documents: All Project deliverables required under Sections 01700 et seq., including without limitation, as-built drawings; Project Record Specifications; Installation, Operation, and Maintenance Manuals; and Machine Inventory Sheets.
58. Provide: Furnish and install.
59. Request for Information ("RFI"): A document prepared by Contractor requesting information regarding the Project or Contract Documents as provided in Section 01250 (Modification Procedures). The RFI system is also a means for Owner to submit Contract Document clarifications or supplements to Contractor.
60. Request for Proposals ("RFP"): A document issued by Owner to Contractor whereby Owner may initiate changes in the Work or Contract Time as provided in Contract Documents. See Section 01250 (Modification Procedures).
61. RFI-Reply: A document consisting of supplementary details, instructions, or information issued by Owner that clarifies or supplements Contract Documents, and with which Contractor shall comply. RFI-Replies do not constitute changes in Contract Sum or

Contract Time except as otherwise agreed in writing by Owner. RFI-Replies will be issued through the RFI administrative system.

62. Samples: Physical examples of materials, equipment, or workmanship that are representative of some portion of the Work and which establish the standards by which such portion of the Work will be judged.
63. Sanitation Standards: The Sonoma County Water Agency Design and Construction Standards for Sanitation Facilities.
64. Shop Drawings: All drawings, diagrams, illustrations, schedules, and other data or information which are specifically prepared or assembled by or for Contractor and submitted by Contractor to illustrate some portion of the Work.
65. Shown: As indicated on Drawings.
66. Site: The particular geographical location of Work performed pursuant to Contract Documents.
67. Specifications: The written portion of the Contract Documents consisting of requirements for materials, equipment, construction systems, standards, and workmanship for the Work; performance of related services; and are contained in Divisions 1 through 16.
68. Specified: As written in Specifications.
69. Subcontractor: A person or entity that has a direct contract with Contractor to perform a portion of the Work at the Site. The term "Subcontractor" is referred to throughout the Contract Documents as if singular in number and neutral in gender and means a Subcontractor or an authorized representative of the Subcontractor. The term "Subcontractor" does not include a separate contractor or subcontractors of a separate contractor.
70. Substantial Completion: The Work (or a specified part thereof) has progressed to the point where, in the opinion of Owner as evidenced by a Certificate of Substantial Completion, the Work is sufficiently complete, in accordance with Contract Documents, so that the Work (or specified part) can be utilized for the purposes for which it is intended; or if no such certificate is issued, when the Work (or specified part) is complete and ready for final payment as evidenced by written recommendation of Owner for final payment. The terms "Substantially Complete" and "Substantially Completed" as applied to all or part of the Work refer to Substantial Completion thereof.
71. Superintendence: Executive oversight and charge of the main aspects of construction, including scheduling, sequence of subcontractor Work, and quality control.
72. Supplemental Instruction: A written directive from Owner to Contractor ordering alterations or Modifications that do not result in change in Contract Sum or Contract Time, and do not substantially change Drawings or Specifications. See Section 01250 (Modification Procedures).
73. Testing and special inspection agency: An independent entity engaged by Owner to inspect and/or test the workmanship, materials, or manner of construction of buildings or portions of buildings, to determine if such construction complies with the Contract Documents and applicable codes.
74. Underground Facilities: All pipelines, conduits, ducts, cables, wires, manholes, vaults, tanks, tunnels or other such facilities or attachments, and any encasements containing such facilities that have been installed underground to furnish any of the following

services or materials: Electricity, gases, chemicals, steam, liquid petroleum products, telephone or other communications, cable television, sewage and drainage removal, traffic or other control systems, or water.

75. Unit Price Work: Shall be the portions of the Work for which a unit price is provided in Document 00520 (Agreement) or Section 01100 (Summary).
76. Water Agency: The Sonoma County Water Agency (Water Agency), a public agency of the State of California, acting under and by virtue of the authority vested in the Owner by the laws of the State of California.
77. Work: The entire completed construction, or the various separately identifiable parts thereof, required to be furnished under the Contract Documents within the Contract Time. Work includes and is the result of performing or furnishing labor and furnishing and incorporating materials and equipment into the construction, and performing or furnishing services and furnishing documents, all as required by the Contract Documents including everything shown in the Drawings and set forth in the Specifications. Wherever the word "work" is used, rather than the word "Work," it shall be understood to have its ordinary and customary meaning.

PART 2 PRODUCTS – NOT USED

PART 3 EXECUTION – NOT USED

END OF SECTION

SECTION 01450

QUALITY CONTROL

PART 1 GENERAL

1.1 SECTION INCLUDES

A. Contractor's Quality Control
B. Quality of the Work
C. Inspections and Tests by Governing Authorities
D. Inspections and Tests by Serving Utilities
E. Inspections and Tests by Manufacturer's Representatives
F. Tests and Inspections by Owner or Owner's Independent Testing and Inspection Agency
G. Additional Testing and Inspection

1.2 CONTRACTOR'S QUALITY CONTROL

A. Contractor's Quality Control: Ensure that products, services, workmanship, and Site conditions comply with requirements of Drawings and Specifications by coordinating, supervising, testing, and inspecting the Work and by utilizing only suitably qualified and appropriately audited, licensed, or trained personnel.
B. Quality Requirements: Work shall be accomplished in accordance with quality requirements of Drawings and Specifications, including, by reference, all codes, laws, rules, regulations, and standards. When no quality basis is prescribed, the quality and testing procedures shall be in accordance with the best-accepted practices of the construction industry for the locale of the Project, for projects of this type, or standards set by engineering or technical societies (e.g., ASTM or ASHRAE), whichever is more stringent.
C. Quality Control Personnel: Employ and assign knowledgeable and skilled personnel as necessary to perform quality control functions to ensure that the Work is provided as required.
D. At Contractor's expense, Contractor may employ a certified independent testing agency to perform compaction tests where there is disagreement. Owner may consider such tests, but will have the authority to make the final determination of relative compaction.
E. At Contractor's expense, Contractor may employ a certified independent welding inspection agency to perform welding inspections. Owner may consider such tests, but will have the authority to make the final determination of welding quality.

1.3 QUALITY OF THE WORK

A. Quality of Products: Unless otherwise indicated or specified, all products shall be new, free of defects, and fit for the intended use.
B. Quality of Installation: All Work shall be produced plumb, level, square and true, or true to indicated angle, and with proper alignment and relationship between the various elements, as indicated or required by Contract Documents.
C. Protection of Completed Work: Take all measures necessary to preserve completed Work free from damage, deterioration, soiling, and staining, until acceptance by Owner.
D. Standards and Code Compliance and Manufacturer's Instructions and Recommendations: Unless more stringent requirements are indicated or specified, comply with manufacturer's instructions and recommendations, reference standards and building code research report requirements in preparing, fabricating, erecting, installing, applying, connecting, and finishing Work.

E. Deviations from Standards and Code Compliance and Manufacturer's Instructions and Recommendations: Secure Owner's advance written consent. Document and explain all deviations from reference standards and building code research report requirements and manufacturer's product installation instructions and recommendations, including acknowledgement by the manufacturer that such deviations are acceptable and appropriate for the Project.

F. Verification of Quality: Work shall be subject to verification of quality by Owner in accordance with provisions of the Contract Documents.
   1. Cooperate by making Work available for inspection.
   2. Such verification may include mill, plant, shop, or field inspection as required.
   3. Provide access to all parts of the Work, including plants where materials or equipment are manufactured or fabricated.
   4. Provide all information and assistance as required, including that by and from subcontractors, fabricators, materials suppliers and manufacturers, for verification of quality by Owner.
   5. Applicable provisions of the Contract Documents shall govern Contract Modifications, if any, resulting from such verification activities.

G. Observations by Owner's Consultants: Periodic and occasional observations of Work in progress will be made by Owner and Owner's consultants as deemed necessary to review progress of Work and general conformance with design intent.

H. Limitations on Inspection, Test, and Observation: Neither employment of independent testing and inspection agency nor observations or tests by Owner and Owner's consultants shall in any manner relieve Contractor of obligation to perform Work in full conformance to all requirements of Contract Documents.

I. Owner's Acceptance and Rejection of Work: Owner reserves the right to reject all Work not in conformance with the requirements of the Drawings and Specifications, or otherwise Defective.

J. Correction of Defective Work: Defective Work shall be modified, replaced, repaired or redone by the Contractor at no change in Contract Sum or Contract Time.

K. Acceptance of Defective Work: Acceptance of Defective Work, without specific written acknowledgement and approval of Owner, shall not relieve the Contractor of the obligation to correct such Work.

L. Contract Adjustment for Defective Work: Should Owner determine that it is not feasible or in Owner's interest to require Defective Work to be repaired or replaced, an equitable reduction in Contract Sum shall be made by agreement between Owner and Contractor. If equitable amount cannot be agreed upon, a Construction Change Directive will be issued and the amount in dispute resolved in accordance with applicable provisions of Document 00700 (General Conditions).

M. Non-Responsibility for Defective Work: Owner and Owner's consultants disclaim any and all responsibility for Work produced not in conformance with the Drawings and Specifications.

N. Responsibility for Defective Work: Contractor shall have full responsibility for all consequences resulting from Defective Work, including without limitation all delays, disruptions, extra inspection and correction costs by Contractor and Owner and re-Work, and extra time and costs of all types. Contractor waives excuses for Defective Work relating to Owner's prior review of Submittals and/or prior failure to notice Defective Work in place on inspection.

1.4 INSPECTIONS AND TESTS BY GOVERNING AUTHORITIES

A. Regulatory Requirements for Testing and Inspection: Comply with UBC requirements and all other requirements of governing authorities having jurisdiction.
B. Inspections and Tests by Governing Authorities: Cause all tests and inspections required by governing authorities having jurisdiction to be made for Work under this Contract.
   1. Such authorities may include, but are not limited to Fire Department- and similar agencies.
   2. Except as specifically noted, scheduling, conducting and paying for such inspections shall be solely the Contractor's responsibility.

1.5 INSPECTIONS AND TESTS BY SERVING UTILITIES

A. Inspections and Tests by Serving Utilities: Cause all tests and inspections required by serving utilities to be made for Work under this Contract. Scheduling, conducting, and paying for such inspections shall be solely the Contractor's responsibility.

1.6 INSPECTIONS AND TESTS BY MANUFACTURER'S REPRESENTATIVES

A. Inspections and Tests by Manufacturer's Representatives: Cause all tests and inspections specified to be conducted by materials or systems manufacturers to be made. Additionally, all tests and inspections required by materials or systems manufacturers as conditions of warranty or certification of Work shall be made, the cost of which shall be included in the Contract Sum.

1.7 TESTS AND INSPECTIONS BY OWNER OR OWNER'S INDEPENDENT TESTING AND INSPECTION AGENCY

A. Owner may conduct or Owner may select an independent testing and inspection agency or agencies to conduct tests and inspections as indicated on Drawings, in Specifications, and as required by governing authorities having jurisdiction.
B. Responsibility for payment for such tests and inspections shall be as indicated in paragraph 1.7D below. All time and costs for Contractor's service related to such tests and inspections shall be included in Contract Time and Contract Sum.
C. Contractor shall pay for all additional charges by testing and inspection agencies and governing authorities having jurisdiction due to the following:
   1. Contractor's failure to properly schedule or notify testing and inspection agency or authorities having jurisdiction.
   2. Changes in sources, lots, or suppliers of products after original tests or inspections.
   3. Changes in means, methods, techniques, sequences, and procedures of construction that necessitate additional testing, inspection, and related services.
   4. Changes in mix designs for concrete and mortar after review and acceptance of submitted mix design.
   5. Contractor-submitted requests to change materials or products, which are accepted, but require testing and/or reinspection beyond original design.
D. In addition to tests to be performed by Contractor (and to be paid by Contractor) as required elsewhere in Contract Documents, tests and special inspections that may be performed by Owner or Owner's independent testing and inspection agency or agencies and paid by Owner include, but are not limited to, the following:

SECTION	TESTS
03300	Concrete slump
03300	Concrete compressive strength

E. Owner may perform tests at any time at its discretion.

F. California Test Method No. 216 (Relative Compaction of Untreated and Treated Soils and Aggregates) and 231 (Relative Compaction of Untreated/Treated Soils and Aggregates [Area Concept Utilizing Nuclear Gauges]) may be modified as follows:

1. In lieu of the specified 10-pound hammer, a Test Lab Model No. F-590 Mechanical Compactor (or equal) with a 10-pound hammer will be used.
2. In lieu of the specified split cylindrical mold, a non-split cylindrical mold of the same diameter and wall thickness will be used.
3. Any of the provisions of Test Method No. 216 which conflict with the use of such equipment described in (1) and (2) are considered void to the extent they preclude the use of such equipment.
4. In lieu of the specified test form, an Owner standard form will be used.
5. Correction for oversize material may be obtained from a table based upon the given equations and the coefficient for +3/4-inch aggregate will be computed from the following formulae:

   $Y = 1.0$ for $P = 10$ to 20
   $Y = 1.0 - .002 (P - 20)$ for $P = 20$ to 50

   where:

   Y = coefficient for 3/4″ aggregate
   P = percent retained on 3/4″ screen

6. In lieu of the sand cone method of determination of in-place density, the method described in Part 1 of California Test Method 231 will be used except that the mode of operation and the probe depth will be determined by Owner.
7. In-place density and relative compaction will be determined on the basis of individual test sites in lieu of the area concept.

G. Test and Inspection Reports: After each inspection and test by an independent testing and inspection agency or agencies, one copy of report shall be promptly submitted to Owner, who will distribute copies to Contractor and any agency having jurisdiction (if required by Code).

1. Reports shall clearly identify the following:
   a. Date issued.
   b. Project name and number.
   c. Identification of product and Specifications Section in which Work is specified.
   d. Name of inspector.
   e. Date and time of sampling or inspection.
   f. Location in Project where sampling or inspection was conducted.
   g. Type of inspection or test.
   h. Date of test.
   i. Results of tests.
   j. Comments concerning conformance with Contract Documents and other requirements.

2. Test reports shall indicate specified or required values and shall include statement whether test results indicate satisfactory performance of products.
3. Samples taken but not tested shall be reported.
4. Test reports shall confirm that methods used for sampling and testing conform to specified test procedures.
5. When requested, testing and inspection agency shall provide interpretations of test results.

H. Contractor Responsibilities for Inspections and Tests:
1. Unless specified otherwise, notify Owner and testing agency 72 hours in advance of expected time of each test and inspection, and for all other operations requiring inspection and testing services, by submitting Contractor's inspection request in writing (or, if Owner provides a specific form, on that form).
   a. When tests or inspections cannot be performed after such notice, due to Contractor's negligence, reimburse Owner for testing and inspection agency personnel and travel expenses incurred.
2. Deliver to laboratory or designated location, adequate samples of materials proposed to be used that require advance testing, together with proposed mix designs.
3. Cooperate with testing and inspection agency personnel, Owner, and Owner's consultants. Provide access to Work areas and off-Site fabrication and assembly locations, including during weekends and after normal Work hours.
4. Provide incidental labor and facilities to provide safe access to Work to be tested and inspected, to obtain and handle Samples at the Site or at source of products to be tested, and to store and cure test Samples.
5. Provide, at least 15 Days in advance of first test or inspection of each type, a schedule of tests or inspections indicating types of tests or inspections and their scheduled dates.

1.8 ADDITIONAL TESTING AND INSPECTION

A. If initial tests or inspections made by Owner or the testing and inspection agency reveal that materials do not comply with Contract Documents, or if Owner has reasonable doubt that materials do not comply with Contract Documents, additional tests and inspections shall be made as directed.
1. If additional tests and inspections establish that materials comply with Contract Documents, Owner shall pay all costs for such tests and inspections.
2. If additional tests and inspections establish that materials do not comply with Contract Documents, all costs of such tests and inspections shall be deducted from Contract Sum.
3. If Work requiring inspection is covered by follow-on or follow-up Work before it is inspected, uncover Work so proper inspections can be performed. All costs of such tests and inspections shall be deducted from Contract Sum.

PART 2 PRODUCTS – NOT USED

PART 3 EXECUTION – NOT USED

END OF SECTION

SECTION 01500

TEMPORARY FACILITIES AND CONTROLS

PART 1 GENERAL

1.1 SUMMARY

A. Section Includes:
   1. Temporary Electricity
   2. Temporary Telephone
   3. Temporary Water
   4. Temporary Sanitary Facilities
   5. Temporary Barriers and Enclosures
   6. Tree and Plant Protection
   7. Water Control
   8. Noise Control
   9. Removal of Temporary Facilities and Controls

1.2 DEFINITIONS

A. Dripline: The area on the ground from the trunk of any tree to the point directly below the outermost tips of the foliage of that tree.
B. Tree Protection Zone (TPZ): A space above and below ground within which trees are to be retained and protected. May extend beyond the Dripline when practical.
C. Tree damage: Tree damage shall include, but not be limited to, the following: significant injury to the root system or other parts of a tree including burning, application of toxic substances, damaging through contact with equipment or machinery, changing the natural grade within the TPZ, compacting the soil within the TPZ, interfering with the normal water requirements of the tree, unauthorized trenching or excavating within the TPZ, or unauthorized removal of more than 1/3 of the live wood, foliage, or roots.

1.3 SUBMITTALS

A. Temporary Fence Plan/Detail
B. Two (2) 12-inch temporary fence fabric samples.

1.4 TEMPORARY ELECTRICITY

A. Provide, maintain, and pay for electrical power at the Site for construction purposes.

1.5 TEMPORARY TELEPHONE

A. Provide, maintain, and pay for telephone service to field office at time of Project mobilization.

1.6 TEMPORARY WATER

A. Provide, maintain, and pay for suitable quality water service required for construction operations.

1.7 TEMPORARY SANITARY FACILITIES

A. Provide and maintain required temporary buildings with sanitary toilets for use of all workers.

B. Comply with all minimum requirements of the Health Department or other public agency having jurisdiction; maintain in a sanitary condition at all times.

1.8 TEMPORARY BARRIERS AND ENCLOSURES

A. Provide barriers to prevent unauthorized entry to construction areas, to allow for Owner's use of Site, and to protect existing facilities and adjacent properties from damage from construction operations.
B. Provide barricades required by governing authorities to control public access to existing buildings.
C. Protect vehicular traffic, stored materials, Site, and structures from damage.
D. Provide temporary fencing around oak trees at Driplines, or further if practical, to create a TPZ.

1.9 TREE AND PLANT PROTECTION

A. Root protection:
   1. No storage of materials or equipment will be allowed within the TPZ.
   2. Whenever possible, excavation shall be on a radial line, diverging from the tree trunk.
B. Exposure to harmful substances: No storage or dumping of any substances that may be harmful to trees shall occur at any location on the Site.
C. Where construction is to be performed in the vicinity of trees and shrubbery, the Work shall be carried on in a manner that will cause minimum damage. Owner will remove or limb trees as necessary prior to construction. Under no circumstances are additional trees to be removed or limbed without written permission from Owner. Trees and shrubbery that are not to be removed shall be protected from injury or damage resulting from Contractor's operations.
D. All damage shall be immediately reported to Owner, who will file a report so that penalties may be determined.
E. Any tree that is removed without Owner's permission or is irreparably damaged, in the opinion of Owner, shall cost Contractor $27.00 per square inch of cross section, measured at 4 ½ feet above ground, but not less than $250.00, such cost to be deducted from monies due or to become due under the Contract. If tree protection is not performed or is not performed adequately, and Owner determines that a tree has been irreparably damaged, Owner will impose the same penalty as for unauthorized removal of a tree.

1.10 WATER CONTROL

A. Protect Site from puddling or running water.
B. Provide water barriers as required to protect Site from soil erosion.

1.11 NOISE CONTROL

A. When required by OSHA Standards, construction workers shall be provided with ear protection to operate equipment.

1.12 REMOVAL OF TEMPORARY FACILITIES AND CONTROLS

A. Remove temporary utilities, equipment, facilities, and materials prior to final inspection.
B. Clean and repair damage caused by installation or use of temporary Work.
C. Restore existing facilities used during construction to original condition. Restore permanent facilities used during construction to specified condition.

PART 2 PRODUCTS – NOT USED

PART 3 EXECUTION – NOT USED

END OF SECTION

SECTION 01540

SITE SECURITY AND SAFETY

PART 1 GENERAL

1.1 SUBMITTALS

A. Safety Program.
B. Fire Protection Plan.

1.2 PROTECTION

A. Continuously maintain protection as necessary to protect the Work, as a whole and in part, and adjacent property and improvements from accidents, injuries or damage.
B. Properly protect the Work:
   1. With lights, guard rails, temporary covers and barricades.
   2. Enclose excavations with proper barricades.
   3. Brace and secure all parts of the Work against storm and accident.
   4. Provide such additional forms of protection that may be necessary under existing circumstances.
C. Provide and maintain in good condition all protective measures required to adequately protect the public from hazards resulting from the Work and to exclude unauthorized persons from the Work. When regulated by Building Code, Cal OSHA, or other authority, such legal requirements for protection shall be considered as minimum requirements. Be responsible for the protection in excess of such minimum requirements as required.

1.3 CONTROL OF SITE

A. Ensure that no alcohol, firearms, weapons, or controlled substance enters or is used at the Site. Immediately remove from the Site and terminate the employment of any employee found in violation of this provision.

1.4 SAFETY PROGRAM

A. Prior to starting any Work at the Site, submit a Safety Program that has been reviewed and approved by an Industrial Hygienist certified by the American Board of Industrial Hygiene or by a Certified Safety Professional. The Safety Program shall include the name, certification number, and certification seal of the Industrial Hygienist or Certified Safety Professional. Comply with the Safety Program and all applicable federal, state, and local regulation codes, rules, law and ordinances.
B. Receipt and/or review of the Safety Program by Owner, Engineer or Owner's Representative shall not relieve Contractor of any responsibility for complying with all applicable safety regulations.
C. It is essential that Contractor and each Subcontractor implement an effective and vigorous Safety and Health Program to cover their respective portions of the Work. Subject to Contractor's overall responsibility for Project safety, it shall be understood that the full responsibility for providing a safe place to work with respect to their respective portions of the Work rests with each individual Contractor and Subcontractor.
D. Safety Program components:
   1. Injury and Illness Prevention Program (IIPP): Conforming to the General Industrial Safety Orders (CCR Title 8, Division 1, Chapter 4, Subchapter 7, Section 3203), and the California Labor Code (Section 6401.7).

2. Site-Specific Safety and Health Plan (SSHP): Describing health and safety procedures that shall be implemented during the Work in order to ensure safety of the public and those performing the Work. Follow the guidelines for a SSHP listed in CCR Title 8, Division 1, Chapter 4, Subchapter 7, Section 5192, Item (b)(4) f.

E. The wearing of hard hats shall be mandatory at all times for personnel on Site. Supply sufficient hard hats to equip properly all employees and visitors.

F. Whenever an exposure exists, appropriate personal protective equipment (PPE) shall be used by all affected personnel. Supply PPE to all personnel under Contractor's direction.

1.5 SAFETY REQUIREMENTS

A. Standards: Maintain the Project in accordance with state and local safety and insurance standards.

B. Hazards Control:
   1. Store volatile wastes in covered metal containers and remove from premises daily.
   2. Prevent accumulation of wastes that create hazardous conditions.
   3. Provide adequate ventilation during use of volatile or noxious substances.

C. Conduct cleaning and disposal operations to comply with local ordinances and anti-pollution laws.
   1. Do not burn or bury rubbish or waste material on the Site.
   2. Do not dispose of volatile wastes such as mineral spirits, oil, or paint thinner in storm or sanitary drains.
   3. Do not dispose of wastes into streams or waterways.

D. Provide accident information on the forms provided by Contractor. This information shall be provided on the same Day as the occurrence of said incident.

1.6 SITE SAFETY OFFICER

A. Designate one of Contractor's staff as "Site Safety Officer" whose duties shall include the responsibility for enforcing the environmental protection provisions of the Contract Documents including safety and health, the requirements of the Occupational Safety and Health Act, and other applicable federal, state and local standards. Submit for review by Owner Contractor's intended traffic flow plan, security plan, program for temporary structures, housecleaning plan, demolition program, and environmental safety and health plan. After review by Owner, the implementation and enforcement of these plans shall become the responsibility of the Site Safety Officer. Any changes in the plans shall be requested by Contractor through the Site Safety Officer for written concurrence by Owner.

B. Owner's risk management representative(s) shall be allowed access to accident/injury and illness reports, inspection reports, scheduling and construction meetings, and safety meetings.

1.7 FIRE PROTECTION PLAN

A. Prior to starting any Work at the Site, submit a fire protection plan that has been reviewed and approved by the Sonoma Valley Fire and Rescue Authority. It is recommended that the plan include, but not be limited to, a discussion of the following items:
   1. Equipment spark arresters
   2. Fire-extinguishing equipment on hand
   3. Method of operation in case of fire
   4. Notification to authorities of any fire
   5. Access available during performance of Work
   6. Educating workers of fire protection plan

7. Storage protection for flammable materials
8. Ventilation and illumination equipment

PART 2 PRODUCTS - NOT USED

PART 3 EXECUTION - NOT USED

END OF SECTION

SECTION 01770

CONTRACT CLOSEOUT

PART 1 GENERAL

1.1 SUMMARY

A. Section Includes:
   1. Description of Contract closeout procedures including:
      a. Removal of Temporary Construction Facilities
      b. Substantial Completion
      c. Final Completion
      d. Project Guarantee
      e. Warranties
      f. Turn-In
      g. Release of Claims
      h. Fire Inspection Coordination

1.2 REMOVAL OF TEMPORARY CONSTRUCTION FACILITIES

A. Remove temporary materials, equipment, services, and construction prior to Substantial Completion inspection.
B. Clean and repair damage caused by installation or use of temporary facilities.
C. Restore permanent facilities used during construction to specified condition.
D. Comply with paragraph [1.15] of Section 01500 (Temporary Facilities and Controls).

1.3 SUBSTANTIAL COMPLETION

A. When Contractor considers Work or designated portion of the Work as Substantially Complete, submit timely written notice to Owner, with list of items remaining to be completed or corrected.
B. Within reasonable time, Owner will inspect to determine status of completion.
C. Should Owner determine that Work is not Substantially Complete, Owner will promptly notify Contractor in writing, listing all defects and omissions.
D. Remedy deficiencies and send a second written notice of Substantial Completion. Owner will reinspect the Work. If deficiencies previously noted are not corrected on reinspection, then Contractor shall pay the cost of the reinspection.
E. When Owner concurs that Work is Substantially Complete, Owner will issue a Certificate of Substantial Completion, accompanied by Contractor's list of items to be completed or corrected as verified by Owner.
F. A punch list examination will be performed upon Substantial Completion. One follow-up review of punch list items for each discipline will be provided. If further Site visits are required to review punch list items due to incompleteness of the Work by Contractor, Contractor shall reimburse Owner for costs associated with these visits.

1.4 FINAL COMPLETION

A. Final Completion occurs when Work meets requirements for Owner's Final Acceptance. When Contractor considers Work is Finally Complete, submit written certification that:
   1. Contractor has inspected Work for compliance with Contract Documents, and all requirements for Final Acceptance have been met.

2. Except for Contractor maintenance after Final Acceptance, Work has been completed in accordance with Contract Documents and deficiencies listed with Certificate of Substantial Completion have been corrected. Equipment and systems have been tested in the presence of Owner, and are operative.
3. Work is complete and ready for final inspection.

B. In addition to submittals required by Contract Documents, provide submittals required by governing authorities and submit final statement of accounting giving total adjusted Contract Sum, previous payments, and sum remaining due.

C. When Owner finds Work is acceptable and final closeout submittals are complete, Owner will issue final Change Order reflecting approved adjustments to Contract Sum not previously made by Change Order. Should Owner determine that Work is incomplete or Defective:
1. Owner promptly will so notify Contractor, in writing, listing the incomplete or Defective items.
2. Promptly remedy the deficiencies and notify the Owner when it is ready for reinspection.
3. When Owner determines that the Work is acceptable under the Contract Documents, Owner will request Contractor to make closeout submittals.

D. Final adjustments of accounts:
1. Submit a final statement of accounting to Owner, showing all adjustments to the Contract Sum and complete and execute Document 00650 (Agreement and Release of Any and All Claims).
2. If so required, Owner shall prepare a final Change Order for submittal to Contractor, showing adjustments to the Contract Sum that were not previously made into a Contract Modification.

1.5 PROJECT GUARANTEE

A. Requirements for Contractor's guarantee of completed Work are included in Article 9 of Document 00700 (General Conditions). Guarantee Work done under Contract against failures, leaks, or breaks or other unsatisfactory conditions due to defective equipment, materials, or workmanship, and perform repair work or replacement required, at Contractor's sole expense, for period of one year from date of Final Acceptance.

B. Neither recordation of Final Acceptance nor final certificate for payment nor provision of the Contract nor partial or entire use or occupancy of premises by Owner shall constitute acceptance of Work not done in accordance with Contract Documents nor relieve Contractor of liability in respect to express warranties or responsibility for faulty materials or workmanship.

C. Owner may make repairs to Defective Work as set forth in Document 00700 (General Conditions), paragraph 9.3.

D. If, after installation, operation, or use of materials or equipment to be provided under Contract proves to be unsatisfactory to Owner, Owner shall have right to operate and use materials or equipment until said materials and equipment can, without damage to Owner, be taken out of service for correction or replacement. Period of use of Defective materials or equipment pending correction or replacement shall in no way decrease guarantee period required for acceptable corrected or replaced items of materials or equipment.

E. Nothing in this Section 01770 shall be construed to limit, relieve, or release Contractor's, Subcontractors', and equipment suppliers' liability to Owner for damages sustained as result of latent defects in equipment caused by negligence of suppliers' agents, employees,

or Subcontractors. Stated in another manner, warranty contained in the Contract Documents shall not amount to, nor shall it be deemed to be, waiver by Owner of any rights or remedies (or time limits in which to enforce such rights or remedies) it may have for Defective workmanship or Defective materials under laws of this State pertaining to acts of negligence.

1.6 WARRANTIES

A. Execute Contractor's Submittals and assemble warranty documents and operation and maintenance manuals executed or supplied by Subcontractors, suppliers, and manufacturers.
   1. Provide table of contents and assemble in 8½ inches by 11 inches three-ring binder with durable plastic cover, appropriately separated and organized.
   2. Assemble in Specification Section order.

B. Submit material prior to final Application for Payment.
   1. For equipment put into use with Owner's permission during construction, submit within 14 Days after first operation.
   2. For items of Work delayed materially beyond Date of Substantial Completion, provide updated Submittal within 14 Days after acceptance, listing date of acceptance as start of warranty period.

C. Warranties are intended to protect Owner against failure of Work and against deficient, Defective, and faulty materials and workmanship, regardless of sources.

D. Limitations: Warranties are not intended to cover failures that result from the following:
   1. Unusual or abnormal phenomena of the elements
   2. Vandalism after Substantial Completion
   3. Insurrection or acts of aggression including war

E. Related Damages and Losses: Remove and replace Work which is damaged as result of Defective Work, or which must be removed and replaced to provide access for correction of warranted Work.

F. Warranty Reinstatement: After correction of warranted Work, reinstate warranty for corrected Work to date of original warranty expiration or to a date not less than one year after corrected Work was done, whichever is later.

G. Replacement Cost: Replace or restore failing warranted items without regard to anticipated useful service lives.

H. Warranty Forms: Submit drafts to Owner for approval prior to execution. Forms shall not detract from or confuse requirements or interpretations of Contract Documents.
   1. Warranty shall be countersigned by manufacturers.
   2. Where specified, warranty shall be countersigned by Subcontractors and installers.

I. Rejection of Warranties: Owner reserves right to reject unsolicited and coincidental product warranties that detract from or confuse requirements or interpretations of Contract Documents.

J. Term of Warranties: For materials, equipment, systems, and workmanship, warranty period shall be one year minimum from date of Final Completion of entire Work except where:
   1. Detailed Specifications for certain materials, equipment or systems require longer warranty periods.
   2. Materials, equipment or systems are put into beneficial use of Owner prior to Final Completion as agreed to in writing by Owner.

K. Transfer of Warranties: Any warranty shall automatically transfer, without charge, to a subsequent owner who acquires the Project. Any transfer of the Project shall not extend the duration of any warranty.

L. Warranty of Title: No material, supplies, or equipment for Work under Contract shall be purchased subject to any chattel mortgage, security agreement, or under a conditional sale or other agreement by which an interest therein or any part thereof is retained by seller or supplier. Contractor warrants good title to all material, supplies, and equipment installed or incorporated in Work and agrees upon completion of all Work to deliver premises, together with improvements and appurtenances constructed or placed thereon by Contractor, to Owner free from any claim, liens, security interest, or charges, and further agrees that neither Contractor nor any person, firm, or corporation furnishing any materials or labor for any Work covered by Contract shall have right to lien upon premises or improvement or appurtenances thereon. Nothing contained in this paragraph, however, shall defeat or impair right of persons furnishing materials or labor under bond given by Contractor for their protection or any rights under law permitting persons to look to funds due Contractor in hands of Owner.

1.7 TURN-IN

A. Contract Documents will not be closed out and final payment will not be made until all keys and locks issued to Contractor during prosecution of Work are turned in to Owner.

1.8 RELEASE OF CLAIMS

A. Contract Documents will not be closed out and final payment will not be made until Document 00650 (Agreement and Release of Any and All Claims) is completed and executed by Contractor and Owner.

1.9 FIRE INSPECTION COORDINATION

A. Coordinate fire inspection and secure sufficient notice to Owner to permit convenient scheduling (if applicable).

PART 2 PRODUCTS – NOT USED

PART 3 EXECUTION – NOT USED

END OF SECTION

DIVISION 2

SITE CONSTRUCTION

SECTION 02821

CHAIN LINK FENCE AND GATES

PART 1 GENERAL

1.1 REFERENCES

A.	ASTM A121	Standard Specification for Metallic-Coated Carbon Steel Barbed Wire
B.	ASTM A428	Test Method of Weight of Coating on Aluminum coated Iron or Steel Articles
C.	ASTM A653/A653M	Standard Specification for Steel Sheet, Zinc-Coated (Galvanized) or Zinc-Iron Alloy-Coated (Galvannealed) by the Hot-Dip Process
D.	ASTM A824	Standard Specification for Metallic-Coated Steel Marcelled Tension Wire for use with Chain-Link Fence
E.	ASTM A856/A856M 03	Standard Specification for Zinc -5% Aluminum-Mischmetal Alloy-Coated Carbon Steel Wire
F.	ASTM F552	Terminology Relating to Chain-Link Fencing
G.	ASTM F567	Standard Practice for Installation of Chain Link Fence
H.	ASTM F626	Standard Specification for Fence Fittings
I.	ATSM F668	Standard Specification for Polymer-Coated Chain-Link Fence Fabric
J.	ASTM F900	Standard Specification for Industrial and Commercial Swing Gates
K.	ATSM F934	Standard Specification for Standard Colors for Polymer-Coated Chain-Link Fence Materials
L.	ASTM F1043	Standard Specification for Strength and Protective Coatings on Metal Industrial Chain Link Fence Framework
M.	ASTM F1083	Standard Specification for Pipe, Steel, Hot-Dipped Zinc-Coated (Galvanized) Welded, for Fence Structures
N.	ASTM F1234	Protective Coatings on Steel Framework for Fences

1.2 SUBMITTALS

A. Product Data:
   1. Acknowledgement that products submitted meet requirements of standards referenced.
   2. Fabric
   3. Gate hardware
   4. Posts

B. Shop Drawings:
   1. Scaled plan layout showing spacing of components, accessories, fittings, hardware and post anchorage

C. Quality Assurance/Control Submittals:
   1. Certificates:
      a. Mill Certificates
      b. Welder's Certificates, if applicable
   2. Test Reports:
      a. Source quality control test results

3. Manufacturer's Instructions:
   a. Chain link fence and gate installation

1.3 QUALITY ASSURANCE

A. Utilize only AWS certified welders

1.4 DEFINITIONS

A. NPS: Nominal pipe size, in inches
B. Installer or Applicator: Installer or applicator is the person actually installing or applying the product in the field at the Site
   1. Installer and applicator are synonymous

PART 2 PRODUCTS ACCEPTABLE MANUFACTURERS

A. Subject to compliance with the Contract Documents, the following manufacturers are acceptable:
   1. Fence systems:
      a. Cyclone
      b. Page-Wilson Corporation (Page Fence Division)
      c. Anchor Fence, Inc.
      d. Baekert (barbed wire)
      e. Or Approved Equal

1.6 COMPONENTS

A. Chain Link Fabric:
   1. Fabric type:
      a. ASTM F668 polymer-coated steel:
         1) Coated after weaving, 1.2 ounces per square foot.
         2) Color: Black
   2. Wire gage: 9
   3. Mesh size: 2 inch
   4. Selvage treatment:
      a. Top: Knuckled
      b. Bottom: Knuckled
B. Concrete: See Section 03300 (Concrete)
C. Line Posts:
   1. ASTM F1083 pipe:
      a. Schedule 40, NPS, 2 3/8 inch outside diameter, polyester powder-coated (black) over galvanized coating to match fabric color
D. Corner or Terminal Posts:
   1. ASTM F1083 pipe
      a. Schedule 40, NPS, 2 7/8 inch outside diameter, polyester powder-coated (black) over galvanized coating to match fabric color
E. Gate Posts:
   1. ASTM F1083 pipe
      a. Schedule 40, NPS, 3 ½ inch outside diameter, polyester powder-coated (black) over galvanized coating to match fabric color
F. Braces:

1. ASTM F1083 pipe
    a. Schedule 40, NPS, 1 5/8 inch outside diameter, polyester powder-coated (black) over galvanized coating to match fabric color

G. Tension Wire:
1. Top and bottom of fabric
    a. ASTM A824, galvanized steel, Class 3
    b. 6 gage, single strand

H. Framing (steel) Finishes:
    a. ASTM A653/A653M Grade D; hot rolled steel strip, cold formed to pipe configuration; longitudinally welded construction, minimum yield strength of 50 ksi; coating conforming to ASTM F1234 Type B on pipe exterior and interior with polyester powder-coating (black) to match fabric color. All intermediate, terminal, corner, rail, brace, and gate posts shall be Type 1 round.

I. Gate Frame:
1. 1 1/5 inch diameter for fittings and truss rod fabrication. Double swing type

J. Tension Strap:
1. ASTM F626
    a. 1/8 inch thick steel

K. Tension Band:
1. ASTM F626
    a. 3/8 inch thick steel

L. Tie Wire:
1. Aluminum alloy steel wire

M. Fence Fittings (Post and line caps, rail and brace ends, Sleeves-top rail, tie wires and clips, tension and brace bands, truss rods, extension arm)
    a. ASTM F626 with polyester powder-coating (black) to match fabric color

N. Barbed Wire:
1. ASTM A121 zinc-coated steel: Class 3, 0.8 ounces per square foot, with black coating to ASTM A856-03 coating standard
2. $6mm^2$ 12.5 GA, three strand steel wire
3. $3mm^2$ 14 GA, 4-point barbs at 3 IN spacing
4. Provide sharp barbs tightly wrapped around uniformly twisted $6mm^2$ 12.5 GA wires
5. Provide extension arm on each post designed to support barbed wire.

1.7 ACCESSORIES

A. Caps:
1. Sized to post diameter; set screw retainer

B. Fittings:
1. Sleeves, bands, clips, rail ends, tension bars, fastener fittings, and extension arm: Steel

C. Gate Hardware:
1. Center gate stop and drop rod, 180 degree gate hinge per leaf, and hardware for padlock
2. Gate latch

1.8 FINISHES

A. Accessories
1. Polyester powder-coating (black) to match fabric color

1.9 SOURCE QUALITY CONTROL

A. Test related fence construction materials to meet the following standards:

1. Posts and rails:
   a. ASTM F1043, Heavy Industrial

PART 3 EXECUTION

2.1 PREPARATION

A. Stake locations of fence lines and terminal posts. Do not exceed intervals of 500 feet (152.5 m) or line of sight between stakes. Indicate locations of utilities, underground structures, and benchmarks.
B. The area to be fenced shall be uniformly and smoothly graded before beginning fence installation.

2.2 EXCAVATION

A. Excavation for concrete embedded items shall be of the dimensions indicated. Clear loose material from post-holes. Grade area around finished concrete footings.

2.3 INSTALLATION

A. Install in accordance with:
   1. Manufacturer's instructions
   2. Lines and grades as indicated
   3. ASTM F567
B. Do not start fence installation before final grading is complete and finish elevations are established.
C. Drill holes in firm, undisturbed or compacted soil.
D. Set intermediate, terminal, and gate posts plumb, in concrete footings with top of footing 2 inches. Thoroughly compact concrete and finish in a slope or dome to divert water running down the post away from footing.
E. Place fence with bottom edge of fabric at maximum clearance above grade. Correct minor irregularities in earth to maintain maximum clearance.
F. Provide post braces for each gate corner pull and terminal post and first adjacent line post.
G. Place fabric on outside of posts and rails.
H. Install tension bars full height of fabric.
I. Install bracing assemblies at all end and gate posts, as well as side, corner, and pull posts.
   1. Install so that posts are plumb when under correct tension.
J. Pull fabric taut and secure to posts and rails.
   1. Attach fabric to end, corner, and gate posts with tension bars and tension bar clips.
   2. Secure so that fabric remains in tension after pulling force is released.
   3. Secure to posts at not over 15 inches on center, and to rails at not over 24 inches on center, and to tension wire at not over 24 inches on center.
   4. Use U-shaped wire conforming to diameter of pipe to which attached, clasping pipe and fabric firmly with ends twisted at least two full turns.
   5. Bend ends of wire to minimize hazards to persons or clothing.
K. Install post top at each post.
L. Install extension arms and barbed wire.
M. Gates:
   1. Construct with fittings or by welding.
   2. Provide rigid, weatherproof joints.
   3. Ensure right, non-sagging, non-twisting gate.

4. Coat welds with rust preventive paint, color to match pipe.
5. Adjust gates as required so that they operate smoothly.

2.4 ERECTION TOLERANCES

A. Maximum variation from plumb: ¼ inch.
B. Maximum offset from true position: 1 inch.

END OF SECTION

DIVISION 3

CONCRETE

SECTION 03300

CONCRETE

PART 1 GENERAL

1.1 REFERENCES

A.	ACI 304R	Guide for Measuring, Mixing, Transporting and Placing Concrete
B.	ASTM A615	Standard Specification for Deformed and Plain Billet-Steel Bars for Concrete Reinforcement
C.	ASTM C150	Standard Specification for Portland Cement
D.	ASTM C94	Standard Specification for Ready-Mixed Concrete
E.	ASTM C33	Concrete Aggregates
F.	ASTM C39	Compressive Strength of Cylindrical Concrete Specimens
G.	ASTM C138	Density (Unit Weight), Yield, and Air Content (Gravimetric) of Concrete
H.	ASTM C143	Slump of Portland Cement Concrete
I.	ASTM C172	Practice for Sampling Freshly Mixed Concrete
J.	ASTM C173	Air Content of Freshly Mixed Concrete by the Volumetric Method
K.	ASTM C231	Air Content of Freshly Mixed Concrete by the Pressure Method
L.	ASTM C309	Liquid Membrane-Forming Compounds for Curing Concrete
M.	ASTM C579	Standard Test Methods for Compressive Strength of Chemical-Resistant Mortars, Grouts, Monolithic Surfacings, and Polymer Concretes
N.	ASTM C531	Standard Test Method for Linear Shrinkage and Coefficient of Thermal Expansion of Chemical-Resistant Mortars, Grouts, Monolithic Surfacings, and Polymer Concretes
O.	ASTM A497	Standard Specification for Steel Welded Wire Reinforcement, Deformed, for Concrete
P.	ASTM C827	Standard Test Method for Change in Height at Early Ages of Cylindrical Specimens of Cementitious Mixtures
Q.	ASTM C1107/C1107M	Standard Specification for Packaged Dry, Hydraulic-Cement Grout (Nonshrink)
R.	Greenbook Section 202 – 1.2	Materials
S.	Greenbook Section 303 – 1.7	Placing Reinforcements
T.	Greenbook Section 303 – 1.10	Concrete Structures

1.2 SUBMITTALS

1. Concrete Mix designs

PART 2 PRODUCTS

2.1 GENERAL

A. Unless otherwise specified, concrete shall have a minimum 28-Day compressive strength of 4,000psi, a maximum aggregate size of 1.0 inch, a minimum of six sacks of cement per cubic yard, and a maximum water content ration of 0.50 by weight.

2.2 MATERIALS

A. Cement: Portland cement conforming to ASTM C150 Type II low alkali and conforming to Greenbook Section 201 – 1.2.
B. Water: Potable, clean, and free from oil, acid, alkali, organic matter, or other deleterious substances, and shall not contain more than 50ppm chlorides as Cl- no more than 50 ppm sulfates as SO_4^{-2}.
C. Aggregates:
   1. Natural aggregate shall be free from deleterious coatings, conforming to ASTM C33, together with all referenced ASTM reference standards, except as modified herein. Aggregates shall not be potentially reactive as defined in Appendix XI of ASTM C33. Aggregates shall be thoroughly and uniformly washed before use.
   2. Fine aggregate shall be hard, dense, durable particles of either sand or crushed stone regularly graded from coarse to fine. Gradation shall conform to ASTM C33. Fine aggregate shall not exceed 40 percent by weight of combined aggregate total, except for concrete with coarse aggregate of less than maximum size ½ inch.
   3. Coarse aggregate shall be:
      a. Natural gravels
      b. A combination of gravels and crushed gravels
      c. Crushed stone, or
      d. A combination of these materials containing no more than 15 percent flat or elongated particles (long dimension more than five times the short dimension). Materials finer than the 200 sieve shall not exceed 0.5 percent.
D. Ready-Mixed Concrete: Ready-mixed concrete shall conform to the requirements of ASTM C94.

2.3 ANCHOR BOLTS

A. Anchor bolts, except those requiring bending to maintain a minimum of 2-inch concrete cover, shall be installed in existing or new concrete using capsule anchors consisting of a 2-part polyester resin and quartz sand aggregate in a sealed glass capsule as manufactured by:
   1. Hilti
   2. Emhard Corporation
   3. Approved Equal

PART 3 EXECUTION

3.1 MIXING

A. Concrete mixing shall conform to ACI 304R, and to the other requirements specified herein.
B. Concrete shall be discharged at the job within 1-1/2 hours after the water has been added to the cement and aggregates mixture. Concrete may be machine mixed at the job site or ready-mixed at the Contractor's option, and shall conform to the following requirements:
   1. Site Mixing: Concrete produced at the site shall be mixed in a batch mixer with a capacity of no less than ½ cubic yard. The minimum mixing time for each batch (from

the time when all solid materials and water are in the drum) shall be 1 ½ minutes for mixers with a capacity of 1 cubic yard or less; for mixers of larger capacity, the mixing time shall be increased 30 seconds for each additional ½ cubic yard or fraction thereof. The mixer shall revolve at a uniform peripheral speed of about 200 fpm. The entire batch shall be discharged before the mixer is recharged.

2. Ready-Mixed Concrete: All concrete constituents for ready mixed concrete shall be batched at the central plant. All central plant and rolling stock equipment and methods shall conform to the requirements of ASTM C94, as applicable.

3.2 PLACING

A. No concrete shall be placed after there is evidence of initial set. Concrete placement shall not be permitted when weather conditions prevent proper placement and consolidation. Consolidation of concrete shall be with internal concrete vibrators supplemented by handspading, rodding, and tamping. Vibrating equipment shall be adequate to thoroughly compact the concrete. Concrete shall be compacted, screeded to grade, and prepared for the specified finish.

3.3 CURING

A. Curing shall begin as soon as free water has disappeared from concrete surfaces after placing and finishing. Curing materials shall be applied and maintained so as to protect the concrete from moisture loss. Water used in curing shall be potable. Unformed surfaces shall be covered with absorptive materials wetted before placing. Absorptive materials or forms used in curing shall be kept continually wet. All concrete shall be moist cured in accordance with Greenbook Section 303 – 1.10.

B. Do not stretch fabric until concrete foundation has cured 28 Days, or when compressive strength is a minimum of 3,000 psi.

3.4 SLUMP

A. Concrete consistency shall be determined by slump tests in accordance with ASTM C143. At least one test shall be made at the commencement of the concrete placement and at the same time standard test cylinders are molded.

3.5 FIELD QUALITY CONTROL

A. Owner will test concrete placed during construction.
   1. Contractor shall cooperate with Owner in obtaining test samples.

B. Tests during Construction:
   1. Strength Test – Procedure:
      a. Three cylinders, 6-inch diameter x 12-inch height, will be taken from each sample per ASTM C172 and ASTM C31.
      b. Per ASTM C39, cylinders will be tested at the following intervals:
         1) One at 7 Days
         2) Two at 28 Days
         3) One at 56 Days, if necessary
   2. Strength Test – Frequency:
      a. Not less than one test each day concrete is placed.
      b. Not less than one test for each 50 cubic yards or major fraction thereof placed in one day.
      c. Not less than one test for each type of concrete poured.
      d. Not less than one test for each concrete structure exceeding 2 cubic yards in volume.

3. Slump Test – Per ASTM C143:
    a. Determined for each strength test sample.
    b. Additional slump tests may be taken.
4. Air Content – Per ASTM C231, C173, and C138:
    a. Determined for each strength test sample.
5. Temperature: Determined for each strength test sample.
6. Unit weight of lightweight concrete:
    a. Determined for each strength test sample.
    b. Sample taken at point of discharge of fresh concrete.

C. Evaluation of Tests:
1. Strength test results: Average of 28-Day strength of two cylinders from each sample.
    a. If one cylinder manifests evidence of improper sampling, molding, handling, curing or testing, strength of remaining cylinder will be test results.
    b. If both cylinders show any of above defects, tests will be discarded.

D. Acceptance of Concrete:
1. Strength level of each type of concrete shall be considered satisfactory if both of the following requirements are met:
    a. Average of all sets of three consecutive strength tests equals or exceeds the required specified 28-Day compressive strength.
    b. No individual strength test falls below the required specified 28-Day compressive strength by more than 500 psi.

END OF SECTION

DRAWINGS

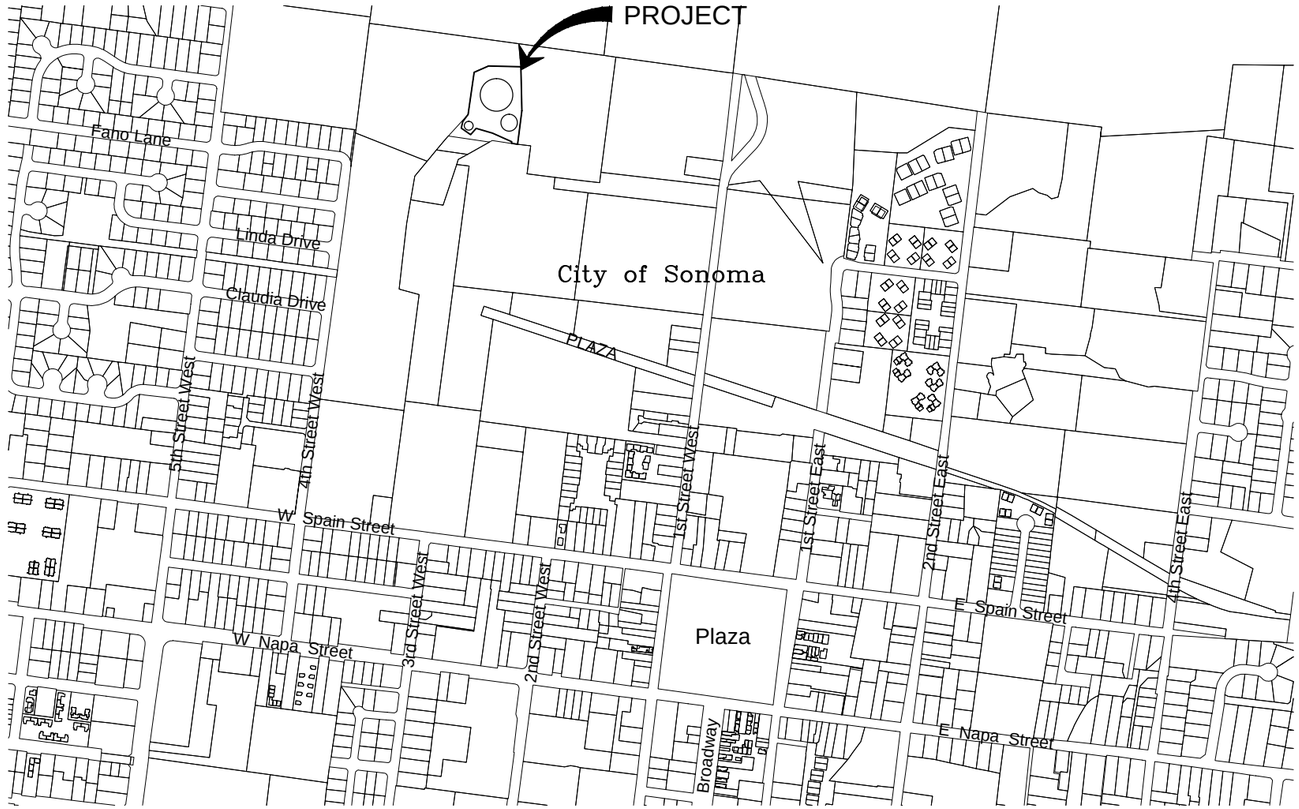

VICINITY MAP
NOT TO SCALE

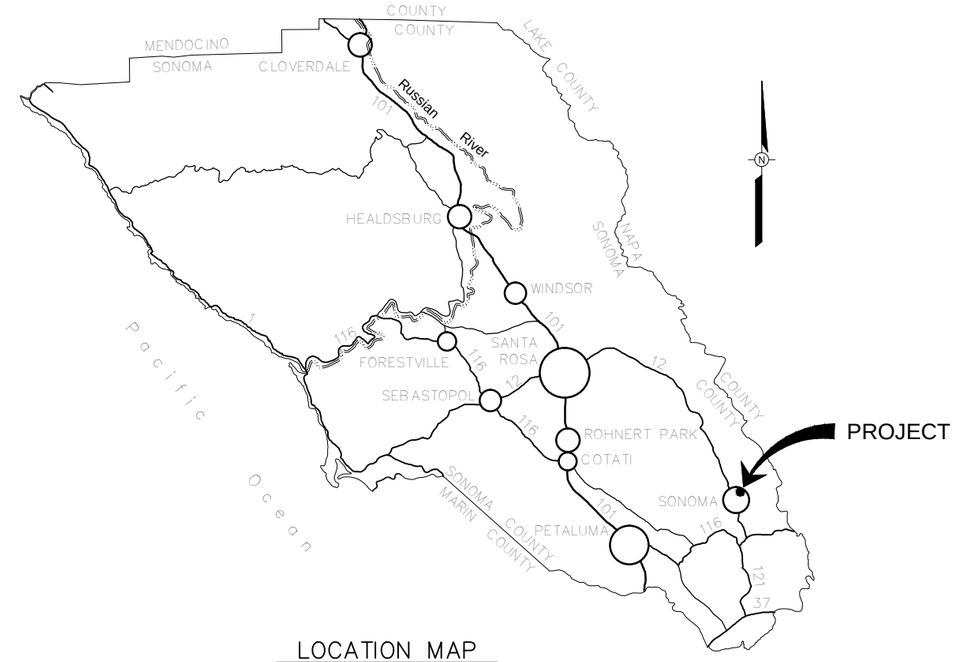

LOCATION MAP
NOT TO SCALE

INDEX TO DRAWINGS

SHEET NO.	DWG. NO.	TITLE
1	G-1	LOCATION, VICINITY MAP AND INDEX TO DRAWINGS
2	C-1	FENCING PLAN
3	D-1	FENCING DETAILS

BAR LENGTH ON ORIGINAL DRAWING EQUALS ONE INCH. ADJUST SCALE ACCORDINGLY

REGISTERED PROFESSIONAL ENGINEER
KEVIN N. BOOKER
No. 61315
CIVIL
STATE OF CALIFORNIA

NO.	DATE	REVISION	BY

SONOMA COUNTY WATER AGENCY

SCALE : NONE
DATE : 7/31/2012
DRAWN : JLW
REVIEWED : Jim Flugum

SONOMA TANKS FENCE REPLACEMENT
INSTALLATION OF SECURITY FENCE, SITE PLAN LOCATION, VICINITY MAP AND INDEX TO DRAWINGS

FILE NAME: FenceDetails_D-1.dwg
CONTRACT NUMBER:
DRAWING NUMBER: G-1
SHEET 1 OF 3

S:\water transmission\tanks\Sonoma\7570-FenceReplacement\FenceDetails_D-1.dwg

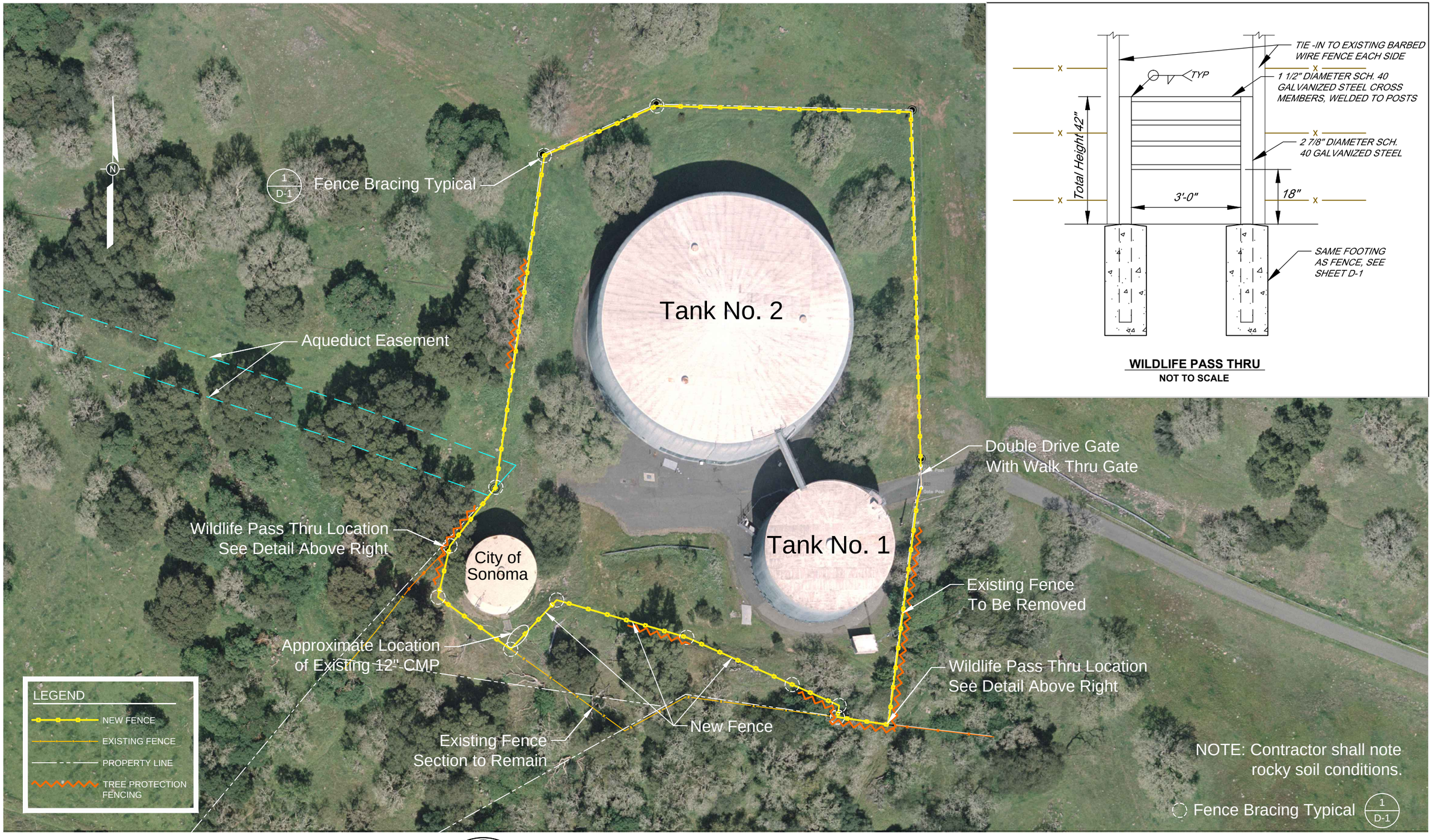

WILDLIFE PASS THRU
NOT TO SCALE

BAR LENGTH ON ORIGINAL
DRAWING EQUALS ONE INCH.
ADJUST SCALE ACCORDINGLY

REGISTERED PROFESSIONAL ENGINEER
KEVIN N. BOOKER
No. 61315
CIVIL
STATE OF CALIFORNIA

NO.	DATE	REVISION	BY

SONOMA COUNTY WATER AGENCY

SCALE : NONE
DATE : 7/31/2012
DRAWN : JLW
REVIEWED : Jim Flugum

SONOMA TANKS FENCE REPLACEMENT
FENCING PLAN

FILE NAME: Sonoma _Tank-Fence.dwg
CONTRACT NUMBER:
DRAWING NUMBER: C-1
SHEET 2 OF 3

S:\Project Administration\Work Groups\Sonoma\7578\Fence\Fence copy\Sonoma _Tank-Fence.dwg

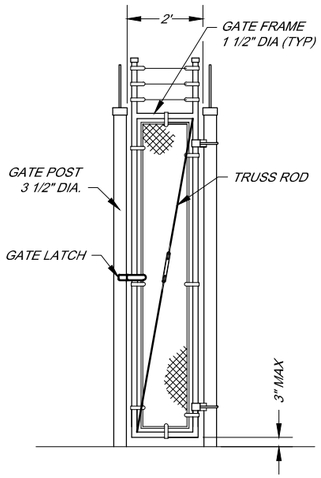

2' WALK THRU GATE DETAIL

NOT TO SCALE

Use Property Line Detail (6" Off Property Line)
Unless Otherwise Indicated on Plan

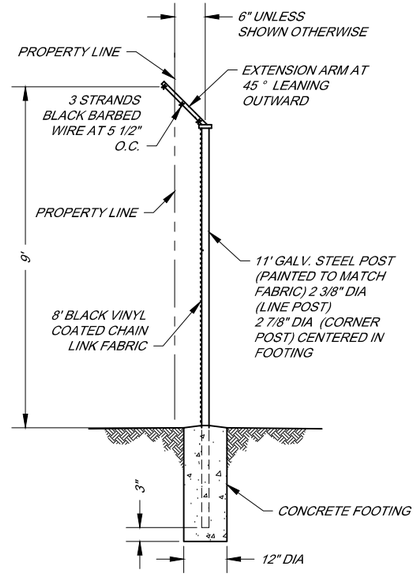

TYPICAL FENCE SECTION

NOT TO SCALE

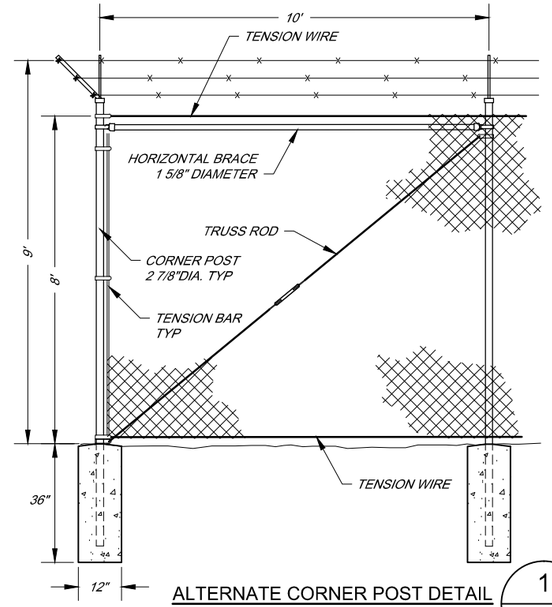

ALTERNATE CORNER POST DETAIL

1 / C-1

NOT TO SCALE

(AT EACH SIDE OF ANGLE POINT)

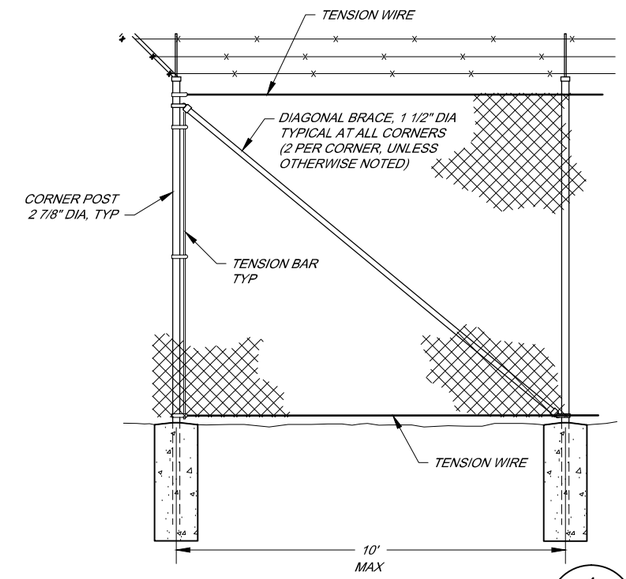

TYPICAL FENCE CORNER BRACING

1 / C-1

NOT TO SCALE

(AT EACH SIDE OF ANGLE POINT)

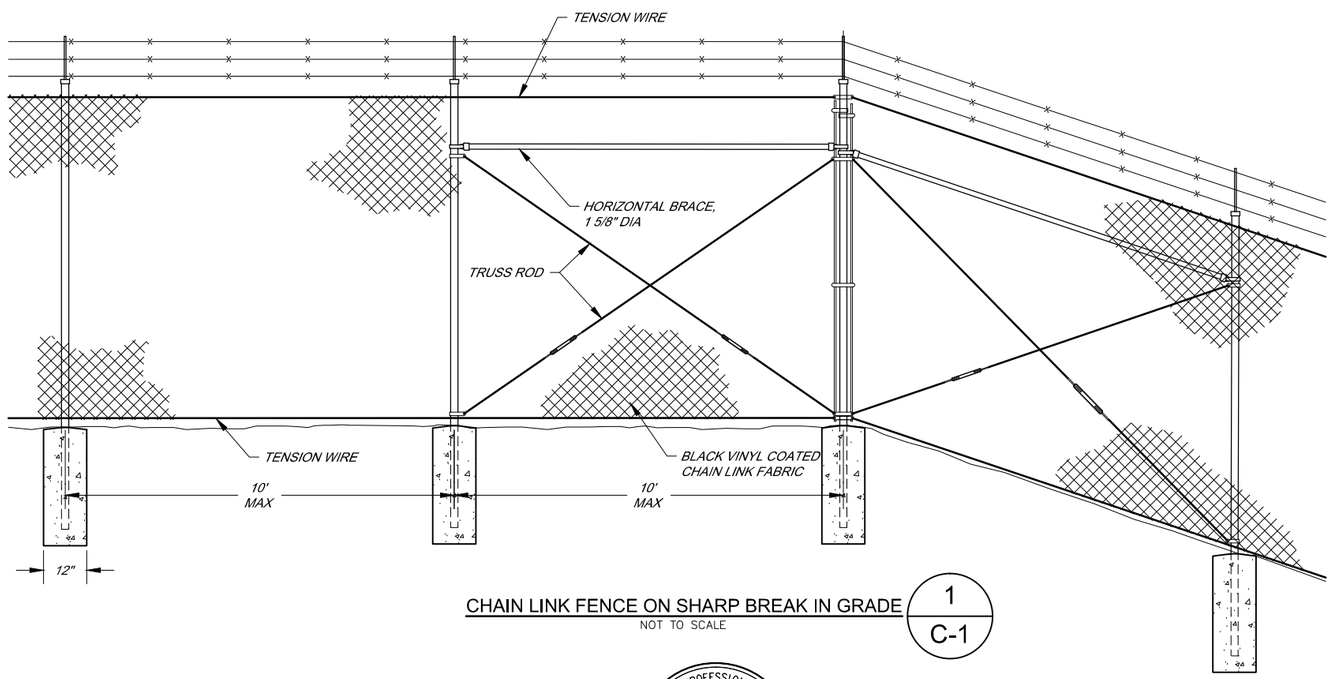

CHAIN LINK FENCE ON SHARP BREAK IN GRADE

1 / C-1

NOT TO SCALE

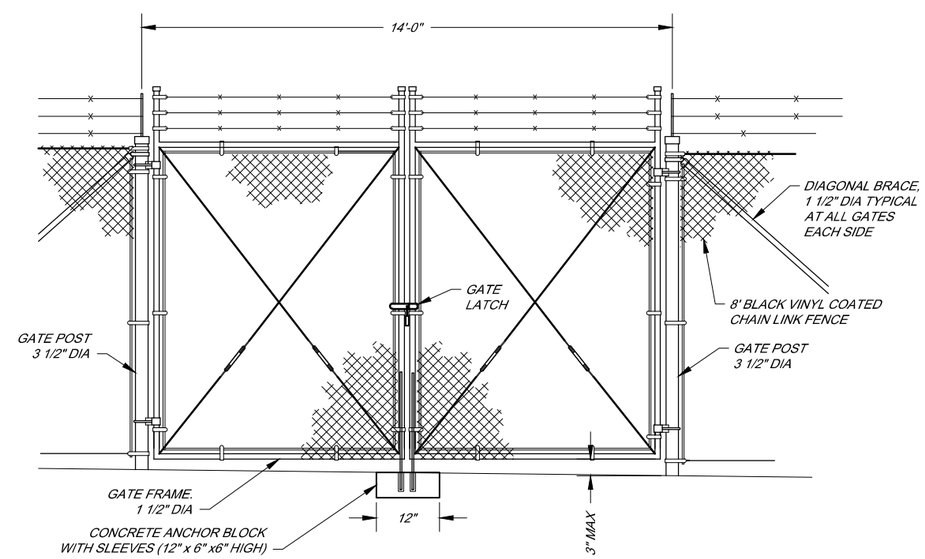

14' DOUBLE DRIVE GATE

(1 REQUIRED)

NOT TO SCALE

BAR LENGTH ON ORIGINAL DRAWING EQUALS ONE INCH. ADJUST SCALE ACCORDINGLY

REGISTERED PROFESSIONAL ENGINEER
KEVIN N. BOOKER
No. 61315
CIVIL
STATE OF CALIFORNIA

NO.	DATE	REVISION	BY

SONOMA COUNTY WATER AGENCY

SCALE : NONE
DATE : 7/31/2012
DRAWN : JLW
REVIEWED : Jim Flugum

SONOMA TANKS FENCE REPLACEMENT

INSTALLATION OF SECURITY FENCE
FENCING DETAILS

FILE NAME: FenceDetails_D-1.dwg
CONTRACT NUMBER:
DRAWING NUMBER: D-1
SHEET 3 OF 3

S:\water transmission\tanks\Sonoma\7570-FenceReplacement\FenceDetails_D-1.dwg 7/31/2012