For accessibility assistance with this document, please contact the Sonoma County Water Agency Technical Writing Section at (707) 547-1900, Fax at (707) 544-6123, or TDD through the California Relay Service (by dialing 711).

CONTRACT NO.
70-712-7 #7

PROJECT MANUAL

FOR

# Sonoma Valley County Sanitation District, Sewer Trunk Replacement (Agua Caliente Creek Crossing)

MARCH 2015

DOCUMENT 00001

# PROJECT MANUAL

for

# SONOMA VALLEY COUNTY SANITATION DISTRICT, SEWER TRUNK REPLACEMENT (AGUA CALIENTE CREEK CROSSING)

## SONOMA VALLEY COUNTY SANITATION DISTRICT

**BOARD OF DIRECTORS**

*David Cook*
*Efren Carrillo*
*Susan Gorin, Chair*

**Advertisement Date:** March 2015

**Bid Date:** Tuesday, April 28, 2015

**Contract Number:** 70-712-7 #7


© 2015 Sonoma Valley County Sanitation District

DOCUMENT 00007

**SEALS PAGE**

Sonoma Valley County Sanitation District

REGISTERED PROFESSIONAL ENGINEER
VICTOR H. SWIFT
Victor H Swift
No. 35525
Exp. 09/30/15
CIVIL
STATE OF CALIFORNIA

Victor H. Swift, P. E.

Date: 3-19-15

lmc

END OF DOCUMENT

DOCUMENT 00010

# TABLE OF CONTENTS

STANDARD EDITION

(Volume 1)

## INTRODUCTORY INFORMATION


| Document | Title |
|---|---|
| 00001 | Title Page |
| 00007 | Seals Page |
| 00010 | Table of Contents |


## BIDDING REQUIREMENTS


| Document | Title |
|---|---|
| 00100 | Advertisement for Bids |
| 00200 | Instructions to Bidders |
| 00202 | Pre-Bid Site Visit Vicinity Map |
| 00203 | Bid Submittal Vicinity Map |
| 00210 | Indemnity and Release Agreement |
| 00320 | Geotechnical Data and Existing Conditions |
| 00335 | Hazardous Materials Documentation |
| 00400 | Bid Form |
| 00411 | Bond Accompanying Bid |
| 00420 | Bidder Registration Form |
| 00430 | Subcontractors List |
| 00450 | Statement of Qualifications for Construction Work |
| 00481 | Noncollusion Declaration |


## CONTRACTING REQUIREMENTS


| Document | Title |
|---|---|
| 00505 | Notice of Intent to Award for Construction |
| 00510 | Notice of Award |
| 00520 | Agreement |
| 00550 | Notice to Proceed |
| 00611 | Construction Performance Bond |
| 00612 | Construction Labor and Material Payment Bond |
| 00630 | Guaranty |
| 00650 | Agreement and Release of Any and All Claims |
| 00660 | Substitution Request Form |
| 00670 | Escrow Bid Documents |
| 00680 | Escrow Agreement for Security Deposits in Lieu of Retention |

## CONDITIONS OF THE CONTRACT


| Document | Title |
|---|---|
| 00700 | General Conditions |
| | 1. General |
| | 2. Bidding |
| | 3. Contract Award and Commencement of the Work |
| | 4. Bonds and Insurance |
| | 5. Drawings and Specifications |
| | 6. Construction By Owner or by Separate Contractors |
| | 7. Owner and Payment |
| | 8. Control of the Work |
| | 9. Warranty, Guaranty, and Inspection of Work |
| | 10. Contractor's Organization and Equipment |
| | 11. Prosecution and Progress of the Work |
| | 12. Claims by Contractor |
| | 13. Legal and Miscellaneous |
| | 14. Modifications of Contract Documents |
| | 15. Time Allowances |
| | 16. Working Conditions and Prevailing Wages |
| 00800 | Supplementary Conditions |
| 00805 | Supplementary Conditions – Hazardous Materials |
| 00910 | Addenda |

## SPECIFICATIONS

### Division 1 - General Requirements


| Section | Title |
|---|---|
| 01100 | Summary |
| | – Summary |
| | – Submittals |
| | – Work Covered by Contract Documents |
| | – Bid Items, Allowances, and Alternates |
| | – Work Under Other Contracts |
| | – Future Work |
| | – Work Sequence |
| | – Work Days and Hours |
| | – Shutdown For Discovery of Cultural Resources |
| | – Cooperation of Contractor and Coordination with Other Work |
| | – Partial Occupancy/Utilization Requirements |
| | – Contractor Use of Site |
| | – Air Quality Standards |
| | – Construction Staking and Monument Protection |
| | – Protection of Existing Structures and Underground Facilities |
| | – Permits |
| | – Actual Damages |
| | – Rights-of-Way |
| | – Document Tracking |
| | – Products Ordered in Advance |
| | – Owner-Furnished Products |
| 01200 | Price and Payment Procedures |
| 01250 | Modification Procedures |
| 01315 | Project Meetings |
| 01320 | Progress Schedules and Reports |
| 01330 | Submittal Procedures |
| 01410 | Regulatory Requirements |
| 01411 | Regulatory Requirements – Hazardous Materials |
| 01420 | References and Definitions |
| 01450 | Quality Control |
| 01500 | Temporary Facilities and Controls |
| 01540 | Site Security and Safety |
| 01600 | Product Requirements |
| 01740 | Cleaning |
| 01741 | Construction Material Waste Management Plan |
| 01770 | Contract Closeout |
| 01780 | Project Record Documents |

**Division 2 - Site Construction**


| Section | Title |
|---|---|
| 02110 | Excavation, Removal, and Handling of Hazardous Materials |
| 02116 | Groundwater Disposal |
| 02230 | Site Clearing |
| 02240 | Dewatering |
| 02255 | Shoring |
| 02315 | Excavation, Bedding, Backfill, and Resurfacing |
| 02320 | Well Destruction or Well Lowering |
| 02375 | Hydroseed and Erosion Control Blanket |
| 02446 | Trenchless Installation |
| 02515 | Water Pipe |
| 02535 | Sanitary Sewage Systems |
| 02536 | Manholes, Frames, and Covers |
| 02745 | Asphalt Pavement |


**Division 3 - Concrete**


| Section | Title |
|---|---|
| 03002 | Concrete |
| 03480 | Precast Concrete Structures |


**Division 4 - Masonry (Not Used)**

**Division 5 – Metals**


| Section | Title |
|---|---|
| 05095 | Field Pipe Welding |


**Divisions 6 – 16 (Not Used)**

**DRAWINGS**

(See Drawing List on Drawing No. G-1)

END OF DOCUMENT

# BIDDING REQUIREMENTS

DOCUMENT 00100

# ADVERTISEMENT FOR BIDS

1. **NOTICE.** The Sonoma Valley County Sanitation District ("Owner"), a local district of the State of California, hereby gives notice that it will accept Bids for construction of the following public work:

**Contract Number 70-712-7 #7**
**Sonoma Valley County Sanitation District**
**Sewer Trunk Replacement (Agua Caliente Creek Crossing)**

2. **DESCRIPTION AND LOCATION OF THE WORK.** The Work consists of replacement of approximately 620 linear feet of 21-inch sewer trunk main north of Maxwell Farms Regional Park within public right-of-way and within private property easements, outside the limits of the City of Sonoma, from Old Maple Avenue across Agua Caliente Creek to Buena Vida Drive. The Work includes, but is not limited to, removal, abandonment, and realignment of approximately 620 linear feet of existing 21-inch sewer trunk main and appurtenances, including removal of the above channel crossing of Agua Caliente Creek. Work also includes construction of approximately 639 linear feet of 30-inch fused high density Polyethylene (HDPE) pipe and appurtenances, 239 linear feet each of 24-inch and 12-inch fused HDPE siphon pipes and appurtenances, 133 linear feet each of 36-inch and 24-inch pipe rammed method steel casings under Agua Caliente Creek, 327 linear feet of 36-inch guided bore method steel casings, two precast siphon structures, ten manholes, the removal or abandonment and replacement of two existing lateral sewers, one potable well abandonment, two water service connections, roadway resurfacing, all-weather vehicle access surfacing, and other appurtenances. Bidding Documents contain the full description of the Work.

3. **ESTIMATED PROJECT COST RANGE:** $1,850,000 to $2,150,000.

4. **REQUIRED CONTRACTOR'S LICENSE(S).** A California "A" contractor's license is required to Bid this Contract. Joint ventures must secure a joint venture license prior to award of this Contract. Removal, handling, and/or disposal of hazardous materials may by law require hazardous substance removal certification by the Contractor's State License Board.

5. **CONTACT INFORMATION.**

Mailing address:
Sonoma Valley County Sanitation District
404 Aviation Boulevard
Santa Rosa, CA 95403-9019

Phone: 707-547-1900
Fax: 707-544-6123
Email: BidderQuestions@scwa.ca.gov

Office:
Sonoma Valley County Sanitation District
c/o Sonoma County Water Agency
404 Aviation Boulevard
Santa Rosa, CA 95403-9019

Website address:
*www.sonomacountywater.org*

6. **PROCUREMENT OF BIDDING DOCUMENTS.** Bidders may examine Bidding Documents at Owner's Office. Bidders may obtain hard copies of Bidding Documents upon registration as a

Planholder through Owner's office and payment of a non-refundable fee of $20 for each copy. Owner will accept cash or checks payable to "Sonoma Valley County Sanitation District." Bidding Documents need not be returned to Owner. Bidding Documents contain a reduced set of Drawings. Bidders may arrange to obtain full-size Drawings from Digital Prints & Imaging, 375 Tesconi Circle, Santa Rosa, CA 95401, 707-546-0401, for an additional charge to be paid directly to Digital Prints & Imaging. Electronic Bidding Documents are available on Owner's website.

**7. MANDATORY PRE-BID SITE VISIT.**

| Time | Day | Date | Location |
|---|---|---|---|
| 10:00 a.m. | Tuesday | April 7, 2015 | See Document 00202 (Pre Bid Site Visit Vicinity Map) |
| 2:00 p.m. | Thursday | April 9, 2015 | " |

A map showing the meeting place for the Pre-Bid Site Visits is included in Document 00202 (Pre-Bid Site Visit Vicinity Map) and is available on Owner's website. Bidders must attend one of the Pre-Bid Site Visits and sign an attendance roster as a condition to bidding.

Bidders will be provided the opportunity to investigate conditions or otherwise conduct invasive investigations, explorations, tests, or studies at the Pre-Bid Site Visit, subject to delivering an executed Document 00210 (Indemnity and Release Agreement) and providing an insurance certificate as described therein by noon of the Day prior to the Pre-Bid Site Visit. This will be the Bidders' only opportunity to investigate conditions at the Site. Bidders who intend only to observe Site conditions and not conduct such examinations are not required to provide an executed Document 00210 (Indemnity and Release Agreement) or an insurance certificate for the Pre-Bid Site Visit. The Pre-Bid Site Visit is merely a showing of the Site and existing conditions and will not provide an opportunity for Bidders to have questions answered. Bidders are encouraged, however, to submit written questions. Owner will transmit to all Registered Planholders (all parties recorded as having received Bidding Documents) such Addenda as Owner in its discretion considers necessary in response to written questions. Bidding Documents will not be available at the Pre-Bid Site Visit.

Bidders shall not rely on oral statements. Oral statements will not be binding or legally effective.

Other Pre-Bid Site Visits may be scheduled at Owner's sole discretion, depending on staff availability.

**8. RESTRICTIONS ON SUBSTITUTIONS.** As a limitation on Bidder's privilege to substitute "or equal" items, Owner has found that certain items are designated as Owner standards and certain items are designated to match existing items in use on a particular public improvement either completed or in the course of completion or are available from one source. As to such items, Owner will not permit substitution. Such items are: None.

**9. INSTRUCTIONS.** Bidders shall refer to Document 00200 (Instructions to Bidders) for required documents and items to be submitted in sealed envelopes for deposit into the Bid boxes, located at Owner's Office, and applicable times for submission.

**10.** **STATEMENTS OF QUALIFICATIONS.** Each Bidder shall be required to submit, in accordance with Document 00200 (Instructions to Bidders) and Document 00450 (Statement of Qualifications for Construction Work), a Statement of Qualifications.

**11.** **BID SUBMISSION.** Sealed Bids will be received at Owner's Office (see paragraph 5) until 2:00 p.m., Tuesday, April 28, 2015. Owner's staff will determine official time and will call out the designated time in the Bid reception area of Owner's Office, stating that the period for accepting Bids is closed. The Bid opening will be in accordance with procedures set forth in Document 00200 (Instructions to Bidders).

**12.** **BID PREPARATION COST.** Bidders are solely responsible for the cost of preparing their Bids.

**13.** **CONTRACT TIME.** Work shall be completed within 211 Days from the date when Contract Time commences to run.

**14.** **PAYMENT BONDS.** In accordance with California Civil Code Section 9550, payment bonds as set forth in Document 00200 (Instructions to Bidders) will be required from the successful Bidder.

15. **REGISTRATION PURSUANT TO LABOR CODE SECTION 1725.5 REQUIRED**. All Contractors submitting a Bid for this Project, and any Subcontractors listed therein, must be currently registered and qualified to perform public work pursuant to Labor Code section 1725.5. Owner requires proof of current registration by Contractor and all listed Subcontractors as a condition to Bid on this Project, subject only to the allowances of Labor Code section 1771.1.

**16.** **PREVAILING WAGE LAWS.** This Project is subject to compliance monitoring and enforcement by the Department of Industrial Relations. The successful Bidder must comply with all prevailing wage laws applicable to the Project, and related requirements contained in the Contract Documents. Copies of the state's general prevailing rates of per diem wages for each craft, classification, or type of worker needed to execute the Contract, as determined by Director of the State of California Department of Industrial Relations, are on file at Owner's Office and are deemed included in the Bidding Documents. Upon request, Owner will make copies available to any interested party. Contractor shall post the applicable prevailing wage rates at the Site in addition to all other job site notices prescribed by regulations.

**17.** **SUBSTITUTION OF SECURITIES.** Owner will permit successful Bidder to substitute securities for retention monies withheld to ensure performance of Contract, as set forth in Document 00680 (Escrow Agreement for Security Deposits in Lieu of Retention), in accordance with California Public Contract Code, Section 22300. By this reference, Document 00680 (Escrow Agreement for Security Deposits in Lieu of Retention) is incorporated in full in this Document 00100.

**18.** **RESERVATION OF RIGHTS.** Owner specifically reserves the right, in its sole discretion, to reject any or all Bids, or re-bid, or to waive inconsequential deviations from Bid requirements not involving time, price, or quality of the Work.

By order of the Sonoma County Water Agency's General Manager acting on behalf of Sonoma Valley County Sanitation District.

END OF DOCUMENT

DOCUMENT 00200

# INSTRUCTIONS TO BIDDERS

STANDARD EDITION

TABLE OF CONTENTS


| | | |
|---|---|---|
| 1. | Definitions | 1 |
| 2. | Contact Information | 1 |
| 3. | Minimum Requirements to Bid | 1 |
| 4. | Procurement of Bidding Documents | 3 |
| 5. | Existing Drawings and Geotechnical Data and Hazardous Materials Documentation | 3 |
| 6. | Bidders' Opportunity to Investigate Conditions | 3 |
| 7. | Mandatory Pre-Bid Site Visits | 3 |
| 8. | Substitutions | 4 |
| 9. | Bidder Questions | 5 |
| 10. | Addenda | 5 |
| 11. | Wage Rates | 5 |
| 12. | Other Requirements Prior to Bidding | 5 |
| 13. | Preparation of Bids | 5 |
| 14. | Required Bid Security | 6 |
| 15. | Registration Pursuant to Labor Code Section 1725.5 Required | 6 |
| 16. | Required Subcontractors List | 6 |
| 17. | Required Statement of Qualifications | 6 |
| 18. | Requirement for Separate Sealed Envelopes | 6 |
| 19. | Contents of Envelope "A" - Bid Price | 6 |
| 20. | Contents of Envelope "B" - Bidder Qualifications | 7 |
| 21. | Labeling of Bid EnvelopeS | 7 |
| 22. | Withdrawal of Bids Prior to Bid Opening Time | 7 |
| 23. | Submittal of Bids | 7 |
| 24. | Bid Opening | 7 |
| 25. | Bid Evaluation | 8 |
| 26. | Determination of Apparent Low Bidder (Envelope "A") | 8 |
| 27. | Evaluation of Bidder Responsibility (Envelope "B") | 8 |
| 28. | Public Records Act Requests, Bid Information, and Confidentiality Waiver | 9 |
| 29. | Owner's Right to Reject Bids | 9 |
| 30. | Notice of Intent to Award for Construction | 10 |
| 31. | Bid Protests | 10 |
| 32. | Notice of Award | 10 |
| 33. | Post-Notice of Award Requirements | 10 |
| 34. | Failure to Execute and Deliver Documents | 11 |

35. Return of Bid Security 12
36. Conformed Project Manual 12
37. Modification of Commencement of Work 12
38. Equal Employment Opportunity 12

# INSTRUCTIONS TO BIDDERS

Formal Bids are requested for a general construction contract, or work described in general, as follows:

**SONOMA VALLEY COUNTY SANITATION DISTRICT, SEWER TRUNK REPLACEMENT (AGUA CALIENTE CREEK CROSSING)**

Bid submission: Tuesday, April 28, 2015. Bid submittal deadlines are listed in Document 00100 (Advertisement for Bids) and in paragraph 23 herein.

## 1. DEFINITIONS

A. All abbreviations and definitions of terms used in this Document 00200 are set forth in Document 00700 (General Conditions) and Section 01420 (References and Definitions).

## 2. CONTACT INFORMATION

Mailing address:
Sonoma Valley County Sanitation District
404 Aviation Boulevard
Santa Rosa, CA 95403-9019

Phone: 707-547-1900
Fax: 707-544-6123
Email: BidderQuestions@scwa.ca.gov

Office:
Sonoma Valley County Sanitation District
c/o Sonoma County Water Agency
404 Aviation Boulevard
Santa Rosa, CA 95403-9019

Website address:
www.sonomacountywater.org

## 3. MINIMUM REQUIREMENTS TO BID

A. Minimum requirements for Bidder:

1) Owner will accept Bids only from Bidders duly licensed in accordance with the California Business & Professions Code. A California "A" contractor's license is required to Bid this Contract. Joint ventures must secure a joint venture license prior to award of this Contract. Removal, handling, and/or disposal of hazardous materials may by law require hazardous substance removal certification by the Contractors' State License Board.

2) Bidders must attend one of the Pre-Bid Site Visits and sign an attendance roster as a condition to bidding.

3) The following are minimum requirements for the Bidder to be found responsible to perform the Work.

a. Five years' experience as a continuously operating entity engaged in the performance of similar work.

b. Within the past five years completed three construction projects of a similar nature and complexity with a contract dollar amount of at least $800,000 each. For a project to be considered of similar nature and complexity for this subparagraph 3.A.3)b, it must include, at a minimum, the construction of 350 linear feet of sewer pipe with appurtenant manholes and laterals.

c. Sufficient financial strength, stability and resources as measured by Bidder's equity, debt-to-assets ratio, and capability to finance the Work to be performed.

d. Ability to secure, in accordance with the Contract Documents, the required forms of Construction Performance Bond and Construction Labor and Material Payment Bond.

e. Ability to obtain required insurance with coverage values that meet minimum requirements.

f. Satisfactory experience on public works, including without limitation no history of default termination, excessively delayed completion, or excessive defective work.

B. Minimum requirements for Bidder and its team:

1) Evidence that Bidder and its team, including without limitation its Pipe Ramming, Guided Bore and Jack, and Well Driller Subcontractor(s), or the Bidder to the extent Bidder performs such Work itself (hereafter "designated Subcontractor(s)"), have the human and physical resources of sufficient quantity and quality to perform the Work under Contract Documents in a timely and Specification-compliant manner, to include:

a. Evidence demonstrating Bidder's commitment to project safety and its ability to complete projects in a safe manner.

b. Construction and management organizations with sufficient personnel and requisite disciplines, licenses, skills, experience, and equipment for the Project.

c. Minimum licensing requirements for the Bidder and evidence of requisite licenses for Key Personnel of Bidder or designated Subcontractor, if any.

d. A field organization with skills, experience, and equipment sufficient to perform all on-Site Work and necessary scheduling.

2) Minimum requirements for Key Personnel:

a. Expertise of Key Personnel to accomplish the duties and responsibilities required to perform the Work under Contract Documents. Minimum experience requirements of each Key Personnel include the completion of three projects of similar nature and complexity and three years of experience on projects of similar nature and complexity.

3) Minimum requirements for Pipe Ramming Subcontractor:

a. Evidence that Bidder's named Pipe Ramming Subcontractor, or the Bidder to the extent Bidder performs such Work itself, has the human and physical resources of sufficient quantity and quality to perform those aspects of the Contract in a timely and Specification-compliant manner, to include:

i. Minimum experience requirements including the completion of three projects of similar nature and complexity with a contract dollar amount of at least $60,000 each for pipe ramming casing installation under creeks, and with at least one of the projects including a minimum 100 linear feet of pipe rammed casing, within the past five years.

4) Minimum requirements for Guided Bore and Jack Subcontractor:

a. Evidence that Bidder's named Guided Bore and Jack Subcontractor, or the Bidder to the extent Bidder performs such Work itself, has the human and physical resources of sufficient quantity and quality to perform those aspects of the Contract in a timely and Specification-compliant manner, to include:

i. Minimum experience requirements including the completion of three projects of similar nature and complexity with a contract dollar amount of at least $60,000

each for guided bore and jack casing installations, and with at least one of the projects including a minimum 100 linear feet of guided bore and jack casing within the past five years.

5) Minimum requirements for Well Driller Subcontractor:

a. Evidence that the Bidder's named Well Driller Subcontractor, or the Bidder to the extent Bidder performs such Work itself, has the human and physical resources of sufficient quantity and quality to perform those aspects of the Contract in a timely and Specification-compliant manner, to include:

i. Minimum experience requirements including completion of five well destructions of similar nature and complexity completed within the past five years, and at least two shall be potable water well destructions and at least two shall be groundwater monitoring well destructions.

## 4. PROCUREMENT OF BIDDING DOCUMENTS

A. Bidders may examine and obtain Bidding Documents at Owner's Office at the address listed in paragraph 2, Contact Information.

B. Electronic Bidding Documents are available on Owner's website.

C. Bidders may obtain hard copies of Bidding Documents upon registration as a Planholder through Owner's office and payment of a non-refundable fee of $20 for each copy. Owner will accept cash or checks payable to "Sonoma Valley County Sanitation District." Bidding Documents need not be returned to Owner. Bidding Documents contain a reduced set of Drawings. Bidders may arrange to obtain full-size Drawings as described in Document 00100 (Advertisement for Bids).

## 5. EXISTING DRAWINGS AND GEOTECHNICAL DATA AND HAZARDOUS MATERIALS DOCUMENTATION

A. Bidders may examine any available existing conditions information (e.g., record documents, specifications, studies, drawings of previous work) and applicable environmental assessment information (if any) regarding the Project at the Owner's Office by giving Owner reasonable advance notice. Documents may also be available at Owner's website. Document 00320 (Geotechnical Data and Existing Conditions) and Document 00335 (Hazardous Materials Documentation) apply to all supplied existing conditions information and geotechnical reports and all other information supplied regarding existing conditions either above ground or below ground.

## 6. BIDDERS' OPPORTUNITY TO INVESTIGATE CONDITIONS

A. Site visit Attendees will be provided the opportunity to investigate conditions or otherwise conduct invasive investigations, explorations, tests, or studies at the Pre-Bid Site Visit, subject to delivering an executed Document 00210 (Indemnity and Release Agreement) and providing an insurance certificate as described therein by noon of the Day prior to the Pre-Bid Site Visit. This will be the Attendees' only opportunity to investigate conditions at the Site. Attendees who intend only to observe Site conditions at the Pre-Bid Site Visit and not conduct such examinations are not required to provide an executed Document 00210 (Indemnity and Release Agreement) or an insurance certificate for the Pre-Bid Site Visit.

## 7. MANDATORY PRE-BID SITE VISITS

A. Owner will conduct Pre-Bid Site Visits at the times and locations listed.

| Time | Day | Date | Location |
|---|---|---|---|
| 10:00 a.m. | Tuesday | April 7, 2015 | See Document 00202 (Pre Bid Site Visit Vicinity Map) |
| 2:00 p.m. | Thursday | April 9, 2015 | " |

B. Pre-Bid Site Visits will occur at the Site on each day and time listed. Bidder is required to attend only one of the Pre-Bid Site Visits. A map showing the meeting place for the Pre-Bid Site Visit(s) is included in Document 00202 (Pre-Bid Site Visit Vicinity Map).

C. Other Pre-Bid Site Visits may be scheduled at Owner's sole discretion, depending on staff availability.

D. The Pre-Bid Site Visit is merely a showing of the Site and existing conditions and will not provide an opportunity for Bidders to have questions answered. Bidders are encouraged, however, to submit written questions. Bidding Documents will not be available at the Pre-Bid Site Visit. Attendees who would like copies of the Bidding Documents must register with Owner as a Planholder.

E. Bidders shall not rely on oral statements. Oral statements will not be binding or legally effective.

**8. SUBSTITUTIONS**

A. Bidders must base their Bids on products and systems specified in Contract Documents or listed by name in Addenda.

B. Except as provided herein, Owner will consider substitution requests only for "or equal items." Bidders wanting to use "or equal" item(s) shall submit Document 00660 (Substitution Request Form) no later than 14 Days prior to submitting their Bids. After that date, Owner will not accept "or equal" substitution requests. To assess "or equal" acceptability of product or system, submittals of substitutions shall contain the information required in Document 00660 (Substitution Request Form) and set forth in Section 01600 (Product Requirements). Insufficient information will be grounds for rejection of substitution. Owner shall, within a reasonable period of time after having received a Request for Substitution, issue in writing its decision as to whether the proposed substitute item is an Equal item. Owner's decision shall be conclusive on all Bidders.

C. Approved substitutions shall be listed in Addenda and become part of the Contract Documents.

D. As further limitation on Bidder's privilege to substitute items, Owner has found that:

1) Certain items are designated as Owner standards and certain items are designated to match existing items in use on a particular public improvement, either completed or in the course of completion. Items that fall in this category include:

a. None.

2) Certain items are designated in order that a field test or experiment may be made to determine the product's suitability for future use. Items that fall in this category include:

a. None.

3) Certain necessary items are only available from one source. Items that fall in this category include:

a. None.

E. As to such items listed above, Owner will not permit substitution.

F. Substitutions may be requested after submitting Bids and Award of Contract only in accordance with requirements specified in Section 01600 (Product Requirements).

**9. BIDDER QUESTIONS**

A. Bidders must direct all questions about the meaning or intent of Bidding Documents to Owner in writing (see paragraph 2, Contact Information). Inquiries must include the full name of the Project. Owner may not answer questions received less than ten Days prior to the date for opening Bids. Only questions answered by formal written Addenda will be binding. Oral and other interpretations or clarifications will be without legal effect.

**10. ADDENDA**

A. Owner will respond to questions and issue interpretations or clarifications as Owner, in its discretion, considers necessary, in the form of Addenda. Addenda may also be issued to modify the Bidding Documents as deemed advisable by Owner. Addenda will be written and will be issued to each Registered Planholder to the address, fax number, or email supplied to Owner by Bidder.

B. Owner may, in its discretion, choose to delay issuance of addenda in order to address several issues at once. Owner will endeavor to issue addenda in a timely manner.

C. Addenda shall be acknowledged by number with signature in Document 00400 (Bid Form) and shall be part of the Contract Documents. A complete listing of Addenda may be secured from Owner upon written request (see paragraph 2, Contact Information).

**11. WAGE RATES**

A. State prevailing wage rates are applicable to the Project. Copies of the state's general prevailing rates of per diem wages for each craft, classification, or type of worker needed to execute the Contract, as determined by Director of the State of California Department of Industrial Relations, are on file at Owner's Office and are deemed included in the Bidding Documents. Upon request, Owner will make copies available to any interested party. Copies of state wage rates are also available at www.dir.ca.gov/labor_law.html.

B. Contractor shall post the applicable state prevailing wage rates at the Site.

**12. OTHER REQUIREMENTS PRIOR TO BIDDING**

A. Submission of Bid signifies Bidder's careful examination of Bidding Documents and complete understanding of the nature, extent, and location of Work to be performed. As a condition to Bidding, Bidder must complete tasks listed in Document 00520 (Agreement), Article 5. Submission of Bid shall constitute Bidder's express representation to Owner that Bidder has fully completed these tasks.

**13. PREPARATION OF BIDS**

A. Bidders must submit Bids in accordance with this Document 00200.

B. All Bidders must submit Bids using, where applicable, documents supplied in these Bidding Documents, including without limitation Document 00400 (Bid Form), Document 00420

(Bidder Registration Form), Document 00430 (Subcontractors List), and Document 00450 (Statement of Qualifications for Construction Work). Bids must be full and complete. Bidders must complete all Bid items and supply all information required by Bidding Documents. Bidders may not modify the Bid Form or qualify their Bids. Bidders must submit clearly and distinctly written Bids. Bidders must clearly make any changes in their Bids by crossing out original entries, entering new entries, and initialing new entries.

C. The submission of a Bid does not commit Owner to award a contract for the Project, to pay costs incurred in the preparation of a Bid, or to procure or contract for any goods or services.

**14. REQUIRED BID SECURITY**

A. Bidders must submit with their Bids either cash, a cashier's check, or certified check from a responsible bank in the United States, or corporate surety bond furnished by a surety authorized to do business in the State of California, of not less than ten percent of amount of Total Bid price, payable to "Sonoma Valley County Sanitation District." All Bidders choosing to submit a surety bond must submit it on the required form, Document 00411 (Bond Accompanying Bid).

**15. REGISTRATION PURSUANT TO LABOR CODE SECTION 1725.5 REQUIRED**

A. All Contractors and Subcontractors who will perform any portion of the Work must be currently registered and qualified to perform public work pursuant to Labor Code Section 1725.5. Owner requires proof of current registration by Bidder and all Subcontractors listed on Document 00430 (Subcontractors List) as a condition to Bid on this project, subject only to the allowances of Labor Code section 1771.1.

**16. REQUIRED SUBCONTRACTORS LIST**

A. All Bidders must submit with their Bids the required information on all Subcontractors in Document 00430 (Subcontractors List) for those Subcontractors who will perform any portion of Work, including labor, rendering of service, or specially fabricating and installing a portion of the Work or improvement according to detailed drawings contained in the plans and specifications, in excess of one half of one percent of total Bid. Violation of this requirement may result in Bid being deemed non-responsive and not being considered.

**17. REQUIRED STATEMENT OF QUALIFICATIONS**

A. In order for a Bidder to be eligible to Bid on this Contract, Bidder must submit a Statement of Qualifications responsive to the requirements identified in Document 00450 (Statement of Qualification for Construction Work) ("SOQ"), including without limitation qualification information for Subcontractors and schedulers, if any. Information in the SOQ shall be current.

**18. REQUIREMENT FOR SEPARATE SEALED ENVELOPES**

A. Owner will receive Bids in two separate opaque sealed 10" x 13" envelopes, labeled Envelope "A" and Envelope "B," each containing the respective items described in paragraphs 19 and 20 of this Document 00200.

**19. CONTENTS OF ENVELOPE "A" - BID PRICE**

A. Envelope "A" shall include:

1) Document 00400 (Bid Form) completed in accordance with paragraph 13 of this Document 00200.

2) Bid security completed in accordance with Document 00411 (Bond Accompanying Bid) and with paragraph 14 of this Document 00200.

3) Document 00430 (Subcontractors List) in accordance with paragraph 15 of this Document 00200 and Document 00430 (Subcontractors List).

4) Document 00481 (Noncollusion Declaration).

**20. CONTENTS OF ENVELOPE "B" - BIDDER QUALIFICATIONS**

A. Envelope "B" shall include:

1) Statement of Qualifications including all necessary attachments and supporting documents submitted in accordance with paragraph 17 of this Document 00200 and Document 00450 (Statement of Qualifications for Construction Work).

2) Document 00420 (Bidder Registration Form). Bidder must complete this form and include comprehensive answers to all questions.

**21. LABELING OF BID ENVELOPES**

A. Bidder shall mark its Bid envelopes on the outside with Bidder's name and the following:

BID FOR THE SONOMA VALLEY COUNTY SANITATION DISTRICT,
CONTRACT NUMBER 70-712-7 #7,
SONOMA VALLEY COUNTY SANITATION DISTRICT, SEWER TRUNK REPLACEMENT
(AGUA CALIENTE CREEK CROSSING)
"Envelope A" or "Envelope B" (as appropriate)

**22. WITHDRAWAL OF BIDS PRIOR TO BID OPENING TIME**

A. Bidders may withdraw their Bids at any time prior to the Bid opening time fixed in this Document 00200, only by written request for the withdrawal of Bid filed with Owner. Bidder or its duly authorized representative shall execute request to withdraw Bid.

**23. SUBMITTAL OF BIDS**

A. Sealed Bids will be received on Tuesday, April 28, 2015 at Owner's Office at the address listed in paragraph 2, Contact Information, and as shown in the map provided in Document 00203 (Bid Submittal Vicinity Map).

B. Owner's staff will determine official time and will call out the specified time in the Bid reception area of Owner's Office.

C. Envelope "A" shall be due by **2:00 p.m.**

D. Envelope "B" shall be due by **3:00 p.m.**

E. All Bid envelopes will be time-stamped by Owner to reflect their submittal time.

**24. BID OPENING**

A. Owner's staff will determine official time and will call out the specified time in the Bid reception area of Owner's Office.

B. Owner will open all Bidders' Envelopes "A" at 3:00 p.m. on the date specified in paragraph 23 above, initially evaluate them for responsiveness, and determine an Apparent Low Bidder as specified herein. Owner will not open Envelopes "B" publicly and, except for the Apparent Low Bidder's Envelope "B" (or as otherwise provided in this Document 00200), they will remain unopened.

## 25. BID EVALUATION

A. In evaluating Bids, Owner will consider whether or not the Bids comply with the prescribed requirements, unit prices, and other data, as may be requested in Document 00400 (Bid Form) or prior to the Notice of Award. Owner will also consider Bidders' qualifications.

## 26. DETERMINATION OF APPARENT LOW BIDDER (ENVELOPE "A")

A. Apparent Low Bid will be based solely on the total amount of all Bid items based on assumptions contained in Document 00400 (Bid Form). All Bidders are required to submit Bids on all Bid items.

B. Discrepancies between the multiplication of units of Work and unit prices will be resolved in favor of the unit prices. Discrepancies between the indicated sum of any column of figures and the correct sum thereof will be resolved in favor of the correct sum. Discrepancies between written words and figures will be resolved in favor of the words.

C. Quantities stated in the Bidding Documents are approximate only and are subject to correction upon final measurement of the Work, and are subject further to the rights reserved by Owner to increase or diminish the amount of work under any classification as advantages to design or construction needs require.

## 27. EVALUATION OF BIDDER RESPONSIBILITY (ENVELOPE "B")

A. Owner may determine whether a Bidder is qualified in its sole discretionary judgment.

B. Owner will open Apparent Low Bidder's Envelope "B" and check its contents for compliance with paragraph 20 of this Document 00200 and this paragraph 27. Owner will notify Apparent Low Bidder in writing of any deficiencies found and will provide Bidder the opportunity to respond in writing with reasonable clarifications but will not allow any changes in the nature of Bidder as a business entity.

C. Written clarifications made by Bidder in response to Owner's requests for clarifications during the Bid evaluation process become part of the Bid.

D. If any Apparent Low Bidder is determined to be non-responsive or non-responsible, Owner may open the next Apparent Low Bidder's Envelope "B" pursuant to any procedures determined in Owner's reasonable discretion, and proceed for all purposes as if this Apparent Low Bidder were the original Apparent Low Bidder.

E. In order to evaluate Bidder's ability to perform and furnish the Work in accordance with the Contract Documents to Owner's satisfaction within the prescribed time, Owner may conduct reasonable investigations and reference checks of Bidder, proposed Subcontractors, suppliers and other persons and organizations as Owner deems necessary to assist in the evaluation of any Bid and to establish Bidder's responsibility, qualifications, financial ability, proposed Subcontractors, suppliers, and other persons and organizations. Submission of a Bid constitutes Bidder's consent to the foregoing. Owner shall have the right to consider information provided by sources other than Bidder. Owner shall also have the right to communicate directly with Bidder's surety regarding Bidder's bonds.

F. Bidder's compliance with the minimum qualification requirements in this paragraph will be measured by the experience of both the Bidder itself as well as the Key Personnel identified by Bidder in Document 00450 (Statement of Qualifications for Construction Work) who will have responsible charge of the various major components of the Work. If Bidder subcontracts portions of the Work, Owner, in its determination of whether the minimum

qualification requirements have been met, will consider the qualifications of the Subcontractor's Key Personnel identified by Bidder in Document 00450 (Statement of Qualifications for Construction Work).

G. Except as otherwise provided in this Document 00200 or in Document 00450 (Statement of Qualification for Construction Work), Owner will make final determinations regarding Bidder responsibility based solely upon the SOQ submitted as part of Envelope "B" on Bid day.

## 28. PUBLIC RECORDS ACT REQUESTS, BID INFORMATION, AND CONFIDENTIALITY WAIVER

A. Per the Public Records Act, Owner will make available to the public Bidder's SOQ (if Bidder's Envelope "B" is opened), all correspondence and written questions submitted during the Bid period, all Bid submissions opened in accordance with the procedures of this Document 00200, and all subsequent Bid evaluation information. All submissions not opened will remain sealed and eventually be returned to the submitter. Except as otherwise required by law, Owner will not disclose proprietary financial information submitted that has been designated confidential by Bidder (including, but not limited to, audited financial statements and Part C, Financial Information, in Bidder's SOQ). Any such proprietary financial information that a Bidder believes should be exempted from disclosure shall be specifically identified and marked as such. Blanket-type identification by designating whole pages or sections shall not be permitted and shall be invalid.

B. Upon a request for records regarding this Bid which specifically includes confidential information marked by Bidder in accordance with Paragraph A, above, Owner will notify Bidder within ten Days from receipt of the request. If Owner agrees that the information so marked is proprietary financial information exempt from disclosure, Owner shall refuse to disclose the information and Bidder shall take all appropriate legal action and defend Owner's refusal to produce the information in all forums. If Owner does not agree that the information so marked is exempt from disclosure, Owner will so notify Bidder of a specific time when, in response to the request, the records will be made available for inspection in accordance with the Public Records Act.

C. By submitting a bid, Bidder shall be deemed to have waived any objections to the release of all other information and also to the release of any financial information that was not designated as confidential at the time the bid is submitted.

## 29. OWNER'S RIGHT TO REJECT BIDS

A. Bidder's failure to submit all required documents strictly as required entitles Owner to reject the Bid as non-responsive.

B. Owner will reject all Bids received after the specified time and will return such Bids to Bidders unopened.

C. Owner will reject as non-responsive any Bid not submitted on the required forms.

D. Owner reserves the right in its sole discretion to reject any Bid as non-responsive as a result of any error or omission in the Bid.

E. Owner reserves the right to reject any Bid not clearly written.

F. Owner will reject as non-responsive any Bid submitted without the necessary Bid security.

G. Owner may reject any or all Bids and waive any informalities or minor irregularities in the Bids. Owner also reserves the right, in its discretion, to reject any or all Bids and to re-Bid the Project. Owner reserves the right to reject any or all nonconforming, non-responsive, unbalanced, or conditional Bids, and to reject the Bid of any Bidder if Owner believes that it would not be in the best interest of Project to make an award to that Bidder, whether because the Bid is not responsive or the Bidder is unqualified or of doubtful financial ability or fails to meet any other pertinent standard or criteria established by Owner. For purposes of this paragraph, an "unbalanced Bid" is one having nominal prices for some Bid items and enhanced prices for other Bid items.

**30. NOTICE OF INTENT TO AWARD FOR CONSTRUCTION**

A. Document 00505 (Notice of Intent to Award for Construction) will be posted at Owner's Office and in the main lobby of the County of Sonoma Administration Building, 575 Administration Drive, Santa Rosa, California. Owner will use reasonable efforts to deliver an electronic copy of Document 00505 (Notice of Intent to Award for Construction) to all Bidders who submitted Bids no later than the Business Day after issuance, although any delay or failure to do so will not extend the Bid protest deadline described below.

**31. BID PROTESTS**

A. Any Bid protest must be submitted in writing to Owner (Attention: Contract Administration), before 3:30 p.m. of the fifth Business Day following posting of Document 00505 (Notice of Intent to Award for Construction). Owner's staff will determine official time and will call out the specified time in the Bid reception area of Owner's Office, stating that the period for accepting Bid protests is closed.

B. The initial protest document must contain a complete statement of the basis for the protest. The protest must refer to the specific portion of the document that forms the basis for the protest. The protest must include the name, address, and telephone number of the person representing the protesting party.

C. The party filing the protest must concurrently transmit a copy of the initial protest document and any attached documentation to all other parties with a direct financial interest that may be adversely affected by the outcome of the protest. Such parties shall include all other Bidders who appear to have a reasonable prospect of receiving an award depending upon the outcome of the protest.

D. The procedure and time limits set forth in this paragraph are mandatory and are Bidder's sole and exclusive remedy in the event of Bid protest. Bidder's failure to comply with these procedures shall constitute a waiver of any right to further pursue the Bid protest, including filing a Government Code Claim or legal proceedings. A Bidder may not rely on a protest submitted by another Bidder but must timely pursue its own protest.

**32. NOTICE OF AWARD**

A. If the Contract is to be awarded, it will be awarded to the lowest responsible responsive Bidder. Following completion of all required Owner procedures and receipt of all Owner approvals, Owner will issue Document 00510 (Notice of Award) to successful Bidder.

**33. POST-NOTICE OF AWARD REQUIREMENTS**

A. After Notice of Award, the successful Bidder must execute and submit the following documents as indicated below.

B. Submit the following documents to Owner by 5:00 p.m. of the 20th Day following Notice of Award. Execution of Contract by Owner depends upon approval of these documents:

1) Document 00520 (Agreement): To be executed by successful Bidder. Submit four originals, each bearing an original signature on the signature page and initials on each page.

2) Document 00611 (Construction Performance Bond): To be executed by successful Bidder and surety, in the amount set forth in Document 00611 (Construction Performance Bond). Submit four originals. Liquidated Damages are described in Document 00520 (Agreement).

3) Document 00612 (Construction Labor and Material Payment Bond): To be executed by successful Bidder and surety, in the amount set forth in Document 00612 (Construction Labor and Material Payment Bond). Submit four originals.

4) The Guaranty in the form set forth in Document 00630 (Guaranty). Submit four originals, each bearing an original signature.

5) One complete set of documentary information received or generated by successful Bidder in preparation of Bid prices for its Bid, as set forth in Document 00670 (Escrow Bid Documents).

6) Insurance certificates and endorsements required by Article 4 of Document 00700 (General Conditions). Submit one original set.

C. Owner shall have the right to communicate directly with Apparent Low Bidder's proposed performance bond surety, to confirm the performance bond. Owner may elect to extend the time to receive faithful performance and labor and material payment bonds.

1) If Bidder exercises the option to open an Escrow Account, Owner and Contractor shall, at the time the account is opened, deliver to Escrow Agent a fully executed counterpart of Document 00680 (Escrow Agreement for Security Deposits in Lieu of Retention).

**34. FAILURE TO EXECUTE AND DELIVER DOCUMENTS**

A. Successful Bidder's failure to submit the documents required herein, in a proper and timely manner, entitles Owner to rescind its award and to cause Bidder's Bid security to be forfeited as provided herein.

B. If Bidder to whom Contract is awarded, within the period described in paragraph 33 of this Document 00200, fails or neglects to execute and deliver all required Contract Documents and file all required bonds, insurance certificates, and other documents, Owner may, in its sole discretion, foreclose on Bidder's surety bond, or deposit Bidder's cashier's check or certified check for collection, and retain the proceeds thereof as liquidated damages for Bidder's failure to enter into the Contract Documents. Bidder agrees that calculating the damages Owner may suffer as a result of Bidder's failure to execute and deliver all required Contract Documents would be extremely difficult and impractical and that the amount of Bidder's required Bid security shall be the agreed and presumed amount of Owner's damages. In addition, upon such failure, Owner may determine the next Apparent Low Bidder and proceed accordingly.

**35. RETURN OF BID SECURITY**

A. Owner may retain Bid security of other than the Apparent Low Bidder for a period of 60 Days after issuance of the Notice of Award. After award, Owner will return to the respective unsuccessful Bidders their Bid securities and Bid bonds.

**36. CONFORMED PROJECT MANUAL**

A. Following Award of Contract, Owner may prepare a conformed Project Manual reflecting Addenda issued during bidding, which will, failing objection, constitute the approved Project Manual.

**37. MODIFICATION OF COMMENCEMENT OF WORK**

A. Owner expressly reserves the right to modify the date for the Commencement of Work under the Contract and to independently perform and complete work related to the Project. Owner accepts no responsibility to Contractor for any delays attributed to its need to complete independent work at the Site.

**38. EQUAL EMPLOYMENT OPPORTUNITY**

A. Contractor shall comply with all applicable federal, state, and local laws, rules, and regulations in regard to nondiscrimination in employment because of race, color, ancestry, national origin, religion, sex, marital status, age, medical conditions, disability, or any other reason.

END OF DOCUMENT

DOCUMENT 00202

**PRE-BID SITE VISIT VICINITY MAP**

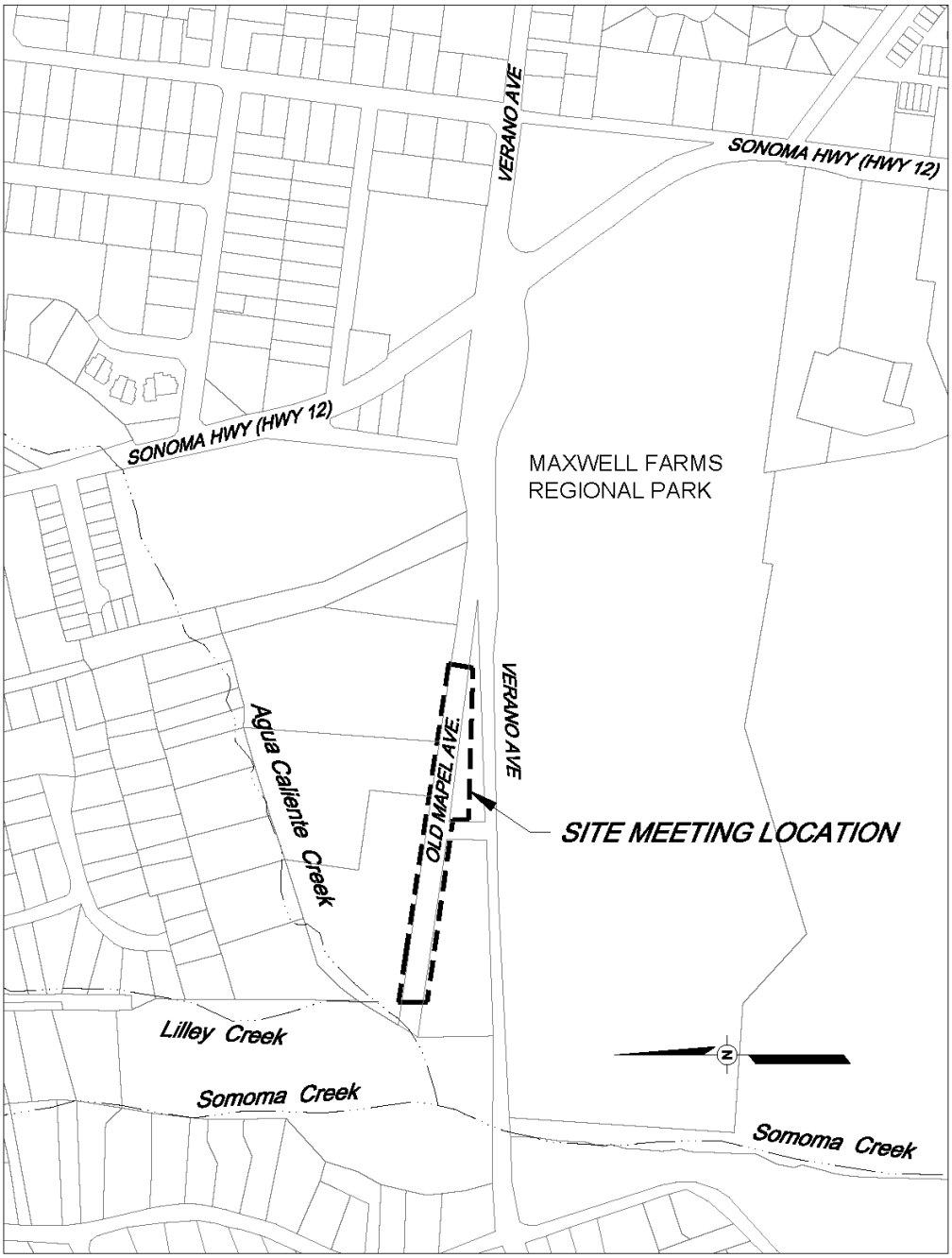


END OF DOCUMENT

DOCUMENT 00203

**BID SUBMITTAL VICINITY MAP**

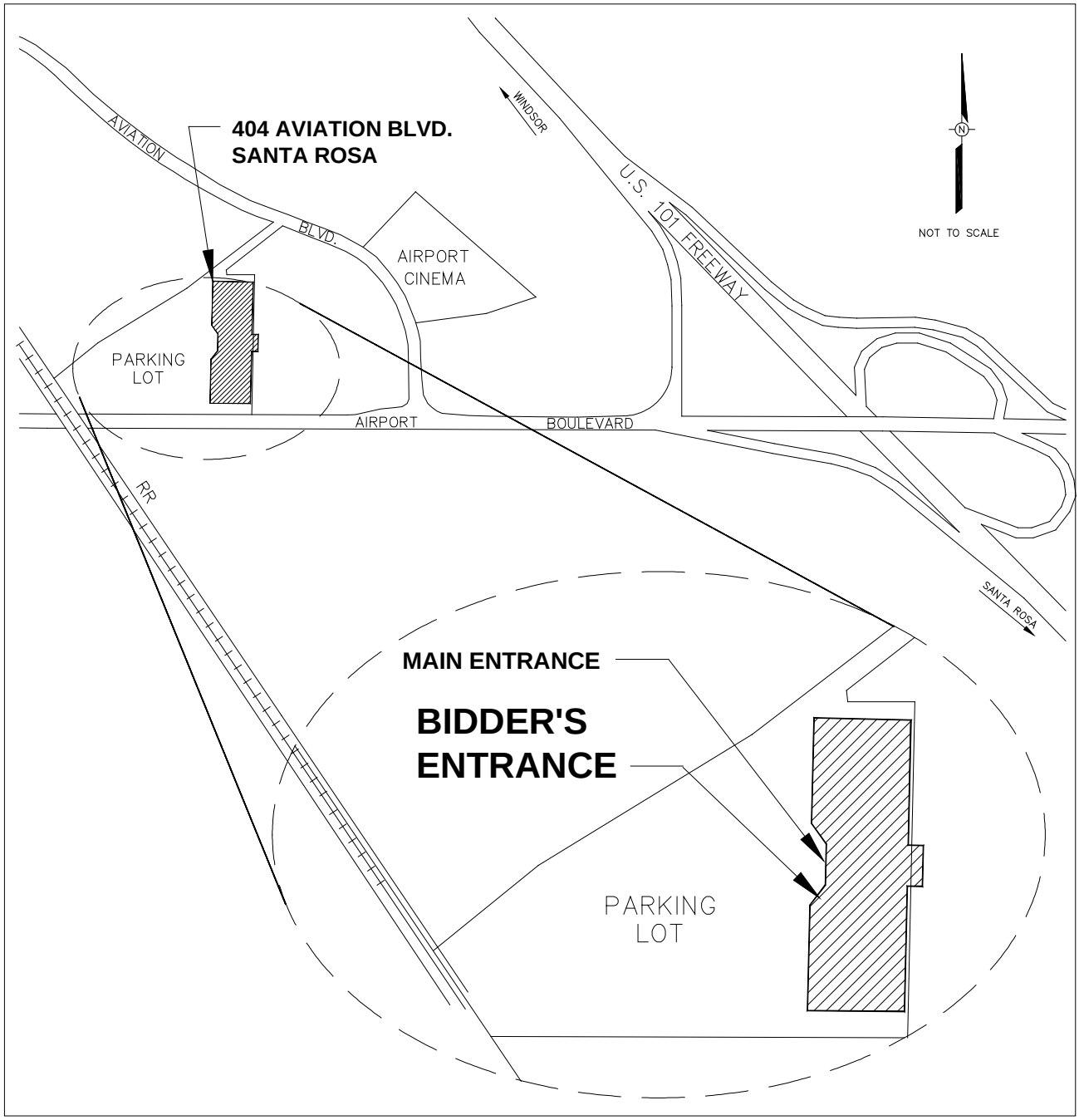


END OF DOCUMENT

DOCUMENT 00210

**INDEMNITY AND RELEASE AGREEMENT**

Dated _____

POTENTIAL BIDDER: _____

OWNER: SONOMA VALLEY COUNTY SANITATION DISTRICT

SITE: _____

PROJECT: SONOMA VALLEY COUNTY SANITATION DISTRICT, SEWER TRUNK REPLACEMENT (AGUA CALIENTE CREEK CROSSING)

In consideration of the above-referenced Owner's permitting the undersigned potential bidder ("Bidder") to have access to, and to conduct investigations, tests and/or inspections on, the Site, Bidder hereby agrees as follows:

1. To the greatest extent permitted by law, Bidder hereby releases, and shall defend, indemnify and hold harmless Owner, and its officers, employees, consultants, representatives, and agents, including without limitation, the Sonoma County Water Agency and its officers, employees, consultants, representatives, and agents, and all other parties having any other interest in the Site, against any claim or liability, including attorney's fees, arising from or relating to any Site-related access, investigation, test, inspection and/or other activity conducted by Bidder or any of Bidder's officers, employees, consultants, representatives, and/or agents, regardless of whether claim or liability is caused in part by the negligence of Owner or by any released and indemnified party.

2. Bidder hereby waives the provisions of California Civil Code Section 1542 which provides as follows:

   > A general release does not extend to claims which the creditor does not know or suspect to exist in his favor at the time of executing the release, which if known by him, must have materially affected his settlement with the debtor.

3. Bidder shall repair any damage to the Site or adjacent property resulting from activities authorized hereunder, and return Site to its original condition as directed by Owner, and comply with and be subject to all other requirements and obligations described or referenced in Document 00320 (Geotechnical Data and Existing Conditions) and Document 00335 (Hazardous Materials Documentation).

4. Attached hereto (or to be delivered separately before Bidder's visit to the Site) is a certificate for comprehensive general liability insurance satisfying the requirements of Document 00700 (General Conditions).

5. Although this Indemnity and Release Agreement is not a Contract Document (see Document 00520 [Agreement]), it shall be fully effective and binding regardless of

whether Bidder submits a Bid for the subject Project, is awarded a contract for the Project, or otherwise.

_____
Name of Bidder

By: _____
Signature

By: _____
Signature

Its: _____
Title (If Corporation: Chairman, President or Vice President)

Its: _____
Title (If Corporation: Secretary, Assistant Secretary, Chief Financial Officer or Assistant Treasurer)

END OF DOCUMENT

DOCUMENT 00320

# GEOTECHNICAL DATA AND EXISTING CONDITIONS

## 1. SUMMARY

A. This Document 00320 sets forth the terms and conditions under which Bidder may review, study, use, or rely upon geotechnical data at or contiguous to the Site, and existing conditions information concerning existing conditions and Underground Facilities at or contiguous to the Site. This Document 00320, the available geotechnical data, and the supplied existing conditions information are not Contract Documents.

## 2. REPORT AND INFORMATION

A. Existence of Reports. Owner, its consultants, and prior contractors may have collected documents providing a general description of the Site and conditions of the Work. These documents may consist of geotechnical reports for and around the Site, contracts, contract specifications, tenant improvement contracts, as-built drawings, utility drawings, and information regarding Underground Facilities. These reports, documents and other information are not part of the Contract Documents.

B. Inspection of Reports. Bidders may inspect geotechnical reports, documents, and information regarding existing conditions available at the Owner's Office, and may obtain copies at cost of reproduction and handling upon Bidder's payment for the costs. These reports, documents, and other information are not part of the Contract Documents. Nevertheless, by submitting a Bid, Bidder accepts full responsibility for reviewing, knowing and understanding the contents of all of these materials.

C. Inclusion in Project Manual. Geotechnical reports may be included in the Project Manual and information regarding existing conditions may also be included in the Project Manual, but neither shall be considered part of the Contract Documents.

D. Available Documentation. The following documentation is available for review for Contract Number 70-712-7 #7 through Owner and on Owner's website:

1. Geotechnical Investigation, Sonoma Valley County Sanitation District
   Agua Caliente Creek Bore and Jack Crossing, El Verano, Sonoma County, California
   Brunsing Associates, Inc.
   August 30, 2012

2. A Cultural Resources Survey and Investigation for the Agua Caliente Creek Sewer Crossing Project
   El Verano, Sonoma County, California
   Eileen Barrow, M.A. / RPA and Thomas M. Origer, M.A. / RPA
   December 9, 2011, revised February 21, 2012

3. A Cultural Resources Survey for the Northern Portion of the Agua Caliente Creek Sewer Crossing Project
   El Verano, Sonoma County, California
   Eileen Barrow, M.A. / RPA
   August 23, 2013

4. Sonoma Valley County Sanitation District Collection System GIS Atlas (excerpt)

## 3. USE OF INFORMATION ON EXISTING CONDITIONS

A. Aboveground Existing Conditions. Under no circumstances shall Owner be deemed to make a warranty or representation of existing aboveground conditions, as-built conditions, or other aboveground actual conditions verifiable by reasonable independent investigation. These conditions are verifiable by Bidder by the performance of its own independent investigation that Bidder must perform prior to bidding and Bidder must not rely on the information supplied by Owner regarding existing conditions. Bidder represents and agrees that in submitting its Bid, it is not relying on any information regarding existing conditions supplied by Owner.

B. Underground Facilities. Information supplied regarding existing Underground Facilities at or contiguous to the Site is based on information furnished to Owner by others (e.g., the owners or builders of such Underground Facilities or others). Except as expressly set forth in this Document 00320, Owner does not assume responsibility for the accuracy, completeness or thoroughness of this information, and Bidder is solely responsible for any interpretation or conclusion drawn from this information. Except as expressly set forth in this Document 00320, Owner will be responsible only for the general accuracy of information regarding Underground Facilities, and only for those Underground Facilities that are owned by Owner. This express assumption of responsibility applies only if Bidder has conducted the independent investigation required of it and discrepancies were not apparent.

## 4. LIMITED RELIANCE PERMITTED ON CERTAIN GEOTECHNICAL INFORMATION

A. Geotechnical Data. Except as expressly set forth in this Document 00320, Owner does not warrant, and makes no representation regarding, the accuracy or thoroughness of any geotechnical data. Bidder represents and agrees that in submitting its Bid, it is not relying on any geotechnical data supplied by Owner, except as specifically set forth herein.

1. Bidder may rely upon the general accuracy of the "technical data" contained in the geotechnical reports and drawings identified above, but only insofar as it relates to subsurface conditions, provided Bidder has conducted the independent investigation required of it and discrepancies were not apparent. The term "technical data" in the referenced reports and drawings shall be limited as follows:
   a. The term "technical data" shall include actual reported depths, reported quantities, reported soil types, reported soil conditions, and reported material, equipment, or structures that were encountered during subsurface exploration.
   b. The term "technical data" does not include, and Bidder may not rely upon, any other data, interpretations, opinions or information shown or indicated in such drawings or reports that otherwise relate to subsurface conditions or described structures.
   c. The term "technical data" shall not include the location of Underground Facilities.
   d. Bidder may not rely on the completeness of reports and drawings for the purposes of bidding or construction. Bidder may rely upon the general accuracy of the "technical data" contained in such reports or drawings.
   e. Bidder is solely responsible for any interpretation or conclusion drawn from any "technical data" or any other data, interpretations, opinions, or information contained in supplied geotechnical data.

## 5. INVESTIGATIONS

A. Before submitting a Bid, each Bidder shall be responsible to obtain such additional or supplementary examinations, investigations, explorations, tests, studies and data

concerning conditions (including, but not limited to, surface, subsurface, and Underground Facilities) at or contiguous to the Site or otherwise, which may affect cost, progress, performance or furnishing of Work or which relate to any aspect of the means, methods, techniques, sequences or procedures of construction to be employed by Bidder and safety precautions and programs incident thereto or which Bidder deems necessary to determine its Bid for performing and furnishing the Work in accordance with the time, price and other terms and conditions of Contract Documents. Bidders shall advise Owner in writing during the Bid period of any questions, suppositions, inferences or deductions Bidders may have for Owner's review and response.

B. Owner has provided time in the period prior to bidding for Bidder to perform these investigations.

**6. ACCESS TO SITE FOR INVESTIGATIONS**

A. During the Pre-Bid Site Visit(s), Owner will provide each Bidder access to the Site to conduct such examinations, investigations, explorations, tests, and studies, as each Bidder deems necessary for submission of a Bid. Bidders must fill all holes and clean up and restore the Site to its former conditions upon completion of such explorations, investigations, tests, and studies. Such investigations may be performed only under the provisions of Document 00200 (Instructions to Bidders) and Document 00700 (General Conditions) including, but not limited to, proof of insurance and obligation to indemnify against claims arising from such investigation work. Each Bidder shall supply all equipment required to perform any investigations as each Bidder deems necessary. Owner has the right to limit the number of pieces of machinery operating at one time due to safety concerns.

END OF DOCUMENT

DOCUMENT 00335

# HAZARDOUS MATERIALS DOCUMENTATION

## 1. SUMMARY

A. This Document 00335 describes hazardous material documentation included with the Contract Documents and use of data therein.

## 2. REPORTS AND INFORMATION

A. Owner, its consultants, contractors, and tenants have prepared documents that may provide a general description of the Site and locations of hazardous materials subject to the Work. This documentation is available through Owner on Owner's website. The documentation is as follows:
   1. Phase I Environmental Site Assessment,
      Sonoma Valley County Sanitation District, Sewer Trunk Main Replacement Project
      Phases IV-A, IV-B, and IV-C
      Studley Street at 6th Street West to Happy Lane,
      Sonoma, California
      October 2011
   2. Sonoma County Water Agency – In House Memo to File
      SVCSD Agua Caliente Creek Siphon Crossing and Trunk Replacement Project - Presence of Asbestos Cement Pipe and Potential Presence of Asbestos Fibers in Manholes
      February 17, 2015

B. Bidders may inspect such documentation at Owner's Office, and copies may be obtained at cost of reproduction and handling upon Bidder's payment for the costs. This documentation is not part of the Contract Documents.

## 3. INVESTIGATIONS

A. Before submitting a Bid, each Bidder shall be responsible for obtaining such additional or supplementary examinations, investigations, explorations, tests, studies, and data concerning conditions (surface, subsurface, and Underground Facilities) at or contiguous to the Site or otherwise that may affect cost, progress, performance or furnishing of Work or which relate to any aspect of the means, methods, techniques, sequences or procedures of construction to be employed by Bidder and safety precautions and programs or projects incident thereto or which Bidder deems necessary to determine its Bid for performing and furnishing Work in accordance with the time, price, and other terms and conditions of the Contract Documents.

B. Owner has provided time in the period prior to bidding for Bidder to perform these investigations.

## 4. ACCESS TO SITE FOR INVESTIGATIONS

A. During the Pre-Bid Site Visit(s), Owner will provide each Bidder access to the Site to conduct such examinations, investigations, explorations, tests, and studies, as each Bidder deems necessary for submission of a Bid. Bidders must fill all holes and clean up and restore the Site to its former conditions upon completion of such explorations, investigations, tests, and studies. Such investigations may be performed only under the provisions of Document 00200 (Instructions to Bidders) and Document 00700 (General

Conditions) including, but not limited to, proof of insurance and obligation to indemnify against claims arising from such investigation work. Each Bidder shall supply all equipment required to perform any investigations as each Bidder deems necessary. Owner has the right to limit the number of pieces of machinery operating at one time due to safety concerns. Any investigation performed by Bidder to verify hazardous materials/waste conditions must comply with the provisions of Document 00805 (Supplementary Conditions – Hazardous Materials), including but not limited to the requirements regarding compliance with all laws, permits, giving of all notices, and indemnification.

END OF DOCUMENT

DOCUMENT 00400

**BID FORM**

To be submitted as part of Envelope "A" by the time and date specified in Document 00200 (Instructions to Bidders), paragraph 1.

TO THE HONORABLE BOARD OF DIRECTORS OF THE SONOMA VALLEY COUNTY SANITATION DISTRICT

THIS BID IS SUBMITTED BY:

_____

(Firm/Company Name)

Re: CONTRACT NUMBER 70-712-7 #7, SONOMA VALLEY COUNTY SANITATION DISTRICT, SEWER TRUNK REPLACEMENT (AGUA CALIENTE CREEK CROSSING)

1. The undersigned Bidder proposes and agrees, if this Bid is accepted, to enter into an agreement with the Sonoma Valley County Sanitation District, a local district of the State of California ("Owner") in the form included in the Contract Documents, Document 00520 (Agreement), to perform and furnish all Work as specified or indicated in the Contract Documents for the Contract Sum and within the Contract Time indicated in this Bid and in accordance with all other terms and conditions of the Contract Documents.

2. Bidder accepts all of the terms and conditions of the Contract Documents, Document 00100 (Advertisement for Bids), and Document 00200 (Instructions to Bidders), including, without limitation, those dealing with the disposition of Bid Security. This Bid will remain subject to acceptance for 90 Days after the day of Bid opening.

3. In submitting this Bid, Bidder represents:

   (a) Bidder has examined all of the Contract Documents and all of the Addenda (receipt of all of which is hereby acknowledged). The Addenda are listed below.

| **Addendum Number** | **Addendum Date** | **Signature of Bidder** |
|---|---|---|
| | | |
| | | |
| | | |
| | | |

(b) Bidder has visited the Site and performed all tasks, research, investigation, reviews, examinations, and analysis and given notices, regarding the Project and the Site, as set forth in Document 00520 (Agreement), Article 5.

(c) Bidder has given Owner prompt written notice of all conflicts, errors, ambiguities, or discrepancies that it has discovered in or among the Contract Documents and as-built drawings and actual conditions and the written resolution thereof through Addenda issued by Owner is acceptable to Contractor.

4. Based on the foregoing, Bidder proposes and agrees to fully perform the Work within the time stated and in strict accordance with the Contract Documents for the following sums of money listed in the following Schedule of Bid Prices:

SCHEDULE OF BID PRICES

All Bid items, including lump sums and unit prices, must be filled in completely. Bid items are described in Section 01100 (Summary of Work). Quote in figures only, unless words are specifically requested.

| ITEM | DESCRIPTION | ESTIMATED QUANTITY | UNIT | UNIT PRICE | TOTAL |
|---|---|---|---|---|---|
| **1.** | Bonds | XXXXXX | Lump Sum | XXXXX | $ |
| **2.** | Insurance | XXXXXX | Lump Sum | XXXXX | $ |
| **3.** | Safety Program and Implementation | XXXXXX | Lump Sum | XXXXX | $ |
| **4.** | Construction Material Waste Management Plan and Implementation | XXXXXX | Lump Sum | XXXXX | $ |
| **5.** | Storm Water Pollution Prevention Plan and Implementation | XXXXXX | Lump Sum | XXXXX | $ |
| **6.** | Mobilization/ Demobilization | XXXXXX | Lump Sum | XXXXX | $ |
| **7.** | Sheet Piling, Shoring, and Bracing | XXXXXX | Lump Sum | XXXXX | $ |
| **8.** | Traffic Control Plan and Implementation | XXXXXX | Lump Sum | XXXXX | $ |
| **9.** | Project Identification Signs | 2 | EA | $ | $ |
| **10.** | Guided Bore Plan Preparation | XXXXXX | Lump Sum | XXXXX | $ |
| **11.** | Pipe Ramming Plan Preparation | XXXXXX | Lump Sum | XXXXX | $ |

| ITEM | DESCRIPTION | ESTIMATED QUANTITY | UNIT | UNIT PRICE | TOTAL |
|---|---|---|---|---|---|
| **12.** | Dewatering Plan Preparation | XXXXXX | Lump Sum | XXXXX | $ |
| **13.** | Site Clearing | XXXXXX | Lump Sum | XXXXX | $ |
| **14.** | Relocate Existing Utilities | XXXXXX | Lump Sum | XXXXX | $ |
| **15.** | Dewatering Plan Implementation | XXXXXX | Lump Sum | XXXXX | $ |
| **16.** | Sewer Diversion and Bypass Pumping | XXXXXX | Lump Sum | XXXXX | $ |
| **17.** | 1-inch Water Service for 154 Fairview Lane | XXXXXX | Lump Sum | XXXXX | $ |
| **18.** | 1-inch Water Service for 157 Fairview Lane | XXXXXX | Lump Sum | XXXXX | $ |
| **19.** | Abandon Existing 4-inch Side Sewer and Provide New 6-Inch PVC Side Sewer | XXXXXX | Lump Sum | XXXXX | $ |
| **20.** | Remove Existing and Provide New 4-inch Lateral Sewer | XXXXXX | Lump Sum | XXXXX | $ |
| **21.** | 6-inch Diameter PVC Sewer Main | 10 | LF | $ | $ |
| **22.** | 8-inch Diameter PVC Sewer Main | 30 | LF | $ | $ |
| **23.** | 12-inch OD Fused SDR 17 HDPE Siphon Pipe (Open Trenched) | 106 | LF | $ | $ |
| **24.** | 12-inch OD Fused SDR 17 HDPE Siphon Pipe (Jacked through Casing) | 133 | LF | $ | $ |
| **25.** | 24-inch OD Fused SDR 17 HDPE Siphon Pipe (Open Trenched) | 106 | LF | $ | $ |
| **26.** | 24-inch OD Fused SDR 17 HDPE Siphon Pipe (Jacked through Casing) | 133 | LF | $ | $ |

| ITEM | DESCRIPTION | ESTIMATED QUANTITY | UNIT | UNIT PRICE | TOTAL |
|---|---|---|---|---|---|
| **27.** | 30-inch OD Fused SDR 41 HDPE Siphon Pipe (Open Trenched) | 166 | LF | $ | $ |
| **28.** | 30-inch OD Fused SDR 41 HDPE Siphon Pipe (Jacked through Casing) | 334 | LF | $ | $ |
| **29.** | Pipe Ramming 24-inch OD Steel Casing | 133 | LF | $ | $ |
| **30.** | Pipe Ramming 36-inch OD Steel Casing | 133 | LF | $ | $ |
| **31.** | Guided Bore Method 36-inch OD Steel Cylinder Encasement | 327 | LF | $ | $ |
| **32.** | 48-inch Diameter Manhole | 2 | EA | $ | $ |
| **33.** | 60-inch Diameter Manhole | 5 | EA | $ | $ |
| **34.** | 60-inch Diameter Drop Manhole | 1 | EA | $ | $ |
| **35.** | 72-inch Diameter Drop Manhole | 1 | EA | $ | $ |
| **36.** | 96-inch Diameter Manhole | 1 | EA | $ | $ |
| **37.** | Connect to, and Modify, Existing 60-inch Diameter Manhole | 1 | EA | $ | $ |
| **38.** | Abandon Existing 60-inch Diameter Manhole | 4 | EA | $ | $ |
| **39.** | Abandon or Remove Existing 21-inch, 8-inch, and 6-inch Diameter Sewer Mains | XXXXXX | Lump Sum | XXXXX | $ |
| **40.** | Remove Existing 22-inch OD Steel Trunk Sewer Main Spanning Agua Caliente Creek | XXXXXX | Lump Sum | XXXXX | $ |
| **41.** | Precast Reinforced Siphon Structure "A" | XXXXXX | Lump Sum | XXXXX | $ |

| ITEM | DESCRIPTION | ESTIMATED QUANTITY | UNIT | UNIT PRICE | TOTAL |
|---|---|---|---|---|---|
| **42.** | Precast Reinforced Siphon Structure "B" | XXXXXX | Lump Sum | XXXXX | $ |
| **43.** | Pipe Ramming Pits Excavation and Preparation | XXXXXX | Lump Sum | XXXXX | $ |
| **44.** | Over-Excavation Below Design Trench Subgrade in Vicinity of Siphon Structure "B" | 294 | CY | $ | $ |
| **45.** | CDF Buttress Fill | 600 | CY | $ | $ |
| **46.** | Guided Bore Method Bore and Jack Pits Excavation | XXXXXX | Lump Sum | XXXXX | $ |
| **47.** | Siphon Structure "A" and "B" Pits Excavation | XXXXXX | Lump Sum | XXXXX | $ |
| **48.** | Abandon or Remove, and Lower Existing Piezometer Wells | 2 | EA | $ | $ |
| **49.** | Abandon Well at 157 Fairview Lane | XXXXXX | Lump Sum | XXXXX | $ |
| **50.** | Relocate Wood Frame Structure at 157 Fairview Lane | XXXXXX | Lump Sum | XXXXX | $ |
| **51.** | All-Weather Aggregate Base Access Roadway and Appurtenances | 125 | SY | $ | $ |
| **52.** | Siphon Structure "B" Permeable Paver Access Roadway | 380 | SY | $ | $ |
| **53.** | Siphon Structure "A" Access Pad Surface Improvements | XXXXXX | Lump Sum | XXXXX | $ |
| **54.** | Old Maple Avenue Roadway Resurfacing, and Concrete Curb and Gutter | XXXXXX | Lump Sum | XXXXX | $ |

| ITEM | DESCRIPTION | ESTIMATED QUANTITY | UNIT | UNIT PRICE | TOTAL |
|---|---|---|---|---|---|
| **55.** | Type "A" Roadway Asphalt Concrete Resurfacing on Fairview Lane | 581 | SY | $ | $ |
| **56.** | Type "B" Roadway Asphalt Concrete Resurfacing on Fairview Lane | 1,062 | SY | $ | $ |
| **57.** | Transitional Roadway Resurfacing on Fairview Lane between Types "A" and "B" | 166 | SY | $ | $ |
| **58.** | Type "A" Roadway Asphalt Concrete Resurfacing on Old Maple Avenue | 1,320 | SY | $ | $ |
| **59.** | Revegetation | XXXXXX | Lump Sum | XXXXX | $ |
| **60.** | All Other Work | XXXXXX | Lump Sum | XXXXX | $ |
| | | | | **TOTAL BID PRICE** | $ |
| **61.** | Contingency Reserve | XXXXXX | XXXXXX | XXXXX | $50,000.00 |
| | | | | **TOTAL** | $ |

Total: _____
(Words)

5. Subcontractors for work included in all Bid items are listed on the attached Document 00430 (Subcontractors List).

6. The undersigned Bidder understands that Owner reserves the right to reject this Bid.

7. If written notice of the acceptance of this Bid, hereinafter referred to as Notice of Award, is mailed or delivered to the undersigned Bidder within the time described in paragraph 2 of this Document 00400 or at any other time thereafter unless the Notice of Award is withdrawn, the undersigned Bidder will execute and deliver the documents required by Document 00200 (Instructions to Bidders) within the times specified therein. These documents include, but are not limited to, Document 00520 (Agreement), Document 00611 (Construction Performance Bond), and Document 00612 (Construction Labor and Material Payment Bond).

8. Notice of Award or request for additional information may be addressed to the undersigned Bidder at the address set forth below.

9. The undersigned Bidder herewith encloses cash, a cashier's check, or certified check of or on a responsible bank in the United States, or a corporate surety bond furnished by a surety authorized to do a surety business in the State of California, in form specified in Document 00200 (Instructions to Bidders), in the amount of ten percent (10%) of the Total Bid Price and made payable to "Sonoma Valley County Sanitation District."

10. The undersigned Bidder agrees to commence Work under the Contract Documents on the date established in Document 00700 (General Conditions) and to complete all work within the time specified in Document 00520 (Agreement). The undersigned Bidder acknowledges that Owner has reserved the right to delay or modify the commencement date. The undersigned Bidder further acknowledges Owner has reserved the right to perform independent work at the Site, the extent of such work may not be determined until after the opening of the Bids, and that the undersigned Bidder will be required to cooperate with such other work in accordance with the requirements of the Contract Documents.

11. The undersigned Bidder agrees that, in accordance with Document 00700 (General Conditions), liquidated damages for failure to complete all Work in the Contract within the time specified in Document 00520 (Agreement) shall be as set forth in Document 00520 (Agreement).

12. The names of all persons interested in the foregoing Bid as principals are:

(IMPORTANT NOTICE: If Bidder or other interested person is a corporation, give the legal name of corporation, state where incorporated, and names of president and secretary thereof; if a partnership, give name of the firm and names of all individual co-partners composing the firm; if Bidder or other interested person is an individual, give first and last names in full).

**NAME OF BIDDER:** _____
licensed in accordance with an act for the registration of Contractors, and with license number: _____ Expiration: _____.

**REGISTRATION PURSUANT TO LABOR CODE SECTION 1725.5:**
Contractor's registration number: _____

_____ _____
Where incorporated, if applicable

_____

_____
Principals

I certify (or declare) under penalty of perjury under the laws of the State of California that the foregoing is true and correct.

_____
Signature of Bidder

_____
Date of Execution

_____
Place of Execution

NOTE: If Bidder is a corporation, set forth the legal name of the corporation together with the signature of the officer or officers authorized to sign contracts on behalf of the corporation. If Bidder is a partnership, set forth the name of the firm together with the signature of the partner or partners authorized to sign contracts on behalf of the partnership.

Business Address: _____
_____
_____

Contractor's Representative(s), (name, title): _____
_____

Officers authorized to sign contracts: _____
_____
_____

_____
Signature of Officer

_____
Title

_____
Date of Execution

_____
Place of Execution

Telephone Number(s): _____

Fax Number(s): _____

Email address(es): _____

Date of Bid: _____

END OF DOCUMENT

DOCUMENT 00411

**BOND ACCOMPANYING BID**

KNOW ALL BY THESE PRESENTS:

That the undersigned _____ [Name of Contractor] as Principal and the undersigned as Surety are held and firmly bound unto the SONOMA VALLEY COUNTY SANITATION DISTRICT, a local district of the State of California ("Owner"), as obligee, in the penal sum of _____ _____ _____ Dollars ($_____) lawful money of the United States of America being at least ten percent (10%) of the aggregate amount of said Principal _____'s base Bid, for the payment of which, well and truly to be made, we bind ourselves, our successors, executors, administrators, and assigns, jointly and severally, firmly by these presents.

WHEREAS, the said Principal is submitting a Bid for Owner Contract Number 70-712-7 #7, Sonoma Valley County Sanitation District, Sewer Trunk Replacement (Agua Caliente Creek Crossing).

THE CONDITION OF THIS OBLIGATION IS SUCH that if the Bid submitted by the said Principal be accepted and the Contract be awarded to said Principal and said Principal shall within the required periods enter into the Contract so awarded and provide the required Construction Performance Bond, Construction Labor and Material Payment Bond, insurance certificates, and all other endorsements, forms, and documents required under Document 00200 (Instructions to Bidders), then this obligation shall be void, otherwise to remain in full force and effect.

IN WITNESS WHEREOF, the above bounden parties have executed this instrument this _____ day of _____, 20_____, in _____, California.

(Corporate Seal)

By

_____
Principal

_____
Surety

(Corporate Seal)

By

_____
Attorney in Fact

(Evidence of execution shall be provided by Notarial Acknowledgement of the same, in accordance with California Civil Code section 1189, as amended January 1, 2008.)

END OF DOCUMENT

DOCUMENT 00420

# BIDDER REGISTRATION FORM

INSTRUCTIONS

In order to register to undertake work for the Sonoma Valley County Sanitation District, Bidder must provide the following:

1) Fill out this registration form completely; do not leave blanks.
2) Provide certificates of insurance or a letter evidencing coverage complying with paragraph 4.2 of Document 00700 (General Conditions).

## INDEPENDENT CONTRACTOR REGISTRATION

Contractor's License # _____

Date: _____ Fed I.D. # _____

Full Corporate Name of Company: _____

Street Address: _____

_____

Mailing Address: _____

_____

Phone: _____ Fax: _____

Name of Principal Contact: _____

Type of Business: _____ Sole Proprietor _____ Partnership
_____ Non-Profit 501 C3 _____ Corporation
_____ other (please explain:_____)

## INSURANCE

**Workers' Compensation:**

Carrier: _____

Address: _____

Phone and Fax: _____

Policy Number: _____

**General Liability:**

Carrier: _____

Address: _____

Phone and Fax: _____

Policy Number: _____

Policy Limits: $ _____

A.M. Best Rating: _____

**Automobile Liability:**

Carrier: _____

Address: _____

Phone and Fax: _____

Policy Number: _____

Policy Limits: $ _____

A.M. Best Rating: _____

**Umbrella or Excess Liability (if required for General Liability and/or Auto Liability):**

Carrier: _____

Address: _____

Phone and Fax: _____

Policy Number: _____

Policy Limits: $ _____

A.M. Best Rating: _____

**Professional Liability (if applicable, as required by Document 00800 [Supplementary Conditions]):**

Carrier: _____

Address: _____

Phone and Fax: _____

Policy Number: _____

Policy Limits: $ _____

A.M. Best Rating: _____

**Environmental Impairment Liability (if applicable, as required by Document 00800 [Supplementary Conditions]):**

Carrier: _____

Address: _____

Phone and Fax: _____

Policy Number: _____

Policy Limits: $ _____

A.M. Best Rating: _____

BIDDER CERTIFIES, UNDER PENALTY OF PERJURY, THAT THE FOREGOING INFORMATION IS CURRENT AND ACCURATE AND AUTHORIZES THE SONOMA VALLEY COUNTY SANITATION DISTRICT, AND ITS AGENTS AND REPRESENTATIVES TO OBTAIN A CREDIT REPORT AND/OR VERIFY ANY OF THE ABOVE INFORMATION.

_____
Signature

_____
Date

END OF DOCUMENT

DOCUMENT 00430

**SUBCONTRACTORS LIST**

Bidder submits the following information as to the subcontractors Bidder intends to employ if awarded the Contract.

| Full Name of Subcontractor and Address of Mill or Shop | Email address of Subcontractor | Description of Work: Reference To Bid Items | Subcontractor's License No. | Subcontractor's registration number pursuant to Labor Code section 1725.5 |
|---|---|---|---|---|
| | | | | |
| | | | | |
| | | | | |
| | | | | |
| | | | | |
| | | | | |
| | | | | |

(Bidder to attach additional sheets if necessary)

END OF DOCUMENT

DOCUMENT 00450

# STATEMENT OF QUALIFICATIONS FOR CONSTRUCTION WORK

## STATEMENT OF QUALIFICATIONS CHECKLIST

This checklist is for Bidder's convenience and lists some of the completed documents Bidder shall ensure are submitted with Bidder's Statement of Qualifications.

- ☐ Letter of Assurance Regarding Performance and Payment Bonds (Document 00450, Attachment "A"). Modification of this form may result in rejection of the bid as non-responsive.
- ☐ Authorization to Contact Surety Form (Document 00450, Attachment "B")
- ☐ Statement of Qualifications Questionnaire (Document 00450, Attachment "C")
- ☐ Technical Resources identification and description
- ☐ Résumés of Key Personnel
- ☐ Cal/OSHA 300A log for 2014

(This page intentionally left blank)

## 1. REQUIRED CONTENTS OF SOQ SUBMISSION

A. Financial Capacity. Owner reserves the right to require submission of audited or reviewed financial statements for the three most recently completed fiscal years for Bidder and each member of any proposed consortium or joint venture, prior to issuance of the Notice of Award. If required, Bidder must also include audited or reviewed financial statements for the three most recently completed fiscal years for any parent company(ies) of Bidder and each member of any proposed consortium or joint venture. Bidder shall fully disclose the nature and extent of any material changes in Bidder's financial condition since the date of its most recent audited or reviewed financial statement(s).

B. Capability to Provide Required Performance and Payment Bonds.
   1. Include a completed "Letter of Assurance Regarding Performance and Payment Bonds" from Bidder's Surety in the form attached to this Document 00450 as Attachment "A";
   2. Include a completed "Authorization to Contact Surety" from Bidder in the form attached to this Document 00450 as Attachment "B."

C. Human and Physical Resources. Identify, describe, and quantify for Bidder and separately for Bidder's "designated Subcontractor(s)" (as defined in Document 00200 Instructions to Bidders), if any, the following technical resources for the Work:
   1. Description and location of manufacturing facilities, naming products and quantifying production capacity and current demand;
   2. Description of field organization(s), naming skills and equipment;
   3. Description of safety program, quality control procedures, and safety experience; and
   4. Evidence of a valid California contractor's license and required licenses of all persons who are Key Personnel of the Bidder or any designated Subcontractor.

D. Completed Questionnaire. Include a completed "Statement of Qualifications Questionnaire" in the form attached to this Document 00450 as Attachment "C." Add supplementary information if necessary.

E. Résumés of Proposed Key Personnel. Include a resume for each named Key Personnel of Bidder, and Bidder's (including but not limited to the superintendent) designated Subcontractor(s), to include the following:
   1. Name and proposed assignment of Key Personnel - do not include home addresses or phone numbers;
   2. Years of experience;
   3. Education - degrees, schools, and years obtained;
   4. Professional registration(s);
   5. Fluency in English (Yes/No);
   6. Experience directly related to above proposed assignment;
   7. At least three client references, including contact names, addresses, and telephone numbers; and
   8. Description of experience requirements as required by Document 00200 (Instructions to Bidders).

F. Litigation History. Bidder shall submit a description of all claims and litigation matters, whether pending or resolved, brought by or against Bidder in the last five (5) years, which description shall include, for each such matter, the names of involved parties, the nature of dispute, and its disposition, including the dollar amount of any judgment or settlement.

## 2. GENERAL CONDITIONS

A. General Conditions for Content. The SOQ shall be clear and concise to enable management-oriented personnel to make a thorough evaluation and arrive at a sound determination as to whether the SOQ meets Owner's requirements. To this end, the SOQ shall be so specific, detailed, and complete as to demonstrate clearly and fully that the Bidder has a thorough understanding of and has demonstrated knowledge of the requirements to perform the Work (or applicable portion thereof).

B. Explanations to SOQ. Any explanation requested by a Bidder regarding the meaning or interpretation of this Document 00450 shall be requested in writing in accordance with Document 00200 (Instructions to Bidders). Oral explanations or instructions will not be binding. Any information provided to any prospective Bidder concerning this Document 00450 will be furnished to all prospective Bidders as an Addendum to the Bidding Documents.

## 3. DEFINITIONS

A. Except as set forth herein, all abbreviations and definitions of terms used in this Document 00450 are as set forth in Document 00700 (General Conditions) or Section 01420 (References and Definitions).

LETTER OF ASSURANCE REGARDING PERFORMANCE AND PAYMENT BONDS, AUTHORIZATION TO CONTACT SURETY FORM, AND STATEMENT OF QUALIFICATION QUESTIONNAIRE ARE ON FOLLOWING PAGES

**ATTACHMENT "A" -- Letter of Assurance Regarding Performance and Payment Bonds**

To Sonoma Valley County Sanitation District:

This letter is written by _____ [insert name of surety], a surety duly licensed to do business in the State of California, having a financial rating from A. M. Best Company of A or better. The purpose of this letter is to advise the Sonoma Valley County Sanitation District that this surety has agreed to provide _____ [insert name of Bidder] with the required performance and payment bonds in accordance with the requirements set forth in Documents 00611 (Construction Performance Bond) and 00612 (Construction Labor and Material Payment Bond) for the Sonoma Valley County Sanitation District, Sewer Trunk Replacement (Agua Caliente Creek Crossing), if the Bid submitted by said Bidder is accepted and the Contract is awarded to said Bidder. These performance and payment bonds shall be in the minimum penal sums provided therein.

_____
Signature of Surety's Authorized Representative

_____
Name and Title

_____
Date

**ATTACHMENT "B" -- Authorization to Contact Surety**

The Sonoma Valley County Sanitation District is hereby authorized to verify with the Surety identified in Attachment "A" that the Surety will, based upon Bid prices, issue the required bonds under the conditions stated in Attachment "A."

_____
Signature of Bidder's Authorized Representative

_____
Name and Title

_____
Date

## ATTACHMENT "C" -- Statement of Qualifications Questionnaire

Bidders shall complete the entire Statement of Qualification Questionnaire and submit it in accordance with Document 00200 (Instructions to Bidders) and this Document 00450. Failure to complete the questionnaire or inclusion of any false statement(s) shall be grounds for immediate disqualification. Label attachments with a reference to the related document, part, and question number.

### BIDDER'S CONTACT INFORMATION

Company Name: _____

Owner of Company: _____

Contact Person: _____

Address: _____

Phone: _____ Fax: _____

### PART A: GENERAL INFORMATION

Complete Part A before proceeding to Part B.

1. Does Bidder possess a valid and current California Contractor's license for the Work proposed? Yes _____ No _____
2. Does Bidder have a minimum general liability insurance coverage as required by Document 00800 (Supplementary Conditions)? Yes _____ No _____

**Bidder will be immediately disqualified if any answer to questions 1 or 2 above is No.**

3. Has Bidder's license been suspended or revoked at any time in the last five years? Yes _____ No _____
4. Has Bidder been "default terminated" by an owner (other than for convenience), or has a Surety completed a contract for Bidder within the last five years? Yes _____ No _____
5. Labor Commissioner assessments or determination of ineligibility to bid:
   a. Has Bidder had a final civil wage and penalty assessment against it from the Labor Commissioner more than twice in the last five years? Yes _____ No _____
   b. Has Bidder been determined by the Labor Commissioner to be ineligible to bid on public contracts more than twice in the last five years? Yes _____ No _____

**Bidder will be immediately disqualified if any answer to questions 3, 4, 5.a, or 5.b above is Yes.**

## PART B: SAFETY, PREVAILING WAGE, DISPUTES, AND BONDS

### (SAFETY)

1. Do you have any Cal/OSHA Citations or Penalties: Yes_____ No_____
   If yes, please submit the following information to determine if Bidder meets the suggested safety criteria for this Project. Describe any Cal/OSHA citations and penalties that Bidder has received in the last three years. For each occurrence state whether the action by Cal/OSHA resulted in a citation, or a penalty, or both. Describe the activities that led to the action by Cal/OSHA. Provide dates, citation numbers, penalty amounts, and any other relevant information regarding the action by Cal/OSHA. Responses shall be machine written or neatly printed on company letterhead and signed by an officer of the company.

   ☐ Separate sheet attached.

2. Experience Modification Rates:
   What were Bidder's Interstate Experience Modification Rates as established by the Workers' Compensation Insurance Rating Bureau for the following three years?

   2012: _____
   2013: _____
   2014: _____

   Average of last three years: _____ (no rounding)

   If Bidder was not eligible to obtain a formal rating from the Workers' Compensation Insurance Rating Bureau for any of the years listed above, Bidder shall submit written documentation from its workers' compensation insurance company that establishes what Bidder's equivalent experience modification rate would be.

   If average of last three years is greater than 1.1, Bidder shall provide an explanation here or as a separate attachment:

   _____

   _____

   _____

3. Total Recordable Incident Rates (RIR):
   What were Bidder's Total Recordable Incident Rates (RIR) for each of the last three complete years?

   2012: _____
   2013: _____
   2014: _____

   Average of last three years: _____ (no rounding)

4. Total Lost Time Incident Rates (LTIR):
What were Bidder's Total Lost Time Incident Rates (LTIR) for each of the last three complete years?

2012: _____
2013: _____
2014: _____

Average of last three years: _____ (no rounding)

5. State the name of Bidder's safety engineer/manager or Site Safety Officer: _____
Attach a résumé or outline of this individual's safety and health qualifications and experience.

**(PREVAILING WAGE PROVISIONS)**

6. In the past five years, has Bidder been fined, penalized or otherwise found to have violated any prevailing wage or labor code provision? If yes, attach description of each occurrence.
Yes_____ No_____

**(LICENSE PROVISIONS)**

7. In the past five years, has Bidder changed names or license numbers? If so, please state reason for change and list previous name(s) and any previous license number for any of Bidder's principals.

Yes_____ No_____ Reason: _____

_____

Previous name(s) and license number(s): _____

_____

**(DISPUTES)**

8. In the past five years, has Bidder had any claims, litigation (pending or resolved), or disputes resulting in mediation or arbitration, or termination for cause associated with any project?
Yes _____ No _____
If yes, attach description of each such instance including details of total claim amount, judgment amount, or settlement amount, and the adverse party's (or parties') name(s) and phone number(s).

## (BONDING)

9. Bonding Capacity - Provide documentation from Bidder's surety identifying the following:
   Name of bonding company/surety: _____

   Name of Surety Agent: _____

   Surety Agent address: _____

   Surety Agent phone number: _____

   Is surety a California-admitted surety? Yes _____ No _____

   Is surety listed in the current edition of the California Department of the Treasury's Listing of approved sureties? Yes _____ No _____

   List surety's A.M. Best Rating: _____

   What is Bidder's total bonding capacity? _____

   What percentage rate does Bidder pay for bonds? _____

## PART C: FINANCIAL INFORMATION

1. Has Bidder ever reorganized under the protection of the bankruptcy laws?
   Yes____ No _____ If yes, please state when _____

2. If Bidder has had the general liability carrier identified in Document 00420 (Bidder Registration Form) for less than five years, please provide additional information below for balance of the past five years.
   Agency Name: _____

   Contact Name: _____

   Phone Number: _____

   Carrier: _____ Dates: _____ A.M. Best Rating: _____

   Carrier: _____ Dates: _____ A.M. Best Rating: _____

   Carrier: _____ Dates: _____ A.M. Best Rating: _____

3. Has Bidder ever had insurance terminated by a carrier? Yes _____ No _____
   If yes, explain on separate signed sheet marked with correlating cross-reference to this paragraph of the questionnaire.

4. Does Bidder have any outstanding or unsatisfied judgments? Yes _____ No _____
   If yes, attach for each such judgment an explanation of the steps Bidder has taken to ensure the judgment won't interfere with Bidder's performance of the Work.

## PART D: EXPERIENCE OF PRIME CONTRACTOR

The unique nature of this Project requires prior similar experience of the firm and the Key Personnel assigned. Summarize similar project experience below and provide the detailed project information requested:

**Years of Experience.** List years of experience as a continuously operating entity engaged in the performance of similar work (Five years required, minimum): _____

**Key Personnel.** List Key Personnel who will be assigned to the Work:

Project Manager: _____

Project Superintendent: _____

Project Scheduler: _____

Project Safety Engineer/Manager, or Site Safety Officer: _____

**Qualifying Projects**. List three construction projects of a similar nature and complexity, completed within the past five years, with a contract dollar amount of at least $800,000 each, including at a minimum, the construction of 350 linear feet of sewer pipe with appurtenant manholes and laterals. Names and references must be current and verifiable. If a separate sheet is used, it must contain all of the information shown on the following table:

### LIST OF QUALIFYING PROJECTS - PRIME CONTRACTOR

| | Project 1 | Project 2 | Project 3 |
|---|---|---|---|
| Project Name | | | |
| Location | | | |
| Client | | | |
| Client Contact (name and phone number) | | | |
| Architect/Engineer | | | |
| Architect/Engineer Contact (name and phone number) | | | |
| Construction Manager, Project Manager, or Superintendent (name and phone number) | | | |
| Description of Project, Scope of Work Performed | | | |
| Total Construction Cost | | | |

| | | | |
|---|---|---|---|
| Completion Date | | | |
| Linear feet of sewer pipe with appurtenant manholes and laterals constructed | | | |

**Recent Projects.**

Provide information about three most recently completed projects. Names and references must be current and verifiable. If a separate sheet is used, it must contain all of the following information:

| | Recent Project 1 | Recent Project 2 | Recent Project 3 |
|---|---|---|---|
| Project Name | | | |
| Location | | | |
| Client | | | |
| Client Contact (name and phone number) | | | |
| Architect/Engineer | | | |
| Architect/Engineer Contact (name and phone number) | | | |
| Construction Manager, Project Manager, or Superintendent (name and phone number) | | | |
| Description of Project, Scope of Work Performed | | | |
| Total Construction Cost | | | |
| Completion Date | | | |
| Total Change Order Amount | | | |
| Original Scheduled Date of Completion | | | |
| Time Extensions Granted (number of Days) | | | |
| Actual Date of Completion | | | |
| Number of Stop Notices filed by subcontractors or suppliers | | | |

## PART E: EXPERIENCE OF DESIGNATED SUBCONTRACTOR(S)

The unique nature of this Project requires prior similar project experience of the designated Subcontractor(s), including the Bidder to the extent Bidder performs such Work itself, and the Key Personnel assigned. Summarize similar project experience below and provide the detailed project information requested:

### Pipe Ramming Subcontractor

**Key Personnel.** List Key Personnel that will be assigned to the Work:

Project Manager: _____

Project Superintendent: _____

Project Safety Engineer/Manager, or Site Safety Officer: _____

**Qualifying Projects.** List three construction projects of a similar nature and complexity, completed within the past five years, with a contract dollar amount of at least $60,000 each for pipe ramming casing installations under creeks, and at least one of the qualifying projects must include a minimum 100 linear feet of pipe rammed casing. If a separate sheet is used, it shall contain all of the information shown on the following table:

**LIST OF QUALIFYING PROJECTS**

**DESIGNATED SUBCONTRACTOR FOR PIPE RAMMING**

| | Project 1 | Project 2 | Project 3 |
|---|---|---|---|
| Project Name | | | |
| Location | | | |
| Client | | | |
| Client Contact (name and phone number) | | | |
| Architect/Engineer | | | |
| Architect/Engineer Contact (name and phone number) | | | |
| Construction Manager, Project Manager, or Superintendent (name and phone number) | | | |
| Description of Project, Scope of Work Performed | | | |
| Total Construction Cost | | | |

| | | | |
|---|---|---|---|
| Completion Date | | | |
| Number of linear feet of pipe rammed casing [100 linear feet required on one project] | | | |

**Recent Projects.**

Provide information about three most recently completed projects. Names and references must be current and verifiable. If a separate sheet is used, it must contain all of the following information:

| | Recent Project 1 | Recent Project 2 | Recent Project 3 |
|---|---|---|---|
| Project Name | | | |
| Location | | | |
| Client | | | |
| Client Contact (name and phone number) | | | |
| Architect/Engineer | | | |
| Architect/Engineer Contact (name and phone number) | | | |
| Construction Manager, Project Manager, or Superintendent (name and phone number) | | | |
| Description of Project, Scope of Work Performed | | | |
| Total Construction Cost | | | |
| Completion Date | | | |
| Total Change Order Amount | | | |
| Original Scheduled Date of Completion | | | |
| Time Extensions Granted (number of Days) | | | |
| Actual Date of Completion | | | |
| Number of Stop Notices filed by subcontractors or suppliers | | | |

## Guided Bore and Jack Subcontractor

**Key Personnel.** List Key Personnel that will be assigned to the Work:

Project Manager: _____

Project Superintendent: _____

Project Safety Engineer/Manager, or Site Safety Officer: _____

**Qualifying Projects.** List three construction projects of a similar nature and complexity, completed within the past five years, with a contract dollar amount of at least $60,000 each for guided bore and jack casing installations, and at least one of the qualifying projects must include a minimum 100 linear feet of guided bore and jack casing. If a separate sheet is used, it shall contain all of the information shown on the following table:

**LIST OF QUALIFYING PROJECTS**

**DESIGNATED SUBCONTRACTOR FOR GUIDED BORE AND JACK**

| | Project 1 | Project 2 | Project 3 |
|---|---|---|---|
| Project Name | | | |
| Location | | | |
| Client | | | |
| Client Contact (name and phone number) | | | |
| Architect/Engineer | | | |
| Architect/Engineer Contact (name and phone number) | | | |
| Construction Manager, Project Manager, or Superintendent (name and phone number) | | | |
| Description of Project, Scope of Work Performed | | | |
| Total Construction Cost | | | |
| Completion Date | | | |
| Number of linear feet of guided bore and jack casing [100 linear feet required on one project] | | | |

**Recent Projects.**

Provide information about three most recently completed projects. Names and references must be current and verifiable. If a separate sheet is used, it must contain all of the following information:

| | Recent Project 1 | Recent Project 2 | Recent Project 3 |
|---|---|---|---|
| Project Name | | | |
| Location | | | |
| Client | | | |
| Client Contact (name and phone number) | | | |
| Architect/Engineer | | | |
| Architect/Engineer Contact (name and phone number) | | | |
| Construction Manager, Project Manager, or Superintendent (name and phone number) | | | |
| Description of Project, Scope of Work Performed | | | |
| Total Construction Cost | | | |
| Completion Date | | | |
| Total Change Order Amount | | | |
| Original Scheduled Date of Completion | | | |
| Time Extensions Granted (number of Days) | | | |
| Actual Date of Completion | | | |
| Number of Stop Notices filed by subcontractors or suppliers | | | |

**Well Driller Subcontractor**

**Qualifying Projects.** List five well destructions of a similar nature and complexity, completed within the past five years, and at least two shall be potable water well destructions and at least two shall be groundwater monitoring well destructions. References must be current and verifiable. Provide all of the information shown on the following table:

| Project No. | Type of Well Destruction | Owner's Contact Information (Address and Phone) | Permit Number | Date Completed |
|---|---|---|---|---|
| 1. | | | | |
| 2. | | | | |
| 3. | | | | |
| 4. | | | | |
| 5. | | | | |

Bidder certifies, under penalty of perjury, that the foregoing information is current and accurate and authorizes the Sonoma Valley County Sanitation District, and its agents and representatives to obtain a credit report and/or verify any of the above information.

_____
Signature

_____
Title

END OF DOCUMENT

DOCUMENT 00481

**NONCOLLUSION DECLARATION**
PUBLIC CONTRACT CODE §7106

NONCOLLUSION DECLARATION TO BE EXECUTED BY BIDDER AND SUBMITTED WITH BID
The undersigned declares:

I am the _____ of _____, the party making the foregoing bid.
[Office of Declarant] [Name of Bidder]

The bid is not made in the interest of, or on behalf of, any undisclosed person, partnership, company, association, organization, or corporation. The bid is genuine and not collusive or sham. The bidder has not directly or indirectly induced or solicited any other bidder to put in a false or sham bid, and has not directly or indirectly colluded, conspired, connived or agreed with any bidder or anyone else to put in a sham bid, or to refrain from bidding. The bidder has not in any manner, directly or indirectly, sought by agreement, communication or conference with anyone to fix the bid price of the bidder or any other bidder, or to fix any overhead, profit or cost element of the bid price, or of that of any other bidder. All statements contained in the bid are true. The bidder has not, directly or indirectly, submitted his or her bid price or any breakdown thereof, or the contents thereof, or divulged information or data relative thereto, to any corporation, partnership, company, association, organization, bid depository, or to any member or agent thereof, to effectuate a collusive or sham bid, and has not paid, and will not pay, any person or entity for such purpose.

Any person executing this declaration on behalf of a bidder that is a corporation, partnership, joint venture, limited liability company, limited liability partnership, or any other entity, hereby represents that he or she has full power to execute, and does execute, this declaration on behalf of the bidder.

I declare under penalty of perjury under the laws of the State of California that the foregoing is true and correct and that this declaration is executed on _____ [date], at _____ [city], _____ [state].

_____
Signature of Principal

END OF DOCUMENT

# CONTRACTING REQUIREMENTS

DOCUMENT 00505

**NOTICE OF INTENT TO AWARD FOR CONSTRUCTION**

DATE POSTED: _____

CONTRACT NUMBER: 70-712-7 #7

PROJECT TITLE: SONOMA VALLEY COUNTY SANITATION DISTRICT, SEWER TRUNK REPLACEMENT (AGUA CALIENTE CREEK CROSSING)

Grant Davis, the General Manager of the Sonoma County Water Agency, intends to recommend to the Board of Directors of the Sonoma Valley County Sanitation District the award of the above-referenced Project to _____.
(Name of Contractor)

Grant Davis
General Manager

By: _____

_____
(Print name)

Title: _____

Date: _____

END OF DOCUMENT

DOCUMENT 00510

**NOTICE OF AWARD**

Dated _____

TO: _____

ADDRESS: _____

CONTRACT NO.: 70-712-7 #7

CONTRACT FOR:

**Sonoma Valley County Sanitation District, Sewer Trunk Replacement**

**(Agua Caliente Creek Crossing)**

The Contract Sum of your contract is _____ _____ Dollars ($_____).

1. Several copies of the proposed Contract Documents listed below accompany this Notice of Award.

2. You must comply with the following conditions precedent by 5:00 p.m. of the 20th Day following the date of this Notice of Award, that is, by _____, _____ [month day, year].

   a. Deliver to Owner four fully executed counterparts of Document 00520 (Agreement). Each copy of Document 00520 (Agreement) must bear your original signature on the signature page and your initials on each page.
   b. Deliver to Owner four originals of Document 00611 (Construction Performance Bond), executed by you and your surety.
   c. Deliver to Owner four originals of Document 00612 (Construction Labor and Material Payment Bond), executed by you and your surety.
   d. Deliver to Owner original set of the insurance certificates with endorsements required under Document 00700 (General Conditions).
   e. Deliver to Owner four original copies of Document 00630 (Guaranty), each executed by you.
   f. Deliver to Owner one complete set of the documentary evidence received or generated by you in preparation of Bid prices for this Contract, as set forth in Document 00670 (Escrow Bid Documents).

3. Failure to comply with these conditions within the time specified will entitle Owner to consider your Bid abandoned, to annul this Notice of Award, and to declare your Bid security forfeited.

4. Within 21 Days after you comply with the conditions in paragraph 2 of this Document 00510, Owner will return to you one fully signed counterpart of Document 00520 (Agreement) with ten

copies of the Project Manual (including Specifications and Drawings) and five sets of full-size Drawings.

5. Attend a Post-Notice of Award Meeting at Owner's office. This meeting will be scheduled for approximately one week after this Notice of Award is issued.

6. Contractor is encouraged to submit key Submittals upon execution of Contract Documents by Owner.

7. Upon commencement of Work, you and each of your Subcontractors shall certify and provide to Owner copies of payroll records on forms provided by the Division of Labor Standards Enforcement, in accordance with Section 1776 of the California Labor Code.

SONOMA VALLEY COUNTY SANITATION DISTRICT
A Local District of the State of California ("Owner")

BY: _____
Grant Davis, General Manager

END OF DOCUMENT

DOCUMENT 00520

# AGREEMENT

Order#: 7544

THIS AGREEMENT, dated this ___ day of _____, 20__ , by and between _____ [Name of Contractor] whose place of business is located at _____ [Address of Contractor] ("Contractor"), and the SONOMA VALLEY COUNTY SANITATION DISTRICT ("Owner"), a local district of the State of California acting under and by virtue of the authority vested in the Owner by the laws of the State of California.

WHEREAS, Owner, by its Board Action on the _____ day of _____ awarded to Contractor the following Contract:

**CONTRACT NUMBER 70-712-7 #7**
**SONOMA VALLEY COUNTY SANITATION DISTRICT**
**SEWER TRUNK REPLACEMENT (AGUA CALIENTE CREEK CROSSING)**

NOW, THEREFORE, in consideration of the mutual covenants hereinafter set forth, Contractor and Owner agree as follows:

## Article 1. Work

1.1 Contractor shall complete all Work specified in the Contract Documents, in accordance with the Specifications, Drawings, and all other terms and conditions of the Contract Documents.

## Article 2. Agency and Notices to Owner

2.1 The Sonoma County Water Agency, a public agency of the State of California ("Agency"), has been designated the Owner's agent for all purposes of the Contract Documents. All Contractor agreements and other obligations (including without limitation releases, representations, covenants, indemnities and obligations to provide insurance) arising from or relating to the Contract Documents in favor of the Owner shall also be in favor of the Agency, and Agency will be an express third-party beneficiary of all Contractor agreements and other obligations. All Owner rights under the Contract Documents may be exercised by Agency, either in its own name or the Owner's name. Contractor hereby expressly consents to the foregoing.

2.2 Owner has designated Dennis Daly, Construction Management Section Manager, to act as Owner's Representative(s), who will represent Owner in performing Owner's duties and responsibilities and exercising Owner's rights and authorities in Contract Documents. Owner may change the individual(s) acting as Owner's Representative(s), or delegate one or more specific functions to one or more specific Owner's Representatives, including without limitation engineering, architectural, inspection and general administrative functions, at any time with notice and without liability to Contractor. Each Owner's Representative is the beneficiary of all Contractor obligations to Owner, including without limitation, all releases and indemnities.

2.3 Consultant: Brunsing Associates, Inc., 5468 Skylane Boulevard, Suite 201, Santa Rosa, CA 95403. Consulting Engineer's duties will include only geotechnical construction services related to trench excavation and backfilling activities and subgrade preparation for permeable pavers. Consultant has no authority to act on behalf of Owner, to stop Work, to interpret conditions of the Contract, or to give direction to Contractor.

2.4 Consultant: Federated Indians of the Graton Rancheria, Tribal Administrator, 6400 Redwood Drive, Suite 300, Rohnert Park, CA 94928. Consultant's duties will include only archaeological observation for Native American cultural resources during trench excavation activities along Old Maple Avenue, within Sonoma County Regional Parks easement, and within Finnish American Home Association (FAHA) easement. Consultant has no authority to act on behalf of Owner, to stop Work, to interpret conditions of the Contract, or to give direction to Contractor.

2.5 All notices or demands to Owner under the Contract Documents shall be to Owner's Representative at:

Hard copies: 404 Aviation Blvd., Santa Rosa, California 95403-9019
Electronic: address to be provided to Contractor by Owner with Notice to Proceed

or to such other person(s) and address(es) as Owner shall provide to Contractor.

## Article 3. Contract Time and Liquidated Damages

3.1 Contract Time.

Contractor shall commence Work on the date established in the Notice to Proceed. Owner reserves the right to modify or alter the Commencement Date of the Work.

Contractor shall achieve Substantial Completion of the entire Work within 181 Days from the date when the Contract Time commences to run as provided in Document 00700 (General Conditions). Contractor shall achieve Final Completion of the entire Work and be ready for Final Payment in accordance with Section 01770 (Contract Closeout) 211 Days from the date when the Contract Time commences to run as provided in Document 00700 (General Conditions).

3.2 Liquidated Damages.

Owner and Contractor recognize that time is of the essence of this Agreement and that Owner will suffer financial loss in the form of Contract administration expenses (such as Project management and consultant expenses), if all or any part of the Work is not completed within the times specified above, plus any extensions thereof allowed in accordance with the Contract Documents. Consistent with Article 15 of Document 00700 (General Conditions), Contractor and Owner agree that because of the nature of the Project, it would be impractical or extremely difficult to fix the amount of actual damages incurred by Owner because of a delay in completion of all or any part of the Work. Accordingly, Owner and Contractor agree that as liquidated damages for delay Contractor shall pay Owner:

3.2.1 Two thousand two hundred dollars ($2,200.00) for each Day that expires after the time specified herein for Contractor to achieve Substantial Completion of the entire Work, until achieved.

3.2.2 Eight hundred dollars ($800.00) for each Day that expires after the time specified herein for Contractor to achieve Final Completion of the entire Work, until achieved.

These measures of liquidated damages shall apply cumulatively and except as provided below, shall be presumed to be the damages suffered by Owner resulting from delay in completion of the Work.

Liquidated damages for delay shall only cover administrative, overhead, interest on bonds, and general loss of public use damages suffered by Owner as a result of delay. Liquidated damages shall not cover the cost of completion of the Work, or other damages, including but not limited to damages resulting from Defective Work, lost revenues or costs of substitute facilities, penalties and other costs associated with violation of legal requirements or damages suffered by others who then seek to recover their damages from Owner (for example, delay claims of other contractors, subcontractors, tenants, or other third-parties), and defense costs thereof.

## Article 4. Contract Sum

4.1 Owner shall pay Contractor the Contract Sum for completion of Work in accordance with Contract Documents as follows:

| ITEM | DESCRIPTION | ESTIMATED QUANTITY | UNIT | UNIT PRICE | TOTAL |
|---|---|---|---|---|---|
| **1.** | Bonds | XXXXXX | Lump Sum | XXXXX | $ |
| **2.** | Insurance | XXXXXX | Lump Sum | XXXXX | $ |
| **3.** | Safety Program and Implementation | XXXXXX | Lump Sum | XXXXX | $ |
| **4.** | Construction Material Waste Management Plan and Implementation | XXXXXX | Lump Sum | XXXXX | $ |
| **5.** | Storm Water Pollution Prevention Plan and Implementation | XXXXXX | Lump Sum | XXXXX | $ |
| **6.** | Mobilization/ Demobilization | XXXXXX | Lump Sum | XXXXX | $ |
| **7.** | Sheet Piling, Shoring, and Bracing | XXXXXX | Lump Sum | XXXXX | $ |
| **8.** | Traffic Control Plan and Implementation | XXXXXX | Lump Sum | XXXXX | $ |
| **9.** | Project Identification Signs | 2 | EA | $ | $ |

| ITEM | DESCRIPTION | ESTIMATED QUANTITY | UNIT | UNIT PRICE | TOTAL |
|---|---|---|---|---|---|
| **10.** | Guided Bore Plan Preparation | XXXXXX | Lump Sum | XXXXX | $ |
| **11.** | Pipe Ramming Plan Preparation | XXXXXX | Lump Sum | XXXXX | $ |
| **12.** | Dewatering Plan Preparation | XXXXXX | Lump Sum | XXXXX | $ |
| **13.** | Site Clearing | XXXXXX | Lump Sum | XXXXX | $ |
| **14.** | Relocate Existing Utilities | XXXXXX | Lump Sum | XXXXX | $ |
| **15.** | Dewatering Plan Implementation | XXXXXX | Lump Sum | XXXXX | $ |
| **16.** | Sewer Diversion and Bypass Pumping | XXXXXX | Lump Sum | XXXXX | $ |
| **17.** | 1-inch Water Service for 154 Fairview Lane | XXXXXX | Lump Sum | XXXXX | $ |
| **18.** | 1-inch Water Service for 157 Fairview Lane | XXXXXX | Lump Sum | XXXXX | $ |
| **19.** | Abandon Existing 4-inch Side Sewer and Provide New 6-Inch PVC Side Sewer | XXXXXX | Lump Sum | XXXXX | $ |
| **20.** | Remove Existing and Provide New 4-inch Lateral Sewer | XXXXXX | Lump Sum | XXXXX | $ |
| **21.** | 6-inch Diameter PVC Sewer Main | 10 | LF | $ | $ |
| **22.** | 8-inch Diameter PVC Sewer Main | 30 | LF | $ | $ |
| **23.** | 12-inch OD Fused SDR 17 HDPE Siphon Pipe (Open Trenched) | 106 | LF | $ | $ |
| **24.** | 12-inch OD Fused SDR 17 HDPE Siphon Pipe (Jacked through Casing) | 133 | LF | $ | $ |
| **25.** | 24-inch OD Fused SDR 17 HDPE Siphon Pipe (Open Trenched) | 106 | LF | $ | $ |

| ITEM | DESCRIPTION | ESTIMATED QUANTITY | UNIT | UNIT PRICE | TOTAL |
|---|---|---|---|---|---|
| **26.** | 24-inch OD Fused SDR 17 HDPE Siphon Pipe (Jacked through Casing) | 133 | LF | $ | $ |
| **27.** | 30-inch OD Fused SDR 41 HDPE Siphon Pipe (Open Trenched) | 166 | LF | $ | $ |
| **28.** | 30-inch OD Fused SDR 41 HDPE Siphon Pipe (Jacked through Casing) | 334 | LF | $ | $ |
| **29.** | Pipe Ramming 24-inch OD Steel Casing | 133 | LF | $ | $ |
| **30.** | Pipe Ramming 36-inch OD Steel Casing | 133 | LF | $ | $ |
| **31.** | Guided Bore Method 36-inch OD Steel Cylinder Encasement | 327 | LF | $ | $ |
| **32.** | 48-inch Diameter Manhole | 2 | EA | $ | $ |
| **33.** | 60-inch Diameter Manhole | 5 | EA | $ | $ |
| **34.** | 60-inch Diameter Drop Manhole | 1 | EA | $ | $ |
| **35.** | 72-inch Diameter Drop Manhole | 1 | EA | $ | $ |
| **36.** | 96-inch Diameter Manhole | 1 | EA | $ | $ |
| **37.** | Connect to, and Modify, Existing 60-inch Diameter Manhole | 1 | EA | $ | $ |
| **38.** | Abandon Existing 60-inch Diameter Manhole | 4 | EA | $ | $ |
| **39.** | Abandon or Remove Existing 21-inch, 8-inch, and 6-inch Diameter Sewer Mains | XXXXXX | Lump Sum | XXXXX | $ |
| **40.** | Remove Existing 22-inch OD Steel Trunk Sewer Main Spanning Agua Caliente Creek | XXXXXX | Lump Sum | XXXXX | $ |

| ITEM | DESCRIPTION | ESTIMATED QUANTITY | UNIT | UNIT PRICE | TOTAL |
|---|---|---|---|---|---|
| **41.** | Precast Reinforced Siphon Structure "A" | XXXXXX | Lump Sum | XXXXX | $ |
| **42.** | Precast Reinforced Siphon Structure "B" | XXXXXX | Lump Sum | XXXXX | $ |
| **43.** | Pipe Ramming Pits Excavation and Preparation | XXXXXX | Lump Sum | XXXXX | $ |
| **44.** | Over-Excavation Below Design Trench Subgrade in Vicinity of Siphon Structure "B" | 294 | CY | $ | $ |
| **45.** | CDF Buttress Fill | 600 | CY | $ | $ |
| **46.** | Guided Bore Method Bore and Jack Pits Excavation | XXXXXX | Lump Sum | XXXXX | $ |
| **47.** | Siphon Structure "A" and "B" Pits Excavation | XXXXXX | Lump Sum | XXXXX | $ |
| **48.** | Abandon or Remove, and Lower Existing Piezometer Wells | 2 | EA | $ | $ |
| **49.** | Abandon Well at 157 Fairview Lane | XXXXXX | Lump Sum | XXXXX | $ |
| **50.** | Relocate Wood Frame Structure at 157 Fairview Lane | XXXXXX | Lump Sum | XXXXX | $ |
| **51.** | All-Weather Aggregate Base Access Roadway and Appurtenances | 125 | SY | $ | $ |
| **52.** | Siphon Structure "B" Permeable Paver Access Roadway | 380 | SY | $ | $ |
| **53.** | Siphon Structure "A" Access Pad Surface Improvements | XXXXXX | Lump Sum | XXXXX | $ |
| **54.** | Old Maple Avenue Roadway Resurfacing, and Concrete Curb and Gutter | XXXXXX | Lump Sum | XXXXX | $ |

| ITEM | DESCRIPTION | ESTIMATED QUANTITY | UNIT | UNIT PRICE | TOTAL |
|---|---|---|---|---|---|
| **55.** | Type "A" Roadway Asphalt Concrete Resurfacing on Fairview Lane | 581 | SY | $ | $ |
| **56.** | Type "B" Roadway Asphalt Concrete Resurfacing on Fairview Lane | 1,062 | SY | $ | $ |
| **57.** | Transitional Roadway Resurfacing on Fairview Lane between Types "A" and "B" | 166 | SY | $ | $ |
| **58.** | Type "A" Roadway Asphalt Concrete Resurfacing on Old Maple Avenue | 1,320 | SY | $ | $ |
| **59.** | Revegetation | XXXXXX | Lump Sum | XXXXX | $ |
| **60.** | All Other Work | XXXXXX | Lump Sum | XXXXX | $ |
| | | | | **TOTAL BID PRICE** | $ |
| **61.** | Contingency Reserve | XXXXXX | XXXXXX | XXXXX | $50,000.00 |
| | | | | **TOTAL** | $ |

**Article 5. Contractor's Representations**

In order to induce Owner to enter into this Agreement, Contractor makes the following representations and warranties:

5.1 Contractor has visited the Site and has examined thoroughly and understood the nature and extent of the Contract Documents, Work, Site, locality, actual conditions, as-built conditions, and all local conditions, and federal, state and local laws and regulations that in any manner may affect cost, progress, performance or furnishing of Work or which relate to any aspect of the means, methods, techniques, sequences or procedures of construction to be employed by Contractor and safety precautions and programs incident thereto.

5.2 Contractor has examined thoroughly and understood all reports of exploration and tests of subsurface conditions, as-built drawings, drawings, products specifications or reports, available for Bidding purposes, of physical conditions, including Underground Facilities, which are identified in Document 00320 (Geotechnical Data and Existing Conditions) and Document 00335 (Hazardous Materials Documentation), or which may appear in the Drawings. Contractor accepts the determination set forth in these Documents and Document 00700 (General Conditions) of the limited extent of the information contained in such materials upon

which Contractor may be entitled to rely. Contractor agrees that except for the information so identified, Contractor does not and shall not rely on any other information contained in such reports and drawings.

5.3 Contractor has conducted or obtained and has understood all such examinations, investigations, explorations, tests, reports and studies (in addition to or to supplement those referred to in Section 5.2 of this Document 00520) that pertain to the subsurface conditions, as-built conditions, Underground Facilities and all other physical conditions at or contiguous to the Site or otherwise that may affect the cost, progress, performance or furnishing of Work, as Contractor considers necessary for the performance or furnishing of Work at the Contract Sum, within the Contract Time and in accordance with the other terms and conditions of the Contract Documents, including specifically the provisions of Document 00700 (General Conditions); and no additional examinations, investigations, explorations, tests, reports, studies or similar information or data are or will be required by Contractor for such purposes.

5.4 Contractor has correlated its knowledge and the results of all such observations, examinations, investigations, explorations, tests, reports and studies with the terms and conditions of the Contract Documents.

5.5 Contractor has given Owner prompt written notice of all conflicts, errors, ambiguities, or discrepancies that it has discovered in or among the Contract Documents and as-built drawings and actual conditions and the written resolution thereof through Addenda issued by Owner is acceptable to Contractor.

5.6 Contractor is duly organized, existing and in good standing under applicable state law, and is duly qualified to conduct business in the State of California.

5.7 Contractor has duly authorized the execution, delivery and performance of this Agreement, the other Contract Documents and the Work to be performed herein. The Contract Documents do not violate or create a default under any instrument, agreement, order or decree binding on Contractor.

5.8 Contractor has listed the following Subcontractors pursuant to the Subcontractor Listing Law, California Public Contract Code §4100 *et seq*.:

| Name of Subcontractor and Location of Mill or Shop | Description of Work: Reference To Bid Items | Subcontractor's License No. |
|---|---|---|
| | | |
| | | |

5.9 Contractor has designated _____ [name], _____, [title] to act as Contractor's Representative(s), who will represent Contractor in performing Contractor's duties and responsibilities and exercising Contractor's rights and authorities in Contract Documents. Contractor may change the individual(s) acting as Contractor's Representative(s), or delegate

one or more specific functions to one or more specific Contractor's Representatives, at any time with written notice and without liability to Owner, but Contractor is limited to two representatives.

## Article 6. Contract Documents

6.1 Contract Documents consist of the following documents, including all changes, Addenda, and Modifications thereto:

| | |
|---|---|
| Document 00510 | Notice of Award |
| Document 00520 | Agreement |
| Document 00550 | Notice to Proceed |
| Document 00611 | Construction Performance Bond |
| Document 00612 | Construction Labor and Material Payment Bond |
| Document 00630 | Guaranty |
| Document 00650 | Agreement and Release of Any and All Claims |
| Document 00660 | Substitution Request Form |
| Document 00670 | Escrow Bid Documents |
| Document 00680 | Escrow Agreement for Security Deposit in Lieu of Retention |
| Document 00700 | General Conditions |
| Document 00800 | Supplementary Conditions |
| Document 00805 | Supplementary Conditions – Hazardous Materials |
| Document 00910 | Addenda |
| Specifications | Divisions 1 through 16 |
| Drawings listed in Drawing No. G-1 | |

6.2 There are no Contract Documents other than those listed in this Document 00520, Article 6. Document 00320 (Geotechnical Data and Existing Conditions) and Document 00335 (Hazardous Materials Documentation), and the information supplied through these documents, are not Contract Documents. The Contract Documents may only be amended, modified or supplemented as provided in Document 00700 (General Conditions).

## Article 7. Miscellaneous

7.1 Terms and abbreviations used in this Agreement are defined in Document 00700 (General Conditions) and Section 01420 (References and Definitions) and will have the meaning indicated therein.

7.2 It is understood and agreed that in no instance are the persons signing this Agreement for or on behalf of Owner or acting as an employee, agent, or representative of Owner, liable on this Agreement or any of the Contract Documents, or upon any warranty of authority, or otherwise, and it is further understood and agreed that liability of the Owner is limited and confined to such liability as authorized or imposed by the Contract Documents or applicable law.

7.3 Contractor shall not assign any portion of the Contract Documents, and may subcontract portions of the Contract Documents only in compliance with the Subcontractor Listing Law, California Public Contract Code §4100 *et seq*. This Contract shall not be assigned or transferred

without approval of Owner's Board of Directors. Any such assignment or transfer without approval of Owner's Board of Directors shall be void and of no force and effect.

7.4 The Contract Sum includes all allowances (if any).

7.5 In entering into a public works contract or a subcontract to supply goods, services or materials pursuant to a public works contract, Contractor or Subcontractor offers and agrees to assign to the awarding body all rights, title and interest in and to all causes of action it may have under Section 4 of the Clayton Act (15 U.S.C. §15) or under the Cartwright Act (Chapter 2 (commencing with Section 16700) of Part 2 of Division 7 of the Business and Professions Code), arising from purchases of goods, services or materials pursuant to the public works contract or the subcontract. This assignment shall be made and become effective at the time Owner tenders final payment to Contractor, without further acknowledgment by the parties.

7.6 Copies of the general prevailing rates of per diem wages for each craft, classification, or type of worker needed to execute the Contract, as determined by Director of the State of California Department of Industrial Relations, are deemed included in the Contract Documents and on file at Owner's Office, and shall be made available to any interested party on request. Pursuant to Section 1861 of the Labor Code, Contractor represents that it is aware of the provisions of Section 3700 of the Labor Code which require every employer to be insured against liability for workers' compensation or to undertake self-insurance in accordance with the provisions of that Code, and Contractor shall comply with such provisions before commencing the performance of the Work of the Contract Documents.

7.7 Should any part, term or provision of this Agreement or any of the Contract Documents, or any document required herein or therein to be executed or delivered, be declared invalid, void or unenforceable, all remaining parts, terms and provisions shall remain in full force and effect and shall in no way be invalidated, impaired or affected thereby. If the provisions of any law causing such invalidity, illegality or unenforceability may be waived, they are hereby waived to the end that this Agreement and the Contract Documents may be deemed valid and binding agreements, enforceable in accordance with their terms to the greatest extent permitted by applicable law. In the event any provision not otherwise included in the Contract Documents is required to be included by any applicable law, that provision is deemed included herein by this reference (or, if such provision is required to be included in any particular portion of the Contract Documents, that provision is deemed included in that portion).

7.8 This Agreement and the Contract Documents shall be deemed to have been entered into in the County of Sonoma, State of California, and governed in all respects by California law (excluding choice of law rules). The exclusive venue for all disputes or litigation hereunder shall be in Sonoma County.

7.9 Contractor accepts the claims procedure established by Article 12 of Document 00700 (General Conditions), as established under Section 930.2 et seq. of the California Government Code.

/
/
/
/
/

IN WITNESS WHEREOF the parties have executed this Agreement in quadruplicate the day and year first above written.

Reviewed as to substance by Owner:

_____
Grant Davis, Water Agency's General Manager

Reviewed as to funds by Owner:

_____
Division Manager - Administrative Services

Reviewed as to form by County Counsel:

_____
County Counsel

Certificates of Insurance and Guaranty are on file with and reviewed as to substance for Owner by:

_____
Contract Administration/Inspection Date

Attest:

_____
Clerk of the Board of Directors

**CONTRACTOR:**

_____
[Contractor's name]

By: _____
[Signature]

_____
[Please print name here]

Title: _____
[If Corporation: Chairman, President, or Vice President]

By: _____
[Signature]

_____
[Please print name here]

Title: _____
[If Corporation: Secretary, Assistant Secretary, Chief Financial Officer, or Assistant Treasurer]

**OWNER:**

SONOMA VALLEY COUNTY SANITATION DISTRICT, A Local District of the State of California

By: _____
Chair, Board of Directors

END OF DOCUMENT

DOCUMENT 00550

**NOTICE TO PROCEED**

Dated: _____, 20__

To: _____

_____
(Contractor)

Address: _____

_____

**CONTRACT FOR: CONTRACT NUMBER 70-712-7 #7**
**SONOMA VALLEY COUNTY SANITATION DISTRICT, SEWER TRUNK REPLACEMENT**
**(AGUA CALIENTE CREEK CROSSING)**

You are notified that the Contract Time under the above Contract will commence to run on _____ 20___. On that date, you are to start performing your obligations with respect to Work under the Contract Documents. In accordance with Article 3 of Document 00520 (Agreement), the dates of Substantial Completion and Final Completion for the entire Work are _____, 20___ and _____, 20___, respectively.

In accordance with Article 11 of Document 00700 (General Conditions), on _____ [date] you must submit preliminary schedules (Initial Schedule, Schedule of Submittals, and Schedule of Values).

In accordance with Section 01315 (Project Meetings), on _____ [date] you must attend a Schedule Review Meeting.

**Before you may start any Work at the Site, you must:**

From this date forward, submit one electronic copy and at least one hard copy of all Project documents, unless otherwise required by the Contract Documents. Submit electronic copies to: [email address].

Upon commencement of the Work, you and each of your Subcontractors shall certify and provide Owner copies of payroll records on forms provided by the Division of Labor Standards Enforcement, in accordance with Section 1776 of the California Labor Code.

SONOMA VALLEY COUNTY SANITATION DISTRICT,
A Local District of the State of California

By : _____

Its: _____

[Notice to be sent in manner required by Contract Documents]

END OF DOCUMENT

DOCUMENT 00611

**CONSTRUCTION PERFORMANCE BOND**
STANDARD EDITION

THIS CONSTRUCTION PERFORMANCE BOND ("Bond") dated _____, is in the penal sum of _____
_____
[which is one hundred percent of the Contract Sum], and is entered into by and between the parties listed below to ensure the faithful performance of the Construction Contract listed below. This Bond consists of this page and the Bond Terms and Conditions, paragraphs 1 through 12, attached to this page. Any singular reference to _____ [insert name of Contractor] ("Contractor"), _____ [insert name of Surety] ("Surety"), Sonoma Valley County Sanitation District, a local district of the State of California ("Owner") or other party shall be considered plural where applicable.

| CONTRACTOR: | SURETY: |
|---|---|
| _____ | _____ |
| Name | Name |
| _____ | _____ |
| Address | Principal Place of Business |
| _____ | _____ |
| City/State/Zip | City/State/Zip |

CONSTRUCTION CONTRACT:

**SONOMA VALLEY COUNTY SANITATION DISTRICT, SEWER TRUNK REPLACEMENT (AGUA CALIENTE CREEK CROSSING)**
CONTRACT NUMBER 70-712-7 #7

at Sonoma County, California

Signed_____, 20____ in the Amount of $_____ (the "Penal Sum")

| CONTRACTOR AS PRINCIPAL | SURETY |
|---|---|
| Company: (Corp. Seal) | Company: (Corp. Seal) |
| Signature:_____ | Signature: _____ |
| Name and Title:_____ | Name and Title:_____ |
| _____ | _____ |

## BOND TERMS AND CONDITIONS

1. Contractor and Surety, jointly and severally, bind themselves, their heirs, executors, administrators, successors and assigns to Owner for the complete and proper performance of the Construction Contract, which is incorporated herein by reference.

2. If Contractor completely and properly performs all of its obligations under the Construction Contract, Surety and Contractor shall have no obligation under this Bond.

3. If there is no Owner Default, Surety's obligation under this Bond shall arise after:

   3.1 Owner has declared a Contractor Default under the Construction Contract pursuant to the terms of the Construction Contract; and

   3.2 Owner has agreed to pay the Balance of the Contract Sum:

      3.2.1 To Surety in accordance with the terms of this Bond and the Construction Contract; or

      3.2.2 To a contractor selected to perform the Construction Contract in accordance with the terms of this Bond and the Construction Contract.

4. When Owner has satisfied the conditions of paragraph 3, Surety shall promptly (within 30 Days) and at Surety's expense elect to take one of the following actions:

   4.1 Arrange for Contractor, with consent of Owner, to perform and complete the Construction Contract (but Owner may withhold consent, in which case the Surety must elect an option described in paragraphs 4.2, 4.3 or 4.4, below); or

   4.2 Undertake to perform and complete the Construction Contract itself, through its agents or through independent contractors; provided, that Surety may not select Contractor as its agent or independent contractor without Owner's consent; or

   4.3 Undertake to perform and complete the Construction Contract by obtaining bids from qualified contractors acceptable to Owner for a contract for performance and completion of the Construction Contract and, upon determination by Owner of the lowest responsive and responsible Bidder, arrange for a contract to be prepared for execution by Owner and the contractor selected with Owner's concurrence, to be secured with performance and payment bonds executed by a qualified surety equivalent to the bonds issued on the Construction Contract; and, if Surety's obligations defined in paragraph 6, below, exceed the Balance of the Contract Sum, then Surety shall pay to Owner the amount of such excess; or

   4.4 Waive its right to perform and complete, arrange for completion, or obtain a new contractor and with reasonable promptness under the circumstances and, after investigation and consultation with Owner, determine in good faith its monetary obligation to Owner under paragraph 6, below, for the performance and completion of the Construction Contract and, as soon as practicable after the amount is determined,

tender payment therefor to Owner with full explanation of the payment's calculation. If Owner accepts Surety's tender under this paragraph 4.4, Owner may still hold Surety liable for future damages then unknown or unliquidated resulting from the Contractor Default. If Owner disputes the amount of Surety's tender under this paragraph 4.4, Owner may exercise all remedies available to it at law to enforce Surety's liability under paragraph 6, below.

5. If Surety does not proceed as provided in paragraph 4, above, then Surety shall be deemed to be in default on this Bond ten Days after receipt of an additional written notice from Owner to Surety demanding that Surety perform its obligations under this Bond. At all times Owner shall be entitled to enforce any remedy available to Owner at law or under the Construction Contract including, without limitation, and by way of example only, rights to perform work, protect Work, mitigate damages, advance critical Work to mitigate schedule delay, or coordinate Work with other consultants or contractors.

6. Surety's monetary obligation under this Bond is limited by the amount of this Bond identified herein as the Penal Sum. This monetary obligation shall augment the Balance of the Contract Sum. Subject to these limits, Surety's obligations under this Bond are commensurate with the obligations of Contractor under the Construction Contract. Surety's obligations shall include, but are not limited to:

   6.1 The responsibilities of Contractor under the Construction Contract for completion of the Construction Contract and correction of Defective Work;

   6.2 The responsibilities of Contractor under the Construction Contract to pay liquidated damages, and for damages for which no liquidated damages are specified in the Construction Contract, actual damages caused by non-performance of the Construction Contract including, but not limited to, all valid and proper backcharges, offsets, payments, indemnities, or other damages;

   6.3 Additional legal, design professional and delay costs resulting from Contractor Default or resulting from the actions or failure to act of the Surety under paragraph 4, above (but excluding attorney's fees incurred to enforce this Bond).

7. No right of action shall accrue on this Bond to any person or entity other than Owner or its successors or assigns.

8. Surety hereby waives notice of any change, alteration or addition to the Construction Contract or to related subcontracts, purchase orders and other obligations, including changes of time. Surety consents to all terms of the Construction Contract, including provisions on changes to the Contract. No extension of time, change, alteration, Modification, deletion, or addition to the Contract Documents, or of the Work required thereunder, shall release or exonerate Surety on this Bond or in any way affect the obligations of Surety on this Bond.

9. Any proceeding, legal or equitable, under this Bond shall be instituted in any court of competent jurisdiction where a proceeding is pending between Owner and Contractor regarding the Construction Contract, or in the courts of the County of Sonoma, or in a court of competent jurisdiction in the location in which the Work is located. Communications from

Owner to Surety under paragraph 3.1 of this Bond shall be deemed to include the necessary agreements under paragraph 3.2 of this Bond unless expressly stated otherwise.

10. All notices to Surety or Contractor shall be mailed or delivered (at the address set forth on the signature page of this Bond), and all notices to Owner shall be mailed or delivered as provided in Document 00520 (Agreement). Actual receipt of notice by Surety, Owner or Contractor, however accomplished, shall be sufficient compliance as of the date received at the foregoing addresses.

11. Any provision in this Bond conflicting with any statutory or regulatory requirement shall be deemed deleted herefrom and provisions conforming to such statutory requirement shall be deemed incorporated herein.

12. Definitions.

    12.1 Balance of the Contract Sum: The total amount payable by Owner to Contractor pursuant to the terms of the Construction Contract after all proper adjustments have been made under the Construction Contract, for example, deductions for progress payments made, and increases/decreases for approved Modifications to the Construction Contract.

    12.2 Construction Contract: The agreement between Owner and Contractor identified on the signature page of this Bond, including all Contract Documents and changes thereto.

    12.3 Contractor Default: Material failure of Contractor, which has neither been remedied nor waived, to perform or otherwise to comply with the terms of the Construction Contract including, but not limited to, "default" or any other condition allowing a termination for cause as provided in Document 00700 (General Conditions).

    12.4 Owner Default: Material failure of Owner, which has neither been remedied nor waived, to pay Contractor progress payments due under the Construction Contract or to perform other material terms of the Construction Contract, if such failure is the cause of the asserted Contractor Default and is sufficient to justify Contractor termination of the Construction Contract.

END OF DOCUMENT

DOCUMENT 00612

**CONSTRUCTION LABOR AND MATERIAL PAYMENT BOND**
STANDARD EDITION

THIS CONSTRUCTION LABOR AND MATERIAL PAYMENT BOND ("Bond") is dated _____, is in the penal sum of _____
_____
[one hundred percent of the Contract Sum, and is entered into by and between the parties listed below to ensure the payment of claimants under the Construction Contract listed below. This Bond consists of this page and the Bond Terms and Conditions, paragraphs 1 through 13, attached to this page. Any singular reference to _____ [insert name of Contractor] ("Contractor"), _____ [insert name of Surety] ("Surety"), the Sonoma Valley County Sanitation District, a local district of the State of California ("Owner") or other party shall be considered plural where applicable.

| CONTRACTOR: | SURETY: |
|---|---|
| _____ | _____ |
| Name | Name |
| _____ | _____ |
| Address | Principal Place of Business |
| _____ | _____ |
| City/State/Zip | City/State/Zip |

CONSTRUCTION CONTRACT:

**SONOMA VALLEY COUNTY SANITATION DISTRICT, SEWER TRUNK REPLACEMENT (AGUA CALIENTE CREEK CROSSING)**
CONTRACT NUMBER 70-712-7 #7

at Sonoma County, California

Signed _____, 20____ in the Amount of $_____(the "Penal Sum")

| CONTRACTOR AS PRINCIPAL | SURETY |
|---|---|
| Company: (Corp. Seal) | Company: (Corp. Seal) |
| Signature:_____ | Signature: _____ |
| Name and Title:_____ | Name and Title:_____ |
| _____ | _____ |

## BOND TERMS AND CONDITIONS

1. Contractor and Surety, jointly and severally, bind themselves, their heirs, executors, administrators, successors and assigns to Owner and to Claimants, to pay for labor, materials and equipment furnished for use in the performance of the Construction Contract, which is incorporated herein by reference.

2. With respect to Owner, this obligation shall be null and void if Contractor:

   2.1 Promptly makes payment, directly or indirectly, for all sums due Claimants; and

   2.2 Defends, indemnifies and holds harmless Owner from all claims, demands, liens or suits by any person or entity who furnished labor, materials or equipment for use in the performance of the Construction Contract, provided Owner has promptly notified Contractor and Surety (at the address set forth on the signature page of this Bond) of any claims, demands, liens or suits and tendered defense of such claims, demands, liens or suits to Contractor and Surety, and provided there is no Owner Default.

3. With respect to Claimants, this obligation shall be null and void if Contractor promptly makes payment, directly or indirectly through its Subcontractors, for all sums due Claimants. If Contractor or its Subcontractors, however, fail to pay any of the persons named in Section 9100 of the California Civil Code, or amounts due under the Unemployment Insurance Code with respect to Work or labor performed under the Contract, or for any amounts required to be deducted, withheld, and paid over to the Employment Development Department from the wages of employees of Contractor or Subcontractors pursuant to Section 13020 of the Unemployment Insurance Code, with respect to such Work and labor, then Surety shall pay for the same, and also, in case suit is brought upon this Bond, a reasonable attorney's fee, to be fixed by the court.

4. Consistent with the California Mechanic's Lien Law, Civil Code §8000, *et seq*., Surety shall have no obligation to Claimants under this Bond unless the Claimant has satisfied all applicable notice requirements.

5. Surety's total obligation shall not exceed the amount of this Bond, and the amount of this Bond shall be credited for any payments made in good faith by Surety under this Bond.

6. Amounts due Contractor under the Construction Contract shall be applied first to satisfy claims, if any, under any Construction Performance Bond and second, to satisfy obligations of Contractor and Surety under this Bond.

7. Owner shall not be liable for payment of any costs, expenses, or attorney's fees of any Claimant under this Bond, and shall have under this Bond no obligations to make payments to, give notices on behalf of, or otherwise have obligations to Claimants under this Bond.

8. Surety hereby waives notice of any change, including changes of time, to the Construction Contract or to related subcontracts, purchase orders and other obligations. Surety further hereby stipulates and agrees that no change, extension of time, alteration or addition to the terms of the Construction Contract, or to the Work to be performed thereunder, or materials or equipment to be furnished thereunder or the Specifications accompanying the same, shall in any way affect its

obligations under this Bond, and it does hereby waive any requirement of notice or any such change, extension of time, alteration or addition to the terms of the Construction Contract or to the Work or to the Specifications or any other changes.

9. Suit against Surety on this Bond may be brought by any Claimant, or its assigns, at any time after the Claimant has furnished the last of the labor or materials, or both, but, per Civil Code §9558, must be commenced before the expiration of six months after the period in which stop notices may be filed as provided in Civil Code §9356.

10. All notices to Surety or Contractor shall be mailed or delivered (at the address set forth on the signature page of this Bond), and all notices to Owner shall be mailed or delivered as provided in Document 00520 (Agreement). Actual receipt of notice by Surety, Owner or Contractor, however accomplished, shall be sufficient compliance as of the date received at the foregoing addresses.

11. This Bond has been furnished to comply with the California Mechanic's Lien Law including, but not limited to, Civil Code §§9550, 9554, *et seq*. Any provision in this Bond conflicting with said statutory requirements shall be deemed deleted herefrom and provisions conforming to such statutory or other legal requirements shall be deemed incorporated herein. The intent is that this Bond shall be construed as a statutory bond and not as a common law bond.

12. Upon request by any person or entity appearing to be a potential beneficiary of this Bond, Contractor shall promptly furnish a copy of this Bond or shall permit a copy to be made.

13. Definitions.

13.1.1 Claimant: An individual or entity having a direct contract with Contractor or with a Subcontractor of Contractor to furnish labor, materials or equipment for use in the performance of the Contract, as further defined in California Civil Code §9100. The intent of this Bond shall be to include without limitation in the terms "labor, materials or equipment" that part of water, gas, power, light, heat, oil, gasoline, telephone service or rental equipment used in the Construction Contract, architectural and engineering services required for performance of the Work of Contractor and Contractor's Subcontractors, and all other items for which a stop notice might be asserted. The term Claimant shall also include the Unemployment Development Department as referred to in Civil Code §9554(b).

13.1.2 Construction Contract: The agreement between Owner and Contractor identified on the signature page of this Bond, including all Contract Documents and changes thereto.

13.1.3 Owner Default: Material failure of Owner, which has neither been remedied nor waived, to pay the Contractor as required by the Construction Contract, provided that failure is the cause of the failure of Contractor to pay the Claimants and is sufficient to justify termination of the Construction Contract.

END OF DOCUMENT

DOCUMENT 00630

# GUARANTY

To the SONOMA VALLEY COUNTY SANITATION DISTRICT, for construction of

**SONOMA VALLEY COUNTY SANITATION DISTRICT, SEWER TRUNK REPLACEMENT (AGUA CALIENTE CREEK CROSSING)**

Sonoma County, California

The undersigned guarantees all construction performed on this Project and also guarantees all material and equipment incorporated therein.

Contractor hereby grants to Owner for a period of one year following the date of Final Acceptance of the Work completed, or such longer period of time as may be prescribed by laws and regulations, or by the terms of the Contract Documents (the "Guaranty Period"), its unconditional warranty of the quality and adequacy of all of the Work including, without limitation, all labor, materials and equipment provided by Contractor and its Subcontractors of all tiers in connection with the Work. Without limiting the generality of the forgoing warranties, if the performance of materials or equipment involves or affects water-tightness (above grade or below grade) or any type of moisture intrusion, Contractor shall act as co-guarantor of such materials and equipment for either the term of the Extended Warranty pursuant to Document 00700 (General Conditions) for such materials or equipment or 3 years, whichever is shorter.

Neither final payment nor use or occupancy of the Work performed by the Contractor shall constitute an acceptance of Work not done in accordance with this Guaranty or relieve Contractor of liability in respect to any express warranties or responsibilities for faulty materials or workmanship. Contractor shall remedy any defects in the Work and pay for any damage resulting therefrom, which shall appear within the Guaranty Period.

If within the Guaranty Period any Work is found to be Defective, Contractor shall promptly, without cost to Owner and in accordance with Owner's written instructions, correct such Defective Work. Contractor shall remove any Defective Work rejected by Owner and replace it with Work that is not Defective, and satisfactorily correct or remove and replace any damage to other Work or the work of others resulting therefrom. If Contractor fails to promptly comply with the terms of such instructions, or in an emergency where delay would cause serious risk of loss or damage, Owner may have the Defective Work corrected or the rejected Work removed and replaced. Contractor shall pay for all claims, costs, losses and damages caused by or resulting from such removal and replacement. Where Contractor fails to correct Defective Work, or defects are discovered outside the correction period, Owner shall have all rights and remedies granted by law.

Inspection of the Work shall not relieve Contractor of any of its obligations under the Contract Documents. Even though equipment, materials, or Work required to be provided under the Contract Documents have been inspected, accepted, and estimated for payment, Contractor shall, at its own expense, replace or repair any such equipment, material, or Work found to be Defective or otherwise not to comply with the requirements of the Contract Documents up to the end of the guaranty period.

All abbreviations and definitions of terms used in this Agreement shall have the meanings set forth in the Contract Documents, including, without means of limitation, Document 00700 (General Conditions) and Section 01420 (References and Definitions).

The foregoing Guaranty is in addition to any other warranties of Contractor contained in the Contract Documents, and not in lieu of, any and all other liability imposed on Contractor under the Contract Documents and at law with respect to Contractor's duties, obligations, and performance under the Contract Documents. In the event of any conflict or inconsistency between the terms of this Guaranty and any warranty or obligation of the Contractor under the Contract Documents or at law, such inconsistency or conflict shall be resolved in favor of the higher level of obligation of the Contractor.

_____
[Contractor's name]

By: _____
[Signature]

_____
[Please print name here]

Title: _____

Business Address:_____
_____
_____

Date: _____

END OF DOCUMENT

DOCUMENT 00650

**AGREEMENT AND RELEASE OF ANY AND ALL CLAIMS**

THIS AGREEMENT AND RELEASE OF ANY AND ALL CLAIMS ("Agreement and Release"), made and entered into this _____ [date] day of _____ [month], _____ [year], by and between the Sonoma Valley County Sanitation District, a local district of the State of California ("Owner"), and _____ [name of Contractor] ("Contractor"), whose place of business is at _____ _____ [address of Contractor].

RECITALS

A. Owner and Contractor entered into Contract Number 70-712-7 #7 (the "Contract").

B. The Work under the Contract has been completed.

Now, therefore, it is mutually agreed between Owner and Contractor as follows:

AGREEMENT

1. Contractor will not be assessed liquidated damages except as detailed below:

| | |
|---|---|
| Original Contract Sum | $ _____ |
| Modified Contract Sum | $ _____ |
| Payment to Date | $ _____ |
| Liquidated Damages | $ _____ |
| Payment Due Contractor | $ _____ |

2. Subject to the provisions of this Agreement and Release, Owner will forthwith pay to Contractor the sum of $_____ Dollars and _____ Cents ($_____) under the Contract, less any amounts withheld under the Contract or represented by any Notice to Withhold Funds on file with Owner as of the date of such payment.

3. Contractor acknowledges and hereby agrees that there are no unresolved or outstanding claims in dispute against Owner arising from the Contract, except for the claims described in paragraph 4 of this Document 00650. It is the intention of the parties in executing this Agreement and Release that this Agreement and Release shall be effective as a full, final and general release of all claims, demands, actions, causes of action, obligations, costs, expenses, damages, losses and liabilities of Contractor against Owner, and all of its agents, employees, consultants, inspectors, representatives, assignees and transferees, including without limitation the Sonoma County Water Agency ("Agency"), except for the Disputed Claims set forth in paragraph 4 of this Document 00650. Nothing in this Agreement and Release shall limit or modify Contractor's continuing obligations described in paragraph 6 of this Document 00650.

4. The following claims submitted under Document 00700 (General Conditions), Article 12, are disputed (hereinafter, the "Disputed Claims") and are specifically excluded from the operation of this Agreement and Release:

| Claim No. | Date Submitted | Description of Claim | Amount of Claim |
|---|---|---|---|

**[Insert information, including attachment if necessary]**

5. Consistent with California Public Contract Code Section 7100, Contractor hereby agrees that, in consideration of the payment set forth in paragraph 2 of this Document 00650, Contractor hereby releases and forever discharges Owner, and all of its agents, employees, consultants, inspectors, assignees and transferees from any and all liability, claims, demands, actions or causes of action of whatever kind or nature arising out of or in any way concerned with the Work under the Contract.

6. Guarantees and warranties for the Work, and any other continuing obligation of Contractor, shall remain in full force and effect as specified in the Contract Documents.

7. Contractor shall immediately defend, indemnify and hold harmless Owner, any Owner's Representatives, Engineer, and all of their agents, employees, consultants, inspectors, assignees and transferees, including without limitation the Agency, from any and all claims, demands, actions, causes of action, obligations, costs, expenses, damages, losses and liabilities that may be asserted against them by any of Contractor's suppliers and/or Subcontractors of any tier and/or any suppliers to them for any and all labor, materials, supplies and equipment used, or contemplated to be used in the performance of the Contract, except for the Disputed Claims set forth in paragraph 4 of this Document 00650.

8. Contractor hereby waives the provisions of California Civil Code Section 1542, which provide as follows:

> A general release does not extend to claims which the creditor does not know or suspect to exist in his favor at the time of executing the release,

which if known by him, must have materially affected his settlement with the debtor.

9. The provisions of this Agreement and Release are contractual in nature and not mere recitals and shall be considered independent and severable, and if any such provision or any part thereof shall be at any time held invalid in whole or in part under any federal, state, county, municipal or other law, ruling, or regulation, then such provision, or part thereof shall remain in force and effect only to the extent permitted by law, and the remaining provisions of this Agreement and Release shall also remain in full force and effect, and shall be enforceable.

10. Contractor represents and warrants that it is the true and lawful owner of all claims and other matters released pursuant to this Agreement and Release, and that it has full right, title and authority to enter into this instrument. Each party represents and warrants that it has been represented by counsel of its own choosing in connection with this Agreement and Release.

11. All rights of Owner shall survive completion of the Work or termination of the Contract, and execution of this Agreement and Release.

* * * CAUTION: THIS IS A RELEASE - READ BEFORE EXECUTING * * *

SONOMA VALLEY COUNTY SANITATION DISTRICT,
A Local District of the State of California

By: _____

Its: _____

**[CONTRACTOR]**

By: _____

Name: _____

Its: _____
(President, Vice President, General Manager)

REVIEWED AS TO FORM:

_____

County Counsel

_____, 20 _____

END OF DOCUMENT

DOCUMENT 00660

**SUBSTITUTION REQUEST FORM**

| During Bid Period To: | After Award of Contract To: |
|---|---|
| Victor H. Swift, P.E.<br>Sonoma Valley County Sanitation District<br>Fax: 707-544-6123 | Construction Management Section<br>Sonoma Valley County Sanitation District<br>Fax: 707-544-6123 |

Project: Sonoma Valley County Sanitation District, Sewer Trunk Replacement (Agua Caliente Creek Crossing)

Bidder: _____

Subcontractor/Supplier: _____

Drawing Sheet Reference/Detail No: _____

The undersigned Bidder submits for consideration the following equipment instead of the specified item for the above Project:

| Section | Paragraph | Specified Item |
|---|---|---|
| _____ | _____ | _____ |
| _____ | _____ | _____ |

Proposed Substitution: _____

_____

The undersigned encloses the information required herein. If this Document 00660 is being submitted by a Bidder wishing to use "equal" item(s) as provided in Document 00200 (Instructions to Bidders), the undersigned Bidder must also enclose the technical information (other than cost) otherwise required for a post-Award of Contract Request for Substitution ("RFS") under Section 01600 (Product Requirements). However, if this Document 00660 is being submitted under provisions of Contract Documents after Award of Contract, the undersigned Contractor must include all information required under Section 01600 (Product Requirements).

The undersigned has (a) attached manufacturer's literature, including complete technical data and laboratory test results, if applicable, (b) attached an explanation of why proposed substitution is a true equivalent to specified item, (c) included complete information on changes to Contract Documents that the proposed substitution will require for its proper installation, and (d) filled in the blanks below:

A. Does the substitution affect dimensions shown on Drawings? (If yes, please explain)

_____

B. Are the manufacturer's guarantees and warranties on the proposed substitution items identical to those on the specified items? If there are differences, please specify each and every difference in detail.

_____

C. What effect does the substitution have on other contractors, trades, or suppliers?

_____

D. What are the differences between the proposed substitution and the specified item? If proposed substitution has a color or pattern, provide a color board showing proposed substitution in relation to the other adjacent colors and patterns.

_____

E. Will granting the requested substitution cause any schedule delay? (If yes, please explain)

_____

The undersigned Bidder certifies that the function, appearance, and quality of the proposed substitution are equivalent or superior to those of the specified item.

Submitted by:

_____
Bidder

_____
Signature

_____
Name

_____
Address

_____
City/State/Zip

Telephone: _____

Date: _____

For Use by Owner:

___ Accepted _____Accepted as Noted

___ Not Accepted _____Received Too Late

By: _____
Owner's Representative

Date: _____

Remarks: _____

_____

_____

_____

END OF DOCUMENT

DOCUMENT 00670

# ESCROW BID DOCUMENTS

1. Requirements for Escrow Bid Documents.

   a. Within the time period established in Document 00200 (Instructions to Bidders), Contractor shall submit to Owner a set of Escrow Bid Documents as defined in paragraph 2 below. Escrow Bid Documents will be used only in the manner and for the purposes described in this Document 00670.

   b. The submission of the Escrow Bid Documents, as with the bonds and insurance documents required under Document 00200 (Instructions to Bidders), is considered an essential part of the Contract award. Should Contractor fail to make the submission within the allowed time specified, Contractor may be deemed to have failed to enter into the Contract, Contractor shall forfeit the amount of its Bid security accompanying Contractor's Bid, and Owner may award the Contract to the next lowest responsive responsible Bidder.

   c. NO PAYMENTS WILL BE MADE, NOR WILL OWNER ACCEPT CHANGE ORDER REQUESTS UNTIL THE ABOVE-REQUIRED INFORMATION IS SUBMITTED AND APPROVED. ALTERNATIVELY, OWNER MAY DECLARE THE BID NON-RESPONSIVE.

   d. Contractor shall submit the Escrow Bid Documents, in person by an authorized representative of the Contractor, to:

      Construction Management Section
      Sonoma Valley County Sanitation District
      c/o Sonoma County Water Agency
      404 Aviation Boulevard
      Santa Rosa, California

2. Scope of Escrow Bid Documents.

   a. Within the time period specified in Document 00200 (Instructions to Bidders), Contractor shall submit one copy of all documentary information received or generated by Contractor in preparation of Bid prices for the Contract Documents, as specified in paragraphs 5 and 6 of this Document 00670. This material is referred to in this Document 00670 as the "Escrow Bid Documents." Contractor's Escrow Bid Documents will be held in escrow as provided in this Document 00670.

   b. Contractor represents and agrees, as a condition of award of the Contract, that the Escrow Bid Documents constitute all written information used in the preparation of its Bid, and that no other written Bid preparation information shall be considered in resolving disputes or claims or may be considered in legal proceedings. Contractor also agrees that nothing in the Escrow Bid Documents shall change or modify the terms or conditions of the Contract

Documents. Contractor is advised that the Escrow Bid Documents will only be used as a guide in the resolution of disputes and claims.

3. Ownership of Escrow Bid Documents.

   a. The Escrow Bid Documents are, and shall always remain, the property of Contractor, subject to joint review by Owner and Contractor, as provided in this Document 00670.

   b. Owner stipulates and expressly acknowledges that the Escrow Bid Documents constitute trade secrets. This acknowledgement is based on Owner's express understanding that the information contained in the Escrow Bid Documents is not known outside Contractor's business, is known only to a limited extent and only by a limited number of Contractor's Employees, is safeguarded while in Contractor's possession, is extremely valuable to Contractor and could be extremely valuable to Contractor's competitors by virtue of it reflecting Contractor's contemplated construction techniques. Owner further acknowledges that the Escrow Bid Documents and the information contained in them are made available to Owner only because such action is an express pre-requisite to award of the Contract. Owner agrees to safeguard the Escrow Bid Documents, and all information contained in them, against disclosure to the fullest extent permitted by law, consistent with paragraph 4 of this Document 00670.

4. Escrow Bid Documents may be used in the determination of price adjustments and Change Orders and in the settlement of disputes and claims. If used in legal proceedings, Escrow Bid Documents shall be subject to an appropriate protective order limiting their disclosure.

5. Format and Contents of Escrow Bid Documents.

   a. Contractor may submit Escrow Bid Documents in their usual cost-estimating format; a standard format is not required. Contractor shall prepare and submit the Escrow Bid Documents in English.

   b. Owner requires Contractor to itemize clearly in the Escrow Bid Documents the estimated costs of performing the Work of each Bid item contained in Contractor's Bid. Contractor shall separate Bid items into sub-items as required to present a detailed cost estimate and allow a detailed cost review. The Escrow Bid Documents shall include all Subcontractor bids or quotes, supplier bids or quotes, quantity take-offs, crews, equipment, calculations of rates of production and progress, copies of quotes from Subcontractors and suppliers, and memoranda, narratives, add/deduct sheets, and all other information used by Contractor to arrive at the prices contained in the Bid. Escrow Bid Documents shall include costs of scheduled maintenance, depreciation, fleet rental expense discounts and incentives, and similar cost adjustments if used by Contractor to calculate its Bid prices. Estimated costs shall be broken down into Contractor's usual estimate categories such as direct labor, repair labor, equipment ownership and operation, expendable materials, permanent materials and subcontract costs as appropriate. Plant and equipment and indirect costs should be detailed in Contractor's usual format. Contractor shall identify its allocation of indirect costs, contingencies, markup and other items to each Bid item.

c. Contractor shall identify all costs. For Bid items amounting to less than $10,000, Contractor may estimate costs without a detailed cost estimate, provided that Contractor includes applicable labor, equipment, materials and subcontracts, and allocates applicable indirect costs, contingencies and markup.

d. Bid documents provided by Owner should not be included in the Escrow Bid Documents unless needed to comply with these requirements.

6. Submittal of Escrow Bid Documents.

a. Submit Escrow Bid Documents in a container clearly marked on the outside with Contractor's name, date of submittal, Project name and the words "Escrow Bid Documents - Open only in the presence of Authorized Representatives of both Owner and Contractor." Owner will review the Escrow Bid Documents for initial compliance. Owner has three Days after receipt of Bidder's Escrow Bid Documents to demand additional information.

b. By submitting Escrow Bid Documents, Contractor represents that the material in the Escrow Bid Documents constitutes all the documentary information used in preparation of the Bid and that Contractor has personally examined the contents of the Escrow Bid Documents container and has found that the documents in the container are complete. Contractor agrees that it will not introduce or rely on any other documents to prove how it prepared its Bid.

c. If Contractor's Bid is based upon subcontracting any part of the Work, each Subcontractor whose total subcontract price exceeds five percent of the total Contract Sum proposed by Contractor, shall provide separate Escrow Documents to be included with those of Contractor. Such documents shall be opened and examined in the same manner and at the same time as the examination described above for Contractor.

d. If Contractor wishes to subcontract any portion of the Work after award, Owner retains the right to require Contractor to submit Escrow Documents for the Subcontractor before approval of the subcontract.

7. Storage, Examination, and Final Disposition of Escrow Bid Documents.

a. The Escrow Bid Documents will be placed in escrow until Final Completion of Work on the Project, in a mutually agreeable institution. Contractor shall pay the cost of storage for the Escrow Bid Documents until that time. The storage facilities shall be the appropriate size for all the Escrow Bid Documents and located conveniently to both Owner's and, to the extent reasonably possible, Contractor's offices, but in no event outside the County of Sonoma.

b. Both Owner and Contractor shall examine the Escrow Bid Documents, at any time deemed necessary by either Owner or Contractor, to assist in the negotiation of price adjustments and Change Orders or the settlement of disputes and claims. Examination of the Escrow Bid Documents is subject to the following conditions:

i. As trade secrets, the Escrow Bid Documents are proprietary and confidential under paragraph 3.b. of this Document 00670.

ii. Owner and Contractor (and any Subcontractor, to the extent Escrow Bid Documents are required by a Subcontractor) shall each designate in writing to the other party(s) at least seven Days prior to any examination, representatives who are authorized to examine the Escrow Bid Documents. Except as otherwise provided in a court order, no other persons shall have access to the Escrow Documents.

iii. Except as otherwise provided in a court order, access to the documents may take place only in the presence of duly designated representatives of both Owner and Contractor. If Contractor fails to designate a representative or appear for joint examination on seven Days' notice, then Owner's Representative may examine the Escrow Bid Documents upon an additional three Days' notice.

iv. Following Final Completion of Work on the Project and achievement of final settlement, Owner shall direct the escrow agent holding the Escrow Bid Documents in writing to return those documents to Contractor.

END OF DOCUMENT

DOCUMENT 00680

**ESCROW AGREEMENT FOR SECURITY DEPOSITS IN LIEU OF RETENTION**
P.C.C. §22300

THIS ESCROW AGREEMENT ("Escrow Agreement") is made and entered into this _____ [date] day of _____ [month], _____ [year], by and between the SONOMA VALLEY COUNTY SANITATION DISTRICT, a local district of the State of California (hereinafter called the "Owner"), whose address is 404 Aviation Blvd., Santa Rosa, CA 95403-9019; _____ [name of Contractor] ("Contractor"), whose place of business is located at _____ [Contractor's Address]; and [Owner, as escrow agent …OR… _____ [Name of Bank], a state or federally chartered bank in the State of California, whose place of business is located at _____] ("Escrow Agent").

For the consideration hereinafter set forth, Owner, Contractor and Escrow Agent agree as follows:

1. Pursuant to Section 22300 of Public Contract Code of the State of California, Contractor has the option to deposit securities with Escrow Agent as a substitute for retention earnings required to be withheld by Owner pursuant to Contract Number 70-712-7 #7 entered into between Owner and Contractor for Sonoma Valley County Sanitation District, Sewer Trunk Replacement (Agua Caliente Creek Crossing) in the amount of _____ [Contract Sum] dated _____ [Date of Contract] (the "Contract"). Alternatively, on written request of Contractor, Owner shall make payments of the retention earnings directly to Escrow Agent. When Contractor deposits the securities as a substitute for Contract earnings, Escrow Agent shall notify Owner within ten Days of the deposit. The market value of the securities at the time of substitution shall be at least equal to the cash amount then required to be withheld as retention under terms of Contract between Owner and Contractor. Securities shall be held in name of _____, and shall designate Contractor as the beneficial owner.

2. Owner shall make progress payments to Contractor for those funds which otherwise would be withheld from progress payments pursuant to Contract provisions, provided that Escrow Agent holds securities in form and amount specified in paragraph 1 of this Document 00680.

3. When Owner makes payment(s) of retention earned directly to Escrow Agent, Escrow Agent shall hold said payment(s) for the benefit of Contractor until the time that the escrow created under this Escrow Agreement is terminated. Contractor may direct the investment of the payments into securities. All terms and conditions of this Escrow Agreement and the rights and responsibilities of the parties shall be equally applicable and binding when Owner pays Escrow Agent directly.

4. Contractor shall be responsible for paying all fees for the expenses incurred by Escrow Agent in administering the Escrow Account, and all expenses of Owner. Such expenses and payment terms shall be determined by Owner, Contractor, and Escrow Agent.

5. Interest earned on securities or money market accounts held in escrow and all interest earned on that interest shall be for sole account of Contractor and shall be subject to withdrawal by Contractor at any time and from time to time without notice to Owner.

6. Contractor shall have the right to withdraw all or any part of the principal in the Escrow Account only by written notice to Escrow Agent accompanied by written authorization from Owner to Escrow Agent that Owner consents to withdrawal of amount sought to be withdrawn by Contractor.

7. Owner shall have the right to draw upon the securities in event of default by Contractor. Upon seven Days written notice to Escrow Agent from Owner of the default, Escrow Agent shall immediately convert the securities to cash and shall distribute the cash as instructed by Owner.

8. Upon receipt of written notification from Owner certifying that the Contract is final and complete, and that Contractor has complied with all requirements and procedures applicable to the Contract, Escrow Agent shall release to Contractor all securities and interest on deposit less escrow fees and charges of the Escrow Account. The escrow shall be closed immediately upon disbursement of all moneys and securities on deposit and payments of fees and charges.

9. Escrow Agent shall rely on written notifications from Owner and Contractor pursuant to paragraphs 5 through 8, inclusive, of this Document 00680 and Owner and Contractor shall hold Escrow Agent harmless from Escrow Agent's release and disbursement of securities and interest as set forth.

10. Names of persons who are authorized to give written notice or to receive written notice on behalf of Owner and on behalf of Contractor in connection with the foregoing, and exemplars of their respective signatures are as follows:

On behalf of Owner:

General Manager
Title
Grant Davis
Name

Signature
404 Aviation Boulevard
Address
Santa Rosa, CA 95403
City/State/Zip

On behalf of Contractor:

Title

Name

Signature

Address

City/State/Zip

On behalf of Escrow Agent:

Title

Name

Signature

Address

City/State/Zip

At the time the Escrow Account is opened, Owner and Contractor shall deliver to Escrow Agent a fully executed counterpart of this Document 00680.

/
/
/
/
/
/
/
/
/
/
/
/
/
/
/

IN WITNESS WHEREOF, the parties have executed this Escrow Agreement by their proper officers on the date first set forth above.

Owner

_____

_____
Title

_____
Name

_____
Signature

Contractor

_____

_____
Title

_____
Name

_____
Signature

Escrow Agent

_____

_____
Title

_____
Name

_____
Signature

REVIEWED AS TO FORM:

_____
County Counsel

_____
Date

END OF DOCUMENT

# CONDITIONS OF THE CONTRACT

DOCUMENT 00700

# GENERAL CONDITIONS

STANDARD EDITION

TABLE OF CONTENTS


1. GENERAL ..... 1
   - 1.1 Documents ..... 1
   - 1.2 Exercise Of Contract Responsibilities ..... 1
   - 1.3 Defined Terms ..... 1
2. BIDDING ..... 1
   - 2.1 Investigation Prior To Bidding ..... 1
   - 2.2 Subcontractors ..... 2
3. CONTRACT AWARD AND COMMENCEMENT OF THE WORK ..... 3
   - 3.1 Award Of Contract ..... 3
   - 3.2 Commencement Of Work ..... 3
4. BONDS AND INSURANCE ..... 3
   - 4.1 Bonds ..... 3
   - 4.2 Insurance ..... 3
5. DRAWINGS AND SPECIFICATIONS ..... 3
   - 5.1 Intent ..... 3
   - 5.2 Drawing Details ..... 4
   - 5.3 Interpretation Of Drawings And Specifications ..... 4
   - 5.4 Checking Of Drawings ..... 5
   - 5.5 Standards To Apply Where Specifications Are Not Furnished ..... 5
   - 5.6 Deviation from Specifications and Drawings ..... 5
   - 5.7 Precedence Of Documents ..... 6
   - 5.8 Ownership And Use Of Drawings, Specifications And Contract Documents ..... 6
6. CONSTRUCTION BY OWNER OR BY SEPARATE CONTRACTORS ..... 6
   - 6.1 Owner's Right To Perform Construction And To Award Separate Contracts ..... 6
   - 6.2 Mutual Responsibility ..... 6
   - 6.3 Owner Authority Over Coordination ..... 7
7. OWNER AND PAYMENT ..... 8
   - 7.1 Owner's Representative(s) ..... 8
   - 7.2 Means And Methods Of Construction ..... 8
   - 7.3 Receipt And Processing Of Applications For Payment ..... 8
8. CONTROL OF THE WORK ..... 8
   - 8.1 Supervision Of Work By Contractor ..... 8
   - 8.2 Observation Of Work By Owner ..... 9
   - 8.3 Access To Work ..... 9

8.4 Existing Utilities Shown or Indicated In Contract Documents ....10
8.5 Protection of Underground Facilities When Digging Trenches Or During Excavation....11

9. WARRANTY, GUARANTY, AND INSPECTION OF WORK ....12

9.1 Warranty And Guaranty ....12
9.2 Inspection Of Work ....13
9.3 Correction Of Defective Work ....15
9.4 Acceptance And Correction Of Defective Work By Owner ....16
9.5 Rights Upon Inspection, Correction, Or Acceptance ....16
9.6 Proof Of Compliance Of Contract Provisions ....17

10. CONTRACTOR'S ORGANIZATION AND EQUIPMENT ....17

10.1 Contractor's Legal Address ....17
10.2 Contractor's Office At The Work Site ....17
10.3 Contractor's Superintendents Or Forepersons ....17
10.4 Proficiency In English ....18
10.5 Contractor's And Subcontractors' Employees ....18
10.6 Contractor To Supply Sufficient Workers And Materials ....18
10.7 Contractor To List Trades Working ....19
10.8 Contractor's Use Of The Site ....19
10.9 Apprenticeship Program ....19

11. PROSECUTION AND PROGRESS OF THE WORK ....20

11.1 Schedules And Examinations Of Contract Documents ....20
11.2 Cost Data ....21

12. CLAIMS BY CONTRACTOR ....22

12.1 General ....22
12.2 Procedure ....23
12.3 Claim Format ....24
12.4 Mediation ....24
12.5 Subcontractor Claims ....24
12.6 Exclusive Remedy ....25
12.7 Final Claim Disposition ....25

13. LEGAL AND MISCELLANEOUS ....25

13.1 Laws And Regulations ....25
13.2 Permits And Taxes ....26
13.3 Responsibility Of Contractor And Indemnification ....26
13.4 Concealed Or Unknown Conditions ....27
13.5 Notice Of Hazardous Waste Or Materials Conditions ....28
13.6 Suspension Of Work ....29
13.7 Termination Of Contract For Cause ....29
13.8 Termination Of Contract For Convenience ....31
13.9 Contingent Assignment Of Subcontracts ....33
13.10 Remedies and Contract Integration ....34
13.11 Patents ....34
13.12 Substitution For Patented And Specified Articles ....35
13.13 Interest Of Public Officers ....35

13.14 Limit Of Liability ....35

14. MODIFICATIONS OF CONTRACT DOCUMENTS....35

14.1 Alterations, Modifications And Force Account Work ....35

15. TIME ALLOWANCES....37

15.1 Time Allowances For Performance Of Contract Documents....37
15.2 Entitlement to Change Of Contract Time ....37
15.3 Weather-Related Delays....38
15.4 Notice Of Delay ....39
15.5 Time Extensions And/Or Compensation Entitlement For Delays ....39
15.6 Liquidated Damages....40

16. WORKING CONDITIONS AND PREVAILING WAGES ....40

16.1 Use Of Site/Sanitary Rules ....40
16.2 Protection Of Work, Persons, And Property ....41
16.3 Responsibility For Safety And Health....42
16.4 Emergencies ....42
16.5 Use Of Roadways And Walkways....42
16.6 Nondiscrimination ....43
16.7 Prevailing Wages....43
16.8 Environmental Controls ....44
16.9 Shoring Safety Plan ....44

# GENERAL CONDITIONS

## 1. GENERAL

### 1.1 Documents

1.1.A. Contract Documents are complementary; what is called for by one is as binding as if called for by all. Contract Documents shall not be construed to create a contractual relationship of any kind between (1) Engineer or any Owner's Representative and Contractor; (2) Owner and/or its representatives and a Subcontractor, sub-Subcontractor, or supplier of any Project labor, materials, or equipment; or (3) between any persons or entities other than Owner and Contractor. Owner shall be deemed to be an intended third-party beneficiary of each agreement referenced in clause (2) above, and each such agreement shall so provide. Contractor is fully responsible for Contractor's own acts and omissions. Contractor is responsible for all acts and omissions of its Subcontractors, suppliers, and other persons and organizations performing or furnishing any of the Work, labor, materials, or equipment under a direct or indirect contract with Contractor.

### 1.2 Exercise Of Contract Responsibilities

1.2.A. In exercising its responsibilities and authorities under the Contract Documents, Owner does not assume any duties or responsibilities to any Subcontractor or supplier and does not assume any duty of care to Contractor, Contractor's Subcontractors or suppliers. Except as expressly set forth in the Contract Documents, in exercising their respective responsibilities and authorities under the Contract Documents, neither Engineer nor any Owner's Representative assumes any duties or responsibilities to any Subcontractor, sub-Subcontractor or supplier nor assumes any duty of care to Contractor or any Subcontractor, sub-Subcontractor or suppliers.

### 1.3 Defined Terms

1.3.A. All abbreviations and definitions of terms used and not otherwise defined in this Document 00700 are set forth in Section 01420 (References and Definitions). This Document 00700 subdivides at first level into Articles, and then into paragraphs.

## 2. BIDDING

### 2.1 Investigation Prior To Bidding

2.1.A. Prior to bidding, Bidders shall perform the work, investigations, research and analysis required by Article 5 of Document 00520 (Agreement). Under the Contract Documents, Contractor is charged with all information and knowledge that a reasonable Bidder would ascertain from having performed the required work, investigations, research, and analysis. Bid prices shall include entire cost of all "incidental work" to complete the Work, as that term is defined in Article 5 of this Document 00700.

2.1.B. Conditions Shown on Contract Documents: Information as to underground conditions, as-built conditions, or other conditions or obstructions indicated in the Contract Documents, *e.g.*, on Drawings or in Specifications, has been obtained with reasonable care, and has been recorded in good faith. Owner warrants, and Contractor may rely on, the accuracy of only limited types of information as discussed below.

1. Aboveground and As-Built Conditions: There is no express or implied warranty and no express or implied representation that any information as to aboveground conditions or as-built conditions indicated in the Contract Documents is correctly shown, or indicated, or complete. As a condition to bidding, Contractor shall verify by independent investigation all aboveground and as-built conditions. In submitting its Bid, Contractor shall rely on the results of its own independent investigation and shall not rely on Owner-supplied information regarding aboveground conditions and as-built conditions.
2. Subsurface Conditions: Contractor may rely only upon the general accuracy of actual reported depths, actual reported character of materials, actual reported soil types, actual reported water conditions, or actual obstructions shown or indicated in the Contract Documents. Owner is not responsible for (1) the completeness of any subsurface condition information for bidding or construction, (2) Contractor's conclusions or opinions drawn from any subsurface condition information, or (3) subsurface conditions that are not specifically shown. (For example, Owner is not responsible for soil conditions in areas contiguous to areas where a subsurface condition is shown.)
3. Conditions Shown in Reports and Drawings Supplied for Informational Purposes: Reference is made to Document 00320 (Geotechnical Data and Existing Conditions) for identification of geotechnical reports, "as-built" information, and other drawings or other documents describing physical conditions in or relating to existing surface or subsurface conditions or structures at or contiguous to the Site. These materials are not Contract Documents and, except for any "technical data" regarding subsurface conditions specifically identified in Document 00320 (Geotechnical Data and Existing Conditions), and "Underground Facilities" data, as limited in Document 00320 (Geotechnical Data and Existing Conditions), Contractor shall not in any manner rely on the information in these materials. Subject to the foregoing, Contractor shall make its own independent investigation of all conditions affecting the Work and must not rely on information provided by Owner.

**2.2 Subcontractors**

2.2.A. Consistent with Public Contract Code Sections 4101 *et seq.*, Contractor shall not substitute any other person or firm in place of any Subcontractor listed in the Bid. Subcontractors shall not assign or transfer their subcontracts or permit them to be performed by any other contractor without Owner's written approval. At Owner's request, Contractor shall provide Owner with a complete copy of all executed subcontracts or final commercial agreements with Subcontractors and/or suppliers.

2.2.B. Subcontract agreements shall preserve and protect the rights of Owner under the Contract Documents so that subcontracting will not prejudice such rights. To the extent of the Work to be performed by a Subcontractor, Contractor shall require the Subcontractor's written agreement (1) to be bound to the terms of Contract Documents and (2) to assume vis-à-vis Contractor all the obligations and responsibilities that Contractor assumes toward Owner under the Contract Documents. (These agreements include all warranties, claims procedures and rules governing submittals to which Contractor is subject under the Contract Documents.)

2.2.C. Contractor shall provide for the assignment to Owner of all rights any Subcontractor may have against any manufacturer, supplier, or distributor for breach of warranties

and guarantees relating to the Work performed by the Subcontractor under the Contract Documents.

## 3. CONTRACT AWARD AND COMMENCEMENT OF THE WORK

### 3.1 Award Of Contract

3.1.A. Owner will make the Award of Contract by issuing a Notice of Award. As a condition to Owner signing Document 00520 (Agreement), however, Contractor shall deliver to Owner the executed agreements, forms, bonds, and insurance documents required by Document 00200 (Instructions to Bidders) in the required quantities and within the required times.

### 3.2 Commencement Of Work

3.2.A. The Contract Time will commence to run on the 60th Day after the issuance of the Notice of Award or, if a Notice to Proceed is given, on the date indicated in the Notice to Proceed. See also paragraph 15.1.B of this Document 00700. Owner may give a Notice to Proceed at any time within 60 Days after the Notice of Award. Contractor shall not do any Work at the Site prior to the date on which the Contract Time commences to run.

## 4. BONDS AND INSURANCE

### 4.1 Bonds

4.1.A. At or before the date indicated in Document 00200 (Instructions to Bidders), Contractor shall file with Owner the following bonds:

1. Corporate surety bond, in the form of Document 00611 (Construction Performance Bond), in the penal sum of 100% of the Contractor's Bid as accepted, to guarantee faithful performance of the Work; and
2. Corporate surety bond, in the form of Document 00612 (Construction Labor and Material Payment Bond), in the penal sum of 100% of the Contractor's Bid as accepted, to guarantee payment of wages for services engaged and of bills contracted for materials, supplies, and equipment used in performance of Contract Documents.

4.1.B. Sureties shall be satisfactory to Owner. Corporate sureties on these bonds and on bonds accompanying Bids shall be duly licensed to do business in the State of California and shall have an A.M. Best Company financial rating of A or better.

### 4.2 Insurance

4.2.A. See paragraph 2.A of Document 00800 (Supplementary Conditions), incorporated herein by this reference.

## 5. DRAWINGS AND SPECIFICATIONS

### 5.1 Intent

5.1.A. Drawings and Specifications are intended to describe a functionally complete and operable Project (and all parts thereof) to be constructed in accordance with the requirements of Contract Documents. Contractor shall perform any work, provide services and furnish any materials or equipment that may reasonably be inferred from the requirements of Contract Documents or from prevailing custom or trade usage as

being required to produce this intended result. Contractor shall interpret words or phrases used to describe Work (including services), materials, or equipment that have well-known technical or construction industry or trade meaning in accordance with that meaning. Drawings' intent specifically includes the intent to depict construction that complies with all applicable laws, codes, and standards.

5.1.B. As part of the "Work," Contractor shall provide all labor, materials, equipment, machinery, tools, facilities, services, employee training and testing, hoisting facilities, Shop Drawings, storage, testing, security, transportation, disposal, the securing of all necessary or required field dimensions, the cutting or patching of existing materials, notices, permits, documents, reports, agreements, and any other items required or necessary to timely and fully complete Work described and the results intended by Contract Documents and, in particular, Drawings and Specifications. Divisions and Specification Sections and the identification on any Drawings shall not control Contractor in dividing Work among Subcontractors or suppliers or delineating the Work to be performed by any specific trade.

5.1.C. Contractor shall perform reasonably implied parts of Work as "incidental work" although absent from Drawings and Specifications. Incidental work includes any work not shown on Drawings or described in Specifications that is necessary or normally or customarily required as a part of the Work shown on Drawings or described in Specifications. Incidental work includes any work necessary or required to make each installation satisfactory, legally operable, functional, and consistent with the intent of Drawings and Specifications or the requirements of Contract Documents including required tasks to be performed under Division 1 of Specifications. Contractor shall perform incidental work without extra cost to Owner. Incidental work shall be treated as if fully described in Specifications and shown on Drawings, and the expense of incidental work shall be included in price Bid and Contract Sum.

**5.2 Drawing Details**

5.2.A. A typical or representative detail on Drawings shall constitute the standard for workmanship and material throughout corresponding parts of Work. Where necessary, and where reasonably inferable from Drawings, Contractor shall adapt such representative detail for application to such corresponding parts of Work. The details of such adaptation shall be subject to prior approval by Owner. Repetitive features shown in outline on Drawings shall be in exact accordance with corresponding features completely shown.

**5.3 Interpretation Of Drawings And Specifications**

5.3.A. Should any discrepancy appear or any misunderstanding arise as to the import of anything contained in Drawings and Specifications, or should Contractor have any questions or requests relating to Drawings or Specifications, Contractor shall refer the matter to Owner, in writing. Owner will issue with reasonable promptness written responses, clarifications or interpretations as Owner may determine necessary, which shall be consistent with the intent of and be reasonably inferable from Contract Documents. Such written clarifications or interpretations shall be binding upon Contractor. If Contractor believes that a written response, clarification or interpretation justifies an adjustment in the Contract Sum or Contract Time, Contractor shall give Owner prompt written notice as provided in Section 01250 (Modification Procedures). If the parties are unable to agree to the amount or extent of the adjustment, if any, then

Contractor shall perform the Work in conformance with Owner's response, clarification, or interpretation and may make a written claim for the adjustment as provided in Article 12 of this Document 00700.

**5.4 Checking Of Drawings**

5.4.A. Before undertaking each part of Work, Contractor shall carefully study and compare Contract Documents and check and verify pertinent figures shown in the Contract Documents and all applicable field measurements. Contractor shall be responsible for any errors that might have been avoided by such comparison. Figures shown on Drawings shall be followed; Contractor shall not scale measurements. Contractor shall promptly report to Owner, in writing, any conflict, error, ambiguity or discrepancy that Contractor may discover. Contractor shall obtain a written interpretation or clarification from Owner before proceeding with any Work affected thereby. Contractor shall provide Owner with a follow-up correspondence every ten Days until it receives a satisfactory interpretation or clarification.

**5.5 Standards To Apply Where Specifications Are Not Furnished**

5.5.A. The following general specifications shall apply wherever in the Specifications, or in any directions given by Owner in accordance with or supplementing Specifications, it is provided that Contractor shall furnish materials or manufactured articles or shall do Work for which no detailed specifications are shown. Materials or manufactured articles shall be of the best grade, in quality and workmanship, obtainable in the market from firms of established good reputation. If not ordinarily carried in stock, the materials or manufactured articles shall conform to industry standards for first-class materials or articles of the kind required, with due consideration of the use to which they are to be put. Work shall conform to the usual standards or codes, such as those cited in Section 01420 (References and Definitions), for first-class work of the kind required. Contractor shall specify in writing to Owner the materials to be used or Work to be performed under this paragraph 5.5 ten Business Days prior to furnishing such materials or performing such Work.

**5.6 Deviation from Specifications and Drawings**

5.6.A. Contractor shall perform Work in accordance with Drawings and Specifications. Contractor may deviate from Drawings or the dimensions given in the Drawings, and may deviate from the Specifications, only upon Owner's advance written approval of the proposed deviation. If Work requires a Submittal prior to commencement, then Contractor's performance of such Work prior to Submittal being favorably reviewed shall be at Contractor's sole risk.

5.6.B. Owner may order that locations, lines, and grades for Work vary from those shown on Drawings. Changes may be made in locations, lines, or grades for Work under any item of Contract Documents. No payment in addition to unit price fixed in the Contract Documents for Work under respective items will be allowed on account of variations from Drawings in unit price items. In lump sum contracts, or where there are no unit price items covering Work affected by variations of locations, lines, or grades, all changes in the Contract Documents will be made as set forth in Article 14 of this Document 00700.

### 5.7 Precedence Of Documents

5.7.A. In the case of discrepancy or ambiguity in the Contract Documents, the following order of precedence shall prevail:

1. Modifications in inverse chronological order (i.e., most recent first), and in the same order as specific portions they are modifying;
2. Document 00520 (Agreement), and terms and conditions referenced therein;
3. Document 00800 (Supplementary Conditions) and Document 00805 (Supplementary Conditions – Hazardous Materials);
4. Document 00700 (General Conditions);
5. Division 1 Specifications;
6. Drawings and Division 2 through 16 Specifications;
7. Written numbers over figures, unless obviously incorrect;
8. Figured dimensions over scaled dimensions;
9. Large-scale Drawings over small-scale Drawings.

5.7.B. Any conflict between Drawings and Division 2 through 16 Specifications will be resolved in favor of the document of the latest date (i.e., the most recent document), and if the dates are the same or not determinable, then in favor of Specifications.

5.7.C. Any conflict between a bill or list of materials shown in the Contract Documents and the actual quantities required to complete Work required by Contract Documents, will be resolved in favor of the actual quantities.

5.7.D. In the event the Specifications include divisions above Division 16 (e.g., Division 17 and above), then such divisions shall be included within the Contract Documents unless identified otherwise.

### 5.8 Ownership And Use Of Drawings, Specifications And Contract Documents

5.8.A. Drawings, Specifications, and other Contract Documents were prepared for use for Work of Contract Documents only. No part of Contract Documents shall be used for any other construction or for any other purpose except with the written consent of Owner. Any unauthorized use of Contract Documents is prohibited and at the sole liability of the user.

## 6. CONSTRUCTION BY OWNER OR BY SEPARATE CONTRACTORS

### 6.1 Owner's Right To Perform Construction And To Award Separate Contracts

6.1.A. Owner may perform with its own forces, construction or operations related to the Project. Owner may also award separate contracts in connection with other portions of the Project or other construction or operations, on the Site or areas contiguous to the Site, under conditions similar to these Contract Documents, or may have utility owners perform other work. When separate contracts are awarded for different portions of the Project or other construction or operations on the Site, the term "Contractor" in these Contract Documents shall mean the Contractor herein.

### 6.2 Mutual Responsibility

6.2.A. Contractor shall afford all other contractors, utility owners, and Owner (if Owner is performing work with its own forces), proper and safe access to the Site, and reasonable opportunity for the installation and storage of their materials. Contractor shall ensure that the execution of its Work properly connects and coordinates with others' work, and shall cooperate with them to facilitate the progress of the Work.

6.2.B. Contractor shall coordinate its Work with the work of other separate contractors, Owner, and utility owners. Contractor shall hold coordination meetings with other contractors, Owner and its representatives, and utility owners as required by Section 01315 (Project Meetings).

6.2.C. Unless otherwise provided in the Contract Documents, Contractor shall do all cutting, fitting, and patching of the Work that may be required to make its several parts come together properly and integrate with such other work. Contractor shall not endanger any work of other separate contractors, Owner, or utility owners by cutting, excavating, or otherwise altering their work and will only cut or alter their work with the written consent of Owner and the others whose work will be affected.

6.2.D. Contractor's duties and responsibilities under paragraph 6.2.A of this Document 00700 are for the benefit of Owner and also for the benefit of such other contractors and utility owners working at the Site to the extent that there are comparable provisions for the benefit of Contractor in the direct contracts between Owner and such other contractors and utility owners.

6.2.E. To the extent that any part of Contractor's Work is to interface with work performed or installed by other contractors or utility owners, Contractor shall inspect and measure the in-place work. Contractor shall promptly report to Owner in writing any defect in in-place work that will impede or increase the cost of Contractor's interface unless corrected. Owner will require the contractor responsible for the Defective Work to make corrections so as to conform to its contract requirements, or, if the defect is the result of an error or omission in the Contract Documents, issue a Change Order. If Contractor fails to measure, inspect and/or report to Owner in writing defects that are reasonably discoverable, Contractor shall bear all costs of accomplishing the interface acceptable to Owner. This provision shall be included in any and all other contracts or subcontracts for Work to be performed where such a conflict could exist.

**6.3 Owner Authority Over Coordination**

6.3.A. Owner will have authority over coordination of the activities of multiple contractors in cases where Owner performs Work with its own forces or contracts with others for the performance of other Work on the Project, or utilities Work on the Site. Owner may at any time and in its sole discretion, designate a person or entity other than Owner to have authority over the coordination of the activities among the various contractors. Owner's authority with respect to coordination of the activities of multiple contractors and utility owners shall not relieve Contractor of its obligation to other contractors and utility owners to coordinate its Work with other contractors and utility owners as specified in paragraph 6.2 of this Document 00700. Contractor shall promptly notify Owner in writing when another contractor on the Project fails to coordinate its work with the Work of Contract Documents.

6.3.B. Contractor shall suspend any part of the Work or carry on the same in such manner as directed by Owner when such suspension or prosecution is necessary to facilitate the work of other contractors or workers. No damages or claims by Contractor will be allowed if the suspension or Work change is due in whole or in part to Contractor's failure to perform its obligation to coordinate its Work with other contractors and utility owners. Damages or claims will be allowed only to the extent of fault by Owner if the suspension or Work change is due in whole or in part to another contractor's failure to coordinate its work with Contractor, other contractors, and utility owners.

Owner reserves the right to back charge Contractor for any damages or claims incurred by other contractors as a result of Contractor's failure to perform its obligations to coordinate with other contractors and utility owners. Owner may deposit the funds retained with a Court of competent jurisdiction pursuant to applicable interpleader procedures and Contractor releases Owner of further liability regarding such funds.

## 7. OWNER AND PAYMENT

### 7.1 Owner's Representative(s)

7.1.A. Owner's Representative(s) will have limited authority to act on behalf of Owner as set forth in the Contract Documents. Except as otherwise provided in these Contract Documents or subsequently identified in writing by Owner, Owner will issue all communications to Contractor through Owner's Representative, and Contractor shall issue all communications to Owner through Owner's Representative in a written document delivered to Owner. Should any direct communications between Contractor and Owner's consultants, architects, or engineers not identified in Article 2 of Document 00520 (Agreement) occur during field visits or by telephone, Contractor shall immediately confirm them in a written document copied to Owner.

### 7.2 Means And Methods Of Construction

7.2.A. Subject to those rights specifically reserved in the Contract Documents, Owner will not supervise, or direct, or have control over, or be responsible for, Contractor's means, methods, techniques, sequences or procedures of construction, or the safety precautions and programs incident thereto, or Contractor's failure to comply with laws and regulations applicable to the furnishing or performance of Work. Owner will not be responsible for Contractor's failure to perform or furnish the Work in accordance with Contract Documents.

### 7.3 Receipt And Processing Of Applications For Payment

7.3.A. As required by Section 01200 (Price and Payment Procedures), Contractor shall prepare the schedules, submit Applications for Payment and warrant title to all Work covered by each Application for Payment. Owner will review Contractor's Applications for Payment and make payment thereon, and Contractor shall make payments to Subcontractors, suppliers, and others, as required by Section 01200 (Price and Payment Procedures).

## 8. CONTROL OF THE WORK

### 8.1 Supervision Of Work By Contractor

8.1.A. Contractor shall supervise, inspect, and direct Work competently and efficiently, devoting the attention and applying such personal skills and expertise as may be required and necessary to perform Work in accordance with Contract Documents. Contractor shall be solely responsible for and have control and charge of construction means, methods, techniques, sequences and procedures, safety precautions, and programs in connection with the Work. Contractor shall be responsible to see that the completed Work complies accurately with Contract Documents.

8.1.B. Contractor shall keep on the Site at all times during Work progress a competent resident Superintendent, who shall not be replaced without Owner's express written consent. The Superintendent shall be Contractor's representative at the Site and shall

have complete authority to act on behalf of Contractor. All communications to and from the Superintendent shall be as binding as if given to or by Contractor.

**8.2 Observation Of Work By Owner**

8.2.A. Work shall be performed under Owner's general observation and administration. Contractor shall comply with Owner's directions and instructions in accordance with the terms of Contract Documents, but nothing contained in these General Conditions shall be taken to relieve Contractor of any obligations or liabilities under the Contract Documents. Owner's failure to review or, upon review, failure to object to any aspect of Work reviewed, shall not be deemed a waiver or approval of any non-conforming aspect of Work.

8.2.B. Owner may engage an independent consultant or engineer (collectively for purposes of this paragraph 8.2, "Engineer") to assist in administering the Work. If so engaged, Engineer will advise and consult with Owner, but will have authority to act on behalf of Owner only to extent provided in the Contract Documents or as set forth in writing by Owner. Engineer will not be responsible for and will not have control or charge of construction means, methods, techniques, sequences or procedures, or for safety precautions and programs in connection with Work. Engineer will not be responsible for or have control over the acts or omissions of Contractor, Subcontractors or their agents or employees, or any other persons performing Work.

8.2.C. Engineer may review Contractor's Submittals, such as Shop Drawings, Product Data, and Samples, but only for conformance with design concept of Work and with information given in the Contract Documents.

8.2.D. Engineer may visit the Site at intervals appropriate to stage of construction to become familiar generally with the progress and quality of Work and to determine in general if Work is proceeding in accordance with Contract Documents. Based on its observations, Engineer may recommend to Owner that it disapprove or reject Work that Engineer believes to be Defective or will not produce a complete Project that conforms to Contract Documents or will prejudice the integrity of the design concept of the completed Project as a functioning whole as indicated by Contract Documents. Owner will also have authority to require special inspection or testing of Work, whether or not the Work is fabricated, installed, or completed.

8.2.E. Engineer may conduct inspections to recommend to Owner the dates that Contractor has achieved Substantial Completion and Final Acceptance, and will receive and forward to Owner for review written warranties and related documents required by Contract Documents.

**8.3 Access To Work**

8.3.A. During performance of Work, Owner and its agents, consultants, and employees may at any time enter upon Work, shops, or studios where any part of the Work may be in preparation, or factories where any materials for use in Work are being or are to be manufactured, and Contractor shall provide proper and safe facilities for this purpose, and shall make arrangements with manufacturers to facilitate inspection of their processes and products to such extent as Owner's interests may require. Other contractors performing work for Owner may also enter upon Work for all purposes required by their respective contracts. Subject to the rights reserved in the Contract Documents, Contractor shall have sole care, custody, and control of the Site and its Work areas.

**8.4 Existing Utilities Shown or Indicated In Contract Documents**

8.4.A. Drawings or Specifications may indicate above- and below-grade structures, drainage lines, storm drains, sewers, water, gas, electrical, chemical, hot water, and other similar items and utilities, and additional information may be on file at the Common Ground Alliance, 811. Contractor shall locate these known existing installations before proceeding with trenching or other operations that may cause damage, shall maintain them in service where appropriate, and shall repair any damage to them caused by the Work, at no increase in Contract Sum. Additional utilities whose locations are unknown to Owner are suspected to exist. Contractor shall be alert to their existence; if they are encountered, Contractor shall immediately report to Owner for disposition of the same. In addition to reporting if any utility is damaged, Contractor shall take appropriate action as provided in this Document 00700. Additional compensation or extension of time on account of utilities not shown or otherwise brought to Contractor's attention, including reasonable action taken to protect or repair damage, shall be determined as provided in this Document 00700.

8.4.B. At no additional cost to Owner, Contractor shall incorporate into the Work main or trunk line utilities identified in the Contract Documents and other utilities or underground structures known or reasonably discernible and that will remain in service, including reasonable adjustments to the design location (including minor relocations) of the existing or new installations. Contractor shall take immediate action to restore any in-service installations damaged by Contractor's operations. Should Owner determine that Contractor has not responded in a timely manner or not diligently pursued completion of the Work, Owner may restore service and deduct the costs of such action by Owner from the amounts due under the Contract.

8.4.C. Consistent with Government Code Section 4215, as between Owner and Contractor, Owner will be responsible for the timely removal, relocation, or protection of existing main or trunk line utility facilities located on the Site only if such utilities are not identified in the Contract Documents or Document 00320 (Geotechnical Data and Existing Conditions). Owner will compensate for the cost of locating and repairing damage not due to Contractor's failure to exercise reasonable care, removing and relocating such main or trunk line utility facilities not indicated in the Contract Documents or Document 00320 (Geotechnical Data and Existing Conditions) with reasonable accuracy, and equipment on the Project necessarily idled during such Work.

8.4.D. Prior to performing Work at the Site, Contractor shall lay out the locations of known underground utilities that are to remain in service and other significant known underground installations. At no additional cost to Owner, prior to commencing other Work in proximity to such known underground utilities or installations that can be readily inferred from adjacent surface improvements, Contractor shall further locate, by carefully excavating with small equipment, potholing, and principally by hand, such utilities or installations that are to remain and that are subject to damage. This obligation applies to all utilities (including, but not limited to, those referenced in paragraph 8.4.C of this Document 00700).

8.4.E. Nothing in this Document 00700 shall be deemed to require Owner to indicate the presence of existing service laterals or appurtenances whenever the presence of such utilities on the Site can be inferred by Contractor from the presence of an underground transmission main or other visible facilities, such as buildings, new asphalt, meters,

and junction boxes, on or adjacent to the Site. Contractor shall immediately secure all available information and notify Owner and utility, in writing, of its discovery, while performing Work under the Contract Documents, of any utility facilities not identified in the Drawings and Specifications.

**8.5 Protection of Underground Facilities When Digging Trenches Or During Excavation**

8.5.A. Before commencing Work of digging trenches or excavation, Contractor shall review all information available regarding subsurface conditions, including but not limited to information supplied in Document 00320 (Geotechnical Data and Existing Conditions), and subject to the terms and conditions of these documents, Contractor shall also comply with Government Code Sections 4216 to 4216.9, and in particular Section 4216.2 which provides, in part:

> Except in an emergency, every person planning to conduct any excavation shall contact the appropriate regional notification center at least two working days, but no more than 14 calendar days, prior to commencing that excavation, if the excavation will be conducted in an area which is known, or reasonably should be known, to contain subsurface installations other than the underground facilities owned or operated by the excavator, and, if practical, the excavator shall delineate with white paint or other suitable markings the area to be excavated. The regional notification center shall provide an inquiry identification number to the person who contacts the center and shall notify any member, if known, who has a subsurface installation in the area of the proposed excavation.

8.5.B. Contractor shall contact Common Ground Alliance, telephone 811, and schedule the Work to allow ample time for the center to notify its members and, if necessary, for any member to field locate and mark its facilities. Contractor is charged with knowledge of all subsurface conditions reflected in 811 records. Prior to commencing excavation or trenching Work, Contractor shall provide Owner with copies of all 811 records secured by Contractor. Contractor shall advise Owner of any conflict between information provided in Document 00320 (Geotechnical Data and Existing Conditions), the Drawings and that provided by 811 records. Contractor's excavation shall be subject to and comply with the Contract Documents, including without limitation paragraphs 2.1 and 8.4 of this Document 00700.

8.5.C. If an Underground Facility is uncovered or revealed at or contiguous to the Site which was not shown or indicated in the materials supplied by Owner or in information on file at 811 or is otherwise reasonably available to Contractor, then Contractor shall, promptly after becoming aware thereof and before further disturbing conditions affected thereby (and in no event later than seven Days), and prior to performing any Work in connection therewith (except in an emergency as required by Article 16 of this Document 00700), identify the owner of such Underground Facility and give written notice to that owner and to Owner. During such time, Contractor shall be responsible for the safety and protection of such Underground Facility.

8.5.D. Contractor shall be allowed an increase in the Contract Sum or an extension of the Contract Time, or both, to the extent that they are attributable to the existence of any Underground Facility that is owned and was built by Owner only where the Underground Facility:

1. Was not shown or indicated in the Contract Documents or in the information supplied pursuant to Document 00320 (Geotechnical Data and Existing Conditions) or in information on file at 811; and
2. Contractor did not know of it; and
3. Contractor could not reasonably have been expected to be aware of it or to have anticipated it from the information available. (For example, if surface conditions such as pavement repairs, valve covers, or other markings, indicate the presence of an Underground Facility, then an increase in the Contract Sum or an extension of the Contract Time will not be due, even if the Underground Facility was not indicated in the Contract Documents, in the information supplied to Contractor pursuant to Document 00320 [Geotechnical Data and Existing Conditions], in information on file at 811, or otherwise reasonably available to Contractor.)

8.5.E. Contractor shall bear the risk that Underground Facilities not owned or built by Owner may differ in nature or locations shown in information made available by Owner pursuant to Document 00320 (Geotechnical Data and Existing Conditions), in information on file at 811, or otherwise reasonably available to Contractor. Underground Facilities are inherent in construction involving digging of trenches or other excavations and Contractor is to apply its skill and industry to verify the information available.

8.5.F. The cost of all of the following will be included in the Contract Sum and Contractor shall have full responsibility for (a) reviewing and checking all available information and data including, but not limited to, Document 00320 (Geotechnical Data and Existing Conditions) and information on file at 811; (b) locating all Underground Facilities shown or indicated in the Contract Documents, available information, or indicated by visual observation including, but not limited to, and by way of example only, engaging qualified locating services and all necessary backhoeing and potholing; (c) coordinating the Work with the owners of such Underground Facilities during construction; and (d) the safety and protection of all such Underground Facilities and repairing any damage thereto resulting from the Work.

## 9. WARRANTY, GUARANTY, AND INSPECTION OF WORK

### 9.1 Warranty And Guaranty

9.1.A. General Representations and Warranties: Contractor represents and warrants that it is and will be at all times fully qualified and capable of performing every Phase of the Work and to complete Work in accordance with the terms of Contract Documents. Contractor warrants that all construction services shall be performed in accordance with generally accepted professional standards of good and sound construction practices and all requirements of Contract Documents. Contractor warrants that Work, including but not limited to each item of materials and equipment incorporated therein, shall be new, of suitable grade of its respective kind for its intended use, and free from defects in design, engineering, materials, construction and workmanship. Contractor warrants that Work shall conform in all respects with all applicable requirements of federal, state and local laws, applicable construction codes and standards, licenses, and permits, Drawings and Specifications and all descriptions set forth therein, and all other requirements of Contract Documents. Contractor shall not be responsible, however, for the negligence of others in the specification of specific

equipment, materials, design parameters and means or methods of construction where that is specifically shown and expressly required by Contract Documents.

9.1.B. Extended Warranties and Guaranties: For any warranty or guaranty provided by the supplier or manufacturer of any equipment or materials used in the Project exceeding the term of Contractor's Guaranty pursuant to Document 00630 (Guaranty) ("Extended Warranty"), Contractor shall assign such warranties and guaranties to Owner and supply Owner with all warranty and guaranty documents relative thereto.

9.1.C. Environmental and Toxics Warranty: The covenants, warranties and representations contained in this paragraph 9.1.B. are effective continuously during Contractor's Work on the Project and following cessation of labor for any reason including, but not limited to, Project completion. Except as expressly shown in the Contract Documents, Contractor covenants, warrants and represents to Owner that:

1. To Contractor's knowledge after due inquiry, no lead or Asbestos-containing materials were installed or discovered in the Project at any time during Contractor's construction thereof. If any lead or Asbestos-containing materials were discovered, Contractor made immediate written disclosure to Owner.
2. To Contractor's knowledge after due inquiry, no electrical transformers, light fixtures with ballasts or other equipment containing PCBs were installed or discovered on the Project at any time during Contractor's construction thereof. If any such materials were discovered, Contractor made immediate written disclosure to Owner.
3. To Contractor's knowledge after due inquiry, no storage tanks for gasoline or any other toxic substance were installed or discovered on the Project at any time during Contractor's construction thereof. If any such materials were discovered, Contractor made immediate written disclosure to Owner.
4. Contractor's operations concerning the Project are and were not in violation of any applicable environmental federal, state, or local statute, law or regulation dealing with hazardous materials substances or toxic substances and no notice from any governmental body has been served upon Contractor claiming any violation of any such law, ordinance, code or regulation, or requiring or calling attention to the need for any Work, repairs, construction, alteration, or installation on or in connection with the Project in order to comply with any such laws, ordinances, codes, or regulations, with which Contractor has not complied. If there are any such notices with which Contractor has complied, Contractor shall provide Owner with copies thereof.

**9.2 Inspection Of Work**

9.2.A. All materials, equipment, and workmanship used in Work shall be subject to inspection and testing at all times during construction and/or manufacture in accordance with the terms of Contract Documents. Work and materials, and manufacture and preparation of materials, from beginning of construction until Final Completion and acceptance of Work, shall be subject to inspection and rejection by Owner, its agents, representatives or independent contractors retained by Owner to perform inspection services, or governmental agencies with jurisdictional interests. Contractor shall provide them proper and safe conditions for such access and advise them of Contractor's Site safety procedures and program so that they may comply therewith as applicable. Upon request or where specified, Owner shall be afforded access for inspection at the source of supply, manufacture or assembly of any item of

material or equipment, with reasonable accommodations supplied for making such inspections.

9.2.B. Contractor shall furnish, in such quantities and sizes as may be required for proper examination and tests, Samples or test specimens of all materials to be used or offered for use in connection with Work. Contractor shall prepare Samples or test specimens at its expense and furnish them to Owner. Contractor shall submit all Samples in ample time to enable Owner to make any necessary tests, examinations, or analyses before the time it is desired to incorporate the material into the Work.

9.2.C. Contractor shall give Owner timely notice of readiness of Work for all required inspections, tests or approvals, and shall cooperate with inspection and testing personnel to facilitate required inspections or tests.

9.2.D. If applicable laws or regulations of any public body having jurisdiction require any Work (or part thereof) specifically to be inspected, tested or approved by an employee or other representative of such public body, Contractor shall assume full responsibility for arranging and obtaining such inspections, tests or approvals, and furnish Owner with the required certificates of inspection, or approval. Owner will pay the cost of initial testing and Contractor shall pay all costs in connection with any follow-up or additional testing. Contractor shall also be responsible for arranging and obtaining and shall pay all costs in connection with any inspections, tests or approvals required for the acceptance of materials or equipment to be incorporated in the Work, or of materials, mix designs, or equipment submitted for approval prior to Contractor's purchase thereof for incorporation in the Work.

9.2.E. If Contractor covers any Work, or the work of others, prior to any required inspection, test or approval without written approval of Owner, Contractor shall uncover the Work at Owner's request. Contractor shall bear the expense of uncovering Work and replacing Work.

9.2.F. In any case where Contractor covers Work contrary to Owner's request, Contractor shall uncover Work for Owner's observation or inspection at Owner's request. Contractor shall bear the cost of uncovering Work.

9.2.G. Whenever required by Owner, Contractor shall furnish tools, labor and materials necessary to make examination of Work that may be completed or in progress, even to extent of uncovering or taking down portions of finished Work. Should Work be found unsatisfactory, cost of making examination and of reconstruction shall be borne by Contractor. If Work is found to be satisfactory, Owner, in manner herein prescribed for paying for alterations, Modifications, and extra Work, except as otherwise herein specified, will pay for examination.

9.2.H. Inspection of the Work by or on behalf of Owner, or Owner's failure to do so, shall not under any circumstances be deemed a waiver or approval of any non-conforming aspect of the Work. Contractor shall have an absolute duty, in the absence of a written Change Order signed by Owner, to perform Work in conformance with the Contract Documents and to correct Defective Work immediately upon Contractor's knowledge.

9.2.I. Any inspection, evaluation, or test performed by or on behalf of Owner relating to the Work is solely for the benefit of Owner, and shall not be relied upon by Contractor. Contractor shall not be relieved of the obligation to perform Work in accordance with the Contract Documents, nor relieved of any guaranty, warranty, or other obligation, as a result of any inspections, evaluations, or tests performed by Owner, whether or

not such inspections, evaluations, or tests are permitted or required under the Contract Documents. Contractor shall be solely responsible for testing and inspecting Work already performed to determine whether such Work is in proper condition to receive later Work.

**9.3 Correction Of Defective Work**

9.3.A. If Contractor fails to supply sufficient skilled workers, suitable materials or equipment, or to furnish or perform the Work in such a way that the completed Work will conform to Contract Documents, Owner may order Contractor to replace any such Defective Work, or stop any portion of Work to permit Owner (at Contractor's expense) to replace such Defective Work. These Owner rights are entirely discretionary on the part of the Owner, and shall not give rise to any duty on the part of Owner to exercise the rights for the benefit of Contractor or any other party.

9.3.B. Owner may direct Contractor to correct any Defective Work or remove it from the Site and replace it with Work that is not Defective and satisfactorily correct or remove and replace any damage to other Work or the work of others resulting from the correction or removal. Contractor shall be responsible for any and all claims, costs, losses, and damages caused by or resulting from such correction or removal. A Change Order will be issued incorporating the necessary revisions in the Contract Documents with respect to the Work and the Contract Sum. If the parties are unable to agree to the amount of an appropriate decrease in the Contract Sum, Owner may decide the proper amount or, in its discretion may elect to leave the Contract Sum unchanged and deduct from moneys due Contractor, all such claims, costs, losses, and damages caused by or resulting from the correction or removal. If Contractor disagrees with Owner's calculations, it may make a claim as provided in Article 12 of this Document 00700. Owner's rights under this paragraph 9.3.B shall be in addition to any other rights it may have under the Contract Documents or by law.

9.3.C. Correction Period: If within the Guaranty Period, as defined by Document 00630 (Guaranty), any Work (completed or incomplete) is found to be Defective, Contractor shall promptly, without cost to Owner and in accordance with Owner's written instructions, correct such Defective Work. Contractor shall remove any Defective Work rejected by Owner and replace it with Work that is not Defective, and satisfactorily correct or remove and replace any damage to other Work or the work of others resulting therefrom. If Contractor fails to promptly comply with the terms of such instructions, or in an emergency where delay would cause serious risk of loss or damage, Owner may have the Defective Work corrected or the rejected Work removed and replaced. Contractor shall pay for all claims, costs, losses, and damages caused by or resulting from such removal and replacement. Where Contractor fails to correct Defective Work, or defects are discovered outside the correction period, Owner shall have all rights and remedies granted by law.

9.3.D. In special circumstances where a part of the Work is occupied or a particular item of equipment is placed in continuous service before Final Acceptance of all the Work, the correction period for that part of Work or that item may start to run from an earlier date if so provided by Change Order.

9.3.E. Where Defective Work or rejected Work (and damage to other Work resulting therefrom) has been corrected, removed, or replaced under this provision after the commencement of the correction period, the correction period hereunder with respect

to such Work shall be extended for an additional period of one year, or such longer period of time as may be prescribed by laws, regulations, or by the terms of the Contract Documents, after such correction or removal and replacement has been satisfactorily completed.

**9.4 Acceptance And Correction Of Defective Work By Owner**

9.4.A. Owner may accept Defective Work. Contractor shall pay all claims, costs, losses, and damages attributable to Owner's evaluation of and determination to accept such Defective Work. If Owner accepts any Defective Work prior to final payment, a Change Order will be issued incorporating the necessary revisions in the Contract Documents with respect to the Work and the Contract Sum. If the parties are unable to agree to the amount of an appropriate decrease in the Contract Sum, Owner may deduct from moneys due Contractor, all claims, costs, losses, damages, expenses, and liabilities attributable to the Defective Work. If Contractor disagrees with Owner's calculations, Contractor may make a claim as provided in Article 12 of this Document 00700. If Owner accepts any Defective Work after final payment, Contractor shall pay to Owner, an appropriate amount as determined by Owner.

9.4.B. Owner may correct and remedy deficiency if, after five Days' written notice to Contractor, Contractor fails to correct Defective Work or to remove and replace rejected Work in accordance with paragraph 9.3.B of this Document 00700; or provide a plan for correction of Defective Work acceptable to Owner; or perform Work in accordance with Contract Documents. In connection with such corrective and remedial action, Owner may exclude Contractor from all or part of the Site; take possession of all or part of Work and suspend Contractor's Work related thereto; take possession of all or part of Contractor's tools, appliances, construction equipment, and machinery at the Site; and incorporate in Work any materials and equipment stored at the Site or for which Owner has paid Contractor but which are stored elsewhere. Contractor shall allow Owner, its representatives, agents, employees, and other contractors and Engineer's consultants access to the Site to enable Owner to exercise the rights and remedies under this paragraph 9.4.B. Contractor shall be responsible for all claims, costs, losses, damages, expenses and liabilities incurred or sustained by Owner in exercising such rights and remedies. A Change Order will be issued incorporating the necessary revisions in the Contract Documents with respect to Work and the Contract Sum. If the parties are unable to agree to the amount of an appropriate decrease in the Contract Sum, Owner may deduct from moneys due Contractor, all claims, costs, losses and damages caused by or resulting from the correction or removal. If Contractor disagrees with Owner's calculations, Contractor may make a claim as provided in Article 12 of this Document 00700.

**9.5 Rights Upon Inspection, Correction, Or Acceptance**

9.5.A. Contractor shall not be allowed an extension of Contract Time because of any delay in the performance of Work attributable to the exercise by Owner of its rights and remedies under this Article 9. Where Owner exercises its rights under this Article 9, it retains and may still exercise all other rights it has by law or under the Contract Documents including, but not limited to, the right to terminate Contractor's right to proceed with the Work under the Contract Documents for cause and/or make a claim or back charge where a Change Order cannot be agreed upon.

9.5.B. Inspection by Owner or its authorized agents or representatives shall not relieve Contractor of its obligation to have furnished material and workmanship in accordance with Contract Documents. Payment for Work completed through periodic progress payments, Final Payment, or otherwise shall not operate to waive Owner's right to require full compliance with Contract Documents and shall in no way be deemed as acceptance of any Defective Work paid therefor. Contractor's obligation to complete the Work in accordance with Contract Documents shall be absolute, unless Owner agrees otherwise in writing.

9.5.C. Neither acceptance of the whole or any part of Work by Owner nor any verbal statements on behalf of Owner or its authorized agents or representatives shall operate as a waiver or Modification of any provision of the Contract Documents, or of any power reserved to Owner herein nor any right to damages provided in the Contract Documents.

**9.6 Proof Of Compliance Of Contract Provisions**

9.6.A. In order that Owner may determine whether Contractor has complied or is complying with requirements of Contract Documents not readily enforceable through inspection and tests of Work and materials, Contractor shall at any time, when requested, submit to Owner properly authenticated documents or other satisfactory proofs of compliance with all applicable requirements.

## 10. CONTRACTOR'S ORGANIZATION AND EQUIPMENT

**10.1 Contractor's Legal Address**

10.1.A. Address and facsimile number given in Contractor's Bid are hereby designated as Contractor's legal address and facsimile number. Contractor may change its legal address and facsimile number by notice in writing, delivered to Owner, which in conspicuous language advises Owner of a change in legal address or facsimile number, and which Owner accepts in writing. Delivery to Contractor's legal address or depositing in any post office or post office box regularly maintained by the United States Postal Service, in a wrapper with postage affixed, directed to Contractor at legal address, or of any drawings, notice, letter or other communication, shall be deemed legal and sufficient service thereof upon Contractor. Facsimile to Contractor's designated facsimile number of any letter, memorandum, or other communication on standard or legal sized paper, with proof of facsimile transmission, shall be deemed legal and sufficient service thereof upon Contractor.

**10.2 Contractor's Office At The Work Site**

10.2.A. Contractor shall maintain an office at the Site, which office shall be headquarters of a Contractor representative authorized to transmit to and receive from Owner, communications, instructions, or Drawings. Communications, instructions, or Drawings given to Contractor's representative or delivered at the Site office in representative's absence shall be deemed to have been given to Contractor.

**10.3 Contractor's Superintendents Or Forepersons**

10.3.A. Contractor shall at all times be represented on Site by one or more superintendents or forepersons authorized and competent to receive and carry out any instructions that Owner may give, and shall be liable for faithful observance of instructions delivered to Contractor or to authorized representative or representatives on Site.

**10.4 Proficiency In English**

10.4.A. Supervisors, security guards, safety personnel, and employees who have unescorted access to the Site shall possess proficiency in the English language in order to understand, receive, and carry out oral and written communications or instructions relating to their job functions, including safety and security requirements.

**10.5 Contractor's And Subcontractors' Employees**

10.5.A. Contractor shall employ, and shall permit its Subcontractors to employ, only competent and skillful personnel to do Work. If Owner notifies Contractor that any of its employees, or any of its Subcontractors' employees on Work is incompetent, unfaithful, disorderly, or profane, or fails to observe customary standards of conduct, or refuses to carry out any provision of the Contract Documents, or uses threatening or abusive language to any person on Work representing Owner, or violates sanitary rules, or is otherwise unsatisfactory, and if Owner requests that such person be discharged from Work, then Contractor or its Subcontractor shall immediately discharge such person from Work and the discharged person shall not be re-employed on the Work except with consent of Owner.

**10.6 Contractor To Supply Sufficient Workers And Materials**

10.6.A. Unless otherwise required by Owner under the terms of Contract Documents, Contractor shall at all times keep on the Site materials and employ qualified workers sufficient to prosecute Work at a rate and in a sequence and manner necessary to complete Work within the Contract Time. This obligation shall remain in full force and effect notwithstanding disputes or claims of any type.

10.6.B. At any time during progress of Work should Contractor directly or indirectly (through Subcontractors) refuse, neglect, or be unable to supply sufficient materials or employ qualified workers to prosecute the Work as required, then Owner may require Contractor to accelerate the Work and/or furnish additional qualified workers or materials as Owner may consider necessary, at no cost to Owner. If Contractor does not comply with the notice within three Business Days of date of service thereof, Owner shall have the right (but not a duty) to provide materials and qualified workers to finish the Work or any affected portion of Work, as Owner may elect. Owner may, at its discretion, exclude Contractor from the Site, or portions of the Site or separate Work elements during the time period that Owner exercises this right. Owner will deduct from moneys due or which may thereafter become due under the Contract Documents, the sums necessary to meet expenses thereby incurred and paid to persons supplying materials and doing Work. Owner will deduct from funds or appropriations set aside for purposes of Contract Documents the amount of such payments and charge them to Contractor as if paid to Contractor. Contractor shall remain liable for resulting delay, including liquidated damages and indemnification of Owner from claims of others.

10.6.C. Exercise by Owner of the rights conferred upon Owner in paragraph 10.6.B of this Document 00700, is entirely discretionary on the part of Owner. Owner shall have no duty or obligation to exercise the rights referred to in paragraph 10.6.B of this Document 00700 and its failure to exercise such rights shall not be deemed an approval of existing Work progress or a waiver or limitation of Owner's right to exercise such rights in other concurrent or future similar circumstances. The rights conferred upon

Owner under paragraph 10.6.B of this Document 00700 are cumulative to Owner's other rights under any provision of the Contract Documents.

**10.7 Contractor To List Trades Working**

10.7.A. Contractor shall list the trades working on the Site and their scheduled activities on a daily basis, and provide a copy of that list to Owner.

**10.8 Contractor's Use Of The Site**

10.8.A. Contractor shall not make any arrangements with any person to permit occupancy or use of any land, structure, or building within the limits of the Work, for any purpose whatsoever, either with or without compensation, in conflict with any agreement between Owner and any owner, former owner or tenant of such land, structure, or buildings. Contractor may not occupy Owner-owned property outside the limit of the Work as indicated on the Drawings unless it obtains prior approval from Owner.

**10.9 Apprenticeship Program**

10.9.A. Contractor and Subcontractors shall comply with the requirements of California Labor Code Sections 1776, 1777.5, and 1777.6 concerning the employment of apprentices by Contractor or Subcontractors. Willful failure to comply may result in penalties, including loss of the right to Bid on or receive public works contracts.

10.9.B. Section 1777.5, as amended, requires a Contractor or Subcontractor employing tradespersons in any apprenticeable occupation to apply to the joint apprenticeship committee nearest the site of a public works project and which administers the apprenticeship program in that trade for a certification of approval. The certificate shall also fix the ratio of apprentices to journeypersons that will be used in performance of the Contract. The ratio of work performed by apprentices to journeypersons in such cases shall not be less than one *hour* of apprentice's work for every five *hours* of labor performed by journeypersons (the minimum ratio for the land surveyor classification shall not be less than one apprentice for each five journeypersons), except:

1. When unemployment for the previous three-month period in the area exceeds an average of 15 percent;
2. When the number of apprentices in training in the area exceeds a ratio of one to five;
3. When a trade can show that it is replacing at least 1/30 of its membership through apprenticeship training on an annual basis state-wide or locally; or
4. Assignment of an apprentice to any work performed under a public works contract would create a condition which would jeopardize his or her life or the life, safety, or property of fellow employees or the public at large or if the specific task to which the apprentice is to be assigned is of such a nature that training cannot be provided by a journeyperson.

10.9.C. Contractor is required to make contributions to funds established for administration of apprenticeship programs if Contractor employs registered apprentices or journeypersons in any apprenticeable trade on such contracts and if other contractors on the public works site are making such contributions.

10.9.D. Information relative to apprenticeship standards, wage schedules, and other requirements may be obtained from the Director of the California Department of

Industrial Relations, or from the Division of Apprenticeship Standards and its branch offices.

## 11. PROSECUTION AND PROGRESS OF THE WORK

### 11.1 Schedules And Examinations Of Contract Documents

11.1.A. Contractor shall submit schedules, reports, and Submittals in the appropriate quantity and within the required time, arrange conferences and meetings, and proceed with the Work in accordance with Contract Documents, including Sections 01315 (Project Meetings), 01320 (Progress Schedules and Reports), and 01330 (Submittal Procedures).

11.1.B. Contractor shall submit to Owner for review and discussion at the initial Schedule Review Meeting described in Section 01315 (Project Meetings):

1. Progress Schedules and Reports as required by Sections 01320 (Progress Schedules and Reports) and 01330 (Submittal Procedures). Contractor shall utilize Progress Schedule in planning, scheduling, coordinating, performing, and controlling Work (including all activities of Subcontractors, assigned contractors, equipment vendors, and suppliers). Contractor shall update Progress Schedule on a monthly basis to depict accurately the actual progress of Work and for evaluating and preparing Contractor's monthly progress payments. Contractor's failure to submit and maintain an acceptable Progress Schedule may, in Owner's discretion, and without limiting the materiality of Contractor's other obligations under the Contract Documents, constitute grounds to declare Contractor in material breach of the Contract Documents.
2. Within 21 Days after issuance of Notice to Proceed, a preliminary schedule of Submittals that shall list each required Submittal and the times for submitting, reviewing and processing such Submittal, as required by Section 01330 (Submittal Procedures). If no such schedule is agreed upon, then all Submittals shall be completed and submitted within 35 Days after the Notice of Award.
3. Within 21 Days after issuance of Notice to Proceed, a preliminary Schedule of Values for all the Work which shall include quantities and prices of items aggregating the Contract Sum and shall subdivide each Schedule of Values into component activities in sufficient detail to serve as the basis for progress payments during construction. Such Schedule of Values shall include an appropriate amount of overhead and profit applicable to each item of Work, a line item for Project Record Documents, and a line item for Project scheduling, and shall conform to Section 01200 (Price and Payment Procedures).

11.1.C. Unless otherwise provided in the Contract Documents, at least 15 Days before submission of the first Application for Payment, a conference attended by Contractor, Owner, and others as appropriate, will be held to review for acceptability the schedules submitted in accordance with paragraph 11.1.B of this Document 00700. Contractor shall have an additional seven Days to make corrections and adjustments and to complete and resubmit the schedules. Schedules shall be updated and completed as required by Sections 01200 (Price and Payment Procedures), 01320 (Progress Schedules and Reports) and 01330 (Submittal Procedures). No progress payment shall be due or owing to Contractor until the schedules are submitted to and acceptable to Owner or Engineer or both as meeting the requirements of the Contract Documents, including Sections 01200 (Price and Payment Procedures), 01320 (Progress Schedules and Reports) and 01330 (Submittal Procedures). Owner's acceptance of

Contractor's schedules will not create any duty of care or impose on Owner any responsibility for the sequencing, scheduling, or progress of Work, nor will it interfere with or relieve Contractor from Contractor's full responsibility therefor.

11.1.D. Before commencing any portion of Work, Contractor shall inform Owner in writing as to time and place at which Contractor wishes to commence Work, and nature of Work to be done, in order that proper provision for inspection of Work may occur, and to assure measurements necessary for record and payment. Information shall be given to Owner a reasonable time in advance of time at which Contractor proposes to begin Work, so that Owner may complete necessary preliminary work without inconvenience or delay to Contractor.

11.1.E. Contractor shall submit Submittals to Owner (or Engineer if Owner so designates) for review in strict accordance with Section 01330 (Submittal Procedures). Submission of a Submittal shall constitute Contractor's representation that all requirements of Section 01330 (Submittal Procedures) have been complied with. All Submittals will be identified as Owner may require and in the number of copies specified in Section 01330 (Submittal Procedures).

11.1.F. Contractor shall not perform Work that requires submission of a Submittal prior to submission and favorable review of the Submittal. Where a Submittal is required by Contract Documents or the final Schedule of Submittals accepted by Owner, any related Work performed prior to Owner's approval of the pertinent Submittal shall be at the sole expense, responsibility, and risk of Contractor.

**11.2 Cost Data**

11.2.A. Contractor shall maintain full and correct information as to the number of workers employed in connection with each subdivision of Work, the classification and rate of pay of each worker in the form of certified payrolls, the cost to Contractor of each class of materials, tools, and appliances used by Contractor in Work, and the amount of each class of materials used in each subdivision of Work. Contractor shall provide Owner with copies of certified payrolls every 2 weeks. If Contractor maintains or is capable of generating summaries or reports comparing actual Project costs with Bid estimates or budgets, Contractor shall provide Owner with a copy of such report upon Owner's request and whenever it is generated.

11.2.B. Contractor shall maintain daily job reports recording all significant activity on the job, including the number of workers on Site, Work activities, problems encountered, and delays. Contractor shall provide Owner with copies for each Day Contractor works on the Project, to be delivered to Owner either the same Day or the following morning before starting Work at the Site. Contractor shall take monthly progress photographs of all areas of the Work. Contractor shall maintain copies of all correspondence with Subcontractors and records of meetings with Subcontractors.

11.2.C. Owner shall have the right to audit and copy Contractor's books and records of any type, nature, or description relating to the Project (including but not limited to financial records reflecting in any way costs claimed on the Project), and to inspect the Site, including Contractor's trailer, or other job Site office, and this requirement shall be contained in the subcontracts of Subcontractors working on Site. By way of example, Owner shall have the right to inspect and obtain copies of all Contract Documents, planning and design documents, Bid proposal and negotiation documents (subject to Document 00670 [Escrow Bid Documents]), cost records and job cost variance reports,

design modification proposals, value engineering or other cost reduction proposals, revisions made to the original design, job Progress Reports, photographs, and as-built drawings maintained by Contractor. Owner and any other applicable governmental entity shall have the right to inspect all information and documents maintained under this paragraph 11.2 at any time during the Project and for a period of five years following Substantial Completion. This right of inspection shall not relieve Contractor of its duties and obligations under the Contract Documents. This right of inspection shall be specifically enforceable in a court of law, either independently or in conjunction with enforcement of any other rights in the Contract Documents.

11.2.D. Contractor shall maintain in a safe place at the Site one record copy of all Drawings, Specifications, Addenda, Contract Modifications, Change Orders, Work Directives, Force Account orders, and written interpretations and clarifications in good order and annotated to show all changes made during construction. These Project Record Documents, together with all approved Samples and a counterpart of all approved Shop Drawings, shall be maintained and available to Owner for reference. Upon completion of the Work, Contractor shall deliver to Owner, the Project Record Documents.

## 12. CLAIMS BY CONTRACTOR

### 12.1 General

12.1.A. Contract Interpretation Disputes: Should it appear to Contractor that Work to be performed or any of the matters relative to Contract Documents (including without limitation Drawings or Specifications) are not satisfactorily detailed or explained therein, or should any questions arise as to the meaning or intent of Contract Documents (including without limitation Drawings or Specifications), Contractor shall give written notice to Owner. Contractor shall bear all costs incurred in giving notice. Owner will render a determination regarding the issue, which shall be final. If Contractor disagrees with Owner's decision, Contractor's sole and exclusive remedy is to file a claim in accordance with this Article 12. Contractor shall diligently prosecute the Disputed Work (as defined below) to Final Completion pending resolution of any claim.

12.1.B. Work Disputes: Contractor shall give written notice to Owner of any dispute arising under the Contract Documents respecting the true value of any Work performed, the implementation of Work required by Contract Documents, any Work omitted, any extra Work that Contractor may be required to perform or time extensions, respecting the size of any payment to Contractor during the performance of Contract Documents, or of compliance with Contract Documents procedures. Owner will render a determination regarding the issue, which shall be final. If Contractor disagrees with Owner's decision, Contractor's sole and exclusive remedy is to file a claim in accordance with this Article 12. Pending the resolution of any claim, Contractor shall diligently prosecute the Disputed Work to Final Completion.

12.1.C. The claim notice and documentation procedure described in this Article 12 shall constitute a mandatory non-judicial settlement procedure and shall apply to all claims and disputes arising under the Contract Documents, including without limitation any claim or dispute by any Subcontractor or material supplier. All Subcontractor and supplier claims of any type shall be brought only through Contractor as provided in

this Article 12. Under no circumstances shall any Subcontractor or supplier make any direct claim against Owner.

12.1.D. "Claim" means a written demand or written assertion by Contractor seeking, as a matter of right, the payment of money, the adjustment or interpretation of Contract Documents terms, or other relief arising under or relating to Contract Documents. In order to qualify as a "claim," the written demand must state that it is a claim submitted under this Article 12.

12.1.E. A voucher, invoice, proposed change, Application for Payment, or other routine or authorized form of request for payment is not a claim under the Contract Documents. If such request is disputed as to liability or amount, then the disputed portion of the submission may be converted to a claim under the Contract Documents by submitting a separate claim in compliance with claim submission requirements.

12.1.F. The provisions of this Article 12 survive termination, breach, or completion of the Contract Documents. Contractor shall bear all costs incurred in the preparation and submission of a claim.

**12.2 Procedure**

12.2.A. Should any clarification, determination, action or inaction by Owner or Engineer, Work, or any other event, in the opinion of Contractor, exceed the requirements of or not comply with Contract Documents, or otherwise result in Contractor seeking additional compensation in time or money for any reason (collectively "Disputed Work"), then Contractor and Owner will make good faith attempts to resolve informally any and all such issues, claims and/or disputes. Before commencing the Disputed Work, or within seven Days after Contractor's first knowledge of the Disputed Work, whichever is earlier, Contractor shall file a written notice and cost proposal for the Disputed Work with Owner stating clearly and in detail its objection and reasons for contending the Work or interpretation is outside the requirements of Contract Documents. If a written notice and cost proposal for Disputed Work is not issued within this time period, or if Contractor proceeds with the Disputed Work without first having given the notice required by this paragraph 12.2.A, Contractor shall waive its rights to further claim on the specific issue.

12.2.B. Owner will review Contractor's timely notice and cost proposal for Disputed Work and provide a decision. If, after receiving the decision, Contractor disagrees with it or still considers the Work required of it to be outside of the requirements of Contract Documents, it shall so notify Owner, in writing, within seven Days after receiving the decision, by submitting a notice of potential claim, stating that a formal claim will be issued. Within 30 Days of receiving the decision, Contractor shall submit its claim in the form specified herein and all arguments, justification, cost or estimates, schedule analysis, and detailed documentation supporting its position. Contractor's failure to furnish notification within seven Days and all justifying documentation within 30 Days will result in Contractor waiving its right to the subject claim. If Disputed Work persists longer than 30 Days, then Contractor shall, every 30 Days until the Disputed Work ceases, submit to Owner a document titled "Claim Update" that shall update and quantify all elements of the claim as completely as possible. Contractor's failure to submit a Claim Update or to quantify costs every 30 Days shall result in waiver of the claim for that 30-Day period. Claims or Claim Updates stating that damages, total damages (direct and indirect), schedule input and/or any time extension will be

determined at a later date shall not comply with this paragraph 12.2.B and shall result in Contractor waiving its claim(s).

12.2.C. Upon receipt of Contractor's formal claim including all arguments, justifications, cost or estimates, schedule analysis, and all other documentation supporting its position as required herein, Owner or its designee will review the issue and render a final determination. Owner may in its discretion first conduct an administrative hearing on the claim, in which event Contractor shall appear and provide further substantiating information and documents if requested by Owner.

12.2.D. Claims shall be calculated in the same manner as Change Orders per Section 01250 (Modification Procedures). EXCEPT WHERE PROVIDED BY LAW, OR ELSEWHERE IN THESE CONTRACT DOCUMENTS (IF APPLICABLE), OWNER SHALL NOT BE LIABLE FOR SPECIAL OR CONSEQUENTIAL DAMAGES, AND CONTRACTOR SHALL NOT INCLUDE THEM IN ITS CLAIMS. CONTRACTOR SHALL BE LIMITED IN ITS RECOVERY ON CLAIMS TO THE CHANGE ORDER CALCULATIONS SET FORTH IN SECTION 01250 (MODIFICATION PROCEDURES).

**12.3 Claim Format**

12.3.A. Contractor shall submit the claim justification in the following format:

1. Cover letter and certification under penalty of perjury of the accuracy of the claim;
2. Summary of claim, including underlying facts, entitlement, schedule analysis, quantum calculations, Contract provisions supporting relief;
3. List of documents relating to claim including Specifications, Drawings, clarifications/requests for information, schedules, notices of delay, and any others;
4. Chronology of events and correspondence;
5. Analysis of claim merit;
6. Analysis of claim cost; and
7. Attach supporting documents referenced in paragraph 12.3.A.3.

**12.4 Mediation**

12.4.A. All Contractor claims not subject to the claim resolution procedures set forth in Section 01410 (Regulatory Requirements) shall, as a condition precedent to litigation (or if otherwise permitted by the Contract Documents, arbitration) thereon, first be mediated. Mediation shall be non-binding and utilize the services of a mediator mutually acceptable to the parties and, if the parties cannot agree, a mediator selected by the American Arbitration Association from its panel of approved mediators trained in construction industry mediation. Except as provided below in Section 12.7, all statutes of limitation shall be tolled from the date of the demand for mediation until a date two weeks following the mediation's conclusion. All unresolved Contractor claims shall be submitted to the same mediator. The cost of mediation shall be equally shared.

**12.5 Subcontractor Claims**

12.5.A. Contractor shall present as its claims all Subcontractor, sub-Subcontractor and supplier claims of any type, and prove them under the terms of the Contract Documents. Owner shall not be directly liable to any Subcontractor, any supplier, or any other person or organization, or to any surety for or employee or agent of any of them, for damages or extra costs of any type arising out of or resulting from the Project.

### 12.6 Exclusive Remedy

12.6.A. Contractor's performance of its duties and obligations specified in this Article 12 and administration of a claim as provided in this Article 12 is Contractor's sole and exclusive remedy for disputes of all types pertaining to the payment of money, extension of time, the adjustment or interpretation of the Contract Documents terms or other contractual or tort relief arising from Contract Documents. This exclusive remedy and the limitation of liability (expressed herein and elsewhere throughout the Contract Documents) apply notwithstanding the completion, termination, suspension, cancellation, breach, or rescission of the Work or Contract Documents, negligence or strict liability by Owner, its representatives, consultants, or agents, or the transfer of Work or the Project to Owner for any reason whatsoever. Contractor waives and covenants not to raise any claims of waiver, estoppel, release, bar, or any other type of excuse for non-compliance with these Article 12 claim submission, administration, and mediation requirements. Compliance with the claim submission, administration, and mediation procedures described in this Article 12 is a condition precedent to the right to file a Government Code Claim, commence litigation or commence any other legal action. Claim(s) or issue(s) not raised in a timely protest and timely claim submitted under this Article 12 may not be asserted in any subsequent Government Code Claim, litigation or legal action. Owner shall not be deemed to waive any provision under this Article 12, if at Owner's sole discretion, a claim is administered in a manner not in accord with this Article 12.

### 12.7 Final Claim Disposition

12.7.A. If the Contractor's claims submitted in accordance with this Article 12 at Project completion total $375,000 or less, then claims resolution shall proceed in the manner prescribed by Article 1.5, Chapter 1, Part 3 of Division 2 of the California Public Contract Code. If such claims exceed $375,000, then Contractor shall prepare a compendium of claims submitted and not resolved as a result of these procedures, and submit them in a Govt. Code Section 910 form of claim for final investigation and consideration of their settlement prior to initiation of any litigation thereon, as required by Government Code Section 945.4. Pursuant to Government Code Section 930.2, the one-year period in Government Code Section 911.2 shall be reduced to 150 days.

## 13. LEGAL AND MISCELLANEOUS

### 13.1 Laws And Regulations

13.1.A. Contractor shall keep fully informed of and shall comply with all laws, ordinances, regulations, and orders of any properly constituted authority affecting the Contract Documents, Work and persons connected with Work, and shall protect and indemnify Owner and its officers, employees, consultants, and agents against any claim or liability, including attorneys' fees, arising from or based on violation of law, ordinance, regulation or order, whether by Contractor or by Subcontractors, employees, or agents. Authorized persons may at any time enter upon any part of Work to ascertain compliance of all applicable laws, ordinances, regulations and orders.

13.1.B. Whenever Drawings and Specifications require larger sizes or higher standards than are required by any applicable law, ordinance, regulation, or order, Drawings and Specifications shall govern. Whenever Drawings and Specifications require something

that will violate such laws, ordinances, regulations, or orders, then such laws, ordinances, regulations, or orders shall govern.

**13.2 Permits And Taxes**

13.2.A. Contractor shall procure all permits and licenses applicable to the Work (including environmental matters to the extent applicable); pay all charges and fees, including fees for street opening permits; comply with, implement, and acknowledge effectiveness of all permits; initiate and cooperate in securing all required notifications or approvals therefore; and give all notices necessary and incident to due and lawful prosecution of Work, unless otherwise provided herein. Owner will pay applicable building permits, school, sanitation, and water fees for the completed construction. Contractor shall pay all sales and/or use taxes levied on materials, supplies, or equipment purchased and used on or incorporated into Work, and all other taxes properly assessed against equipment or other property used in connection with Work, without any increase in the Contract Sum. Contractor shall make necessary arrangements with proper authorities having jurisdiction over roads, streets, pipelines, navigable waterways, railroads, and other works in advance of operations, even where Owner may have already obtained permits for the Work.

**13.3 Responsibility Of Contractor And Indemnification**

13.3.A. Owner and each of its officers, employees, consultants, and agents including, but not limited to, Agency, the Board, Engineer, and each Owner's Representative, shall not be liable or accountable in any manner for loss or damage that may happen to any part of the Work; loss or damage to materials or other things used or employed in performing the Work; injury, sickness, disease, or death of any person; or damage to property resulting from any cause whatsoever except their sole negligence, willful misconduct or active negligence, attributable to performance or character of the Work, and Contractor releases all of the foregoing persons and entities from any and all such claims.

13.3.B. To the furthest extent permitted by law (including without limitation California Civil Code Section 2782), Contractor shall assume defense of, and indemnify and hold harmless, Owner and each of its officers, employees, consultants, and agents, including but not limited to, Agency, the Board, Engineer, and each Owner's Representative, from claims, suits, actions, losses and liability of every kind, nature and description, including but not limited to claims and fines of regulatory agencies and attorneys' fees and consultants' fees, directly or indirectly arising out of, connected with or resulting from performance of the Work, failure to perform the Work, or condition of the Work which is caused in whole or part by any act or omission of Contractor, Subcontractors, anyone directly or indirectly employed by any of them or anyone for whose acts any of them may be liable, regardless of whether it is caused in part by the negligence of Owner or by any person or entity required to be indemnified hereunder.

13.3.C. With respect to third-party claims against Contractor, Contractor waives any and all rights to any type of express or implied indemnity against Owner and each of its officers, employees, consultants, and agents including, but not limited to, Agency, Owner, the Board, Engineer and each Owner's Representative.

13.3.D. Approval or purchase of any insurance contracts or policies shall in no way relieve from liability nor limit the liability of Contractor, its Subcontractors of any tier, or the officers or agents of any of them.

13.3.E. To the furthest extent permitted by law (including, without limitation, Civil Code Section 2782), the indemnities, releases of liability and limitations of liability, claims procedures, and limitations of remedy expressed throughout Contract Documents shall apply even in the event of breach of Contract, negligence (active or passive), fault or strict liability of the party(ies) indemnified, released, or limited in liability, and shall survive the termination, rescission, breach, abandonment, or completion of the Work or the terms of the Contract Documents. If Contractor fails to perform any of these defense or indemnity obligations, Owner may in its discretion back charge Contractor for Owner's costs and damages resulting therefrom and withhold such sums from progress payments or other Contract moneys which may become due.

13.3.F. The indemnities in the Contract Documents shall not apply to any indemnified party to the extent of its sole negligence or willful misconduct; nor shall they apply to Owner or other indemnified party to the extent of its active negligence.

**13.4 Concealed Or Unknown Conditions**

13.4.A. If either of the following conditions is encountered at Site when digging trenches or other excavations that extend deeper than four feet below the surface, Contractor shall give a written Notice of Differing Site Conditions to Owner promptly before conditions are disturbed, except in an emergency as required by paragraph 16.4 of this Document 00700, and in no event later than seven Days after first observance of:

1. Subsurface or Latent physical conditions which differ materially from those indicated in the Contract Documents; or
2. Unknown physical conditions of an unusual nature or which differ materially from those ordinarily encountered and generally recognized as inherent in work of the character provided for in the Contract Documents.

13.4.B. In response to Contractor's Notice of Differing Site Conditions under paragraph 13.4.A, Owner will investigate the identified conditions, and if they differ materially and cause increase or decrease in Contractor's cost of, or time required for, performance of any part of the Work, Owner will issue either a Request for Proposal or a Construction Change Directive under the procedures described in the Contract Documents, including without limitation Section 01250 (Modification Procedures). If Owner determines that physical conditions at the Site are not Latent or are not materially different from those indicated in Contract Documents or that no change in terms of the Contract Documents is justified, Owner will so notify Contractor in writing, stating reasons (with Contractor retaining its rights under Article 12 of this Document 00700).

13.4.C. Contractor shall not be entitled to any adjustment in the Contract Sum or Contract Time regarding claimed Latent or materially different Site conditions (whether above or below grade) if:

1. Contractor knew of the existence of such conditions at the time Contractor submitted its Bid; or
2. Contractor should have known of the existence of such conditions as a result of having complied with the requirements of Contract Documents, including without limitation paragraphs 2.1 and 8.4 of this Document 00700; or
3. The information or conditions claimed by Contractor to be Latent or materially different consist of information, conclusions, opinions, or deductions of the kind that paragraph 2.1 of this Document 00700 precludes reliance upon; or

4. Contractor was required to give written Notice of Differing Site Conditions and failed to do so within the time required.

13.4.D. If Owner and Contractor are unable to agree on entitlement to or as to the amount or length of any adjustment in the Contract Sum or Contract Time required under this paragraph 13.4, Contractor shall proceed with the Work as directed by Owner and may make a claim as provided in Article 12 of this Document 00700.

**13.5 Notice Of Hazardous Waste Or Materials Conditions**

13.5.A. Contractor shall give a written Notice of Hazardous Materials Condition to Owner promptly, before any of the following conditions are disturbed (except in an emergency as required by paragraph 16.4 of this Document 00700), and in no event later than 24 hours after first observance of any:

1. Material that Contractor believes may be hazardous waste or hazardous material, as defined in Section 25117 of the Health and Safety Code (including, without limitation, Asbestos, lead, PCBs, petroleum and related hydrocarbons, and radioactive material) that is required to be removed to a Class I, Class II, or Class III disposal site in accordance with provisions of existing law ("hazardous material"); or
2. Other material that may present an imminent substantial danger to persons or property exposed thereto in connection with Work at the Site ("other materials").

13.5.B. Except as otherwise provided in the Contract Documents or as provided by applicable law, Contractor shall not be required to give any notice for the disturbance or observation of any such hazardous materials or other materials where such matter is disturbed or observed as part of the scope of Work under the Contract Documents (such as hazardous waste or hazardous material investigation, remediation or disposal activities which are identified as the subject of Work under the Contract Documents), where Contractor complies with all requirements in the Contract Documents and applicable law respecting such materials.

13.5.C. Contractor's Notice of Hazardous Materials Condition shall indicate whether the hazardous materials or other materials were shown or indicated in the Contract Documents to be within the scope of Work, and whether the hazardous materials or other materials were brought to the Site by Contractor, its Subcontractors, suppliers, or anyone else for whom Contractor is responsible.

13.5.D. Contractor shall not be entitled to any adjustment in the Contract Sum or Contract Time regarding claimed hazardous waste or materials if:

1. Contractor knew of the existence of such hazardous materials or other materials at the time Contractor submitted its Bid; or
2. Contractor should have known of the existence of such hazardous material or other materials as a result of its having the responsibility to obtain additional or supplementary examinations, investigation, explorations, tests, studies, and data concerning the conditions at or contiguous to the Site prior to submitting its Bid; or
3. Contractor failed to give the written notice within the time required by paragraph 13.5.A of this Document 00700.

13.5.E. If Owner determines that conditions involve hazardous materials or other materials and that a change in Contract Document terms is justified, Owner will issue either a Request for Proposal or Construction Change Directive under the procedures described in the Contract Documents, including without limitation Section 01250

(Modification Procedures). If Owner determines that conditions do not involve hazardous materials or other materials or that no change in Contract Document terms is justified, Owner will notify Contractor in writing, stating the reasons for its determination.

13.5.F. In addition to the parties' other rights under paragraph 13.5.E of this Document 00700, if Contractor does not agree to resume Work based on a reasonable belief that it is unsafe, or does not agree to resume Work under special conditions, Owner may order the disputed portion of Work deleted from the Work, or performed by others, or Owner may invoke its right to terminate Contractor's right to proceed under the Contract Documents in whole or in part, for convenience or for cause as the facts may warrant.

13.5.G. If Contractor does not agree with any Owner determination of any adjustment in the Contract Sum or Contract Time under this paragraph 13.5, Contractor may make a claim as provided in Article 12 of this Document 00700.

**13.6 Suspension Of Work**

13.6.A. Owner may, without cause, order Contractor in writing to suspend, delay or interrupt Work in whole or in part for such period of time as Owner may determine. An adjustment shall be made for increases in cost of performance of Work of the Contract Documents caused by any such suspension, delay or interruption, calculated using the measures set forth in Section 01250 (Modification Procedures). No adjustment shall be made to extent that:

1. Performance is, was or would have been so suspended, delayed or interrupted by another cause for which Contractor is responsible; or
2. An equitable adjustment is made or denied under any other provision of Contract Documents; or
3. The suspension of Work was the direct or indirect result of Contractor's failure to perform any of its obligations hereunder. Adjustments made in cost of performance may have a mutually agreed fixed or percentage fee; if the parties cannot agree, Contractor may file a claim under Article 12 of this Document 00700.

**13.7 Termination Of Contract For Cause**

13.7.A. Owner may declare Contractor in default of Contract Documents and Owner may terminate Contractor's right to proceed under the Contract Documents for cause:

1. Should Contractor make an assignment for the benefit of creditors; admit in writing its inability to pay its debts as they become due; file a voluntary petition in bankruptcy; be adjudged a bankrupt or insolvent; be the subject of an involuntary petition in bankruptcy which is not dismissed within 60 Days; file a petition or answer seeking for itself any reorganization, arrangement, composition, readjustment, liquidation, dissolution, or similar relief under any present or future statute, law, or regulation; file any answer admitting or not contesting the material allegations of a petition filed against Contractor in any such proceeding; or seek, consent to, or acquiesce in, the appointment of any trustee, receiver, custodian or liquidator of Contractor or of all or any substantial part of its properties or if Contractor, its directors or shareholders, take action to dissolve or liquidate Contractor; or
2. Should Contractor commit a material breach of the Contract Documents. If Owner declares Contractor in default due to material breach, however, Owner must allow

Contractor an opportunity to cure such breach within ten Days of the date of notice from Owner to Contractor providing notice of the default; or, if such breach is curable but not curable within such ten-Day period, within such period of time as is reasonably necessary to accomplish such cure. (In order for Contractor to avail itself of a time period in excess of ten Days, Contractor must provide Owner within the ten-Day period with a written plan acceptable to Owner to cure said breach which includes, for example, evidence of necessary resources, Subcontractor commitments, schedules and recovery schedules meeting Contract Document requirements and showing a realistic and achievable plan to cure the breach. Contractor must then diligently commence and continue such cure according to the written plan); or

3. Should Contractor violate or allow (by a Subcontractor or other person or entity for which Contractor is responsible) a violation of any valid law, statute, regulation, rule, ordinance, permit, license or order of any governmental agency applicable to the Project or Work and does not cure (or cause to be cured) such violation within ten Days of the date of the notice from Owner to Contractor demanding such cure; or, if such violation is curable but not curable within such ten-Day period, within such period of time as is reasonably necessary to accomplish such cure. (In order for Contractor to avail itself of a time period in excess of ten Days, Contractor shall provide Owner within the ten-Day period with a written plan to cure said violation acceptable to Owner, and then diligently commence and continue performance of such cure according to the written plan.)

13.7.B. If Owner at any time reasonably believes that Contractor is or may be in default under the Contract Documents as provided in paragraph 13.7.A of this Document 00700, Owner may in its sole discretion notify Contractor of this fact and request written assurances from Contractor of performance of Contract Documents and a written plan from Contractor to remedy any default under the terms of Contract Documents which Owner may advise Contractor of in writing. Contractor shall, within 10 Days of Owner's request, deliver a written cure plan which meets the requirements of the written plan deliverable under paragraph 13.7.A.2 of this Document 00700. Failure of Contractor to provide such written assurances of performance and the required written plan, within ten Days of request, will constitute a material breach of Contract Documents sufficient to justify termination for cause.

13.7.C. In event of termination for cause, Owner will immediately serve written notice thereof upon Surety and Contractor. Surety shall have the rights and obligations set forth in Document 00611 (Construction Performance Bond). Subject to the Surety's rights under the Performance Bond (which rights are waived upon a default thereunder), Owner may take over the Work and prosecute it to completion by contract or by any other methods it may deem advisable.

13.7.D. In the event of termination by Owner as provided in paragraph 13.7.A of this Document 00700 for cause:

1. Owner will compensate Contractor for the value of the Work delivered to Owner upon termination as determined in accordance with the Contract Documents, subject to all rights of offset and back charges, and provided that Contractor provides Owner with updated as-builts and Project Record Documents showing the Work performed up to the date of termination. However, Owner will not compensate Contractor for its costs in terminating the Work or any cancellation charges owed to third parties.

2. Contractor shall deliver to Owner possession of the Work in its then condition including, but not limited to, all designs, engineering, Project records, Project Record Documents, cost data of all types, Drawings and Specifications and contracts with vendors and Subcontractors, all other documentation associated with the Project, and all construction supplies and aids dedicated solely to performing the Work which, in the normal course of construction, would be consumed or only have salvage value at the end of the construction period. Contractor shall remain fully liable for the failure of any Work completed and materials and equipment provided through the date of such termination to comply with the provisions of the Contract Documents. The provisions of this paragraph 13.7.D shall not be interpreted to diminish any right which Owner may have to claim and recover damages for any breach of Contract Documents or otherwise, but rather, Contractor shall compensate Owner for all loss, cost, damage, expense, and/or liability suffered by Owner as a result of such termination and failure to comply with Contract Documents.
3. Owner's rights under paragraph 13.7.D.2 shall be specifically enforceable to the greatest extent permitted by law. Owner shall, to the extent applicable, have all other rights and remedies set forth in any Bidding Document.

13.7.E. Owner may terminate portions or parts of the Work for cause, provided these portions or parts (1) have separate geographic areas from parts or portions of the Work not terminated or (2) are limited to the Work of one or more specific trades or Subcontractors. In such case, Contractor shall cooperate with a competing contractor as required under Article 6 of this Document 00700.

13.7.F. In the event a termination for cause is determined to have been made wrongfully or without cause, then the termination shall be treated as a termination for convenience, and Contractor shall have no greater rights than it would have had following a termination for convenience. Any Contractor claim arising out of a termination for cause shall be made in accordance with the provisions of the Contract Documents on claims and calculated in accordance with the provisions of the Contract Documents on Change Orders and claims. No other loss cost, damage, expense or liability may be claimed, requested or recovered by Contractor.

**13.8 Termination Of Contract For Convenience**

13.8.A. Owner may terminate performance of the Work under the Contract Documents in accordance with this clause in whole, or from time to time in part, whenever Owner shall determine that termination is in Owner's best interest. Termination shall be effected by Owner delivering to Contractor notice of termination specifying the extent to which performance of the Work under the Contract Documents is terminated and the effective date of the termination.

13.8.B. After receiving a notice of termination under paragraph 13.8.A of this Document 00700, and except as otherwise directed by Owner, Contractor shall:

1. Stop Work under the Contract Documents on date and to extent specified in notice of termination;
2. Place no further orders or subcontracts for materials, services, or facilities except as necessary to complete portion of Work under the Contract Documents which is not terminated;
3. Terminate all orders and subcontracts to extent that they relate to performance of Work terminated by the notice of termination;

4. Assign to Owner in manner, at times, and to extent directed by Owner, all right, title, and interest of Contractor under orders and subcontracts so terminated. Owner shall have the right, in its sole discretion, to settle or pay any or all claims arising out of termination of orders and subcontracts;
5. Settle all outstanding liabilities and all claims arising out of such termination of orders and subcontracts, with approval or ratification of Owner to extent Owner may require. Owner's approval or ratification shall be final for purposes of this paragraph 13.8;
6. Transfer title to Owner, and deliver in the manner, at the times, and to the extent, if any, directed by Owner, all fabricated or unfabricated parts, Work in process, completed Work, supplies, and all other material produced as part of, or acquired in connection with performance of, Work terminated by the notice of termination, and completed or partially completed drawings, drawings, specifications, information, and other property which, if the Project had been completed, would have been required to be furnished to Owner;
7. Use its best efforts to sell, in manner, at times, to extent, and at price or prices that Owner directs or authorizes, any property of types referred to in paragraph 13.8.B.6 of this Document 00700, but Contractor shall not be required to extend credit to any purchaser, and may acquire any such property under conditions prescribed and at price or prices approved by Owner. Proceeds of transfer or disposition shall be applied to reduce payments to be made by Owner to Contractor under the Contract Documents or shall otherwise be credited to the price or cost of Work covered by Contract Documents or paid in such other manner as Owner may direct;
8. Complete performance of the part of the Work which was not terminated by the notice of termination; and
9. Take such action as may be necessary, or as Owner may direct, to protect and preserve all property related to Contract Documents which is in Contractor's possession and in which Owner has or may acquire interest.

13.8.C. After receipt of a notice of termination under paragraph 13.8.A of this Document 00700, Contractor shall submit to Owner its termination claim, in form and with all certifications required by Article 12 of this Document 00700. Contractor's termination claim shall be submitted promptly, but in no event later than 6 months from effective date of the termination. Contractor and Owner may agree upon the whole or part of the amount or amounts to be paid to Contractor because of a total or partial termination of Work under this paragraph 13.8. If Contractor and Owner fail to agree on the whole amount to be paid to Contractor because of the termination of the Work under this paragraph 13.8, Owner's total liability to Contractor by reason of the termination shall be the total (without duplication of any items) of:

1. The reasonable cost to Contractor, without profit, for all Work performed prior to the effective date of the termination, including Work done to secure the Project for termination. Reasonable cost may not exceed the applicable percentage completion values derived from the Progress Schedule and the Schedule of Values. Deductions shall be made for cost of materials to be retained by Contractor, cost of Work defectively performed, amounts realized by sale of materials, and for other appropriate credits against cost of Work. Reasonable cost will include reasonable allowance for Project overhead and general administrative overhead not to exceed a total of ten percent of direct costs of such Work. When, in Owner's opinion, the

cost of any item of Work is excessively high due to costs incurred to remedy or replace Defective or rejected Work, reasonable cost to be allowed will be the estimated reasonable cost of performing the Work in compliance with requirements of Contract Documents and excessive actual cost shall be disallowed.

2. A reasonable allowance for profit on cost of Work performed as determined under paragraph 13.8.C.1 of this Document 00700, provided that Contractor establishes to Owner's satisfaction that Contractor would have made a profit had the Project been completed, and provided further that the profit allowed shall not exceed 5 percent of cost.
3. Reasonable costs to Contractor of handling material returned to vendors, delivered to Owner or otherwise disposed of as directed by Owner.
4. A reasonable allowance for Contractor's internal administrative costs in preparing termination claim.
5. Except as provided in this paragraph 13.8.C of this Document 00700, Owner shall not be liable for costs incurred by Contractor or Subcontractors after receipt of a notice of termination. Such non-recoverable costs include, but are not limited to, anticipated profits on Work not performed as of the date of termination, post-termination employee salaries, post-termination general administrative expenses, post-termination overhead or unabsorbed overhead, costs of preparing and submitting Contractor's Bid, attorneys' fees of any type, and all costs relating to prosecution of claim or lawsuit.
6. Owner shall have no obligation to pay Contractor under this paragraph 13.8 unless and until Contractor provides Owner with updated and acceptable as-builts and Project Record Documents for Work completed prior to termination.

13.8.D. In arriving at the amount due Contractor under this clause, there shall be deducted:

1. All unliquidated advances or other payments on account previously made to Contractor which are applicable to the terminated portion of Contract Documents;
2. Any claim which Owner may have against Contractor in connection with Contract Documents; and
3. The agreed price for, or proceeds of sale of, any materials, supplies, or other things kept by Contractor or sold under provisions of this paragraph 13.8, and not otherwise recovered by or credited to Owner.

**13.9 Contingent Assignment Of Subcontracts**

13.9.A. Contractor hereby assigns to Owner each Subcontract for a portion of the Work, provided that:

1. The assignment is effective only after Owner's termination of Contractor's right to proceed under the Contract Documents (or portion thereof relating to that Subcontract) pursuant to paragraphs 13.7 or 13.8 of this Document 00700.
2. The assignment is effective only for the Subcontracts which Owner expressly accepts by notifying the Subcontractor in writing;
3. The assignment is subject to the prior rights, if any, of the Surety, obligated by Document 00611 (Construction Performance Bond) provided under the Contract Documents, where the Surety exercises its rights to complete the Contract;
4. After the effectiveness of an assignment, Contractor shall, at its sole cost and expense (except as otherwise provided in paragraphs 13.7 or 13.8 of this Document 00700), sign all instruments and take all actions reasonably requested by Owner to evidence and confirm the effectiveness of the assignment in Owner; and

5. Nothing in this paragraph 13.9 shall modify or limit any of Contractor's obligations to Owner arising from acts or omissions occurring before the effectiveness of any Subcontract assignment, including but not limited to all defense, indemnity and hold-harmless obligations arising from or related to the assigned Subcontract.

**13.10 Remedies and Contract Integration**

13.10.A. Subject to Contract Documents provisions regarding Contractor claims, claim review, and claim resolution, and subject to the limitations therein, the exclusive jurisdiction and venue for resolving all claims, counter-claims, disputes and other matters in question between Owner and Contractor arising out of or relating to Contract Documents, any breach thereof or the Project shall be the applicable court of competent jurisdiction located in the State of California, County of Sonoma. All Owner remedies provided in the Contract Documents shall be taken and construed as cumulative and not exclusive; that is, in addition to each and every other remedy herein provided; and in all instances Owner shall have any and all other equitable and legal rights and remedies which it would have according to law.

13.10.B. The Contract Documents, any Contract Modifications, and Change Orders shall represent the entire and integrated agreement between Owner and Contractor regarding the subject matters hereof and thereof and shall constitute the exclusive statement of the terms of the parties' agreement. The Contract Documents, and any Contract Modifications and Change Orders, shall supersede any and all prior negotiations, representations or agreements, written or oral, express or implied, that relate in any way to the subject matter of the Contract Documents or written Modifications. Owner and Contractor represent and agree that, except as otherwise expressly provided in the Contract Documents, they are entering into the Contract Documents and any subsequent written Modification in sole reliance upon the information set forth or referenced in the Contract Documents or Contract Modifications and the parties are not and will not rely on any other information.

13.10.C. In any proceeding to enforce the Contract Documents, Contractor and Owner agree that the finder of fact shall receive detailed instructions on the meaning and operation of the Contract Documents, including their conditions, limitations of liability and remedies clauses, claims procedures and any other provisions impacting major defenses and theories of liability of the parties. Detailed findings of fact shall be requested, to verify Contract enforcement.

13.10.D. Either party's waiver of any breach or failure to enforce any of the terms, covenants, conditions or other provisions of the Contract Documents at any time shall not in any way affect, limit, modify or waive that party's right thereafter to enforce or compel strict compliance with every term, covenant, condition or other provision hereof, any course of dealing or custom of the trade or oral representations notwithstanding.

**13.11 Patents**

13.11.A. Fees or claims for any patented invention, article or arrangement that may be used upon or in any manner connected with performance of the Work or any part thereof shall be included in the Bid price for doing the Work. Contractor shall defend, indemnify and hold harmless Owner and each of its officers, employees, consultants and agents, including, but not limited to, the Board and each Owner's Representative, including Agency from all damages, claims for damages, costs or expenses in law or equity, including attorneys' fees, arising from or relating to any claim that any article

supplied or to be supplied under the Contract Documents infringes on the patent rights, copyright, trade name, trademark, service mark, trade secret or other intellectual property right of any person or persons or that the person or entity supplying the article does not have a lawful right to sell the same. Such costs or expenses for which Contractor agrees to indemnify and hold harmless the above indemnities include but are not limited to any and all license fees, whether such fees are agreed by any indemnitee or ordered by a court or administrative body of any competent jurisdiction.

**13.12 Substitution For Patented And Specified Articles**

13.12.A. Except as provided otherwise in Document 00200 (Instructions to Bidders) or in the Contract Documents, whenever in Specifications, material or process is designated by patent or proprietary name or by name of manufacturer, such designation shall be deemed to be used for purpose of facilitating description of material and process desired, and shall be deemed to be followed by the words "or Approved Equal" and Contractor may offer any substitute material or process that Contractor considers "equal" in every respect to that so designated and if material or process offered by Contractor is, in opinion of Owner, Equal in every respect to that so designated, its use will be approved. However, Contractor may utilize this right only by timely submitting Document 00660 (Substitution Request Form) as provided in Document 00200 (Instructions to Bidders). A substitution will be approved only if it is a true Equal item in every aspect of its design and quality, including but not limited to its dimensions, weights, service requirements, durability, functioning, impact on contiguous construction elements, overall schedule and design.

**13.13 Interest Of Public Officers**

13.13.A. No representative, officer, or employee of Owner or Agency, no member of the governing body of the locality in which the Project is situated, no member of the locality in which Owner or Agency was activated, and no other public official of such locality or localities who exercises any functions or responsibilities with respect to the Project, during the tenure of the official or for one year thereafter, shall, as principal, agent, attorney or otherwise, be directly or indirectly interested, in the Contract Documents or the proceeds thereof.

**13.14 Limit Of Liability**

13.14.A. OWNER, AND EACH OF ITS OFFICERS, BOARD MEMBERS, EMPLOYEES, CONSULTANTS AND AGENTS INCLUDING, BUT NOT LIMITED TO, ENGINEER, THE AGENCY, AND EACH OTHER OWNER REPRESENTATIVE, SHALL HAVE NO LIABILITY TO CONTRACTOR FOR SPECIAL, CONSEQUENTIAL, OR INCIDENTAL DAMAGES, EXCEPT TO THE LIMITED EXTENT THAT THESE CONTRACT DOCUMENTS OR APPLICABLE PUBLIC CONTRACTING STATUTES MAY SPECIFY THEIR RECOVERY.

## 14. MODIFICATIONS OF CONTRACT DOCUMENTS

**14.1 Alterations, Modifications And Force Account Work**

14.1.A. No modification or deviation from the Drawings and Specifications will be permitted except by written Contract Modification.

14.1.B. Owner may, without notice to the sureties, make alterations, deviations, additions to, or deletions from Contract Documents; increase or decrease the quantity of any item or portion of the Work; expand, contract or otherwise change the Contract Time; delete any item or portion of the Work; and require extra Work. Contractor shall perform such Work under applicable provisions of the Contract Documents, unless specifically provided otherwise at the time the change is ordered. In the case of any ordered extra Work, Owner reserves the right to furnish all or portions of associated labor, material, and equipment, which Contractor shall accept and use without payment for costs, markup, profit, or otherwise for such Owner-furnished labor, materials, and equipment.

14.1.C. Changes affecting the Contract Time or Contract Sum of the Work shall be set forth in a written Change Order that shall specify:

1. The Work performed in connection with the change to be made;
2. The amount of the adjustment of the Contract Sum, if any, and the basis for compensation for the Work ordered; and
3. The extent of the adjustment in the Contract Time, if any.

14.1.D. A Change Order will become effective when signed by Owner. If Owner exercises its right to decide disputed issues pertaining to changed Work as set forth in Articles 12 and 14 of this Document 00700, then the resulting Change Order shall be effective when signed by Owner, notwithstanding that Contractor has not signed it.

14.1.E. Changes not affecting the Contract Time or Contract Sum of the Work, in Owner's discretion, may be set forth in a written RFI-Reply executed by Owner. Execution of such an RFI-Reply constitutes Contractor's agreement to make the specified change without change to the Contract Sum or the Contract Time.

14.1.F. Changes or deviations from Contract Documents affecting the Contract Time or Contract Sum of the Work shall not be made without the authority of an effective Change Order or Construction Change Directive as provided in Section 01250 (Modification Procedures), except in cases of emergency discussed in Article 16 of this Document 00700.

14.1.G. If changes ordered in design, workmanship or materials are of such a nature as to increase or decrease the cost of any part of the Work, the price fixed in the Contract Documents shall be increased or decreased by the amount that Contractor and Owner may agree upon as a reasonable and proper allowance for the cost increase or decrease. If an agreement cannot be reached, then Owner will reach a determination, which shall be final, subject to Contractor's rights under Article 12 of this Document 00700. In all cases Contractor shall perform the changed Work as directed by Owner subject to Contractor's rights under Article 12 of this Document 00700.

14.1.H. Contractor shall, upon Owner's request, permit inspection of the original unaltered Bid estimate, subcontract agreements, purchase orders relating to the change, and documents substantiating all costs associated with its cost proposal or claims arising from changes in the Work.

14.1.I. Changes in the Work made pursuant to this Article 14 and extensions of Contract Time necessary by reason thereof shall not in any way release the guarantees and warranties given by Contractor pursuant to provisions of the Contract Documents, nor shall such changes in the Work relieve or release the Sureties of bonds executed pursuant to said provisions. The Sureties, in executing such bonds, shall be deemed to have expressly

agreed to any such change in the Work and to any extension of time made by reason thereof.

14.1.J. Procedures for Modifications of Contract Documents and for calculating the cost of extra and deleted Work are given in Section 01250 (Modification Procedures). Regarding delay and impact costs of any nature, Contractor may not seek delay compensation for on-Site or off-Site costs based on formulas, e.g., "Eichlay" or other formula. Rather, Contractor shall prove actual costs resulting from such delays. If Contractor requests compensation for delay to the construction, then Contractor shall prove and document actual costs plus markup per the cost categories and procedures in Section 01250 (Modification Procedures) in order to request, claim or prove compensation for delay.

14.1.K. Owner's General Manager is authorized to approve Change Orders in accordance with Resolution No. 04-0547 dated June 8, 2004. The approval period for such Change Orders is approximately seven Days from receipt of the signed Change Order from Contractor. If a Change Order is equal to or greater than the amounts authorized by Resolution No. 04-0547, it may be necessary for the Board to approve the Change Order, and if so the approval period is approximately 28 Days from receipt of the signed Change Order from Contractor. A performance bond rider covering the changed Work must be executed and delivered to Owner before proceeding with the changed Work. Contractor is charged with knowledge of Owner's approved Change Order limits and procedures in effect at the applicable time.

## 15. TIME ALLOWANCES

### 15.1 Time Allowances For Performance Of Contract Documents

15.1.A. When Contractor and Owner have signed the Contract Documents, Owner will serve a Notice to Proceed upon Contractor to that effect, either by depositing notice in a post office or post office box regularly maintained by United States Postal Service in a pre-paid wrapper directed to Contractor at legal address or (at Owner's option) by delivery by other means at legal address.

15.1.B. The start date for Contract Time shall be on the date indicated in the applicable Notice to Proceed. If no date is indicated, the start date for Contract Time shall be the fifth Day from the date that Contractor receives, by hand delivery or facsimile transmission, Owner's written Notice to Proceed, unless the Notice to Proceed is served by mail only, in which case the start date for Contract Time shall be the fifth Day following the mailing date. The total number of Days for completion of the Work under the Contract Documents shall be as provided in Document 00520 (Agreement).

### 15.2 Entitlement to Change Of Contract Time

15.2.A. The Contract Time may only be changed by Change Order or by Contract Modification, and all time limits stated in the Contract Documents are of the essence of Contract Documents.

15.2.B. The Contract Time will be adjusted by the number of Work Days lost due to:

1. Changes in the Work ordered by Owner;
2. Acts or neglect by Owner, Engineer, any Owner's Representative, utility owners or other contractors performing other work, provided that Contractor has fully and completely performed its responsibilities under the Contract Documents; or

3. Fires, floods, epidemics, abnormal weather conditions beyond the parameters otherwise set forth in this paragraph 15.2, earthquakes, civil or labor disturbances, strikes or Acts of God, provided damages resulting therefrom are not the result of Contractor's failure to protect the Work as required by Contract Documents.

15.2.C. The Contract Time shall not be extended for any cause identified in paragraph 15.2.B above, however, unless:

1. Contractor actually has been prevented from completing any part of the Work within the Contract Time due to delay that is beyond Contractor's control and due to reasons for which Contractor is not responsible (delays attributable to and within the control of a Subcontractor, or its subcontractors, or supplier shall be deemed to be delays within the control of Contractor);
2. A claim for delay is made as provided herein; and
3. Contractor submits a Time Impact Evaluation as required under Section 01320 (Progress Schedules and Reports) that demonstrates actual delay to critical Work activities that actually delay the progress of the Work in the amount of time requested.

15.2.D. Where Contractor is prevented from completing any part of the Work within the Contract Time due to delay beyond the control of both Owner and Contractor (including, but not limited to, adverse weather of all types and acts of other contractors or utilities), an extension of Contract Time, in an amount equal to the number of Work Days lost due to such delay (without compensation), shall be Contractor's sole and exclusive remedy for such delay.

**15.3 Weather-Related Delays**

15.3.A. Delays due to abnormal or adverse weather conditions will not be allowed for weather conditions that fall within the parameters listed herein. Adverse weather delays may be allowed only if the number of Work Days of adverse weather exceeds these on a monthly basis and Contractor proves that adverse weather actually caused delays. Contractor shall give written notice of intent to claim an adverse weather Day within one Work Day of the adverse weather delay occurring. Rain parameters are as follows, pro-rated in the individual month Contractor starts and finishes Work.

Rain Days: January, [9]; February, [8]; March, [7]; April, [4]; May, [2]; June, [1]; July, [0]; August, [0]; September, [1]; October, [3]; November, [6]; and December, [8].

In order to qualify as an adverse weather delay with respect to the foregoing parameters, daily rainfall must exceed 0.10 of an inch or more at the Santa Rosa, California station, as measured by the National Oceanic & Atmospheric Administration, and Contractor must prove that the rain actually caused delay as set forth above.

15.3.B. Contractor shall include the foregoing rain parameters as a monthly activity in its Progress Schedule. As Work on the critical path is affected by rain, Contractor shall notify Owner and request that the Days be moved to the affected activities. Any adverse weather Days remaining shall be considered Project Float.

15.3.C. Adverse weather delay for rain shall be recognized for the actual period of time Contractor proves it was delayed by rain exceeding the specified parameters. For example, and not by way of limitation, if rain exceeding the specified parameters does not in fact delay Contractor's progress on the critical path, then no time extension shall be recognized; and conversely, if Contractor proves that rain exceeding the specified

parameters causes delay to Contractor for a period longer than the number of rain Days incurred (e.g., if it rains during grading Work), then Contractor shall be entitled to a time extension equal to the actual period of such delay.

15.3.D. Contractor shall take reasonable steps to mitigate potential weather delays, such as dewatering the Site, covering Work and material that could be affected adversely by weather, and using all necessary construction means and methods to dry and/or aerate wet soils. Failure to do so shall be cause for Owner to not grant a time extension due to adverse weather, where Contractor could have avoided or mitigated the potential delay by exercising reasonable care.

**15.4 Notice Of Delay**

15.4.A. Within seven Days of the beginning of any delay, Contractor shall notify Owner in writing, by submitting a notice of potential claim, of all anticipated delays resulting from the delay event in question. Any request for extension of time shall be accompanied by Contractor's written statement that the adjustment claimed is the entire adjustment to which the Contractor is entitled as a result of the occurrence of said event, and shall include a written schedule document that demonstrates delay to the critical path using a Time Impact Evaluation as specified in Section 01320 (Progress Schedules). Owner will determine all claims and adjustments in the Contract Time. No claim for an adjustment in the Contract Time will be valid and such claim will be waived if not submitted in accordance with the requirements of this paragraph 15.4.A.

**15.5 Time Extensions And/Or Compensation Entitlement For Delays**

15.5.A. Contractor may receive a time extension and be compensated for delays caused directly and solely by Owner.

15.5.B. Contractor may receive a time extension without compensation for delays resulting in whole or in part from causes beyond the reasonable control of Contractor and Owner, e.g., adverse weather conditions exceeding Contract Documents parameters, acts of third parties unrelated to Contractor's obligations herein, earthquakes, Acts of God and epidemics. In such cases, a time extension without compensation shall constitute Contractor's sole and exclusive remedy for such delays.

15.5.C. Contractor shall not be entitled to any time extension or compensation including, but not limited to, extended field or home office overhead, field supervision, costs of capital, interest, escalation charges, acceleration costs or other impacts for any delays caused in whole or in part by Contractor's failure to perform its obligations under the Contract Documents, or during periods of delay concurrently caused by Contractor and either Owner or others.

15.5.D. Contractor shall not be entitled to damages for delay to the Work caused by the following reasons:

1. Owner's right to sequence the Work in a manner which would avoid disruption to Owner's contractors and their subcontractors and Owner's employees, exercised as a result of Contractor's failure to perform its cooperation and coordination responsibilities required by Contract Documents; Owner's enforcement of any government act or regulation; or the provisions of the Contract Documents;
2. For changed Site conditions that are beyond the parties' contemplation, except that Owner may approve direct costs associated with unknown conditions (but not costs or damages which result from such delays); and

3. Extensive requests for clarifications to Contract Documents or Contract Modifications thereto, provided such clarifications or Contract Modifications are processed by Owner or its consultants in a reasonable time commensurate with Contract Documents requirements.

**15.6 Liquidated Damages**

15.6.A. Execution of Contract Documents by Contractor shall constitute acknowledgement by Contractor that Contractor understands, has ascertained and agrees that Owner will actually sustain damages in the amount fixed in the Contract Documents for each and every Day during which completion of Work required is delayed beyond expiration of time fixed for completion or extensions of time allowed pursuant to provisions hereof. Contractor and Owner agree that specified measures of liquidated damages shall be presumed to be the damages actually sustained by Owner as defined below, and that because of the nature of the Project, it would be impracticable or extremely difficult to fix the actual damages.

15.6.B. Liquidated damages shall be considered not as a penalty but as agreed monetary damage sustained by Owner for increased Project administration expenses, including extra inspection, construction management, and architectural and engineering expenses related to the Project and Contract Documents because Contractor failed to perform and complete Work within time fixed for completion or extensions of time allowed pursuant to provisions hereof. Liquidated damages shall not be deemed to include within their scope additional damages or administrative costs arising from Defective Work, lost revenues, interest expenses, cost of completion of the Work, cost of substitute facilities, claims and fines of regulatory agencies, damages suffered by others or other forms of liability claimed against Owner as a result of delay (e.g., delay or delay-related claims of other contractors or subcontractors), and defense costs thereof. Contractor shall be fully responsible for the actual amount of any such damages it causes, in addition to the liquidated damages otherwise due Owner.

15.6.C. Owner may deduct from any money due or to become due to Contractor subsequent to time for completion of entire Work and extensions of time allowed pursuant to provisions hereof, a sum representing then-accrued liquidated damages. Should Contractor fall behind the approved Progress Schedule, Owner may deduct liquidated damages based on its estimated period of late completion. Owner need not wait until Final Completion to withhold liquidated damages from Contractor's progress payments. Should money due or to become due to Contractor be insufficient to cover aggregate liquidated damages due, then Contractor forthwith shall pay the remainder of the assessed liquidated damages to Owner.

## 16. <u>WORKING CONDITIONS AND PREVAILING WAGES</u>

**16.1 Use Of Site/Sanitary Rules**

16.1.A. All portions of the Work shall be maintained at all times in neat, clean and sanitary condition. Contractor shall furnish toilets for use of Contractor's and Subcontractors' employees on the Site where needed, and their use shall be strictly enforced. All toilets shall be properly secluded from public observation, and shall be located, constructed and maintained subject to Owner's approval.

16.1.B. Contractor shall confine construction equipment, the storage of materials and equipment and the operations of workers to the Site and land areas identified in and

permitted by Contract Documents and other land and areas permitted by applicable laws and regulations, rights of way, permits and easements or as designated by Owner, and shall not unreasonably encumber the premises with construction equipment or other materials or equipment. Contractor shall assume full responsibility for any damage to any such land or area, any improvement located thereon, or to the owner or occupant thereof resulting from the performance of Work.

16.1.C. During the progress of the Work, Contractor shall keep the Site and the Project free from accumulations of waste materials, rubbish and other debris resulting from the Work. At the completion of the Work, Contractor shall clean the Site, remove all waste materials, rubbish and debris from and about the Site as well as all tools, appliances, construction equipment and machinery and surplus materials. Contractor shall leave the premises clean and ready for occupancy by Owner at Substantial Completion of Work. Contractor shall restore to original condition all property not designated for alteration by Contract Documents.

16.1.D. Contractor shall not load nor permit any part of any structure or pavement to be loaded in any manner that will endanger the structure or pavement, nor shall Contractor subject any part of Work or adjacent property to stresses or pressures that will endanger it. Contractor shall conduct all necessary existing conditions investigation regarding structural, mechanical, electrical or any other system existing, shall perform Work consistent with such existing conditions, and shall have full responsibility for insufficiencies or damage resulting from insufficiencies of existing systems, equipment or structures to accommodate performing the Work.

**16.2 Protection Of Work, Persons, And Property**

16.2.A. Contractor shall be responsible for initiating, maintaining and supervising all safety precautions and programs in connection with Work. Contractor shall comply with all safety requirements specified in any safety program established by Owner, or required by state, federal or local laws and ordinances. Contractor shall be responsible for all damage to Work, property or structures, and all injuries to persons either on the Site or constituting the Work (e.g., materials in transit), arising from the performance of Work of the Contract Documents from any cause.

16.2.B. Contractor shall comply with all applicable laws and regulations of any public body having jurisdiction for safety of persons or property or to protect them from damage, injury or loss; and shall erect and maintain all necessary safeguards for such safety and protection. Contractor shall notify owners of adjacent property and of Underground Facilities and utility owners when prosecution of the Work may affect them, and shall cooperate with them in the protection, removal, relocation and replacement of their property.

16.2.C. Contractor shall remedy all damage, injury or loss to any property referred to in paragraph 16.2.A of this Document 00700, caused, directly or indirectly, in whole or in part, by Contractor, any Subcontractor, supplier, or any other person or organization directly or indirectly employed by any of them to perform or furnish any Work or anyone for whose acts any of them may be liable. Contractor's duties and responsibility for safety and for protection of Work shall continue until such time as all the Work is completed and Final Acceptance of the Work. Owner and its agents do not assume any responsibility for collecting any indemnity from any person or persons causing damage to Contractor's Work.

16.2.D. Contractor shall designate a qualified and experienced safety representative at the Site whose duties and responsibilities shall be the prevention of accidents and the maintaining and supervising of safety precautions and programs.

16.2.E. Owner may, at its option, retain such moneys due under the Contract Documents as Owner deems necessary until any and all suits or claims against Contractor for injury to persons or property shall be settled and Owner receives satisfactory evidence to that effect.

**16.3 Responsibility For Safety And Health**

16.3.A. Contractor shall ensure that its and each tier of Subcontractors' employees, agents and invitees comply with applicable health and safety laws while at the Site. These laws include the Occupational Safety and Health Act of 1970 and rules and regulations issued pursuant thereto, and Owner's safety regulations as amended from time to time. Contractor shall comply with all Owner directions regarding protective clothing and gear.

16.3.B. Contractor shall be fully responsible for the safety of its and its Subcontractors' employees, agents and invitees on the Site. Contractor shall notify Owner, in writing, of the existence of hazardous conditions, property or equipment at the Site that are not under Contractor's control. Contractor shall be responsible for taking all the necessary precautions against injury to persons or damage to the property of Contractor, Subcontractors or persons from recognized hazards until the responsible party corrects the hazard.

16.3.C. Contractor shall confine all persons acting on its or its Subcontractors' behalf to that portion of the Site where Work under the Contract Documents is to be performed, Owner-designated routes for ingress and egress thereto, and any other Owner-designated area. Except those routes for ingress and egress over which Contractor has no right of control, within such areas, Contractor shall provide safe means of access to all places at which persons may at any time have occasion to be present.

**16.4 Emergencies**

16.4.A. In emergencies affecting the safety or protection of persons or Work or property at the Site or adjacent thereto, Contractor, without special instruction or authorization from Owner, is obligated to act to prevent threat and damage, injury or loss, until directed otherwise by Owner. Contractor shall give Owner prompt written notice if Contractor believes that any significant changes in Work or variations from Contract Documents have been caused thereby. If Owner determines that a change in the Contract Documents is required because of the action taken by Contractor in response to such an emergency, a Change Order or Construction Change Directive will be issued to document the consequences of such action.

**16.5 Use Of Roadways And Walkways**

16.5.A. Contractor shall not unnecessarily interfere with use of any roadway, walkway or other facility for vehicular or pedestrian traffic. Before beginning any interference and only with Owner's prior concurrence, Contractor may provide detour or temporary bridge for traffic to pass around or over the interference, which Contractor shall maintain in satisfactory condition as long as interference continues. Unless otherwise provided in the Contract Documents, Contractor shall bear the cost of these temporary facilities.

**16.6 Nondiscrimination**

16.6.A. No person or entity shall discriminate in the employment of persons upon public works because of race, religious creed, color, national origin, ancestry, physical disability, mental disability, medical condition, marital status, sexual preference, or gender of such persons, except as provided in Section 12940 of the Government Code. Every contractor for public works violating the provisions of Section 1735 of the Labor Code is subject to all the penalties imposed for a violation of Chapter 1, Part 7, Division 2 of the Labor Code. Contractor agrees to comply with the provisions of Chapter 19, Article II, of the Sonoma County Code prohibiting discrimination in housing, employment, and services because of AIDS or HIV infection during the term of this Contract and any extensions of the term.

**16.7 Prevailing Wages**

16.7.A. Contractor shall pay to persons performing labor in and about Work provided for in the Contract Documents an amount equal to or more than the general prevailing rate of per diem wages for (1) work of a similar character in the locality in which the Work is performed and (2) legal holiday and overtime work in said locality. The per diem wages shall be an amount equal to or more than the stipulated rates contained in a schedule that has been ascertained and determined by the Director of the State Department of Industrial Relations and Owner to be the general prevailing rate of per diem wages for each craft or type of workman or mechanic needed to execute this Contract. Contractor shall also cause a copy of this determination of the prevailing rate of per diem wages to be posted at each Site, in addition to all other job site notices prescribed by regulation.

16.7.B. Contractor shall forfeit, as a penalty to Owner, Fifty Dollars ($50.00) for each laborer, workman, or mechanic employed in performing labor in and about the Work provided for in the Contract Documents for each Day, or portion thereof, that such laborer, workman or mechanic is paid less than the said stipulated rates for any Work done under the Contract Documents by him or her or by any Subcontractor under him or her, in violation of Articles 1 and 2 of Chapter 1 of Part 7 of Division II of the California Labor Code. The sums and amounts which shall be forfeited pursuant to this paragraph 16.7.B and the terms of the Labor Code shall be withheld and retained from payments due to Contractor under the Contract Documents, pursuant to this Document 00700 and the Labor Code, but no sum shall be so withheld, retained or forfeited except from the final payment without a full investigation by either the State Department of Industrial Relations or by Owner. The Labor Commissioner pursuant to Labor Code Section 1775 shall determine the final amount of forfeiture.

16.7.C. Contractor shall insert in every subcontract or other arrangement which Contractor may make for performance of Work or labor on Work provided for in the Contract, provision that Subcontractor shall pay persons performing labor or rendering service under subcontract or other arrangement not less than the general prevailing rate of per diem wages for work of a similar character in the locality in which the Work is performed, and not less than the general prevailing rate of per diem wages for holiday and overtime work fixed in the Labor Code.

16.7.D. Contractor stipulates that it shall comply with all applicable wage and hour laws, including without limitation Labor Code Sections 1725.5, 1776, and 1811.

16.7.E. This project is subject to compliance monitoring and enforcement by the Department of Industrial Relations. Contractor shall furnish and shall require all subcontractors to furnish the records specified in Labor Code section 1776 (e.g. electronic certified payroll records) directly to the Labor Commissioner in a format prescribed by the Labor Commissioner at least monthly.

16.7.F. Contractor and all Subcontractors shall be registered and qualified to perform public work pursuant to Labor Code section 1725.5 as a condition to engage in the performance of any Work hereunder.

16.7.G. Contractor and Subcontractors must keep accurate payroll records, showing the name, address, social security number, Work classification, straight time and overtime hours worked each Day and week, and the actual per diem wages paid to each journeyman, apprentice, worker, or other employee employed by him or her in connection with the Work of the Contract documents. Each payroll record shall contain or be verified by a written declaration as required by Labor Code Section 1776.

16.7.H. The payroll records enumerated above must be certified and shall be available for inspection at all reasonable hours at the principal office of Contractor as required by Labor Code Section 1776.

1. Contractor shall inform Owner of the location of records enumerated above, including the street address, city and county, and shall, within five working Days, provide a notice of a change of location and address.
2. Contractor or Subcontractor has 10 Days in which to comply subsequent to receipt of a written notice requesting the records enumerated above. In the event that Contractor or Subcontractor fails to comply with the ten-Day period, he or she shall, as a penalty to Owner on whose behalf the contract is made or awarded, forfeit $100.00 for each calendar Day, or portion thereof, for each worker, until strict compliance is effectuated. Upon the request of the Division of Apprenticeship Standards or the Division of Labor Standards Enforcement, these penalties shall be withheld from Progress Payments then due. Contractor is not subject to a penalty assessment pursuant to this subparagraph due to the failure of a Subcontractor to comply with this subparagraph.

16.7.I. Contractor shall also deliver certified payrolls to Owner with each Application for Payment as described in Section 01200 (Payment Procedures).

**16.8 Environmental Controls**

16.8.A. Contractor shall comply with all rules, regulations, ordinances, and statutes that apply to any Work performed under the Contract Documents including, without limitation, any toxic, water, storm water management, and soil pollution controls and air pollution controls specified in Government Code Section 11017. Contractor shall be responsible for insuring that Contractor's Employees, Subcontractors, and the public are protected from exposure to airborne hazards or contaminated water, soil, or other toxic materials used during or generated by activities on the Site or associated with the Project.

**16.9 Shoring Safety Plan**

16.9.A. Any conflict between this paragraph 16.9 and Division 2 of the Specifications shall be resolved in favor of the most stringent requirement.

16.9.B. At least five Days in advance of any excavation five feet or more in depth, Contractor shall submit to Owner a detailed plan showing the shoring, bracing and sloping design (including calculations) and other provisions to be made for worker protection from the hazard of caving ground during the excavation, as required by Labor Code Section 6705. A civil or structural engineer registered in California shall prepare and sign any plan that varies from the shoring system standards established by the State Construction Safety Orders.

16.9.C. During the course of Work, Contractor shall be responsible for determining where sloping, shoring, and/or bracing is necessary and the adequacy of the design, installation, and maintenance of all shoring and bracing for all excavation, including any excavation less than five feet in depth. Contractor will be solely responsible for any damage or injuries that may result from excavating or trenching. Owner's acceptance of any drawings showing the shoring or bracing design or Work schedule shall not relieve Contractor of its responsibilities under this paragraph 16.9.

16.9.D. Appoint a qualified supervisory employee who shall be responsible to determine the sloping or shoring system to be used depending on local soil type, water table, stratification, depth, etc.

END OF DOCUMENT

DOCUMENT 00800

# SUPPLEMENTARY CONDITIONS

## 1. SUMMARY

A. This document includes requirements that supplement the paragraphs of Document 00700 (General Conditions).

## 2. SUPPLEMENTS

A. Supplement to paragraph 4.2:

4.2.A. General.

1. Contractor shall maintain and shall require all of its subcontractors and other agents to maintain the insurance listed below. Contractor shall not commence Work, nor allow its employees, subcontractors or anyone to commence Work until the required insurance has been submitted and approved by Owner and a Notice to Proceed has been issued. Any requirement for insurance to be maintained after completion of the Work shall survive this Agreement.
2. Owner reserves the right to review any and all of the required insurance policies and/or endorsements, but has no obligation to do so. Failure to demand evidence of full compliance with the insurance requirements set forth in this Contract or failure to identify any insurance deficiency shall not relieve Contractor from, nor be construed or deemed a waiver of, its obligation to maintain the required insurance at all times during the performance of this Contract.

4.2.B. Contractor - Required Insurance.

1. At or before the date specified in Document 00510 (Notice of Award), Contractor shall furnish to Owner satisfactory proof that Contractor has obtained the following insurance as specified below:
   a. Workers Compensation Insurance & Employers Liability Insurance.
      1) Workers Compensation insurance with statutory limits as required by the Labor Code of the State of California.
      2) Employers Liability with minimum limits of $1,000,000 per Accident; $1,000,000 Disease per employee; $1,000,000 Disease per policy.
      3) The policy shall be endorsed to include a written waiver of the insurer's right to subrogate against Owner.
      4) Required Evidence of Insurance:
         (a) Subrogation waiver endorsement, and
         (b) Certificate of Insurance.
      5) If injury occurs to any employee of Contractor, Subcontractor, or sub-subcontractor for which the employee, or the employee's dependents in the event of employee's death, is entitled to compensation from Owner under provisions of the Workers Compensation Insurance and Safety Act (Act), as amended, or for which compensation is claimed from Owner, Owner may retain out of sums due Contractor under Contract Documents, amount sufficient to cover such compensation, as fixed by the Act, as amended, until such compensation is paid, or until it is determined that no compensation is due. If Owner is compelled to pay compensation, Owner may, in its discretion, either deduct and retain

from the Contract Sum the amount so paid, or require Contractor to reimburse Owner.

b. General Liability Insurance.
   1) Commercial General Liability Insurance on a standard occurrence form, no less broad than ISO form CG 00 01.
   2) Minimum Limits. The required limits may be provided by a combination of General Liability Insurance and Commercial Umbrella Liability Insurance. If Contractor maintains higher limits than the specified minimum limits, Owner requires and shall be entitled to coverage for the higher limits maintained by Contractor.
      (a) Projects under $1,000,000: $1,000,000 per Occurrence; $2,000,000 General Aggregate; $2,000,000 Products/Completed Operations Aggregate. The General Aggregate shall apply separately to each Project.
      (b) Projects from $1,000,000 - $4,999,999: $2,000,000 per Occurrence; $4,000,000 General Aggregate; $4,000,000 Products/Completed Operations Aggregate. The General Aggregate shall apply separately to each Project.
      (c) Projects from $5,000,000 - $9,999,999: $5,000,000 per Occurrence; $5,000,000 General Aggregate; $5,000,000 Products/Completed Operations Aggregate. The General Aggregate shall apply separately to each Project.
      (d) Projects $10,000,000 and Over: Minimum Limits: $10,000,000 per Occurrence; $10,000,000 General Aggregate; $10,000,000 Products/Completed Operations Aggregate. The General Aggregate shall apply separately to each Project.
   3) Any deductible or self-insured retention shall be shown on the Certificate of Insurance. If the deductible or self-insured retention exceeds $25,000 it must be approved in advance by Owner. Contractor is responsible for any deductible or self-insured retention and shall fund it upon Owner's written request, regardless of whether Contractor has a claim against the insurance or is named as a party in any action involving Owner.
   4) Insurance shall be maintained for the entire period of the Work and for the duration of Contractor's Guaranty Period specified in Document 00630 (Guaranty). Completed operations insurance shall be maintained beyond the Guaranty Period as specified below:
      (a) Projects under $1,000,000: One (1) year after end of Guaranty Period.
      (b) Projects from $1,000,000 - $4,999,999: Two (2) years after end of Guaranty Period.
      (c) Projects from $5,000,000 - $9,999,999: Three (3) years after end of Guaranty Period.
      (d) Projects $10,000,000 and Over: Five (5) years after end of Guaranty Period.
   5) Owner, its Board of Directors, and its employees, representatives, consultants, and agents; and Sonoma County Water Agency, its employees, representatives, consultants, and agents; County of Sonoma and its officers, employees, consultants, representatives, and agents; shall be additional insureds for liability arising out of ongoing <u>and</u> completed

operations by or on behalf of the Contractor in the performance of the Contract Documents. Additional insureds status shall continue for the period(s) specified in paragraph 4.2.B.1.b.4 above.

6) The policy definition of "insured contract" shall include assumptions of liability arising out of both ongoing operations and the products-completed operations hazard (broad form contractual liability coverage including the "f" definition of insured contract in ISO form CG 00 01, or equivalent).
7) The insurance provided to the additional insureds shall be primary to, and non-contributory with, any insurance or self-insurance program maintained by Owner *et al.*
8) The policy shall not exclude injury or damage caused by, or resulting from, explosion, collapse and/or underground hazards.
9) The policy shall not contain a Contractors' Warranty or other similar language which eliminates or restricts insurance because of a Subcontractor's failure to carry specific insurance or to supply evidence of such insurance.
10) The policy shall be endorsed to include a written waiver of the insurer's right to subrogate against all persons or entities that are, or are required to be, additional insureds.
11) The policy shall cover inter-insured suits between Contractor and the additional insureds and shall include a "separation of insureds" or "severability" clause which treats each insured separately.
12) Required Evidence of Insurance:
    (a) Additional insured endorsements or policy language granting additional insured status;
    (b) Endorsement or policy language indicating that insurance is primary and non-contributory; and
    (c) Certificate of Insurance.

c. Automobile Liability Insurance.
1) Minimum Limits:
    (a) Projects under $1,000,000: $1,000,000 combined single limit per accident.
    (b) Projects $1,000,000 and Over: $2,000,000 combined single limit per accident.
2) Insurance shall apply to all owned, hired, and non-owned vehicles.
3) Owner, its Board of Directors, and its employees, representatives, consultants, and agents; and Sonoma County Water Agency, its employees, representatives, consultants, and agents; shall qualify as an insured.
4) Insurance shall be maintained for the entire term of this Contract, including any Guaranty Period.
5) Required Evidence of Insurance:
    (a) Endorsement or policy language indicating that Owner, its Board of Directors, and its employees, representatives, consultants, and agents; and Sonoma County Water Agency, its employees, representatives, consultants, and agents; are insureds; and
    (b) Certificate of Insurance.

d. Contractors Pollution Liability Insurance.
   1) Minimum Limits:
      (a) Projects under $5,000,000: $1,000,000 per pollution Incident; $1,000,000 Aggregate; and
      (b) Projects $5,000,000 and Over: $2,000,000 per pollution Incident; $2,000,000 Aggregate.
   2) Any deductible or self-insured retention shall be shown on the Certificate of Insurance. If the deductible or self-insured retention exceeds $25,000 it must be approved in advance by Owner. Contractor is responsible for any deductible or self-insured retention and shall fund it upon Owner's written request, regardless of whether Contractor has a claim against the insurance or is named as a party in any action involving Owner.
   3) If the insurance is on a Claims-Made basis, the retroactive date shall be no later than the commencement of Work.
   4) Insurance shall be maintained for the entire period of the Work and for the duration of Contractor's Guaranty Period specified in Document 00630 (Guaranty), plus the additional periods as specified below:
      (a) Projects under $1,000,000: One (1) year after end of Guaranty Period.
      (b) Projects from $1,000,000 - $4,999,999: Two (2) years after end of Guaranty Period.
      (c) Projects from $5,000,000 - $9,999,999: Three (3) years after end of Guaranty Period.
      (d) Projects $10,000,000 and Over: Five (5) years after end of Guaranty Period.
   5) If the insurance is on a Claims-Made basis, the continuation coverage may be provided by: (a) renewal of the existing policy; (b) an extended reporting period endorsement; or (c) replacement insurance with a retroactive date no later than the commencement of the Work.
   6) Owner, its Board of Directors, County of Sonoma and its officers, employees, consultants, representatives, and agents; and Sonoma County Water Agency, its employees, representatives, consultants, and agents; shall be additional insureds for liability arising out of operations by or on behalf of the Contractor in the performance of the Contract Documents.
   7) The insurance provided to the additional insureds shall apply on a primary and non-contributory basis with respect to any insurance or self-insurance program maintained by Owner *et al.*
   8) Required Evidence of Insurance:
      (a) Additional insured endorsement or policy language granting additional insured status;
      (b) Endorsement or policy language indicating that coverage is primary and non-contributory; and
      (c) Certificate of Insurance.

e. Professional Liability/Errors & Omissions Insurance.
   1) Required if the Contractor or its employees engage in design or professional activities (architecture, engineering or surveying) that are not subcontracted out.
   2) Minimum Limit: $1,000,000 per claim or per occurrence.

3) Any deductible or self-insured retention shall be shown on the Certificate of Insurance. If the deductible or self-insured retention exceeds $25,000 it must be approved in advance by Owner.
4) If the insurance is on a Claims-Made basis, the retroactive date shall be no later than the commencement of the Work.
5) Insurance applicable to the Work performed under the Contract shall be continued for two (2) years after completion of the Work. Such continuation insurance may be provided by one of the following: (a) renewal of the existing policy; (b) an extended reporting period endorsement; or (c) replacement insurance with a retroactive date no later than the commencement of the Work.
6) Required Evidence of Insurance:
   (a) Certificate of Insurance.

2. Increase of Minimum Limits.
   a. Required minimum amounts of insurance may be increased should conditions of Work, in opinion of Owner, warrant such increase. Contractor shall increase required insurance amounts upon direction by Owner.
3. Standards for Insurance Companies.
   a. Insurers, other than the California State Compensation Insurance Fund, shall have an A.M. Best's rating of at least A:VII.
4. Documentation.
   a. The Certificate of Insurance shall include the following reference: 70-712-7 #7.
   b. Contractor agrees to maintain current Evidence of Insurance on file with Owner for the periods of insurance specified above in Paragraphs 4.2.B.1.a through 4.2.B.1.e. Any requirement to maintain insurance after Final Completion of the Work, including providing Certificates evidencing required insurance, shall survive the Contract.
      1) Required Evidence of Insurance shall be submitted to Sonoma Valley County Sanitation District, c/o Sonoma County Water Agency, 404 Aviation Boulevard, Santa Rosa, CA 95403-9019.
      2) Required Evidence of Insurance shall be submitted for any renewal or replacement of a policy that already exists, at least ten (10) days before expiration or other termination of the existing policy.
      3) Contractor shall provide immediate written notice if: (a) any of the required insurance policies is terminated; (b) the limits of any of the required policies are reduced; or (c) the deductible or self-insured retention is increased.
      4) Upon written request, certified copies of required insurance policies must be provided within thirty (30) days.
5. Policy Obligations
   a. Contractor's indemnity and other obligations shall not be limited by the foregoing insurance requirements.
6. Material Breach.
   a. If Contractor fails to maintain Insurance which is required pursuant to the Contract Documents, it shall be deemed a material breach. Owner, at its sole option, may terminate the Contract for default and obtain damages from Contractor resulting from said breach. Alternatively, Owner may purchase the required Insurance, and without further notice to Contractor, Owner may

deduct from sums due to Contractor any premium costs advanced by Owner for such insurance. These remedies shall be in addition to any other remedies available to Owner under the Contract Documents or Law.

4.2.C. Subcontractors - Required Insurance.

1. With respect to their portion of the Work, Subcontractors of all tiers shall maintain the same insurance required to be maintained by Contractor with limits as follows:
   a. Minimum General Liability Limits for Framing, Mechanical, and Electrical Subcontractors.
      1) Projects under $1,000,000: $1,000,000 per Occurrence; $2,000,000 General Aggregate; $2,000,000 Products/Completed Operations Aggregate. The General Aggregate shall apply separately to each Project.
      2) Projects $1,000,000 and Over: $2,000,000 per Occurrence; $4,000,000 General Aggregate; $4,000,000 Products/Completed Operations Aggregate. The General Aggregate shall apply separately to each Project.
   b. Minimum General Liability Limits for all Subcontractors other than Framing, Mechanical, and Electrical Subcontractors.
      1) $1,000,000 per Occurrence; $2,000,000 General Aggregate; $2,000,000 Products/Completed Operations Aggregate. The General Aggregate shall apply separately to each Project.
   c. Minimum Automobile Liability Limits.
      1) $1,000,000 combined single limit per accident.
   d. Minimum Employers Liability Limits.
      1) $1,000,000 per Accident; $1,000,000 Disease per employee; $1,000,000 Disease per policy.
   e. Professional Liability/Errors & Omissions Insurance.
      1) Required for any architect, engineer, surveyor or other licensed professional engaged by Contractor to perform portions of the Work.
      2) Minimum Limit: $1,000,000 per claim or per occurrence.
      3) Any deductible or self-insured retention shall be shown on the Certificate of Insurance. If the deductible or self-insured retention exceeds $25,000 it must be approved in advance by Owner.
      4) If the insurance is on a Claims-Made basis, the retroactive date shall be no later than the commencement of the Work.
      5) Coverage applicable to the Work performed under the Contract shall be continued for two (2) years after completion of the Work. Such continuation coverage may be provided by one of the following: (a) renewal of the existing policy; (b) an extended reporting period endorsement; or (c) replacement insurance with a retroactive date no later than the commencement of the Work.
      6) Required Evidence of Insurance:
         (a) Certificate of Insurance.

4.2.D. Builder's Risk.

1. With respect to Work under this Contract, Owner shall maintain "All-Risk" Course of Construction insurance as follows:
   a. Insured Property shall include: (1) Real property in Course of Construction; (2) building materials and supplies intended to be in or on the completed Work located at the Site, in storage or in transit, and whether or not owned or

paid for by Owner; (3) fixtures and machinery intended to be in or on the completed Work; (4) scaffolding, cribbing, fencing, forms and temporary trailers, while located on the Site, in storage or in transit.

b. Limit of insurance shall be the full contract value.

c. Responsibility for paying deductibles is as follows:

| ***Contract Value or Description*** | ***Contractor's Responsibility for Deductible: Earthquake and Flood*** | ***Contractor's Responsibility for Deductible: Other Insured Perils*** | ***Owner's Responsibility for Deductible*** |
|---|---|---|---|
| Full Contract Value under $1,000,000 | First $10,000 | First $5,000 | Balance of Deductible |
| Full Contract Value: $1,000,000 - $9,999,999 | First $20,000 | First $10,000 | Balance of Deductible |
| Full Contract Value: $10,000,000 - $19,999,999 | First $50,000 | First $25,000 | Balance of Deductible |
| Full Contract Value: $20,000,000 and above | First $60,000 | First $30,000 | Balance of Deductible |

d. Contractor and Subcontractors of all tiers shall be additional insureds.

e. Excluded property: Equipment, tools, and personal effects belonging to Contractor or Subcontractors of all tiers.

f. Insured perils: All Risks of Direct Physical Damage or Loss, including flood and, for scheduled locations, earthquake, except as excluded.

g. Exclusions may include, but are not limited to:
   1) Loss due to wear and tear, moth, vermin, termites, insects, latent defects, gradual deterioration, wet or dry rot, rust, corrosion, erosion or normal settling, shrinkage and/or expansion of buildings or foundations.
   2) Loss or damage due to contaminants and/or pollutants. However, fire losses arising directly or indirectly from pollutants or contaminants are covered.
   3) Loss of use or occupancy or consequential loss.
   4) Liquidated damages and/or penalties for delay or detention in connection with guarantees of performance or efficiency.
   5) Loss or damage caused by or resulting from infidelity or dishonesty on the part of any insured or the employees or agents of any insured.
   6) Inventory shortage or unexplained disappearance.

h. A copy of Owner's Course of Construction Insurance, including all policy coverages, conditions and exclusions, shall control in the event of any conflict with the language of this Document 00700. Upon request, Owner will provide a Certificate of Property Insurance.

END OF DOCUMENT

DOCUMENT 00805

# SUPPLEMENTARY CONDITIONS - HAZARDOUS MATERIALS

## 1. SUMMARY

A. This Document 00805 includes requirements that supplement the paragraphs of Document 00700 (General Conditions) as they apply to location, removal, remediation, disposal, and abatement of hazardous materials and hazardous waste.

## 2. SUPPLEMENTS

A. Supplement to paragraph 2.1, Investigation Prior to Bidding
   1. Add a new paragraph that reads:
      2.1.B.4. Information Shown in Hazardous Materials Documentation for Informational Purposes: Reference is made to Document 00335 (Hazardous Materials Documentation) for hazardous material documentation included with the Contract Documents and use of data therein. These documents are not Contract Documents and, except for any "technical data" regarding the location of hazardous materials, as limited in Document 00335 (Hazardous Materials Documentation), Contractor shall not in any manner rely on the information in these documents. Subject to the foregoing, Contractor shall make its own independent investigation of all conditions affecting the Work and shall not rely on information provided by Owner.

B. Supplement to paragraph 5.7, Precedence of Documents
   1. Add a new paragraph that reads:
      5.7.E Should any provision or requirement of any Contract Document conflict with another provision or requirement in the Contract Documents on subject matters of hazardous waste abatement, clean up, disposal, or required safety standards or methods, then the most stringent provision or requirement shall control.

C. Supplement to paragraph 7.2, Means and Methods of Construction
   1. Add a new paragraph that reads:
      7.2.B Nothing contained in these Contract Documents or inferable therefrom shall be deemed or construed to:
         1) Make Contractor the agent, servant, or employee of Owner; or
         2) Create any partnership, joint venture, or other association between Owner and Contractor.

D. Supplement to paragraph 8, Control of the Work
   1. Add new paragraphs that read:
      8.2.F Owner shall exercise administration on Contract Documents. If Owner has employed a HazMat Consultant, Owner reserves the right to assign or delegate to this consultant, or any other consultant, any or all Engineer's responsibilities under Contract Documents or alternatively to act as Owner's Representative. Contractor will be notified in writing of any such delegation.
      8.2.G Cooperate with HazMat Consultant as directed by Owner. HazMat Consultant's duties may include observing Contractor's health and safety program and practices, observing the abatement construction activities, observing the extent of material removed from each job Site, reviewing payment requests, reviewing reports required by governmental or quasi-governmental agencies or Contract

Documents, and providing clearance tests after abatement is completed. No action, omission to act, approval, or failure to advise Contractor as to any matter by HazMat Consultant shall in any way relieve Contractor from its responsibility for the performance of Work in accordance with Contract Documents and applicable law. Unless directed otherwise in writing by Owner, do not communicate directly with HazMat Consultant and direct all communications to Owner.

E. Supplement to paragraph 9, Warranty, Guaranty, and Inspection of Work

1. Add to the end of paragraph 9.1 the following additional representations and warranties:

9.1.D Additional Warranties and Representations:

1) Contractor represents and warrants that it, its employees and its Subcontractors and their employees, shall at all times have the required levels of familiarity with the Site and the Work, training and ability to comply fully with all applicable law and Contract Documents requirements for safe and expeditious performance of the Work, including whatever training is or may be required regarding the activities to be performed (including, but not limited to, all training required to adequately address the actual or potential dangers of Contract performance).
2) Contractor represents and warrants that it, its employees and its subcontractors and their employees, shall at all times have and maintain in good standing any and all certifications and licenses required by applicable federal, state, and other governmental and quasi-governmental requirements applicable to the Work.
3) Contractor represents and warrants that it has studied carefully all requirements of the Contract Documents regarding procedures for demolition, hazardous waste abatement, or safety practices, specified in the Contract Documents, and prior to submitting its Bid, has either:
   (a) Verified to its satisfaction that the specified procedures are adequate and sufficient to achieve the results intended by Contract Documents; or
   (b) By way of approved "or equal" request or request for clarification and written Addenda, secured changes to the specified procedures sufficient to achieve the results intended by Contract Documents.
4) Contractor accepts the risk that any specified procedure will result in a completed Project in full compliance with all Contract Documents requirements.

2. Add a new paragraph to paragraph 9.6 that reads:

9.6.B Owner reserves the right, in its sole discretion, to conduct air monitoring, earth monitoring, Work monitoring, and any other tests (in addition to testing required under Document 00520 [Agreement] or applicable Law), to monitor Contract requirements of safe and statutory compliant work methods and (where applicable) safe re-entry level air standards under state and federal Law upon completion of the Work, and compliance of the Work with periodic and final inspection of public and quasi-public entities having jurisdiction.

1) Contractor acknowledges that Owner also has the right to perform, or cause to be performed, various activities and tests including, but not limited to, pre-abatement, during abatement and post-abatement air monitoring, provided that Owner shall have no obligation to perform said activities and tests, and

that a portion of said activities and tests may take place prior to the completion of Work by Contractor. In the event Owner elects to perform these activities and tests, afford Owner ample access to the Site and all areas of the Work as may be necessary for the performance of these activities and tests. Include the potential impact of these activities for tests by Owner in the Contract Sum and the scheduled completion date.

2) Notwithstanding Owner's rights granted by this paragraph 9, Contractor may be required to retain its own industrial hygiene consultant and shall have primary responsibility for collecting samples and performing all applicable, relevant, or appropriate activities and tests including, but not limited to, pre-abatement, during abatement, and post-abatement air monitoring, required by Contract Documents, applicable Law, or both, and Owner reserves the right to request documentation of all such activities and tests performed by Contractor relating to Work.

F. Supplement to paragraph 11.2, Cost Data

1. Add new paragraphs that read:

11.2.E Obtain and maintain and furnish to Owner on completion of Work or at any other time requested by Owner, all necessary permits, licenses, approvals, authorizations, notifications, training certificates, respirator certificates, reports, correspondence, tests results, air monitoring certificates, forms, medical records, medical certificates, notes and photographs of Work conditions, approved shipping and disposal facility receipts, manifests, and all other documentation required by Contract Documents or applicable Law, or both.

11.2.F Provide Owner with copies of each such document as it is generated and, as a condition to final payment, provide Owner with a complete set of such documents (bound, organized, and indexed) at the conclusion of Work. Keep and maintain in retrievable files true and correct copies of all such documents for a period of not less than 30 years after Final Completion of the Work. Owner shall have the right to inspect or photocopy these records and, if Contractor should cease business operations, then it shall furnish these records to Owner.

G. Supplement to paragraph 13, Legal and Miscellaneous

1. Add new paragraphs to the end of paragraph 13.1 that read:

13.1.C Compliance with Laws. Contractor represents that it is familiar with and shall comply with all Laws applicable to the Work or completed Work including, but not limited to all Laws relating to:

1) Protection of the public health, welfare, and environment;
2) Generation, processing, treatment, handling, storage, transport, disposal, destruction, or other management of Asbestos, PCB, lead, petroleum-based products, or other hazardous materials of any kind; or
3) Protection of environmentally sensitive areas such as wetlands.

13.1.D Disposal. Contractor has the sole responsibility for determining current waste storage, handling, and transportation and disposal regulations for the Site and for each waste disposal facility. Contractor shall comply fully at Contractor's sole cost and expense with these regulations and any applicable Law. Owner may, but is not obligated to, require submittals with this information for it to review consistent with Contract Documents.

13.1.E Tracking. Contractor shall develop and implement a system acceptable to Owner to track hazardous waste from the Site to disposal, including appropriate

"Hazardous Waste Manifests" on the applicable EPA form, so that Owner may track the volume of waste Contractor puts in each landfill and receive from each landfill a certificate of receipt.

13.1.F Facilities. Contractor shall provide Owner with the name and address of each waste disposal facility prior to any disposal, and Owner shall have the express right to reject any proposed disposal facility. Contractor may not use any disposal facility to which Owner has objected. Contractor shall document actual disposal or destruction of waste at a designated facility by completing a disposal certificate or certificate of destruction and forwarding the original to the Contractor (with a copy to Owner).

2. Add new paragraphs to 13.2 that read:

13.2.B Before performing any of the Work, and at such other times as may be required by applicable Law, deliver all requisite notices and obtain the approval of all governmental and quasi-governmental authorities having jurisdiction over the Work. Submit evidence satisfactory to Owner that Contractor and any disposal facility (a) have obtained all required permits, approvals and the like in a timely manner both prior to commencement of the Work and thereafter as and when required by applicable Law, and (b) are in compliance with all such permits, approvals and the like. For example, before commencing any work in connection with the Work involving Asbestos-containing materials or PCB subject to regulation, Contractor shall provide the required notice of intent to renovate or demolish to the appropriate state or federal agency having jurisdiction, by certified mail, return receipt required, or by some other method of transmittal for which a return receipt is obtained, and to send a copy of that notice to Owner. Contractor shall not conduct any Work involving Asbestos-containing materials or PCB unless Contractor has first confirmed that the appropriate agency having jurisdiction is in receipt of the required notification. All permits, licenses, and bonds required by governmental or quasi-governmental authorities, fees, deposits, tap fees, Off Site easements, and Asbestos and PCB disposal facilities necessary for the prosecution of the Work shall be procured and paid for by Contractor. Contractor shall give all notices and comply with the Law bearing on the conduct of the Work as drawn and specified. If Contractor observes or reasonably should have observed that Drawings and Specifications and other Contract Documents are at variance therewith, it shall be responsible for promptly notifying Owner in writing of such fact. If Contractor performs any Work contrary to Law without such notice to Owner, Contractor shall bear all costs arising therefrom.

13.2.C In the case of any permits or notices held in Owner's name or of necessity to be made in Owner's name, Owner will cooperate with Contractor in securing the permit or giving the notice, but Contractor shall prepare for Owner's review and execution upon approval, all necessary applications, notices, and other materials.

3. Add a new paragraph to paragraph 13.3 that reads:

13.3.G To the greatest extent permitted by Law, the indemnities and limitation of liability expressed throughout the Contract Documents apply with equal force and effect to any claims or liabilities imposed or existing by virtue of the removal, abatement, and disposal of hazardous waste. This includes liabilities connected to the selection and use of a waste disposal facility, personal injury, property damage, loss of use of property, damage to the environment or natural

resources, or "disposal" and "release" of materials associated with the Work (as defined in 42 U.S.C. Section 9601 *et seq*).

4. Add a new paragraph following paragraph 13.7.F that reads:

   13.7.G Notwithstanding anything in paragraph 13.7 to the contrary, Owner shall have an absolute right to terminate for default immediately without notice and without an opportunity to cure should Contractor knowingly or recklessly commit a material breach of the terms of the Contract Documents or the Law on any matter involving the exposure of persons or property to hazardous waste. If the breach exposing persons or property to hazardous waste is due solely to an ordinary, unintentional and non-reckless failure to exercise reasonable care, then the procedures in paragraph 13.7 for termination for default shall apply without modification.

H. Supplement to paragraph 16.2, Protection of Work, Persons, and Property

1. Add a new paragraph that reads:

   16.2.F Perform safe, expeditious, and orderly work in accordance with the best practices and the highest standards in the hazardous waste abatement, removal, and disposal industry, the Law (as herein defined), and the Contract Documents including, but not limited to, all responsibilities relating to the preparation and return of waste shipment records, all requirements of the Law, delivering of all requisite notices, and obtaining all necessary governmental and quasi-governmental approvals.

END OF DOCUMENT

DOCUMENT 00910

# ADDENDA

SONOMA VALLEY COUNTY SANITATION DISTRICT, SEWER TRUNK REPLACEMENT
(AGUA CALIENTE CREEK CROSSING)

[DOCUMENT TO BE COMPLETED AS ADDENDA DURING BID PERIOD]

END OF DOCUMENT

# SPECIFICATIONS

# DIVISION 1

# GENERAL REQUIREMENTS

SECTION 01100

**SUMMARY**

## PART 1 GENERAL

### 1.1 SUMMARY

A. Section includes:
   1. Summary of Work and Work Restrictions including:
      a. Summary
      b. Submittals
      c. Work Covered By Contract Documents
      d. Bid Items, Allowances, and Alternates
      e. Work Under Other Contracts
      f. Future Work
      g. Work Sequence
      h. Work Days and Hours
      i. Shutdown for Discovery of Cultural Resources
      j. Cooperation of Contractor and Coordination with Other Work
      k. Partial Occupancy/Utilization Requirements
      l. Contractor Use of Site
      m. Air Quality Standards
      n. Construction Staking and Monument Protection
      o. Protection of Existing Structures and Underground Facilities
      p. Permits
      q. Actual Damages
      r. Rights-of-Way
      s. Document Tracking
      t. Products Ordered In Advance
      u. Owner-Furnished Products

### 1.2 SUBMITTALS

A. Work Plans:
   1. Utility Protection Plan

### 1.3 WORK COVERED BY CONTRACT DOCUMENTS

A. Work comprises construction of Owner's sewer trunk main replacement crossing Agua Caliente Creek, Sonoma County, California including without limitation replacement of approximately 620 linear feet of 21-inch sewer trunk main north of Maxwell Farms Regional Park within public right-of-ways and within easements on private property outside the limits of the City of Sonoma, from Old Maple Avenue across Agua Caliente Creek to Buena Vida Drive. The Work includes, but is not limited to, removal, abandonment, and realignment of approximately 620 linear feet of existing 21-inch sewer trunk main and appurtenances, including removal of the above channel crossing of Agua Caliente Creek. Work additionally includes construction of approximately 639 linear feet of 30-inch fused high density Polyethylene (HDPE) pipe and appurtenances, 239 linear feet each of 24-inch and 12-inch fused HDPE siphon pipes and appurtenances, 133 linear feet each of 36-inch and 24-inch pipe rammed method steel casings under Agua Caliente Creek, 327 linear feet

of 36-inch guided bore method steel casings, two precast siphon structures, ten manholes, the removal or abandonment and replacement or two existing lateral sewers, one potable well abandonment, two water service connections, roadway resurfacing, all-weather vehicle access surfacing, and other miscellaneous appurtenances. Contract Documents fully describe the Work.

B. The Work of this Contract comprises construction of all the Work indicated, described in the Specifications, or otherwise required by the Contract Documents.
C. Unless provided otherwise in the Contract Documents, all risk of loss to Work covered by Contract Documents shall rest with Contractor until Final Acceptance of the Work.
D. Cost of maintenance of systems and equipment prior to Final Acceptance will be considered as included in prices Bid and no direct or additional payment will be made therefor.

## 1.4 BID ITEMS, ALLOWANCES, AND ALTERNATES

A. Any Bid item may be deleted from the Work and Contract Sum, in total or in part, prior to or after award of Contract without compensation in any form or adjustment of other Bid items or prices therefore.
B. Payment of all items is subject to provisions of Contract Documents, including without limitation Section 01200 (Price and Payment Procedures).
C. For all Bid items, furnish and install all Work, including connections to existing systems, indicated and described in Specifications and all other Contract Documents. Work and requirements applicable to each individual Bid item, or unit of Work, shall be deemed incorporated into the description of each Bid item (whether Lump Sum or Unit Price).
D. Bid item descriptions (listed by Bid item number):
   1. Bonds. The lump sum price paid under this item shall be full payment for furnishing bonds as required by Document 00700 (General Conditions) as required by Document 00200 (Instructions to Bidders).
   2. Insurance. The lump sum price paid under this item shall be full payment for furnishing insurance as required by Document 00700 (General Conditions).
   3. Safety Program and Implementation. The lump sum price paid under this item shall be full payment for furnishing and implementing the Safety Program as required by Section 01540 (Site Security and Safety) and Document 00700 (General Conditions).
   4. Construction Material Waste Management Plan and Implementation. The lump sum price paid under this item shall be full payment for furnishing and implementing the Construction Material Waste Management Plan as required by Section 01741 (Construction Material Waste Management Plan).
   5. Storm Water Pollution Prevention Plan and Implementation. The lump sum price paid under this item shall be full payment for furnishing and implementing the Storm Water Pollution Prevention Plan as required by Section 01500 (Temporary Facilities and Controls).
   6. Mobilization/Demobilization. The lump sum price paid under this item shall be full payment for initial mobilization at Project commencement (50 percent to be paid then), and cleanup and demobilization at Final Completion (50 percent to be paid then).
   7. Sheet Piling, Shoring, and Bracing. The lump sum price paid under this item shall be full payment for providing and removing temporary sheet piling, shoring and bracing for underground pipeline and structure Work.
   8. Traffic Control Plan and Implementation. The lump sum price paid under this item shall be full payment for furnishing the County-approved Traffic Control Plan; compliance with the American's With Disabilities Act (ADA); providing temporary traffic signs,

traffic cones, striping, signage, delineators, K-rails, cones, and incidentals required to temporarily control, detour, or stage traffic during construction; providing replacement of permanent traffic control striping, delineators, painted signage removed or damaged by the Work; and all other related Work.

9. Project Identification Signs. The unit price paid under this item shall be the full payment for providing Project Identification Signs. For purposes of payment, this item will be measured by the unit for each project identification sign installed.
10. Guided Bore Plan Preparation. The lump sum price paid under this item shall be full payment for furnishing the Owner-approved Guided Bore Plan.
11. Pipe Ramming Plan Preparation. The lump sum price paid under this item shall be full payment for furnishing the Owner-approved Pipe Ramming Plan.
12. Dewatering Plan Preparation. The lump sum price paid under this item shall be full payment for furnishing the Owner-approved Dewatering Plan.
13. Site Clearing. The lump price sum paid under this item shall be full payment for providing site clearing as needed throughout the Work area, including stripping and stockpiling of topsoil from excavations and the removal of material not designed for replacement.
14. Relocate Existing Utilities. The lump sum price paid under this item shall be full payment for relocation of the existing telephone service pedestal splice box as indicated on Old Maple Avenue.
15. Dewatering Plan Implementation. The lump sum price paid under this item shall be full payment for implementing the Dewatering Plan.
16. Sewer Diversion and Bypass Pumping Plan and Implementation. The lump sum price paid under this item shall be full payment for furnishing and implementing the Sewer Diversion and Bypass Pumping Plan, including all necessary measures to temporarily divert and continuously pump raw sewage between manholes, across Agua Caliente Creek, and around the Work.

Note: Bid Item Numbers 17 through 59 include, but are not limited to:

- Furnishing and implementing Asbestos Cement Pipe (ACP) Plan
- Furnishing and implementation of Utility Support Plan including, but not limited to, water main and water valves support at crossings
- Furnishing and implementation of water main isolation, depressurization, repair, valve replacement, and disinfection work plan associated with sewer facilities Work
- Existing improvements protection
- Providing pipe and fittings
- Locating side sewer prior to making connection to the existing side sewer
- Pipe laying
- Saw-cutting
- Excavation and disposal of materials including, but not limited to, existing ACP, asphalt pavement, aggregate road base materials, pipe trench aggregate and concrete backfill materials, pipe bedding materials, other trench spoils, and pipe fittings
- Removal of existing fencing, providing temporary fencing, and re-constructing existing fencing and/or replacing existing fencing with new fencing
- Providing, removing, and disposing of temporary plastic safety fencing and stakes

- Providing pipe bedding
- Providing trench drain rock
- Providing temporary and permanent connections
- Providing tracer wire as required
- Providing trench backfill
- Providing connections to existing sewer manholes or water pipes
- Providing geotextile fabric
- Compaction
- Control of grades
- Trench dams
- Tree Protection Plan preparation & implementation
- Plugs as required
- Necessary testing
- Temporary paving and trench plating
- Aggregate base material
- Type A asphalt concrete pavement trench resurfacing
- Type B and Type C trench resurfacing
- Asphalt pavement restoration
- Video inspection
- Roadway restriping
- Removal, disposal, and replacement of concrete curbs, gutters, sidewalks, driveways, and valley gutters for sewer replacements
- Roadway raised pavement markers and painting
- Coordinating through Owner with Valley Of The Moon Water District
- Coordinating with Owner for referencing, replacing, or restoring property or right-of-way monuments(s) and survey control points(s)

17. 1-inch Water Service for 154 Fairview Lane. The lump sum paid under this item shall be full payment for providing a 1-inch diameter water service, including fittings, meter box and lid, curb stop, meter; disconnection from existing well and capping of well connection; connection to building water service piping, removal, disposal, and replacement of asphalt and aggregate base driveway structural section surfacing as required; making application to Valley of the Moon Water District (VOMWD) for connection and payment of connection fee; and coordinating with private property owner and VOMWD through Owner for making application for water service, VOMWD inspections, and VOMWD hot-tapping of existing water main. For the purposes of payment, 10 percent (in addition to any other retention) to be retained and paid after testing.
18. 1-inch Water Service for 157 Fairview Lane. The lump sum price paid under this item shall be full payment for providing a 1-inch diameter water service including fittings, meter box and lid, curb stop, meter; disconnection from existing well and capping of well connection; connection to building water service piping, removal, disposal, and replacement of aggregate base driveway surfacing as required; making application to VOMWD for connection and payment of connection fee; and coordinating with parcel owner and VOMWD through Owner for making application for water service, VOMWD inspections, and VOMWD hot-tapping of existing water main. For the purposes of

payment, 10 percent (in addition to any other retention) to be retained and paid after testing.

19. Abandon Existing 4-inch Side Sewer and Provide New 6-Inch PVC Side Sewer. The lump sum price paid under this item shall be full payment for abandoning side sewer in-place, including excavation, provision of fill and vent pipes, plugging of opening, filling with cellular concrete, provision of compacted trench backfill to grade, and providing a new 6-inch PVC side sewer including connection to the existing 4-inch side sewer, cleanouts, backflow preventer, and a connection to new Siphon Structure "B", including bends, increaser, wyes, pipe, flexible rubber couplings, double water stop, tracer wire, tracer wire box, excavation, bedding, compacted trench backfill, and trench resurfacing, and all other related Work. For purposes of payment, this item will be measured by the unit for each side sewer abandoned and provided new, with 10 percent (in addition to any other retention) to be retained and paid after testing.
20. Remove Existing and Provide New 4-inch Lateral Sewer. The lump sum price paid under this item shall be full payment for removing existing 4-inch lateral sewer and providing a new 4-inch PVC lateral sewer including cleanout, tracer wire, plugs, bends, wyes, connecting to existing sewer main, pipe, flexible rubber couplings, and all other related Work. For purposes of payment, this item will be measured by the unit for each lateral sewer removed and provided new, with 10 percent (in addition to any other retention) to be retained and paid after testing.
21. 6-inch Diameter PVC Sewer Main. The unit price paid under this item shall be full payment for 6-inch PVC sewer pipe. For purposes of payment, this item will be measured by the linear foot of sewer main installed along the longitudinal axis, to inside edge of manhole if not laid through manhole, or to centerline of manhole if laid through manhole with 10 percent (in addition to any other retention) to be retained and paid after testing.
22. 8-inch Diameter PVC Sewer Main. The unit price paid under this item shall be full payment for providing 8-inch diameter PVC sewer main pipe. For purposes of payment, this item will be measured by the linear foot of sewer main installed along the longitudinal axis, to inside edge of manhole if not laid through manhole, or to centerline of manhole if laid through manhole, with 10 percent (in addition to any other retention) to be retained and paid after testing.
23. 12-inch Outside Diameter Fused SDR 17 HDPE Siphon Pipe (Open Trenched). The unit price paid under this item shall be full payment for providing 12-inch outside diameter fused SDR 17 HDPE Siphon Pipe using open trench method, including flexible 2-ball expansion joints, with 10 percent (in addition to any other retention) to be retained and paid after testing. For purposes of payment, this item will be measured by the linear foot of pipe installed along the longitudinal axis, from the end of casing to the inside edges of siphon structures "A" and "B."
24. 12-inch Outside Diameter Fused SDR 17 HDPE Siphon Pipe (Jacked through Casing). The unit price paid under this item shall be full payment for providing 12-inch outside diameter fused SDR 17 HDPE Siphon Pipe by jacking through casing, with 10 percent (in addition to any other retention) to be retained and paid after testing, and including fused wall anchors and fused flange adapters. For purposes of payment, this item will be measured by the linear foot of pipe installed along the longitudinal axis by jacking through casing, from end of casing to end of casing.
25. 24-inch Outside Diameter Fused SDR 17 HDPE Siphon Pipe (Open Trenched). The unit price paid under this item shall be full payment for providing 24-inch outside diameter

fused SDR 17 HDPE Siphon Pipe using open trench method, including flexible 2-ball expansion joints, with 10 percent (in addition to any other retention) to be retained and paid after testing. For purposes of payment, this item will be measured by the linear foot of pipe installed along the longitudinal axis, from the end of casing to the inside edges of siphon structures "A" and "B."

26. 24-inch Outside Diameter Fused SDR 17 HDPE Siphon Pipe (Jacked through Casing). The unit price paid under this item shall be full payment for providing 24-inch outside diameter fused SDR 17 HDPE Siphon Pipe by jacking through casing, with 10 percent (in addition to any other retention) to be retained and paid after testing. For purposes of payment, this item will be measured by the linear foot of pipe installed along the longitudinal axis by jacking through casing, from end of casing to end of casing.
27. 30-inch Outside Diameter Fused SDR 41 HDPE Siphon Pipe (Open Trenched). The unit price paid under this item shall be full payment for providing 30-inch outside diameter fused SDR 41 HDPE Siphon Pipe using open trench method, with 10 percent (in addition to any other retention) to be retained and paid after testing. For purposes of payment, this item will be measured by the linear foot of pipe installed along the longitudinal axis, from the end of casing to inside edge of manhole or siphon structure where not laid through manhole or structure, or from end of casing to centerline of manhole where laid through manhole.
28. 30-inch Outside Diameter Fused SDR 41 HDPE Siphon Pipe (Jacked through Casing). The unit price paid under this item shall be full payment for providing 30-inch outside diameter fused SDR 41 HDPE Siphon Pipe using open trench method, with 10 percent (in addition to any other retention) to be retained and paid after testing. For purposes of payment, this item will be measured by linear foot along the longitudinal axis of pipe installed by jacking through casing, from end of casing to end of casing.
29. Pipe Ramming 24-inch Outside Diameter Steel Casing. The unit price paid under this item shall be the full payment for providing pipe ramming 24-inch steel cylinder encasement including preparation of the ramming pit for pipe ramming operations; the installation of any required concrete groundwater cutoff walls within the pit and the installation of backstop; temporary plating and fencing; casing insulators; end seals; and any appurtenances. Also included in this item are preparation, submittal, and implementation of noise attenuation methods, plating, and other related Work associated with pipe ramming the 24-inch outside diameter steel casing. For purposes of payment, this item shall be measured by the linear foot of steel cylinder encasement along the longitudinal axis with 10 percent retention (in addition to any other retention) to be retained and paid after successful results.
30. Pipe Ramming 36-inch Outside Diameter Steel Casing. The unit price paid under this item shall be the full payment for providing pipe ramming 36-inch steel cylinder encasement including preparation of the ramming pit for pipe ramming operations including the installation of any required concrete groundwater cutoff walls within the pit and the installation of backstop, temporary plating and fencing, casing insulators, end seals, subsurface settlement indicators and settlement markers, and any appurtenances. Also included in this item are furnishing and implementation of noise attenuation plan, plating, and other related Work associated with pipe ramming the 36-inch outside diameter steel casing. For purposes of payment, this item shall be measured by the linear foot of steel cylinder encasement along the longitudinal axis with 10 percent retention (in addition to any other retention) to be retained and paid after successful results.

31. Guided Bore Method 36-inch Outside Diameter Steel Cylinder Encasement. The unit price paid under this item shall be the full payment for providing guided bore 36-inch steel cylinder encasement including preparation of the bore pit for guided bore operations including the installation of backstop, temporary plating and fencing, operations including the installation of any required concrete groundwater cutoff walls within the pit and the installation of backstop, temporary plating and fencing, casing insulators, end seals, subsurface settlement indicators and settlement markers, grouting of the annular space between casing and carrier pipes, and any appurtenances. Also included in this item are furnishing and implementation of noise attenuation plan, plating, and other related Work associated with guided bore installation of the 36-inch diameter steel casing. For purposes of payment, this item shall be measured by the linear foot of steel cylinder encasement along the longitudinal axis with 10 percent retention (in addition to any other retention) to be retained and paid after successful results.
32. 48-inch Diameter Manhole. The unit price paid under this item shall be full payment for providing a 48-inch diameter precast manhole with precast base including excavation, preparation of subgrade including drain rock, installation of manhole, frame and cover, flexible couplings, seals, manhole connectors, connection of existing side sewer mains as needed, water stops, backfill, compaction, protective coating, concrete collar, surface restoration, and testing. For the purposes of payment, this item will be measured by the unit for each manhole, with 10 percent (in addition to any other retention) to be retained and paid after testing.
33. 60-inch Diameter Manhole. The unit price paid under this item shall be full payment for providing a 60-inch diameter precast manhole including excavation, preparation of subgrade including drain rock, installation of manhole, installation of cast-in-place manhole base or precast manhole base, as needed, frame and cover, flexible couplings, seals, manhole connectors, connection of existing side sewer mains as needed, water stops, backfill, compaction, protective coating, concrete collar, surface restoration, and testing. For the purposes of payment, this item will be measured by the unit for each manhole, with 10 percent (in addition to any other retention) to be retained and paid after testing.
34. 60-inch Diameter Drop Manhole. The unit price paid under this item shall be full payment for providing a 60-inch diameter precast drop manhole with cast-in-place manhole base, including excavation, preparation of subgrade including drain rock, installation of manhole, frame and cover, flexible couplings, seals, manhole connectors, connection of existing side sewer mains as needed, water stops, backfill, compaction, protective coating, concrete collar, surface restoration, and testing. For the purposes of payment, this item will be measured by the unit for each manhole, with 10 percent (in addition to any other retention) to be retained and paid after testing.
35. 72-inch Diameter Drop Manhole. The unit price paid under this item shall be full payment for providing a 72-inch diameter precast drop manhole with precast manhole base or cast-in-place manhole base, as needed, including excavation, preparation of subgrade including drain rock, installation of manhole, frame and cover, flexible couplings, seals, manhole connectors, connection of existing side sewer mains as needed, water stops, backfill, compaction, protective coating, concrete collar, surface restoration, and testing. For the purposes of payment, this item will be measured by the unit for each manhole, with 10 percent (in addition to any other retention) to be retained and paid after testing.

36. 96-inch Diameter Manhole. The unit price paid under this item shall be full payment for providing a 96-inch diameter precast manhole with precast base including excavation, preparation of subgrade including drain rock, installation of manhole, frame and cover, flexible couplings, seals, manhole connectors, water stops, backfill, compaction, protective coating, concrete collar, surface restoration, and testing. For the purposes of payment, this item will be measured by the unit for each manhole, with 10 percent (in addition to any other retention) to be retained and paid after testing.
37. Connect to, and Modify, Existing 60-inch Diameter Manhole. The unit price paid under this item shall be full payment for partially filling existing sanitary sewer manhole with concrete and forming channels in the existing manholes for the connection of new trunk sewer main to existing trunk sewer main, coring of manhole for connection of new trunk sewer main, testing of the coring for the presence of asbestos and providing test results to Owner, abandonment of existing sewer main and trunk sewer main connections as needed, seals, water stops, protective coating, surface restoration, and testing, with 10 percent (in addition to any other retention) to be retained and paid after successful test results. For purposes of payment, this item shall be measured by the unit for connection, to and modification of, existing 60-inch diameter manhole.
38. Abandon Existing 60-inch Diameter Manhole. The unit price paid under this item shall be full payment for abandoning existing manhole including coring and core testing for presence of asbestos in the concrete prior to demolition and providing test results to Owner, excavation, demolition to a minimum 3 feet below ground surface elevation, including removal of frame and cover, backfill, compaction, controlled density fill of the manhole, surface restoration, and disposal of removed materials. For purposes of payment, this item will be measured by the unit for each abandoned 60-inch diameter manhole.
39. Abandon or Remove Existing 21-inch, 8-inch, and 6-inch Diameter Sewer Mains. The lump sum price paid under this item shall be full payment for abandoning sewer mains in place or removing, including excavation, provision of fill and vent pipes, plugging of openings, filling with cellular concrete, and also disposal of any removed pipe, trench backfill, trench compaction, and trench resurfacing.
40. Remove Existing 22-inch Outside Diameter Steel Trunk Sewer Main Spanning Agua Caliente Creek. The lump sum paid under this item shall be full payment for removal and disposal of existing 22-inch outside diameter, 3 gage, cement-lined steel trunk sewer crossing Agua Caliente Creek between the two manholes without entering the creek channel with any equipment. Also included in this item are preparation and submittal of removal plan for 22-inch outside diameter steel trunk sewer main spanning Agua Caliente Creek.
41. Precast Reinforced Siphon Structure "A". The lump sum price paid under this item shall be full payment for providing precast reinforced siphon structure "A" with precast base including excavation, preparation of subgrade, drain rock, installation of structure, double leaf access hatch, flexible couplings, seals, structure connectors, water stops, backfill, compaction, protective coating, surface restoration, and testing. For the purposes of payment, 10 percent (in addition to any other retention) to be retained and paid after backfill and testing.
42. Precast Reinforced Siphon Structure "B". The lump sum price paid under this item shall be full payment for providing precast reinforced siphon structure "B" with precast base including excavation, preparation of subgrade, drain rock, installation of structure, double leaf access hatch , flexible couplings, seals, structure connectors, water stops,

backfill, compaction, protective coating, surface restoration, and testing. For the purposes of payment, 10 percent (in addition to any other retention) to be retained and paid after backfill and testing.

43. Pipe Ramming Pits Excavation and Preparation. The lump sum price paid under this item shall be full payment for providing excavation of the pipe ramming pit and receiving pit; segregation of the top soil from deeper soil spoils; hauling and temporary storage of the excavation top soil and deeper soil spoils; preparation of the pipe ramming pit for pipe ramming procedures including the installation and removal of any required concrete cutoff walls to exclude groundwater, re-hauling, backfilling and compacting the previously removed deeper soil spoils and top soil; placement of the compacted top soil; disposal of any excess spoils; and surface restoration in the pit areas and temporary stockpile areas. For the purposes of payment, 10 percent (in addition to any other retention) to be retained and paid after backfill and surface restoration.
44. Over-Excavation Below Design Trench Subgrade in Vicinity of Siphon Structure "B". The unit price paid under this item shall be full payment for providing excavation, hauling and disposal of over-excavated material under siphon structure "B" and under the double siphon pipes between siphon structure "B" and the double siphon pipes for the purpose of placing the controlled density fill (CDF) buttress fill. For purposes of payment this item shall be measured by Owner's surveying of the excavated pit to calculate the cubic yardage of spoils removed after excavation.
45. CDF Buttress Fill. The unit price paid under this item shall be full payment for providing CDF buttress fill by filling the space to the height, depth, length, and width, under siphon structure "B," and between siphon structure "B" and the south end of the pipe ramming receiving pit, with CDF. For purposes of payment this item shall be measured by the cubic yard of CDF placed as indicated on tags submitted.
46. Guided Bore Method Bore and Jack Pit Excavation. The lump sum price paid under this item shall be full payment for excavating the guided bore pits, segregating top soil from deeper soil spoils, hauling and temporarily storing excavation top soil and deeper soil spoils, preparing the guided bore pit for boring procedures, re-hauling, backfilling and compacting the previously removed deeper spoils and top soil back in the pits, placing compacted top soil up to the surface, disposing of any excess spoils, and providing surface restoration in the pit areas and temporary stockpile areas. For the purposes of payment, 10 percent (in addition to any other retention) to be retained and paid after backfill and surface restoration.
47. Siphon Structures "A" and "B" Pits Excavation. The lump sum price paid under this item shall be full payment for excavating the pits for siphon structures "A" and "B", preparation of the subgrade to receive the structures, backfilling of siphon structures "A" and "B", hauling and dispose of excess spoils, and providing surface restoration around the structures in preparation for surface improvements. For the purposes of payment, 10 percent (in addition to any other retention) to be retained and paid after backfill and surface restoration.
48. Destroy or Remove, and Lower Existing Piezometer Wells. The unit price paid under this item shall be full payment for providing destruction or removal of one existing piezometer, as determined by Owner, and lowering of one existing piezometer, including locking well vault with concrete collar and well destruction fees. For the purposes of payment, this item will be measured by the unit for each piezometer well either destroyed or removed, or lowered, with 10 percent (in addition to any other

retention) to be retained and paid after finalization of well destruction or removal permit and after Owner acceptance of lowering.

49. Destroy Well at 157 Fairview Lane. The lump sum price paid under this item shall be full payment for providing destruction of the domestic water well at 157 Fairview Lane, including removal of the well house structure attached to a storage shed and concrete flooring, above ground piping and tank to 12-inches below ground surface, disconnection of well piping to the house to 12-inches below ground surface, and well destruction permit fees, and doing all work involved in. For the purposes of payment, this item will be measured by the unit for each well destroyed, with 10 percent (in addition to any other retention) to be retained and paid after finalization of well destruction permit.
50. Relocate Wood Frame Structure at 157 Fairview Lane. The lump sum price paid under this item shall be full payment for providing relocation of the existing wood frame structure at 157 Fairview Lane, including temporary internal or exterior bracing, new pier foundation similar to existing pier foundation, removal of existing pier foundation, removal and replacement or re-installation of existing fencing as needed. For the purposes of payment, this item will be measured by the unit for each relocated structure.
51. All-Weather Aggregate Base Access Roadway and Appurtenances. The unit price paid under this item shall be full payment for providing all-weather aggregate base access roadway, including subgrade preparation, pressure treated wood edges, compacted aggregate base roadway surface, and installation of appurtenances including double leaf gate, reinforced concrete pipe (RCP) flared end section, ditch grading, and other miscellaneous grading as needed. For purposes of payment this item shall be measured by the square yard of all-weather aggregate base access roadway placed.
52. Siphon Structure “B” Permeable Paver Access Roadway. The unit price paid under this item shall be full payment for providing permeable paver access roadway, including subgrade preparation, site grading and compaction, aggregate base, geotechnical filter fabric, sand, permeable pavers with edge support, provision of top soil, fertilizer, and grass seed mixture into the concrete grid, maintenance of the grass including watering until after the first mowing, and erosion control blanket on fill slope, and the removal and reuse/repositioning/reinstallation of flagstone walk. For purposes of payment this item shall be measured by the square yard of permeable paver access roadway with 75 percent to be paid upon completion and acceptance by Owner of installation of the permeable paver access roadway, including grass seed mixture, and the remaining 25 percent to be paid following establishment of the grass and the first mowing of the grass.
53. Siphon Structure “A” Access Pad Surface Improvements. The lump sum price paid under this item shall be full payment for providing access pad surface improvements for siphon structure "A," including excavation, fill, miscellaneous site grading, subgrade preparation and compaction, placement of asphalt concrete and aggregate base access pad surfacing, including concrete grade beam, concrete curb and gutter, concrete curb, concrete cutoff wall, aggregate pad, erosion control blanket, removal, grout removal, and relocation of indicated portions of existing grouted rock walls to rock riprap erosion protection on west side of access pad, and to new slope protection on east side of access pad, grading of ditch on east side of access pad and placement of erosion control blanket in new ditch. For purposes of payment, 10 percent (in addition to any other retention) to be retained and paid after all Work is completed.

54. Old Maple Avenue Roadway Resurfacing, and Concrete Curb and Gutter. The lump sum price paid under this item shall be full payment for removal and disposal of existing roadway pavement, subgrade preparation and compaction, placement of new asphalt concrete and aggregate base roadway including grading of new ditch, placement of erosion control blanket in new ditch, raising of utility boxes and frames and covers as needed, and concrete curb and gutter on Old Maple Avenue. For purposes of payment, 10 percent (in addition to any other retention) to be retained and paid after all Work is completed.
55. Type "A" Roadway Asphalt Concrete Resurfacing on Fairview Lane. The unit price paid under this item shall be full payment for providing Type "A" overlay roadway resurfacing on Fairview Lane. For purposes of payment this item shall be measured by the square yard of Type "A" asphalt concrete roadway resurfacing placed.
56. Type "B" Roadway Asphalt Concrete Resurfacing on Fairview Lane. The unit price paid under this item shall be full payment for providing Type "B" grind and replace roadway resurfacing on Fairview Lane. For purposes of payment this item shall be measured by the square yard of Type "B" asphalt concrete roadway resurfacing placed.
57. Transitional Roadway Resurfacing on Fairview Lane between Types "A" and "B". The unit price paid under this item shall be full payment for providing transitional roadway resurfacing on Fairview Lane. For purposes of payment this item shall be measured by the square yard of Type "B" asphalt concrete roadway resurfacing placed.
58. Type "A" Roadway Asphalt Concrete Resurfacing on Old Maple Avenue. The unit price paid under this item shall be full payment for providing Type "A" overlay resurfacing on Old Maple Avenue easterly of curb and gutter Station 1+36.04 as determined by Owner at completion of pipeline Work. For purposes of payment this item shall be measured by the square yard of Type "A" asphalt concrete roadway resurfacing replaced.
59. Revegetation. The lump sum price paid under this item shall be full payment for providing pre-construction mulch spreading, and removal of the mulch at completion of construction Work, revegetation, and hydroseeding, but other than where erosion control blanket is indicated.
60. All Other Work. The lump sum price paid under this item shall be full payment for all Work of Contract Documents other than Work separately provided for under other Bid items. Payment for Work under this item will commence upon 50 percent Project completion, based on Progress Payments as described in Section 01200 (Price and Payment Procedures), and will be paid on a prorated basis thereafter, based on percent Project completion.

E. Contingency Reserve.
   1. Costs authorized to be paid from the Contingency Reserve:
      a. Cost to Contractor or Subcontractor for removal, as directed by Owner, of unforeseen underground manmade structures that interfere with construction and that require special equipment or additional labor, time, or equipment.
      b. Cost to Contractor or Subcontractor for relocation or repair, as directed by Owner, of unforeseen underground utilities.

F. Allowances: (N/A)

G. Alternates: (N/A)

## 1.5 WORK UNDER OTHER CONTRACTS

A. Sonoma County Regional Parks Department will be adjacent to the Site constructing trails parallel to, and on north side of, Verano Avenue including the staging area on Regional Parks' property between Verano Avenue and Old Maple Avenue.

## 1.6 FUTURE WORK

A. None expected.

## 1.7 WORK SEQUENCE

A. Construct Work in stages and at times to accommodate Owner operation requirements during the construction period; coordinate construction schedule and operations with Owner.

B. Special Work sequence requirements include the following:

1. Unless otherwise approved by Owner, Work shall progress in the sewer upstream direction.
2. All roadways, driveways, and sidewalks to be paved shall be completed as soon as possible.
3. Before excavation Work begins and after the ramming, guided boring and receiving pit sites have been laid out, provide arborist services per Section 02315 (Excavation, Bedding, Backfill, and Resurfacing).
4. Prune trees in accordance with Arborist Report as described in Section 02315 (Excavation, Bedding, Backfill, and Resurfacing).
5. Nesting Season: If construction activities must be scheduled to occur during the nesting season from February 1 through August 31, a wildlife biologist provided by Owner will conduct pre-construction surveys for raptors and nesting birds within 300 feet of the Site. If a qualified biologist determines that no active nests will be affected in the work area during surveys, activities may proceed. If active nests are identified within the project site area, non-disturbance buffers of 50 feet. Buffer size shall be determined in cooperation with the California Department of Fish and Wildlife (CDFW). If it is determined that construction activity is resulting in nest disturbance, Work shall cease immediately. Buffers shall remain in place until biologists determine that the young have successfully fledged or nests have been otherwise abandoned.
6. A representative from the Federated Indians of Graton Rancheria (an archaeologist) will be present to monitor the excavation of the new pipe and manhole trench excavation within 25 feet of and under the Old Maple Street, and the replacement and abandonment of the 6-inch diameter PVC pipe under Old Maple Street.
7. Ground-disturbing activities occurring in the channel (i.e., from top-of bank to top-of-bank) shall take place during the low-flow period, between June 15 and October 31. Exceptions may be made for Work occurring outside this time period or emergencies upon prior approval from Owner.
8. Once the first significant rainfall occurs, in-channel equipment and diversion structures shall be removed. Exposed soils in upland areas shall be stabilized via hydroseeding and with erosion control fabric/blankets. Significant rainfall is defined as 0.5 inch of rain in a 24-hour period.
9. Work on the upper banks of stream channels (e.g., vegetation, road, and v-ditch maintenance) may be conducted year round. Ground disturbing activities shall only be conducted during periods of dry weather.

## 1.8 WORK DAYS AND HOURS

A. Work Days and hours: Monday-Friday inclusive, 8:00 a.m.-5:00 p.m. local time.
B. Work at the Site on weekends, holidays, or at night is not permitted, unless Contractor requests otherwise from Owner in writing at least 48 hours in advance and Owner approves in its sole discretion.
C. Contractor will not be permitted to schedule utility shutdowns on Fridays.

## 1.9 SHUTDOWN FOR DISCOVERY OF CULTURAL RESOURCES

A. If discovery is made of items of historical, archaeological, or paleontological interest, immediately cease all Work in the area of discovery. Archaeological indicators may include, but are not limited to, dwelling sites, locally darkened soils, stone implements or other artifacts, fragments of glass or ceramics, animal bones, human bones, and fossils. After cessation of excavation, immediately contact Owner. Do not resume Work until authorization is received from Owner. When resumed, excavation or other activities shall be as directed by Owner.

## 1.10 COOPERATION OF CONTRACTOR AND COORDINATION WITH OTHER WORK

A. Coordinate with Owner and any Owner forces, or other contractors and forces, as required by Document 00700 (General Conditions), Article 6.
B. Employ a full-time coordinator to constantly review Contract Documents, submittals, changes, and prepare overlay drawings as necessary to avoid conflicts, errors, omissions and untimely construction.

## 1.11 PARTIAL OCCUPANCY/UTILIZATION REQUIREMENTS

A. Allow Owner to take possession of and use any completed or partially completed portion of the Work during the progress of the Work as soon as is possible without interference to the Work.
B. Possession, use of Work, and placement and installation of equipment by Owner shall not in any way evidence the completion of the Work or any part of it.
C. Contractor shall not be held responsible for damage to the occupied part of the Work resulting from Owner occupancy.
D. Make available, in areas occupied, on a 24-hour per day and 7-day per week basis if required, any utility services, heating, and cooling in condition to be put in operation at the time of occupancy.
   1. Responsibility for operation and maintenance of said equipment shall remain with Contractor.
   2. Make, and Owner shall certify, an itemized list of each piece of equipment so operated with the date operation commences.
   3. Itemized list noted above shall be basis for commencement of warranty period for equipment.
   4. Owner shall pay for utility cost arising out of occupancy by Owner during construction.
E. Use and occupancy by Owner prior to acceptance of Work does not relieve Contractor of its responsibility to maintain insurance and bonds required under the Contract until entire Work is completed and accepted by Owner.
F. Prior to date of Final Acceptance of the Work by Owner, all necessary repairs or renewals in Work or part thereof so used, not due to ordinary wear and tear, but due to Defective materials or workmanship or to operations of Contractor, shall be made at expense of Contractor, as required in Document 00700 (General Conditions).

G. Use by Owner of Work or part thereof as contemplated by this Section 01100 shall in no case be construed as constituting acceptance of Work or any part thereof. Such use shall neither relieve Contractor of any responsibilities under Contract, nor act as waiver by Owner of any of the conditions thereof.
H. Owner may specify in the Contract Documents that portions of the Work, including electrical and mechanical systems or separate structures, shall be substantially completed on dates described in paragraph 1.7 of this Section 01100, if any, prior to Substantial Completion of all of the Work. Notify Owner in writing when Contractor considers any such part of the Work ready for its intended use and Substantially Complete and request Owner to issue a Certificate of Substantial Completion for that part of the Work.

## 1.12 CONTRACTOR USE OF SITE

A. Confine operations at Site to areas permitted by Contract Documents, permits, ordinances, and laws.
B. Do not unreasonably encumber Site with materials or equipment.
C. Assume full responsibility for protection and safekeeping of products stored on premises.
D. Move any stored products that interfere with operations of Owner or other contractor.
E. Coordinate parking, storage, staging, and Work areas with Owner. Staging shall occur on access roads, surface streets, or other disturbed areas that are already compacted and only support ruderal vegetation to the extent feasible. Similarly, to the extent practical, all maintenance equipment and materials (e.g., road rock and project spoil) shall be contained within the existing service roads, paved roads, or other pre-determined staging areas. Staging areas for equipment, personnel, vehicle parking, and material storage shall be sited as far as possible from major roadways.
F. Owner will not protect the storage area.
G. Do not store construction materials in the Dripline of any tree.
H. Access is available to the Site from road along the route indicated.
I. Contractor shall provide locks in series for the gates at the Walsh and Finnish American Home Association (FAHA) parcels and ensure that the gates are locked at the end of each Work Day and at other times as may be necessary to control unauthorized entry. Owner will provide access to the gate at the Walsh parcel. Contractor shall coordinate access with FAHA directly.

## 1.13 AIR QUALITY STANDARDS

A. Minimize idling times either by shutting equipment off when not in use or reducing the maximum idling time to 5 minutes (as required by the California airborne toxics control measure Title 13, Section 2485 of California Code of Regulations [CCR]).
B. Maintain equipment in good mechanical condition.
C. Cover trucks hauling dirt.
D. Limit dust emissions during periods of high winds (greater than 15 miles per hour).
E. Replace ground cover in disturbed areas as soon as possible.
F. Enclose, cover, water, or apply soil binders to exposed stockpiles.
G. Remove earth tracked onto neighboring paved roads at least once daily.
H. Limit equipment speed to 10 miles per hour in unpaved areas.
I. All haul trucks transporting soil, sand, or other loose material Off Site shall be covered.

## 1.14 CONSTRUCTION STAKING AND MONUMENT PROTECTION

A. Owner will provide construction staking and other surveying, mapping, or computational activities that Owner deems necessary in its sole judgment, including that which may be

used by the Owner to determine pay quantities, or other elements required by or provided for in the Contract Documents.

B. Contractor shall be responsible at its sole expense and direction for construction layout activities (as defined by Owner in its sole and exclusive judgment) and any surveying and/or mapping activities beyond that which will be performed by Owner in accordance with Paragraph A above, including that which may be required to establish and/or document as-built locations, alignments, elevations, grades or quantities required by or provided for in the Contract Documents.

C. Contractor shall be required to prepare and submit to Owner, not less than five Business Days before the Preconstruction Meeting, a Construction Staking Outline consisting of completed draft Construction Survey Request forms detailing the scope, extent, and anticipated schedule of the construction staking proposed by Contractor for each phase of the work and separate Construction Survey Request to be submitted by Contractor during the course of the contract. Owner will review Contractor's Construction Staking Outline and notify Contractor of required changes, modifications, or deletions to the Construction Staking Outline prior to commencement of Work.

D. Construction staking will be provided in accordance with the approved Construction Staking Outline. Modifications and alterations to the Construction Staking Outline must be submitted and approved by Owner not less than five Business Days in advance of the requested date that construction survey activities are to begin (see Construction Survey Request: Requested Start Date). Owner reserves the right to reject, require modification and/or deletions to any such subsequent submittal prior to acceptance.

E. Contractor shall be responsible at its sole expense to ready the area required for construction survey activities prior to the arrival of Owner's survey crews on Site. For the purposes of construction surveying activities, readying includes clearing, grubbing and ensuring that the area required for construction surveys is clear of obstacles, debris, materials, equipment or hazards that would unreasonably interfere with or impede Owner's ability in Owner's reasonable judgment, to productively and effectively provide the construction survey requested, establish reliable, stable, survey points and stakes or markings on the ground. Owner reserves the right to delay, discontinue, or suspend construction surveys in areas and situations that in the sole judgment of Owner, are not sufficiently readied for such surveys. Owner is not responsible for delays resulting from the areas required for construction survey activities not being sufficiently readied prior to survey crew's arrival on Site.

F. Contractor is responsible at its sole expense to provide traffic control for construction surveying activities, and shall coordinate with Owner to ensure sufficient traffic control and or safety measures are in place, prior to the arrival of the survey crew on Site. Owner reserves the right to delay, discontinue or suspend construction surveys in areas and situations that in the sole judgment of Owner lack sufficient traffic control and/or safety measures to safely, productively and efficiently accommodate construction survey activities. Owner is not responsible for delays resulting from the areas required for construction survey activities lacking sufficient traffic control and/or safety measures in place prior to survey crew's arrival on Site.

G. Construction Survey Request(s) shall be submitted by Contractor not less than five Business Days prior to the date that the Site will be readied for construction surveying activities (hereafter referred to as the advanced notice period for Construction Survey Request(s)). Scheduling or time changes for a previously accepted Construction Survey Request shall be submitted to Owner not less than two Business Days in advance of the date that the Site will

be readied. Requests submitted after 12:00 noon will be held over to the next Business Day for the purposes of beginning the advanced notice period for Construction Survey Requests.

H. Contractor is responsible to ensure that sufficient time is allowed to meet the advanced notice period for Construction Survey Request(s) requirements, to perform Site preparation requirements outlined above, to accommodate Owner's scheduling and resource availability, and for the Owner to complete construction survey activities. Contractor shall coordinate with Owner well in advance of the anticipated need, to ensure that sufficient resources are available to complete the construction surveys requested. No extension of time will be granted for delays resulting from construction survey activities.

I. Contractor shall not begin work on any element of construction until construction staking or related survey activity associated with a Construction Survey Request submitted by the Contractor has been completed. For the purposes of this section: Completion of construction staking or related survey activity shall be determined by Owner. Contractor will be notified by Owner.

J. Contractor shall protect and preserve stakes set by Owner in accordance with the above. Contractor shall be responsible at its sole expense for re-staking or verification of survey stakes, cut/fills or markings that are damaged, destroyed or otherwise made un-useful/reliable by activities within its control in the reasonable judgment of Owner. Owner will provide replacement stakes or verification surveys requested by Contractor at Contractor's expense in accordance with normal staff rates and charges associated with personnel, equipment and materials required to perform such activities.

K. Whenever Contractor knows or reasonably should know that any Work or construction-related activity required under this Contract may, or is likely to damage, destroy or cause <u>any</u> property or right of way monument(s), survey control point(s), or Bench Marks to become unusable, Contractor shall notify Owner a minimum of five Business Days in advance of such work or activity. Owner will reference property or right of way monument(s) and survey control point(s) by survey, swing ties, or other appropriate means prior to their disturbance or destruction. Owner will replace or restore as appropriate property or right of way monuments and survey control point(s) disturbed, destroyed or otherwise made un-useful by Contractor's activities upon completion of the construction activities.

L. Contractor shall protect and preserve property or right of way monuments and survey control points, and shall be responsible at its sole expense for the cost replacing or restoring damaged or destroyed property or right of way monuments and survey control points, including the cost of preparing and filing a Corner Record or Record of Survey when required under Sec. 8771(b) of the Business and Professions Code of the State of California where sufficient notification to Owner was not provided in accordance with the above. Owner will perform such Surveying and Mapping activities required in Owner's sole judgment, to restore or replace property or right of way monuments and survey control point(s) disturbed, destroyed or otherwise made un-useful by Contractor's activities and required to comply Sec. 8771(b) of the Business and Professions Code of the State of California, in accordance with staff rates and charges in effect for the associated personnel, equipment and materials required to perform such activities.

## 1.15 PROTECTION OF EXISTING STRUCTURES AND UNDERGROUND FACILITIES

A. The Drawings may indicate existing above- and below-grade structures, drainage lines, storm drains, sewers, water lines, gas lines, electrical lines, and other similar items and Underground Facilities that are known to Owner.

1. At least 2 Business Days, or as otherwise noted, prior to commencement of excavation, notify the owners of the following Underground Facilities:
   a. Sewer lines: Owner, Service Center, Phone: (707) 521-1892
   b. Water lines: Valley of the Moon Water District, Phone: (707) 996-1037
   c. Telephone conduit: AT&T, Phone: Common Ground Alliance, 811
   d. Cable: Comcast, Phone: Common Ground Alliance, 811
   e. Gas lines Common Ground Alliance, 811

B. Where overhead service to a structure, known to receive service, does not exist, then underground service shall be assumed to exist.

C. Attention is also directed to the existence of overhead power and telephone lines.

D. Perform potholing using hand or mechanical vacuum methods within 24 inches (in any direction) of the Underground Facilities. This may be done on an area-by-area basis, but shall be accomplished at least 7 Days in advance of the date of construction within such area.

E. No attempt has been made to locate private utilities on private property such as sprinkler irrigation systems or electrical conduits. Contact the property owners prior to construction.

F. In addition to reporting, if a utility is damaged, Contractor shall take appropriate action as provided in Document 00700 (General Conditions).

G. Additional compensation or extension of time on account of utilities not indicated or otherwise brought to Contractor's attention including reasonable action taken to protect or repair damage shall be determined as provided in Document 00700 (General Conditions).

H. Provide Utility Protection Plan, including:
   1. Indication of all utilities that are expected to conflict with Work, including proposed pothole locations.
   2. Proposed measures to protect active utilities from damage and removal of inactive utilities, as necessary.
   3. Proposed measures to be taken in the event an active utility is damaged or broken due to Contractor's activities.

## 1.16 PERMITS

A. Permits, agreements, or written authorizations that are known by Owner to apply to this Project are listed below:
   1. *California Department of Fish and Wildlife 1601, Lake or Streambed Alteration Agreement* (Notification #1600-2014-0059-R3). Owner is in the process of obtaining this agreement. A copy of Owner's final draft agreement is included at the end of this Section 01100.
   2. *State Water Resources Control Board (SWRCB ), Order No. 2009-0009 – DWQ, National Pollutant Discharge Elimination System (NPDES), General Permit for Storm Water Discharges Associated with Construction and Land Disturbance Activities (Construction General Permit).* The permit is available at Owner's office or is available online at http://www.swrcb.ca.gov/water_issues/programs/stormwater/constpermits.shtml. Owner will file a Notice of Intent with SWRCB to obtain coverage under the General Permit. Contractor shall provide the Storm Water Pollution Prevention Plan, as described in Section 01500 (Temporary Facilities and Controls), in support of the Notice of Intent. Owner has determined that this Project has a combined risk level 2 as defined by SWRCB.
   3. *Cal/OSHA Permit.* Obtain, as applicable, permit(s) as required by Cal/OSHA for the following:

a. Construction of trenches or excavations that are five feet or more in depth and into which a person is required to descend.

The local Cal/OSHA district office is located at:

1221 Farmers Lane, Suite 300
Santa Rosa, CA 95405
Phone: (707) 576-2388

4. *Cal/OSHA, Mining and Tunneling Unit Underground Classification*. A copy of Owner's underground classification is included at the end of this Section 01100. Contractor shall post a copy of the underground classification at the Site.
5. *County of Sonoma Encroachment Permit*. A copy of Owner's encroachment permit is included at the end of this Section 01100. Contractor will be required to obtain a separate no-cost permit from PRMD.
6. *County of Sonoma Grading Permit.* Obtain the necessary permit from PRMD for the Work under this Contract requiring a permit.
7. *County of Sonoma Permit to Destroy Existing Well*. Obtain the necessary permit from PRMD for the Work under this Contract requiring a permit.
8. *Bay Area Air Quality Management District [Notice of Intent]*. Contractor may be required to obtain a separate permit from the Bay Area Air Quality Management District if required for the approval of the Asbestos Cement Pipe (ACP) Plan and Manhole Abandonment Plan.
9. *One Time Groundwater Discharge Permit.* If disposing of groundwater to sewer, obtain the necessary no-cost permit from Owner.
10. *San Francisco Bay Regional Water Quality Control Board (SFBRWQCB), Conditional Certification for the* Sonoma Valley County Sanitation District, Sewer Trunk Replacement (Agua Caliente Creek Crossing) *Project.* If disposing of groundwater to surface, obtain the necessary permit from SFBRWQCB.

B. All other permits that may be required, including, but not limited to, electrical, mechanical, fire prevention, irrigation, grading, slope protection, tree cutting, dechlorinated water discharge, and flushing water discharge have not been applied for and shall be obtained by Contractor.

C. Applicable permit fees, if specifically listed in Document 00700 (General Conditions), will be reimbursed by Owner to the extent specified therein. All other permit fees shall be paid by Contractor.

D. Furnish copies of Contractor-obtained permits to Owner.

## 1.17 ACTUAL DAMAGES

A. Owner may incur actual damages, including fines imposed by any regulatory agency, resulting from discharge or threatened discharge of trench dewatering water directly to storm drain, and/or sewage spills or threatened spills to storm drain, up to $25,000 plus $25 per gallon over 1,000 gallons that was not cleaned up per Day or occurrence in accordance with Section 13385 of the California Water Code and other costs or civil liabilities, or from violation of the SWRCB Order No. 2009-0009 – DWQ, NPDES General Permit, or from violation of legal or regulatory requirements resulting from Contractor's acts or omissions. Contractor shall be liable for and shall pay Owner the amount of any such actual losses in addition to liquidated damages and any other remedies provided by the Contract Documents for actual damages including fines imposed by any regulatory agency or court order resulting from Contractor's acts or omissions. This paragraph shall not limit any other remedies Owner may have in law or equity.

## 1.18 RIGHTS-OF-WAY

A. Owner has secured perpetual easements and license agreements (for temporary use during construction) for the Project, as indicated on the Drawings and Agreements for Possession and Use of perpetual easement areas, and license areas (for temporary use during construction) for the Project including draft perpetual easements and license agreements.
B. The perpetual easements, license agreements (hereafter referred to as temporary construction easements), and Agreements for Possession and Use referred to herein, are hereafter collectively referred to as the Owner's right-of-way.
C. Contractor's entry into and use of the Owner's right-of-way for the Project shall be coordinated with and approved by Owner in advance of Contractor's entry into or use of Owner's right of way. Contractor shall provide not less than two Business Days advanced notice of Contractor's temporary entry or continued use of Owner's right-of-way.
D. Contractor shall contain their activities within the boundaries of the Owner's right of way. If necessary, Contractor shall request Owner to delineate the boundaries of the Owner's right-of-way on the ground, and such request shall be considered by the Owner as Construction Staking for the purposes of this requirement (see applicable requirements under Paragraph 1.14).
E. Owner shall be the primary point of contact for any necessary interactions required between Contractor and property owners affected by the Work unless specifically agreed to in advance by Owner.
F. Contractor shall immediately notify Owner of any dispute with or issue raised by affected property owners or others, in regard to Contractor's use of or activities within Owners' right of way. Should any issue arise regarding Contractor's activities within or use of Owner's right of way for the Project, Owner reserves the exclusive authority to determine or agree to any resolution of such matters.

## 1.19 DOCUMENT TRACKING

A. Owner will maintain a computerized document control system to monitor the generation, status, and filing of documents. Documents such as, but not limited to, Contracts, Cost Proposals, Change Orders (proposed and approved), Meeting Minutes, Schedules and Reports, Payment Applications, certificates of insurance, Safety Reports, Requests for Information, Requests for Substitutions, correspondence, communications, notices, Submittals, transmittals, and logs shall be submitted electronically for Owner to control the documents using the computerized system. Owner will use the computerized system to track and manage all documents on the Project, after Notice to Proceed, to the greatest extent possible.
B. Provide all Project documents to Owner in electronic format, unless otherwise required by the Contract Documents. If file size prohibits electronic transmittal, submit to Owner on compact disk (CD).
C. Provide electronic format documents in searchable portable document format (PDF), unless otherwise required by the Contract Documents or directed in writing by Owner.

# PART 2 PRODUCTS

## 2.1 PRODUCTS ORDERED IN ADVANCE

A. As provided in Section 01200 (Price and Payment Procedures), paragraph 1.5E, and subject to all other provisions of the Contract Documents, Owner will pay for the following materials and equipment prior to incorporation into the Work:

1. Materials:
   a. None.
2. Equipment:
   a. None.

## 2.2 OWNER-FURNISHED PRODUCTS

A. Owner-Furnished Products:
   1. None
B. Owner's Responsibilities:
   1. Arrange for and deliver Owner-reviewed Shop Drawings, Product Data, and Samples, to Contractor.
   2. Arrange and pay for delivery to Site.
   3. On delivery, inspect products jointly with Contractor.
   4. Submit claims for transportation damage and replace damaged, Defective, or deficient items.
   5. Arrange for manufacturers' warranties, inspections, and service.
C. Contractor's Responsibilities:
   1. Review Owner-reviewed Shop Drawings, Product Data, and Samples.
   2. Receive and unload products at Site; inspect for completeness or damage jointly with Owner.
   3. Handle, store, install, and finish products.
   4. Repair or replace items damaged after receipt.
   5. Install into Project per Contract Documents.

# PART 3 EXECUTION – NOT USED

END OF SECTION

OWNER PERMITS FOLLOW THIS SECTION

State of California – The Natural Resources Agency
DEPARTMENT OF FISH AND WILDLIFE
Bay Delta Region
7329 Silverado Trail
Napa, CA 94558
(707) 944-5520
www.wildlife.ca.gov

***EDMUND G. BROWN JR.**, Governor*
***CHARLTON H. BONHAM, Director***

February 27, 2015

Subject: Draft Lake or Streambed Alteration Agreement
Notification No. 1600-2014-0059-R3
Agua Caliente Creek, Sonoma County
SVCSD Sewer Trunk Main Replacement

The Department of Fish and Wildlife (Department) has determined that your project requires a Lake or Streambed Alteration Agreement (Agreement) because it could substantially adversely affect an existing fish or wildlife resource. Enclosed is a draft Agreement that includes measures the Department has determined are necessary to protect existing fish and wildlife resources.

Within 30 days of receipt of this draft Agreement, you must notify the Department in writing whether the measures to protect fish and wildlife resources are acceptable (Fish and Game Code section 1603). **If you agree with the measures set forth in the draft Agreement, you or your authorized representative must return two copies of the draft Agreement with original signatures to the above address.**

If you disagree with any measures in the draft Agreement, please contact the Department staff identified below. In the event that mutual agreement is not reached, you may follow the dispute resolution process described in Fish and Game Code section 1603(a), Part III of the "Notification Instructions and Process." If you fail to respond in writing within 90 days of receiving the draft Agreement, the Department may withdraw the draft Agreement.

Please be advised the Department may not execute the Agreement until it has complied with the California Environmental Quality Act (CEQA) (Public Resources Code section 21000 *et seq.*) as the lead or a responsible agency. Please note that the draft Agreement may be subject to change upon receipt and review of the environmental document for the project.

When acting as a CEQA responsible agency, the Department must first receive the following: 1) a certified or approved environmental document prepared in accordance with CEQA; 2) Notice of Determination, if one is filed; 3) CEQA Findings; and 4) proof that the environmental filing fee required under Fish and Game Code section 711.4 has been paid. If the lead agency determined that the project is exempt under CEQA, please provide a copy of the Notice of Exemption or other information that indicates the basis for the exemption.

*Conserving California's Wildlife Since 1870*

After you receive a final Agreement executed by the Department, you may begin the project the Agreement authorizes provided you have obtained all other necessary local, state, and federal permits or other authorizations.

For more information on the process described above, please refer to Part IV in the "Notification Instructions and Process" included with your notification materials, which is also available at www.dfg.ca.gov/habcon/1600/notificationpackage.pdf.

If you have any questions regarding this matter, please contact Adam McKannay, Environmental Scientist, at (707) 944-5534 or adam.mckannay@wildlife.ca.gov.

**CALIFORNIA DEPARTMENT OF FISH AND WILDLIFE**
BAY DELTA REGION
7329 SILVERADO TRAIL
NAPA, CALIFORNIA 94558
(707) 944-5500
WWW.WILDLIFE.CA.GOV

**STREAMBED ALTERATION AGREEMENT**
NOTIFICATION NO. 1600-2014-0058-R3
Agua Caliente Creek, Sonoma County

SONOMA VALLEY COUNTY SANITATION DISTRICT
SVCSD SEWER TRUNK MAIN REPLACEMENT – AGUA CALIENTE CREEK CROSSING PROJECT

This Streambed Alteration Agreement (Agreement) is entered into between the California Department of Fish and Wildlife (CDFW) and Sonoma Valley County Sanitation District (Permittee) as represented as Grant Davis.

## RECITALS

WHEREAS, pursuant to Fish and Game Code (FGC) section 1602, Permittee notified CDFW on February 20, 2014, that Permittee intends to complete the project described herein. New information was provided January 20, 2015.

WHEREAS, pursuant to FGC section 1603, CDFW has determined that the project could substantially adversely affect existing fish or wildlife resources and has included measures in the Agreement necessary to protect those resources.

WHEREAS, Permittee has reviewed the Agreement and accepts its terms and conditions, including the measures to protect fish and wildlife resources.

NOW THEREFORE, Permittee agrees to complete the project in accordance with the Agreement

## PROJECT LOCATION

The project is located at Agua Caliente Creek, in the County of Sonoma, State of California; the project is located immediately behind the FAHA Heritage Center at 197 West Verano Avenue, Sonoma. See Exhibit A. *Figure 2 – Project Staging Areas*.

## PROJECT DESCRIPTION

The project is limited to the relocation of a section of the sewer trunk main pipeline to below Agua Caliente Creek. The pipe will be installed using a pipe ramming technique due to the presence of cobblestones within the streambed. Two pipe ramming pits will

Ver. 02/16/2010

be constructed, a 36-foot long by 20-foot wide by 30-foot deep ramming pit and a 13-foot wide by 10-foot long by 28-foot deep receiving pit. Both pits are set back from the top of bank by at least 10 feet. Excavated materials will be stored for site restoration. Two steel casings, 24-inch- and 36-inch in diameter, will then be rammed between the ram pit and the receiving pit, a distance of approximately 133 feet. The casings will be a minimum of 7 feet below the bed of the channel. Two siphon pipelines, 12-inch and 24-inch diameter, will then be installed within the steel casings and connected to precast reinforced concrete siphon junction structures located at least 33 feet from the top of each bank. If groundwater is encountered in the construction pits it will be pumped into Baker tanks and removed from the site for proper disposal. The existing section of suspended sewer trunk main will be cut off and removed and remaining infrastructure will be capped.

Upon completion of pipeline installation, materials excavated from the site will be used to fill each pits to its natural contour. Excess fill materials will be removed from the site and properly disposed of.

Detailed project plans are available in Exhibit B. *Plan and Profile STA 0+00 to 5+00*, Sonoma Valley County Sanitation District, dated February 3, 2015, sheet C-1.

**PROJECT IMPACTS**

Existing fish or wildlife resources the project could substantially adversely affect include:

- Steelhead trout
- Nesting birds
- Riparian habitat

The adverse effects the project could have on the fish or wildlife resources identified above include:

- change in shading or insolation leading to vegetative change
- loss or decline of riparian habitat
- loss or impediment of terrestrial animal species travel routes due to temporary structures (e.g., survey tape, sandbags, erosion protection materials etc.)
- short-term release of contaminants (e.g., incidental from construction)
- disruption to nesting birds and other wildlife
- direct take of terrestrial species
- disturbance from project activity

**MEASURES TO PROTECT FISH AND WILDLIFE RESOURCES**

**1. Administrative Measures**

Permittee shall meet each administrative requirement described below.

1.1 Documentation at Project Site. Permittee shall make the Agreement, any extensions and amendments to the Agreement, and all related notification materials and California Environmental Quality Act (CEQA) documents, readily available at the project site at all times and shall be presented to CDFW personnel, or personnel from another state, federal, or local agency upon request.

1.2 Providing Agreement to Persons at Project Site. Permittee shall provide copies of the Agreement and any extensions and amendments to the Agreement to all persons who will be working on the project at the project site on behalf of Permittee, including but not limited to contractors, subcontractors, inspectors, and monitors.

1.3 Notification of Conflicting Provisions. Permittee shall notify CDFW if Permittee determines or learns that a provision in the Agreement might conflict with a provision imposed on the project by another local, state, or federal agency. In that event, CDFW shall contact Permittee to resolve any conflict.

1.4 Project Site Entry. Permittee agrees that CDFW personnel may enter the project site at any time to verify compliance with the Agreement.

1.5 No Trespass. To the extent that any provisions of this Agreement provide for activities that require the Permittee to traverse another owner's property, such provisions are agreed to with the understanding that the Permittee possesses the legal right to so traverse. In the absence of such right, any such provision is void.

1.6 Notify DFG Staff Before Beginning Work. Permittee shall notify the CDFW, in writing, at least five (5) calendar days prior to initiation of construction (project) activities within CDFW jurisdiction and at least five (5) calendar days prior to completion of construction (project) activities within CDFW jurisdiction. Initial notification shall include the name(s) and contact information of the person(s) overseeing the project site as well as a project schedule that includes the start date and estimated end date, weekly work days and hours of operation. Notification shall be sent via e-mail to adam.mckannay@wildlife.ca.gov.

**2. Avoidance and Minimization Measures**

To avoid or minimize adverse impacts to fish and wildlife resources identified above, Permittee shall implement each measure listed below.

**Work Periods and Planning**

2.1 Work according to plans. All work shall be completed according to the plans submitted to CDFW entitled, *Plan and Profile STA 0+00 to 5+00,* Sonoma Valley County Sanitation District, dated February 3, 2015, sheet C-1 (Exhibit B). If the Permittee finds it necessary to update project plans prior to construction, the updated plans will be submitted to CDFW at least 30 days prior to beginning project activities to determine if an Amendment to this Agreement is required. Project activities shall not proceed until CDFW has approved the updated plans in writing. At the discretion of CDFW, minor plan modifications may require an amendment to this Agreement. At the discretion of the CDFW, if substantial changes are made to the original plans this Agreement becomes void and the Permittee shall submit a new notification.

2.2 Instream Work Period. Work in the stream channel shall be confined to the period **June 1 through October 31**.

2.3 Work only during dry weather. The work period for completing the work within the stream zone, shall be restricted to periods of low or no stream flow and dry weather. Drilling shall not begin unless a no precipitation forecast is obtained covering the entire construction phase (within the area covered in this agreement) and the time necessary to implement erosion control measures. Seventy-two-hour weather forecasts from the National Weather Service shall be consulted prior to startup of any phase of the project that may result in sediment runoff to the stream. This forecast shall be documented upon request by the CDFW.

2.4 Work Period Modification. If Permittee needs more time to complete the project activity, the work may be permitted outside of the work period and extended on a day-to-day basis by the CDFW representative who reviewed the project. Permittee shall submit a written request for a work period variance to CDFW. The work period variance request shall: 1) describe the extent of work already completed; 2) detail the activities that remain to be completed; 3) detail the time required to complete each of the remaining activities; and 4) provide photographs of both the current work completed and the proposed site for continued work. The work period variance request should consider the effects of increased stream flows, rain delays, increased erosion control measures, limited access due to saturated soil conditions, and limited growth of erosion control grasses due to cool weather. Work period variances are issued at the discretion of CDFW. CDFW will review the written request to

work outside of the established work period. CDFW reserves the right to require additional measures to protect fish and wildlife resources as a condition for granting the variance. CDFW will have seven (7) calendar days to review the proposed work period variance.

**Ramming/Drilling**

2.5 Ramming/Drilling - Weather Conditions. Boring/drilling shall occur only when conditions are dry, and no water is flowing in the channel.

2.6 Drilling – Materials. No drilling spoils shall be allowed to enter the stream channel. Any contaminated water/materials from the drilling and/or project activities shall be pumped or placed into a holding facility and removed for proper disposal.

2.7 Trenching / Excavation Spoils. No castings or spoil from the excavation operations shall be placed on the stream side of the excavation site.

2.8 Stockpile and Return Topsoil. Topsoil shall be stockpiled and redistributed as close to its original location as possible over the construction area before revegetation procedures are undertaken.

2.9 Spill Cleanup. Permittee shall begin the cleanup of all spills immediately. CDFW shall be notified immediately by the Permittee of any spills and shall be consulted regarding cleanup procedures. The Permittee shall have all spill clean-up equipment on site during construction.

2.10 Spill Containment. All activities performed in or near a stream shall have absorbent materials designated for spill containment and clean up activities on-site for use in an accidental spill. The Permittee shall immediately notify the California Emergency Management Agency at 1-800-852-7550 and immediately initiate the clean up activities. CDFW shall be notified by the Permittee and consulted regarding clean-up procedures.

**Wildlife Protection and Prevention - Special Status Species**

2.11 Listed species. This agreement does not authorize for the take, or incidental take of any State or Federal listed threatened or endangered listed species. The Permittee is required, as prescribed in these laws, to consult with the appropriate agency prior to commencement of the project. Any unauthorized take of such listed species may result in prosecution.

2.12 Designated Biologist. At least thirty (30) days before initiating ground- or vegetation-disturbing activities, the Permittee shall submit to the CDFW in writing the name, qualifications, business address, and contact information for a biological monitor (Designated Biologist). Permittee shall obtain CDFW's written approval of the Designated Biologist prior to the commencement of project activities in the stream. The Designated Biologist shall be knowledgeable and experienced in the biology and natural history of local fish and wildlife resources present at the project site. The Designated Biologist shall be responsible for monitoring all project activities, including construction and any ground- or vegetation-disturbing activities in areas subject to this agreement.

2.13 Breeding Bird Survey Before Commencement. If vegetation removal or other project-related improvements are scheduled during the nesting season of protected raptors and migratory birds (typically February 15 to August 15), a focused survey for active bird nests shall be conducted by a Designated Biologist (as determined by a combination of academic training and professional experience in biological sciences and related resource management activities) within 10 days prior to the beginning to project-related activities. The results of the survey shall be submitted to CDFW. If active nest are found, the Permittee shall consult with CDFW and the United States Fish & Wildlife Service (FWS) regarding appropriate action to comply with the Migratory Bird Treaty Act of 1918 and the Fish & Game Code of California, section 3503. If a lapse in project-related work of 10 days or longer occurs, another focused survey and if required, consultation with CDFW and FWS, will be required before project work can be reinitiated.

**Wildlife Protection and Prevention - General**

2.14 No equipment in stream. No equipment shall be operated below the level of top of bank.

2.15 No Excavation in Stream. No excavation in the portion of the stream bed where flowing water is present or anticipated during the term of this agreement.

2.16 Stranded Wildlife in Trench. At the beginning of each workday the Designated Biologist shall check daily for stranded wildlife in the trench. All reasonable efforts shall be made to capture and move all stranded wildlife observed in the trench. This condition does not allow for the take or disturbance of any State or federally listed

species, or State listed species of special concern. If special status species are found in the trench the Permittee shall coordinate with CDFW and/or USFWS on their capture and relocation.

2.17 Allow Wildlife To Leave Unharmed. Permittee shall allow any wildlife encountered during the course of construction to leave the construction area unharmed. This authorization does not allow for the trapping, capture, or relocation of any state or federally listed species.

2.18 Prohibition Against Use of Plastic Netting in Erosion Control Measures. Permittee shall not use temporary or permanent erosions control devices containing plastic netting, including photo- or bio-degradable plastic netting. Erosion control and landscaping specifications shall only allow only natural fiber for use in erosion control mats, blankets, and straw or fiber wattles.

**Vegetation Protection and Prevention**

2.19 Vegetation Removal. Disturbance or removal of vegetation is prohibited. No vegetation is identified for removal within the project area.

2.20 Treat exposed areas. All exposed/disturbed areas and access points within the stream zone left barren of vegetation as a result of the construction activities shall be restored by seeding with a blend of native erosion control grass seeds. Seeded areas shall be mulched. All other areas of disturbed soil which drain toward the stream channel shall be seeded with erosion control grass seeds. Revegetation shall be completed as soon as possible after construction activities in those areas cease. Seeding placed after October 15 must be covered with broadcast straw, jute netting, coconut fiber blanket or similar erosion control blanket.

**Erosion and Sediment Control**

2.21 Erosion control. Erosion control measures shall be utilized throughout all phases of operation where sediment runoff from exposed slopes threatens to enter waters of the State. At no time shall silt laden runoff be allowed to enter the stream or directed to where it may enter the stream. Silt control structures shall be monitored for effectiveness and shall be repaired or replaced as needed

2.22 Silt Laden Runoff. At no time shall silt laden runoff be allowed to enter the stream or directed to where it may enter the stream.

Erosion control measures, such as, silt fences, straw hay bales, gravel or rock lined ditches, water check bars, and broadcasted straw shall be used where ever silt laden water has the potential to leave the work site and enter the stream.

2.23 Disposal and Removal of Materials. All removed vegetation and debris shall be moved outside the normal high-water mark prior to inundation by water. All removed vegetation and debris shall be disposed of according to State and local laws and ordinances.

2.24 Clean-up. All construction debris and associated materials shall be removed from the work site upon completion of this project.

2.25 Treat exposed areas. All exposed/disturbed areas and access points within the stream zone left barren of vegetation as a result of the construction activities shall be restored by seeding with a blend of native erosion control grass seeds. Seeded areas shall be mulched. All other areas of disturbed soil which drain toward the stream channel shall be seeded with erosion control grass seeds. Revegetation shall be completed as soon as possible after construction activities in those areas cease. Seeding placed after October 15 must be covered with broadcast straw, jute netting, coconut fiber blanket or similar erosion control blanket.

**Equipment and Vehicles**

2.26 Operating Equipment and Vehicle Leaks. Any equipment or vehicles driven and/or operated within or adjacent to the stream shall be checked and maintained daily to prevent leaks of materials that could be deleterious to aquatic and terrestrial life or riparian habitat.

2.27 Stationary Equipment Leaks. Stationary equipment such as motors, pumps, generators, and welders, located within or adjacent to the stream shall be positioned over drip pans. Stationary heavy equipment shall have suitable containment to handle a catastrophic spill/leak.

2.28 Clean Up Equipment. Clean up equipment such as extra boom, absorbent pads, skimmers, shall be on site prior to the start of work within the stream zone.

2.29 Equipment Storage. Staging and storage areas for equipment, materials, fuels, lubricants and solvents, shall be located outside of the stream channel and banks.

2.30 Stockpiled Materials. Building materials and/or construction equipment shall not be stockpiled or stored where they may be washed into the water or cover aquatic or riparian vegetation. Stockpiles shall be covered when measurable rain is forecasted.

**Debris Materials and Waste**

2.31 Location of Spoil Sites. Spoil sites shall not be located within a stream or locations that may be subjected to high storm flows, where spoil may be washed back into a stream, or where it may impact streambed habitat, aquatic or riparian vegetation.

2.32 No Dumping. Permittee and all contractors, subcontractors, and employees shall not dump any litter or construction debris within the stream, or where it may pass into the stream.

2.33 Pick Up Debris. Permittee shall pick up all debris and waste daily.

2.34 Wash water. Water containing mud, silt, or other pollutants from equipment washing or other activities, shall not be allowed to enter a lake or flowing stream or placed in locations that may be subjected to high storm flows.

2.35 Clean-up. All construction debris and associated materials shall be removed from the work site upon completion of this project.

**Toxic and Hazardous Materials**

2.36 Toxic Materials. Any hazardous or toxic materials that could be deleterious to aquatic life that could be washed into the stream or its tributaries shall be contained in water tight containers or removed from the project site.

2.37 Hazardous Substances. Raw cement/concrete or washings thereof, asphalt, paint or other coating material, oil or other petroleum products, or any other substances which could be hazardous to aquatic life, resulting from project related activities, shall be prevented from contaminating the soil and/or entering the waters of the state. Any of these materials, placed within or where they may enter the stream by Permittee or any party working under contract, or with the permission of Permittee, shall be removed immediately.

2.38 Hazardous Materials. Debris, soil, silt, bark, slash, sawdust, rubbish, creosote-treated wood, raw cement/concrete or washings thereof, asphalt, paint or other coating material, oil or other petroleum

products, or any other substances which could be hazardous to aquatic life, wildlife, or riparian habitat resulting from the project related activities shall be prevented from contaminating the soil and/or entering the waters of the State.

**3. Reporting Measures**

Permittee shall meet each reporting requirement described below.

3.1 Notification to the California Natural Diversity Database. If any special status species are observed in project surveys, Permittee or designated representative shall submit Natural Diversity Data Base (NDDB) forms to the NDDB for all preconstruction survey data within five (5) working days of the sightings, and provide to the CDFW's Regional office three (3) copies of the NDDB forms and survey maps.

**CONTACT INFORMATION**

Any communication that Permittee or CDFW submits to the other shall be in writing and any communication or documentation shall be delivered to the address below by U.S. mail, fax, or email, or to such other address as Permittee or CDFW specifies by written notice to the other.

To Permittee:
Sonoma Valley County Sanitation District
Contact: Yvette O'Keefe
404 Aviation Blvd.
Santa Rosa, CA 95403
Phone (707) 547-1943
yokeefe@scwa.ca.gov

To CDFW:

California Department of Fish and Wildlife
Bay Delta Region
7329 Silverado Trail
Napa, California 94558
Attn: Lake and Streambed Alteration Program – Adam McKannay
Notification #1600-2014-0059-R3
Fax (707) 944-5534
adam.mckannay@wildlife.ca.gov

**LIABILITY**

Permittee shall be solely liable for any violations of the Agreement, whether committed by Permittee or any person acting on behalf of Permittee, including its officers, employees, representatives, agents or contractors and subcontractors, to complete the project or any activity related to it that the Agreement authorizes.

This Agreement does not constitute CDFW's endorsement of, or require Permittee to proceed with the project. The decision to proceed with the project is Permittee's alone.

**SUSPENSION AND REVOCATION**

CDFW may suspend or revoke in its entirety the Agreement if it determines that Permittee or any person acting on behalf of Permittee, including its officers, employees, representatives, agents, or contractors and subcontractors, is not in compliance with the Agreement.

Before CDFW suspends or revokes the Agreement, it shall provide Permittee written notice by certified or registered mail that it intends to suspend or revoke. The notice shall state the reason(s) for the proposed suspension or revocation, provide Permittee an opportunity to correct any deficiency before CDFW suspends or revokes the Agreement, and include instructions to Permittee, if necessary, including but not limited to a directive to immediately cease the specific activity or activities that caused CDFW to issue the notice.

**ENFORCEMENT**

Nothing in the Agreement precludes CDFW from pursuing an enforcement action against Permittee instead of, or in addition to, suspending or revoking the Agreement.

Nothing in the Agreement limits or otherwise affects CDFW's enforcement authority or that of its enforcement personnel.

**OTHER LEGAL OBLIGATIONS**

This Agreement does not relieve Permittee or any person acting on behalf of Permittee, including its officers, employees, representatives, agents, or contractors and subcontractors, from obtaining any other permits or authorizations that might be required under other federal, state, or local laws or regulations before beginning the project or an activity related to it.

This Agreement does not relieve Permittee or any person acting on behalf of Permittee, including its officers, employees, representatives, agents, or contractors and subcontractors, from complying with other applicable statutes in the FGC including, but not limited to, FGC sections 2050 et seq. (threatened and endangered species), 3503

(bird nests and eggs), 3503.5 (birds of prey), 5650 (water pollution), 5652 (refuse disposal into water), 5901 (fish passage), 5937 (sufficient water for fish), and 5948 (obstruction of stream).

Nothing in the Agreement authorizes Permittee or any person acting on behalf of Permittee, including its officers, employees, representatives, agents, or contractors and subcontractors, to trespass.

**AMENDMENT**

CDFW may amend the Agreement at any time during its term if CDFW determines the amendment is necessary to protect an existing fish or wildlife resource.

Permittee may amend the Agreement at any time during its term, provided the amendment is mutually agreed to in writing by CDFW and Permittee. To request an amendment, Permittee shall submit to CDFW a completed CDFW "Request to Amend Lake or Streambed Alteration" form and include with the completed form payment of the corresponding amendment fee identified in CDFW's current fee schedule (see Cal. Code Regs., tit. 14, § 699.5).

**TRANSFER AND ASSIGNMENT**

This Agreement may not be transferred or assigned to another entity, and any purported transfer or assignment of the Agreement to another entity shall not be valid or effective, unless the transfer or assignment is requested by Permittee in writing, as specified below, and thereafter CDFW approves the transfer or assignment in writing.

The transfer or assignment of the Agreement to another entity shall constitute a minor amendment, and therefore to request a transfer or assignment, Permittee shall submit to CDFW a completed CDFW "Request to Amend Lake or Streambed Alteration" form and include with the completed form payment of the minor amendment fee identified in CDFW's current fee schedule (see Cal. Code Regs., tit. 14, § 699.5).

**EXTENSIONS**

In accordance with FGC section 1605(b), Permittee may request one extension of the Agreement, provided the request is made prior to the expiration of the Agreement's term. To request an extension, Permittee shall submit to CDFW a completed CDFW "Request to Extend Lake or Streambed Alteration" form and include with the completed form payment of the extension fee identified in CDFW's current fee schedule (see Cal. Code Regs., tit. 14, § 699.5). CDFW shall process the extension request in accordance with FGC 1605(b) through (e).

If Permittee fails to submit a request to extend the Agreement prior to its expiration, Permittee must submit a new notification and notification fee before beginning or continuing the project the Agreement covers (Fish & G. Code, § 1605, subd. (f)). .

**EFFECTIVE DATE**

The Agreement becomes effective on the date of CDFW's signature, which shall be: 1) after Permittee's signature; 2) after CDFW complies with all applicable requirements under the California Environmental Quality Act (CEQA); and 3) after payment of the applicable FGC section 711.4 filing fee listed at http://www.wildlife.ca.gov/habcon/ceqa/ceqa_changes.html.

**TERM**

This Agreement shall expire on December 31, 2019, unless it is terminated or extended before then. All provisions in the Agreement shall remain in force throughout its term. Permittee shall remain responsible for implementing any provisions specified herein to protect fish and wildlife resources after the Agreement expires or is terminated, as FGC section 1605(a)(2) requires.

**EXHIBITS**

The documents listed below are included as exhibits to the Agreement and incorporated herein by reference.

A. *Figure 2 – Project Staging Areas*

B. *Plan and Profile STA 0+00 to 5+00,* Sonoma Valley County Sanitation District, February 3, 2015, sheet C-1

**AUTHORITY**

If the person signing the Agreement (signatory) is doing so as a representative of Permittee, the signatory hereby acknowledges that he or she is doing so on Permittee's behalf and represents and warrants that he or she has the authority to legally bind Permittee to the provisions herein.

**AUTHORIZATION**

This Agreement authorizes only the project described herein. If Permittee begins or completes a project different from the project the Agreement authorizes, Permittee may be subject to civil or criminal prosecution for failing to notify CDFW in accordance with FGC section 1602.

**CONCURRENCE**

The undersigned accepts and agrees to comply with all provisions contained herein.

**FOR SONOMA VALLEY COUNTY SANITATION DISTRICT**

Grant Davis
General Manager

3.2.15
Date

**FOR DEPARTMENT OF FISH AND WILDLIFE**

Craig J. Weightman
Environmental Program Manager

Date

Prepared by: Adam McKannay
Environmental Scientist

Date Sent: February 13, 2015
Date Revised: February 27, 2015

STATE OF CALIFORNIA EDMUND G. BROWN, JR., Governor

DEPARTMENT OF INDUSTRIAL RELATIONS
DIVISION OF OCCUPATIONAL SAFETY AND HEALTH
MINING AND TUNNELING UNIT
2424 Arden Way, Suite 125
Sacramento, California 95825
doshM&Tsac@dir.ca.gov

Telephone (916) 574-2540
FAX (916) 574-2542

February 3, 2015

Sonoma County Water Agency
404 Aviation Blvd
Santa Rosa, CA 95403

Attention: Victor H. Swift, Water Agency Engineer III

Subject: Project: 15059 – Agua Caliente Creek Siphon Crossing & Trunk Replacement
Classification: Potentially Gassy With Special Conditions
Number Attached: 3 (A-C)

The information provided to this office relative to the above project has been reviewed. On the basis of this analysis, Underground Classifications of "Potentially Gassy With Special Conditions" have been assigned to the tunnels identified on your submittal. Please retain the original Classifications for your records and deliver a true and correct copy of each Classification to the tunnel contractor for posting at the job site.

When the contractor who will be performing the work is selected, please advise them to notify this office to schedule the mandated Pre-Job Conference with the Division prior to commencing any activity associated with boring of the tunnels. A Pre-Job Request Form is enclosed.

Should you have another bore under construction that is not required to have an Underground Classification (i.e.: less than 30 inches in diameter), please contact the Mining and Tunneling Unit prior to any employee entry of such a space.

If you have any questions on this subject, please contact this office at your earliest convenience.

Sincerely,

Douglas Patterson
Senior Engineer

enc: Classifications
Pre-Job Request Form

cc: Vic.Swift@scwa.ca.gov
jsnapp@dir.ca.gov

**State of California**

**Department of Industrial Relations**

DIVISION OF OCCUPATIONAL SAFETY AND HEALTH
MINING AND TUNNELING UNIT

# Underground Classification

**15059A097CT** **SONOMA COUNTY WATER AGENCY**

of **404 AVIATION BLVD; SANTA ROSA, CA 95403**

at **AGUA CALIENTE CREEK SIPHON CROSSING & TRUNK REPLACEMENT**

has been classified as ***** POTENTIALLY GASSY WITH SPECIAL CONDITIONS *****

as required by the California Labor Code § 7955.

The Division shall be notified if sufficient quantities of flammable gas or vapors have been encountered underground. Classifications are based on the California Labor Code Part 9, Tunnel Safety Orders and Mine Safety Orders.

*****SPECIAL CONDITIONS*****

1. **A Certified Gas Tester shall perform pre-entry and continuous monitoring of the underground environment to measure Oxygen and detect explosive, flammable, and toxic gasses whenever an employee is working in the underground environment.**
2. **Mechanical ventilation shall provide for continuous exhaust of fumes and air at any time an employee is working in the underground environment. The primary ventilation fans must be located outside of the underground environment and shall be reversible by a single switch near the fan location.**
3. **The Division shall be notified immediately if any Flammable Gas or Petroleum Vapor exceeds 5% of the Lower Explosive Limit.**
4. **All utilities that may be in conflict with the project shall be identified and physically located (potholed) prior to the start of project operations.**

**SEWER LINE**

**The 36-inch-diameter 130-foot-long tunnel bore beneath Agua Caliente Creek located approximately 1,000 feet west of the Highway 12 & Verano Avenue intersection in Sonoma, Sonoma County**

This classification shall be conspicuously posted at the place of employment.

Douglas Patterson, Senior Engineer

February 3, 2015

**State of California**

**Department of Industrial Relations**

DIVISION OF OCCUPATIONAL SAFETY AND HEALTH
MINING AND TUNNELING UNIT

# Underground Classification

**15059A097CT**
**CORRECTION 1**

**SONOMA COUNTY WATER AGENCY**

of **404 AVIATION BLVD; SANTA ROSA, CA 95403**

at **AGUA CALIENTE CREEK SIPHON CROSSING & TRUNK REPLACEMENT**

has been classified as ***** POTENTIALLY GASSY WITH SPECIAL CONDITIONS *****

as required by the California Labor Code § 7955.

The Division shall be notified if sufficient quantities of flammable gas or vapors have been encountered underground. Classifications are based on the California Labor Code Part 9, Tunnel Safety Orders and Mine Safety Orders.

*****SPECIAL CONDITIONS*****

1. **A Certified Gas Tester shall perform pre-entry and continuous monitoring of the underground environment to measure Oxygen and detect explosive, flammable, and toxic gasses whenever an employee is working in the underground environment.**
2. **Mechanical ventilation shall provide for continuous exhaust of fumes and air at any time an employee is working in the underground environment. The primary ventilation fans must be located outside of the underground environment and shall be reversible by a single switch near the fan location.**
3. **The Division shall be notified immediately if any Flammable Gas or Petroleum Vapor exceeds 5% of the Lower Explosive Limit.**
4. **All utilities that may be in conflict with the project shall be identified and physically located (potholed) prior to the start of project operations.**

**SEWER LINE**

**The 36-inch-diameter 130-foot-long tunnel bore beneath Agua Caliente Creek located approximately 1,800 feet west of the Highway 12 & Verano Avenue intersection in Sonoma, Sonoma County**

This classification shall be conspicuously posted at the place of employment.

Douglas Ratterson, Senior Engineer

February 18, 2015

**State of California**

**Department of Industrial Relations**

DIVISION OF OCCUPATIONAL SAFETY AND HEALTH
MINING AND TUNNELING UNIT

# Underground Classification

**15059B097CT** **SONOMA COUNTY WATER AGENCY**

of **404 AVIATION BLVD; SANTA ROSA, CA 95403**

at **AGUA CALIENTE CREEK SIPHON CROSSING & TRUNK REPLACEMENT**

has been classified as ***** POTENTIALLY GASSY WITH SPECIAL CONDITIONS *****

as required by the California Labor Code § 7955.

The Division shall be notified if sufficient quantities of flammable gas or vapors have been encountered underground. Classifications are based on the California Labor Code Part 9, Tunnel Safety Orders and Mine Safety Orders.

*****SPECIAL CONDITIONS*****

1. **A Certified Gas Tester shall perform pre-entry and continuous monitoring of the underground environment to measure Oxygen and detect explosive, flammable, and toxic gasses whenever an employee is working in the underground environment.**
2. **Mechanical ventilation shall provide for continuous exhaust of fumes and air at any time an employee is working in the underground environment. The primary ventilation fans must be located outside of the underground environment and shall be reversible by a single switch near the fan location.**
3. **The Division shall be notified immediately if any Flammable Gas or Petroleum Vapor exceeds 5% of the Lower Explosive Limit.**
4. **All utilities that may be in conflict with the project shall be identified and physically located (potholed) prior to the start of project operations.**

**STORM DRAIN**

**The 36-inch-diameter 72-foot-long tunnel bore beneath residential property located approximately 250 feet southwest of the Buena Vida Drive & Buena Vida Court intersection in Sonoma, Sonoma County**

This classification shall be conspicuously posted at the place of employment.

Douglas Patterson, Senior Engineer

February 3, 2015

**State of California**

**Department of Industrial Relations**

DIVISION OF OCCUPATIONAL SAFETY AND HEALTH
MINING AND TUNNELING UNIT

# Underground Classification

**15059C097CT** **SONOMA COUNTY WATER AGENCY**

of **404 AVIATION BLVD; SANTA ROSA, CA 95403**

at **AGUA CALIENTE CREEK SIPHON CROSSING & TRUNK REPLACEMENT**

has been classified as ***** POTENTIALLY GASSY WITH SPECIAL CONDITIONS *****

as required by the California Labor Code § 7955.

The Division shall be notified if sufficient quantities of flammable gas or vapors have been encountered underground. Classifications are based on the California Labor Code Part 9, Tunnel Safety Orders and Mine Safety Orders.

*****SPECIAL CONDITIONS*****

1. **A Certified Gas Tester shall perform pre-entry and continuous monitoring of the underground environment to measure Oxygen and detect explosive, flammable, and toxic gasses whenever an employee is working in the underground environment.**
2. **Mechanical ventilation shall provide for continuous exhaust of fumes and air at any time an employee is working in the underground environment. The primary ventilation fans must be located outside of the underground environment and shall be reversible by a single switch near the fan location.**
3. **The Division shall be notified immediately if any Flammable Gas or Petroleum Vapor exceeds 5% of the Lower Explosive Limit.**
4. **All utilities that may be in conflict with the project shall be identified and physically located (potholed) prior to the start of project operations.**

**The 36-inch-diameter 255-foot-long tunnel bore beneath residential property located approximately 400 feet west of the Buena Vida Drive & Buena Vida Court intersection in Sonoma, Sonoma County**

This classification shall be conspicuously posted at the place of employment.

Douglas Patterson, Senior Engineer

February 3, 2015

State of California
Department of Industrial Relations
Division of Occupational Safety & Health

# REQUEST FOR PRE-JOB (TUNNEL)

**ATTACH COPY OF CLASSIFICATION AND DIESEL PERMIT**

Company Name:_____

Phone_____FAX:_____

**DATE FAXED:** _____

*PLEASE NOTE: THE BORING CONTRACTOR SHOULD SCHEDULE THE PREJOB AS FAR IN ADVANCE AS POSSIBLE – AT LEAST 3-4 DAYS IN ADVANCE. THE DIVISION REQUIRES THE JOB TO BE SET UP WHEN THE FIELD ENGINEER ARRIVES FOR THE PREJOB. THIS MEANS THAT THE BORE PIT HAS BEEN DUG AND PROPERLY GUARDED, THE CRANE IS IN PLACE AND READY TO LIFT, THE BORING MACHINE IS IN THE PIT AND READY TO GO, AND THE CREW IS READY TO BEGIN BORING THE TUNNEL. IF THERE IS A DELAY IN SETTING UP THE JOB, THE BORING CONTRACTOR SHOULD CONTACT THE DIVISION IMMEDIATELY.*

**PRE-JOB REQUEST DATE & TIME:** _____

**ON-SITE SUPERVISOR & CELL NO.:** _____

**CLASSIFICATION #:** _____ **DIESEL PERMIT #:** _____

**BORE DIAMETER AND LENGTH:** _____ (Diameter) _____ (Length)

**IS BORE ENTRY ANTICIPATED? YES NO**
(Circle One)

***You MUST contact the Division if entry is planned, REGARDLESS of the bore diameter.***

**MANNER OF EXCAVATION:** _____

**JOB-SITE LOCATION AND DIRECTIONS:** _____

**GENERAL CONTRACTOR:** _____

**SUBMITTED BY:** _____

**REVIEWED BY:** _____ **DATE:** _____

☐ *Mining & Tunneling Unit, District 1*
*2424 Arden Way, Suite 125*
*Sacramento, California 95825-2400*
*(916) 574-2540; **FAX: (916) 574-2542***

☐ *Mining & Tunneling Unit, District 2*
*6150 Van Nuys Blvd., Suite 310*
*Van Nuys, California 91401-3333*
*(818) 901-5420; **FAX: (818) 901-5579***

☐ *Mining & Tunneling Unit, District 3*
*464 West Fourth Street, Suite 354*
*San Bernardino, California 92401-1442*
*(909) 383-6782; **FAX: (909) 388-7132***

# COUNTY OF SONOMA

## PERMIT AND RESOURCE MANAGEMENT DEPARTMENT

2550 VENTURA AVENUE, SANTA ROSA, CA 95403-2829
(707) 565-1900 FAX (707) 565-1103

## Encroachment Permit # ENC15-0035

**To request an inspection, call (707) 565-3551 (5 days advance notice required)**

| County Road Name | Road Number | Postmile |
|---|---|---|
| ACADEMY LN | 56060A | 10.11 |
| BUENA VIDA DR | 56149 | 10.05 |
| OLD MAPLE AVE | 56053 | 10.00-10.05 |

| | |
|---|---|
| Plancheck Fee: | $0.00 |
| Permit Fee: | $371.00 |
| Inspection Fee: | $941.00 |
| SUSMP Fee: | $0.00 |
| NPDES Fee: | $40.00 |
| Penalty Fee: | $0.00 |
| Previously Paid: | .00 |
| Additional Fee(s): | $0.00 |
| Balance Due: | $1,370.00 |

Work Site Address: 1 COUNTYWIDE COU
Type of Activity: Created for Bid Purposes
Parcel Number: 000-000-001
Project: SEWER TRUNK REPLACEMENT

Issue Date:
To Expire:

**APPLICANT:**
SONOMA COUNTY WATER AGENCY
404 AVIATION BLVD
SANTA ROSA CA 95403

707 526 5370

**Contact:**

**CONTRACTOR:**

License #

| | | |
|---|---|---|
| Bonding Co: | Bond #: | Exp. Date: |
| 2nd Bond Co: | Bond #: | Exp. Date: |
| Insurance Co: | Policy #: | Exp. Date: |

Permittee agrees to accept all responsibility for loss or damage to any person or entity and to indemnify, hold harmless, and defend and release County of Sonoma, its agents, and employees from and against any and all liability actions, claims, damages, costs, or expenses which may be asserted by any person or entity, including Permittee, arising out of or in connection with the willful act or negligence of Permittee performing the work associated with this Encroachment Permit, whether or not there is concurrent negligence on the part of the County, but excluding liability due to the sole active negligence or sole willful misconduct of County.

THE PERMITTEE AGREES THAT THE EVENT ACTIVITY WILL BE CONDUCTED IN ACCORDANCE WITH AND SUBJECT TO THIS PERMIT'S TERMS AND CONDITIONS, THE STATE VEHICLE CODE, THE STATE STREETS AND HIGHWAYS CODE AND IS SUBJECT TO INSPECTION AND APPROVAL.

This permit is to be strictly construed and no work other than that specifically mentioned below is authorized hereby. Whenever Engineer concludes persons performing encroachment work are not complying with the provisions of this permit, Engineer may revoke permit. Subject to all the terms, conditions and restrictions written hereon or attached hereto, permission is hereby granted Permittee to:

THIS PERMIT IS FOR BID PURPOSES ONLY. EXCAVATE IN THE PAVEMENT ALONG OLD MAPLE AVE,BUENA VIDA DR AND ACADEMY LN TO INSTALL A 6" TRUNK MAIN AS PER ATTACHED PLANS TITLED
"AGUA CALIENTE CREEK SIPHON CROSSING AND TRUNK REPLACMENT". PREPARED BY SONOMA COUNTY WATER AGENCY. SEE ATTACHED PLANS FOR LOCATION OF WORK. LOCATED IN SONOMA.

ATTACHMENTS:
(Y ) Special Provisions
(Y ) Signing
( ) Standard Drawings
(Y ) Permit Plans
(Y ) Standard Conditions
(Y ) Backfill from Approved Source

COMPLETION CERTIFICATION

Permit Inspected By:_____ Date

APPROVED: 3/16/15
DeWayne Starnes
Deputy County Engineer
Date

Road Yard: SONOMA Area No. 22

**Refunds** will not be authorized unless circumstances comply with established PRMD refund policy provisions.

permitenc7 AB-ENC 1401 Rev. 05/15/07

# Special Provisions
# Encroachment Permit # ENC15-0035

March 16, 2015

Permit # ENC15-0035 is issued subject to the following conditions:

1: CONTRACTOR TO SUBMIT 4 SETS OF APPROVED PLANS.

2: CONTRACTOR SHALL PROVIDE PROOF IN WRITING OF NOTIFICATION OF LANE CLOSURES TO EMERGENCY SERVICES, PROPERTY OWNERS, MAIL DELIVERY, SCHOOLS, PUBLIC TRANSIT AND TRASH HAULERS WITHIN THE LIMITS OF THE WORK.

3: CONTRACTOR TO SEND OUT THE WRITTEN NOTIFICATION AND INSTALL INFORMATIONAL SIGNS TWO WEEKS PRIOR TO CONSTRUCTION, STATING LIMITS OF WORK, START OF WORK, WORKING HOURS, AND PHONE NUMBER TO CALL.

4: CLOSURE OF PUBLIC ROADS IS NOT PERMITTED. LANE CLOSURES ARE PERMITTED. HOWEVER,THE CONTRACTOR SHALL SUPPLY THE COUNTY OF SONOMA WITH THE ONE LANE TRAFFIC CONTROL PLAN, FROM THE CALIFORNIA MAUNAL ON UNIFORM TRAFFIC CONTROL DEVICES DATED 2003 FOR REVIEW AND APPROVAL PRIOR TO ISSUANCE OF ENCROACHMENT PERMIT. THE PLAN MUST INCLUDE PROVISIONS FOR SAFE PASSAGE OF PEDESTRIANS.

5: CONTRACTOR SHALL SUPPLY THE COUNTY WITH A LETTER STATING WHO WILL INSPECT THE SEWER MAIN INSTALLATION, ALONG WITH CONTACT INFORMATION,

6: ALL MATERIALS EXCAVATED THAT ARE NOT REQUIRED FOR BACKFILLING SHALL BE PROMPTLY REMOVED AND DISPOSED OF BY THE CONTRACTOR. THE DISPOSAL SITE SHALL HAVE A VALID GRADING PERMIT. NO MATERIALS SHALL BE TEMPORALLY STOCKPILED AT A LOCATION THAT DOES NOT HAVE A VALID GRADING PERMIT.

7: TRENCH PLATES: TRENCH PLATES PLACED IN AREAS WHEREUPON VEHICLES WILL TRAVEL SHALL BE NON SKID STEEL PLATES AND SHALL BE SECURED WITH TEMPORARY ASPHALTIC CONCRETE AND/OR PINS IF NECESSARY TO SATISFY THE INSPECTOR.

8: FOR TRENCH BACKFILL SEE NOTES ON 219 A

9: PRIOR TO STARTING WORK, A 5 DAY NOTICE IS REQUIRED FOR A PRECONSTRUCTION MEETING WITH THE PERMITS AND RESOURCE MANAGEMENT DEPARTMENT INSPECTOR.

CONDENC 10/22/04

ENC15-0035

# Standards for Construction Activity Within the County Road Right-of-Way

**Note: Approval from PRMD Engineering Construction Inspection Staff must be granted prior to commencing any work in the County Right-of-Way. Approval shall be requested by scheduling a "Start Work Notice (Item 240)" using the automated inspection system at (707) 565-3551. Failure to obtain approval to start work will result in penalty fees and/or permit revocation.**

I. General

a. *Acceptance of the terms of the encroachment permit*: It is understood and agreed by the Permittee that performance of any work authorized by the encroachment permit shall constitute acceptance of all of the terms, provisions, and conditions of the permit and its attachments. Failure to comply with any of terms, provisions, or conditions of the permit and its attachments may result in penalty fees, permit revocation, and/or direction to immediately cease work and vacate the County Road Right-of-Way.

b. *Standards*: Work shall comply with the latest edition of the State Specifications of the State of California Department of Transportation, County of Sonoma Transportation and Public Works Standards, or other standards and specifications as approved by the permit or its attachments.

c. *Control of Work*: All work and all materials used to complete the work authorized by the encroachment permit shall be subject to the inspection and approval of the Inspector. Such inspection and approval of the work and materials shall not relieve the Permittee of any of their obligations to complete the work in conformance with all applicable specifications. Work and materials not meeting these requirements shall be rejected. If determined to be unsuitable, work and materials may be rejected even if previously inspected and approved by the Inspector.

d. *Access to Work*: The Inspector shall have access to the work at all times to determine that the methods, materials and workmanship are in accordance with the terms of the encroachment permits and all applicable specifications. The Inspector may reject defective work and shall require its repair, replacement, or removal by the Permittee.

e. *Permit On-Site*: The encroachment permit and all of its attachments shall be kept at the job site and must be made immediately available to the Inspector or any law enforcement officer upon demand.

f. *Trench Permit*: The Permittee shall obtain a trench permit from the California Division of Industrial Safety prior to the excavation of any trench over five feet in depth.

g. *Other Authorization*: When required, it is the Permittee's responsibility to ensure that all approval(s) have been obtained by other required jurisdictions.

h. *Restoration of Right-of-Way*: Upon completion of the construction activity, the right-of-way shall be restored to as good as or better than its pre-construction condition. The permit shall not be finaled until the Inspector is satisfied that the right-of-way has been adequately restored It is the responsibility of the Permittee to photograph and/or video the right-of-way affected by the work prior to beginning construction, and to make available said photograph(s) and/or video(s) to the Inspector before commencing work. If no such photograph(s) and/or videos are available, the right-of-way shall be assumed to have been in good condition and shall be restored as directed by the Inspector.

i. *Storage of Material and Equipment*: Unless allowed by the Inspector, no material or equipment shall be

stored within ten (10) feet from the edge of the traveled way.

j. *Approval of Work*: The inspector shall approve all work at the completion of each of the following stages of work and such approval must be obtained before subsequent stages of work may be commenced. The Permittee shall call the automated inspection system at (707) 565-3551 and use the codes provided on the green Engineering Division Permit Inspection Record (job card) to request inspection and/or approval to proceed.

1. Earthwork:
   Construction of embankments, excavations.
   Excavation for storm drains and culverts.
   Preparation of subgrade
   Back-filling of structures and pipes and public utilities.
2. Concrete work:
   Construction of forms, for all concrete structures, including curbs, gutters, and sidewalks.
   Placing of concrete in structures, including curbs, gutters, and sidewalks.
3. Drainage facilities:
   Placing of storm drains and culvert pipes.
   Construction of roadside ditches and other drainage ways
4. Roadway construction:
   Placing and compacting of base material. If more than one course or type of base or sub-base is to be used, approval shall be necessary for each course and/or type.
   Placing of pavement or surfacing.
5. Final clean-up.

k. *Additional Work or Facilities*: The Inspector may require additional work or facilities in the course of the construction of the project in order for the improvements to reasonably provide for the intended function or for public safety.

l. *Maintenance and Repair*: The Permittee agrees by the acceptance of the encroachment permit to exercise reasonable care in properly maintaining any encroachment placed by the Permittee. The Permittee shall exercise reasonable care in inspecting and immediately repairing any damage to any portion of the road right-of-way which occurs as a result of the work done under the encroachment permit. If the Permittee does not repair existing road facilities, County crews may perform the repair work at their cost plus 100% for administration and overhead. The Permittee is responsible for paying the County for these costs within 30 days of receipt of invoice from the County.

m. *Permit Revocation*: All encroachment permits are subject to revocation for failure to comply with the any of the conditions contained herein, or as deemed necessary by the Inspector for the protection of public safety or the protection of the County road right-of-way.

n. *Future Removal or Relocation*: In the event of the future improvement of the County road right-of-way necessitating the relocation or removal of the encroachment(s) permitted herein, the permittee shall relocate or remove the same at their sole expense. In such event, written notice shall be served on the permittee specifying the work required and specifying a time within which the work of relocation or removal shall be commenced and completed.

o. *Conflicting Construction*: When this permit authorizes work that occurs in the vicinity of a County project, the work conducted under this permit shall be coordinated with the Sonoma County Department of Transportation and Public Works so as not to cause any conflict with said County project, or the encroachment permit shall be revoked.

p. *Ownership of Land in County Road Right-of-Way*: In many instances, the County does not own the

underlying fee of the land in the County road right-of-way; its interest is limited to an easement only. In all such cases, it is the responsibility of the Permittee to obtain the consent of the owner or owners of the underlying fee before undertaking any below surface operations. (Note: Public Utility companies are afforded certain underground rights in the public road right-of-way by State law.)

q. *Underground Service Alert (U.S.A.) Notification*: The Permittee shall be responsible for notifying U.S.A. Call toll-free (800) 642-2444 at least two working days prior to excavation. The Permittee shall uncover existing buried utilities with utility owner to verify locations and elevations of utilities. Buried utilities include but are not limited to: water, sewer, electrical, gas, cable, and telephone.

r. *Cultural Resources*: In the event cultural resources (i.e., historical, archaeological, and paleontological resources and human remains) are discovered during grading or other construction activities, work shall be halted within a 100 foot radius of the find. The Northwest Information Center shall be notified at (707) 664-0880. A qualified archeologist shall be consulted for an on-site evaluation. Additional mitigation may be required by the County per the archeologist's recommendations. If human burials or human remains are encountered, the contractor shall also notify the County Coroner at (707) 565-5070.

s. *Hazardous Materials*: Should hazardous materials, or apparent hazardous materials, be discovered during the course of work, work in the affected area shall be stopped immediately. Emergency Services, or the appropriate agency, and the Inspector shall be immediately notified.

t. *Existing Striping and Pavement Markings*: All existing striping and pavement markings disturbed by construction activity shall be replaced with thermoplastic and shall be approved by the Encroachment Inspector or by the Sonoma County Traffic Engineering Department Inspector.

u. *Existing Public Signs*: Relocation or removal of existing public signs shall not occur until approval has been obtained by the Inspector.

v. *Precedent*: This permit is granted with the understanding that this action is not to be considered as establishing any precedent on the expediency of permitting or establishing any precedence on the permitting of a certain kind of encroachment within the County road right-of-way.

w. *Conflict with Approved Plans*: If this permit contains a set of approved Encroachment plans and a conflict exists between the approved plans and these notes, the more restrictive shall prevail, or the Inspector may determine which is appropriate.

II. Liability

a. *Liability for Damages*: Permittee agrees to accept all responsibility for loss or damage to any person or entity and to indemnify, hold harmless, and defend and release the County of Sonoma, its agents and employees of and against any and all liability, actions, claims, damages, costs or expenses which may be asserted by any person or entity, including Permittee, arising out of or in connection with the willful act or negligence of Permittee performing the work associated with this Encroachment Permit, whether or not there is concurrent negligence on the part of the County.

III. Traffic Control

a. *Traffic Control Plan*: Permittee shall provide and install all traffic control devices per the CA Supplement to the Manual of Uniform Traffic Control Devices (CA MUTCD) Typical Applications, or as otherwise required on the approved traffic control plan issued as an attachment to the encroachment permit.

b. *Traffic Control Approval*: No construction activity shall commence until traffic control at the job site

has been approved by the Inspector.

c. *Other Authorization*: Where applicable, the Permittee shall obtain approval from any other jurisdictions necessary to place traffic control devices in their rights-of-way, or shall obtain permission from any applicable entity for the placement of traffic control devices outside of the County of Sonoma's right-of-way.

d. *Lane of Travel*: One ten foot (10') wide lane shall be kept open at all times, unless otherwise approved by the Inspector or permitted by the approved traffic control plan.

e. *Flaggers*: Flaggers shall be required per the CA MUTCD, the approved traffic control plan, or at the Inspector's discretion as necessary to protect public safety.

f. *Pedestrians and Cyclists*: Permittee shall provide for and protect pedestrian and cyclist traffic per the CA MUTCD Typical Applications, the approved traffic control plan, or per the Inspector's direction. Where pedestrian or cyclist traffic is permitted to pass through the work zone, the Permittee shall provide them an appropriate escort.

IV. Backfill and Paving

a. *Trench Backfill and Paving*: All trenching in the right-of-way shall conform to Sonoma County Transportation and Public Works Standard Drawing 219, unless otherwise specified on the encroachment permit, the attached approved plans, or as otherwise approved by the Inspector.

b. *Trench Stability*: If the trench is not stable, remedial work may be required and the Permittee shall be responsible for submitting a proposal to address any unstable trench conditions.

c. *Compaction Testing*: The Permittee shall hire individuals certified to perform testing in accordance with Caltrans' test method No. 216 Part II or ASTM 1557, and shall provide those test results to the Inspector. As an alternative to testing, the use of the County approved cement backfill (also known as CDF or CLSM) shall be used.

d. *Compaction Requirements*: The subgrade, Class II Aggregate Base, and AC shall be compacted to 95% relative compaction.

e. *Minimum Depths*: Underground utilities shall be located per the utility company or agency's standards, but in no case shall they be located any shallower than is allowed by Sonoma County Transportation and Public Works Standard Drawing 219.

f. *Driveway Trench Crossings*: Trench backfill within driveway crossings shall conform to Sonoma County Transportation and Public Works Standard Drawing 804.

g. *Temporary Patching*: Any trench within the paved roadway left without final paving shall have cold patch material added at the end of each day. The Permittee, at their expense, shall continually maintain the cold patch, as directed by the Inspector, until the final pavement is placed. Temporary paving shall be completely removed prior to the final paving.

h. *Paving Provisions*: Permittee shall restore the roadway to as good as or better than its pre-construction condition, as noted in the following:

1. The Permittee shall restore the roadway to its pre-construction condition. Any pavement cracked, broken or damaged by the Permittee during construction shall be replaced or repaired to the satisfaction of the Inspector. This requirement does not preclude the overlaying (in kind) of the entire roadway if deemed necessary by the Inspector.

2. The Permittee shall remove a minimum of 18 inches of existing asphalt between the edge of the trench and the existing edge of pavement or between the edge of the trench and existing lip of the gutter before placing the new asphalt.

i. *Liquid Anti-Stripping Agent (LAS)*: LAS shall be added to the asphalt binder at a rate of 0.5% by weight of asphalt binder. The LAS shall be AD-here LOF 65-00 or equivalent, and shall be stored, measured, and blended with the asphalt binder in accordance with the anti-stripping agent manufacturer's recommended practice. The LAS can be added at the asphalt plant or at the refinery. When added at the asphalt plant, the equipment shall indicate and record the amount of LAS added. If added at the refinery, the shipping ticket from the refinery shall certify the type and amount of LAS added.

j. *Final Paving*: Unless otherwise approved by the Inspector, final paving shall be applied no later than ten (10) working days after traffic is allowed to pass over the work area.

V. Work Hours

a. *Work Hours*: Work shall generally be permitted from 7:00AM - 7:00PM, but shall not begin earlier than one half hour after sunrise or end later than one half hour before sunset, unless otherwise noted in the special conditions of the encroachment permit or as approved by the Inspector.

b. *Weekends, Nights, and Holidays*: No work shall be performed during weekends, nights, or holidays unless authorized by the Inspector or the special conditions of the encroachment permit.

VI. Public Safety

a. *Excavations*: In addition to any other measures taken by the Permittee pursuant to the provisions of the Standard Specifications, Section 7-1.09, "Public Safety", the Contractor shall install temporary K-railing between any lane carrying public traffic and any excavation when the near edge of the excavation is 12 feet (12') or less from the edge of the lane, except for:

1. Excavations covered with non-skid steel plates of adequate thickness to prevent accidental entry by traffic or the public.
2. Excavations less than one foot (1') deep.
3. Trenches less than one foot (1') wide for irrigation pipe or electrical conduit or excavations less than one foot (1') in diameter.
4. Excavations in side slopes where the slope is less than 4:1.
5. Excavations protected by an existing barrier or K-railing.

b. *Elevation of Pavement*: At the end of each working day if a difference in excess of 0.15 feet exists between the elevation of the existing pavement and the elevation of any excavation within 8 feet of the traveled way, material shall be placed and compacted against the vertical cuts adjacent to the existing pavement at a maximum 4:1 slope.

c. *Trench Plates*: Trench plates placed in areas whereupon vehicles will travel shall be non-skid steel plates and shall be secured with temporary asphaltic concrete and/or pins as necessary to the Inspector's satisfaction.

VIII. Drainage

a. *Care of Drainage*: Drainage shall not be impaired. If the work permitted herein interferes with drainage, the Permittee shall make ample accommodations as necessary to satisfy the Inspector.

b. *Maintenance of Drainage*: The Permittee shall maintain drainage throughout the work area. Such

maintenance shall include, but is not limited to, keeping all culverts and inlets clean and open.

IX. Removal or Trimming of Roadside Trees

a. *Removal of Trees*: When a permit is issued for removal of a tree, as part of the project, the entire stump shall be taken out to a depth of at least two feet (2') below the ground surface, unless otherwise specified in the permit. The hole left by the stump shall be backfilled, and compacted. The site shall be approved by the Inspector.

b. *Trimming of Trees*: Tree trimming shall be limited to branches up to two inches (2") in diameter unless other specified by the permit. Scars resulting from trimming shall be appropriately treated.

X. Erosion Prevention and Sediment Control

a. Perform erosion prevention and sediment control in accordance with Chapter 11 Grading, Drainage, and Vineyard and Orchard Site Development.

b. Work shall conform to the erosion prevention and sediment control best management practices contained in the latest editions of the following publications or an equivalent best management practice:

*Erosion and Sediment Control Field Manual,* San Francisco Bay Regional Water Quality Control Board
*Manual of Standards for Erosion & Sediment Control Measures*, Association of Bay Area Governments
*Construction Site Best Management Practices Manual,* Caltrans
*Stormwater Best Management Practice Handbook,* CA Stormwater Quality Association.

c. If discrepancies occur between these notes, material referenced herein or manufacturer's recommendations, then the most protective shall apply.

d. The Permittee is responsible for obtaining and complying with the National Pollutant Discharge Elimination System (NPDES) General Permit No. Cas000002 Waste Discharge Requirements for discharges of storm water runoff associated with construction activity disturbing land equal to or greater than one acre. Construction activities include but are not limited to clearing, grading, excavation, stockpiling, and reconstruction of existing facilities involving removal and replacement.

e. Preservation of existing vegetation shall occur to the maximum extent practicable.

f. The Permittee is responsible for preventing storm water pollution generated from the construction site year round. The owner must implement an effective combination of erosion prevention and sediment control on all disturbed areas during the rainy season (October 15 - April 15).

g. Erosion prevention and sediment control measures shall be inspected by the Permittee before forecasted storm events and after actual storm events to ensure measures are functioning properly. Storm events produce at least 1 inch of precipitation in a 24 hour period. Erosion prevention and sediment control measures that have failed or are no longer effective shall be promptly replaced. Erosion prevention and sediment control measures shall be maintained until disturbed areas are stabilized.

h. Changes to the erosion prevention and sediment control plan may be made to respond to field conditions. Changes shall be noted on the plan when made.

i. Discharges of potential pollutants from construction sites shall be prevented using source controls to the maximum extent practicable. Potential pollutants include but are not limited to: sediment, trash, nutrients, pathogens, petroleum hydrocarbons, metals, concrete, cement, asphalt, lime, paint, stains, glues, wood products, pesticides, herbicides, chemicals, hazardous waste, sanitary waste, vehicle or

equipment wash water and chlorinated water.

j. Entrance(s) to the construction site shall be maintained in a condition that will prevent tracking or flowing of potential pollutants offsite. Potential pollutants deposited on paved areas within the County road right-of-way, such as roadways and sidewalks, shall be properly disposed of at the end of each working day or more frequently as necessary.

k. Exposed slopes shall be protected by using erosion prevention measures to the maximum extent practicable, such as establishing 70% vegetation coverage, hydroseeding, straw mulch, geotextiles, plastic covers, blankets or mats.

l. Hydroseeding shall be conducted in a three step process. First, evenly apply seed mix and fertilizer to the exposed slope. Second, evenly apply mulch over the seed and fertilizer. Third, stabilize the mulch in place.

Applications shall be broadcasted mechanically or manually at the rates specified below. Seed mix and fertilizer shall be worked into the soil by rolling or tamping. If straw is used as mulch, straw shall be derived from wheat, rice or barley and be approximately 6 to 8 inches in length. Stabilization of mulch shall be done hydraulically by applying an emulsion or mechanically by crimping or punching the mulch into the soil. Equivalent methods and materials may be used only if they adequately promote vegetation growth and protect exposed slopes.

| Materials | Application Rate (Pounds per Acre) |
|---|---|
| Seed Mix | |
| Bromus mollis (Blando Brome) | 40 |
| Trifolium hirtum (Hykon Rose Clover) | 20 |
| Fertilizer | |
| 16-20-0 & 15% Sulphur | 500 |
| Mulch | |
| Straw | 4000 |
| Hydraulic Stabilizing (Non-asphaltic, derived from plants) | |
| M-binder or Sentinel | 75-100 |
| Equivalent Material | Per Manufacturer |

m. Whenever it is not possible to utilize erosion prevention measures, exposed slopes shall employ sediment control devices, such as fiber rolls and silt fences. Fiber rolls and silt fences shall be trenched and keyed into the soil and installed on contour. Silt fences shall be installed approximately 2 to 5 feet from toe of slope.

n. The Permittee shall protect storm drain inlets from potential pollutants until drainage conveyance systems are functional and construction has been completed.

o. Energy dissipaters shall be installed at storm drain outlets which may convey storm water flow leading to soil erosion.

p. Soil and material stockpiles shall be properly protected to minimize sediment and pollutant transport from the construction site.

q. Solid waste, such as trash, discarded building materials and debris, shall be placed in designated collection areas or containers. The construction site shall be cleared of solid waste daily, or as necessary, and regular removal and proper disposal shall be arranged.

r. A concrete washout area, such as a temporary pit, shall be designated to clean concrete trucks and tools. At no time shall concrete products and waste be allowed to enter county waterways such as creeks or

storm drains.

s. Proper application, cleaning and storage of potentially hazardous materials, such as paints and chemicals, shall be conducted to prevent the discharge of pollutants.

t. When utilized, temporary restrooms and sanitary facilities shall be located and maintained to prevent the discharge of pollutants.

u. Appropriate vehicle storage, fueling, maintenance and cleaning areas shall be designated and maintained to prevent discharge of pollutants.

## NOTES

1. BEDDING REQUIREMENTS AS REQUIRED BY AGENCY INSPECTING PIPE. STORM DRAIN BEDDING PER STATE STANDARD PLANS AND SECTION 19 OF THE STATE STANDARD SPECIFICATIONS.

2. TYPE "A1":
   SLURRY CEMENT BACKFILL PER SECTION 19 OF THE STATE STANDARD SPECIFICATIONS; REQUIRED FOR ALL TRENCHES. TYPE A2 BACKFILL MAY BE USED AT CONTRACTOR'S OPTION. IF TYPE A2 IS USED, CONTRACTOR WILL PROVIDE A REPORT FROM A CIVIL ENGINEER LICENSED IN THE STATE OF CALIFORNIA, CERTIFYING THAT CONTRACTOR'S WORK MEETS SPECIFICATIONS. PEA GRAVEL SHALL NOT BE USED FOR STRUCTURE BACKFILL.

   TYPE "A2":
   STRUCTURE BACKFILL MATERIAL PER SECTION 19 OF THE STATE STANDARD SPECIFICATIONS. TYPE "A1" BACKFILL MAY BE USED AT CONTRACTOR'S OPTION. PEA GRAVEL SHALL NOT BE USED FOR STRUCTURE BACKFILL.

3. CLASS 2 AGGREGATE BASE MATERIAL. THICKNESS SHALL BE EQUAL TO THE THICKNESS OF THE EXISTING ROAD BASE, BUT IN NO CASE SHALL THE THICKNESS BE LESS THAN 16".

4. TACK COAT S.S. 1 EMULSIFIED ASPHALT. SEAL JOINTS WITH CRAFCO POLYFLEX TYPE-1, OR EQUAL. AFTER PAVING.

5. TRENCH SHALL BE PAVED WITH ASPHALT CONCRETE WHOSE THICKNESS IS EQUAL TO THE THICKNESS OF THE EXISTING ROAD SURFACE, BUT IN NO CASE SHALL THICKNESS BE LESS THAN THAT SHOWN IN THE TRENCH A.C. PAVING TABLE.

6. REPLACE WITH NATIVE MATERIAL RELATIVE COMPACTED TO 90%.

7. REFER TO DRAWING NO. 219B FOR DIMENSION.

8. STORM DRAIN:
   TWO (2) FEET; SIDE CLEARANCE MAY BE REDUCED TO A MINIMUM OF 6" WHEN SLURRY CEMENT BACKFILL IS USED.

   UTILITIES:
   TWO (2) FOOT MINIMUM TRENCH WIDTH UNLESS SLURRY BACKFILL IS USED.

9. ANY PORTLAND CEMENT CONCRETE ROADWAY REMOVED DURING EXCAVATION SHALL BE REPLACED IN KIND AND THICKNESS PER STATE STANDARD PLANS P3, LONGITUDINAL JOINT DETAIL.

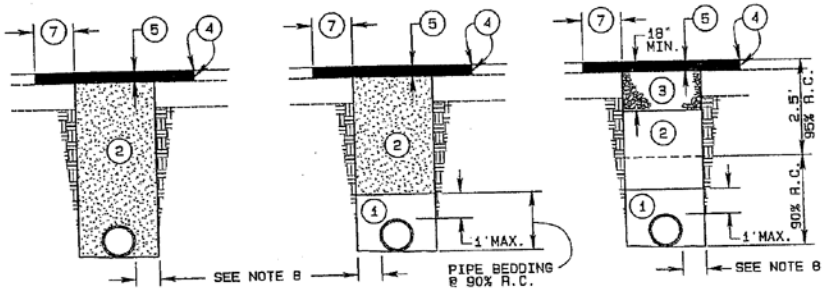


TYPE "A1" (STORM DRAIN)

TYPE "A1-O" (OPTIONAL FOR ALL UNDERGROUND FACILITIES)

TYPE "A2" (OPTIONAL FOR ALL UNDERGROUND FACILITIES)

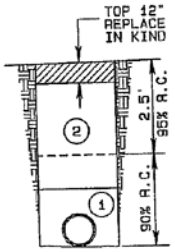


TYPE "B"

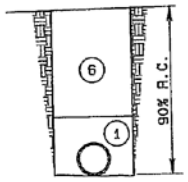


TYPE "C"

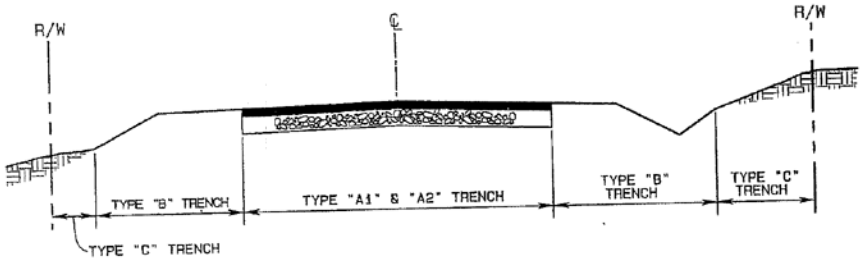


### TRENCH A.C. PAVING TABLE

| STREET TYPE | MIN. A.C. THICKNESS |
|---|---|
| RESIDENTIAL/LOCAL | 0.25' |
| COLLECTOR | 0.35' |
| ARTERIAL | 0.45' |

COUNTY OF SONOMA
DEPARTMENT OF TRANSPORTATION AND PUBLIC WORKS

TRENCH BACKFILL AND PAVING DETAILS

DATE: MAY 2004
REV. MAY 2013

SCALE: NONE

DRAWING NO. 219A

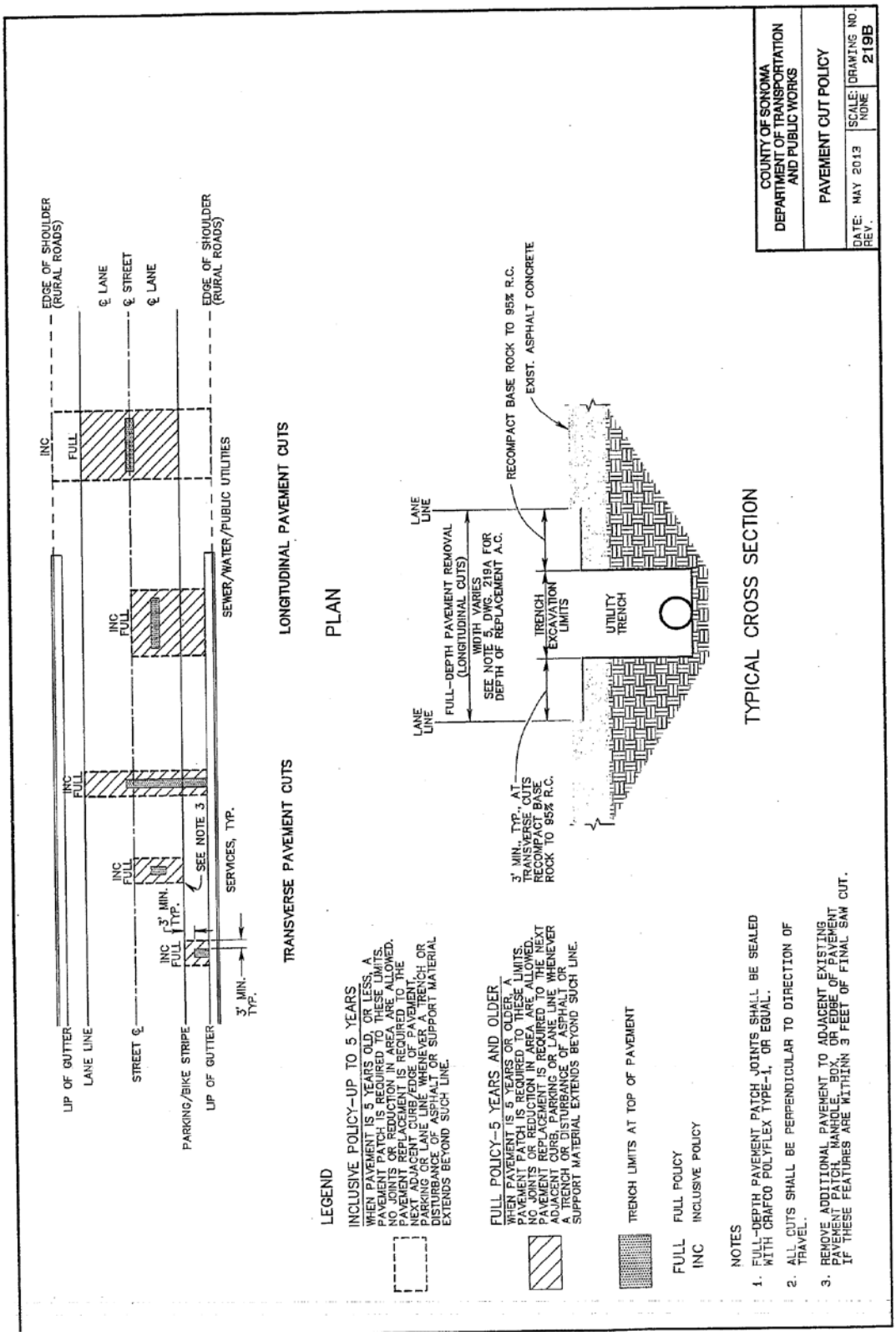
EDGE OF SHOULDER (RURAL ROADS)
℄ LANE
℄ STREET
℄ LANE
EDGE OF SHOULDER (RURAL ROADS)
INC
FULL
INC FULL
SEWER/WATER/PUBLIC UTILITIES
LONGITUDINAL PAVEMENT CUTS
PLAN
LANE LINE
FULL-DEPTH PAVEMENT REMOVAL (LONGITUDINAL CUTS)
WIDTH VARIES
SEE NOTE 3 DWG. 219A FOR DEPTH OF REPLACEMENT A.C.
RECOMPACT BASE ROCK TO 95% R.C.
EXIST. ASPHALT CONCRETE
TRENCH EXCAVATION LIMITS
UTILITY TRENCH
3' MIN., TYP., AT TRANSVERSE CUTS RECOMPACT BASE ROCK TO 95% R.C.
TYPICAL CROSS SECTION
LIP OF GUTTER
LANE LINE
STREET ℄
PARKING/BIKE STRIPE
LIP OF GUTTER
INC FULL
INC FULL
INC FULL
INC FULL
3' MIN. TYP.
SEE NOTE 3
SERVICES, TYP.
3' MIN. TYP.
TRANSVERSE PAVEMENT CUTS
LEGEND
INCLUSIVE POLICY-UP TO 5 YEARS
WHEN PAVEMENT IS 5 YEARS OLD, OR LESS, A PAVEMENT PATCH IS REQUIRED TO THESE LIMITS. NO JOINTS OR REDUCTION IN AREA ARE ALLOWED. PAVEMENT REPLACEMENT IS REQUIRED TO THE NEXT ADJACENT CURB/EDGE OF PAVEMENT, PARKING OR LANE LINE WHENEVER A TRENCH OR DISTURBANCE OF ASPHALT OR SUPPORT MATERIAL EXTENDS BEYOND SUCH LINE.
FULL POLICY-5 YEARS AND OLDER
WHEN PAVEMENT IS 5 YEARS OR OLDER, A PAVEMENT PATCH IS REQUIRED TO THESE LIMITS. NO JOINTS OR REDUCTION IN AREA ARE ALLOWED. PAVEMENT REPLACEMENT IS REQUIRED TO THE NEXT ADJACENT CURB, PARKING OR LANE LINE WHENEVER A TRENCH OR DISTURBANCE OF ASPHALT OR SUPPORT MATERIAL EXTENDS BEYOND SUCH LINE.
TRENCH LIMITS AT TOP OF PAVEMENT
FULL FULL POLICY
INC INCLUSIVE POLICY
NOTES
1. FULL-DEPTH PAVEMENT PATCH JOINTS SHALL BE SEALED WITH CRAFCO POLYFLEX TYPE-1, OR EQUAL.
2. ALL CUTS SHALL BE PERPENDICULAR TO DIRECTION OF TRAVEL.
3. REMOVE ADDITIONAL PAVEMENT TO ADJACENT EXISTING PAVEMENT PATCH, MANHOLE, BOX, OR EDGE OF PAVEMENT IF THESE FEATURES ARE WITHINN 3 FEET OF FINAL SAW CUT.
COUNTY OF SONOMA
DEPARTMENT OF TRANSPORTATION AND PUBLIC WORKS
PAVEMENT CUT POLICY
DATE: MAY 2013
REV.
SCALE: NONE
DRAWING NO. 219B

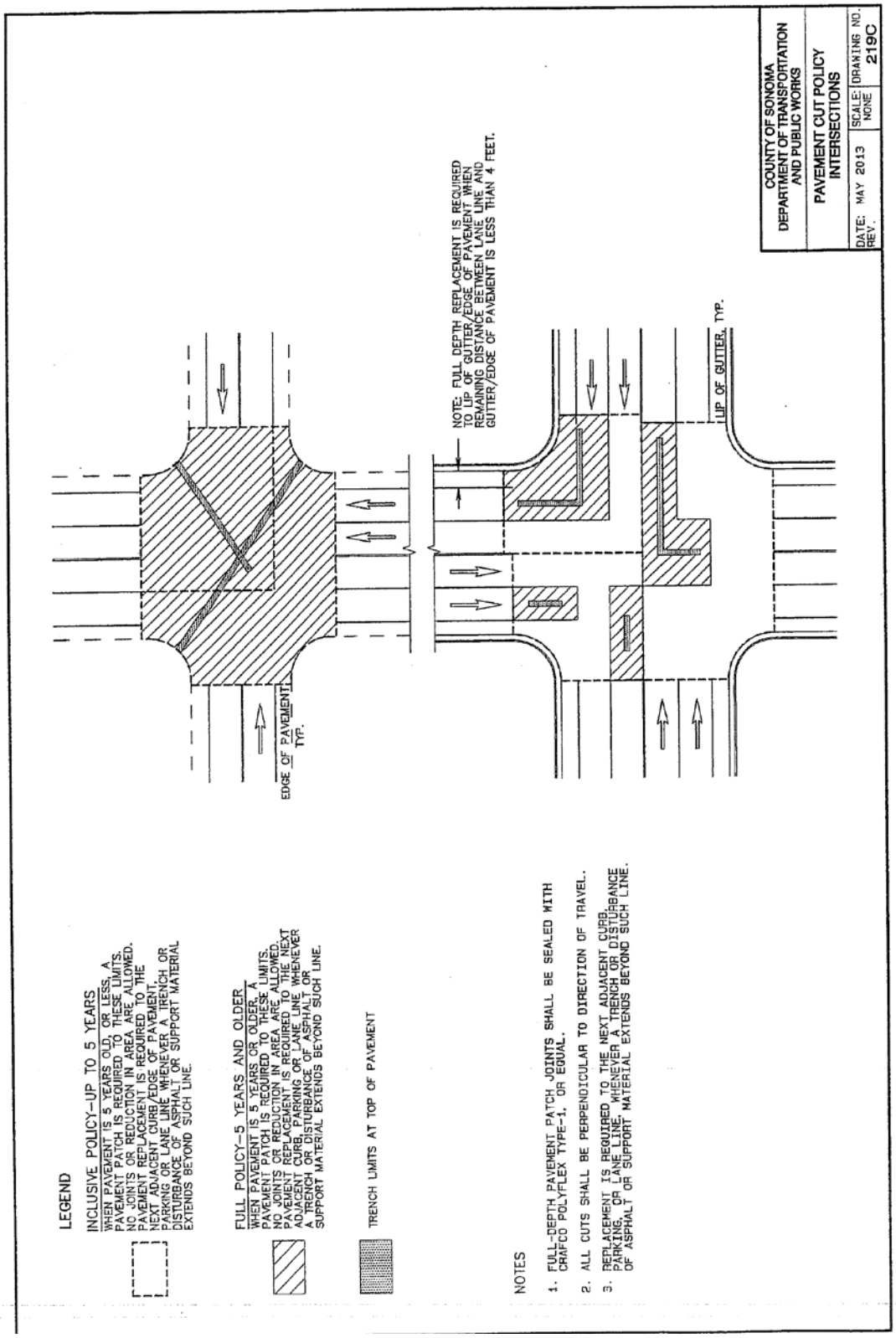
LEGEND
INCLUSIVE POLICY–UP TO 5 YEARS
WHEN PAVEMENT IS 5 YEARS OLD, OR LESS, A PAVEMENT PATCH IS REQUIRED TO THESE LIMITS. NO JOINTS OR REDUCTION IN AREA ARE ALLOWED. PAVEMENT REPLACEMENT IS REQUIRED TO THE NEXT ADJACENT CURB/EDGE OF PAVEMENT, PARKING OR LANE LINE WHENEVER A TRENCH OR DISTURBANCE OF ASPHALT OR SUPPORT MATERIAL EXTENDS BEYOND SUCH LINE.
FULL POLICY–5 YEARS AND OLDER
WHEN PAVEMENT IS 5 YEARS OR OLDER, A PAVEMENT PATCH IS REQUIRED TO THESE LIMITS. NO JOINTS OR REDUCTION IN AREA ARE ALLOWED. PAVEMENT REPLACEMENT IS REQUIRED TO THE NEXT ADJACENT CURB, PARKING OR LANE LINE WHENEVER A TRENCH OR DISTURBANCE OF ASPHALT OR SUPPORT MATERIAL EXTENDS BEYOND SUCH LINE.
TRENCH LIMITS AT TOP OF PAVEMENT
NOTES
1. FULL-DEPTH PAVEMENT PATCH JOINTS SHALL BE SEALED WITH CRAFCO POLYFLEX TYPE-1, OR EQUAL.
2. ALL CUTS SHALL BE PERPENDICULAR TO DIRECTION OF TRAVEL.
3. REPLACEMENT IS REQUIRED TO THE NEXT ADJACENT CURB, PARKING, OR LANE LINE WHENEVER A TRENCH OR DISTURBANCE OF ASPHALT OR SUPPORT MATERIAL EXTENDS BEYOND SUCH LINE.
EDGE OF PAVEMENT, TYP.
NOTE: FULL DEPTH REPLACEMENT IS REQUIRED TO LIP OF GUTTER/EDGE OF PAVEMENT WHEN REMAINING DISTANCE BETWEEN LANE LINE AND GUTTER/EDGE OF PAVEMENT IS LESS THAN 4 FEET.
LIP OF GUTTER, TYP.
COUNTY OF SONOMA
DEPARTMENT OF TRANSPORTATION AND PUBLIC WORKS
PAVEMENT CUT POLICY
INTERSECTIONS
DATE: MAY 2013
REV.
SCALE: NONE
DRAWING NO. 219C

## NOTES

1. BEDDING REQUIREMENTS AS REQUIRED BY AGENCY INSPECTING PIPE. STORM DRAIN BEDDING PER STATE STANDARD PLANS AND SECTION 19 OF THE STATE STANDARD SPECIFICATIONS.
2. TYPE "A1":
   SLURRY CEMENT BACKFILL PER SECTION 19 OF THE STATE STANDARD SPECIFICATIONS; REQUIRED FOR ALL TRENCHES. TYPE A2 BACKFILL MAY BE USED AT CONTRACTOR'S OPTION. IF TYPE A2 IS USED, CONTRACTOR WILL PROVIDE A REPORT FROM A CIVIL ENGINEER LICENSED IN THE STATE OF CALIFORNIA, CERTIFYING THAT CONTRACTOR'S WORK MEETS SPECIFICATIONS. PEA GRAVEL SHALL NOT BE USED FOR STRUCTURE BACKFILL.

   TYPE "A2":
   STRUCTURE BACKFILL MATERIAL PER SECTION 19 OF THE STATE STANDARD SPECIFICATIONS. TYPE "A1" BACKFILL MAY BE USED AT CONTRACTOR'S OPTION. PEA GRAVEL SHALL NOT BE USED FOR STRUCTURE BACKFILL.
3. CLASS 2 AGGREGATE BASE MATERIAL. THICKNESS SHALL BE EQUAL TO THE THICKNESS OF THE EXISTING ROAD BASE, BUT IN NO CASE SHALL THE THICKNESS BE LESS THAN 18".
4. TACK COAT S.S. 1 EMULSIFIED ASPHALT, SEAL JOINTS WITH CRAFCO POLYFLEX TYPE-1, OR EQUAL, AFTER PAVING.
5. TRENCH SHALL BE PAVED WITH ASPHALT CONCRETE WHOSE THICKNESS IS EQUAL TO THE THICKNESS OF THE EXISTING ROAD SURFACE, BUT IN NO CASE SHALL THICKNESS BE LESS THAN THAT SHOWN IN THE TRENCH A.C. PAVING TABLE.
6. REPLACE WITH NATIVE MATERIAL RELATIVE COMPACTED TO 90%.
7. REFER TO DRAWING NO. 219B FOR DIMENSION.
8. STORM DRAIN:
   TWO (2) FEET; SIDE CLEARANCE MAY BE REDUCED TO A MINIMUM OF 6" WHEN SLURRY CEMENT BACKFILL IS USED.

   UTILITIES:
   TWO (2) FOOT MINIMUM TRENCH WIDTH UNLESS SLURRY BACKFILL IS USED.
9. ANY PORTLAND CEMENT CONCRETE ROADWAY REMOVED DURING EXCAVATION SHALL BE REPLACED IN KIND AND THICKNESS PER STATE STANDARD PLANS P3, LONGITUDINAL JOINT DETAIL.

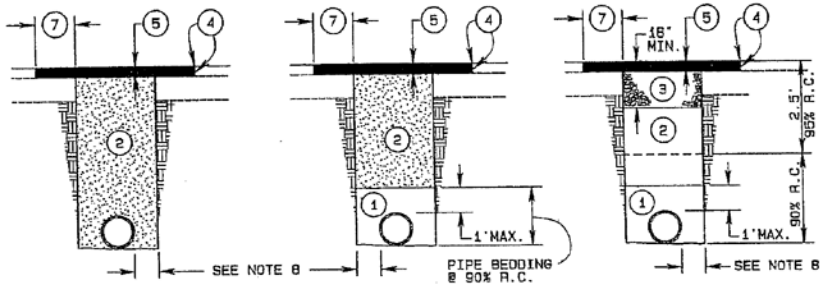


TYPE "A1" (STORM DRAIN)

TYPE "A1-O" (OPTIONAL FOR ALL UNDERGROUND FACILITIES)

TYPE "A2" (OPTIONAL FOR ALL UNDERGROUND FACILITIES)

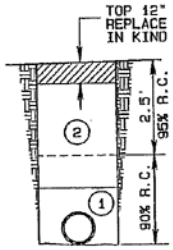


TYPE "B"

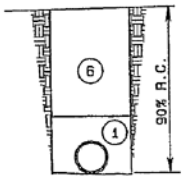


TYPE "C"

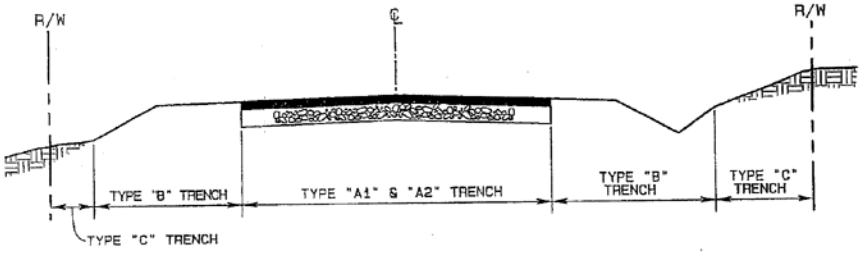


### TRENCH A.C. PAVING TABLE

| STREET TYPE | MIN. A.C. THICKNESS |
|---|---|
| RESIDENTIAL/LOCAL | 0.25' |
| COLLECTOR | 0.35' |
| ARTERIAL | 0.45' |

| COUNTY OF SONOMA DEPARTMENT OF TRANSPORTATION AND PUBLIC WORKS | | |
|---|---|---|
| TRENCH BACKFILL AND PAVING DETAILS | | |
| DATE: MAY 2004 REV. MAY 2013 | SCALE: NONE | DRAWING NO. 219A |

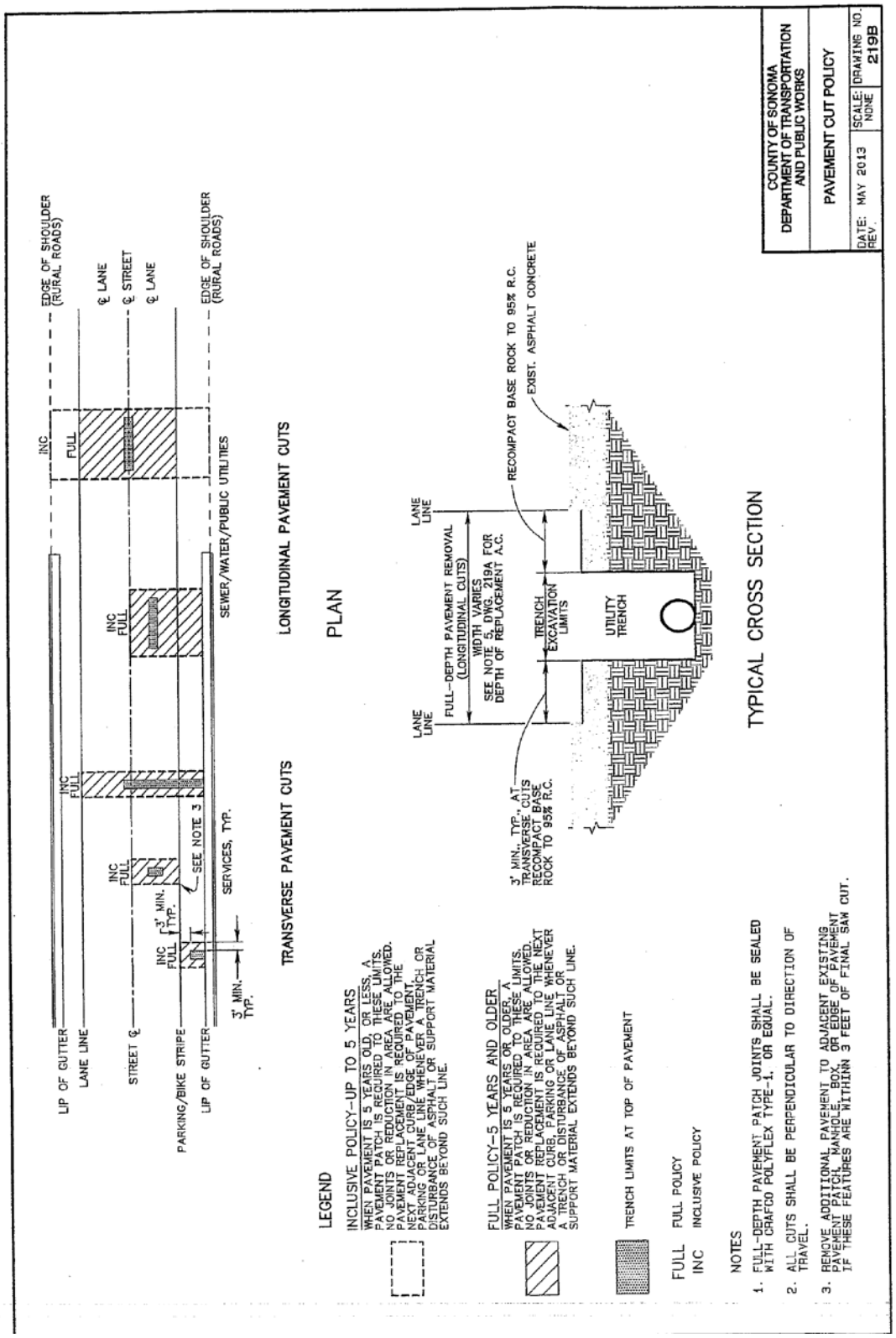
EDGE OF SHOULDER (RURAL ROADS)
℄ LANE
℄ STREET
℄ LANE
EDGE OF SHOULDER (RURAL ROADS)
INC
FULL
INC FULL
SEWER/WATER/PUBLIC UTILITIES
LONGITUDINAL PAVEMENT CUTS
PLAN
INC FULL
INC FULL
3' MIN. TYP.
SEE NOTE 3
SERVICES, TYP.
TRANSVERSE PAVEMENT CUTS
LIP OF GUTTER
LANE LINE
STREET ℄
PARKING/BIKE STRIPE
LIP OF GUTTER
3' MIN. TYP.
LANE LINE
FULL-DEPTH PAVEMENT REMOVAL (LONGITUDINAL CUTS)
WIDTH VARIES
SEE NOTE 5, DWG. 219A FOR DEPTH OF REPLACEMENT A.C.
TRENCH EXCAVATION LIMITS
UTILITY TRENCH
RECOMPACT BASE ROCK TO 95% R.C.
EXIST. ASPHALT CONCRETE
3' MIN. TYP. AT TRANSVERSE CUTS RECOMPACT BASE ROCK TO 95% R.C.
TYPICAL CROSS SECTION
LEGEND
INCLUSIVE POLICY-UP TO 5 YEARS
WHEN PAVEMENT IS 5 YEARS OLD, OR LESS, A PAVEMENT PATCH IS REQUIRED TO THESE LIMITS. NO JOINTS OR REDUCTION IN AREA ARE ALLOWED. PAVEMENT REPLACEMENT IS REQUIRED TO THE NEXT ADJACENT CURB EDGE, TRAFFIC LANE, PARKING OR LANE LINE WHENEVER A TRENCH OR DISTURBANCE OF ASPHALT OR SUPPORT MATERIAL EXTENDS BEYOND SUCH LINE.
FULL POLICY-5 YEARS AND OLDER
WHEN PAVEMENT IS 5 YEARS OR OLDER, A PAVEMENT PATCH IS REQUIRED TO THESE LIMITS. NO JOINTS OR REDUCTION IN AREA ARE ALLOWED. PAVEMENT REPLACEMENT IS REQUIRED TO THE NEXT ADJACENT CURB EDGE, TRAFFIC LANE, PARKING OR LANE LINE WHENEVER A TRENCH OR DISTURBANCE OF ASPHALT OR SUPPORT MATERIAL EXTENDS BEYOND SUCH LINE.
TRENCH LIMITS AT TOP OF PAVEMENT
FULL FULL POLICY
INC INCLUSIVE POLICY
NOTES
1. FULL-DEPTH PAVEMENT PATCH JOINTS SHALL BE SEALED WITH CRAFCO POLYFLEX TYPE-1, OR EQUAL.
2. ALL CUTS SHALL BE PERPENDICULAR TO DIRECTION OF TRAVEL.
3. REMOVE ADDITIONAL PAVEMENT TO ADJACENT EXISTING PAVEMENT PATCH, MANHOLE, BOX, OR EDGE OF PAVEMENT IF THESE FEATURES ARE WITHIN 3 FEET OF FINAL SAW CUT.
COUNTY OF SONOMA
DEPARTMENT OF TRANSPORTATION AND PUBLIC WORKS
PAVEMENT CUT POLICY
DATE: MAY 2013
REV.
SCALE: NONE
DRAWING NO. 219B

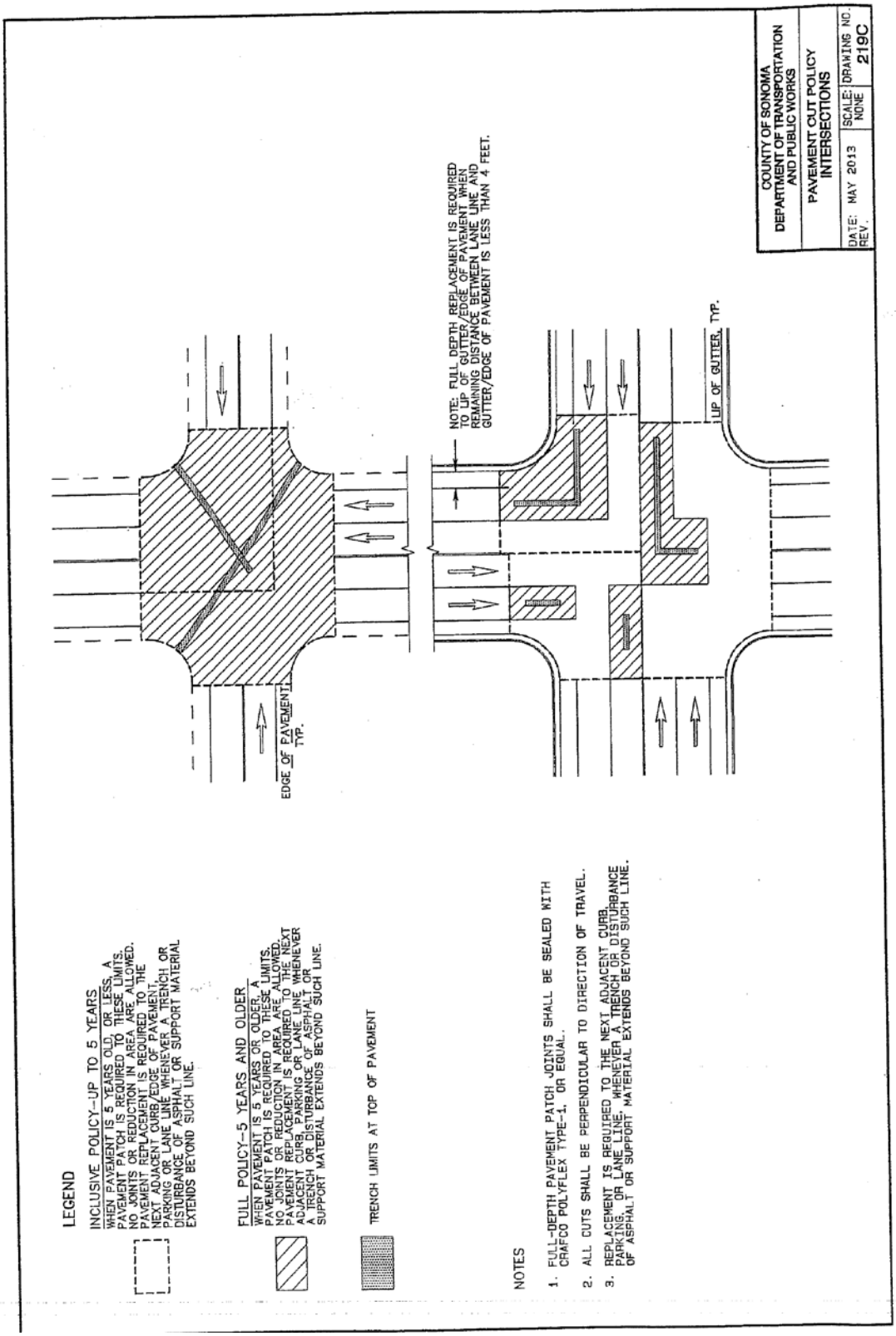
LEGEND
INCLUSIVE POLICY-UP TO 5 YEARS
WHEN PAVEMENT IS 5 YEARS OLD, OR LESS, A PAVEMENT PATCH IS REQUIRED TO THESE LIMITS. NO JOINTS OR REDUCTION IN AREA ARE ALLOWED. PAVEMENT REPLACEMENT IS REQUIRED TO THE NEXT ADJACENT CURB/EDGE OF PAVEMENT, PARKING OR LANE LINE WHENEVER A TRENCH OR DISTURBANCE OF ASPHALT OR SUPPORT MATERIAL EXTENDS BEYOND SUCH LINE.
FULL POLICY-5 YEARS AND OLDER
WHEN PAVEMENT IS 5 YEARS OR OLDER, A PAVEMENT PATCH IS REQUIRED TO THESE LIMITS. NO JOINTS OR REDUCTION IN AREA ARE ALLOWED. PAVEMENT REPLACEMENT IS REQUIRED TO THE NEXT ADJACENT CURB, PARKING OR LANE LINE WHENEVER A TRENCH OR DISTURBANCE OF ASPHALT OR SUPPORT MATERIAL EXTENDS BEYOND SUCH LINE.
TRENCH LIMITS AT TOP OF PAVEMENT
NOTES
1. FULL-DEPTH PAVEMENT PATCH JOINTS SHALL BE SEALED WITH CRAFCO POLYFLEX TYPE-1, OR EQUAL.
2. ALL CUTS SHALL BE PERPENDICULAR TO DIRECTION OF TRAVEL.
3. REPLACEMENT IS REQUIRED TO THE NEXT ADJACENT CURB, PARKING, OR LANE LINE, WHENEVER A TRENCH OR DISTURBANCE OF ASPHALT OR SUPPORT MATERIAL EXTENDS BEYOND SUCH LINE.
EDGE OF PAVEMENT TYP.
NOTE: FULL DEPTH REPLACEMENT IS REQUIRED TO LIP OF GUTTER/EDGE OF PAVEMENT WHEN REMAINING DISTANCE BETWEEN LANE LINE AND GUTTER/EDGE OF PAVEMENT IS LESS THAN 4 FEET.
LIP OF GUTTER TYP.
COUNTY OF SONOMA
DEPARTMENT OF TRANSPORTATION AND PUBLIC WORKS
PAVEMENT CUT POLICY
INTERSECTIONS
DATE: MAY 2013
REV.
SCALE: NONE
DRAWING NO. 219C

ENC15-0035

# County of Sonoma

*Department of Transportation and Public Works - Materials Lab*

**Phone (707) 565-2585 Fax (707) 565-2322**

**Victor Hayes - Lab Supervisor**

## Approved Source Suppliers

**Updated December 2011**

| Supplier | Location | Phone | Asphalt Concrete | Recycled Aggregate Base CL II | Aggregate Base CL II | Aggregate Subbase | Structural Backfill | Controlled Low Density Material | Portland Cement Concrete |
|---|---|---|---|---|---|---|---|---|---|
| BoDean - Blue Rock Quarry* | Forestville | (707) 887 - 2216 | No | No | Yes | Yes | Yes | No | No |
| BoDean - College Ave. | Santa Rosa | (707) 576 - 8205 | Yes | Yes | No | No | No | No | No |
| BoDean - Mark West Quarry | Santa Rosa | (707) 573 - 9733 | No | No | Yes | Yes | Yes | No | No |
| Bohan and Canelis - Austin Creek* | Cazadero | (707) 632 - 5296 | No | No | Yes | Yes | Yes | Yes | Yes |
| Canyon Rock Quarry | Forestville | (707) 887 - 2207 | No | Yes | Yes | Yes | Yes | Yes | Yes |
| Carls Ready Mix | Windsor | (707) 838 - 2359 | No | No | No | No | No | Yes | Yes |
| Northgate Ready Mix | Santa Rosa | (707) 575 - 1399 | No | No | No | No | No | Yes | Yes |
| Nor-Cal Ready Mix | Santa Rosa | (707) 546 - 9422 | No | No | No | No | No | Yes | Yes |
| Sebastopol Ready Mix | Sebastopol | (707) 829 - 7685 | No | No | No | No | No | Yes | Yes |
| Shamrock Materials | Petaluma, Santa Rosa | 800 - 779 - 5777 | No | No | No | No | No | Yes | Yes |
| Stony Point Quarry - Stony Point Rd. | Cotati | (707) 795 - 1775 | No | Yes | Yes | Yes | Yes | No | No |
| Stony Point Quarry - Soils Plus | Sonoma | (707) 996 - 3400 | No | Yes | Yes | Yes | Yes | No | No |
| Superior Supplies | Santa Rosa | (707) 554 - 7864 | No | No | No | No | No | Yes | Yes |
| Syar Industries - Healdsburg Ave. | Healdsburg | (707) 433 - 3366 | Yes | Yes | Yes | Yes | Yes | No | No |
| Syar Industries - Todd Road | Santa Rosa | (707) 584 - 0262 | Yes | Yes | No | No | No | No | No |
| Wheeler - Zamaroni | Santa Rosa | (707) 543 - 8400 | No | Yes | No | No | No | No | No |

The suppliers listed above have been tested by the County of Sonoma Materials Testing Lab. Their materials complied with our requirements at the time of testing (primarily the *State of California Standard Specifications* ). This list does not include all of the suppliers in the area or all the materials that they supply, only the suppliers and the materials that have been tested by our lab. Appearance on this list in no way guarantees the materials currently meet all the requirements for any specific project. The County also reserves the right to sample and test any materials when they are used. ***Class II permeable base available***

SECTION 01200

# PRICE AND PAYMENT PROCEDURES

## PART 1 GENERAL

### 1.1 SUMMARY

A. Section includes:
   1. Description of requirements and procedures for determining amount of Work performed and for obtaining payment for Work performed.
   2. Contingency Reserve

### 1.2 REFERENCES

A. California Public Contract Code
B. Code of Civil Procedure

### 1.3 SCOPE OF WORK

Work under Contract Documents, or under any Bid item, allowance, or Alternate, shall include all labor, materials, taxes, transport, handling, storage, supervision, administration, and all other items necessary for the satisfactory completion of Work, whether or not expressly specified or indicated.

### 1.4 DETERMINATION OF QUANTITIES

Quantity of Work to be paid for under any item for which a unit price is fixed in Contract Documents shall be number, as determined by Owner, of units of Work satisfactorily completed in accordance with Contract Documents or as directed by Owner. Unless otherwise provided, determination of number of units of Work so completed will be based, so far as practicable, on actual measurement or count within prescribed or ordered limits, and no payment will be made for Work done outside of limits. Measurements and computations will be made by methods set forth in Contract Documents, including without limitation this Section 01200. If methods are not so set forth, measurements shall be made in any manner which Owner considers appropriate for class of Work measured (e.g., pre-assigned values, percentage completion, units completed or incremental Milestones). Contractor must immediately inform Owner of any disputes regarding quantity measurements and shall immediately supply Owner with any documentation supporting the disputed measurements.

### 1.5 SCOPE OF PAYMENT

A. Except as otherwise expressly stated in Section 01100 (Summary), payment to Contractor at the unit price or other price fixed in Contract Documents for performing Work required under any item, or (if the Contract is on a single lump sum price basis) at the lump sum price fixed in the Contract Documents for performing all Work required under Contract Documents, and as either may be adjusted pursuant to any approved Change Order or Construction Change Directive, shall be full compensation for completing, in accordance with Contract Documents, all Work required under the item or under Contract Documents, and for all expense incurred by Contractor for any purpose in connection with the performance and completion of said Work, including all incidental Work necessary for completion of the Work.

B. The Contract Sum, whether lump sum, unit price or otherwise, shall be deemed to include all costs necessary to complete required Work, all costs (if any) for loss or damage arising from nature of Work or prosecution of the Work, and from action of elements. Unless Contract Documents expressly provide otherwise, the Contract Sum shall be deemed to include:
   1. Any and all costs arising from any unforeseen difficulties which may be encountered during, and all risks of any description connected with, prosecution of Work or prosecution of Bid item (whether lump sum or unit price) until acceptance by Owner;
   2. All expenses incurred due to suspension, or discontinuance of Work or discontinuance of Bid item (whether lump sum or unit price) as provided in Contract Documents;
   3. Escalation to allow for cost increases between time of Contract Award and completion of Work or completion of Bid item (whether lump sum or unit price).

C. Whenever it is specified herein that Contractor is to do Work or furnish materials of any class for which no price is fixed in Contract Documents, it shall be understood that Contractor is to do such Work or furnish such materials without extra charge or allowance or direct payment of any sort, and that cost of doing Work or furnishing materials is to be included in price Bid, unless it is expressly specified herein, in particular cases, that Work or material is to be paid for as extra Work.

D. Unit Prices shall apply to Work covered by unit prices so long as actual quantities performed on the Project are not less than 75 percent or greater than 125 percent of the estimated quantities contained in Document 00400 (Bid Form) or otherwise referenced in Section 01100 (Summary). If actual quantities exceed these parameters, then the unit price shall be adjusted by an amount to reflect the Contractor's incremental cost differential resulting from increased or decreased economies of scale. For quantities reduced to less than 75 percent of the estimated Bid quantity, the payment for the total pay quantity of such item of Work will in no case exceed the payment that would have been made for the performance of 75 percent of the estimated Bid quantity for such item at the original Contract unit price.

E. No payment shall be made for materials or equipment not yet incorporated into the Work, except as specified in Section 01100 (Summary).

F. For any materials and equipment referenced in Section 01100 (Summary) as subject to payment prior to incorporation into the Work, where Contractor requests payment on the basis of such materials and equipment not incorporated in the Work, Contractor must satisfy the following conditions:
   1. The materials and/or equipment shall be delivered and suitably stored at the Site or at another local location agreed to in writing, for example, a mutually acceptable warehouse;
   2. Full title to the materials and/or equipment shall vest in Owner at the time of delivery to the Site, warehouse or other storage location;
   3. Obtain a negotiable warehouse receipt, endorsed over to Owner for materials and/or equipment stored in an Off Site warehouse. No payment will be made until such endorsed receipts are delivered to Owner;
   4. Stockpiled materials and/or equipment shall be available for Owner inspection, but Owner shall have no obligation to inspect them and its inspection or failure to inspect shall not relieve Contractor of any obligations under the Contract Documents. Materials and/or equipment shall be segregated and labeled or tagged to identify these specific Contract Documents;

5. After delivery of materials and/or equipment, if any inherent or acquired defects are discovered, Defective materials and/or equipment shall be removed and replaced with suitable materials and/or equipment at Contractor's expense;
6. At Contractor's expense, insure the materials and/or equipment against theft, fire, flood, vandalism, and malicious mischief, as well as any other coverages required under the Contract Documents;
7. Contractor's Application for Payment shall be accompanied by a bill of sale, invoice or other documentation warranting that Owner has received the materials and equipment free and clear of all liens and evidence that the materials and equipment are covered by appropriate property insurance and other arrangements to protect Owner's interest therein, all of which must be satisfactory to Owner. This documentation shall include, but not be limited to, conditional releases of mechanics' liens and stop notices from all those providing materials and equipment as to which the Application for Payment relates, as well as unconditional releases of the same from the same as to the previous Application for Payment for which they have not already been provided.

G. Amounts previously paid for materials and equipment prior to incorporation into the Work shall be deducted from amounts otherwise due Contractor as they are incorporated.

## 1.6 BASIS OF PAYMENT

A. Unit Price Quantities: When estimated quantity for specific portions of Work is listed in Document 00400 (Bid Form), quantity of Work to be paid for shall be actual number of units satisfactorily completed, as determined by Owner and certified by Contractor, in accordance with Contract Documents.

B. Lump Sum: When estimated quantity for specific portion of Work is not indicated and unit is designated as lump sum, payment will be on a lump sum basis for Work satisfactorily completed in accordance with Contract Documents.

C. Allowances: Allowance items (if any) will be paid for as provided in Section 01100 (Summary). Funds authorized for Allowance Work will not be released for Contract payments unless Owner has authorized Allowance Work in writing.

D. Owner does not expressly, or by implication, agree, warrant, or represent in any manner, that actual amount of Work will correspond with amount shown or estimated and reserves right to increase or decrease amount of any class or portion of Work, to leave out entire Bid item or items, or to add work not originally included in Bid or Contract Documents, when in its judgment such change is in best interest of Owner. No change in Work shall be considered a waiver of any other condition of Contract Documents. No claim shall be made for anticipated profit, for loss of profit, for damages, or for extra payment whatever, except as otherwise expressly provided for in Contract Documents, because of any differences between amount of Work actually done and estimated amount as set forth herein, or for elimination of Bid items.

## 1.7 PROGRESS PAYMENTS

A. Owner's General Manager is authorized to approve progress payments in conformance with Contract Documents and the Auditor/Controller of the County of Sonoma is authorized to process such payments upon their submission by the General Manager.

B. If requested by Contractor, progress payments will be made monthly.

C. Schedule of Values:
   1. Within the time set forth in Document 00700 (General Conditions), submit a detailed breakdown of Contractor's Bid by scheduled Work items and/or activities, including coordination responsibilities and Project Record Documents responsibilities. Where

more than one Subcontractor comprises the work of a Work item or activity, the Schedule of Values shall show a separate line item for each subcontract. Furnish such breakdown of the total Contract Sum by assigning dollar values (cost estimates) to each applicable Progress Schedule network activity, which cumulative sum equals the total Contract Sum. The format and detail of the breakdown shall be as directed by Owner to facilitate and clarify future progress payments to Contractor for direct Work under Contract Documents. This breakdown shall be referred to as the Schedule of Values.

2. Contractor's overhead, profit, insurance, cost of bonds (except to the extent expressly identified in a Bid item) and/or other financing, as well as "general conditions costs," (e.g., Site cleanup and maintenance, temporary roads and access, off-Site access roads, temporary power and lighting, security, and the like), shall be prorated through all activities so that the sum of all the Schedule of Values line items equals Contractor's total Contract Sum, less any allowances designated by Owner. Scheduling, record documents and quality assurance control shall be separate line items.
3. Owner will review the breakdown in conjunction with the Progress Schedule to ensure that the dollar amounts of this Schedule of Values are, in fact, fair market cost allocations for the Work items listed. Upon favorable review by Owner, Owner will accept this Schedule of Values for use. Owner shall be the sole judge of fair market cost allocations.
4. Owner will reject any attempt to increase the cost of early activities, i.e., "front loading," resulting in a complete reallocation of moneys until such "front loading" is corrected. Repeated attempts at "front loading" may result in suspension or termination of the Work for default, or refusal to process progress payments until such time as the Schedule of Values is acceptable to Owner.

D. Monthly Report Sheets and Applications for Payment: Contractor shall establish and maintain records of cost of the Work in accordance with generally accepted accounting practices; reconcile the amount of Work completed monthly with Owner, and sign Owner's monthly report sheet certifying the Work is done. Monthly report sheets shall be considered the true record of the Cost of the Work and Contractor shall submit in a form acceptable to Owner an itemized cost breakdown of Contractor's record of Cost of the Work together with supporting data and any certification required by Owner. In addition:

1. On or before the sooner of (a) the 20th Day of each month and (b) receipt of Owner's approval of the updated Schedule as required by Section 01320 (Progress Schedules and Reports), Owner and Contractor will reconcile any differences in the field, based on the reconciled monthly report sheets, and Contractor shall submit to Owner an Application for Payment for the cost of the Work put in place during the period from the 15th Day of the previous month to the 15th Day of the current month, along with the Owner-approved updated Schedule. Such Applications for Payment shall be for the total value of activities completed or partially completed, including approved activity costs, based upon Schedule of Values prices (or Bid item prices if unit price) of all labor and materials incorporated in the Work up until midnight of the last Day of that one month period, less the aggregate of previous payments. Accumulated retainage shall be shown as separate item in payment summary. If Contractor is late submitting its Application for Payment, that Application may be processed at any time during the succeeding one-month period, resulting in processing of Contractor's Application for Payment being delayed for more than a Day for Day basis.
2. Applications for Payment may include, but are not necessarily limited to the following:
   a. Material, equipment, and labor incorporated into the Work, less any previous payments for the same.

b. Up to 75 percent of the cost of equipment identified in paragraph 1.5F of this Section 01200 (if any), if purchased and delivered to the Site or stored off Site, as may be approved by Owner.
c. Up to 50 percent of the cost of materials identified in paragraph 1.5F of this Section 01200 (if any), specifically fabricated for the Project that are not yet incorporated into the Work.

3. At the time any Application for Payment is submitted, certify in writing the accuracy of the Application and that Contractor has fulfilled all scheduling requirements of Document 00700 (General Conditions) and Section 01320 (Progress Schedules and Reports), including updates and revisions. A responsible officer of Contractor shall execute the certification.
4. No progress payment will be processed prior to Owner receiving all requested, acceptable schedule update information. Failure to submit a schedule update complying with Section 01320 justifies denying the entire Application for Payment, or in Owner's discretion withholding amounts as described in paragraph 1.7E.11 of this Section 01200.
5. Each Application for Payment shall list each Change Order and Construction Change Directive ("CCD") executed prior to date of submission, including the Change Order/CCD Number, and a description of the Work activities, consistent with the descriptions of original Work activities. Submit a monthly Change Order/CCD status log to Owner.
6. If Owner requires substantiating data, submit information requested by Owner, with cover letter identifying Project, Application for Payment number and date, and detailed list of enclosures.
7. If Contractor fails or refuses to participate in monthly Work reconciliations or other construction progress evaluation with Owner, Contractor shall not receive current payment until Contractor has participated fully in providing construction progress information and schedule update information to Owner.

E. Progress Payments

1. Owner will review Contractor's Application for Payment following receipt. If adjustments need to be made to percent of completion of each activity, Owner will make appropriate notations and return to Contractor. Contractor shall revise and resubmit. All parties shall update percentage of completion values in the same manner, i.e., express value of an accumulated percentage of completion to date.
2. Each Application for Payment may be reviewed by Owner and/or inspectors to determine whether the Application for Payment is proper, and shall be rejected, revised, or approved by Owner pursuant to the Schedule of Values prepared in accordance with paragraph 1.7C of this Section 01200.
3. If it is determined that the Application for Payment is not proper and suitable for payment, Owner will return it to the Contractor as soon as practicable, but no later than seven Days after receipt, together with a document setting forth in writing the reasons why the Application for Payment is not proper. If Owner determines that portions of the Application for Payment are not proper or not due under the Contract Documents, then Owner may approve the other portions of the Application for Payment, and in the case of disputed items or Defective Work not remedied, may withhold up to 150 percent of the disputed amount from the progress payment.
4. Pursuant to California Public Contract Code Section 20104.50, if Owner fails to make any progress payment within 30 Days after receipt of an undisputed and properly submitted

Application for Payment from Contractor, Owner shall pay interest to the Contractor equivalent to the legal rates set forth in subdivision (a) of Section 685.010 of the Code of Civil Procedure. The 30-Day period shall be reduced by the number of Days by which Owner exceeds the seven-Day return requirement set forth herein.

5. As soon as practicable after approval of each Application for Payment for progress payments, Owner will pay to Contractor in manner provided by law, an amount equal to 95 percent of the amounts otherwise due as provided in the Contract Documents, or a lesser amount if so provided in Contract Documents, provided that payments may at any time be withheld if, in judgment of Owner, Work is not proceeding in accordance with Contract, or Contractor is not complying with requirements of Contract, or to comply with stop notices or to offset liquidated damages accruing or expected.
6. Before any progress payment or final payment is due or made, Contractor shall submit satisfactory evidence that Contractor is not delinquent in payments to employees, Subcontractors, suppliers, or creditors for labor and materials incorporated into Work. This specifically includes, without limitation, conditional lien release forms for the current progress payment and unconditional release forms for past progress payments.
7. Owner reserves and shall have the right to withhold payment for any equipment and/or specifically fabricated materials that, in the sole judgment of Owner, are not adequately and properly protected against weather and/or damage prior to or following incorporation into the Work.
8. Granting of progress payment or payments by Owner, or receipt thereof by Contractor, shall not be understood as constituting in any sense acceptance of Work or of any portion thereof, and shall in no way lessen liability of Contractor to replace unsatisfactory Work or material, though unsatisfactory character of Work or material may have been apparent or detected at time payment was made.
9. When Owner shall charge sum of money against Contractor under any provision of Contract Documents, amount of charge shall be deducted and retained by Owner from amount of next succeeding progress payment or from any other moneys due or that may become due Contractor under Contract. If, on completion or termination of Contract, such moneys due Contractor are found insufficient to cover Owner's charges against it, Owner shall have right to recover balance from Contractor or Sureties.
10. If Contractor fails to submit an acceptable Progress Schedule update, or fails to bring an acceptable Project Record Drawings update to Progress Payment Meeting, Owner may retain 5% of each Progress Payment amount thereafter (in addition to any other retention) until Owner's acceptance of a Progress Schedule or Project Record Drawings update. This retention shall apply cumulatively.

## 1.8 FINAL PAYMENT

A. As soon as practicable after all required Work is completed in accordance with Contract Documents, including punchlist, testing, record documents and Contractor maintenance after Final Acceptance, Owner will pay to Contractor, in manner provided by law, unpaid balance of Contract Sum of Work (including without limitation retentions), or whole Contract Sum of Work if no progress payment has been made, determined in accordance with terms of Contract Documents, less sums as may be lawfully retained under any provisions of Contract Documents or by law.

B. Prior progress payments shall be subject to correction in the final payment. Owner's determination of amount due as final payment shall be final and conclusive evidence of

amount of Work performed by Contractor under Contract Documents and shall be full measure of compensation to be received by Contractor.

C. Contractor and each assignee under an assignment in effect at time of final payment shall execute and deliver at time of final payment, and as a condition precedent to final payment, Document 00650 (Agreement and Release of Any and All Claims).

### 1.9 EFFECT OF PAYMENT

A. Payment will be made by Owner, based on Owner's observations at the Site and the data comprising the Application for Payment. Payment will not be a representation that Owner has:
   1. Made exhaustive or continuous on-Site inspections to check the quality or quantity of Work;
   2. Reviewed construction means, methods, techniques, sequences, or procedures;
   3. Reviewed copies of requisitions received from Subcontractors and material suppliers and other data requested by Owner to substantiate Contractor's right to payment; or
   4. Made examination to ascertain how or for what purpose Contractor has used money previously paid on account of the Contract Sum.

### 1.10 CONTINGENCY RESERVE

A. Owner will authorize and direct Contractor regarding provisions in this paragraph 1.10.
B. Contingency Reserve Amount: as listed in Document 00520 (Agreement).
C. Cost shall be determined for CCD Work as provided in Section 01250 (Modification Procedures) or on a time-and-materials basis if agreed by Contractor and Owner.
D. Prior to final payment, an appropriate Change Order will be issued to reflect actual amounts due Contractor on account of Work covered by this Contingency Reserve, and the Contract Sum will be correspondingly adjusted.

## PART 2 PRODUCTS – NOT USED

## PART 3 EXECUTION – NOT USED

END OF SECTION

SECTION 01250

# MODIFICATION PROCEDURES

## PART 1 GENERAL

### 1.1 SUMMARY

A. Section includes:
   1. Description of general procedural requirements for alterations, Modifications, and extras.

### 1.2 GENERAL

A. Any change in scope of Work or deviation from Contract Documents including, without limitation, extra Work, or alterations or additions to or deductions from the original Work, shall not invalidate the original Contract, and shall be performed under the terms of the Contract Documents.
B. Only Contractor or Owner may initiate changes in scope of Work or deviation from Contract Documents.
   1. Contractor may initiate changes by submitting RFIs, Notice of Differing Site Conditions, or Notice of Hazardous Waste or Materials Conditions.
      a. RFIs shall be submitted to seek clarification of or request changes in the Contract Documents.
      b. Notices of Differing Site Conditions shall be submitted in accordance with Document 00700 (General Conditions).
      c. Notices of Hazardous Waste or Materials Conditions shall be submitted in accordance with Document 00700 (General Conditions).
   2. Contractor shall be responsible for its costs to implement and administer RFIs throughout the Contract duration. Regardless of the number of RFIs submitted, Contractor shall not be entitled to additional compensation for administrative costs. Contractor shall be responsible for both Owner and its Engineer's administrative costs for answering RFIs where the answer could reasonably be found by reviewing the Contract Documents, as determined by Owner; at Owner's discretion, such costs may be deducted from progress payments or final payment.
   3. Owner may initiate changes by issuing a Supplemental Instruction, which may revise, add to or subtract from the Work.
   4. Owner may initiate changes in the Work or Contract Time by issuing RFPs to Contractor. Such RFPs will detail all proposed changes in the Work and request a quotation of changes in Contract Sum and Contract Time from Contractor.
   5. Owner may also, by Construction Change Directive ("CCD"), order changes in the Work within the general scope of the Contract consisting of additions, deletions, or other revisions, the Contract Sum and Contract Time being adjusted accordingly. A CCD shall be used in the absence of total agreement on the terms of a Change Order and may, upon notice, consist of a Change Order executed by Owner only.

### 1.3 PROCEDURES

A. Cost Proposal and Procedures: Whenever Contractor is required in this Section 01250 to prepare a Cost Proposal, and whenever Contractor is entitled to submit a Cost Proposal and elects to do so, Contractor shall prepare and submit to Owner for consideration a Cost Proposal using the form attached to this Section 01250. All Cost Proposals must contain a

complete breakdown of costs of credits, deducts, and extras; and itemizing materials, labor, taxes, overhead and profit. All Subcontractor Work shall be so indicated. Individual entries on the Cost Proposal form shall be determined as provided in paragraphs 1.4 and 1.5 of this Section 01250. After receipt of a Cost Proposal with a detailed breakdown, Owner will act promptly thereon.

1. If Owner accepts a Cost Proposal, Owner will prepare Change Order for Owner and Contractor signatures.
2. If Cost Proposal is not acceptable to Owner because it does not agree with cost and/or time included in Cost Proposal, Owner will submit in a response what it believes to be a reasonable cost and/or adjustment, if any. Except as otherwise provided in this Section 01250, Contractor shall have seven Days in which to respond to Owner with a revised Cost Proposal.
3. When necessity to proceed with a change does not allow the Owner sufficient time to conduct a proper check of a Cost Proposal (or revised Cost Proposal), Owner may order Contractor to proceed on basis to be determined at earliest practical date. In this event, value of change, with corresponding equitable adjustment to Contract, shall not be more than increase or less than decrease proposed.

B. Request for Information (RFI): Whenever Contractor requires information regarding the Project or Contract Documents, or receives a request for information from a Subcontractor, Contractor may prepare and deliver an RFI to Owner, using the Contractor interface for Owner's project management software. Contractor must submit time critical RFIs at least 30 Days before scheduled start date of the affected Work activity. Contractor shall reference each RFI to an activity of Progress Schedule and shall note time criticality of the RFI, indicating time within which a response is required. Contractor's failure to reference RFI to an activity on the Progress Schedule and note time criticality on the RFI shall constitute Contractor's waiver of any claim for time delay or interruption to the Work resulting from any delay in responding to the RFI.

1. Owner will respond within 15 Days from receipt of RFI with a written response to Contractor. Contractor shall distribute response to all appropriate Subcontractors.
2. If Contractor is satisfied with the response and does not request change in Contract Sum or Contract Time, then the response shall be executed without a change.
3. If Contractor believes the response is incomplete, Contractor shall issue another RFI to Owner clarifying original RFI. Additionally, Owner may return RFI requesting additional information should original RFI be inadequate in describing condition.
4. If Contractor believes that the response results in change in Contract Sum or Contract Time, Contractor shall notify Owner in writing within 15 Days after receiving the response. If Owner disagrees with Contractor, then Contractor may give notice of intent to submit a Claim as described in Article 12 of Document 00700 (General Conditions), and submit its Claim within 30 Days. If Owner agrees with Contractor, then Contractor must submit a Cost Proposal within 21 Days of receiving the response to the RFI. Contractor's failure to deliver either the foregoing notice and Claim or Cost Proposal by the respective deadlines stated in the foregoing sentences shall result in waiver of the right to file a Cost Proposal or Claim.

C. Supplemental Instruction: Owner may issue Supplemental Instruction to Contractor.

1. If Contractor is satisfied with Supplemental Instruction and does not request change in Contract Sum or Contract Time, then Supplemental Instruction shall be executed without a Change Order.

2. If Contractor believes that Supplemental Instruction results in change in Contract Sum or Contract Time, then Contractor must submit a Cost Proposal to Owner within 21 Days of receiving the Supplemental Instruction.

D. Construction Change Directives: If at any time Owner believes in good faith that a timely Change Order will not be agreed upon using the foregoing procedures, Owner may issue a CCD with its estimated cost and/or time adjustment. Upon receipt of CCD, Contractor shall promptly proceed with the change of Work involved and concurrently respond to Owner's CCD within 10 Days.
   1. Contractor's response must be any one of following:
      a. Return CCD signed, thereby accepting Owner's response, time, and cost.
      b. Submit a (revised if applicable) Cost Proposal with supporting documentation (if applicable, reference original Cost Proposal number followed by letter A, B, etc. for each revision), if Owner so requests.
      c. Give notice of intent to submit a Claim as described in Article 12 of Document 00700 (General Conditions), and submit its Claim within 30 Days.
   2. If the CCD provides for an adjustment to the Contract Sum, the adjustment shall be based on one of the following methods:
      a. Mutual acceptance of a lump sum properly itemized and supported by sufficient substantiating data to permit evaluation.
      b. Unit prices stated in the Contract Documents or subsequently agreed upon.
      c. Cost to be determined in a manner agreed.
   3. CCD signed by Contractor indicates the agreement of Contractor therewith, including adjustment in Contract Sum and Contract Time or the method for determining them. Such agreement shall be effective immediately and shall be recorded as a Change Order.
   4. If Contractor does not respond promptly or disagrees with the method for adjustment in the Contract Sum, the method and the adjustment shall be determined by Owner on the basis of reasonable expenditures and savings of those performing the Work attributable to the change including, in case of an increase in the Contract Sum, a reasonable allowance for overhead and profit. If the parties still do not agree on the price for a CCD, Contractor may file a Claim per Article 12 of Document 00700 (General Conditions). Contractor shall keep and present, in such form as Owner may prescribe, an itemized accounting together with appropriate supporting data. Unless otherwise provided in the Contract Documents, costs for the purposes of this paragraph shall be limited to those provided in paragraphs 1.4 and 1.5 of this Section 01250.
   5. Pending final determination of cost to Owner, amounts not in dispute may be included in Applications for Payment. The amount of credit to be allowed by Contractor to Owner for a deletion or change that results in a net decrease in the Contract Sum shall be actual net cost as confirmed by Owner. When both additions and credits covering related Work or substitutions are involved in a change, the allowance for overhead and profit shall be figured on the basis of net increase, if any, with respect to that change.

E. Owner Requested RFP: Contractor shall furnish a Cost Proposal within 21 Business Days of Owner's RFP. Upon approval of Cost Proposal, Owner will issue a Change Order directing Contractor to proceed with extra Work. If the parties do not agree on the price, Owner may either issue a CCD or decide the issue per Article 12 of Document 00700 (General Conditions). Contractor shall perform the changed Work notwithstanding any claims or disagreements of any nature.

F. Differing Site Conditions: Contractor shall submit Notices of Differing Site Conditions to resolve problems regarding differing underground Site conditions encountered in the

execution of the Work pursuant to paragraph 13.4 of Document 00700 (General Conditions), which shall govern. If Owner determines that a change in Contract Sum or Contract Time is justified, Owner will issue RFP or CCD.

G. Hazardous Waste Conditions: Contractor shall submit Notices of Hazardous Waste or Materials Conditions to resolve problems regarding hazardous materials encountered in the execution of the Work pursuant to paragraph 13.5 of Document 00700 (General Conditions), which shall govern. If Owner determines that a change in Contract Sum or Contract Time is justified, Owner will issue RFP or CCD.

H. All Changes:
   1. Documentation of Change in Contract Sum and Contract Time:
      a. Contractor shall maintain detailed records of Work performed on a time-and-material basis.
      b. Contractor shall document each proposal for a change in cost or time with sufficient data to allow evaluation of the proposal.
      c. Contractor shall, on request, provide additional data to support computations for:
         1) Quantities of products, materials, labor, and equipment.
         2) Taxes.
         3) Justification for any change in Contract Time and new Progress Schedule showing revision due, if any.
         4) Credit for deletions from Contract, similarly documented.
      d. Contractor shall support each claim for additional costs, and for Work performed on a cost-and-percentage basis, with additional information including:
         1) Credit for deletions from Contract, similarly documented.
         2) Origin and date of claim.
         3) Dates and times Work was performed and by whom.
         4) Time records and wage rates paid.
         5) Invoices and receipts for products, materials, equipment, and subcontracts, similarly documented.

I. Correlation of Other Items:
   1. Contractor shall revise Schedule of Values and Application for Payment forms to record each authorized Change Order or CCD as a separate line item and adjust the Contract Sum as shown thereon prior to the next monthly pay period.
   2. Contractor shall revise the Progress Schedules prior to the next monthly pay period.
   3. Contractor shall enter changes in Project Record Documents prior to the next monthly pay period.

J. Responses: For all responses for which the Contract Documents, including without limitation this Section 01250, do not provide a specific time period, recipients shall respond within a reasonable time.

## 1.4 COST DETERMINATION

A. Total cost of extra Work or of Work omitted shall be the sum of labor costs, material costs, equipment rental costs, and specialist costs as defined herein plus overhead and profit as allowed herein. This limit applies in all cases of claims for extra Work, whether calculating Cost Proposals, Change Orders or CCDs, or calculating claims of all types, and applies even in the event of fault, negligence, strict liability, or tort claims of all kinds, including strict liability or negligence. Contractor may recover no other costs arising out of or connected with the performance of extra Work, of any nature. No special, incidental or consequential damages may be claimed or recovered against Owner, its representatives or agents, whether

arising from breach of Contract, negligence, or strict liability, unless specifically authorized in the Contract Documents.

B. Markup for Overhead and Profit: (Overhead shall be as defined in paragraph 1.8 of this Section 01250)
   1. Markup for overhead and profit on labor for extra Work shall not exceed 15 percent.
   2. Markup for overhead and profit on materials for extra Work shall not exceed 15 percent.
   3. Markup for overhead and profit on owner-operated equipment for extra Work shall not exceed 15 percent.
   4. Markup for overhead and profit on equipment for extra Work shall not exceed 10 percent.
   5. When extra Work is performed by a first tier Subcontractor, Contractor shall receive a 5 percent markup on Subcontractors' total costs of extra Work. First tier Subcontractor's markup on its Work shall not exceed percentages listed in paragraphs 1.4B.1, 1.4B.2, 1.4B.3, and 1.4B.4 immediately above.
   6. When extra Work is performed by a lower tier Subcontractor, Contractor, first tier Subcontractors, and lower tier Subcontractors shall divide (as mutually agreed) a total of 5 percent markup on the lower tier Subcontractors' total costs of extra Work.
   7. Notwithstanding the foregoing, in no case shall the total markup on any extra Work exceed 20 percent of the direct cost, notwithstanding the actual number of Contract tiers.
   8. On proposals covering both increases and decreases in Contract Sum, markup for overhead and profit shall be included on the net amount as determined in this paragraph 1.4.
   9. The markup shall include profit, small tools, cleanup, engineering, supervision, warranties, cost of preparing the cost proposal, jobsite overhead, and home office overhead.

C. Taxes:
   1. All State sales tax, use tax, and Sonoma County and applicable City sales taxes shall be included.
   2. Federal and Excise tax shall not be included.

D. Owner-Operated Equipment: When owner-operated equipment is used to perform extra Work, Contractor will be paid as follows:
   1. Payment for cost of equipment will be made at no more than rates of such equipment established in paragraph 1.5C of this Section 01250.
   2. Payment for cost of labor will be made at no more than rates of such labor established by collective bargaining agreements for type of worker and location of Work, whether or not owner-operator is actually covered by such an agreement.
   3. Invoices for owner-operated equipment need not itemize labor and equipment costs, unless specifically requested by Owner. In any event, the total rate for owner-operated equipment shall not exceed the combined rates for labor and equipment listed in paragraphs 1.4D.1 and 1.4D.2 above.

E. Accord and Satisfaction: Every Change Order and accepted CCD shall constitute a full accord and satisfaction, and release, of all Contractor (and if applicable, Subcontractor) claims for additional time, money or other relief arising from or relating to the subject matter of the change including, without limitation, impacts of all types, cumulative impacts, inefficiency, overtime, delay, and any other type of claim. Contractor may elect to reserve its rights to disputed claims arising from or relating to the changed Work at the time it signs a Change Order or accepts a CCD, but must do so expressly in a writing delivered concurrently with the executed Change Order or approved CCD, and must also submit a

Claim for the reserved disputed items pursuant to Article 12 of Document 00700 (General Conditions) no later than 30 Days of Contractor's first written notice of its intent to reserve rights.

## 1.5 COST BREAKDOWN

A. Labor: Contractor will be paid cost of labor for workers (including forepersons when authorized by Owner) used in actual and direct performance of extra Work. Labor rate, whether employer is Contractor, Subcontractor or other forces, will be sum of following:
   1. Actual Wages: Actual wages paid shall include any employer payments to or on behalf of workers for health and welfare, pension, vacation, and similar purposes.
   2. Labor surcharge: Payments imposed by local, county, state, and federal laws and ordinances, and other payments made to, or on behalf of, workers, other than actual wages as defined in paragraph 1.5A.1 of this Section 01250, such as taxes and insurance. Labor surcharge shall be and shall not exceed that set forth in Caltrans official labor surcharges schedule which is in effect on date upon which extra Work is accomplished and which schedule is incorporated herein by reference as though fully set forth herein.

B. Material: Only materials furnished by Contractor and necessarily used in performance of extra Work will be paid for. Cost of such materials will be cost, including sales tax, to purchaser (Contractor, Subcontractor or other forces) from supplier thereof, except as the following are applicable:
   1. If cash or trade discount by actual supplier is offered or available to purchaser, it shall be credited to Owner notwithstanding fact that such discount may not have been taken.
   2. For materials salvaged upon completion of extra Work, salvage value of materials shall be deducted from cost, less discounts, of materials.
   3. If cost of a material is, in opinion of Owner, excessive, then cost of material shall be deemed to be lowest current wholesale price at which material is available in quantities concerned delivered to Site, less any discounts as provided in paragraph 1.5B.1 of this Section 01250.

C. Equipment: For Contractor- or Subcontractor-owned equipment, payment will be made at rental rates listed for equipment in Caltrans official equipment rental rate schedule which is in effect on date upon which extra Work is accomplished and which schedule is incorporated herein by reference as though fully set forth herein. If there is no applicable rate for an item of equipment, then payment shall be made for Contractor- or Subcontractor-owned equipment at rental rate listed in the most recent edition of the Association of Equipment Distributors (AED) book. For rented equipment, payment will be made based on actual rental invoices. Equipment used on extra Work shall be of proper size and type. If, however, equipment of unwarranted size or type and cost is used, cost of use of equipment shall be calculated at rental rate for equipment of proper size and type, as determined by Owner. Rates paid shall be deemed to cover cost of fuel, oil, lubrication, supplies, small tools, necessary attachments, repairs and maintenance of any kind, depreciation, storage, insurance, and all incidentals. Unless otherwise specified, manufacturer's ratings, and manufacturer-approved modifications, shall be used to classify equipment for determination of applicable rates. Individual pieces of equipment or tools not listed in said publication and having a replacement value of $100 or less, whether or not consumed by use, shall be considered to be small tools and no payment will be made therefor as payment is included in payment for labor. Payment will not be made for time in which equipment is inoperative due to breakdowns.

1. For Contractor or Subcontractor –owned equipment on Site, payment for equipment use will be for time equipment is in operation on extra Work being performed or on standby as approved by Owner.
2. For rented equipment on Site, the following shall be used in computing rental time of equipment:
   a. When hourly rates are listed, less than 30 minutes of operation shall be considered to be ½ hour of operation.
   b. When daily rates are listed, less than four hours of operation shall be considered to be ½ Day of operation.
3. For equipment that must be brought to Site to be used exclusively on extra Work, cost of transporting equipment to Site and its return to its original location shall be determined as follows:
   a. Owner will pay for costs of loading and unloading equipment.
   b. Cost of transporting equipment in low bed trailers shall not exceed hourly rates charged by established haulers.
   c. Cost of transporting equipment shall not exceed applicable minimum established rates of California Public Utilities Commission.
   d. Owner will not make any payment for transporting and loading and unloading equipment if equipment is used on Work in any other way than upon extra Work.
4. For rented equipment, rental period may begin at time equipment is unloaded at Site of extra Work and terminate at end of the performance of the extra Work or Day on which Owner directs Contractor to discontinue use of equipment, whichever first occurs. Excluding Saturdays, Sundays, and Owner's legal holidays, unless equipment is used to perform extra Work on such Days, rental time to be paid per Day shall be four hours for zero hours of operation, six hours for four hours of operation and eight hours for eight hours of operation, time being prorated between these parameters. Hours to be paid for equipment that is operated less than eight hours due to breakdowns, shall not exceed eight less number of hours equipment is inoperative due to breakdowns.

D. Work Performed by Special Forces or Other Special Services: When Owner and Contractor, by agreement, determine that special service or item of extra Work cannot be performed by forces of Contractor or those of any Subcontractors, service or extra Work item may be performed by specialist. Invoices for service or item of extra Work on basis of current market price thereof may be accepted without complete itemization of labor, material, and equipment rental costs when it is impracticable and not in accordance with established practice of special service industry to provide complete itemization. In those instances wherein Contractor is required to perform extra Work necessitating a fabrication or machining process in a fabrication or machine shop facility away from Site, charges for that portion of extra Work performed in such facility may, by agreement, be accepted as a specialist billing. Owner must be notified in advance of all off-Site Work. In lieu of overhead and profit provided in paragraph 1.4B of this Section 01250, 15 percent will be added to specialist invoice price, after deduction of any cash or trade discount offered or available, whether or not such discount may have been taken.

## 1.6 FORCE-ACCOUNT WORK

A. If it is impracticable because of nature of Work, or for any other reason, to fix an increase or decrease in price definitely in advance, the Contractor may be directed to proceed at a not-to-exceed (NTE) maximum price which shall not under any circumstances be exceeded. Subject to such limitation, such extra Work shall be paid for at actual necessary cost for

Force-Account Work or at the negotiated cost, as determined by Owner. The cost for Force-Account Work shall be determined pursuant to paragraphs 1.4 and 1.5 of this Section 01250.

B. Force-Account Work shall be used when it is not possible or practical to price out the changed Work prior to the start of that Work. In these cases, Force-Account Work will be utilized during the pricing and negotiation phase of the change. Once negotiations have been concluded and a bilateral agreement has been reached, the tracking of the Work under Force-Account is no longer necessary. Force-Account Work shall also be used when negotiations between Owner and Contractor have broken apart and a bilateral agreement on the value of the changed Work cannot be reached. Owner may approve other uses of Force-Account Work.

C. Whenever any Force-Account Work is in progress, definite price for which has not been agreed on in advance, Contractor shall report to Owner each Business Day in writing in detail amount and cost of labor and material used, and any other expense incurred in Force-Account Work on preceding Day, by using the Cost Proposal form attached hereto. No claim for compensation for Force-Account Work will be allowed unless report shall have been made.

D. Whenever Force-Account Work is in progress, definite price for which has not been agreed on in advance, Contractor shall report to Owner when 75 percent of the NTE amount has been expended.

E. Force-Account Work shall be paid as extra Work under this Section 01250. Methods of determining payment for Work and materials provided in this paragraph 1.6 shall not apply to performance of Work or furnishings of material that, in judgment of Owner, may properly be classified under items for which prices are otherwise established in Contract Documents.

## 1.7 OWNER-FURNISHED MATERIALS

A. Owner reserves right to furnish materials as it deems advisable, and Contractor shall have no claims for costs and overhead and profit on such materials.

## 1.8 OVERHEAD DEFINED FOR MODIFICATIONS

A. The following constitutes charges that are deemed included in overhead for all Contract Modifications, including Force-Account Work or CCD Work, whether incurred by Contractor, Subcontractors, or suppliers, and Contractor shall not invoice or receive payment for these costs separately:

1. Drawings: field drawings, Shop Drawings, as-builts, etc., including submissions of drawings
2. Routine field inspection of Work proposed
3. General superintendence
4. General administration and preparation of cost proposals, schedule analysis, Change Orders, and other supporting documentation as necessary
5. Computer services
6. Reproduction services
7. Salaries of project engineer, superintendent, timekeeper, storekeeper, and secretaries
8. Janitorial services
9. Temporary on-Site facilities:
   a. Offices
   b. Telephones
   c. Plumbing
   d. Electrical: Power, lighting

   e. Platforms
   f. Fencing, etc.
   g. Water
   h. Sanitation
10. Home office expenses
11. Insurance and Bond premiums
12. Procurement and use of vehicles and fuel used coincidentally in Work otherwise included in the Contract Documents
13. Surveying
14. Estimating
15. Protection of Work
16. Handling and disposal fees
17. Permit fees
18. Final cleanup
19. Other incidental Work

### 1.9 RECORDS AND CERTIFICATION

A. Force-Account (cost reimbursement) charges shall be recorded daily and summarized in Cost Proposal form attached hereto. Contractor or authorized representative shall complete and sign form each Day. Contractor shall also provide with the form: the names and classifications of workers and hours worked by each; an itemization of all materials used; a list by size, type, and identification number of equipment and hours operated; and an indication of all Work performed by specialists.

B. No payment for Force-Account Work shall be made until Contractor submits original invoices substantiating materials and specialists charges.

C. Owner shall have the right to audit all records in possession of Contractor relating to activities covered by Contractor's claims for Modification of Contract, including Force-Account Work and CCD Work.

D. Further, Owner will have right to audit, inspect, or copy all records maintained in connection with this Contract, including financial records and Escrow Bid Documents, in possession of Contractor relating to any transaction or activity occurring or arising out of, or by virtue of, the Contract. If Contractor is a joint venture, right of Owner shall apply collaterally to same extent to records of joint venture sponsor, and of each individual joint venture member. This right shall be specifically enforceable, and any failure of Contractor to voluntarily comply shall be deemed an irrevocable waiver and release of all claims then pending that were or could have been subject to the Article 12 of Document 00700 (General Conditions).

## PART 2 PRODUCTS – NOT USED

## PART 3 EXECUTION – NOT USED

END OF SECTION

COST PROPOSAL FORM FOLLOWS ON NEXT PAGE

**COST PROPOSAL (CP)**

**Sonoma Valley County Sanitation District, Sewer Trunk Replacement (Agua Caliente Creek Crossing)**
Contract Number 70-712-7 #7

**CP Number:** _____
**Date:** _____
**In Response To** _____
RFP #, etc.

**To: Sonoma Valley County Sanitation District**
Attention: Contract Administration/Inspection
c/o Sonoma County Water Agency
404 Aviation Boulevard, Santa Rosa, CA 95403-9019

Subject Ref. No: _____
(for Project Manager use only)

Phone: (707) 547-1913
Fax: (707) 544-6123

**From:** [Insert Contractor's Name/Address]
_____
_____

This Cost Proposal is in response to the above-referenced _____ [insert RFP, etc. as applicable].
Brief description of change(s): _____
_____

| ITEM DESCRIPTION | PRIME CONTR. | SUB 1 | SUB 2 | SUB 3 | SUB 4 | TOTAL |
|---|---|---|---|---|---|---|
| **MATERIAL** | | | | | | |
| **DIRECT LABOR COST** | | | | | | |
| **EQUIPMENT** | | | | | | |
| Other (Specify) | | | | | | |
| **Total Cost** | | | | | | |
| Subcontractor's Markup for Overhead and Profit 15 percent | | | | | | |
| Contractor's Markup for Overhead and Profit 15 percent (Labor and Materials) | | | | | | |
| Contractor's Markup for Overhead and Profit 10 percent (Equipment Rental) | | | | | | |
| Markup for Overhead and Profit to Contractor for Subcontractor's Work 5 percent | | | | | | |
| **GRAND TOTAL** | | | | | | |
| (percent of Total Cost above not including any Markup for Overhead and Profit) [Grand Total divided by Total Cost] | | | | | | |
| **REQUESTED CHANGE IN CONTRACT TIME (DAYS)** | | | | | | |

By Contractor: _____ Signature: _____ Date: _____

SECTION 01315

# PROJECT MEETINGS

## PART 1 GENERAL

### 1.1 SUMMARY

A. Section Includes:
   1. Descriptions of the required Project meetings for the Work. These meetings include:
      a. Post-Notice of Award Meeting
      b. Schedule Review Meetings
      c. Preconstruction Conference
      d. Monthly Progress Meetings
      e. Progress Payment Meetings
      f. Optional Submittal Review Meeting
      g. Special Meetings
      h. Safety Meetings

### 1.2 POST-NOTICE OF AWARD MEETING

A. Owner will call for and administer a Post-Notice of Award Meeting at time and place to be announced.
B. Contractor's general superintendent, Contractor's foreman, preparer of Safety Program, preparer of SWPPP, if applicable, and all major Subcontractors shall attend this meeting.
C. Agenda will include, but not be limited to, discussion of requirements for the following items:
   1. Insurance
   2. Bonds
   3. Notice to Proceed
   4. Commencement of Contract Time
   5. Start of Work at Site
   6. Contractor's Initial and Original Schedule
   7. Contractor's Schedule of Values
   8. Contractor's Schedule of Submittals
   9. Submittal and RFI procedures
   10. Safety Program
   11. SWPPP, if applicable
   12. Permits
   13. Name of Owner's Representative
   14. Other items as appropriate
D. Owner will distribute minutes of Post-Notice of Award Meeting to attendees. Attendees shall have 5 Days to submit comments or additions to minutes. Minutes will constitute final memorialization of results of Post-Notice of Award Meeting.

### 1.3 SCHEDULE REVIEW MEETINGS

A. Within 30 Days of issuance of Notice to Proceed, meet with Owner and conduct initial review of Contractor's draft Schedule of Submittals, draft Schedule of Values, and Initial Schedule.

B. Authorized representative in Contractor's organization, designated in writing, who will be responsible for working and coordinating with Owner relative to preparation and maintenance of Progress Schedule shall attend the initial schedule review meeting.
C. Contractor shall, within 30 Days from the commencement of Contract Time and prior to commencement of Work at the Site, meet with Owner to review the Original Progress Schedule and construction schedule submittals.
   1. Contractor shall have its manager, superintendent, scheduler, and key Subcontractor representatives, as required by Owner, in attendance. The meeting will take place over a continuous one-Day period.
   2. Owner's review will be limited to submittals' conformance to Contract Documents requirements including, but not limited to, coordination requirements. Owner's review may also include:
      a. Clarifications of Contract Requirements
      b. Directions to include activities and information missing from submittals
      c. Requests to Contractor to clarify its schedule
   3. Within 5 Days of the Schedule Review Meeting, Contractor shall respond in writing to all questions and comments expressed by Owner at the meeting.
D. Owner will administer Schedule Review Meetings and shall distribute minutes of Schedule Review Meetings to attendees. Attendees shall have 5 Days to submit comments or additions to minutes. Minutes will constitute final memorialization of results of Schedule Review Meetings.

## 1.4 PRECONSTRUCTION CONFERENCE

A. Owner will call for and administer Preconstruction Conference at time and place to be announced.
B. Contractor, all major Subcontractors, and major suppliers shall attend Preconstruction Conference.
C. Agenda will include, but not be limited to, the following items.
   1. Revised/updated schedules
   2. Personnel and vehicle permit procedures
   3. Use of premises
   4. Location of the Contractor's on-Site facilities
   5. Security
   6. Housekeeping
   7. Inspection and testing procedures, on-Site and off-Site
   8. Utility shutdown procedures
   9. Control and reference point survey procedures
   10. Safety Program
   11. Jurisdictional agency requirements
   12. Other items as appropriate
D. Owner will distribute copies of minutes to attendees. Attendees shall have 7 Days to submit comments or additions to minutes. Minutes will constitute final memorialization of results of Preconstruction Conference.

## 1.5 MONTHLY PROGRESS MEETINGS

A. Owner will schedule and administer monthly progress meetings throughout duration of Work. Progress meetings will be held monthly on approximately the 20th of each month.
   1. Meetings shall be held at Contractor's on-Site office unless otherwise directed by Owner.

2. An Owner Representative will prepare agenda and distribute it at the meeting to Contractor.
3. Contractor's general superintendent shall attend these meetings.
4. Owner will record. Approximately 7 Days after meeting, Owner will distribute minutes to Contractor, who will distribute to those affected by decisions made at meeting. Attendees can either submit comments or additions to minutes prior to the next progress meeting, or may attend the next progress meeting and submit comments or additions there. Minutes will constitute final memorialization of results of meeting.

B. These meetings are considered a critical component of overall monthly schedule update submittal and Contractor shall have appropriate personnel attend. Contractor's job superintendent, major Subcontractors and suppliers, Owner, and others as appropriate shall attend progress meetings.

C. Agenda will contain the following items, as appropriate:
1. Review, revise as necessary, and approve previous meeting minutes
2. Review of Work progress since last meeting, including percent complete of each activity
3. Review of the schedule update submittal
   a. Time impact evaluations for Change Orders and Time Extension Request
   b. Actual and anticipated activity sequence changes
   c. Actual and anticipated duration changes
   d. Actual and anticipated Contractor delays
4. Review the Application for Payment
5. Status of Construction Work Schedule, delivery schedules, adjustments
6. Submittal, RFI, and Change Order status
7. Review of the Contractor's safety program activities and results, including report on all serious injury and/or damage accidents
8. Other items affecting progress of Work

## 1.6 PROGRESS PAYMENT MEETINGS

A. Prior to official application for Payment submission, a meeting will be held on approximately the 20th of each month to review the Application for Payment.
1. At this meeting, the following items will be reviewed:
   a. Percent complete of each activity
   b. Project Schedule
   c. Hard-copy updates of the Project Record Drawings (Field Set)
2. Contractor's general superintendent shall attend these meetings.

## 1.7 OPTIONAL SUBMITTAL REVIEW MEETING

A. At Owner or Contractor's request, in order to facilitate the timeliness of the review process, Owner may schedule a meeting to review the materials submitted.
1. Request a meeting date with Owner at least 10 Business Days in advance.
2. Provide complete package of Submittals at least 10 Business Days in advance of the meeting.
3. The meeting shall take place at Owner's office. Owner will provide the authorized staff to review Submittals during the meeting.
4. Make available for this meeting the job superintendent and/or foreman, Contractor's safety officer, protective coating manufacturer's representative (if applicable), and someone knowledgeable of all Submittals and authorized to make substitutions or changes.

## 1.8 SPECIAL MEETINGS

A. Owner or Contractor may call special meetings by notifying all desired participants and Owner 5 Days in advance, giving reason for meeting. Special meetings may be held without advance notice in emergency situations.
B. At any time during the progress of Work, Owner shall have authority to require Contractor to attend meeting of any or all of the Subcontractors engaged in Work or in other work, and notice of such meeting shall be duly observed and complied with by Contractor.
C. Contractor shall schedule and conduct coordination meetings as necessary to discharge coordination responsibilities in Document 00700 (General Conditions). Contractor shall give Owner 5 Days written notice of coordination meetings. Contractor shall maintain minutes of coordination meetings. Attendees shall have 7 Days to submit comments or additions to minutes. Minutes will constitute final memorialization of results of coordination meetings.

## 1.9 SAFETY MEETINGS

A. Conduct monthly Contractor Safety Committee meetings.
B. Conduct weekly toolbox safety talks.

# PART 2 PRODUCTS – NOT USED

# PART 3 EXECUTION – NOT USED

END OF SECTION

SECTION 01320

# PROGRESS SCHEDULES AND REPORTS

## PART 1 GENERAL

### 1.1 SUMMARY

A. Perform scheduling of Work under this Contract in accordance with requirements of this Section 01320.
   1. Development of schedule, cost, and resource loading of the Progress Schedule, monthly payment requests, and Project status reporting requirements of the Contract Documents shall employ scheduling as required in this Section 01320.
   2. The Schedule shall be cost-loaded based on Schedule of Values as approved by Owner.
   3. Submit schedules and reports as specified in Document 00700 (General Conditions).

B. Upon Award of Contract, immediately commence development of Initial Schedule to ensure compliance with schedule submittal requirements.

C. Contractor's obligations under this Section 01320 are hereby deemed material obligations justifying Owner's remedies for default if Contractor fails to perform. Nothing in this paragraph 1.1.C of this Document 01320 or the lack of an express statement that any other Contract Documents provision is or is not material shall be considered in determining whether any such other provision is material.

D. Employ competent scheduling personnel or a schedule consultant with experience performing scheduling required herein on two prior, similar projects.

### 1.2 GENERAL

A. Progress Schedule shall be based on and incorporate Milestone and completion dates specified in Contract Documents.

B. Overall time of completion and time of completion for each Milestone shown on Progress Schedule shall adhere to times in Document 00520 (Agreement), unless an earlier (advanced) time of completion is requested by Contractor and agreed to by Owner. A Change Order shall formalize any such agreement.
   1. Owner is not required to accept an earlier (advanced) schedule, i.e., one that shows early completion date(s) for the Contract Time.
   2. Contractor is not entitled to extra compensation in event agreement is reached on an earlier (advanced) schedule and Contractor completes its Work, for whatever reason, beyond completion date shown in earlier (advanced) schedule but within the Contract Time.
   3. A schedule showing the Work completed in less than the Contract Time, which has been accepted by Owner, shall be considered to have Project Float. The Project Float is the time between the scheduled completion of the Work and Contract Substantial Completion. Project Float is a resource available to both Owner and Contractor.
   4. Project Float Ownership: Neither Owner nor Contractor owns Project Float. The Project owns the Project Float. As such, liability for delay of any Substantial Completion date rests with the party whose actions, last in time, actually cause delay to a Substantial Completion date.
      a. For example, in the event of unexcused delay by Party A and Party B, and if Party A uses some, but not all of the Project Float and Party B later uses remainder of the

Project Float as well as additional time beyond the Project Float, Party B shall be liable for the time that represents a delay to the Substantial Completion date.

b. Under this scenario, Party A would not be responsible for the time since it did not consume all of the Project Float and additional Project Float remained; therefore, the Substantial Completion Date was unaffected.

C. Progress Schedule shall be the basis for evaluating job progress, payment requests, and time extension requests. Responsibility for developing Contract schedule and monitoring actual progress as compared to Progress Schedule rests with Contractor.

D. Failure of Progress Schedule to include any element of the Work or any inaccuracy in Progress Schedule will not relieve Contractor from responsibility for accomplishing the Work in accordance with the Contract. Owner's acceptance of Schedule shall be for its use in monitoring and evaluating job progress, payment requests, and time extension requests, and shall not, in any manner, impose a duty of care upon Owner, or act to relieve Contractor of its responsibility for means and methods of construction.

E. Transmit each item using form approved by Owner or following Section 01330 (Submittal Procedures).

1. Identify Project with the Owner Contract number, and name of Contractor.
2. Provide space for Contractor's approval stamp and Owner's review stamps.
3. Submittals received from sources other than Contractor will be returned to Contractor without Owner's review.

## 1.3 INITIAL AND ORIGINAL PROGRESS SCHEDULE

A. Initial Schedule submitted within 21 Days after issuance of Notice to Proceed for review at the initial Schedule Review Meeting shall serve as Contractor's schedule for up to 30 Days after the commencement of Contract Time.

1. Initial Schedule must indicate detailed plan for the Work to be completed in first 30 Days after commencement of Contract Time of the Contract; details of planned mobilization of plant and equipment; sequence of early operations; and procurement of materials and equipment. Show Work beyond 30 Days in summary form.

B. Contractor shall submit its Original Schedule for review no later than first Application for Payment and prior to commencement of Work at the Site. Original Schedule and all updates shall comply with all standards herein.

C. All Schedules shall be time-scaled.

D. Except as otherwise expressly provided in this Section 01320, meet with Owner to review and discuss each Schedule (i.e., Initial, Original and updates) within seven Days after each Schedule has been submitted to Owner.

1. Owner's review and comment on any Schedule shall be limited to Contract conformance (with sequencing, coordination, and Milestone requirements).
2. Contractor shall make corrections to Schedule necessary to comply with Contract requirements and shall adjust Schedule to incorporate any missing information requested by Owner. Resubmit Initial Schedule if requested by Owner.

E. If Contractor is of the opinion that any of the Work included on its Schedule has been impacted, submit to Owner a written TIE in accordance with paragraph 1.8 of this Section 01320. The TIE shall be based on the most current update of the Schedule.

## 1.4 SCHEDULE FORMAT AND LEVEL OF DETAIL

A. Each Schedule (Initial, Original, and updates) shall indicate all separate submittals, fabrication, procurement and field construction activities required for completion of the Work, including but not limited to the following:

1. All Contractor, Subcontractor, and assigned Contractor Work shall be shown in a logical Work sequence that demonstrates a coordinated plan of Work for all contractors. The intent is to provide a common basis of acceptance, understanding, and communication, as well as interface with other contractors.
2. Incorporate Schedule of Submittals into each Schedule.
3. Activities related to the delivery of Contractor- and Owner-furnished equipment to be Contractor-installed per Contract shall be shown.
4. All activities shall be identified through codes or other identification to indicate the building (i.e. buildings, Site Work) and Contractor/Subcontractor responsibility to which they pertain.
5. Break up the Work schedule into activities of durations of approximately 21 Days or less each, except for non-field construction activities or as otherwise deemed acceptable by Owner.
6. Show the critical path in red. For each activity, show early start, late start, early finish, late finish, durations measured in Days, Project Float, resources, predecessor and successor activities, planned workday/week for the activity, manpower loading, and scheduled/actual progress payments.

B. Seasonal weather conditions (which do not constitute a delay as defined herein) shall be considered in the planning and scheduling of all Work influenced by high or low ambient temperatures or presence of high moisture for the completion of the Work within the allotted Contract Time.

C. Failure by Contractor to include any element of Work required for performance of the Work on the detailed construction schedule shall not excuse Contractor from completing all Work required within the Contract Time.

D. A two-week "look ahead," detailed daily bar chart schedule shall be updated and issued weekly.

E. Prepare schedule using Microsoft® Office Project 2007 software for all scheduling, including schedule updates.

## 1.5 MONTHLY SCHEDULE UPDATE SUBMITTALS

A. Following acceptance of Contractor's Initial Schedule, monitor progress of Work and adjust Schedule each month to reflect actual progress and any anticipated changes to planned activities.
   1. Each Schedule update submitted shall be complete, including all information requested for the Initial Schedule and Original Schedule submittal.
   2. Each update shall continue to show all Work activities including those already completed. Completed activities (shown in blue) shall accurately reflect "as built" information by indicating when activities were actually started and completed, and Contractor warrants the accuracy of as-built information as shown.

B. A meeting will be held in accordance with Section 01315 (Project Meetings) to review the Schedule update submittal. Submit Schedule updates monthly, 7 Days prior to the Monthly Progress Meeting.

C. Within five Days after monthly Schedule update meeting, submit the updated Schedule.

D. Within five Days of receipt of above-noted revised submittals, Owner will either accept or reject monthly schedule update submittal.
   1. If accepted, percent complete shown in monthly update will be basis for Application for Payment by Contractor. The schedule update shall be submitted as part of Contractor's Application for Payment.

2. If rejected, update shall be corrected and resubmitted by Contractor before the Application for Payment is submitted.

E. Updating, changing or revising of any report, curve, schedule or narrative submitted to Owner by Contractor under this Contract, nor Owner's review or acceptance of any such report, curve, schedule or narrative shall not have the effect of amending or modifying, in any way, the Contract Substantial Completion date or Milestone dates or of modifying or limiting, in any way, Contractor's obligations under this Contract.

## 1.6 SCHEDULE REVISIONS

A. Updating the Schedule (Initial and Original) to reflect actual progress shall not be considered revisions to the Schedule. Since scheduling is a dynamic process, however, revisions to activity durations and sequences are expected on a monthly basis.

B. To reflect revisions to the Schedule, provide Owner with a written narrative with a full description and reasons for each Work activity revised. For revisions affecting the sequence of Work, provide a schedule diagram that compares the original sequence to the revised sequence of Work. Provide the written narrative and schedule diagram for revisions three Days in advance of the monthly schedule update meeting. Clearly show and discuss any changes in the critical path.

C. Schedule revisions shall not be incorporated into any schedule update until Owner has reviewed the revisions. Owner may request further information and justification for schedule revisions and, within three Days, provide Owner with a complete written narrative response to Owner's request.

D. If Owner does not accept Contractor's revision, and Contractor disagrees with Owner's position, Contractor has seven Days from receipt of Owner's letter rejecting the revision, to provide a written narrative providing full justification and explanation for the revision. Contractor's failure to respond in writing within seven Days of Owner's written rejection of a schedule revision shall be contractually interpreted as acceptance of Owner's position, and Contractor waives its rights to subsequently dispute or file a claim regarding Owner's position. If Contractor files a timely response as provided in this paragraph, and the parties are still unable to agree, Contractor's sole right shall be to file a claim as provided in Document 00700 (General Conditions), Article 12.

E. At Owner's discretion, Contractor can be required to provide Subcontractor certifications of performance regarding proposed schedule revisions affecting said Subcontractors.

## 1.7 RECOVERY SCHEDULE

A. If a Schedule update shows a Substantial Completion date 21 Days beyond any Contract Substantial Completion date, or individual Milestone completion dates, submit to Owner within seven Days the proposed revisions to recover the lost time. As part of this submittal, provide a written narrative for each revision made to recapture the lost time. If the revisions include sequence changes, provide a schedule diagram comparing the original sequence to the revised sequence of Work. If Owner reasonably requests, show the intended critical path; secure appropriate Subcontractor and supplier consent to the recovery Schedule; submit a narrative explaining trade flow and construction flow changes, duration changes, added/deleted activities, critical path changes and identify all near critical paths and man-hour loading assumptions for major Subcontractors.

B. The revisions shall not be incorporated into any Schedule update until Owner has reviewed the revisions.

C. If Owner does not accept Contractor's revisions, Owner and Contractor shall follow the procedures in paragraphs 1.6C, 1.6D, and 1.6E of this Section 01320.

D. At Owner's discretion, Contractor can be required to provide Subcontractor certifications for revisions affecting said Subcontractors.

## 1.8 TIME IMPACT EVALUATION (TIE) FOR CHANGE ORDERS AND OTHER DELAYS

A. When Contractor is directed to proceed with changed Work, prepare and submit, within 14 Days from the direction to proceed, a TIE that includes both a written narrative and a schedule diagram depicting how the changed Work affects other schedule activities. The schedule diagram shall show how Contractor proposes to incorporate the changed Work in the schedule, and how it impacts the current Schedule update critical path or otherwise. Contractor is also responsible for requesting time extensions based on the TIE's impact on the critical path. The diagram shall be tied to the main sequence of scheduled activities to enable Owner to evaluate the impact of changed Work to the scheduled critical path.
B. Comply with the requirements of paragraph 1.8A of this Section 01320 for all types of delays such as, but not limited to, Contractor/Subcontractor delays, adverse weather delays, strikes, procurement delays, fabrication delays, etc.
C. Contractor is responsible for all costs associated with the preparation of TIEs, and the process of incorporating TIEs into the current schedule update.
D. Once agreement has been reached on a TIE, the Contract Time will be adjusted accordingly. If agreement is not reached on a TIE, the Contract Time may be extended in an amount Owner allows, and Contractor may submit a claim for additional time claimed by Contractor as provided in Document 00700 (General Conditions).

## 1.9 TIME EXTENSIONS

A. Contractor is responsible for requesting time extensions for time impacts that, in the opinion of Contractor, impact the critical path of the current schedule update. Notice of time impacts shall be given in accordance with Document 00700 (General Conditions).
B. Where an event for which Owner is responsible impacts the projected Substantial Completion date, provide a written mitigation plan, including a schedule diagram, which explains how (e.g., increase crew size, overtime, etc.) the impact can be mitigated. Also include a detailed cost breakdown of the labor, equipment, and material Contractor would expend to mitigate Owner-caused time impact. Submit mitigation plan to Owner within 14 Days from the date of discovery of said impact. Contractor is responsible for the cost to prepare the mitigation plan.
C. Failure to request time, provide TIE, or provide the required mitigation plan will result in Contractor waiving its right to a time extension and cost to mitigate the delay.
D. No time will be granted under the Contract Documents for cumulative effect of changes.
E. Owner will not be obligated to consider any time extension request unless requirements of Contract Documents are complied with.
F. Failure of Contractor to perform in accordance with the current schedule update shall not be excused by submittal of time extension requests.
G. Notwithstanding any other provision of this Section 01320, if Contractor does not submit a TIE within the required 14 Days for any issue, Contractor hereby agrees that Contractor does not require a time extension for that issue.

## 1.10 PROJECT STATUS REPORTING

A. In addition to submittal requirements for scheduling identified in this Section 01320, provide a monthly Project status report (i.e., written narrative report) to be submitted in conjunction with each Schedule as specified herein. Status reporting shall be in form specified in this paragraph 1.10 below.

B. Prepare monthly written narrative reports of status of Project for submission to Owner. Written status reports shall include:
   1. Status of major Project components (percent complete, amount of time ahead or behind schedule) and an explanation of how Project will be brought back on schedule if delays have occurred.
   2. Progress made on critical activities indicated on each Schedule, including inspections.
   3. Explanations for any lack of Work on critical path activities planned to be performed during last month.
   4. Explanations for any schedule changes, including changes to logic or to activity durations.
   5. List of critical activities scheduled to be performed during the next month.
   6. Status of major material and equipment procurement.
   7. Any delays encountered during reporting period.
   8. Description or list of any required permit reports prepared or submitted.
   9. Provide printed report indicating actual versus planned resource loading for each trade and each activity. This report shall be provided on weekly and monthly basis.
      a. Actual resource shall be accumulated in field by Contractor, and shall be as noted on Contractor's daily reports. These reports will be basis for information provided in monthly and weekly printed reports.
      b. Explain all variances and mitigation measures.
   10. Contractor may include any other information pertinent to status of Project. Include additional status information requested by Owner at no additional cost.
   11. Status reports, and the information contained therein, shall not be construed as claims, notice of claims, notice of delay, or requests for changes or compensation.

## PART 2 PRODUCTS – NOT USED

## PART 3 EXECUTION – NOT USED

END OF SECTION

SECTION 01330

# SUBMITTAL PROCEDURES

## PART 1 GENERAL

### 1.1 SUMMARY

A. Section Includes:
   1. Description of general requirements for Submittals for the Work, as applicable:
      a. Procedures
      b. Schedule of Submittals
      c. Construction Material Waste Management Plan
      d. Safety Program
      e. Progress Schedule
      f. Product Data
      g. Shop Drawings
      h. Samples
      i. Coordination Drawings (If Applicable)
      j. Quality Assurance/Control Submittals
         1) Design Data
         2) Test Reports
         3) Certificates
         4) Manufacturers' Instructions
         5) Work Plans
      k. Installation, Operation, and Maintenance Manual
      l. Project Record Documents
      m. Storm Water Pollution Prevention Program
      n. Delay of Submittals

### 1.2 PROCEDURES

A. Submit at Contractor's expense the Submittals required by the Contract Documents.
B. Submit Submittals to Owner in accordance with accepted Schedule of Submittals. If no such schedule is agreed upon, then all Submittals shall be submitted within 35 Days from the commencement of Contract Time.
C. Transmit each item with the appropriate Submittal transmittal form (included at the end of this Section 01330). Where manufacturer's standard drawings or data sheets are used, they shall be marked clearly to show those portions of the data that are applicable to this Project. Inapplicable portions shall be marked out. Organize Submittals by Specification Section. Submittals containing information about more than one Specification Section will be returned for resubmittal. Submittals shall include all information requested by each Specification Section. Incomplete Submittals will be returned not reviewed by Owner.
D. The data shown on the Submittals shall be complete with respect to quantities, dimensions, specified performance and design criteria, materials, and similar data to show Owner the materials and equipment Contractor proposes to provide and to enable Owner to review the information for the limited purposes specified in this Section 01330. Submittals shall be identified clearly as to material, supplier, pertinent data such as catalog numbers and the

use for which it is intended and otherwise as Owner may require to enable Owner to review the Submittal.

E. At the time of each submission, give Owner specific written notice of all variations, if any, that the Submittal may have from the requirements of the Contract Documents, and the reasons therefore. This written notice shall be in a written communication attached to the Submittal transmittal form. In addition, cause a specific notation to be made on each Submittal submitted to Owner for review and approval of each such variation. If Owner accepts deviation, Owner will note its acceptance on the returned Submittal transmittal form and, if necessary, issue appropriate Contract Modification.

F. Submittal coordination and verification is the responsibility of Contractor; this responsibility shall not be delegated in whole or in part to Subcontractors or suppliers. Before submitting each Submittal, review and coordinate each Submittal with other Submittals and with the requirements of the Work and the Contract Documents, and determine and verify:
   1. All field measurements, quantities, dimensions, specified performance criteria, installation requirements, materials, catalog numbers, and similar information with respect thereto;
   2. All materials with respect to intended use, fabrication, shipping, handling, storage, assembly, and installation pertaining to the performance of the Work; and
   3. All information relative to Contractor's sole responsibility for means, methods, techniques, sequences, and procedures of construction and safety precautions and programs incident thereto.

G. Contractor's submission to Owner of a Submittal shall constitute Contractor's representation that it has satisfied its obligations under the Contract Documents, and as set forth immediately above in this paragraph 1.2 of this Section 01330, with respect to Contractor's review and approval of that Submittal.

H. Designation of Work "by others," if shown in Submittals, shall mean that Work will be responsibility of Contractor rather than Subcontractor or supplier who has prepared Submittals.

I. After review by Owner of each Submittal, an electronic copy of each Submittal will be returned to Contractor with actions defined as follows:
   1. NO EXCEPTIONS TAKEN - Accepted subject to its compatibility with future Submittals and additional partial Submittals for portions of the Work not covered in this Submittal. Does not constitute approval or deletion of specified or required items not shown on the Submittal.
   2. MAKE CORRECTIONS NOTED (NO RESUBMISSIONS REQUIRED) - Same as item 1 above, except that minor corrections as noted shall be made by Contractor.
   3. REVISE AS NOTED AND RESUBMIT - Rejected because of major inconsistencies or errors that shall be resolved or corrected by Contractor prior to subsequent review by Owner.
   4. REJECTED - RESUBMIT - Submitted material does not conform to Drawings and/or Specifications in major respect, i.e.: wrong size, model, capacity, or material.

J. Make a complete and acceptable Submittal at least by second submission. Owner reserves the right to deduct monies from payments due Contractor to cover additional costs of review beyond the second submission per paragraph 1.2T. Illegible Submittals will be rejected and returned to Contractor for resubmission. Contractor shall be in breach of the Contract if Contractor's first resubmittal, following a Submittal which Owner determines falls within categories 3 or 4 above, does not fall within categories 1 or 2 above.

K. Favorable review will not constitute acceptance by Owner of any responsibility for the accuracy, coordination, or completeness of the Submittals. Accuracy, coordination, and completeness of Submittals shall be sole responsibility of Contractor, including responsibility to back-check comments, corrections, and modifications from Owner's review before fabrication. Contractor, Subcontractors, or suppliers may prepare Submittals, but Contractor shall ascertain that Submittals meet requirements of Contract Documents, while conforming to structural space and access conditions at point of installation. Owner's review will be only to assess if the items covered by the Submittals will, after installation or incorporation in the Work, conform to the information given in the Contract Documents and be compatible with the design concept of the completed Project as indicated by the Contract Documents. Favorable review of Submittal, method of Work, or information regarding materials and equipment Contractor proposes to furnish shall not relieve Contractor of responsibility for errors therein and shall not be regarded as assumption of risks or liability by Owner, or any officer or employee thereof, and Contractor shall have no claim under Contract Documents on account of failure or partial failure or inefficiency or insufficiency of any plan or method of Work or material and equipment so accepted. Favorable review shall be considered to mean merely that Owner has no objection to Contractor using, upon Contractor's own full responsibility, plan or method of Work proposed, or furnishing materials and equipment proposed.

L. Unless otherwise specified, Owner's review will not extend to the means, methods, techniques, sequences, or procedures of construction or to safety precautions or programs incident thereto. The review and approval of a separate item as such will not indicate approval of the assembly in which the item functions.

M. Submit complete initial Submittal for those items where required by individual Specification Sections. Complete Submittal shall contain sufficient data to demonstrate that items comply with Specifications, shall meet minimum requirements for submissions cited in Specification Sections, shall include motor data and seismic anchorage certifications, where required, and shall include necessary revisions required for equipment other than first named. If Contractor submits incomplete initial Submittal when complete Submittal is required, Submittal may be returned to Contractor without review.

N. Copy, conform, and distribute reviewed Submittals in sufficient numbers for Contractor's files, Subcontractors, and vendors.

O. After Owner's review of Submittal, revise as noted and resubmit as required. Identify changes made since previous Submittal.
   1. Begin no fabrication or Work that requires Submittals until return of Submittals not requiring resubmittal. Do not extrapolate from Submittals covering similar Work.
   2. Normally, Submittals will be processed and returned to Contractor within 40 Days of receipt.

P. Distribute reviewed Submittals to concerned persons. Instruct recipients to promptly report any inability to comply with provisions.

Q. All Submittals shall be number-identified by Contractor, prior to submission to Owner, in accordance with Owner's numbering format. Owner will provide Contractor with sample numbering format.

R. Submission Requirements:
   1. Deliver Submittals to Owner at least 30 Days before dates reviewed Submittals will be needed.

2. Initial Submittal of Installation, Operation, and Maintenance Manual shall be:
   a. 45 Days after the date Submittal(s) that pertain to the item are favorably reviewed; and
   b. Prior to start-up and testing of the applicable product or equipment.
3. The following table lists the number of initial Submittals required from Contractor for each type of submission and to whom Contractor shall distribute the information. Submittals requiring resubmission will require the same quantity and distribution as an initial Submittal.

| **Submittal** | **Contractor Submittal** | |
|---|---|---|
| | # of hard copies/ Prints/ Samples | Electronic copy |
| Items Go To → | Owner | Owner |
| Schedule of Submittals | 0 | ✓ |
| Construction Material Waste Management Plan | 0 | ✓ |
| Monthly Progress Reports for Construction Material Waste Management Plan | 0 | ✓ |
| Safety Program | 1 | ✓ |
| Fire Protection Plan | 1 | ✓ |
| Progress Schedule | 1 | ✓ |
| Product Data | 0 | ✓ |
| MSDSs | 0 | ✓ |
| Shop Drawings | 0 | ✓ |
| Drawings or any documents larger than 11″ x 17″ | 0 | ✓ |
| Samples | 2 | - |
| Coordination Drawings | 0 | ✓ |
| Quality Assurance/Control Submittals: | | |
| Design Data | 0 | ✓ |
| Test Reports | 0 | ✓ |
| Certificates | 0 | ✓ |
| Manufacturers' Instructions | 0 | ✓ |
| Work Plans | 0 | ✓ |
| Installation, Operation, and Maintenance Manuals (initial submittal) | 0 | ✓ |
| Installation, Operation, and Maintenance Manuals (final submittal) | 4 | ✓ |
| Major Products List | 0 | ✓ |
| Storm Water Pollution Prevention Program | 0 | ✓ |
| Other Documents | 0 | ✓ |

4. The following table lists the Submittals required from Contractor after Owner's favorable review, if Submittal requires a stamp or signature.

| **Submittal** | **Contractor Submittal** |
|---|---|
| | # of hard copies |
| Items Go To → | Owner |
| Shop Drawings | 1 |
| Coordination Drawings | 1 |
| Quality Assurance/Control Submittals: | |
| Design Data | 1 |
| Test Reports | 1 |
| Certificates | 1 |
| Work Plans | 1 |
| Storm Water Pollution Prevention Program | 1 |
| Other Documents | 1 |

5. Accompany each copy of the Submittal(s) with a Submittal transmittal form, containing:
   a. Date, revision date, and Submittal identification number.
   b. Project name and Owner's Contract number.
   c. Contractor's name, address, and job number.
   d. Specification Section number clearly identified.
   e. The quantity of Shop Drawings, Product Data, or Samples submitted.
   f. Notification of deviations from Contract Documents.
   g. MSDS for each item complying with OSHA's Hazard Communication Standard 29 CFR 1910.1200.
   h. Other pertinent data.
6. Submittal shall include:
   a. Date and revision dates.
   b. Revisions, if any, identified.
   c. Project Name and Contract number.
   d. The names of:
      1) Contractor, Subcontractor, Supplier, Manufacturer, and separate detailer, when pertinent.
   e. Identification of product material by location within the Project.
   f. Relation to adjacent structure or materials.
   g. Field dimensions, clearly identified as such.
   h. Specification Section number and applicable detail reference number and Drawing number.
   i. Applicable reference standards, such as ASTM, ANSI, FS, NEMA, SMACNA or ACI.
   j. A blank space, on the first sheet of each Submittal set, 5" x 4" for the Owner's stamp.
   k. Identification of deviations from Contract Documents.

S. Resubmission requirements:
1. Shop Drawings:
   a. Revise initial Shop Drawings as required and resubmit as specified for initial Submittals.
   b. Indicate on Shop Drawings any changes that have been made other than those requested by Owner.

2. Product Data and Samples:
   a. Submit new Product Data and Samples as required for initial Submittals.
3. Installation, Operation, and Maintenance Manual:
   a. Revise initial Installation, Operation, and Maintenance Manual(s) as required and resubmit as specified for initial Submittals.

T. Charge for resubmissions:
1. One re-examination of Contractor's Submittals that have been returned for correction or replacement will be included in Owner's budget. Any additional re-examination of Contractor's Submittals will be considered additional scope services to be paid by Contractor through Owner. Contractor shall pay Owner (or Owner may deduct from any progress or final payment), for engineering personnel, on an hourly basis at 2.5 times direct payroll expenses, and for consultant personnel time at 1.25 times the amount billed Owner.

## 1.3 SCHEDULE OF SUBMITTALS

A. Submit a preliminary Schedule of Submittals as required herein and by Document 00700 (General Conditions). Utilize Owner's Submittal Log form to prepare Schedule of Submittals. Owner's Submittal Log form will be provided to Contractor in electronic media format compatible with Microsoft® Excel 2000.
B. Schedule of Submittals will be used by Owner to schedule its activities relating to review of Submittals. Schedule of Submittals shall indicate a spreading out of Submittals and early Submittals of long-lead-time items and of items that require extensive review.
C. Schedule of Submittals will be reviewed by Owner and shall be revised and resubmitted until accepted by Owner.
D. Unless otherwise specified, transmit Submittals for associated items simultaneously to ensure that information is available for checking each item when it is received. Identify on the Submittal transmittal form that such Submittals should be reviewed together.

## 1.4 CONSTRUCTION MATERIAL WASTE MANAGEMENT PLAN

A. Submit Construction Material Waste Management Plan specific to these Contract Documents as required by Section 01741 (Construction Material Waste Management Plan).

## 1.5 SAFETY PROGRAM

A. Submit Safety Program specific to these Contract Documents as required by Section 01540 (Site Security and Safety).

## 1.6 PROGRESS SCHEDULE

A. See Section 01320 (Progress Schedules and Reports) for schedule and report requirements. Section 01320 (Progress Schedules and Reports) shall control in any conflict with this Section 01330.
B. Progress schedules, schedule updates, and reports shall be submitted using software described Section 01320 (Progress Schedules and Reports). Electronic files shall be complete copies, including all programs and electronic coding.

## 1.7 PRODUCT DATA

A. Within ten Days after Contract Time commences to run, submit complete list of major products proposed for use (included at the end of this Section 01330, if required), with name of manufacturer, telephone number, trade name, and model number of each product. Tabulate data by Specification Section.

B. Product or Catalog Data:
   1. Manufacturers' standard drawings shall be modified to delete non-applicable data or include applicable data.
   2. Manufacturers' catalog sheets, brochures, diagrams, schedules, charts, illustrations, and other standard descriptive data:
      a. Mark each copy to identify pertinent materials, products, or models.
      b. Show dimensions and clearances required, performance characteristics and capacities, wiring diagrams and controls.
   3. For products specified only by reference standards, give manufacturer, trade name, model or catalog designation, and reference standards.
   4. Material Safety Data Sheets:
      a. In addition to MSDSs otherwise required by the Contract Documents, submit MSDSs for any products containing a hazardous substance such as paints, solvents, thinners, varnish, lacquer, glues and adhesives, mastics, sealants, equipment fuel, equipment lubricant, or other materials needed for the Project as required by the individual Specification Sections or as otherwise specified in the Contract Documents.
      b. MSDSs must be submitted with Product Data Submittal in order for the Submittal to be reviewed.
C. Supplemental Data:
   1. Mark each copy to identify applicable products, models, options, and other data. Supplement manufacturer's standard data to provide information unique to Project.

## 1.8 SHOP DRAWINGS

A. Minimum Sheet Size: 8½ inches by 11 inches. All others: Multiples of 8½ inches by 11 inches, 34 inches by 44 inches maximum.
B. The electronic copy will be marked with Owner's review comments and returned to Contractor.
C. Mark each copy to identify applicable products, models, options, and other data; supplement manufacturers' standard data to provide information unique to Work.
D. Include manufacturers' installation instructions when required by Specification Section.
E. If Contractor submits Shop Drawings for items that Shop Drawings are not specified, Owner will not be obliged to review them.
F. Contractor is responsible for procuring copies of Shop Drawings for its own use as it may require for the progress of the Work.
G. Shop Drawings shall be drawn to scale and completely dimensioned, showing plan view together with such sectional views as are necessary to clearly show construction detail, materials, and methods.

## 1.9 SAMPLES

A. Submit full range of manufacturers' standard colors, textures, and patterns for Owner's selection.
B. Submit Samples to illustrate functional and aesthetic characteristics of product, with integral parts and attachment devices. Coordinate Submittal of different categories for interfacing Work.
C. Include identification on each Sample, giving full information.
D. Sizes: Unless otherwise specified, provide the following:
   1. Paint Chips: Manufacturers' standard
   2. Flat or Sheet Products: Minimum 6 inches square, maximum 12 inches square
   3. Linear Products: Minimum 6 inches, maximum 12 inches long

4. Bulk Products: Minimum 1 pint, maximum 1 gallon

E. Full size Samples may be used in Work upon approval by Owner.

F. Field Samples and Mock-ups (if applicable):
   1. Erect field Samples and mock-ups at Site in accordance with requirements of Specification Sections. If testing is conducted, record and certify results and full Contract compliance.
   2. Modify or make additional field Samples and mock-ups as required to provide appearance and finishes approved by Owner.
   3. Approved field Samples and mock-ups may be used in Work upon approval by Owner.
   4. Construct or prepare as many additional Samples as may be required, as directed by the Owner, until desired textures, finishes, and/or colors are obtained.
   5. Accepted Samples and mock-up shall serve as the standard of quality for the various units of Work.

G. No review of a Sample shall be taken in itself to change or modify the requirements in the Contract Documents.

H. Finishes, materials, and workmanship in the completed Work shall match accepted Samples.

I. Samples will not be returned to Contractor.

## 1.10 COORDINATION DRAWINGS (IF APPLICABLE)

A. Layout Drawings: As soon as practical and in no case starting later than 30 Days after issuance of Notice to Proceed, Contractor shall prepare layout drawings of all equipment and piping at not less than ¼" scale. The layout drawings shall show the location of all equipment as well as locations of all valves, piping, fittings, and other items requiring access for service and maintenance. The layout drawings shall also show beams, ceiling heights, walls, floor-to-floor dimensions, columns, doors and other major architectural and structural drawings.
   1. At Contractor's option, the layout drawings may be produced using computer-aided drafting.

B. Coordination with Subcontractors: Within 30 Days after the date of the Notice to Proceed, send one reproducible and two prints of the layout drawings to Subcontractors who shall then make on the reproducible their own routings, etc., as required to determine interrelationship and possible interferences with mechanical equipment, piping and architectural or structural features. The marked-up reproducibles shall then be returned to Contractor no less than 30 Days after receipt by the Subcontractors.

C. Composite Drawings: Contractor shall prepare preliminary composite drawings of such layout drawings, incorporating all the information and routings provided by the Subcontractors. (At Contractor's option, a group of transparent overlays may be substituted, provided that they clearly show the relationship of all proposed installations and they are pin-registered/aligned.)
   1. The preliminary composite drawings or the overlays shall be reviewed during a series of meetings called by Contractor and attended by Owner, at which all Subcontractors and trades shall be represented in order to review and resolve any real or apparent interferences or conflicts.

D. Agreement by Subcontractors: After all conflicts or interferences are resolved, Contractor shall develop a final set of composite drawings showing the agreed-upon routing, layout and juxtaposition of all , piping, major conduit, valves, panels, controls, lighting fixtures and all major mechanical and electrical installations. In areas where no mechanical and electrical

installations are installed, each Subcontractor shall be responsible for its own Work and pay its own costs in connection therewith. In preparation of all the final composite drawings, large scale details as well as cross and longitudinal sections shall be prepared as required to fully delineate all conditions. Particular attention shall be given to the locations, size, and clearance dimensions of equipment items, shafts, and similar features. These final composite drawings shall then be signed off by Subcontractors and Contractor, indicating their awareness of and agreement with the indicated routings and layouts and their interrelationship with the adjoining or contiguous Work. Thereafter, no unauthorized deviations will be permitted and, if made without knowledge or agreement of Owner, such unauthorized Work will be subject to removal and correction at no additional cost to Owner.

E. Minor Changes: In preparing the composite drawings, minor changes in duct, pipe or conduit routings that do not affect the intended function may be made as required to avoid space conflicts, when mutually agreed, but items may not be resized or exposed items relocated without Owner's written approval. No changes shall be made in any wall or chase locations, ceiling heights, door swings or locations, window or other openings or other features affecting the function or aesthetic effect of the building. If conflicts or interferences cannot be satisfactorily resolved, Owner shall be notified and Owner's decision obtained.

F. Distribution of Composite Drawings: After the final composite drawings have been agreed upon and signed by all Subcontractors, provide and distribute four prints and one electronic copy to each of the Subcontractors for reference and record purposes. Make similar distribution of all supplementary composite drawings, initiated by other Subcontractors. Also provide final composite drawings to Owner. All Subcontractors desiring additional prints of such drawings, beyond the basic distribution indicated above in this paragraph 1.10F, shall arrange for and pay the cost of same.

G. Record Composite Drawings: The record copies of the final composite drawings shall be retained by Owner, Contractor, and each Subcontractor as a working reference. All Shop Drawings, prior to their Submittal to Owner, shall be compared with the composite drawings and developed accordingly by Contractor and the responsible Subcontractor. Any revisions to the composite drawings that may become necessary during the progress of the Work shall be noted by Contractor and all Subcontractors and shall be neatly and accurately recorded on the record copies. Contractor and each Subcontractor shall be responsible for the up-to-date maintenance of Subcontractor record copies of the composite drawings and for keeping two copies available at the Site. Contractor and each Subcontractor shall utilize the composite drawings, and any subsequent changes thereto, in the development of Subcontractor "Project Record Documents" drawings.

H. Timely Submission: The composite drawings need not be submitted as a whole, but shall be submitted in all cases in ample time to avoid construction delay. The coordination drawings may lack complete data in certain instances pending receipt of Shop Drawings, but sufficient space shall be allotted for the items affected. When final information is received, such data shall be promptly inserted on the composite drawings.

I. Improperly Coordinated Work: No extra compensation will be paid for relocating any duct, pipe, conduit, or other material that has been installed without proper coordination between Contractor and all Subcontractors involved. If any improperly coordinated Work or Work installed that is not in accordance with the approved composite drawings, necessitates additional Work by Contractor or other Subcontractors, the costs of all such Work shall be borne solely by Contractor or the Subcontractor responsible for the Work.

J. Incorporation of Changes: All changes in the scope of Work due to revisions formally issued and approved shall be shown on the composite drawings.
K. Quality Draftsmanship: All Work on Shop Drawings, layout drawings, coordination drawings, and composite drawings shall be performed by competent drafters and shall be clear and fully legible. Owner shall be the sole judge of the acceptability of the drawings.
L. Structural Cutting: Obtain specific positive written instructions from Owner before cutting beams or other structural members, walls, arches, or lintel, and comply with such instructions.

## 1.11 QUALITY ASSURANCE/CONTROL SUBMITTALS

A. Design Data:
   1. Indicate that material or product conforms to or exceeds specified requirements.
B. Test Reports:
   1. Indicate that material or product conforms to or exceeds specified requirements.
   2. Reports may be from recent or previous tests on material or product, but shall be acceptable to Owner. Comply with requirements of each individual Specification Section.
C. Certificates:
   1. Indicate that material or product conforms to or exceeds specified requirements.
   2. Submit supporting reference data, affidavits, and certifications as appropriate.
   3. Certificates may be recent or from previous test results on material or product, but shall be acceptable to Owner.
D. Manufacturers' Instructions:
   1. Include manufacturers' printed instructions for delivery, storage, assembly, installation, startup, adjusting, and finishing.
   2. Identify conflicts between manufacturers' instructions and Contract Documents.
E. Work Plans:
   1. Submit work plans with sufficient detail to clearly indicate compliance with Specification requirements and to clearly describe by what means and methods Contractor intends to execute the subject Work.

## 1.12 INSTALLATION, OPERATION, AND MAINTENANCE MANUAL (IF APPLICABLE)

A. Sheet Size: 8½ x 11 inch
B. Drawing Size: Reduce drawings or diagrams to an 8½ x 11 inch or 11 x 17 inch size. However, where reduction is not practical to ensure readability, fold larger drawings separately and place in vinyl envelopes bound into the binder. Identify vinyl envelopes with drawing numbers.
C. Binding: Bind in heavy-duty white vinyl D-ring binders (locking rings), not more than 3" thick, with standard three-hole punch, two inside pockets, and a clear overlay (front pocket). Binder shall be no more than 80% full.
D. Multiple Items: Multiple items may be combined into one binder; tab each section with plastic-coated dividers.
E. Volumes: create volumes, numbered sequentially, as appropriate.
F. Page Protectors: Provide plastic sheet lifters prior to first page and following last page.
G. Binder title: Include the following title on front and spine of binder(s):

SONOMA VALLEY COUNTY SANITATION DISTRICT
SEWER TRUNK REPLACEMENT (AGUA CALIENTE CREEK CROSSING)
INSTALLATION, OPERATION, AND MAINTENANCE MANUAL, [YEAR]
VOLUME [__(number) of __(total number of volumes)]

H. Contents:
   1. Introductory Information:
      a. Title page providing the same information as paragraph 1.12G above
      b. Contractor's name, address, and telephone number
      c. Table of Contents: include a complete table of contents in each volume, if applicable
   2. Include, at a minimum, the following detailed information for each item as applicable and as required by individual Specification Sections:
      a. Bill of materials: include manufacturer, complete model number, quantity, and equipment location.
      b. Operational information:
         1) Equipment function, normal operating characteristics, limiting operations.
         2) Operating instructions for startup, routine and normal operation, regulation and control, shutdown, and emergency conditions.
         3) A list of recommended spare parts with a price list, predicted life of parts subject to wear, and a list of spare parts provided under this Contract.
         4) Instrumentation or tag numbers relating the equipment back to the Contract Documents.
      c. Maintenance information:
         1) Assembly, disassembly, installation, alignment, adjustment, and checking instructions.
         2) Lubrication and maintenance instructions including specific type and amount of lubricant and recommended lubrication interval.
         3) Outline, cross-section, and assembly drawings; engineering data; and electrical diagrams, including elementary diagrams, labeled wiring diagrams, connection diagrams, word description of wiring diagrams and interconnection diagrams.
         4) Test data and performance curves.
         5) Parts lists or other documents packed with equipment when delivered.
         6) Instrumentation or tag numbers relating the equipment back to the Contract Documents.
      d. Troubleshooting guide.
      e. Delete information that is not pertinent to the Project.
   3. Index: alphabetical by keyword

I. Final Submittal: Upon favorable review of Installation, Operation, and Maintenance Manual(s) by Owner, deliver the final approved Installation, Operation, and Maintenance Manual(s). Electronic media format copy shall be searchable and include all tables, charts, drawings, codes and all other matters reflected in hard copies.

## 1.13 PROJECT RECORD DOCUMENTS

A. Submit Project Record Documents as required by Section 01780 (Project Record Documents).

## 1.14 STORM WATER POLLUTION PREVENTION PROGRAM (IF APPLICABLE)

A. Submit Storm Water Pollution Prevention Program if required by Section 01500 (Temporary Facilities and Controls).

## 1.15 DELAY OF SUBMITTALS

A. Delay of Submittals by Contractor is considered avoidable delay. Liquidated damages incurred because of late Submittals will be assessed to Contractor.

## PART 2 PRODUCTS – NOT USED

## PART 3 EXECUTION – NOT USED

END OF SECTION

MAJOR PRODUCTS LIST AND TRANSMITTAL FORMS FOLLOW THIS PAGE

## MAJOR PRODUCTS LIST

| | Specification Section Number | Product | Name of Manufacturer, Trade Name, Model Number | Telephone number |
|---|---|---|---|---|
| 1. | | None | | |

**SUBMITTAL, TRANSMITTAL NO. _____**

| | |
|---|---|
| Project Name: Sonoma Valley County Sanitation District<br>Sewer Trunk Replacement (Agua Caliente Creek Crossing) | Date Received: |
| Owner: Sonoma Valley County Sanitation District<br>Attention: Construction Management Section<br>404 Aviation Boulevard<br>Santa Rosa, CA 95403-9019 | Checked By: |
| Contractor:<br>Address:<br><br>Attention: | Log Page:<br>Specification Section Number:<br>1st Submittal ☐ Resubmittal ☐ |

By Date

Contractor's signature above shall constitute Contractor's representation that it has satisfied its obligations under the Contract Documents with respect to Contractor's review and approval of Submittals.

| | |
|---|---|
| Date Transmitted: | Previous Transmittal Date: |

| No. Copies | Description | Manufacturer | Dwg. or Data No. | Action Taken* |
|---|---|---|---|---|
| | | | | |
| | | | | |
| | | | | |
| | | | | |
| | | | | |

Remarks:

* The action designated above is in accordance with the following legend:

A – No Exceptions Taken
B – Make Corrections Noted (No Resubmission Required)
C – Revise as Noted and Resubmit
D – Rejected - Resubmit
1. Not enough information for review
2. No reproducibles submitted
3. Copies illegible
4. Not enough copies submitted
5. Wrong sequence number
6. Wrong resubmittal number
7. Wrong Specification section number
8. Wrong form used
9. See comments

Comments:

By Date

## INSTALLATION, OPERATION, AND MAINTENANCE MANUAL, TRANSMITTAL NO. _____

| | |
|---|---|
| Project Name: Sonoma Valley County Sanitation District<br>Sewer Trunk Replacement (Agua Caliente Creek Crossing) | Date Received: |
| Owner: Sonoma Valley County Sanitation District<br>404 Aviation Boulevard<br>Santa Rosa, CA 95403-9019 | Attention: Construction Management Section |
| Contractor:<br>Address:<br><br>Attention: | Log Page:<br>Specification Section Number:<br>1st Submittal ☐ Resubmittal ☐ |

By Date

Contractor's signature above shall constitute Contractor's representation that it has satisfied its obligations under the Contract Documents with respect to Contractor's review and approval of Submittals.

| | |
|---|---|
| Date Transmitted: | Previous Transmittal Date: |

| No. Copies | Description | Manufacturer | Dwg. or Data No. | Action Taken* |
|---|---|---|---|---|
| | | | | |
| | | | | |
| | | | | |
| | | | | |
| | | | | |

Remarks:

* The action designated above is in accordance with the following legend:

A – No Exceptions Taken
B – Make Corrections Noted (No Resubmission Required)
C – Revise as Noted and Resubmit
D – Rejected - Resubmit– this manual Submittal is deficient in the following area:

1. Equipment record sheets
2. Functional description
3. Assembly, disassembly, installation, alignment, adjustment, and checkout instructions
4. Operating instructions

D – (continued)

5. Lubrication and maintenance instructions
6. Troubleshooting guide
7. Parts list and ordering instructions
8. Organization (indexing and tabbing)
9. Wiring diagrams and schematics specific to installation
10. Outline, cross section, and assembly diagrams
11. Test data and performance curves
12. Tag or equipment identification numbers
13. See comments

Comments:

By Date

SECTION 01410

# REGULATORY REQUIREMENTS

## PART 1 GENERAL

### 1.1 SUMMARY

A. Section includes: regulatory requirements that may be applicable to Contract Documents.
B. Specific reference in the Specifications to codes and regulations or requirements of regulatory agencies shall mean the latest printed edition of each adopted by the regulatory agency in effect at the time of the opening of Bids, except as may be otherwise specifically stated in the Contract Documents.
C. Should any conditions develop not covered by the Contract Documents wherein the finished Work will not comply with current codes, a Change Order detailing and specifying the required Work shall be submitted to and approved by Owner before proceeding with the Work.

### 1.2 REFERENCES TO REGULATORY REQUIREMENTS

A. Codes, laws, ordinances, rules and regulations referred to shall have full force and effect as though printed in full in these Specifications. Code, laws, ordinances, rules and regulations are not furnished to Contractor, because Contractor is assumed to be familiar with these requirements. The listing of applicable codes, laws, and regulations for hazardous waste abatement Work in the Contract Documents is supplied to Contractor as a courtesy and shall not limit Contractor's responsibility for complying with all applicable laws, regulations, or ordinances having application to the Work. Where conflict among the requirements or with these Specifications occurs, the most stringent requirements shall be used.
B. Conform to referenced codes, laws, ordinances, rules and regulations.

### 1.3 CODES

A. Codes that apply to Contract Documents include, but are not limited to, the following:
   1. CBC (Part 2, Title 24, CCR, including, without means of limitation, Sections 16A, 102A.23, 308, 420A, 504-506, 904.2.6, 1019 and 1604)
   2. CEC (Part 3, Title 24, CCR)
   3. CMC (Part 4, Title 24, CCR)
   4. CPC (Part 5, Title 24, CCR),
   5. State Elevator Safety Regulations (Part 7, Title 24, CCR)
   6. UPC
   7. UMC
   8. NEC
   9. Sonoma County Code

### 1.4 LAWS, ORDINANCES, RULES, AND REGULATIONS

A. During prosecution of Work to be done under Contract Documents, comply with applicable laws, ordinances, rules and regulations, including, but not limited to, the following:
   1. Federal:
      a. Americans With Disabilities Act of 1990
      b. 29 CFR, Section 1910.1001, Asbestos

c. 40 CFR, Subpart M, National Emission Standards for Asbestos
d. Executive Order 11246
e. Federal Endangered Species Act
f. Clean Water Act

2. State of California:
   a. California Code of Regulations, Titles 5, 8, 19, 21, 22, 24 and 25
   b. California Public Contract Code
   c. California Health and Safety Code
   d. California Government Code
   e. California Labor Code
   f. California Civil Code
   g. California Code of Civil Procedure
   h. CPUC General Order 95, Rules for Overhead Electric Line Construction
   i. CPUC General Order 128, Rules for Construction of Underground Electric Supply and Communications Systems
   j. Cal/OSHA
   k. OSHA: Hazard Communications Standards
   l. California Endangered Species Act
   m. Water Code
   n. Fish and Game Code
3. State of California Agencies:
   a. State and Consumer Services Agency
   b. Office of the State Fire Marshall
   c. Office of Statewide Health Planning and Development
   d. Department of Fish and Wildlife
   e. Bay Area Air Quality Management District
   f. San Francisco Bay Regional Water Quality Control Board
   g. North Coast Regional Water Quality Control Board
      1) Order No. 93-61
      2) Order No. 81-73
      3) Clean Water Act Section 401
4. County of Sonoma:
   a. Ordinance 3836R
   b. Building permit
   c. Electrical permit
   d. Grading permit
   e. Encroachment permit
   f. Valley Oak Protection Ordinance
5. Local Agencies:
   a. Applicable City Ordinances
   b. Northern Sonoma County Air Pollution Control District
6. Other Requirements:
   a. National Fire Protection Association (NFPA): Pamphlet 101, Life Safety.
   b. References on Drawings or in Specifications to "code" or "building code" not otherwise identified shall mean the codes specified in this Section 01410, together with all additions, amendments, changes, and interpretations adopted by code authorities of the jurisdiction.

B. Have access to all of the foregoing within 24 hours.

C. Other Applicable Laws, Ordinances and Regulations:
   1. Work shall be accomplished in conformance with all applicable laws, ordinances, rules and regulations of federal, state, and local governmental agencies and jurisdictions having authority over the Project.
   2. Work shall be accomplished in conformance with all rules and regulations of public utilities and utility districts.
   3. Where such laws, ordinances rules, and regulations require more care or greater time to accomplish Work, or require better quality, higher standards or greater size of products, Work shall be accomplished in conformance to such requirements with no change to the Contract Time and Contract Sum, except where changes in laws, ordinances, rules, and regulations occur subsequent to the time of opening of the Bids.
   4. Comply with Public Resources Code 5097.98, Health Safety Code 7050.5, and pertain to the discovery of human remains. If human remains are encountered, excavation or disturbance of the location must be halted in the vicinity of the find, and the county coroner contacted. If the coroner determines the remains are Native American, the coroner will contact the Native American Heritage Commission. The Native American Heritage Commission will identify the person or persons believed to be most likely descended from the deceased Native American. The most likely descendent makes recommendations regarding the treatment of the remains with appropriate dignity.

D. Change Orders and Claims. The California Public Contract Code (including but not limited to Section 7105 (d)(2)) applies to all contract procedures for changes, time extensions, change orders (time and money), and claims, and per California Government Code Section 930.2, et seq., Contractor's timely compliance with these procedures is a mandatory prerequisite to filing a Government Code Claim. Any change, alteration, modifications, waiver, or omission to implement these procedures, shall have no legal effect unless approved in advance in a fully executed Change Order approved by the Board. Federal construction law (U.S. v. Holspuch 326 U.S. 234) and the jurisprudence of the Federal District of Columbia Circuit shall supplement (but not supersede) California law on construction claims topics including but not limited to, termination claims, home office overhead claims, and delay/disruption claims.

## 1.5 PRECEDENCE

A. Where Drawings or Specifications require or describe products or execution of better quality, higher standard or greater size than required by applicable codes, ordinances and standards, Drawings and Specifications shall take precedence so long as such increase is legal.
B. Where no requirements are identified on Drawings or in Specifications, comply with all requirements of applicable codes, ordinances and standards of governing authorities having jurisdiction.
C. Conflicts between referenced regulatory requirements: Comply with the one establishing the more stringent requirement.
D. Conflicts between referenced regulatory requirements and Contract Documents: Comply with the one establishing the more stringent requirement.

## 1.6 REQUIRED PROVISIONS ON CONTRACT CLAIM RESOLUTION

A. The California Public Contract Code specifies required provisions on resolving contract claims less than $375,000, which are set forth below, and constitute a part of this Contract.
   1. For the purposes of this section, "Claim" means a separate demand by Contractor of $375,000 or less for (1) a time extension, (2) payment or money or damages arising from

Work done by or on behalf of Contractor arising under the Contract Documents and payment of which is not otherwise expressly provided for or the Claimant is not otherwise entitled to, or (3) an amount the payment of which is disputed by Owner. In order to qualify as a Claim, the written demand must state that it is a Claim submitted under Article 12 of Document 00700 (General Conditions) and be submitted in compliance with all requirements of Document 00700 (General Conditions), Article 12. Separate Claims which total more than $375,000 do not qualify as a "separate demand of $375,000 or less," as referenced above, and are not subject to this section.

2. A voucher, invoice, payment application, or other routine or authorized form of request for payment is not a Claim for purposes of this section. If such request is disputed as to liability or amount, then the disputed portion of the submission may be converted to a Claim under this section by submitting a separate claim in compliance with Contract Documents claim submission requirements.
3. Caution: This section does not apply to tort claims and nothing in this section is intended nor shall be construed to change the time periods for filing tort claims or actions specified by Chapter 1 and Chapter 2 of Part 3 of Division 3.6 of Title 1 of the California Government Code.

B. Procedure:
1. The Claim must be in writing, submitted in compliance with all requirements of Document 00700 (General Conditions), Article 12, including, but not limited to, the time prescribed by and including the documents necessary to substantiate the Claim, pursuant to Document 00700 (General Conditions), paragraph 12.3. Claims must be filed on or before the day of final payment. Nothing in this section is intended to extend the time limit or supersede notice requirements for the filing of claims as set forth in Document 00700 (General Conditions), Article 12 or elsewhere in the Contract Documents.
2. For Claims of fifty thousand dollars ($50,000) or less
   a. Owner shall respond in writing within 45 days of receipt of the Claim, or
   b. Owner may request in writing within 30 days of receipt of the Claim, any additional documentation supporting the Claim or relating to any defenses or claims Owner may have against Claimant.
      1) If additional information is thereafter required, it shall be requested and provided in accordance with this section, upon mutual agreement of Owner and Claimant.
      2) Owner's written response to the Claim, as further documented, shall be submitted to Claimant within 15 days after receipt of further documentation or within a period of time no greater than taken by Claimant in producing the additional information, whichever is greater.
3. For Claims over Fifty Thousand Dollars ($50,000) and less than or equal to $375,000:
   a. Owner shall respond in writing within 60 days of receipt of the Claim, or
   b. Owner may request in writing within 30 days of receipt of the Claim, any additional documentation supporting the Claim or relating to any defenses or claims Owner may have against Claimant.
      1) If additional information is thereafter required, it shall be requested and provided in accordance with this section, upon mutual agreement of Owner and Claimant;
      2) Owner's written response to the Claim, as further documented, shall be submitted to Claimant within 30 days after receipt of further documentation or

within a period of time no greater than taken by Claimant in producing the additional information, whichever is greater.

4. Meet and Confer:
   a. If Claimant disputes Owner's written response, or Owner fails to respond within the time prescribed above, Claimant shall notify Owner, in writing, either within 15 days of receipt of Owner's response or within 15 days of Owner's failure to timely respond, and demand an informal conference to meet and confer for settlement of the issues in dispute. Upon demand Owner will schedule a meet and confer conference within 30 days for settlement of the dispute.
   b. Following the meet and confer conference, if the Claim or any portion remains in dispute, Claimant may file a claim as provided in Chapter 1 (commencing with Section 900) and Chapter 2 (commencing with Section 910) of Part 3 of Division 3.6 of Title 1 of the California Government Code. For purposes of those provisions, the running of the period of time within which a claim must be filed shall be tolled from the time Claimant submits its written claim as set forth in paragraph 12.2.B of Document 00700 (General Conditions), until the time that Claim is denied as a result of the meet and confer process, including any period of time utilized by the meet and confer process.

## 1.7 COMPLIANCE WITH AMERICANS WITH DISABILITIES ACT

A. Contractor acknowledges that, pursuant to the Americans with Disabilities Act (ADA), programs, services, and other activities provided by a public entity to the public, whether directly or through a contractor, must be accessible to the disabled public. Contractor shall provide the services specified in the Contract Documents in a manner that complies with the ADA and any and all other applicable federal, state, and local disability rights legislation. Contractor agrees not to discriminate against disabled persons in the provision of services, benefits, or activities provided under this Agreement and further agrees that any violation of this prohibition on the part of Contractor, its employees, agents, or assigns shall constitute a material breach of the Contract Documents.

## 1.8 SUBSTITUTION OF SECURITIES IN LIEU OF RETENTION

A. In accordance with the provisions of Public Contract Code Section 22300, substitution of securities for any moneys withheld under Contract Documents to ensure performance is permitted under following conditions:
   1. At request and expense of Contractor, securities listed in Section 16430 of the Government Code, bank or savings and loan certificates of deposit, interest bearing demand deposit accounts, standby letters of credit, or any other security mutually agreed to by Contractor and Owner which are equivalent to the amount withheld under retention provisions of Contract shall be deposited with Controller or with a state or federally chartered bank in California, as the escrow agent, who shall then pay such moneys to Contractor. Upon satisfactory completion of Contract, securities shall be returned to Contractor.
   2. Alternatively, Contractor may request and Owner shall make payment of retentions earned directly to the escrow agent at the expense of Contractor. At the expense of Contractor, Contractor may direct the investment of the payments into securities and receive the interest earned on the investments upon the same terms provided for in this Section 01410 for securities deposited by Contractor. Upon satisfactory completion of Contract Documents, Contractor shall receive from escrow agent all securities, interest, and payments received by the escrow agent from Owner, pursuant to the terms of this

Section 01410. Pay to each Subcontractor, not later than 20 Days after receipt of the payment, the respective amount of interest earned, net of costs attributed to retention withheld from each Subcontractor, on the amount of retention withheld to insure the performance of Contractor.

3. Contractor shall be beneficial owner of securities substituted for moneys withheld and shall receive any interest thereon.
4. Enter into escrow agreement with Controller according to Document 00680 (Escrow Agreement for Security Deposits in Lieu of Retention), as authorized under Public Contract Code Section 22300, specifying amount of securities to be deposited, terms and conditions of conversion to cash in case of default of Contractor, and termination of escrow upon completion of Contract Documents.
5. Public Contract Code Section 22300 is hereby incorporated in full by this reference.

## PART 2 PRODUCTS – NOT USED

## PART 3 EXECUTION – NOT USED

END OF SECTION

SECTION 01411

# REGULATORY REQUIREMENTS - HAZARDOUS MATERIALS

## PART 1 GENERAL

### 1.1 SUMMARY

A. Section Includes:
   1. Regulatory requirements applicable to Work in connection with hazardous waste abatement and disposal including, but not limited to, Asbestos and Asbestos-containing materials, lead-based paint, polychlorinated biphenyls, petroleum-contaminated soils and materials, construction and demolition debris and any other hazardous substance or hazardous waste.

B. This Section supplements Section 01410 (Regulatory Requirements) and the Work-specific listings of applicable regulatory requirements elsewhere in the Specifications.

### 1.2 LAWS, ORDINANCES, RULES, AND REGULATIONS

A. During prosecution of Work under Contract Documents, Contractor shall comply with applicable laws, ordinances, rules and regulations including, but not limited to, those listed below.

B. Federal:
   1. Statutory Requirements:
      a. Resource Conservation and Recovery Act, 42 U.S.C. Sections 6901 *et seq.*
      b. Comprehensive Environmental Response, Compensation and Liability Act of 1980, as amended by the Superfund Amendments and Reauthorization Act of 1986, 42 U. S.C. Sections 9601 *et seq.*
      c. Toxic Substances Control Act of 1976, 15 U.S.C., Sections 2601 *et seq.*
      d. Hazardous Materials Transportation Act of 1975, 49 U.S.C. Sections 1801 *et seq.*
      e. Clean Water Act, 33 U.S.C. Sections 1251 *et seq.*
      f. Safe Drinking Water Act, 42 U.S.C., Sections 3001 *et seq.*
      g. Clean Air Act, Section 112, 42 U.S.C., Section 7412
      h. Occupational Safety and Health Act of 1970, 29 U.S.C., Sections 651 *et seq.*
      i. Underground Storage Tank Law, 42 U.S.C., Sections 6991 *et seq.*
      j. The Emergency Planning and Community Right to Know Act of 1986, 42 U.S.C., Sections 11011 *et seq.*
   2. Environmental Protection Agency (EPA):
      a. 40 C.F.R. Parts 260, 264, 265, 268, 270
      b. 40 C.F.R. Parts 258 *et seq.*
      c. 40 C.F.R. Part 761
      d. 40 C.F.R. Parts 122-124
   3. Occupational Safety and Health Administration (OSHA):
      a. OSHA Worker Protection Standards, Title 29 C.F.R. Part 1926.58, Construction Standards and 29 C.F.R. 1910.1001 General Industry Standard
      b. OSHA, 29 C.F.R. Part 1926.1101, Construction Standards for Asbestos
      c. OSHA, Lead Exposure in Construction: Interim Final Rule, 29 C.F.R. 1926.62
      d. National Emission Standard for Hazardous Air Pollutants, Title 40 C.F.R. Part 61
      e. Asbestos Hazardous Emergency Response Act, Title 40 C.F.R. 763

4. Department of Transportation:
   a. Title 49 C.F.R. 173.1090
   b. Title 49 C.F.R. 172
   c. Title 49 C.F.R. 173
   d. DOT, HM 181 and MH126f

C. State of California Requirements:
1. Statutory Law:
   a. The Carpenter-Presley-Tanner Hazardous Substance Account Act, Health & Safety Code, Sections 25300 *et seq.*
   b. Health and Safety Code, Section 25359.4
   c. Hazardous Waste Control Law, Health & Safety Code, Sections 25100 *et seq.*
   d. Porter-Cologne Water Quality Control Act, Water Code, Sections 13000 *et seq.*
   e. Health and Safety Code, Sections 25915-25924
   f. California Labor Code Chapter 6, including, without limitation, Sections 6382, 6501.5-6501.9, 6503.5, 9021.5, 9080
   g. Business and Professions Code, including without limitation, Sections 7058.5, 7065.01, 7118.5
   h. Underground Storage of Hazardous Substance Act, Health and Safety Code, Sections 25280 *et seq.*
   i. Petroleum Underground Storage Tank Cleanup, Health and Safety Code, Sections 25299.10 *et seq.*
   j. Safe Drinking Water and Toxic Enforcement Act of 1986, Health & Safety Code, Sections 25249.5 *et seq.* (Proposition 65)
   k. Above Ground Petroleum Storage Act, Health and Safety Code, Sections 25270 *et seq.*
   l. Hazardous Materials Release Response Plans and Inventory, Health and Safety Code, Chapter 6.95
2. Administrative Code and Regulations:
   a. Title 22 CCR Division 4.5, Environmental Health Standards for the Management of Hazardous Waste, Sections 6600 *et seq.*
   b. Cal/OSHA Worker Protection Standards, Title 8 CCR, Sections 1529, 5208
   c. Title 8 CCR, Section 1532.1, Lead in Construction
   d. Title 23 CCR, Sections 2610 *et seq.*
3. Local State Agency Requirements:
   a. Bay Area Air Quality Management District, Fugitive Dust Rules
   b. Bay Area Air Quality Management District Regulation 11-2-303
   c. State Water Resource Control Board, General Construction Activity Stormwater Permit Requirements (Order 92-O8 DWQ)
   d. Local Agency Requirements:
      1) Schell-Vista Fire Department

## PART 2 PRODUCTS – NOT USED

## PART 3 EXECUTION – NOT USED

END OF SECTION

SECTION 01420

# REFERENCES AND DEFINITIONS

## PART 1 GENERAL

### 1.1 SUMMARY

A. Section Includes: Reference standards, abbreviations, symbols, definitions, and terminology used in Contract Documents.
B. Full titles are given in this Section for standards cited in other Sections of Specifications.
C. Material and workmanship specified by reference to number, symbol, or title of specific standard such as state standard, commercial standard, federal specifications, technical society, or trade association standard, or other similar standard, shall comply with requirements of standards except when more rigid requirements are specified or required by applicable codes.
D. Standards referred to, except as modified herein, shall have full force and effect as though printed in the Contract Documents. Standards are not furnished to Contractor because manufacturers and trades involved are assumed to be familiar with their requirements.

### 1.2 REFERENCE TO STANDARDS AND SPECIFICATIONS OF TECHNICAL SOCIETIES; REPORTING AND RESOLVING DISCREPANCIES

A. Reference to standards, specifications, manuals, or codes of any technical society, organization, or association, or to the laws or regulations of any governmental authority, whether such reference be specific or by implication, shall mean the latest standard, specification, manual, code, or laws or regulations (including all amendments, changes, errata, addenda, and supplements) in effect at the time of opening of Bids, except as may be otherwise specifically stated in the Contract Documents.
   1. When an edition or effective date of a reference is not given, it shall be understood to be the current edition or latest revision published as of the date of opening Bids.
      a. Exception: Comply with issues in effect as listed in governing legal requirements.
B. If during the performance of the Work, Contractor discovers any conflict, error, ambiguity, or discrepancy within the Contract Documents or between the Contract Documents and any provision of any such law or regulation applicable to the performance of the Work or of any such standard, specification, manual, or code, or of any instruction of any supplier, report it in writing at once by submitting a RFI to Owner, and do not proceed with the Work affected thereby until consent to do so is given by Owner.
C. Except as otherwise specifically stated in the Contract Documents or as may be provided by Change Order, CCD, or Supplemental Instruction, the provisions of the Contract Documents shall take precedence in resolving any conflict, error, ambiguity, or discrepancy between the provisions of the Contract Documents and:
   1. The provisions of any such standard, specification, manual, code, or instruction (whether or not specifically incorporated by reference in the Contract Documents); or
   2. The provisions of any such laws or regulations applicable to the performance of the Work (unless such an interpretation of the provisions of the Contract Documents would result in violation of such law or regulation).
D. No provision of any such standard, specification, manual, code, or instruction shall be effective to change the duties and responsibilities of Owner, Contractor, or Engineer, or any of their subcontractors, consultants, agents, or employees, from those set forth in the

Contract Documents, nor shall it be effective to assign to Owner, Engineer, or any of their consultants, agents, representatives or employees any duty or authority to supervise or direct the furnishing or performance of the Work or any duty or authority to undertake responsibility inconsistent with the provisions of the Contract Documents.

E. Comply with the applicable portions of standards and specifications published by the technical societies, institutions, associations, and governmental agencies referred to in Specifications.

F. Referenced Grades, Classes, and Types: Where an alternative or optional grade, class, or type of product or execution is included in a reference but is not identified in Drawings or in Specifications, provide the highest, best, and greatest of the alternatives or options for the intended use and prevailing conditions.

G. Jobsite Copies:
   1. Obtain and maintain at the Site copies of reference standards identified on Drawings and in Specifications in order to properly execute the Work.
   2. At a minimum, the following shall be readily available at the Site:
      a. Safety Codes: State of California, Division of Industrial Safety regulations.

H. ASTM and ANSI References: Specifications and Standards of the American Society for Testing and Materials International (ASTM International) and the American National Standards Institute (ANSI) are identified in the Drawings and Specifications by abbreviation and number only and may not be further identified by title, date, revision, or amendment. It is presumed that Contractor is familiar with and has access to these nationally- and industry-recognized specifications and standards.

## 1.3 ABBREVIATIONS

A. Listed hereinafter are the various organizations or references which may appear in the Contract Documents, along with their respective acronyms and/or abbreviations:

| | |
|---|---|
| AA | Aluminum Association |
| AABC | Associated Air Balance Council |
| AAMA | Architectural Aluminum Manufacturers Association |
| AAP | Affirmative Action Program |
| AASHTO | American Association of State Highway and Transportation Officials |
| AB | Aggregate Base |
| ABMA | American Bearing Manufacturers Association |
| ABPA | American Board Products Association |
| ACI | American Concrete Institute |
| ADA | Americans with Disabilities Act |
| AED | Association of Equipment Distributors |
| AFBMA | Anti-friction Bearing Manufacturers Association |
| AGA | American Gas Association |
| AGMA | American Gear Manufacturers Association |
| AISC | American Institute of Steel Construction |
| AISI | American Iron and Steel Institute |
| AITC | American Institute of Timber Construction |
| AMCA | Air Moving and Conditioning Association, Inc. |
| ANSI | American National Standards Institute (formerly American Standards Association) |
| APA | American Plywood Association |

| | |
|---|---|
| API | American Petroleum Institute |
| ARI | Air-Conditioning and Refrigeration Institute |
| ASCE | American Society of Civil Engineers |
| ASHRAE | American Society of Heating, Refrigeration, and Air-Conditioning Engineers |
| ASME | American Society of Mechanical Engineers |
| ASSE | American Society of Safety Engineers |
| ASTM | ASTM International |
| AWCI | Association of the Wall and Ceiling Industries |
| AWG | American Wire Gauge |
| AWPA | American Wood-Preservers' Association |
| AWPB | American Wood Preservers Bureau |
| AWS | American Welding Society |
| AWWA | American Water Works Association |
| BHMA | Builders Hardware Manufacturers Association |
| BIL | Basic Insulation Level |
| BOD | Biological Oxygen Demand |
| Cal/OSHA | California Occupational Safety and Health Administration |
| Caltrans | State of California, Department of Transportation |
| CBC | California Building Code |
| CCD | Construction Change Directive |
| CCR | California Code of Regulations |
| CEC | California Electric Code or California Energy Commission |
| CF | Cubic Foot or Cubic Feet |
| CFM | Cubic Feet per Minute |
| CFR | Code of Federal Regulations |
| CGA | Common Ground Alliance |
| CI | Chlorine Institute, Inc. |
| CISPI | Cast Iron Soil Pipe Institute |
| CL | Center Line |
| CLMFI | Chain Link Fence Manufacturers Institute |
| CMAA | Crane Manufacturers Association of America, Inc. |
| CMC | California Mechanical Code |
| CO | Change Order |
| COE | United States Army Corps of Engineers |
| CPC | California Plumbing Code |
| CPM | Critical Path Method |
| CPUC | California Public Utilities Commission |
| CRA | California Redwood Association |
| CRSI | Concrete Reinforcing Steel Institute |
| CS | Commercial Standards, U.S. Department of Commerce |
| CSA | Canadian Standards Association |
| CY | Cubic Yard or Cubic Yards |
| DBE | Disadvantaged Business Enterprise |
| DFPA | Douglas Fir Plywood Institute |
| DFT | Dry Film Thickness |
| DHI | Door and Hardware Institute |
| EIA | Electronic Industries Association |

| | |
|---|---|
| EPA | Environmental Protection Agency |
| ETL | Electrical Testing Laboratories |
| FGMA | Flat Glass Marketing Association |
| FPS | Feet per Second or Fluid Power Society |
| FS | Federal Specifications |
| GA | Gypsum Association |
| GPM | Gallons Per Minute |
| Greenbook | Standard Specifications for Public Works Construction |
| HI | Hydraulic Institute |
| HMI | Hoist Manufacturer's Institute |
| HMMA | Hollow Metal Manufacturer's Association |
| HP | Horse Power |
| HPMA | Hardwood Plywood Manufacturers Association |
| HVAC | Heating, Ventilating and Air Conditioning |
| IACS | International Annealed Copper Standards |
| IAPMO | International Association of Plumbing and Mechanical Officials |
| ICBO | International Conference of Building Officials |
| ICEA | Insulated Cable Engineers Association |
| ID | Identification or Inside Diameter |
| IEEE | Institute of Electrical and Electronic Engineers |
| IES | Illuminating Engineering Society |
| ISA | International Society of Arboriculture |
| ISAS | Instrumentation, Systems, and Automation Society |
| ISO | International Organization for Standardization |
| JATC | Joint Apprenticeship Training Committee |
| JV | Joint Venture |
| LBE | Local Business Enterprise |
| LLC | Limited Liability Corporation or Company |
| LS | Lump Sum |
| M.I. | Middle Initial |
| M/WBE | Minority and/or Woman-Owned Business Enterprise |
| MBE | Minority Business Enterprise |
| MGD | Million Gallons per Day |
| MIA | Masonry Institute of America |
| MIA | Marble Institute of America |
| MLSFA | Metal Lath/Steel Framing Association |
| MS | Military Specifications |
| MSDS | Material Safety Data Sheet |
| MSS | Manufacturers Standardization Society of the Valve & Fitting Industry |
| NAAMM | National Association of Architectural Metal Manufacturers |
| NACE | National Association of Corrosion Engineers |
| NBS | National Bureau of Standards |
| NEC | National Electric Code |
| NEMA | National Electric Manufacturers Association |
| NESC | National Electrical Safety Code |
| NFoPA | National Forest Products Association |
| NFPA | National Fire Protection Association |
| NIC | Not In Contract |

| | |
|---|---|
| NIOSH | National Institute for Occupational Safety and Health |
| NIST | National Institute of Standards and Technology |
| NPT | National Pipe Thread |
| NRMCA | National Ready Mixed Concrete Association |
| NSF | National Sanitation Foundation |
| NTS | Not to Scale |
| NWWDA | National Wood Windows and Doors Association |
| OC | On Center |
| OD | Outside Diameter |
| OSHA | Occupational Safety and Health Administration |
| OSHPD | Office of Statewide Health Planning and Department |
| PCA | Portland Cement Association |
| PCI | Prestressed Concrete Institute |
| PDI | Plumbing and Drainage Institute |
| PG&E | Pacific Gas and Electric Company |
| PL | Property Line |
| PLC | Programmable Logic Controller |
| PM | Preventive Maintenance |
| PPM | Parts per Million |
| PR | Proposal Request |
| PRMD | Permits and Resource Management Department, County of Sonoma |
| PS | Product Standard, U. S. Department of Commerce |
| PSF or psf | Pounds per Square Foot |
| PSI or psi | Pounds per Square Inch |
| PSIG | Pounds per Square Inch Gauge |
| PVC | Polyvinyl chloride |
| RC | Relative Compaction |
| RFI | Request for Information |
| RFP | Request for Proposals |
| RFS | Request for Substitution |
| RIS | Redwood Inspection Service |
| RPM | Revolutions per Minute |
| SAE | Society of Automotive Engineers |
| SDeI | Steel Deck Institute |
| SDoI | Steel Door Institute |
| SDR | Standard Dimension Ratio |
| SF | Square Foot or Square Feet |
| SFM | State of California, Office of State Fire Marshal |
| SIDR | Standard Inside Dimension Ratio |
| SIGMA | Sealed Insulating Glass Manufacturers Association |
| SJI | Steel Joint Institute |
| SMACNA | Sheet Metal and Air Conditioning Contractors National Association |
| SPIB | Southern Pine Inspection Bureau |
| SSPC | Society for Protective Coating (formerly Steel Structures Painting Council) |
| SWI | Steel Window Institute |
| TCA | Tile Council of America |
| TIE | Time Impact Evaluation |
| TMS | The Masonry Society |

| | |
|---|---|
| TPI | Truss Plate Institute Inc. |
| UFC | Uniform Fire Code |
| UL | Underwriters' Laboratories, Inc. |
| UMC | Uniform Mechanical Code |
| UPC | Uniform Plumbing Code |
| USA | Underground Service Alert |
| USACE | United States Army Corps of Engineers |
| USC | United States Code |
| VOC | Volatile Organic Compounds |
| WBE | Women's Business Enterprise |
| WCLIB | West Coast Lumber Inspection Bureau |
| WHI | Warnock Hersey International |
| WIC | Woodwork Institute of California |
| WWPA | Western Wood Products Association |
| WWPI | Western Wood Preservers Institute |

B. Abbreviations in Specifications:

| | |
|---|---|
| cm | centimeter (centimeters) |
| Co. | Company |
| Corp. | Corporation |
| cu | Cubic |
| dia | diameter |
| Div | Division |
| ft | foot (feet) |
| g | gram (grams) or Standard Acceleration of Gravity |
| gal | gallon (gallons) |
| gpd | gallons per Day |
| hr | hour |
| in | inch (inches) |
| Inc. | Incorporated |
| kg | kilogram (kilograms) |
| km | kilometer (kilometers) |
| kVAR | kilovolts amperes reactive |
| kW | kilowatt |
| l | liter (liters) |
| lb(s) | Pound(s) |
| m | meter (meters) |
| mfr | manufacturer |
| mg | milligram (milligrams) |
| ml/mls | milliliter (milliliters) |
| mm | millimeter (millimeters) |
| No | number |
| sq | square |
| Sta | Station |
| T & G | tongue and groove |
| Typ | typical |
| US | United States |

| | |
|---|---|
| yd | yard (yards) |

C. Abbreviations on Drawings:
   1. As listed for Specifications above.
   2. Additional abbreviations, used only on Drawings, are indicated thereon.

## 1.4 SYMBOLS

A. Symbols in Specifications:

| | |
|---|---|
| : | "shall be" or "shall" - where used within sentences or paragraphs |
| #1 | number |
| 1# | pound |
| & | and |
| % | percent |
| C | Centigrade |
| F | Fahrenheit |
| ° | degree |
| / | "per," except where used to combine words; example: power/fuel, and in that case it means "and" |
| " | inch (inches) |
| ' | foot (feet) |
| @ | at |

B. Symbols on Drawings:
   1. As listed for Specifications above.
   2. Symbols, used only on Drawings, are indicated thereon.

## 1.5 DEFINITIONS

A. Wherever any of the words or phrases defined below, or a pronoun used in place thereof, is used in any part of the Contract Documents, it shall have the meaning here set forth. In the Contract Documents, the neuter gender includes the feminine and masculine, and the singular number includes the plural.

B. The following definitions shall apply regardless of capitalization unless the context otherwise requires:
   1. Wherever words "as directed," "as required," "as permitted," or words of like effect are used, it shall be understood that direction, requirements, or permission of Owner is intended. Words "sufficient," "necessary," "proper," and the like shall mean sufficient, necessary, or proper in judgment of Owner. Words "approved," "acceptable," "satisfactory," "favorably reviewed," or words of like import, shall mean approved by, or acceptable to, or satisfactory to, or favorably reviewed by Owner.
   2. Wherever the word "may" or "ought" is used, the action to which it refers is discretionary. Wherever the word "shall" or "will" is used, the action to which it refers is mandatory.
   3. Addenda: Written or graphic instruments issued prior to the opening of Bids, which clarify, correct, or change the bidding requirements or the Contract Documents. Addenda shall not include the minutes of the Pre-Bid Conference, if any, or Site Visit.

4. Agency: The Sonoma County Water Agency (SCWA), a public agency of the State of California, acting under and by virtue of the authority vested in the Owner by the laws of the State of California as an agent of District.
5. Agreement (Document 00520): Agreement is the basic Contract Document that binds the parties to construction Work. Agreement defines relationships and obligations between Owner and Contractor and by reference incorporates Conditions of Contract, Drawings, and Specifications and contains Addenda and all Modifications subsequent to execution of Contract Documents.
6. Alternate: Work added to or deducted from the base Bid, if accepted by Owner.
7. Application for Payment: Written application for monthly or periodic progress or final payment made by Contractor complying with the Contract Documents.
8. Approved Equal: Approved in writing by Owner as being of equivalent quality, utility and appearance.
9. Asbestos: Any material that contains more than one percent asbestos and is friable or is releasing asbestos fibers into the air above current action levels established by OSHA or Cal/OSHA.
10. Bid: The offer or proposal of the Bidder submitted on the prescribed form(s) setting forth the prices for the Work to be performed.
11. Bidder: One who submits a Bid.
12. Bidding Documents: All documents comprising the Project Manual (including all documents and Specification Sections listed in Document 00010 [Table of Contents]), including documents supplied for bidding purposes only and Contract Documents.
13. Board: The Board of Directors of the Owner.
14. Business Day: Any Day other than Saturday, Sunday, and the following days that have been designated as holidays by Owner. If a holiday falls on a Saturday, the preceding Friday will be the holiday. If a holiday falls on a Sunday, the following Monday will be the holiday.
    a. New Year's Day, January 1;
    b. Martin Luther King Jr.'s Birthday, third Monday in January;
    c. Lincoln's Birthday, February 12;
    d. Presidents' Day, third Monday in February;
    e. Memorial Day, last Monday in May;
    f. Independence Day, July 4;
    g. Labor Day, first Monday in September;
    h. Veterans' Day, November 11;
    i. Thanksgiving Day, as designated by the President;
    j. The Day following Thanksgiving Day;
    k. Christmas Day, December 25; and
    l. Each day appointed by the Governor of California and formally recognized by the Sonoma County Board of Supervisors as a day of mourning, thanksgiving, or special observance.
15. By Owner: Work that will be performed by Owner or its agents at the Owner's expense.

16. By Others: Work that is outside scope of Work to be performed by Contractor under this Contract, which will be performed by Owner, other contractors, or other means.
17. Change Order: A written instrument prepared by Owner and signed by Owner and Contractor, stating their agreement upon all of the following:
    a. a change in the Work;
    b. the amount of the adjustment in the Contract Sum, if any; and
    c. the amount of the adjustment in the Contract Time, if any.
18. Code Inspector: A local or state agency responsible for the enforcement of applicable codes and regulations.
19. Concealed: Work not exposed to view in the finished Work, including within or behind various construction elements.
20. Construction Change Directive ("CCD"): A written order prepared and signed by Owner, directing a change in the Work and stating a proposed basis for adjustment, if any, in the Contract Sum or Contract Time, or both.
21. Contract Conditions or Conditions of the Contract: Consists of two parts: General Conditions and Supplementary Conditions.
    a. General Conditions are general clauses that are common to the Owner Contracts, including Document 00700 (General Conditions).
    b. Supplementary Conditions modify or supplement General Conditions to meet specific requirements for these Contract Documents, including Document 00800 (Supplementary Conditions) and Document 00805 (Supplementary Conditions – Hazardous Materials).
22. Contract Documents and Contract: Contract Documents and Contract shall consist of the documents identified as the Contract Documents in Document 00520 (Agreement), plus all changes, Addenda, and Modifications thereto.
23. Contract Modification: Either:
    a. a written amendment to Contract signed by Contractor and Owner; or
    b. a Change Order; or
    c. a Construction Change Directive; or
    d. a written directive for a minor change in the Work issued by Owner.
24. Contract Sum: The sum stated in the Agreement and, including authorized adjustments, the total amount payable by Owner to Contractor for performance of the Work and the Contract Documents. The Contract Sum is also sometimes referred to as the Contract Price or the Contract Amount.
25. Contract Time: The number or numbers of Days or the dates stated in the Agreement:
    a. to achieve Substantial Completion of the Work or designated Milestones; and/or
    b. to complete the Work so that it is ready for final payment and is accepted.
26. Contractor: The person or entity identified as such in the Agreement and referred to throughout the Contract Documents as if singular in number and neutral in gender. The term "Contractor" means the Contractor or its authorized representative.
27. Contractor's Employees: Persons engaged in execution of Work under Contract as direct employees of Contractor, as Subcontractors, or as employees of Subcontractors.

28. Day: One calendar day of 24 hours measured from midnight to the next midnight, unless the word "day" is specifically modified to the contrary.
29. Defective: An adjective which, when modifying the word "Work," refers to Work that is unsatisfactory or unsuited for the use intended, faulty, or deficient, that does not conform to the Contract Documents, or does not meet the requirements of any inspection, reference standard, test or approval referred to in the Contract Documents (including but not limited to approval of Samples and "or equal" items), or has been damaged prior to final payment (unless responsibility for the protection thereof has been assumed by Owner). Owner is the judge of whether Work is Defective.
30. District: The Sonoma Valley County Sanitation District, a local district of the State of California, acting by and through its Board of Directors.
31. Drawings: The graphic and pictorial portions of Contract Documents, wherever located and whenever issued, showing the design, location and dimensions of the Work, generally including plans, elevations, sections, details, schedules, and diagrams.
32. Engineer: If used elsewhere in the Contract Documents, "Engineer" shall mean a person holding a valid California State Architect's or Engineer's license representing the Owner in the administration of the Contract Documents. Engineer may be an employee of or an independent consultant to Owner. When Engineer is referred to within the Contract Documents and no Engineer has in fact been designated, then the matter shall be referred to Owner. The term Engineer shall be construed to include employees of Engineer and/or employees that Engineer supervises. When the designated Engineer is an employee of Owner, his or her authorized representatives on the Project will be included under the term Engineer. If Engineer is an employee of Owner, or Agency, Engineer is the beneficiary of all Contractor obligations to Owner, including without limitation, all releases and indemnities.
33. Equal: Equal in opinion of Owner. Burden of proof of equality is responsibility of Contractor.
34. Exposed: Work exposed to view in the finished Work, including behind louvers, grilles, registers and various other construction elements.
35. Final Acceptance or Final Completion: Owner's acceptance of the Work as satisfactorily completed in accordance with Contract Documents. Requirements for Final Acceptance/Final Completion include, but are not limited to:
    a. All systems having been tested and accepted as having met requirements of Contract Documents.
    b. All required instructions and training sessions having been given by Contractor.
    c. All required permitting reports.
    d. All Project Record Documents having been submitted by Contractor, reviewed by Owner, and accepted by Owner.
    e. All punch list Work, as directed by Owner, having been completed by Contractor.
    f. Generally all Work, except Contractor maintenance after Final Acceptance/Final Completion, having been completed to satisfaction of Owner.
36. Force Account: Work directed to be performed without prior agreement as to lump sum or unit price cost thereof, and which is to be billed at cost for labor, materials, equipment, taxes, and other costs, plus a specified percentage for overhead and profit.
37. Furnish: Supply only, do not install.

38. Indicated: Shown or noted on the Drawings.
39. Install: Install or apply only, do not furnish.
40. Latent: Not apparent by reasonable inspection, including but not limited to, the inspections and research required as a condition to bidding under Document 00700 (General Conditions).
41. Law: Unless otherwise limited, all applicable laws including without limitation all federal, state, and local laws, statutes, standards, rules, regulations, ordinances, and judicial and administrative decisions.
42. Material: This word shall be construed to embrace machinery, manufactured articles, materials of construction (fabricated or otherwise), and any other classes of material to be furnished in connection with Contract, except where a more limited meaning is indicated by context.
43. Milestone: A principal event specified in Contract Documents relating to an intermediate completion date or time prior to Substantial Completion of all Work.
44. Modification: Same as Contract Modification.
45. Not in Contract: Work that is outside the scope of Work to be performed by Contractor under Contract Documents.
46. Notice of Completion: Shall have the meaning provided in California Civil Code Section 9204, and any successor statute.
47. Off Site: Outside geographical location of the Project.
48. Owner: The District.
49. Owner-Furnished, Contractor-Installed: Items furnished by Owner at its cost for installation by Contractor at its cost under Contract Documents.
50. Owner's Representative(s): See Document 00520 (Agreement).
51. Partial Utilization: Use by Owner of a substantially completed part of the Work for the purpose for which it is intended (or a related purpose) prior to Substantial Completion of all of the Work.
52. PCBs: Polyclorinated byphenyls.
53. Phase: A specified portion of the Work (if any) specifically identified as a Phase in Document 00520 (Agreement) or Document 01100 (Summary).
54. Product Data: That information (brochures, catalog sheets, manufacturer's cut sheets, etc.) supplied by vendors having technical and commercial characteristics of the supplied equipment or materials and accompanying commercial terms such as warranties, instructions, and manuals.
55. Progress Report: A periodic report submitted by Contractor to Owner with progress payment invoices accompanying progress schedule. See Section 01320 (Progress Schedules and Reports and Document 00700 (General Conditions).
56. Project: Total construction of which Work performed under Contract Documents may be whole or part.
57. Project Float: As defined in paragraph 1.2.B.3, Section 01320 (Progress Schedules and Reports).
58. Project Manual: Project Manual consists of Bidding Requirements, Agreement, Bonds, Certificates, Contract Conditions, Drawings, and Specifications.

59. Project Record Documents: All Project deliverables required under Sections 01700 et seq., including without limitation, as-built drawings; Project Record Specifications; Installation, Operation, and Maintenance Manuals; and Machine Inventory Sheets.
60. Provide: Furnish and install.
61. Request for Information ("RFI"): A document prepared by Contractor requesting information regarding the Project or Contract Documents as provided in Section 01250 (Modification Procedures). The RFI system is also a means for Owner to submit Contract Document clarifications or supplements to Contractor.
62. Request for Proposals ("RFP"): A document issued by Owner to Contractor whereby Owner may initiate changes in the Work or Contract Time as provided in Contract Documents. See Section 01250 (Modification Procedures).
63. Request for Substitution ("RFS"): A document prepared by Contractor requesting substitution of materials as permitted and to the extent permitted in Contract Documents. See Section 01600 (Product Requirements).
64. RFI-Reply: A document consisting of supplementary details, instructions, or information issued by Owner that clarifies or supplements Contract Documents, and with which Contractor shall comply. RFI-Replies do not constitute changes in Contract Sum or Contract Time except as otherwise agreed in writing by Owner. RFI-Replies will be issued through the RFI administrative system.
65. Samples: Physical examples of materials, equipment, or workmanship that are representative of some portion of the Work and which establish the standards by which such portion of the Work will be judged.
66. Sanitation Standards: The Sonoma County Water Agency Design and Construction Standards for Sanitation Facilities.
67. Shop Drawings: All drawings, diagrams, illustrations, schedules, and other data or information which are specifically prepared or assembled by or for Contractor and submitted by Contractor to illustrate some portion of the Work.
68. Shown: As indicated on Drawings.
69. Site: The particular geographical location of Work performed pursuant to Contract Documents.
70. Specifications: The written portion of the Contract Documents consisting of requirements for materials, equipment, construction systems, standards, and workmanship for the Work; performance of related services; and are contained in Divisions 1 through 16.
71. Specified: As written in Specifications.
72. Subcontractor: A person or entity that has a direct contract with Contractor to perform a portion of the Work at the Site. The term "Subcontractor" is referred to throughout the Contract Documents as if singular in number and neutral in gender and means a Subcontractor or an authorized representative of the Subcontractor. The term "Subcontractor" does not include a separate contractor or subcontractors of a separate contractor.
73. Substantial Completion: The Work (or a specified part thereof) has progressed to the point where, in the opinion of Owner as evidenced by a Certificate of Substantial Completion, the Work is sufficiently complete, in accordance with Contract Documents, so that the Work (or specified part) can be utilized for the purposes for which it is

intended; or if no such certificate is issued, when the Work (or specified part) is complete and ready for final payment as evidenced by written recommendation of Owner for final payment. The terms "Substantially Complete" and "Substantially Completed" as applied to all or part of the Work refer to Substantial Completion thereof.

74. Superintendence: Executive oversight and charge of the main aspects of construction, including scheduling, sequence of subcontractor Work, and quality control.
75. Supplemental Instruction: A written directive from Owner to Contractor ordering alterations or Modifications that do not result in change in Contract Sum or Contract Time, and do not substantially change Drawings or Specifications. See Section 01250 (Modification Procedures).
76. Testing and special inspection agency: An independent entity engaged by Owner to inspect and/or test the workmanship, materials, or manner of construction of buildings or portions of buildings, to determine if such construction complies with the Contract Documents and applicable codes.
77. Underground Facilities: All pipelines, conduits, ducts, cables, wires, manholes, vaults, tanks, tunnels or other such facilities or attachments, and any encasements containing such facilities that have been installed underground to furnish any of the following services or materials: Electricity, gases, chemicals, steam, liquid petroleum products, telephone or other communications, cable television, sewage and drainage removal, traffic or other control systems, or water.
78. Unit Price Work: Shall be the portions of the Work for which a unit price is provided in Document 00520 (Agreement) or Section 01100 (Summary).
79. Work: The entire completed construction, or the various separately identifiable parts thereof, required to be furnished under the Contract Documents within the Contract Time. Work includes and is the result of performing or furnishing labor and furnishing and incorporating materials and equipment into the construction, and performing or furnishing services and furnishing documents, all as required by the Contract Documents including everything shown in the Drawings and set forth in the Specifications. Wherever the word "work" is used, rather than the word "Work," it shall be understood to have its ordinary and customary meaning.

## PART 2 PRODUCTS – NOT USED

## PART 3 EXECUTION – NOT USED

END OF SECTION

SECTION 01450

# QUALITY CONTROL

## PART 1 GENERAL

### 1.1 SECTION INCLUDES

A. Contractor's Quality Control
B. Quality of the Work
C. Inspections and Tests by Governing Authorities
D. Inspections and Tests by Serving Utilities
E. Inspections and Tests by Manufacturer's Representatives
F. Tests and Inspections by Owner or Owner's Independent Testing and Inspection Agency
G. Additional Testing and Inspection

### 1.2 CONTRACTOR'S QUALITY CONTROL

A. Contractor's Quality Control: Ensure that products, services, workmanship, and Site conditions comply with requirements of Drawings and Specifications by coordinating, supervising, testing, and inspecting the Work and by utilizing only suitably qualified and appropriately audited, licensed, or trained personnel.
B. Quality Requirements: Work shall be accomplished in accordance with quality requirements of Drawings and Specifications, including, by reference, all codes, laws, rules, regulations, and standards. When no quality basis is prescribed, the quality and testing procedures shall be in accordance with the best-accepted practices of the construction industry for the locale of the Project, for projects of this type, or standards set by engineering or technical societies (e.g., ASTM or ASHRAE), whichever is more stringent.
C. Quality Control Personnel: Employ and assign knowledgeable and skilled personnel as necessary to perform quality control functions to ensure that the Work is provided as required.
D. At Contractor's expense, Contractor may employ a certified independent testing agency to perform compaction tests where there is disagreement. Owner may consider such tests, but will have the authority to make the final determination of relative compaction.
E. At Contractor's expense, Contractor may employ a certified independent welding inspection agency to perform welding inspections. Owner may consider such tests, but will have the authority to make the final determination of welding quality.

### 1.3 QUALITY OF THE WORK

A. Quality of Products: Unless otherwise indicated or specified, all products shall be new, free of defects, and fit for the intended use.
B. Quality of Installation: All Work shall be produced plumb, level, square and true, or true to indicated angle, and with proper alignment and relationship between the various elements, as indicated or required by Contract Documents.
C. Protection of Completed Work: Take all measures necessary to preserve completed Work free from damage, deterioration, soiling, and staining, until acceptance by Owner.
D. Standards and Code Compliance and Manufacturer's Instructions and Recommendations: Unless more stringent requirements are indicated or specified, comply with manufacturer's instructions and recommendations, reference standards and building code research report

requirements in preparing, fabricating, erecting, installing, applying, connecting, and finishing Work.

E. Deviations from Standards and Code Compliance and Manufacturer's Instructions and Recommendations: Secure Owner's advance written consent. Document and explain all deviations from reference standards and building code research report requirements and manufacturer's product installation instructions and recommendations, including acknowledgement by the manufacturer that such deviations are acceptable and appropriate for the Project.

F. Verification of Quality: Work shall be subject to verification of quality by Owner in accordance with provisions of the Contract Documents.
   1. Cooperate by making Work available for inspection.
   2. Such verification may include mill, plant, shop, or field inspection as required.
   3. Provide access to all parts of the Work, including plants where materials or equipment are manufactured or fabricated.
   4. Provide all information and assistance as required, including that by and from subcontractors, fabricators, materials suppliers and manufacturers, for verification of quality by Owner.
   5. Applicable provisions of the Contract Documents shall govern Contract Modifications, if any, resulting from such verification activities.

G. Observations by Owner's Consultants: Periodic and occasional observations of Work in progress will be made by Owner and Owner's consultants as deemed necessary to review progress of Work and general conformance with design intent.

H. Limitations on Inspection, Test, and Observation: Neither employment of independent testing and inspection agency nor observations or tests by Owner and Owner's consultants shall in any manner relieve Contractor of obligation to perform Work in full conformance to all requirements of Contract Documents.

I. Owner's Acceptance and Rejection of Work: Owner reserves the right to reject all Work not in conformance with the requirements of the Drawings and Specifications, or otherwise Defective.

J. Correction of Defective Work: Defective Work shall be modified, replaced, repaired or redone by the Contractor at no change in Contract Sum or Contract Time.

K. Acceptance of Defective Work: Acceptance of Defective Work, without specific written acknowledgement and approval of Owner, shall not relieve the Contractor of the obligation to correct such Work.

L. Contract Adjustment for Defective Work: Should Owner determine that it is not feasible or in Owner's interest to require Defective Work to be repaired or replaced, an equitable reduction in Contract Sum shall be made by agreement between Owner and Contractor. If equitable amount cannot be agreed upon, a Construction Change Directive will be issued and the amount in dispute resolved in accordance with applicable provisions of Document 00700 (General Conditions).

M. Non-Responsibility for Defective Work: Owner and Owner's consultants disclaim any and all responsibility for Work produced not in conformance with the Drawings and Specifications.

N. Responsibility for Defective Work: Contractor shall have full responsibility for all consequences resulting from Defective Work, including without limitation all delays, disruptions, extra inspection and correction costs by Contractor and Owner and re-Work, and extra time and costs of all types. Contractor waives excuses for Defective Work relating

to Owner's prior review of Submittals and/or prior failure to notice Defective Work in place on inspection.

## 1.4 INSPECTIONS AND TESTS BY GOVERNING AUTHORITIES

A. Regulatory Requirements for Testing and Inspection: Comply with CBC requirements and all other requirements of governing authorities having jurisdiction.
B. Inspections and Tests by Governing Authorities: Cause all tests and inspections required by governing authorities having jurisdiction to be made for Work under this Contract.
   1. Such authorities may include, but are not limited to PRMD, Fire Department, and similar agencies.
   2. Except as specifically noted, scheduling, conducting and paying for such inspections shall be solely the Contractor's responsibility.

## 1.5 INSPECTIONS AND TESTS BY SERVING UTILITIES

A. Inspections and Tests by Serving Utilities: Cause all tests and inspections required by serving utilities to be made for Work under this Contract. Scheduling, conducting, and paying for such inspections shall be solely the Contractor's responsibility.

## 1.6 INSPECTIONS AND TESTS BY MANUFACTURER'S REPRESENTATIVES

A. Inspections and Tests by Manufacturer's Representatives: Cause all tests and inspections specified to be conducted by materials or systems manufacturers to be made. Additionally, all tests and inspections required by materials or systems manufacturers as conditions of warranty or certification of Work shall be made, the cost of which shall be included in the Contract Sum.

## 1.7 TESTS AND INSPECTIONS BY OWNER OR OWNER'S INDEPENDENT TESTING AND INSPECTION AGENCY

A. Owner may conduct or Owner may select an independent testing and inspection agency or agencies to conduct tests and inspections as indicated on Drawings, in Specifications, and as required by governing authorities having jurisdiction.
B. Responsibility for payment for such tests and inspections shall be as indicated in paragraph 1.7D below. All time and costs for Contractor's service related to such tests and inspections shall be included in Contract Time and Contract Sum.
C. Contractor shall pay for all additional charges by testing and inspection agencies and governing authorities having jurisdiction due to the following:
   1. Contractor's failure to properly schedule or notify testing and inspection agency or authorities having jurisdiction.
   2. Changes in sources, lots, or suppliers of products after original tests or inspections.
   3. Changes in means, methods, techniques, sequences, and procedures of construction that necessitate additional testing, inspection, and related services.
   4. Changes in mix designs for concrete and mortar after review and acceptance of submitted mix design.
   5. Contractor-submitted requests to change materials or products, which are accepted, but require testing and/or reinspection beyond original design.
D. In addition to tests to be performed by Contractor (and to be paid by Contractor) as required elsewhere in Contract Documents, tests and special inspections that may be performed by Owner or Owner's independent testing and inspection agency or agencies and paid by Owner include, but are not limited to, the following:

| SECTION | TESTS |
|---|---|
| 02315 | Granular bedding material: in-place density, moisture, sand equivalent, resistance (R-value), gradation, size, percent crushed rock |
| " | CDF compression tests |

E. Owner may perform tests at any time at its discretion.

F. California Test Method No. 216 (Relative Compaction of Untreated and Treated Soils and Aggregates) and 231 (Relative Compaction of Untreated/Treated Soils and Aggregates [Area Concept Utilizing Nuclear Gauges]) shall be modified as follows:
   1. In lieu of the specified 10-pound hammer, a Test Lab Model No. F-590 Mechanical Compactor (or equal) with a 10-pound hammer will be used.
   2. In lieu of the specified split cylindrical mold, a non-split cylindrical mold of the same diameter and wall thickness will be used.
   3. Any of the provisions of Test Method No. 216 which conflict with the use of such equipment described in (1) and (2) are considered void to the extent they preclude the use of such equipment.
   4. In lieu of the specified test form, an Owner standard form will be used.
   5. Correction for oversize material may be obtained from a table based upon the given equations and the coefficient for +3/4-inch aggregate will be computed from the following formulae:

      $Y = 1.0$ for $P = 10$ to $20$
      $Y = 1.0 - .002 (P - 20)$ for $P = 20$ to $50$

      where:

      Y = coefficient for 3/4" aggregate
      P = percent retained on 3/4" screen

   6. In-place density and relative compaction will be determined on the basis of individual test sites in lieu of the area concept.

G. Test and Inspection Reports: After each inspection and test by an independent testing and inspection agency or agencies, one copy of report shall be promptly submitted to Owner, who will distribute copies to Contractor and any agency having jurisdiction (if required by Code).
   1. Reports shall clearly identify the following:
      a. Date issued.
      b. Project name and number.
      c. Identification of product and Specifications Section in which Work is specified.
      d. Name of inspector.
      e. Date and time of sampling or inspection.
      f. Location in Project where sampling or inspection was conducted.
      g. Type of inspection or test.
      h. Date of test.
      i. Results of tests.
      j. Comments concerning conformance with Contract Documents and other requirements.
   2. Test reports shall indicate specified or required values and shall include statement whether test results indicate satisfactory performance of products.
   3. Samples taken but not tested shall be reported.

4. Test reports shall confirm that methods used for sampling and testing conform to specified test procedures.
5. When requested, testing and inspection agency shall provide interpretations of test results.

H. Contractor Responsibilities for Inspections and Tests:
1. Unless specified otherwise, notify Owner and testing agency 72 hours in advance of expected time of each test and inspection, and for all other operations requiring inspection and testing services, by submitting Contractor's inspection request in writing (or, if Owner provides a specific form, on that form).
   a. When tests or inspections cannot be performed after such notice, due to Contractor's negligence, reimburse Owner for testing and inspection agency personnel and travel expenses incurred.
2. Deliver to laboratory or designated location, adequate samples of materials proposed to be used that require advance testing, together with proposed mix designs.
3. Cooperate with testing and inspection agency personnel, Owner, and Owner's consultants. Provide access to Work areas and off-Site fabrication and assembly locations, including during weekends and after normal Work hours.
4. Provide incidental labor and facilities to provide safe access to Work to be tested and inspected, to obtain and handle Samples at the Site or at source of products to be tested, and to store and cure test Samples.
5. Provide, at least 15 Days in advance of first test or inspection of each type, a schedule of tests or inspections indicating types of tests or inspections and their scheduled dates.

## 1.8 ADDITIONAL TESTING AND INSPECTION

A. If initial tests or inspections made by Owner or the testing and inspection agency reveal that materials do not comply with Contract Documents, or if Owner has reasonable doubt that materials do not comply with Contract Documents, additional tests and inspections shall be made as directed.
1. If additional tests and inspections establish that materials comply with Contract Documents, Owner shall pay all costs for such tests and inspections.
2. If additional tests and inspections establish that materials do not comply with Contract Documents, all costs of such tests and inspections shall be deducted from Contract Sum.
3. If Work requiring inspection is covered by follow-on or follow-up Work before it is inspected, uncover Work so proper inspections can be performed. All costs of such tests and inspections shall be deducted from Contract Sum.

# PART 2 PRODUCTS – NOT USED

# PART 3 EXECUTION – NOT USED

END OF SECTION

SECTION 01500

# TEMPORARY FACILITIES AND CONTROLS

## PART 1 GENERAL

### 1.1 SUMMARY

A. Section Includes:
1. Temporary Electricity
2. Temporary Telephone
3. Temporary Water
4. Temporary Sanitary Facilities
5. Temporary Barriers and Enclosures
6. Tree and Plant Protection
7. Water Control
8. Noise Control
9. Traffic Control
10. Project Identification Signs
11. Storm Water Pollution Prevention Plan
12. Equipment and Vehicle Maintenance
13. Removal of Temporary Facilities and Controls

### 1.2 DEFINITIONS

A. Dripline: The area on the ground from the trunk of any tree to the point directly below the outermost tips of the foliage of that tree.

B. Tree Damage: Tree damage shall include, but not be limited to, the following: significant injury to the root system or other parts of a tree including burning, application of toxic substances, damaging through contact with equipment or machinery, changing the natural grade within the Dripline, compacting the soil within the Dripline, interfering with the normal water requirements of the tree, unauthorized trenching or excavating within the Dripline, or unauthorized removal of more than 1/3 of the live wood, foliage, or roots.

C. Sensitive Receptors: Residents and visitors to the baseball field and park.

### 1.3 SUBMITTALS

A. Product Data:
1. Project identification sign, including layout drawing and placement
2. Traffic Control Plan

### 1.4 TEMPORARY ELECTRICITY

A. Provide, maintain, and pay for electrical power at the Site for construction purposes.

### 1.5 TEMPORARY TELEPHONE

A. Provide, maintain, and pay for telephone service to field office at time of Project mobilization.

### 1.6 TEMPORARY WATER

A. Provide, maintain, and pay for suitable quality water service required for construction operations.

B. Contractor may be able to make separate arrangements for water service with Valley of the Moon Water District.

## 1.7 TEMPORARY SANITARY FACILITIES

A. Provide and maintain required temporary buildings with sanitary toilets for use of all workers.
B. Comply with all minimum requirements of the Health Department or other public agency having jurisdiction; maintain in a sanitary condition at all times.

## 1.8 TEMPORARY BARRIERS AND ENCLOSURES

A. Provide barriers to prevent unauthorized entry to construction areas, to allow for Owner's use of Site, and to protect existing facilities and adjacent properties from damage from construction operations.
B. Provide barricades required by governing authorities to control public access to existing buildings.
C. Protect vehicular traffic, stored materials, Site, and structures from damage.
D. For activities that last more than one Day, materials or equipment left on the Site overnight will be stored as inconspicuously as possible, and will be neatly arranged.

## 1.9 TREE AND PLANT PROTECTION

A. Root protection:
   1. No storage of materials or equipment will be allowed within the Dripline.
   2. Place 6-inch layer of mulch (wood chips or bark) over areas under the Dripline to prevent soil compaction.
   3. Install exclusion fencing around Dripline of all trees to create buffer zones when Work is required under Dripline of existing trees.
   4. Whenever possible, excavation shall be on a radial line, diverging from the tree trunk.
B. Protect existing trees and other vegetation to remain against damage.
   1. Do not smother trees by stockpiling construction materials or excavated materials within drip line.
   2. Avoid foot or vehicular traffic or parking of vehicles within drip line.
   3. Provide temporary protection as required.
   4. Limb Protection: Use small construction equipment as necessary to minimize removal of or avoid damage to overhanging tree branches. Perform limb removal only when directed by Owner. Perform pruning or limb removal, if authorized, in accordance with ANSI A300. Owner will provide a copy of the guidelines upon request. "Heading" of any tree will not be permitted.
   5. Do not wear climbing spurs when performing Work on any tree, unless the tree has been approved for removal.
C. Exposure to harmful substances: No storage or dumping of any substances that may cause minimal Tree Damage shall occur at any location on the Site.
D. Where construction is to be performed in the vicinity of trees and shrubbery, the Work shall be carried on in a manner that will cause minimum Tree Damage. Owner will designate trees that are to be removed. Under no circumstances are additional trees to be removed without written permission from Owner. Trees and shrubbery that are not to be removed shall be protected from injury or damage resulting from Contractor's operations.
E. Limb Protection: Use small construction equipment as necessary to minimize removal of or avoid damage to overhanging tree branches. Remove limbs only when directed by Owner.

Prune or remove limbs, if authorized, in accordance with ANSI A300. Owner will provide a copy of the guidelines upon request. "Heading" of any tree will not be permitted.

F. All damage shall be immediately reported to Owner, who will file a report so that remedies may be determined.
G. For any tree that is removed without Owner's permission or is irreparably damaged, in the opinion of Owner, Owner may elect to pursue any of the following remedies in its sole discretion:
   1. Require Contractor to repair by pruning, if possible, or replace trees not intended for removal. Whether or not a tree can be repaired by pruning will be determined by Owner. Subsequent pruning, if appropriate, shall be conducted by a Certified Arborist at Contractor's expense.
   2. Require Contractor to remove trees that cannot be repaired by pruning, and replace with new trees of minimum 4 inch caliper.
H. Assess money damages in the amount of $27.00 per square inch of cross section, measured at 4 ½ feet above ground, but not less than $250.00, which damages shall be deducted from monies due or to become due under the Contract. If tree protection is not performed or is not performed adequately, and Owner determines that a tree has been irreparably damaged, Owner may assess the same damages as for unauthorized removal of a tree.
I. Upon completion of Project, vertical mulching shall occur within the Dripline of affected trees in specific areas mentioned in the Arborist Survey to improve flow of nutrients, water, and restore pore space in the soils.
J. Trees identified in specific areas along the proposed access and maintenance road may require pruning activities that would be conducted by a certified arborist.

## 1.10 WATER CONTROL

A. See Section 02240 (Dewatering) and Section 02116 (Groundwater Disposal) for information on water control.
B. Grade Site to drain unless otherwise indicated or specified.
C. Maintain excavations free of water.
D. Protect Site from puddling or running water.
E. Provide water barriers as required to protect Site from soil erosion.

## 1.11 NOISE CONTROL

A. When required by OSHA Standards, construction workers shall be provided with ear protection to operate equipment.
B. Ensure that equipment and vehicles used for the Work are equipped with the best available noise control techniques, including properly installed engine mufflers, improved mufflers, equipment redesign, use of intake silencers, ducts, engine enclosures and acoustically attenuating shields or shrouds, where applicable.
C. Inspect machinery and equipment daily for any problems that may contribute to increased noise levels and unsafe practices.
D. Minimize equipment noise during construction by muffling and shielding intakes and exhaust on equipment (per the manufacturer's specifications), and by shrouding or shielding impact tools. No equipment shall be operated with an unmuffled exhaust.
E. Install temporary noise damper barriers/enclosures/structures (e.g. plywood with sound absorbing materials, sandbags or other materials) around noisy equipment and ramming and jack pits to minimize noise.
F. Locate fixed equipment (such as compressors and generators) and construction staging areas as far as feasible from nearby Sensitive Receptors.

## 1.12 TRAFFIC CONTROL

A. Notification:
   1. At least 7 Days prior to commencement of Work, notify residents along the Project roadways, in writing, that traffic flows will be subject to detours and/or delays, and that access to individual driveways may be disrupted during working hours. Provide notice to Owner.
   2. At least 7 Days prior to commencement of Work, post the Project area to inform drivers of impending construction Work and likely delays and detours.
   3. Notify the property occupants, in writing, at least 3 Days in advance of the trenching across property occupants' driveways. Provide notice to Owner.
   4. Coordinate vehicular access with Freedom Hawk Private Security (707-992-0508), Sonoma County Transit, police, fire, garbage, and USPS at least 5 Business Days prior to commencement of Work, except 10 Business Days prior to street closure.
   5. If any applicable permits require Contractor to notify residents or any organization of traffic detours or delays, provide such notice(s) to Owner.

B. Traffic Control Measures:
   1. Traffic control and safety precautions shall conform with the "California Manual on Uniform Traffic Control Devices," provisions of the County of Sonoma encroachment permit, and these Specifications.
   2. Pay for all costs for traffic signage, including flagging.
   3. Provide safe passage for vehicular and pedestrian traffic through the Work at all times.
   4. Traffic on two-lane streets may be reduced to one lane provided that, with all restriction of traffic flow, flaggers, cones, signs, and barricades are furnished as required by Owner. Permit the traffic equal flow time in each direction.
   5. Maintain access to public and private buildings, businesses and driveways. Provide approved metal "bridge" or temporary backfill for access when and where required within ½ hour after request by Owner except that emergency vehicles and personnel shall be provided immediate access at all times.
   6. Restore access to all residences for all non-working hours, holidays, and weekends.

C. Maintain traffic control measures:
   1. Maintain traffic control through the Site and provide local access as specified herein regardless of rain or other causes, either within or beyond the control of Contractor, that may force suspension or delay of the Work. At all times keep on the Site such materials, labor forces, and equipment as may be necessary to keep the streets and driveways within the Site open to traffic and in good repair. Expedite the passage of such traffic, using such labor forces and equipment as may be necessary.

## 1.13 PROJECT IDENTIFICATION SIGNS

A. General:
   1. Provide Project identification signs as specified herein and as indicated.
   2. Quality Assurance: Project identification signs shall be prepared by a professional sign painter.
   3. Lettering: Helvetica medium, of the sizes and wording indicated.
   4. No other signs are allowed without Owner's permission except those required by law.

B. Products:
   1. Posts: Rough No. 2 Douglas fir or better; size as indicated.
   2. Face of signs: Douglas fir exterior plywood, grade A/C-X or better.
   3. Finishes:

a. Paint all sides of posts with one coat of primer.
b. Paint both sides of the plywood with one coat of primer.
c. Paint the front of the signs with two additional coats of paint.
d. Primer: White exterior latex primer, such as Multi-Purpose Latex Primer (023), as manufactured by Benjamin Moore Paints, or Approved Equal.
e. Paint: Flat white exterior latex paint, such as Regal Select Exterior Paint - MoorLife Flat Finish (105), as manufactured by Benjamin Moore Paints, or Approved Equal.
f. Lettering: Soft gloss black exterior latex paint, such as MoorGlo Soft Gloss (N096) Black (80), as manufactured by Benjamin Moore Paints, or Approved Equal.

C. Execution:
1. Placement of signs:
a. Place Project identification sign in a prominent location on the Project Site at a location approved by Owner. Locations of Project identification signs as indicated are approximate only. Owner will approve exact locations of signs.
b. Place signs before any other construction commences.
c. Embed posts into the ground as indicated in holes backfilled with clean, dry sand compacted to 95 percent relative compaction by jetting or ponding.
d. Center posts on the backside of the signs.
e. Secure plywood to each post with 8 evenly spaced 16d galvanized nails.

D. Removal of signs:
1. Remove and dispose of signs Off Site after Final Acceptance.

## 1.14 STORM WATER POLLUTION PREVENTION PLAN

A. Prior to commencement of Work at the Site, obtain Owner approval on a Storm Water Pollution Prevention Plan (SWPPP) prepared in accordance with:
1. The Caltrans Storm Water Quality Handbooks:
a. Storm Water Pollution Prevention Plan (SWPPP) and Water Pollution Control Program (WPCP) Preparation Manual; and
b. Construction Site Best Management Practices (BMPs) Manual.
2. State Water Resources Control Board (SWRCB), Order No. –2009-0009 – DWQ, National Pollutant Discharge Elimination System (NPDES), General Permit for Storm Water Discharges Associated with Construction and Land Disturbance Activities (Construction General Permit). The permit is available at Owner's office or is available online at: http://www.swrcb.ca.gov/water_issues/programs/stormwater/constpermits.shtml. The requirements of this order replace and supersede State Water Board Orders No 99-08-DWQ and 2003-0007-DWQ.

B. Develop and implement a monitoring program in accordance with the requirements of the General Permit to verify compliance with the General Permit.

C. Submit SWPPP to Owner for review in accordance with Section 01330 (Submittal Procedures). Provide the SWPPP to Owner prior to commencement of Work at the Site.

D. The SWPPP shall include all of the requirements in paragraphs 1.14A, 1.14B, and 1.14C of this Section 01500. Particular attention shall be paid to:
1. Site Map
2. Locations of all equipment and materials storage
3. Location and containment for fueling area, construction entrances, and concrete washouts
4. Locations of all other staging areas, stockpile areas, and disposal sites.
5. Location of sanitation facilities

6. All erosion and sediment control BMPs, as well as non-storm water BMPs
7. Dewatering plan

E. Water Pollution Control Drawings shall be of sufficient size and scale to detail BMP locations. Remove all extraneous information from the base sheets to improve clarity, including geometric equations, notes, details, and all data not related to water pollution control work. Use a copy of the appropriate Drawing(s) as a base sheet(s) with the pertinent stage of construction drawn in as an overlay to accurately reflect Site conditions at various phases of construction. Provide enlarged detail mapping as necessary to detail BMP locations.

F. Revise and update the SWPPP whenever there is a change in construction operations that may affect the Site drainage patterns or discharge of pollutants to surface waters, groundwaters, or a separate municipal storm sewer system.

G. Failure to fully comply with these requirements shall subject Contractor to all fines, damages, and job delays incurred due to failure to implement the SWPPP.

H. Keep a copy of the General Permit, together with updates and revisions at the Site.

I. Furnish SWPPP to Owner upon Owner's request.

## 1.15 EQUIPMENT AND VEHICLE MAINTENANCE

A. Keep all vehicles and equipment clean. Avoid excessive build-up of oil or grease.

B. Inspect all equipment used in the creek channel for leaks each day prior to initiation of Work. Take action to prevent or repair leaks, if necessary.

C. Conduct vehicle and equipment maintenance activities Off Site, or in a designated, protected area away from the channel where vehicle fluids and spills can be handled with reduced risk to water quality.

D. If maintenance must occur on-Site, designated areas shall not directly connect to the ground, surface waters, or the storm drainage system to prevent the run-on of stormwater and runoff of spills. The service area shall be clearly designated with berms, sandbags, or other barriers.

E. Use secondary containment, such as a drain pan or drop cloth, to catch spills or leaks when removing or changing fluids. Store fluids in appropriate containers with covers, and properly recycle or dispose of them off-site.

F. Store cracked batteries in a non-leaking secondary container and remove from the Site.

G. Stockpile spill clean-up materials where they are readily accessible.

H. Check incoming vehicles and equipment for leaking oil and fluids (including delivery trucks, and employee and subcontractor vehicles). Leaking vehicles or equipment shall not be allowed on-Site.

## 1.16 REMOVAL OF TEMPORARY FACILITIES AND CONTROLS

A. Remove temporary utilities, equipment, facilities, and materials prior to final inspection.

B. Remove underground installations to a minimum depth of 2 feet.

C. Clean and repair damage caused by installation or use of temporary Work.

D. Restore existing facilities used during construction to original condition. Restore permanent facilities used during construction to specified condition.

## PART 2 PRODUCTS – NOT USED

## PART 3 EXECUTION – NOT USED

END OF SECTION

SECTION 01540

# SITE SECURITY AND SAFETY

## PART 1 GENERAL

### 1.1 SUBMITTALS

A. Safety Program.
B. Fire Protection Plan.

### 1.2 PROTECTION

A. Continuously maintain protection as necessary to protect the Work, as a whole and in part, and adjacent property and improvements from accidents, injuries or damage.
B. Properly protect the Work:
   1. With lights, guard rails, temporary covers and barricades.
   2. Enclose excavations with proper barricades.
   3. Brace and secure all parts of the Work against storm and accident.
   4. Provide such additional forms of protection that may be necessary under existing circumstances.
C. Provide and maintain in good condition all protective measures required to adequately protect the public from hazards resulting from the Work and to exclude unauthorized persons from the Work. When regulated by Building Code, Cal OSHA, or other authority, such legal requirements for protection shall be considered as minimum requirements. Be responsible for the protection in excess of such minimum requirements as required.

### 1.3 CONTROL OF SITE

A. Ensure that no alcohol, firearms, weapons, or controlled substance enters or is used at the Site. Immediately remove from the Site and terminate the employment of any employee found in violation of this provision.

### 1.4 SAFETY PROGRAM

A. Prior to starting any Work at the Site, submit a Safety Program that has been reviewed and approved by an Industrial Hygienist certified by the American Board of Industrial Hygiene or by a Certified Safety Professional. The Safety Program shall include the name, certification number, and certification seal of the Industrial Hygienist or Certified Safety Professional. Comply with the Safety Program and all applicable federal, state, and local regulation codes, rules, law and ordinances.
B. Receipt and/or review of the Safety Program by Owner, Engineer or Owner's Representative shall not relieve Contractor of any responsibility for complying with all applicable safety regulations.
C. It is essential that Contractor and each Subcontractor implement an effective and vigorous Safety and Health Program to cover their respective portions of the Work. Subject to Contractor's overall responsibility for Project safety, it shall be understood that the full responsibility for providing a safe place to work with respect to their respective portions of the Work rests with each individual Contractor and Subcontractor.

D. Safety Program components:
   1. Injury and Illness Prevention Program (IIPP): Conforming to the General Industrial Safety Orders (CCR Title 8, Division 1, Chapter 4, Subchapter 7, Section 3203), and the California Labor Code (Section 6401.7).
   2. Site-Specific Safety and Health Plan (SSHP): Describing health and safety procedures that shall be implemented during the Work in order to ensure safety of the public and those performing the Work. Follow the guidelines for a SSHP listed in CCR Title 8, Division 1, Chapter 4, Subchapter 7, Section 5192, Item (b)(4) f.
   3. Confined Space Program:
      a. The Site contains permit- and non-permit-confined spaces. Owner will provide Contractor with any available information regarding existing permit space hazards, entry operations, and safety information relating to Work in the existing permit spaces as set forth in the General Industrial Safety Orders (CCR Title 8, Division 1, Chapter 4, Subchapter 7, Section 5157).
      b. Permit space entry is allowed only through compliance with a permit space program meeting the requirements of Section 5157 of the General Industrial Safety Orders. During entry operations, or at the conclusion of entry operations, verbally notify Owner of the permit space program followed and of any hazards confronted or created in permit spaces during entry operations.

E. The wearing of hard hats shall be mandatory at all times for personnel on Site. Supply sufficient hard hats to equip properly all employees and visitors.

F. Whenever an exposure exists, appropriate personal protective equipment (PPE) shall be used by all affected personnel. Supply PPE to all personnel under Contractor's direction.

## 1.5 SAFETY REQUIREMENTS

A. Standards: Maintain the Project in accordance with state and local safety and insurance standards.

B. Hazards Control:
   1. Store volatile wastes in covered metal containers and remove from premises daily.
   2. Prevent accumulation of wastes that create hazardous conditions.
   3. Provide adequate ventilation during use of volatile or noxious substances.

C. Conduct cleaning and disposal operations to comply with local ordinances and anti-pollution laws.
   1. Do not burn or bury rubbish or waste material on the Site.
   2. Do not dispose of volatile wastes such as mineral spirits, oil, or paint thinner in storm or sanitary drains.
   3. Do not dispose of wastes into streams or waterways.

D. Provide accident information on the forms provided by Contractor. This information shall be provided on the same Day as the occurrence of said incident.

## 1.6 SITE SAFETY OFFICER

A. Designate one of Contractor's staff as "Site Safety Officer" whose duties shall include the responsibility for enforcing the environmental protection provisions of the Contract Documents including safety and health, the requirements of the Occupational Safety and Health Act, and other applicable federal, state and local standards. Submit for review by Owner Contractor's intended traffic flow plan, security plan, program for temporary structures, housecleaning plan, demolition program, and environmental safety and health plan. After review by Owner, the implementation and enforcement of these plans shall

become the responsibility of the Site Safety Officer. Any changes in the plans shall be requested by Contractor through the Site Safety Officer for written concurrence by Owner.

B. Owner's risk management representative(s) shall be allowed access to accident/injury and illness reports, inspection reports, scheduling and construction meetings, and safety meetings.

### 1.7 FIRE PROTECTION PLAN

A. Prior to starting any Work at the Site, submit a fire protection plan that has been reviewed and approved by the Schell-Vista Fire Department. It is recommended that the plan include, but not be limited to, a discussion of the following items:
   1. Equipment spark arresters
   2. Fire-extinguishing equipment on hand
   3. Method of operation in case of fire
   4. Notification to authorities of any fire
   5. Access available during performance of Work
   6. Educating workers of fire protection plan
   7. Storage protection for flammable materials

## PART 2 PRODUCTS - NOT USED

## PART 3 EXECUTION - NOT USED

END OF SECTION

SECTION 01600

# PRODUCT REQUIREMENTS

## PART 1 GENERAL

### 1.1 SECTION INCLUDES

A. Products
B. Product Options and Substitutions
C. Product Delivery Requirements
D. Product Storage and Handling

### 1.2 PRODUCTS

A. Products: New material, machinery, components, equipment, fixtures, and systems forming the Work. Does not include machinery and equipment used for preparation, fabrication, conveying, and erection of the Work. Products may also include existing materials or components required for reuse.
B. Do not use materials and equipment removed from existing premises, except as specifically permitted by the Contract Documents.
C. For similar components, provide interchangeable components of the same manufacturer.

### 1.3 PRODUCT OPTIONS AND SUBSTITUTIONS

A. Summary:
   1. This paragraph 1.3 describes procedures for selecting products and requesting substitutions of unlisted materials in lieu of materials named in the Specifications or approved for use in Addenda that were not already the subject of a Document 00660 (Substitution Request Form) submittal as provided in Document 00200 (Instructions to Bidders).
B. For products specified by naming one manufacturer only, Owner believes that the manufacturer listed is capable of producing equipment or products that will satisfy the requirements of the associated Specification. This statement, however, shall not be construed as an endorsement of a particular manufacturer's product, nor shall it be construed that a named manufacturer's standard product will comply with the requirements of the associated Specification. In such cases, the Owner is not aware of an equal manufacturer.
C. Contractor's Options:
   1. For products specified only by reference standard: Select any product meeting that standard.
   2. For products specified by naming one or more products or manufacturers:
      a. Select products of any named manufacturer meeting Specifications.
      b. If product becomes unavailable due to no fault of Contractor or if the product specified no longer complies with local regulations or laws, submit Request for Substitution (RFS), including all information contained in this Section 01600 and a fully executed Document 00660 (Substitution Request Form), but using the term "Contractor" each place the term "Bidder" appears in that form.
D. Substitutions:
   1. Except as provided in Document 00200 (Instructions to Bidders) with respect to "or Approved Equal" items, Owner will consider Contractor's substitution requests only

when product becomes unavailable due to no fault of Contractor or if the product specified no longer complies with local regulations or laws. Requests for review of proposed substitute items will not be accepted from anyone other than Contractor. The RFS shall state the extent, if any, to which the evaluation and acceptance of the proposed substitute will prejudice Contractor's achievement of Substantial Completion on time, and whether or not acceptance of the substitute for use in the Work will require a change in any of the Contract Documents (or in the provisions of any other direct contract with Owner for work on the Project).

2. Submit separate RFS for each product and support each request with:
   a. Product identification.
   b. Manufacturer's literature.
   c. Samples, as applicable.
   d. Name and address of similar projects on which product has been used, and dates of installation.
   e. Name, address, and telephone number of manufacturer's representative or sales engineer.
   f. For construction methods: Detailed description of proposed method; drawings illustrating methods.
3. Where required, itemize a comparison of the proposed substitution with product specified and list significant variations including, but not limited to dimensions, weights, service requirements, and functional differences. If variation from product specified is not pointed out in submittal, variation will be rejected even though submittal was favorably reviewed. Identify all variations of the proposed substitute from that specified in the RFS and indicate available maintenance, repair, and replacement service.
4. State whether the substitute will require a change in any of the Contract Documents (or provisions of any other direct contract with Owner for work on the Project) to adapt the design of the proposed substitute, and whether or not incorporation or use of the substitute in connection with Work is subject to payment of any license fee or royalty. Submit data relating to changes in construction schedule.
5. Include accurate cost data comparing proposed substitution with product and amount of net change in Contract Sum including, but not limited to, an itemized estimate of all costs or credits that will result directly or indirectly from acceptance of such substitute, including costs of redesign and claims of other contractors affected by the resulting change, all of which will be considered by Owner in evaluating the proposed substitute. Owner may require Contractor to furnish additional data about the proposed substitute.
6. Owner will not consider substitutions for acceptance (or, in Owner's sole discretion, Owner may make Contractor solely responsible for all resulting costs, expenses and other consequences) when a substitution:
   a. Results in delay meeting construction Milestones or completion dates.
   b. Is indicated or implied on submittals without formal request from Contractor.
   c. Is requested directly by Subcontractor or supplier.
   d. Acceptance will require substantial revision of Contract Documents.
   e. Disrupts Contractor's job rhythm or ability to perform efficiently.
7. Substitute products shall not be ordered without written acceptance of Owner.
8. Owner will determine acceptability of proposed substitutions and reserve right to reject proposals due to insufficient information.

9. Accepted substitutions will be evidenced by a Change Order or a CCD. All Contract Document requirements apply to Work involving substitutions.

E. Contractor's Representation and Warranty:
1. Contractor's RFS constitutes a representation and warranty that Contractor:
a. Has investigated proposed product and determined that it meets or exceeds, in all respects, specified product.
b. Will provide the same warranty for substitution as for specified product.
c. Will coordinate installation and make other changes that may be required for Work to be complete in all respects.
d. Waives claims for additional costs which may subsequently become apparent.
e. Will compensate Owner for additional redesign costs associated with substitution.
f. Will be responsible for Construction Schedule slippage due to substitution.
g. Will be responsible for Construction Schedule delay due to late ordering of available specified products caused by requests for substitution that are subsequently rejected by Owner.
h. Will compensate Owner for all costs; including extra costs of performing Work under Contract Documents, extra cost to other contractors, and any claims brought against Owner, caused by late requests for substitutions or late ordering of products.

F. Owner's Duties:
1. Review Contractor's RFS with reasonable promptness.
2. Notify Contractor in writing of decision to accept or reject requested substitution.

G. Administrative Requirements:
1. Specified products, materials, or systems for Project may include engineering or on-file standards required by the regulatory agency. Contractor's substitution of products, materials or systems may require additional engineering, testing, reviews, approvals, assurances, or other information for compliance with regulatory agency requirements or both. Provide all agency approvals or other additional information required and pay additional costs for required Owner services made necessary by the substitution at no increase in Contract Sum or Contract Time, and as a part of substitution proposal.

## 1.4 PRODUCT DELIVERY REQUIREMENTS

A. Deliver products in accordance with manufacturer's instructions.
B. Promptly inspect shipments to assure that products comply with requirements, quantities are correct, and products are undamaged.

## 1.5 PRODUCT STORAGE AND HANDLING

A. Store products only in staging area per provisions of Section 01100 (Summary).
B. Handle, store, and protect products in accordance with manufacturer's instructions, with seals and labels intact and legible. Store sensitive products in weather-tight, climate-controlled enclosures.
C. For exterior storage of fabricated products, place on appropriate supports, above ground.
D. Cover products subject to deterioration with impervious sheet covering. Provide ventilation to avoid condensation.
E. Store loose granular materials on solid flat surfaces in a well-drained area.
F. Provide equipment and personnel to store products by methods to prevent soiling, disfigurement, or damage.
G. Arrange storage of products to permit access for inspection. Periodically inspect to assure products are undamaged and are maintained under specified conditions.

## PART 2 PRODUCTS - NOT USED

## PART 3 EXECUTION - NOT USED

END OF SECTION

SECTION 01740

# CLEANING

## PART 1 GENERAL

### 1.1 SUMMARY

A. Section Includes:
   1. Progress Cleaning
   2. Final Cleaning

B. Related Sections:
   1. Section 01500 (Temporary Facilities and Controls)
   2. Section 02315 (Excavation and Fill)

### 1.2 PROGRESS CLEANING

A. Perform periodic cleaning to ensure that any streets and other Owner and public properties are maintained free from accumulation of waste materials, dust, mud, and debris.

B. Wet down surfaces two times per Day to lay dust and prevent the blowing of dust to nearby residences or public properties.

C. Keep paved roads clean and free of dust, mud, and debris resulting from Contractor's operations. Daily cleanup throughout the job will be required as Contractor progresses with its Work, but extra attention to cleanup shall be made prior to weekends and holidays. Without limiting the foregoing, remove trench spoil along traveled ways daily; grade and vacuum broom surfaces initially where applicable and later water flush with high-pressure sprays, being careful to avoid downstream contamination.

D. All dust, mud, spoils, and construction debris shall be removed daily from roadways, adjacent public roads, ditches, shoulders, and private property (fills or spoils placed on private property at private property owner's written request excepted) using wet power vacuum street sweepers at least once per day. The use of dry power sweeping is prohibited.
.

E. Disposal of Materials:
   1. Waste materials, debris, and rubbish shall be disposed of at sites to be chosen by Contractor in accordance with applicable local, state, and federal regulations.
   2. Contractor is cautioned that the County of Sonoma and cities within the county have regulations governing the disposal of rubble, broken pavement, and similar materials.
   3. Become familiar with the requirements of the agency having jurisdiction over any contemplated disposal site and comply with such requirements.

F. Excess soil from performance of Work shall be disposed at sites to be chosen by Contractor in accordance with applicable local, state, and federal regulations, and, if applicable, in accordance with Contractor's soil disposal plan. If Contractor elects to dispose of soil on any private property, prior to any such disposal, a letter allowing such disposal shall be obtained from the property owner and presented to Owner. The letter shall state that the property owner has complied with necessary local, state, and federal laws with respect to disposal on property owner's property. Contractor is advised that the property owner is required to obtain a fill permit from PRMD. Regardless of the location of the disposal area, Contractor shall specify the location in the Storm Water Pollution Prevention Plan (SWPPP) if required under Section 01500 (Temporary Facilities and Controls). Any requirements in

the SWPPP that pertain to the area of Work shall also apply to the disposal area. In addition, placement of fill in wetland areas is subject to permit procedures of the US Army Corps of Engineers. At the completion of Work, a letter from each affected property owner will be required releasing Contractor, Owner, Agency, and any Owner consultant from future liability.

G. If Contractor does not properly clean the Site, in the opinion of Owner, then Owner shall have the option of using outside equipment to perform the cleanup and such cost will be withheld from the Contract Sum.

H. Equipment and Vehicle Cleaning:
   1. Equipment shall be cleaned of any sediment or vegetation before transferring and using in a different watershed to avoid spreading pathogens or exotic or invasive species between watersheds.
   2. No runoff from vehicle or equipment washing is allowed to enter waters of the State, including the creek channel or storm drains, without being subjected to adequate filtration (e.g., vegetated buffers, hay wattles, or bales, silt screens).

### 1.3 FINAL CLEANING

A. Execute final cleaning prior to final inspection, using only properly skilled workers.

B. Remove grease, dust, dirt, stains, labels, fingerprints, and other foreign materials from exposed interior and exterior finished surfaces.

C. Repair, patch, and touch up marred surfaces to match adjacent finishes.

D. Clean interior and exterior surfaces exposed to view: remove temporary labels, stains and foreign substances, polish transparent and glossy surfaces, vacuum carpeted and soft surfaces.

E. Clean equipment and fixtures to a sanitary condition, clean or replace filters of mechanical equipment operated during construction, clean ducts, blowers and coils of units operated without filters during construction.

F. Clean Site.

G. Mechanically sweep paved areas.

H. Remove waste and surplus materials, rubbish, and construction facilities from Site.

## PART 2 PRODUCTS – NOT USED

## PART 3 EXECUTION – NOT USED

END OF SECTION

SECTION 01741

# CONSTRUCTION MATERIAL WASTE MANAGEMENT PLAN

## PART 1 GENERAL

### 1.1 CONSTRUCTION MATERIAL WASTE MANAGEMENT PLAN

A. Submit Construction Material Waste Management Plan that includes, but is not limited to:
   1. Management monitoring program that includes, at a minimum, multiple recyclables containers. Goal is to divert 75 percent of materials waste to recycling instead of landfill. This applies only to materials that would typically be disposed via dumpster.
   2. Current recycling program used by each material supplier for materials listed in Divisions 1-16.
   3. Estimate of on-Site material reuse (native fill) in tons.
   4. Completed Self-Certification of Compliance for Contractor and each listed Subcontractor. Self-Certification of Compliance form is included at the end of this Section 01741.

B. Submit monthly progress reports updated with waste management log that includes which material containers have been removed, how many have been removed, and the weight of those containers.

## PART 2 PRODUCTS - NOT USED

## PART 3 EXECUTION - NOT USED

END OF SECTION

SELF-CERTIFICATION OF COMPLIANCE FORM FOLLOWS THIS SECTION

**SELF-CERTIFICATION OF COMPLIANCE WITH CONSTRUCTION MATERIAL WASTE PLAN**

Firm Name: _____ Phone: _____

Address: _____

Principal Service or Product: _____

☐ Prime Contractor ☐ Supplier of Material/Service

☐ Subcontractor ☐ Broker

☐ Sole Ownership ☐ Corporation

☐ Partnership ☐ Joint Venture

I, Contractor/Subcontractor, hereby certify that I have read and understood, and agree to adopt and implement, the approved Construction Waste Management Plan for the **Sonoma Valley County Sanitation District, Sewer Trunk Replacement (Agua Caliente Creek Crossing)**.

Certified by:

Name:_____ Title:_____

Signature:_____ Date:_____

SECTION 01770

# CONTRACT CLOSEOUT

## PART 1 GENERAL

### 1.1 SUMMARY

A. Section Includes:
   1. Description of Contract closeout procedures including:
      a. Removal of Temporary Construction Facilities
      b. Substantial Completion
      c. Final Completion
      d. Project Record Documents
      e. Project Guarantee
      f. Warranties
      g. Turn-In
      h. Computer Programs
      i. Release of Claims
      j. Fire Inspection Coordination
      k. Building Inspection Coordination

### 1.2 REMOVAL OF TEMPORARY CONSTRUCTION FACILITIES

A. Remove temporary materials, equipment, services, and construction prior to Substantial Completion inspection.
B. Clean and repair damage caused by installation or use of temporary facilities.
C. Restore permanent facilities used during construction to specified condition.
D. Comply with paragraph 1.16 of Section 01500 (Temporary Facilities and Controls).

### 1.3 SUBSTANTIAL COMPLETION

A. When Contractor considers Work or designated portion of the Work as Substantially Complete, submit timely written notice to Owner, with list of items remaining to be completed or corrected.
B. Within reasonable time, Owner will inspect to determine status of completion.
C. Should Owner determine that Work is not Substantially Complete, Owner will promptly notify Contractor in writing, listing all defects and omissions.
D. Remedy deficiencies and send a second written notice of Substantial Completion. Owner will reinspect the Work. If deficiencies previously noted are not corrected on reinspection, then Contractor shall pay the cost of the reinspection.
E. When Owner concurs that Work is Substantially Complete, Owner will issue a Certificate of Substantial Completion, accompanied by Contractor's list of items to be completed or corrected as verified by Owner.
F. Before a Certificate of Substantial Completion will be issued, Contractor must accomplish:
   1. Submittal of final Installation, Operation, and Maintenance Manuals.
   2. Completion of asphalt resurfacing.
   3. Completion of Work under Section 02375 (Hydroseed and Erosion Control Blanket).
G. A punch list examination will be performed upon Substantial Completion. One follow-up review of punch list items for each discipline will be provided. If further Site visits are

required to review punch list items due to incompleteness of the Work by Contractor, Contractor shall reimburse Owner for costs associated with these visits.

## 1.4 FINAL COMPLETION

A. Final Completion occurs when Work meets requirements for Owner's Final Acceptance. When Contractor considers Work is Finally Complete, submit written certification that:
   1. Contractor has inspected Work for compliance with Contract Documents, and all requirements for Final Acceptance have been met.
   2. Except for Contractor maintenance after Final Acceptance, Work has been completed in accordance with Contract Documents and deficiencies listed with Certificate of Substantial Completion have been corrected. Equipment and systems have been tested in the presence of Owner, and are operative.
   3. Work is complete and ready for final inspection.

B. In addition to submittals required by Contract Documents, provide submittals required by governing authorities and submit final statement of accounting giving total adjusted Contract Sum, previous payments, and sum remaining due.

C. When Owner finds Work is acceptable and final closeout submittals are complete, Owner will issue final Change Order reflecting approved adjustments to Contract Sum not previously made by Change Order. Should Owner determine that Work is incomplete or Defective:
   1. Owner promptly will so notify Contractor, in writing, listing the incomplete or Defective items.
   2. Promptly remedy the deficiencies and notify the Owner when it is ready for reinspection.
   3. When Owner determines that the Work is acceptable under the Contract Documents, Owner will request Contractor to make closeout submittals.

D. Final adjustments of accounts:
   1. Submit a final statement of accounting to Owner, showing all adjustments to the Contract Sum and complete and execute Document 00650 (Agreement and Release of Any and All Claims).
   2. If so required, Owner shall prepare a final Change Order for submittal to Contractor, showing adjustments to the Contract Sum that were not previously made into a Contract Modification.

## 1.5 PROJECT RECORD DOCUMENTS

A. Contract Documents will not be closed out and final payment will not be made until completion and submittal of Project Record Documents described in Section 01780 (Project Record Documents).

## 1.6 PROJECT GUARANTEE

A. Requirements for Contractor's guarantee of completed Work are included in Article 9 of Document 00700 (General Conditions) and Document 00630 (Guaranty).

B. Neither recordation of Final Acceptance nor final certificate for payment nor provision of the Contract nor partial or entire use or occupancy of premises by Owner shall constitute acceptance of Work not done in accordance with Contract Documents nor relieve Contractor of liability in respect to express warranties or responsibility for faulty materials or workmanship.

C. Owner may make repairs to Defective Work as set forth in Document 00700 (General Conditions), paragraph 9.3.

D. If, after installation, operation, or use of materials or equipment to be provided under Contract proves to be unsatisfactory to Owner, Owner shall have right to operate and use materials or equipment until said materials and equipment can, without damage to Owner, be taken out of service for correction or replacement. Period of use of Defective materials or equipment pending correction or replacement shall in no way decrease guarantee period required for acceptable corrected or replaced items of materials or equipment.

E. Nothing in this Section 01770 shall be construed to limit, relieve, or release Contractor's, Subcontractors', and equipment suppliers' liability to Owner for damages sustained as result of latent defects in equipment caused by negligence of suppliers' agents, employees, or Subcontractors. Stated in another manner, warranty contained in the Contract Documents shall not amount to, nor shall it be deemed to be, waiver by Owner of any rights or remedies (or time limits in which to enforce such rights or remedies) it may have for Defective workmanship or Defective materials under laws of this State pertaining to acts of negligence.

## 1.7 WARRANTIES

A. Execute Contractor's Submittals and assemble warranty documents and operation and maintenance manuals executed or supplied by Subcontractors, suppliers, and manufacturers.
   1. Provide table of contents and assemble in 8½ inches by 11 inches three-ring binder with durable plastic cover, appropriately separated and organized.
   2. Assemble in Specification Section order.

B. Submit material prior to final Application for Payment.
   1. For equipment put into use with Owner's permission during construction, submit within 14 Days after first operation.
   2. For items of Work delayed materially beyond Date of Substantial Completion, provide updated Submittal within 14 Days after acceptance, listing date of acceptance as start of warranty period.

C. Warranties are intended to protect Owner against failure of Work and against deficient, Defective, and faulty materials and workmanship, regardless of sources.

D. Limitations: Warranties are not intended to cover failures that result from the following:
   1. Unusual or abnormal phenomena of the elements
   2. Vandalism after Substantial Completion
   3. Insurrection or acts of aggression including war

E. Related Damages and Losses: Remove and replace Work which is damaged as result of Defective Work, or which must be removed and replaced to provide access for correction of warranted Work.

F. Warranty Reinstatement: After correction of warranted Work, reinstate Guarantee Period for corrected Work as of the date the corrected Work was done.

G. Replacement Cost: Replace or restore failing warranted items without regard to anticipated useful service lives.

H. Warranty Forms: Submit drafts to Owner for approval prior to execution. Forms shall not detract from or confuse requirements or interpretations of Contract Documents.
   1. Warranty shall be countersigned by manufacturers.
   2. Where specified, warranty shall be countersigned by Subcontractors and installers.

I. Rejection of Warranties: Owner reserves right to reject unsolicited and coincidental product warranties that detract from or confuse requirements or interpretations of Contract Documents.

J. Term of Warranties: For materials, equipment, systems, and workmanship, warranty period shall be as stated in Document 00630 (Guaranty), except where:
   1. Detailed Specifications for certain materials, equipment or systems require longer warranty periods.
   2. Materials, equipment or systems are put into beneficial use of Owner prior to Final Completion as agreed to in writing by Owner.

K. Transfer of Warranties: Any warranty shall automatically transfer, without charge, to a subsequent owner who acquires the Project. Any transfer of the Project shall not extend the duration of any warranty.

L. Warranty of Title: No material, supplies, or equipment for Work under Contract shall be purchased subject to any chattel mortgage, security agreement, or under a conditional sale or other agreement by which an interest therein or any part thereof is retained by seller or supplier. Contractor warrants good title to all material, supplies, and equipment installed or incorporated in Work and agrees upon completion of all Work to deliver premises, together with improvements and appurtenances constructed or placed thereon by Contractor, to Owner free from any claim, liens, security interest, or charges, and further agrees that neither Contractor nor any person, firm, or corporation furnishing any materials or labor for any Work covered by Contract shall have right to lien upon premises or improvement or appurtenances thereon. Nothing contained in this paragraph, however, shall defeat or impair right of persons furnishing materials or labor under bond given by Contractor for their protection or any rights under law permitting persons to look to funds due Contractor in hands of Owner.

## 1.8 TURN-IN

A. Contract Documents will not be closed out and final payment will not be made until all keys and locks issued to Contractor during prosecution of Work and letters from property owners, if required under paragraph 1.2.F of Section 01740 (Cleaning), are turned in to Owner.

## 1.9 COMPUTER PROGRAMS

A. When any equipment requires operation by computer programs, submit the program, on appropriate electronic media, plus all user manuals and guides for operating the programs and making changes in the programs for upgrading and expanding the databases. Program shall be Windows 7 compatible. Provide required licenses to Owner at no additional cost.

## 1.10 RELEASE OF CLAIMS

A. Contract Documents will not be closed out and final payment will not be made until Document 00650 (Agreement and Release of Any and All Claims) is completed and executed by Contractor and Owner.

## 1.11 FIRE INSPECTION COORDINATION

A. Coordinate fire inspection and secure sufficient notice to Owner to permit convenient scheduling (if applicable).

## 1.12 BUILDING INSPECTION COORDINATION

A. Coordinate with Owner a final inspection for the purpose of obtaining an occupancy certificate (if applicable).

## PART 2 PRODUCTS – NOT USED

## PART 3 EXECUTION – NOT USED

END OF SECTION

SECTION 01780

# PROJECT RECORD DOCUMENTS

## PART 1 GENERAL

### 1.1 SUMMARY

A. Section Includes:
   1. Administrative and procedural requirements for the following Project Record Documents:
      a. Project Record Drawings and Shop Drawings
      b. Project Record Specifications
      c. Miscellaneous Project Record Submittals
B. Specific Project Record Documents requirements that expand requirements of this Section may be included in the individual Sections of Divisions 2 through 16.

### 1.2 SUBMITTAL

A. During construction, bring hard-copy updates of the Project Record Drawings (Field Set) to monthly Progress Payment Meetings.
B. At completion of Project, deliver Project Record Documents to Owner. Project Record Documents required include:
   1. Marked-up copies of Drawings (Field Set)
   2. Final Project Record Drawings
   3. Marked-up copies of Specifications
   4. Marked-up copies of Shop Drawings, if applicable
   5. Miscellaneous Project Record Submittals
C. Accompany submittal with transmittal letter containing:
   1. Date
   2. Project title and Owner's Contract number
   3. Contractor's name and address
   4. Number and title of each Project Record Document
   5. Certification that each document as submitted is complete and accurate, and signature of Contractor or Contractor's authorized representative.

### 1.3 GENERAL

A. Prior to start of construction, Owner will provide one full size set of Drawings and one copy of the Project Manual for Contractor's use for recording as-built conditions.
B. Post changes and Modifications to the Contract Documents as they occur. Do not wait until the end of the Project. Owner will review Project Record Documents on a monthly basis to assure compliance with this requirement.
C. Refer instances of uncertainty to Owner for resolution.
D. Maintenance of Documents:
   1. Store Project Record Documents in the field office apart from Contract Documents used for construction.
   2. Do not permit Project Record Documents to be used for construction purposes.
   3. Maintain Project Record Documents in good order and in a clean, dry, neat, and legible condition.
   4. Make Project Record Documents available at all times for inspection by Owner.

## 1.4 PROJECT RECORD DRAWINGS AND SHOP DRAWINGS

A. Quality Draftsmanship: Project Record Drawings and Project Record Shop Drawings shall be prepared by competent drafters and shall be clear and fully legible. Owner shall be the sole judge of the acceptability of the Project Record Drawings and Project Record Shop Drawings.

B. Mark-up Procedure: During the construction period, maintain a set of full size prints of Drawings and Shop Drawings for Project Record Documents purposes ("Field Set"). Stamp each document (on each sheet or page) "PROJECT RECORD" in 2-inch high letters. Keep record documents current. Note: A reference by number to a Change Order, CCD, RFI, RFQ, RFP, Field Order or other such document is not acceptable as sufficient record information on any record document. Do not permanently conceal any Work until required information has been recorded.

1. Mark Drawings and Shop Drawings to indicate the actual installation where the installation varies appreciably from the installation shown originally. Give particular attention to information on concealed elements that would be difficult to identify or measure and record later. Items required to be marked include but are not limited to:
   a. Dimensional changes to the Drawings and Shop Drawings
   b. Revisions to details shown on the Drawings and Shop Drawings
   c. Depths of various elements of foundation in relation to main floor level or survey datum
   d. Variable or concealed field conditions
   e. Horizontal and vertical location of underground utilities and appurtenances referenced to permanent surface improvements
   f. Location of internal utilities and appurtenances concealed in construction referenced to visible and accessible features of structure
   g. Locations of underground Work, points of connection with existing utilities, changes in direction, valves, manholes, catch basins, capped stub outs, invert elevations, and similar items
   h. Actual numbering and set points of each electrical circuit
   i. Field changes of dimension and detail
   j. Revisions to routing of piping and conduits
   k. Revisions to electrical circuitry
   l. Actual equipment locations
   m. Duct, conduit, and cable size and routing
   n. Changes made by Change Order or CCD
   o. Details not on original Drawings or Shop Drawings
2. Mark completely and accurately Drawings or Shop Drawings, whichever is the most capable of showing actual physical conditions. Where Shop Drawings are marked, show cross-reference on Drawings location.
3. Mark important additional information that was either shown schematically or omitted from original Drawings.
4. Use revision block to record information related to the mark-ups, including CCD numbers; Alternate numbers, Change Order numbers, and similar identification.
5. Mark Drawing and Shop Drawing sets with red, erasable colored pencil.
6. Responsibility for Mark-up: Where feasible, the individual or entity who obtained Project Record Drawing or Shop Drawing data, whether the individual or entity is the installer, Subcontractor, or similar entity, is required to prepare the mark-up on Project Record Drawings or Shop Drawings.

a. Accurately record information in an understandable and legible drawing technique.
b. Record data as soon as possible after it has been obtained. In the case of concealed installations, record and check the mark-up prior to concealment.

C. Preparation of Project Record Drawings and Project Record Shop Drawings: Immediately prior to inspection for Certification of Substantial Completion, review completed marked-up Project Record Drawings (Field Set) and Project Record Shop Drawings with Owner. When authorized, prepare final Project Record Drawings and Project Record Shop Drawings.
1. Project Record Drawings:
a. Prior to review of Contractor's Application for Payment, the Owner and Contractor will review updates to the Field Set of Project Record Drawings to verify that record documents are current.
b. Upon Certification of Substantial Completion, Contractor shall transfer all updates from the "Field Set" to a clean set of full-size contract drawings furnished by the Owner. Each sheet shall include a Project Record Drawing stamp which is dated and "wet signed" by the Contractor. Submit a full-sized PDF (scan) to Owner.
c. If Contractor chooses and Owner approves in advance, Contractor may submit electronic updates on final Project Record Drawings, so long as final Project Record Drawings preserve the integrity of the data and are compatible with Owner's software.
2. Project Record Shop Drawings:
a. Transfer all information previously marked on Field Set to a separate clean set of Shop Drawings provided by Owner. Erase, redraw, and add details and notations where applicable. Identify and date each Shop Drawing; include the printed designation "PROJECT RECORD SHOP DRAWING" in a prominent location on each Shop Drawing. Bind the set with durable paper cover sheets, with appropriate identification, including titles, dates, and other information on cover sheet.

D. In addition to requirements of this Section, comply with supplemental requirements of Divisions 15.
1. Division 15 of the Specifications may require the preparation of large scale, detailed layout drawings of the Work of that Division. These layout drawings are not Shop Drawings as defined by Section 01420 (References and Definitions), but together with Shop Drawings or layout drawings of all other affected Sections are used to check, coordinate, and integrate the work of the various Sections.
2. Include these layout drawings as part of the Project Record Documents.

## 1.5 PROJECT RECORD SPECIFICATIONS

A. During the construction period, maintain one copy of the Specifications, including Addenda and Modifications issued, for Project Record Documents purposes.

B. Mark the Project Record Specifications to indicate the actual installation where the installation varies substantially from that indicated in Specifications issued. Note related Project Record Drawing information, where applicable. Give particular attention to substitutions, selection of product options, Change Order and CCD Work, and information on concealed installation that would be difficult to identify or measure and record later.
1. In each Specification Section where products, materials or units of equipment are specified or scheduled, mark the copy with the proprietary name and model number of the product furnished.

2. Record the name of the manufacturer, catalog number, supplier and installer, and other information necessary to provide a record of selections made and to document coordination with Installation, Operation, and Maintenance Manuals.
3. For each principal product specified, indicate whether data has been submitted in Installation, Operation, and Maintenance Manuals.

C. Preparation of Project Record Specifications: Immediately prior to inspection for Certification of Substantial Completion, review completed Field Set Project Record Specifications with Owner. When authorized, prepare final Project Record Specifications.
1. After Substantial Completion and before Final Completion, carefully transfer all data shown on the Field Set to a separate clean set of Specifications provided by Owner. Include the printed designation "PROJECT RECORD SPECIFICATION" in a prominent location on the Specifications.

## 1.6 MISCELLANEOUS PROJECT RECORD SUBMITTALS

A. Refer to other Specification Sections for miscellaneous record keeping requirements and submittals in connection with various construction activities. Immediately prior to Substantial Completion, complete miscellaneous records and place in good order, properly identified and bound or filed, ready for use and reference. Submit to the Owner for Owner's records. Categories of requirements resulting in miscellaneous records may include, but are not limited to, the following:
1. List all products used in the Project, organized by Specification section and article. Product list shall be submitted in an electronic format, compatible with Microsoft Excel 2000.
2. Delivery records of materials incorporated into the Work
3. Records of product lot numbers and expiration dates
4. Quality Assurance/Quality Control records for field Work

# PART 2 PRODUCTS – NOT USED

# PART 3 EXECUTION – NOT USED

END OF SECTION

# DIVISION 2

# SITE CONSTRUCTION

SECTION 02110

# EXCAVATION, REMOVAL, AND HANDLING OF HAZARDOUS MATERIALS

## PART 1 GENERAL

### 1.1 SUMMARY

A. Section Includes:
   1. Management of asbestos in asbestos cement pipe and manholes

### 1.2 DEFINITIONS

A. BAAQMD: Bay Area Air Quality Management District

### 1.3 SUBMITTALS

A. Work Plans:
   1. Hazardous Waste Testing, Handling, Stockpiling, Transporting, and Disposal Plan for Asbestos Cement Pipe (ACP Plan):
      a. Prepared and stamped by a California Registered Professional Civil Engineer or a California Registered Geologist experienced in construction activities involving hazardous materials
      b. The ACP Plan shall, at a minimum, contain the following:
         1) General
            (a) Detailed description of the proposed construction methods for safely excavating, containing, stockpiling, transporting, and cleanup of asbestos cement pipe
            (b) Proposed location of temporary stockpiling area(s)
            (c) Procedure for:
               (i) Erosion/surface water runoff control
               (ii) Security
               (iii) Dust prevention
               (iv) Decontamination of construction
            (d) Description of the required documents to be obtained by Contractor, including EPA Waste Generator Number(s) and waste manifests, if required.
            (e) Description of permits (if any) that must be obtained or regulations that must be complied with in order to implement the Plan including, but not limited to, the following Sections of BAAQMD Regulation 11 (Hazardous Pollutants), Rule 2 (Asbestos Demolition, Renovation and Manufacturing):
               (i) Section 303 (Demolition, Renovation, and Removal)
               (ii) Section 304 (Waste Disposal)
               (iii) Section 401 (Reporting Demolition and Renovation)
               (iv) Section 502 (Waste Shipment Records)
               (v) Section 608 (Warning Signs for Transport Vehicles)
            (f) Names and addresses of Contractor's proposed permitted facilities for treatment, recycling, and/or disposal
            (g) Any proposed treatment methods to be implemented prior to disposal
         2) BAAQMD Notification of Intent: Prepare a written Notice of Intent to demolish (remove) and renovate (abandon-in-place) underground asbestos cement sewer pipe in conformance with BAAQMD Regulation 11, Rule 2, Section 401.

c. Upon Owner's favorable review of the ACP Plan, submit the ACP Plan to appropriate regulating agencies for review as required. Regulating agencies may include, but are not limited to, the following:
   1) Sonoma County Department of Emergency Services
   2) BAAQMD:
      (a) Submit report of demolition (removal) of existing underground asbestos cement sewer pipe to the BAAQMD as a revision to a previously Owner submitted notification using a completed and signed BAAQMD "Demolition, Regulation 11, Rule 2, Notification Form"
      (b) Submit report of renovation (abandonment-in-place) of existing underground asbestos cement sewer pipe to the BAAQMD as a revision to a previously Owner submitted notification using a completed and signed BAAQMD "Renovation, Regulation 11, Rule 2, Notification Form"
   3) Sonoma County Health Services Department, Division of Environmental Health (SCDEH)
   4) PRMD
   5) OSHA
   6) Other agencies, as applicable

d. Submit all necessary notifications

e. Submit approvals and permits to Owner prior to mobilization

2. Manhole Coring, Handling, Transport, Asbestos Testing, Partial Demolition and Disposal, and Abandoning Plan for Manholes to be Abandoned (Manhole Abandonment Plan)
   a. The Manhole Abandonment Plan shall, at a minimum, contain the following:
      1) General
         (a) Detailed description of the proposed construction methods for safely excavating, containing, stockpiling, transporting, and cleanup of manholes to be abandoned
         (b) Proposed location of temporary stockpiling area(s)
         (c) Procedure for:
            (i) Erosion/surface water runoff control
            (ii) Security
            (iii) Dust prevention
            (iv) Decontamination of construction
         (d) Description of the required documents to be obtained by Contractor, including EPA Waste Generator Number(s) and waste manifests, if required.
         (e) Description of permits (if any) that must be obtained or regulations that must be complied with in order to implement the Plan including, but not limited to, the following Sections of BAAQMD Regulation 11 (Hazardous Pollutants), Rule 2 (Asbestos Demolition, Renovation and Manufacturing):
            (i) Section 303 (Demolition, Renovation, and Removal)
            (ii) Section 304 (Waste Disposal)
            (iii) Section 401 (Reporting Demolition and Renovation)
            (iv) Section 502 (Waste Shipment Records)
            (v) Section 608 (Warning Signs for Transport Vehicles)
         (f) Names and addresses of Contractor's proposed permitted facilities for testing, treatment, recycling, and/or disposal
         (g) Any proposed treatment methods to be implemented prior to disposal

2) BAAQMD Notification of Intent: Prepare a written Notice of Intent to partially demolish (remove) and renovate (abandon-in-place) underground concrete manholes potentially containing asbestos fibers in conformance with BAAQMD Regulation 11, Rule 2, Section 401.

b. Upon Owner's favorable review of the Manhole Abandonment Plan, submit the Plan to appropriate regulating agencies for review as required. Regulating agencies may include, but are not limited to, the following:
   1) Sonoma County Department of Emergency Services
   2) BAAQMD:
      (a) Submit report of partial demolition (removal) of existing underground concrete manholes to the BAAQMD
      (b) Submit report of renovation (abandonment-in-place) of existing underground concrete manholes to the BAAQMD
   3) Sonoma County Health Services Department, Division of Environmental Health (SCDEH)
   4) PRMD
   5) OSHA
   6) Other agencies, as applicable
c. Submit all necessary notifications
d. Submit approvals and permits to Owner prior to mobilization

## 1.4 PROJECT CONDITIONS

A. Existing Conditions:
   1. Asbestos Cement Pipe:
      a. Some existing sanitary sewer and fittings to be removed are expected to be asbestos cement pipe.
      b. All known locations of asbestos cement pipe are indicated; other locations may exist.
   2. Concrete Manholes:
      a. Some existing sanitary sewer concrete manholes to be partially demolished and abandoned may contain asbestos fibers.
      b. All known locations of concrete manholes that may contain asbestos to be partially demolished and abandoned are indicated

# PART 2 PRODUCTS - NOT USED

# PART 3 EXECUTION

## 3.1 HAZARDOUS MATERIAL MANAGEMENT

A. Asbestos Cement Pipe:
   1. Remove, handle, store, transport, and dispose of pipe in accordance with all applicable regulations and the approved ACP Plan.
   2. Dust emissions of friable material are prohibited. If there is excessive dust in Owner's opinion, Owner will stop all Work until material is properly managed.
B. Concrete Manholes:
   1. Coring, handling, transport, asbestos testing, partial demolition and disposal, and abandoning of concrete manholes shall be accomplished in accordance with all applicable regulations and the approved Manhole Abandoning Plan

2. Dust emissions of friable material are prohibited. If there is excessive dust in Owner's opinion, Owner will stop all Work until material is properly managed.

END OF SECTION

SECTION 02116

# GROUNDWATER DISPOSAL

## PART 1 GENERAL

### 1.1 SUMMARY

A. Section Includes: Handling, storage, testing, transporting and disposal of groundwater from trench dewatering potentially containing volatile organic compounds (VOCs), petroleum hydrocarbons, metals, and/or chlorinated solvents.

B. Related Sections:
   1. Section 02240 (Dewatering)

### 1.2 SUBMITTALS

A. Quality Assurance/Control Submittals:
   1. Groundwater Characterization and Management Plan (GCM Plan):
      a. Prepare a GCM Plan that describes the storage, characterization, treatment, transportation, and disposal of groundwater generated during trench excavation dewatering activities.
         1) A California Registered Professional Civil Engineer or a California Registered Geologist experienced in construction activities involving groundwater silt removal shall prepare and stamp the GCM Plan.
      b. Submit Owner-approved GCM Plan attached to Request for One Time Groundwater Discharge permit application to Owner prior to implementing the GCM Plan.
      c. The GCM Plan shall, at a minimum, contain the following:
         1) Estimated volume of water expected to be generated during dewatering activities and the rate of extraction.
         2) A list of chemicals of concern that may potentially be present in groundwater entering trench excavations.
         3) Description of the type of tanks to be used for storing groundwater and estimate of the number of tanks and tank volumes required.
         4) Proposed temporary stockpile area for groundwater storage bins.
         5) Name and phone number for proposed state-certified chemical analytical laboratory.
         6) List of chemical analyses required for disposal.
         7) Planned method for achieving the water quality requirements required by the receiving facility, if any.
         8) Planned method(s) of dewatering and conveying groundwater generated from construction activities to the receiving facility, including a map.
         9) Procedures to ensure against spills, releases, or leaks during dewatering and conveyance of affected water to the receiving facility.
            (a) Evidence that disposal facility is permitted to receive the water at the estimated concentrations
            (b) Acceptance criteria and contaminant limits
         10) Secondary disposal point in the event that contaminant concentrations exceeds the primary disposal facility's acceptance criteria.
         11) Identification of permits or design limitations (e.g., flow rate, emission rate) of the receiving facility that may affect dewatering operations.

12) A description of the required documents to be obtained by Contractor.
13) Notification procedures in the event of an emergency.
14) Procedures for notification and coordination with receiving facility personnel prior to when dewatering activities are to occur.
15) A description of permits (if any) that must be obtained or regulations that must be complied with in order to implement the GCM Plan.
16) Identification of groundwater management procedure to be used for handling and disposing groundwater containing contaminants exceeding the acceptable limits for discharging to sanitary sewer.
17) Any proposed pre-disposal treatment methods and associated permits that must be obtained or regulations that must be complied with in order to implement the proposed pre-disposal treatment methods.

2. Reports: Laboratory analysis reports

### 1.3 PROJECT CONDITIONS

A. Existing Conditions:
1. There is a potential for the presence of reportable concentrations of silt in the groundwater from dewatering activities.
2. The Work location crosses Agua Caliente Creek and is near Lilley Creek.

## PART 2 PRODUCTS - NOT USED

## PART 3 EXECUTION

### 3.1 GROUNDWATER MANAGEMENT

A. GCM Plan Implementation:
1. Implement the approved GCM Plan for groundwater encountered during trenching operations.
2. Provide a minimum of two 2,500-gallon double-walled water storage tanks on Site. If more storage capacity is needed, provide additional storage tanks on Site. Water storage tanks shall be stored at an Owner-approved area.
3. Collect groundwater samples from holding tank(s) and submit to a chemical analysis laboratory certified under the State Environmental Laboratory Accreditation Program (ELAP). Analyses required for the samples shall at a minimum include: Silt, or as otherwise required by the Owner's Wastewater Source Control Section. Additional analyses shall be performed that may be required by the receiving facility for disposal or recycling of the groundwater.
4. Discharge of groundwater to the sewer:
   a. Store dewatering water in tanks.
   b. Analyze water per Owner's Wastewater Discharge Limitations related to Owner's Groundwater Disposal to Sewer Permit requirements.
   c. Provide analytical results to Owner.
   d. E-mail analytical results to Owner's Wastewater Source Control Section at Erik.Brown@scwa.ca.gov.
   e. Obtain written approval to discharge from Owner and provide copy of chemical analysis results.

f. Notify Owner a minimum of 48 hours prior to any discharge to sewer following approval of analytical results. State intention to discharge to sewer and include location, start date, and time.
g. Discharge location shall be approved in writing by Owner.
h. Discharge through a totalizing meter that has been calibrated within one week of discharge. Provide written evidence of meter calibration by a certified meter calibration company prior to any discharge.

5. Upon completion of dewatering Work, decontaminate temporary storage tanks and dewatering pumps and remove from the Site. Contractor is responsible for permanent disposal of equipment that cannot be decontaminated or recycled, in accordance with applicable laws and regulations.

END OF SECTION

SECTION 02230

# SITE CLEARING

## PART 1 GENERAL

### 1.1 SUMMARY

A. Section Includes:
   1. Site clearing and stripping topsoil

### 1.2 REFERENCES

| | |
|---|---|
| ANSI A300 | Tree Care Operations-Tree, Shrub and Other Woody Plant Maintenance-Standard Practices |

## PART 2 PRODUCTS- NOT USED

## PART 3 EXECUTION

### 3.1 PREPARATION

A. Locate, identify, and protect utilities to remain free from damage.
B. Protect benchmarks, survey control points, and existing structures from damage or displacement.

### 3.2 SITE CLEARING

A. Topsoil Removal and Redistribution:
   1. Strip topsoil to depths encountered; maximum depth 12 inches.
      a. Remove heavy growths of grass before stripping.
      b. Stop topsoil stripping sufficient distance from trees to prevent damage to main root system.
      c. Separate from underlying subsoil or objectionable material.
   2. Stockpile topsoil at a location approved by Owner.
      a. Construct storage piles to freely drain surface water.
      b. Seed or cover storage piles to prevent erosion.
   3. Redistribute stockpiled topsoil as final cover of excavated or disturbed areas and trenches.
   4. Redistribute topsoil in the same area from which it was stripped.
B. Clearing and Grubbing:
   1. Trees shall remain unless designated for removal.
   2. Clear from within limits of construction shrubs, brush, downed timber, rotten wood, heavy growth of grass and weeds, vines, rubbish, structures and debris.
   3. Grub (remove) from within limits of construction stumps, roots, root mats, logs, and debris encountered.
C. Disposal of Waste Materials:
   1. Burning or burial of waste materials on Site is prohibited.
   2. Remove waste materials from Site and dispose in accordance with permits, codes, laws, rules, and regulations.

## 3.3 ACCEPTANCE

A. Upon completion of the Site clearing, obtain Owner's acceptance of the extent of clearing, depth of stripping and rough grade.

END OF SECTION

SECTION 02240

# DEWATERING

## PART 1 GENERAL

### 1.1 SUMMARY

A. Section Includes:
1. Dewatering system:
   a. Sizing
   b. Operational requirements and details
   c. Materials
2. Water:
   a. Handling
   b. Storage
   c. Testing
   d. Transporting
   e. Disposal

B. Related Sections:
1. Section 01100 (Summary)
2. Section 02116 (Groundwater Disposal)
3. Section 02255 (Shoring)
4. Section 02315 (Excavation, Bedding, Backfill, and Resurfacing)
5. Section 02446 (Trenchless Installation)
6. Section 02535 (Sanitary Sewage Systems)
7. Section 02536 (Manholes Frames and Covers)
8. Section 03480 (Precast Concrete Structures)

### 1.2 DEFINITIONS

A. Analytical Testing: Field sampling and analysis at a California Department of Health Services-approved laboratory.

### 1.3 SYSTEM DESCRIPTION

A. Performance Requirements:
1. Control the rate and effect of dewatering in such a manner as to avoid all settlement and subsidence.
2. Allow for the safe performance of work within excavations.
3. Allow material to be excavated and placed in a dry condition.
4. Provide sufficiently dry ground conditions to permit excavation and placement of materials to grades indicated and allow construction to be performed to the specified quality required for the various items of work affected by dewatering.
5. Stabilize excavation slopes where sheeting is not required.
6. Prevent loss of fines, seepage, boils, quick conditions, or softening of foundation strata.
7. Maintain stability of sides and bottom of excavation.
8. Maintain adequate control of groundwater so that the stability of excavated and constructed slopes is not adversely affected by saturated soil and damage to structures or other facilities does not occur.
9. Prevent erosion.

10. Prevent the flooding of excavations.
11. Protect excavations from becoming wet from surface water.
12. Discharge and dispose of water in a manner that complies with applicable permits laws, and regulations, causes no injury to public and private property, and is not a menace to public health.
13. Keep trenches and pits free from water while the pipe or other structures are installed and until backfilling has progressed to a sufficient height to anchor work against possible flotation or leakage.
14. Dewatering system sufficient in size and capacity to divert surface water away from Work and to maintain sub-surface water (groundwater) at a minimum depth of three feet below the bottom of excavation.
15. At all times, have sufficient pumping machinery available for immediate use.

## 1.4 SUBMITTALS

A. Work Plans:
1. General dewatering plan requirements:
   a. Conform to applicable laws, rules, regulations and permits.
   b. Include drawings, data, and operation schedule.
   c. Schematic layout of proposed dewatering system
   d. Location, depth, and size of wellpoints, headers, sumps, and ditches
   e. Size and location of discharge lines
   f. Capacities of pumps and standby units
      1) Proposed staging area for water storage tanks
      2) Proposed volume and number of water storage tanks
      3) Include calculations demonstrating that the dewatering system will perform as indicated herein.
   g. Detailed description of dewatering methods to be employed to convey the water from Site to designated temporary storage bins and ultimate disposal site to sewer, including:
      1) Procedures to ensure against spills, releases, or leaks during dewatering and conveyance of water for disposal
      2) Water storage tanks shall be covered
      3) Location(s) and estimated volume(s) of discharge
      4) Notification procedures and contingency plan in the event of an emergency
      5) Name and phone number for proposed state-certified analytical laboratory
      6) Type of dewatering system
      7) Complete description of equipment and instrumentation to be used, with installation, operation and maintenance procedures
   h. Analytical testing required by disposal facility for acceptance
   i. Procedure for dewatering: See Section 02116 (Groundwater Disposal)
2. Prepared and stamped by a California Registered Professional Civil Engineer or a California Registered Geologist experienced in construction activities involving contaminated groundwater.

## 1.5 QUALITY ASSURANCE

A. Control the rate and effect of dewatering in such a manner as to avoid settlement and subsidence.
B. Ensure the integrity of the finished Project.

C. Where critical structures or facilities exist immediately adjacent to areas of proposed dewatering, establish reference points and observe at frequent intervals to detect any settlement that may develop. The responsibility for conducting the dewatering operation in a manner that protects adjacent structures and facilities rests solely with Contractor. The cost of repairing any damage to adjacent structures and restoration of facilities shall be the responsibility of Contractor.
D. Dewatering plan developed by Contractor's Professional Engineer and modified as needed to fit conditions. Copies and modifications shall be stamped and signed by Contractor's Professional Engineer.

## PART 2 - PRODUCTS

### 2.1 EQUIPMENT

A. Dewatering, where required, may include, but not be limited to, the use of well points, sump pumps, temporary pipelines for water disposal, rock or gravel placement, gravel filter dam, temporary concrete cut-off walls, de-silting equipment, and other means.
B. Furnish materials, tools, equipment, facilities and services as required for providing the necessary dewatering work and facilities.
C. Provide backup equipment as necessary for the replacement and for unanticipated emergencies.

## PART 3 - EXECUTION

### 3.1 GENERAL

A. All portions of the Work are subject to the dewatering requirements specified herein. Work is expected to occur below the elevation of the groundwater table and require significant dewatering effort.
B. Have on hand at all times sufficient pumping equipment and machinery in good working condition.
C. Have available at all times competent workmen for the operation of the pumping equipment.
D. Have available at all times adequate standby power generation equipment to ensure efficient maintenance of dewatering operation during power failure.
E. Unless otherwise indicated, maintain water level at least two feet below the bottom of excavation in all work areas where groundwater occurs.
F. Commence dewatering when groundwater is first encountered and continue throughout excavation, construction, pipe laying, backfilling, as applicable, and until water can be allowed to rise in accordance with the provisions of this Section.
G. At all times, promote drainage with site grading. Divert surface runoff from excavations. Collect water entering excavation from surface runoff in shallow ditches around the perimeter of the excavation, drain to sumps, and pump or drain by gravity from the excavation to maintain a bottom free from standing water.
H. Preserve the undisturbed bearing capacity of the sub grade soils at bottom of excavation.
I. If foundation soils are disturbed or loosened by the upward seepage of water or an uncontrolled flow of water, excavate affected areas and replace with drain rock at no additional cost to Owner.

J. Prevent flotation by maintaining a positive and continuous removal of water.
K. If well points or wells are used, adequately space to provide the necessary dewatering, and sandpacked and/or other means prevent pumping of fine sands or silts from the subsurface. Maintain continual check to ensure that the subsurface soil is not being removed by the dewatering operation.
L. Dispose of water from the Work in a suitable manner without damage to adjacent property. No water shall be drained into Work built or under construction without prior consent of Owner. Filter water to remove sand and fine-sized soil particles before disposal into any drainage system. Filter method is subject to Owner approval.
M. Release groundwater to its static level in such a manner as to maintain the undisturbed state of the natural foundation soils, prevent disturbance of compacted backfill and prevent flotation or movement of structures and pipelines.
N. Ensure that excavations are dry before Work is undertaken.
O. The discharge and disposal of water shall not result in the deposition of sediments that could cause current or future nuisance or adversely affect the beneficial uses of the receiving water area. The point of discharge shall be acceptable to Owner and comply with all applicable permits.
P. Additional permitting will be required by SFBRWQCB for discharge to surface water.
Q. Dispose of groundwater to sewer in accordance with Section 02116 (Groundwater Disposal).
R. Water may be disposed of on-Site in accordance with the following:
   1. Water disposal, or runoff from water disposal, to surface waters is prohibited.
   2. Control disposal of water to avoid damage to property, runoff onto adjacent properties, or public nuisance.
   3. Control release of water to prevent disturbance of the natural foundation soils or compact fill.
   4. Control discharge or disposal of water to prevent erosion.
   5. Cease on-Site disposal immediately if Owner, in its sole discretion, determines that any of the above conditions are not being met.
S. Furnish, install, operate and maintain necessary pumping and other equipment for dewatering the various parts of the Work, and to control surface flow and groundwater that may be encountered while the Work progresses so Work can be done in dry conditions. Have sufficient pumping equipment available for immediate use. Under no circumstances is the laying of pipe or placing of concrete in water permitted.
T. Install dewatering equipment per approved Dewatering Plan.
U. Keep excavations and drilled shaft foundations free from water during construction.
V. Operate dewatering systems continuously until drilled shaft foundations are poured.
W. Control groundwater to prevent softening of the bottom of excavations or formation of "quick" conditions.
X. Keep trenches free from water while the pipe or other structures are installed and until backfilling has progressed above the static groundwater line and to a sufficient height to anchor the Work against possible flotation or leakage.
Y. Discharge water in such a manner as to cause no injury to public or private property, or be a menace to public health. Dispose water found to be contaminated with silt or other contaminants as specified in Section 02116 (Groundwater Disposal).
Z. Storage:
   1. On-Site enclosed, covered, leak-free tanks
   2. Location shall not create a hazard or nuisance

AA. Analytical Testing:
1. Collect water samples from holding tank(s) and perform analytical testing.
2. Analyses to include those analyses required by the Owner for disposal to sanitary sewer.

BB. Disposal:
1. Water shall be characterized prior to disposal, as required by the receiving facility
2. Unpermitted disposal of water is prohibited
3. Dispose contaminated water at an off-Site facility permitted to accept the water.
4. Non-contaminated water may be disposed in the Owner's sanitary sewer, with the following conditions:
   a. Discharge in accordance with Owner's One Time Groundwater Discharge permit's standard conditions for discharging groundwater.
   b. Use an Owner approved manhole or disposal point
   c. Owner may restrict or suspend discharge if, as determined by Owner:
      1) Discharge exceeds sanitary sewer capacity
      2) Water quality is not acceptable

CC. Upon completion of dewatering Work, decontaminate temporary water storage tanks and dewatering pumps and remove from the Site. Contractor is responsible for disposal of sediment and equipment that cannot be decontaminated or recycled, in accordance with applicable laws and regulations.

END OF SECTION

SECTION 02255

# SHORING

## PART 1 GENERAL

### 1.1 DEFINITIONS

A. For the purposes of this Section 02255, shoring or shoring system shall mean shoring, sheeting, shielding, sloping, bracing, and equivalent provisions and protective systems for worker protection from the hazard of caving ground in open trenches, at manholes, casing jacking and receiving pits, pipe ramming and receiving pits, guided bore and receiving pits, and other excavations.

### 1.2 REFERENCES

A. CCR Title 8, Division 1, Chapter 4, subchapter 4 Construction Safety Orders, Section 1541.1

### 1.3 SYSTEM DESCRIPTION

A. Design Requirements:
   1. Comply with CCR Title 8, Division 1, Chapter 4, subchapter 4 (Construction Safety Orders), Section 1541.1.
   2. Support earth and rock pressure, unrelieved hydrostatic pressures, utility loads, equipment, pipe ramming and/or guided bore loads, applicable traffic and construction loads, and other surcharge loads.
   3. Support maximum loads that can occur during construction.

B. Performance Requirements:
   1. Provide a stable excavation without lateral or vertical movement or settlement of the ground.
   2. Prevent damage to or movement of adjacent structures and utilities.
   3. Sufficiently prevent water from entering into the excavation.

### 1.4 SUBMITTALS

A. Shop Drawings:
   1. Shoring System(s):
      a. Include supporting calculations for proposed shoring systems. Include details, arrangements, and the methods of installation, as applicable. Indicate depth of excavation at which support system will be installed.
      b. Show in the calculations the full excavation depth load to be carried by various members of the support system. Include design loads and calculated deflections of shoring and support members.
      c. Describe method of installation and removal of shoring, including the sequencing of specific components as related to excavation, construction, removal, and backfilling operations.
      d. Show in the calculations the full load from pipe ramming and guided bore methods of casing installation to be carried by various members of the support system. Include design loads and calculated deflections of shoring and support members.

B. Work Plans (Sheet Piling):
   1. Method of installation:

a. Pile or impact hammering or jetting is not allowed, however, pile vibration is allowed.
b. If pile vibration is used, hydro acoustic monitoring and temporary noise dampening is required

2. Method of anchoring or bracing
3. Reference to and coordination with storm water pollution prevention plan (SWPPP) and measures
4. Sequence of work
5. Height of impounded/retained water
6. Schedule for temporary sheet pile installation, operation, and removal
7. Daily monitoring of temporary sheet pile system for stability, scour, seepage, dewatering, water treatment, and discharge
8. Safety measures
9. Contingency plans for:
   a. Overflow of temporary sheet pile
   b. Interior seeps or boils
   c. Failure of structure or bracing, or anchorage
10. Methods and sequence for removal of system and restoration of disturbed area, including re-watering of the area if required, in a manner that minimizes erosion and turbidity. All installed facilities shall be fully in place and approved by Owner prior to removing the temporary sheet pile system. Remove and properly dispose of off-site all temporary sheet pile system components.

C. Quality Assurance/Quality Control:
1. Qualification Statements: Provide evidence of license for California Civil or Structural Engineer.

## 1.5 PROJECT CONDITIONS

A. Project Environmental Requirements:
1. Provide hydroaccoustic monitoring during steel pile driving operations.
   a. Maximum noise level allowed: 180db
   b. Provide monitoring devices at Sonoma Creek and Agua Caliente Creek (if water is present in the creek)
   c. Provide sound attenuation if necessary to reduce noise level

B. Existing Conditions:
1. If existing utilities or storm drainage piping or structures interfere with proposed method of support, modify the support system at Contractor's expense.

# PART 2 PRODUCTS

## 2.1 MATERIALS

A. Timber and structural metal used for the supporting system, whether new or used: Sound and free from defects that may impair strength.

## PART 3 - EXECUTION

### 3.1 GENERAL

A. Proceed with caution in areas where utilities or storm drainage facilities are within the shoring and excavation prism. Expose utilities and storm drainage facilities by hand excavation.
B. Maintain bracing support members in tight contact with each other and with the surface being supported.
C. Remove sheet piling and other shoring in such a manner as to prevent caving at the walls of excavations, or damage to piping, structures, or other improvements.
D. Immediately fill voids created by the removal of the supporting system with well-graded cohesionless sand, lean concrete, or sand cement grout, or as otherwise required by encroachment permits.
E. All installed facilities shall be fully in place and approved by Owner prior to removing the temporary sheet pile system.
F. Remove shoring as backfilling progresses but only when banks are stable and safe from caving or collapsing.
G. Unless otherwise approved by Owner, leave no sheeting in a trench and make no backfill against the sheeting before it is removed.
H. If sheeting extends below the invert of the pipe or manhole and is approved by Owner to be left in place, remove the upper portion by trimming in a manner satisfactory to Owner.
I. Remove and properly dispose of off-site all temporary sheet pile system components.

END OF SECTION

SECTION 02315

# EXCAVATION, BEDDING, BACKFILL, AND RESURFACING

## PART 1 GENERAL

### 1.1 SUMMARY

A. Section Includes:
1. Trench Excavation
2. Bedding and Backfill
3. Geotextile Fabric
4. Controlled Density Fill (CDF)
5. Drain Rock
6. Aggregate Base
7. Flagstone Walkway
8. Permeable Pavers
9. Concrete Curbs, Gutters, Grade Beams, Cut-off Walls
10. Shed Relocation
11. Fencing
12. Storm Drain Drop Inlet Modification
13. Relocate telephone pedestal splice box

B. Related Sections:
1. Section 02230 (Site Clearing)
2. Section 02320 (Well Abandonment)
3. Section 02375 (Hydroseed and Erosion Control Blanket)
4. Section 02446 (Trenchless Installation)
5. Section 02515 (Water Pipe)
6. Section 02535 (Sanitary Sewage Systems)
7. Section 02536 (Manholes, Frames, and Covers)
8. Section 02745 (Asphalt Pavement)
9. Section 03002 (Concrete)
10. Section 03480 (Precast Concrete Structures)

### 1.2 REFERENCES

| | | |
|---|---|---|
| A. | ANSI 300 Pruning Standards - Part 1 | Tree Care Operations - Tree, Shrub, and Other Woody Plant Maintenance - Standard Practices (Pruning) |
| B. | ASTM A36 | Standard Specification for Carbon Structural Steel |
| C. | ASTM A123 | Standard Specification for Zinc (Hot-Dip Galvanized) Coatings for Iron and Steel Products |
| D. | ASTM C33 | Standard Specification for Concrete Aggregates |
| E. | ASTM C76 | Standard Specification for Reinforced Concrete Culvert, Storm Drain, and Sewer Pipe |
| F. | ASTM C150 | Standard Specification for Portland Cement |
| G. | ASTM C260 | Standard Specification for Air-Entraining Admixtures for Concrete |
| H. | ASTM C494 | Standard Specification for Chemical Admixtures for Concrete |

| | | |
|---|---|---|
| I. | ASTM C1028 | Standard Test Method for Determining the Static Coefficient of Friction of Ceramic Tile and Other Like Surfaces by Horizontal Dynamometer Pull-Meter Method |
| J. | California Test Method No. 216 | Relative Compaction of Untreated and Treated Soils and Aggregates |
| K. | California Test Method No. 231 | Relative Compaction of Untreated/Treated Soils and Aggregates (Area Concept Utilizing Nuclear Gauges) |
| L. | Caltrans 26 | Aggregate Bases |
| M. | Caltrans 57-1.02C | Wood and Plastic Lumber Structures - Hardware |
| N. | Caltrans 68-2.02F | Permeable Material |
| O. | Caltrans 73 | Concrete Curbs and Sidewalks |
| P. | Caltrans 75-1.05 | Miscellaneous Metal – Galvanizing |
| Q. | Caltrans 80-2.02E | Fences – Wire Mesh |
| R. | Caltrans 80-3 | Chain Link Fences |
| S. | Caltrans 88 | Geosynthetics |
| T. | Greenbook 201-1 | Portland Cement Concrete |
| U. | Greenbook 201-6 | Controlled Low Strength Material (CLSM) |
| V. | Greenbook 204-2 | Treatment with Preservatives |

## 1.3 SUBMITTALS

A. Product Data:
   1. Imported materials, include source, required test results, inspection, and sieve analysis
   2. Geotextile fabrics
   3. Permeable pavers
B. Quality Assurance/Control Submittals:
   1. Design Data:
      a. Controlled Density Fill (CDF): Job mix designs
      b. Cellular Concrete: Job mix designs
   2. Test Reports:
      a. CDF: Test results on laboratory trial batches to confirm weight and strength
      b. Cellular Concrete: Test results on laboratory trial batches to confirm weight and strength
   3. Qualification Statements:
      a. Building Moving and Demolition (C-21) License
   4. Work Plans:
      a. Arborist Report by Contractor-provided ISA Certified Arborist:
         1) Arborist Report to include:
            (a) Analysis of impacts to all trees that may be affected by project construction, including the construction of trenches and pits, permeable pavement access road, and asphalt pavement access pad and roadway, and proposed methods to minimize impacts
            (b) Recommended tree limb pruning potentially affected by project construction
            (c) Recommended tree root pruning for trees potentially affected by trenching operations and/or access roadway construction, care of exposed roots during exposure, methods of backfilling roots, and care of impacted trees subsequent to backfilling operations and completion of construction
            (d) Recommended pre-construction mulching and post-construction vertical mulching under tree driplines.

(e) Recommended temporary fencing around tree driplines
(f) Recommended Special Trenching techniques
2) Final Arborist Report:
(a) Description of actions performed during trenching operations and access roadway construction in the vicinity of each tree that was impacted

## 1.4 QUALITY ASSURANCE

A. Relocation of storage shed shall be performed by a California licensed structure moving company.

## 1.5 DELIVERY, STORAGE, AND HANDLING

A. CDF: Deliver in accordance with ASTM C494.

## 1.6 SCHEDULING

A. Provide five Days' notice to Owner prior to start of ground disturbing activities along the east and west side of Agua Caliente Creek.
B. Archaeological Training Session:
1. Prior to start of any Work at the Site, Contractor shall have appropriate personnel attend a mandatory Owner-provided archaeological training session that will cover proper procedures in the event discovery is made of items of archaeological interest.

# PART 2 PRODUCTS

## 2.1 MANUFACTURERS

A. Geotextile Fabric:
1. General
a. Filter Fabric:
1) Conforming to Caltrans 88-1.02B.
2) For use with bedding material, Siphon Structure B Access Road Permeable Paver surfacing, and other areas as indicated
2. Stabilization Fabric for Trench Materials Separation
a. Mirafi: 140 N, or 140 NC
b. Propex Operating Company, LLC: Geotex 111F
c. U.S. Fabrics: US 90 NW
d. Or Approved Equal
3. Filter Fabric for Erosion Control
a. Mirafi: FW-400 Series
b. Propex Operating Company, LLC: Geotex 102F
c. U.S. Fabrics: US 230
d. Or Approved Equal
4. Stabilization Fabric for Trench Subgrade
a. Mirafi: 600X
b. Propex Operating Company, LLC: Geotex 315ST or 200ST
c. U.S. Fabrics: US 315
d. Or Approved Equal
B. Permeable Pavers:
1. Basalite Turfstone
2. Anchor Turfstone

3. Menards Turfstone
4. Or Approved Equal

## 2.2 MATERIALS

A. Trench Bedding Material (Pipe):
   1. Granular bedding material:
      a. Granular material
      b. 100 percent crushed rock with 100 percent crushed faces
      c. Sand equivalent not less than 30
      d. R-value not less than 78
      e. Size and gradation within the following limits:

| Sieve Size | Percent Passing Sieve |
|---|---|
| 3/4 inch | 100 |
| 3/8 inch | 80 |
| No. 4 | 35 to 55 |
| No. 200 | 3 to 9 |

   2. CDF: See Section 03002 (Concrete)

B. Structure Bedding Material (Manholes and Junction Boxes):
   1. Drain Rock

C. Drain Rock:
   1. In accordance with Caltrans 68-2.02F(2), Class 1 Permeable Material, Type B
   2. Free of asphaltic material
   3. Durability Index $\geq$ 40

D. Trench, Structure, and Pit Backfill Material (Structural) in roadways, asphalt paved access, rocked access, and permeable pavers resurfacing vehicular travel areas:
   1. Aggregate Base:
      a. Class 2
      b. 3/4 inch maximum
      c. In accordance with Caltrans 26-1.02
   2. CDF: See Section 03002 (Concrete)

E. Trench, Structure, and Pit Backfill Material (Native):
   1. Clean soil, free from organic material, trash, asphaltic material, debris, rubbish, broken concrete, bituminous materials, or other objectionable substances.
   2. Moisture content at time of placement: 3 percent plus/minus of optimum moisture content, as specified in accordance with California Test Methods 216 and 231.
   3. Maximum size of rocks: 4 inches.
   4. Liquid limit: Less than 40 percent.
   5. Plasticity index: Less than 15 percent.

F. Trench Surfacing Material:
   1. Aggregate Base: Class 2, 3/4 inch maximum, in accordance with Caltrans 26.
   2. Permeable Pavers: See paragraph 2.2H of this Section 02315.
   3. Asphalt: See Section 02745 (Asphalt Pavement)
   4. Native Material: Stockpiled topsoil, in accordance with Section 02230 (Site Clearing)

G. Flagstone:
   1. Color: Match Existing

2. Thickness: 3/4 inch minimum, 2 inch maximum
3. Compressive strength: 5,500 psi minimum
4. Coefficient of friction: minimum 0.61 wet and 0.84 dry per ASTM C1028.
5. Sealer:
   a. UV stable
   b. Breathable

H. Permeable Pavers:
1. Manufacturers, Models, and Dimensions:
   a. Basalite: Turfstone (23.5″ x 15.6″ x 3.125″)
   b. Anchor: Turfstone (23.5″ x 15.625″ x 3.125″)
   c. Menards: Turfstone (24″ x 16″ x 3-1/2″)
   d. Calstone Company: Turfstone (24″ x 16″ x 3.125″)
   e. Or Approved Equal
2. Seed mix: Section 02375 (Hydroseed and Erosion Control Blanket)

I. Concrete Curbs, Curb and Gutters, Grade Beams, and Cut-off Walls:
1. Concrete: See Section 03002 (Concrete)
2. Reinforcement: See Section 03002 (Concrete)

J. Mulch: See Section 02375 (Hydroseed and Erosion Control Blanket)

K. Fertilizer:
1. Fertilizer shall contain:
   a. Nitrogen: 16 to 21 percent
   b. Phosphoric acid: 6 to 8 percent
   c. Water Soluble Potash: 4 to 10 percent

L. Grass seed: Grass seed specific for use in shady lawn areas.

M. Traffic plates for trenches and pits:
1. Capable of sustaining H-20 traffic loads without shifting or bouncing
2. 1-inch thick minimum or thicker as determined by Civil or Structural Engineer calculations
3. Skid resistant

N. Temporary plastic safety/warning/barrier fencing materials to protect trees:
1. Material: UV protected high density polyethylene or polypropylene plastic
   a. Color: Orange
   b. Fencing material strength:
      1) MD Break Load: Minimum 500 pounds per foot
      2) MD Yield Strength: Minimum 600 pounds per foot
   c. Configuration: Smooth solid top and bottom with oval or rectangular mesh opening
   d. Height: Four (4) feet tall
   e. Posts: 6 feet long, 3/8-inch diameter reinforcing bar with plastic protector caps, T-bar posts, wood stakes, plastic posts
   f. Connectors: Plastic ties from fencing manufacturer, plastic zip ties, or wire ties
2. Manufacturers/Models:
   a. Tenax/Beacon Plus or Safeguard
   b. Mirafi/Mirasafe
   c. Mutual Industries, Inc./Item No. 14993
   d. Traffic Safety Warehouse/Item No. 14993
   e. Signature Systems Group/Poly Barrier
   f. U.S. Fence/Beacon Plus or Safeguard
   g. McMaster-Carr/Item No. 60105T61 or 66935T27

h. Grainger/Item No. 9ME95
i. Or Approved Equal

O. All-Weather Aggregate Base Access Roadway and Appurtenances materials:
1. Aggregate Base: See paragraph 2.2D.1 of this Section 02315
2. Side Boards: Construction grade Douglas Fir pressure treated in accordance with Caltrans 80-2.02C(3) in conformance with all federal, state, and local laws and regulations.
3. Double leaf chain link gate: Materials shall conform to Caltrans 80-10 and Details of Caltrans Standard Plans Sheets RSPA85, A85A, and A85B.
4. RCP Flared End Section: Reinforced Concrete Pipe and Flared End Section:
   a. 18-inch diameter Class 5: ASTM C76
5. Storm Drainage Inlet Structure Modifications.
   a. Cover Modifications:
      1) Steel Plate: ASTM A36, Fy = 36,000 psi
      2) Galvanizing: Hot-dip galvanized per ASTM A123

P. Permanent fencing materials:
1. Replacement of 157 Fairview Lane wood fence in middle of parcel:
   a. If determined sound and re-useable by Owner, and it needs to be removed and reinstalled or replaced, in order to construct the Work, reuse existing fencing materials exclusive of posts, with new hardware conforming to Caltrans 57-1.02C and galvanized per Caltrans 75-1.05.
   b. Fence style and height: Same as existing fence
   c. Wood: Same species and quality as existing fence
   d. Posts: Pressure treat posts in accordance with Greenbook 204-2 in conformance with all federal, state, and local laws and regulations.
   e. Concrete: See Section 03002 (Concrete)
2. Replacement of 157 Fairview Lane wire fence:
   a. If determined sound and re-useable by Owner, reuse existing fencing materials exclusive of posts, with new hardware conforming to Caltrans 57-1.02C and galvanized per Caltrans 75-1.05.
   b. Fence style and height: Same as existing fence
   c. Wood: Same species and quality as existing fence
   d. Posts: Pressure treat posts in accordance with Greenbook 204-2 in conformance with all federal, state, and local laws and regulations.
   e. Concrete: Per Section 03002 (Concrete)
   f. Wire Mesh: Same size as existing conforming, to Caltrans 80-2.02E.
3. New and Replacement of Old Maple Avenue chain link fence and chain link gates in vicinity of Siphon Structure A (North side of road):
   a. Chain link fencing:
      1) If determined sound and re-useable by Owner, reuse fencing materials exclusive of posts.
      2) Fence style and height: Same as existing fence.
      3) Materials shall conform to Caltrans 80-3 and Details of Caltrans Standard Plans Sheets RSPA85, A85A, and A85B.
      4) Concrete: Per Section 03002 (Concrete)
   b. Chain link gates:
      1) Materials shall conform to Caltrans 80-10 and Details of Caltrans Standard Plans Sheets RSPA85, A85A, and A85B.

4. Replacement of Old Maple Avenue limited access pipe fence if removal is required to accomplish Work (South side of road):
   a. If determined sound and re-useable by Owner, reuse fencing materials exclusive of posts.
   b. Fence style and height: Same as existing fence.
   c. Materials shall match existing fence.
      1) Exterior Paint: White Acrylic
         (a) Benjamin Moore & Co.: DTM Acrylic Gloss Enamel, M28
         (b) Kelly Moore: DTM Acrylic Gloss Enamel, 5780
         (c) Sherwin Williams: DTM Acrylic Coating, B667-100
         (d) Or Approved Equal
      2) Concrete: Per Section 03002 (Concrete)
5. Buena Vida Court chain link fence:
   a. Chain link fencing:
      1) If determined sound and re-useable by Owner, reuse fencing materials exclusive of posts.
      2) Fence style and height: Same as existing fence.
      3) Materials shall conform to Caltrans 80-3 and the Details of Caltrans Standards Plans Sheets RSPA85, A85A, and A85B.
      4) Concrete: Per Section 03002 (Concrete)
   b. Chain link gate:
      1) Materials and construction shall conform to Caltrans 80-10 and Details of Caltrans Standards Plans Sheets RSPA85, A85A, and A85B
6. Marino-Walsh double wire field fencing:
   a. If determined sound and re-useable by Owner, reuse fencing materials exclusive of metal "T" posts and wood posts.
   b. Two fences back to back, one for Walsh and the other for Marino, both attached to the same metal "T" posts and both to match existing fence style, type, and height as existing.
   c. Fence styles and heights same as existing
   d. Shared posts:
      1) Line Steel Painted "T" posts:
         (a) Conforming to Caltrans 80-2.02B
         (b) Length: Minimum 7 feet long
         (c) Weight: Minimum 3.1 pounds per foot
      2) Treated wood posts: (3)
         (a) Conforming to Caltrans 80-2.02C(1) and Caltrans 80-2.02C
         (b) Similar to existing
         (c) Embed wood posts in concrete
   e. Walsh side 4 feet tall:
      1) Galvanized Wire Field Fencing:
         (a) Conforming to Caltrans 80-2.02E
         (b) Height: 4.0 feet
         (c) Mesh size openings: 6 inches by 6 inches
      2) Concrete: Section 03002 (Concrete)
   f. Marino side 4 feet tall (total height):
      1) Galvanized Wire Field Fencing:
         (a) Conforming to Caltrans 80-2.02E

(b) Height: 3.0 feet
(c) Mesh size openings: 1 inch by 2 inches
2) Galvanized Barbed Wire:
(a) Conforming to Caltrans 80-2.02D
(b) 2 strands above field fencing spaced at 6 inches vertically
(c) Same gage and style as existing, 12-1/2 gage, Class 1 minimum

7. Marino-Pedroni fencing (South end of 157 Fairview Lane):
   a. If determined sound and re-useable by Owner, reuse fencing materials exclusive of posts.
   b. Fence style and height same as existing
   c. Line Steel Painted "T" posts:
      1) Conforming to Caltrans 80-2.02B
      2) Length: Minimum 8 feet long
      3) Weight: Minimum 3.1 pounds per foot
   d. Treated wood posts: (3)
      1) Conforming to Caltrans 80-2.02C(1) and Caltrans 80-2.02C
      2) Similar to existing sizes and types of wood
      3) Embed wood posts in concrete
   e. Galvanized Wire Field Fencing
      1) Conforming to Caltrans 80-2.02E.
      2) Height: 4.0 feet
      3) Mesh size openings: 4 inches by 6 inches
   f. Galvanized Barbed Wire:
      1) Conforming to Caltrans 80-2.02D
      2) 2 strands of double wire above field fencing spaced at 6 inches vertically
      3) Same gage and style as existing, 12-1/2 gage, Class 1 minimum
   g. Concrete: Section 03002 (Concrete)
8. Pedroni (157 Fairview Lane), wood fence in middle of parcel:
   a. If determined sound and re-useable by Owner, and it needs to be removed and reinstalled or replaced in order to construct the Work, reuse existing fencing materials exclusive of posts
   b. Fence style and height: same as existing
   c. New hardware:
      1) Conforming to Caltrans 57-1.02C
      2) Galvanized per Caltrans 75-1.05
   d. Wood:
      1) 4x4 Pressure treated Douglas fir post at 4 feet on centers.
      2) 2x4 Douglas fir rail at top and bottom of fence.
      3) 1x6 Douglas fir planks.
   e. Posts: Pressure treat posts in accordance with Caltrans 80-2.02C(3) in conformance with all federal, state, and local laws and regulations.
   f. Embed posts in concrete
      1) Concrete: Per Section 03002 (Concrete)
9. Pedroni-Walsh, wood frame and wire fencing (North end of 157 Fairview Lane parcel):
   a. If determined sound and re-useable by Owner, reuse fencing materials exclusive of posts.
   b. Fence style: same as existing
   c. Posts and rails:

1) Wood:
   (a) Same species and quality as existing fence
   (b) Pressure treated posts in accordance with Greenbook 204-2 in conformance with federal, state, and local laws and regulations
   (c) Post embedment below ground level same as existing and encased in concrete
2) Concrete: Section 03002 (Concrete)

d. Galvanized Wire Mesh:
   1) Conforming, to Caltrans 80-2.02E.
   2) Height: match existing
   3) Mesh size openings: 2 inches by 4 inches

## PART 3 EXECUTION

### 3.1 EARTHWORK EXCAVATION

A. General:
   1. Excavate to lines, grades, and dimensions indicated and as directed by Owner. Perform excavation at times and by methods that shall facilitate subsequent moisture control and compaction.
   2. Breakdown the sides of stump holes, test pits, and similar cavities, as directed by Owner. Remove loose or disturbed soil. Fill cavities with approved compacted material in thin lifts.

B. Over-excavation:
   1. Deeper excavations may be required by Owner to remove soft, extremely weak, or otherwise unsuitable materials that are exposed during the excavation operation.

C. Excavation for Structures:
   1. Excavate to elevations and dimensions indicated within a tolerance of plus or minus 1 inch. Extend excavations a sufficient distance from structures for placing and removing concrete formwork, for installing services and other construction, for compacting structure backfill material, and for inspections.
      a. Do not disturb bottom of excavation. Trim bottoms to required lines and grades to leave solid base to receive other Work.
      b. Level off bottoms of excavations to receive foundations, floor slabs, equipment support pads, or compacted fill. Remove loose materials and bring excavations into approved condition to receive concrete or fill material.
      c. Do not carry excavations lower than shown for foundations except as directed by Owner. If any part of excavations is carried below required depth without authorization, maintain excavation and start foundation from excavated level with concrete of same strength as required for superimposed foundation, and no extra compensation will be made to Contractor therefor.
      d. Notify Owner as soon as excavation is completed in order that subgrades may be inspected. Do not commence further construction until subgrade under compacted fill material, under foundations, under slabs-on-grade, and under equipment support pads has been inspected and approved by Owner as being free of undesirable material, being of compaction density required by this Specification, and being capable of supporting the allowable foundation design bearing pressures and superimposed foundation, fill, and building loads to be placed thereon.

D. Moisture Control:
   1. Uniformly moisten or aerate each fill or backfill layer before compaction to within 2 percent of optimum moisture content, as determined by ASTM 1557, as modified by California Test Method 216. Unless otherwise approved by Owner, fill materials shall be moisture conditioned and mixed prior to placement on the fill.
      a. Do not place backfill or fill material on surfaces that are muddy, frozen, or contain frost or ice.
      b. Remove and replace, or scarify and air-dry, otherwise satisfactory soil material that exceeds optimum moisture content by 2 percent or more and is too wet to compact to specified dry unit weight.
E. Grading:
   1. Uniformly grade areas to a smooth surface, free from irregular surface changes. Slope to drain until final subgrade is cut.
      a. Provide a smooth transition between adjacent existing grades and new grades.
      b. Cut out soft spots, fill low spots, and trim high spots to comply with required grade elevations.
   2. Finishing: Dress and grade slopes to provide a uniform surface and slopes that conform smoothly to contours or grades indicated. Finish grade other disturbed areas to a uniform surface and to drain.
F. Earth Swales and Ditches:
   1. Earth swales and ditches shall be graded to drain as indicated. Finished surfaces shall match line and grade where indicated and shall be smooth and hard.
G. Field Quality Control:
   1. Allow Owner to inspect and test subgrades and each fill or backfill layer. Proceed with subsequent earthwork only after satisfactory test results from previously completed earthwork.
   2. Owner will test compaction of soils in place according to ASTM 1556, as modified by California Test Method 231.
   3. Field density tests shall be made at locations determined by Owner.
   4. When subgrades, fills, embankments, or backfills have not achieved degree of compaction specified, scarify and moisten or aerate, or remove and replace soil to depth required; recompact and retest until specified compaction is obtained.
H. Repair/Restoration:
   1. Repair and reestablish grades where completed or partially completed surfaces become eroded, rutted, settled, or where they lose compaction due to subsequent construction operations or weather conditions.
      a. Scarify or remove and replace soil material to a depth to reestablish designed grades, reshape, and recompact.
      b. Scarify, and replace access road soil material to original grade, reshape, and compact.
   2. Repair and reestablish grades to specified tolerances where completed or partially completed surfaces settle.
      a. Remove finished surfacing, backfill with additional soil material, compact, and reconstruct surfacing.
      b. Restore appearance, quality, and condition of finished surfacing to match adjacent Work, and eliminate evidence of restoration.

## 3.2 TRENCH EXCAVATION

A. Owner will provide a qualified biological monitor to monitor trenching in Special Trenching area under the driplines of trees as indicated. Provide written notification to Owner one week prior to commencing excavation activities in Special Trenching areas.

B. Provide ISA Certified Arborist to perform the following:
   1. Review all excavation areas once they are laid out in the field but prior to actual excavation Work in order to evaluate the sites to minimize disturbance to the trees or avoid creating a hazard.
   2. Monitor construction of guided bore construction to ensure that a majority of the tree roots are not compromised.
   3. Ensure that all tree root pruning is performed in accordance with ANSI 300 Standards – Part 1 (Pruning).
   4. Ensure that all tree limb pruning is performed prior to construction in accordance with ANSI 300 pruning standards.
   5. All tree limb and root pruning is done under observation of the Arborist.
   6. Monitor Special Trenching operations.
   7. Ensure that mulch is spread under the driplines of all trees that will be impacted for the Work and on the accesses to Siphon Structures "A" and "B" prior to construction of their access surfaces.
   8. Oversee vertical mulching under tree driplines following completion of Work.
   9. Oversee the care of trees in the areas affected by Work on the Siphon Structure "B" permeable pavement area and the Siphon Structure "A" access pad area.
   10. Oversee placement of temporary protective fencing around trees as indicated with as much of a buffer zone as possible in the accesses to Siphon Structures "A" and "B" and install Trunk Protection Structures around trees per Figure 4 of ISA Publication "Best Management Practices - Managing Trees During Construction" as indicated.

C. Locate and expose existing structures, piping, conduit, etc., prior to starting excavation for runs of underground piping to avoid damage during excavation operations, and to identify potential conflicts with underground piping.

D. Cut, remove, and haul away from the Site any existing pavement over the trench. Sawcut pavement, curbs, gutters, and other structures between portion to remain and portion to be removed as indicated.

E. Whenever the maximum allowable trench width, as indicated, is exceeded for any reason, embed or cradle the pipe in concrete in a manner satisfactory to Owner. In no case shall the free working space on each side of the pipe be less than 6 inches.

F. When excavation is in rocky ground, excavate the trench a minimum of 3 inches below the grade of the bottom of the pipe, or 1/4 of the pipe outside diameter, whichever is greater, and place sufficient bedding material in the trench; tamp to bring the trench bottom up to the grade of the bottom of the pipe. The relative compaction of the tamped material shall not be less than 90 percent as determined by California Test Method No. 216. It is the intention of these requirements to provide firm, uniform bearing for the pipe.

G. Excavate only the amount of trench that can be backfilled the same day, as determined by Owner. If trenches must remain open overnight, provide steel trench plates to cover the trenches and prevent a falling hazard to people and wildlife.

H. Trim up material excavated in streets and roadways that has been placed alongside the trench, so as to cause as little inconvenience as possible to public traffic. Immediately remove and dispose of material excavated in streets and roadways not required for backfill.

I. Do not place surplus material on private property unless written permission, signed by the owner of the property, is furnished to Owner.

J. At street crossings or where existing driveways occur on a street, make provisions for trench crossings, either by means of backfill or temporary bridges, as Owner directs. Provide free access to fire hydrants, water valves, and private drives. Provide means whereby storm and surplus water can flow uninterrupted in the gutters and drainage channels.

K. If unstable trench bottoms are encountered, over-excavate to a maximum of 12 inches below required trench bottom, as directed by Owner. Place geotextile stabilization fabric and drain rock material up to the bottom plane of the bedding material as indicated, in lifts not exceeding 6 inches in loose thickness; tamp to 90 percent relative compaction.

L. Laying of Pipe:
   1. Section 02535 (Sanitary Sewage Systems)

M. Special Trenching:
   1. Notify Owner at least 48 hours prior to excavation in Special Trenching areas.
   2. Special Trenching: Trees
      a. Trenches indicated as having "Special Trenching Zone" will generally be through areas in close proximity to significant trees. Large structural roots are expected to be encountered, and shall be carefully avoided. For the top 36 inches of excavation, Work shall proceed using only hand tools, or air, vacuum, and water excavation tools**.** Trench excavation within the top 36 inches of excavation shall proceed using cuts no more than 6 inches in depth. Below the top 36 inches of excavation, standard trench excavation equipment will be permitted. Trench excavation below the top 36 inches of excavation shall proceed using cuts no more than 6 inches in depth until no longer in the root zone, as determined by Owner.
      b. Protect roots larger than 1 inch but less than 2 inches in diameter from damage and carefully expose using hand tools only. Exposed roots less than or equal to 1 inch shall be cleanly cut as close as possible to both sides of the trench using a sharp hand saw (or lopping pruners may be used for small roots). Owner will determine course of action for roots 2 inches or larger. Owner may require tunneling under roots larger than 2 inches to install pipe. Owner may direct Contractor to cut roots if tunneling or other means of installing pipe is impractical.

N. Mulching under driplines of trees
   1. Spread mulch a minimum of 6-inches thick under tree driplines.
   2. Remove and dispose of mulch following completion of construction.

## 3.3 EXCAVATION FOR STRUCTURES

A. Excavate to elevations and dimensions indicated within a tolerance of plus/minus 1 inch. Extend excavation a sufficient distance from structures for installing services and other construction, for compacting structure backfill material, for shoring, and for inspections.
   1. Do not disturb bottom of excavation. Trim bottoms to required lines and grades to leave solid base to receive other Work.
   2. Level off bottoms of excavations. Remove loose materials and bring excavations into approved condition.
   3. Do not carry excavations lower than indicated except as directed by Owner.
   4. Notify Owner as soon as excavation is completed in order that subgrades may be inspected. Do not commence further construction until subgrade has been inspected and approved by Owner as being free of undesirable material, and of compaction density required by this Section 02315.

B. If undisturbed soil is not firm, as directed by Owner, over-excavate 6-inch minimum, and install drain rock and level the working course back to grade.

## 3.4 DRAIN ROCK

A. When additional gravel, crushed rock or geotextile stabilization fabric is required to stabilize a soft, wet, or spongy foundation caused by the operations of Contractor, provide such gravel, crushed rock or geotextile stabilization fabric at Contractor's expense.
B. Owner will be the sole judge of the suitability of the trench bottom, and as to the amount of gravel required, and if geotextile stabilization fabric is required to stabilize a soft foundation. Remove any soft material and replace it with drain rock.

## 3.5 BEDDING METHODS: PIPE

A. After the pipe has been properly laid and inspected by Owner, place bedding material and work into pipe haunches.
B. Compact bedding material by hand, tamping in layers not exceeding 6 inches in un-compacted depth.
   1. The use of machine tampers is prohibited.
   2. After hand tamping, the relative compaction of the bedding material shall be not less than ninety percent (90%) as determined by California Test Method No. 216.
C. Contractor is wholly responsible for any damage to the pipe that may occur during compaction.
D. Jetting shall not be allowed for consolidation of bedding.
E. Place geotextile filter fabric between bedding and backfill in those trenches without CDF backfill.
F. Place geotextile stabilization fabric between drain rock and bedding materials.
G. Unless otherwise approved by Owner, CDF may be used as bedding material only in street or paved areas.
H. Install trench dams to contain trench sections to be filled. Space as indicated.

## 3.6 BACKFILLING METHODS: PIPE

A. Above the level of the bedding, backfill the trench as indicated and in accordance with the applicable encroachment permits.
B. Use CDF or aggregate base in areas subject to vehicular traffic. Use of CDF as backfill material in non-paved areas only upon Owner approval.
C. Native backfill may be used in non-vehicular locations, except sidewalks.
D. Jetting of trench backfill is prohibited.
E. Use mechanical compaction methods for materials except CDF.
F. CDF:
   1. CDF may be used as a backfill material only in street or paved areas.
   2. Bring up uniformly to the elevation indicated and completely fill the area designated without voids.
   3. Each filling stage shall be as continuous an operation as practicable.
   4. Temperature: At least 40° F at the time of placement; do not place when either ground or ambient air temperatures are less than 38° F.
   5. Traffic shall not be allowed over CDF for at least 24 hours after placement or until CDF has hardened sufficiently to prevent rutting, whichever is later.
   6. Ensure placement does not cause manholes or pipes to become buoyant.
      a. CDF may need to be placed in several lifts in order to prevent manhole or pipe buoyancy.

7. Cold mill just prior to placing of asphalt resurfacing to a depth sufficient to place the asphalt as indicated.
8. Remove loose material after cold milling prior to application of tack coat and placement of asphalt resurfacing material.
9. Place CDF to bottom of asphalt trench resurfacing and provide steel trench plates to cover the trench until sufficiently hard to allow resurfacing.

G. Use of steel trench plates to cover trenches for a period exceeding 7 Days is prohibited unless otherwise approved by Owner in writing.

## 3.7 TRENCH RESURFACING: NATIVE

A. Redistribute stockpiled topsoil as final cover for trenches, in accordance with Section 02230 (Site Clearing).

## 3.8 BEDDING AND BACKFILL: STRUCTURES

A. Subgrade to receive structure bedding or backfill:
   1. Free of undesirable material as determined by Owner.
   2. Scarified to a depth of 6 inches.
   3. Compact to 95% relative density per California Test Method 216 (modified).
   4. Do not place any bedding or backfill material until subgrade under bedding or backfill has been inspected and approved by Owner as being free of undesirable material and compacted to specified density.

B. Bedding:
   1. Compact drain rock to form a firm unyielding structural base.

C. Backfill:
   1. Siphon Structures "A" and "B": Backfill three sides with CDF and Type C Trench backfill on top as indicated, and the fourth side with Type C Trench backfill.
   2. Manholes:
      a. Structural
      b. Place in lift thicknesses capable of being compacted to specified relative density specified for trenches on Drawings but not to exceed the thickness allowed by Greenbook 306-1.3.2.
      c. Use hand-operated equipment for backfilling and compacting next to structures.

## 3.9 FIELD QUALITY CONTROL

A. Site Tests:
   1. Owner will perform in-place moisture-density tests after receiving written request from Contractor.
   2. Bedding, Backfill, Structural Bedding, and Backfill Material:
      a. The in-place density and moisture of soils and aggregates may be determined by the use of nuclear methods per California Test Method No. 231 (modified) with the following conditions:
         1) Test for maximum density: Determined as specified in Part II of California Test Method No. 216 (modified).
         2) After correlation is assured and the equipment standardized, then the nuclear gauge may be used as directed by Owner.

3. Contractor is responsible for ensuring that the quality of Work meets or exceeds the generally-accepted standard of Work, or Owner's requirements as indicated, if more restrictive.
4. Ensure Owner has immediate access for testing of soils.
5. Ensure excavations are safe for testing personnel.

## 3.10 FLAGSTONE WALKWAY

A. Remove existing flagstone located in the new access road as indicated on plans.
B. Remove top 9 inches minimum of soil and compact sub-base to 95 percent relative compaction. Place 6 inches minimum of Granular Bedding Material compacted to 95 percent relative compaction.
C. Place flagstone with approximately 3/8 inch separation. Re-use of undamaged removed flagstone is allowed when approved by Owner. Grout with a similar color of the existing walkway grout.
D. After flagstone is placed, seal coat any new flagstone.

## 3.11 PERMEABLE PAVERS

A. Permeable Pavers Installation Method:
   1. Construct Permeable Paver surface as indicated.
   2. Clear area to receive permeable pavers in accordance with Section 02230 (Site Clearing).
   3. Remove top 12 inches minimum of existing soil and scarify and compact sub-base to 95 percent relative compaction.
   4. Place geotextile over sub-base.
   5. Place 8 inches minimum of Granular Bedding Material compacted to 95 percent relative compaction.
   6. Place 1.5 inches of concrete sand and screed to proper elevation with a uniform moisture content prior to placing permeable pavers.
   7. Place permeable pavers with a minimum joint spacing of at least 1/16$^{th}$ inch.
   8. Vibrate permeable pavers into the sand using a high-frequency (3500 to 5000 cycles per second), low amplitude plate vibrator with a rubber mat attached to the bottom of the vibrator. If rubber mat is not available, use plywood sheets placed on the permeable pavers for protection.
   9. Place a mixture of on-site top soil, fertilizer and shady lawn grass seed at a rate of no less than 10 lbs. Per 1,000 square feet, to a depth 0.5 inches to 0.75 inches below top of paver, following planting instructions on the seed package.
B. Water area after seeding to germinate seeds, and continue to water area periodically as needed until grass is established, mowed for the first time, and approved by Owner.
C. Mow first time no sooner than 6 weeks after planting if lawn well established as determined by Owner.

## 3.12 ALL-WEATHER AGGREGATE BASE ACCESS ROADWAY AND APPURTENANCES

A. Construct all-weather aggregate base access roadway and appurtenances as indicated.

## 3.13 CONCRETE CURBS, CURBS AND GUTTER, GRADE BEAMS, AND CUT-OFF WALLS

A. Curbs, Curbs and Gutters, Grade Beams, and Cut-off Walls:
   1. Construct as indicated
   2. Construct in conformance with requirements of Caltrans 73
B. Reinforcement:
   1. Construct as indicated

## 3.14 STEEL TRENCH TRAFFIC PLATES

A. Place trench plates with wedges of compacted asphalt around edges prior to end of each Day to provide smooth transition to and from plate edges and to ensure sealing of plate edges such that no animals enter the trench. Owner will inspect plate edge sealing prior to the end of each Day. Repair voids promptly.
B. Tack weld or pin adjacent plates together to prevent separation.
C. Maintain plates and asphalt edge sealing wedges while plates are in place.
D. Remove temporary asphalt wedges when the plates are removed.

## 3.15 TEMPORARY PLASTIC SAFETY/WARNING/BARRIER FENCING

A. General:
   1. Use temporary plastic safety/warning/barrier fencing in locations where the public or animals are to be temporarily prevented from entering.
   2. Fencing installation:
      a. Post spacing along fencing: maximum 10 feet on centers
      b. Posts embedment into soil: minimum 18 inches deep
   3. Fencing removal:
      a. Remove and dispose of, or recycle, temporary plastic fencing and posts when no longer required to exclude the public or animals from the Work area.
      b. Fill post holes with compacted soil.

## 3.16 REPLACEMENT OF EXISTING FENCING

A. The new sewer crosses underneath existing fencing at seven locations. Any portions of temporarily removed fencing or damaged fencing shall be replaced with fencing of the same style, height, and with the same features as the original undisturbed fencing. The replaced fences shall be of similar or greater strength and stability as the existing fences.
B. Replace existing fences approximately as follows if removed:
   1. Barbed wire and cable fence at southerly bank of Agua Caliente Creek on FAHA property:
      a. Remove and replace with materials equal to existing if existing materials cannot be reused, exclusive of posts which shall be replaced in kind.
   2. Wood framed wire fences at 157 Fairview Lane between the southerly property line fence and the storage shed/well house, are approximately 5-feet 6-inches tall comprised of:
      a. 4x4 Pressure treated Douglass Fir post at 10 feet on centers.
      b. 2x4 Douglass Fir rail at top and 6 inches from the bottom of fence
      c. Intermediate 2/4 Douglass Fir column half way between the posts reaching from top rail to bottom rail
      d. 2″x 4″ wire mesh, 14 gauge steel, galvanized.
      e. Galvanized steel staples and nails
   3. Old Maple Avenue chain linked fence is approximately 6 feet tall comprised of:
      a. Galvanized steel post at 5 feet on centers.
      b. Chain link wire mesh.
      c. Gate consists of two 4 foot wide gate leafs with intermediate brace.
   4. Old Maple Avenue limited access welded steel pipe fence (South side of road) is approximately 3 feet tall comprised of:
      a. 4″ diameter steel posts at 4 feet on centers.
      b. 4″ diameter steel top rail welded on to posts.

c. Replace or reinstall removed pipe rail fence equivalent to existing
   1) Reconnect pipe either by welding or by use of threaded couplings
d. Paint replaced rail with two coats of paint

5. Buena Vida Court chain linked fence is approximately 4 feet tall comprised of:
   a. Galvanized steel posts at 5 feet on center.
   b. Chain linked wire mesh.
   c. Gate consists of two 3 foot wide gate leafs.
6. Field fencing between Marino and Walsh parcels where Walsh's new sewer lateral will cross:
   a. Comprised of two fences back to back, one on Walsh's side and another fence of Marino's side, both attached to the same 4 feet tall Metal "T" posts at approximately 7 feet on center:
      1) Walsh side 4 feet tall wire fence comprised of 6-inch x 6-inch wire fabric.
      2) Marino side 4 feet tall wire fence comprised of 3 feet of 1-inch x 2-inch wire fabric and topped by 2 strands of barbed wire spaced at approximately 6-inches vertically.
   b. Remove and reinstall, or replace, fencing in kind as required to construct Walsh sewer lateral.
7. Fence between Marino and Pedroni parcels (South side of Pedroni parcel):
   a. Fencing is approximately 5 feet tall comprised of 5 feet tall Metal "T" posts at approximately 8 feet on center with 4 feet of 4-inch x 6-inch field fencing with 2 strands of barbed wire on top spaces at approximately 6 inches vertically.
   b. This fence should not require removal, but if it is removed for some reason, it shall either be reinstalled if materials are not damaged, or replaced in kind.
8. Fence between Pedroni and Walsh parcels (North side of 157 Fairview Lane):
   a. Fencing is approximately 5'-6" tall comprised of:
   b. Pressure treated Douglas fir 5'-6" tall 4" x 4" posts spaced at approximately 9 feet on center with 2" x 4" top rail and 2" x 4" secondary rail between posts approximately 1.75 feet above ground
   c. 2" x 4" opening field fencing from ground to top of top rail
9. Any other fences required to be removed, or which are damaged during construction of the Work shall be replaced in kind.

## 3.17 NEW CHAIN LINK FENCE AND GATES

A. Chain Link Fencing:
   1. Install chain link fencing along Old Maple Avenue, around Siphon Structure A access pad, and along Buena Vida Court in conformance with Caltrans 80-3.03 and the Details of Caltrans Standard Plan Sheets RSPA85, A85A, and A85B
   2. New posts shall be embedded in a minimum 6 inch diameter, 3 feet deep hole, filled with concrete.
   3. Limit gap between existing and new fence to 5 inches maximum.
B. Chain Link Gates:
   1. Install gates in conformance with Caltrans 80-10.03 and the Details of Caltrans Standard Plans Sheets RSPA85, A85A, and A85B

## 3.18 REMOVE AND RELOCATION OF GROUTED ROCK WALLS

A. Remove and relocate indicated portion of grouted rock wall westerly of new asphalt paved access pad for Siphon Structure A:
   1. Clean grout off rock from removed portion of rock wall.

2. Use removed and cleaned rock as riprap for westerly storm drainage surface discharge outfall from new access pad.
3. Supplement rock riprap from removed wall as needed to cover erosion control blanket 6-inches thick with rock riprap of similar size, color, and shape as rock from wall. Unused rock riprap removed from wall along easterly side of Siphon Structure "A" access pad may be used.

B. Remove and relocate indicated grouted rock wall easterly of new asphalt paved access pad for Siphon Structure A:
1. Clean grout off indicated removed and relocated rock wall.
2. Relocate new grouted rock wall to new location as fill slope protection at the toe of fill at the back of new curb and gutter along the new drainage ditch as indicated along the north side of Old Maple Avenue and easterly of the Structure A access pad.

## 3.19 STORAGE SHED RELOCATION

A. Relocate existing storage shed and stairway as indicated.
B. Relocation shall include the following:
1. Installation of new piered foundation similar to existing as to numbers, depths, and types of piers.
2. Removal of existing pier foundations to minimum of 12-inches below grade following completion of the move.
3. Removal and re-installation of fences and gates as required.
4. Removal and destruction of well and well water piping in accordance with Section 02320 (Well Abandonment).
5. Removal and disposal of the well house attached to the storage shed, including the concrete floor, exterior walls, and roof.
6. Installation of any internal or exterior bracing to the shed prior to the move in order to prevent the structure from coming apart during the move, followed by removal and disposal of such bracing following completion of the move.

## 3.20 MODIFY EXISTING STORM DRAINAGE SIDE INLET STRUCTURE ON BUENA VIDA DRIVE

A. Connect 18-inch reinforced concrete pipe (RCP) and flared end section (FES) to structure matching bottom of RCP to invert of structure by chiseling opening in structure and grouting RCP in place and concreting remaining side openings closed.
B. Either replace existing bolted 1/4-inch thick galvanized checker plate steel cover with a new bolted 1/2-inch thick galvanized checker plate steel cover of the same dimensions, or add a 1/4-inch thick galvanized steel plate beneath the existing cover and weld the two plates together completely around their edges and bolt the completed galvanized cover back onto structure.
C. Top of all-weather access road rock shall match top of cover.
D. Re-grade area around structure to drain to FES.

## 3.21 RELOCATE EXISTING TELEPHONE SPLICE PEDESTAL BOX

A. Relocate the telephone pedestal splice box at approximate curb station 1+18 on Old Maple Avenue to behind the new curb and gutter in accordance with the requirements of AT&T.

END OF SECTION

SECTION 02320

# WELL DESTRUCTION OR WELL LOWERING

## PART 1 GENERAL

### 1.1 SUMMARY

A. Related Sections:
   1. Section 02315 (Excavation, Bedding, Backfill, and Resurfacing)
   2. Section 03002 (Concrete)

### 1.2 REFERENCES

| | | |
|---|---|---|
| A. | AWWA A100 | Water Wells |
| B. | Sonoma County Municipal Code Chapter 25B-5 | Abandoned Wells, Test Wells or Holes, and Destruction Wells |

### 1.3 SUBMITTALS

A. Product Data:
   1. Groundwater monitoring well locking vault
B. Quality Assurance/Control Submittals:
   1. Well destruction permits:
      a. 154 Fairview Lane (Marino)
      b. 157 Fairview Lane (Pedroni)
C. Work Plans:
   1. Well Destruction Plan:
      a. Type of well
      b. Location, depth, and size of well
      c. Known geological conditions
      d. Methods and materials for destroying and sealing well
   2. Well Lowering Plan:
      a. Address: 197 West Verano Avenue (Finish American Home Association)
      b. Type of well
      c. Methods and materials for lowering well

### 1.4 QUALITY ASSURANCE

A. The methods and materials used in destroying the well shall be such that the groundwater is protected from pollution or contamination.

## PART 2 - PRODUCTS

### 2.1 MATERIALS

A. Concrete: Per Section 03002 (Concrete).
B. Filler Material: Bedding material per Section 02315 (Excavation, Bedding, Backfill, and Re-surfacing)
C. Groundwater monitoring well locking vault:
   1. Rain tight monitoring well manhole
   2. Manufacturers and Models:
      a. PEMCO: Model 10310X12

b. Or Approved Equal

## PART 3 - EXECUTION

### 3.1 GENERAL

A. Two wells require destruction:
   1. Types and Locations:
      a. Potable water well at 157 Fairview Lane
      b. Groundwater monitoring well at 154 Fairview Lane
   2. Destruction procedure for both locations:
      a. Obtain separate well destruction permits for each location.
      b. Remove any obstructions in the well.
      c. Remove as much casing as possible without caving. Rip or perforate any remaining portion of the casing.
      d. Fill bottom of the well with inorganic filler material. Top 30 feet minimum shall be filled with concrete.
      e. Place materials to form a dense seal, free of voids.
      f. Place concrete in accordance with Section 03002 (Concrete).
   3. 157 Fairview Lane: Remove well piping connection to house to 12-inches below ground minimum or as otherwise required by well abandonment permit.

B. Well lowering:
   1. Type and Location: Groundwater monitoring well at 197 West Verano Avenue
   2. Lowering Procedure:
      a. Lower casing as needed
      b. Install locking well manhole with the top 2-inches above surrounding ground
      c. Place 12-inch wide concrete collar sloping down from edge of top of well manhole to level with ground surface.

C. Well destruction and adjustment shall conform to the requirements of:
   1. AWWA A100
   2. Sonoma County Municipal Code Chapter 25B-5

END OF SECTION

SECTION 02375

# HYDROSEED AND EROSION CONTROL BLANKET

## PART 1 GENERAL

### 1.1 SUMMARY

A. Section Includes:
   1. Erosion and sediment control measures to prevent erosion and sediment pollution into streams and waterways due to construction.
      a. These measures are in addition to the requirements of the Storm Water Pollution Prevention Plan (SWPPP) specified in Section 01500 (Temporary Facilities and Controls).

B. Related Sections:
   1. Section 01500 (Temporary Facilities and Controls)
   2. Section 02315 (Excavation, Bedding, Backfill, and Resurfacing)

### 1.2 REFERENCES

A. United States Department of Agriculture Federal Seed Act

### 1.3 SUBMITTALS

A. Product Data:
   1. Seed
   2. Fertilizer
   3. Mulch
   4. Stabilizer
   5. Erosion Control Blanket
   6. Geotextile Fabric

B. Samples:
   1. 6-inch x 6-inch sample of geotextile fabric

C. Quality Assurance/Control Submittals:
   1. Design Data:
      a. Hydroseed mix design
   2. Certificates:
      a. Certify each container of seed delivered will be labeled in accordance with Federal and State Seed Laws and equals or exceeds Specification requirements.
      b. Certification that seed meets percent purity and germination requirement
      c. Local regional source authentication for seed
   3. Manufacturer's Instructions:
      a. Erosion control blanket installation details

### 1.4 PROJECT CONDITIONS

A. Project Environmental Requirements:
   1. Weather conditions: Hydroseeding not permitted when wind velocities exceed 15 miles per hour, when the ground is frozen, or within 24 hours after a rain.

## 1.5 SCHEDULING

A. Place the hydroseed and erosion control blanket within 10 Days after completion of finish grading and no later than October 15, 2015, unless otherwise allowed by Owner, following completion of finish grading.

# PART 2 PRODUCTS

## 2.1 MANUFACTURERS

A. Geotextile Erosion Control Fabric: See Section 02315 (Excavation, Bedding, Backfill, and Resurfacing)
B. Biodegradable Erosion Control Blanketing:
   1. Materials: All materials shall be natural
      a. Netting: Coir, jute, or Approved Equal
      b. Thread: Cotton or Approved Equal
      c. Fiber matrix: Coir, certified weed free straw, or excelsior (fine curled wood fibers, usually aspen).
   2. Netting Design: Movable joints between the horizontal and vertical wines employing either leno weave, loose weave, or gauze weave netting designs.
   3. Manufacturers and Models
      a. North American Green, BioNet, C125BN
      b. East Coast Erosion Control, ECSC-2B
      c. RoLanka International, Inc., BioD-Straw Coco
      d. American Excelsior Company, AEC Premier Straw/Coconut
      e. Or Approved Equal
C. Fiber Rolls: Straw derived from rice or certified sterile wheat.

## 2.2 MATERIALS

A. Seed for hydroseeding:
   1. Vendor(s) supplied seed labeled per the California Food and Agriculture Code.
   2. Label seed as to percent purity and germination.
   3. Obtain seed from a vendor that can authenticate a local regional source (regional defined as original seed stock from Marin, Sonoma, Napa, or Mendocino Counties).
   4. Use the following blend of seed at the listed percent purity, percent germination, and pounds per acre:

| Name | Percent Purity | Percent Germination | Pounds Per Acre |
|---|---|---|---|
| Beardless Ryegrass (Leymus triticoides) | 90 | 80 | 10 |
| Meadow Barley (Hordeum brachyantherum) | 90 | 80 | 20 |
| Red Fescue (Festuca rubra) | 95 | 85 | 10 |
| ”Hykon” Rose Clover (Trifolium hirtum ‘Hykon’) | 90 | 80 | 10 |

B. Mulch: a fibrous cellulose mulch, containing no growth or germination inhibiting substances, and manufactured in such manner that when thoroughly mixed with seed, fertilizer, organic stabilizer, and water, in the proportions specified, it will form a

homogeneous slurry which is capable of being sprayed to form a porous mat. The fibrous mulch in its air-dry state contains not more than 10 percent by weight of water.

C. Stabilizer: an organic soil binder derived from *Plantago insularis*
D. Water: Clean and free of deleterious materials. Do not use reclaimed or recycled water.
E. Fertilizer: Water soluble with a nitrogen-phosphorus-potassium ratio of 16-20-0.

## PART 3 EXECUTION

### 3.1 HYDROSEED AREAS

A. Hydroseed disturbed ground surface areas and slopes, including but not limited to new embankment fill slopes.

### 3.2 SURFACE PREPARATION

A. See Section 02315 (Excavation, Bedding, Backfill, and Resurfacing).
B. Remove construction debris, weeds, and grasses from areas to be hydroseeded.
C. Limit preparation to areas which will be planted soon after.
D. Scarify top 3 inches of area to receive hydroseed just prior to hydroseeding operation.

### 3.3 HYDROSEED MIXTURE APPLICATION

A. Ensure that Owner is present for the initial mixing and application of the hydroseed mix.
B. Mulch: Apply at a rate of 2,000 lbs per acre.
C. Stabilizer: Apply at a rate of 100 lbs/acre.
D. Fertilizer: Apply at a rate of 300 pounds per acre.
E. Combine the water, seed, fertilizer, mulch, and stabilizer into a homogenous slurry, capable of being sprayed by application equipment.
F. Perform “free liquid” test to ensure suitability of mixture for Owner.

### 3.4 EROSION CONTROL BLANKET INSTALLATION

A. Install erosion control blanket on the slopes of the embankment fill area with slopes of 2:1 or greater, and where indicated, using soil staples as indicated and in accordance with manufacturer’s instructions after hydroseeding.

END OF SECTION

SECTION 02446

# TRENCHLESS INSTALLATION

## PART 1 GENERAL

### 1.1 SUMMARY

A. Section includes:
   1. Guided bore
   2. Pipe ramming
   3. Casing insulators
   4. End seals
   5. Monitoring Program

B. Related Sections:
   1. Section 02240 (Dewatering)
   2. Section 02255 (Shoring)
   3. Section 02315 (Excavation, Bedding, Backfill, and Resurfacing)
   4. Section 02535 (Sanitary Sewage Systems)
   5. Section 03002 (Concrete)
   6. Section 05095 (Field Pipe Welding)

### 1.2 REFERENCES

| | |
|---|---|
| A. ANSI/AWWA C209 | Cold-Applied Tape Coatings for the Exterior of Special Sections, Connections, and Fittings for Steel Water Pipelines |
| B. ANSI/AWWA C213 | Fusion-Bonded Epoxy Coating for the Interior and Exterior of Steel Water Pipelines |
| C. ASTM A53 | Standard Specification for Pipe, Steel, Black and Hot-Dipped, Zinc-Coated, Welded and Seamless |
| D. ASTM A139 | Standard Specification for Electric-Fusion (Arc)-Welded Steel Pipe (NPS 4 and Over) |
| E. Greenbook 202 | Masonry Materials |
| F. Greenbook 306-2.3 | Jacking Steel Casing |

### 1.3 SUBMITTALS

A. Product Data:
   1. Casing pipe
   2. Casing insulators
   3. End seal material
   4. Coating tape (if applicable)
   5. Sand

B. Quality Assurance/Control Submittals:
   1. Certificates:
      a. Certificate of compliance: Steel casing pipe
   2. Work Plans:
      a. Guided Bore and Pipe Ramming Plan consisting of drawings and written procedures describing in detail proposed installation method for each of the three (3) installation locations and directions, including, but not limited to:

1) A sketch of each construction site, including equipment staging areas for each of the three (3) installation locations and directions, approximate location of drill or casing entry and exit points in relation to the surrounding area
2) Proposed depth of installation, including at stream crossings and at locations that do not cross streams, and statement of streambed condition (subsurface strata and percent of gravel and cobble), and other subsurface materials, that support the depth of the bore
3) Boring and receiving pits
4) Dewatering
5) Shoring
6) Methods of sealing of pipe ramming bore and receiving pits against groundwater inflow and inflow from Agua Caliente Creek
7) Methods and materials of fencing or otherwise for the providing of safety at the pits to provide fall protection
8) Method of removing soils and installation of casing and carrier pipe
9) Size, capacity, and arrangement of equipment
10) Backstop
11) Method of providing support for the ramming machine in order to provide a constant design slope on the casing.
12) Methods of providing noise attenuation to minimize noise from pipe ramming and guided boring operation
13) Types of cutter heads
14) Layout of casing and carrier pipes
15) Methods of fusing and installing carrier pipes in casings
16) Method of monitoring and controlling line and grade
17) Detection of surface movement.
18) Discussion of potential for "frac-out" and Frac-Out Contingency Plan including:
    i. Name(s) and phone numbers of biological monitor(s), and crew supervisor(s)
    ii. Monitoring protocols (include biological monitoring and frac-out monitoring
    iii. Containment and clean-up plan (include staging location of vacuum trucks and equipment, equipment list, necessary hose lengths, special measures etc)
19) Pressure test protocol for casing and carrier pipe

b. Monitoring program related to bore and jack operations:
1) Submit monitoring program and obtain approval prior to the start of casing bore and jack operations.
2) Provide pre-construction monitoring in vicinity of casing bore and jack locations, in regards to building walls, floors, and foundations, driveways and sidewalks, storm drainage structures, sanitary sewer manholes, utility poles, exposed underground utilities, existing ground surfaces, and other facilities as needed, including but not limited to:
    (a) Pictures/videos:
        (i) Document pre-existing cracks and misalignments, and elevations, of building walls, floors, and foundations, driveways and sidewalks, storm drainage structures, sanitary sewer manholes, utility poles,

exposed underground utilities, and existing ground elevations prior to start of casing guided bore and jack operations.

(ii) Only enter existing buildings with an Owner escort, and only following submittal of a 48-hour pre-construction residence inspection request to Owner

(iii) Inside and outside building walls

(iv) Outside building foundations

(v) Sidewalks and driveways surfaces.

(vi) Storm drainage structures

(vii) Exposed underground utilities

(viii) Telephone/Power/Cable TV poles

(ix) Other as needed

(x) Submit copy of pictures/videos

(b) Provide crack gauge installation and initial measurement notations for buildings exteriors prior to start of bore and jack operations:

(i) Document pre-existing cracks as to location, length, width, and depth.

(ii) Provide crack gauges in addition to Owner's as required

(iii) Attach crack gauges to existing buildings using epoxy

(iv) Document and submit initial pre-construction conditions

(c) Provide monitoring of existing ground elevations along the casing guided bore and jack alignments:

(i) Install 18-inch long by ½-inch diameter rebar at 10 feet on-center extending approximately 1-inch above ground surface

(ii) Take initial elevation shots on top of each rebar

(iii) Submit initial top of rebar elevations shots

3. Provide on-going monitoring of existing building walls, floors, and foundations, driveways and sidewalks, storm drainage structures, utility poles, exposed underground utilities, existing ground surface, and other facilities in the vicinity of, and during, the steel casings guided bore and jack operations, including but not limited to:
   a. At a minimum, monitor facilities noted above under pre-construction monitoring, with the exception of existing ground surface elevations and foundation cracks, on a daily basis
   b. Monitor existing ground surface elevations and foundation cracks within 10 feet horizontally of the lead end of the casing on an hourly basis during bore and jack operations
   c. Submit monitoring information to Owner daily at end of the workday
   d. Keep on-going monitoring data up to date daily and/or hourly, as required herein, and available for Owner's inspection at all times during bore and jack operations
4. Provide post-monitoring cleanup following the completion of guided bore and jack operations, as follows:
   a. Upon direction of Owner:
      1) Remove concrete monitoring provisions and provide concrete patch as needed.
      2) Remove ground elevation monitoring rebar and plug holes with soil as needed
      3) Return private property within the vicinity of the bore and jacking operations to before-construction conditions.
   b. Post-construction property owner letter:

1) Submit draft letter that each private property owner will sign. Letter shall indicate that no damage was done to owner's private property during performance of Work.
2) Obtain signed post-construction property owner letters from each private property owner
3) If a private property owner will not sign standard letter, determine reason(s) for non-signature and provide property owner(s) name to Owner for negotiation with private property owner.

5. Manufacturer's Instructions:
   a. Casing insulator manufacturer's recommended installation instructions

## PART 2 PRODUCTS

### 2.1 MATERIALS

A. Steel Casing Pipe:
   1. Smooth walled steel pipe, welded or seamless, in accordance with ASTM A53 Grade B, or ASTM A139, Grade B
   2. Minimum yield strength of 35 ksi
   3. 36-inch diameter pipe dimensions:
      a. Nominal diameter: 36-inch
      b. Minimum Thickness:
         1) Coated: 0.781-inch
         2) Uncoated: 0.844-inch
      c. Length: As indicated
   4. 24-inch diameter pipe dimensions:
      a. Nominal diameter: 24-inch
      b. Minimum thickness:
         1) Coated: 0.781-inch
         2) Uncoated: 0.844-inch
      c. Length: As indicated
      d. Length: As indicated
   5. Shop coating: Per ANSI/AWWA C213
   6. Tape coating at joints: Per ANSI/AWWA C209

B. Anti-Floatation Casing Insulators:
   1. Manufacturers and Models:
      a. Calpico: Model M-12-SS
      b. Pipeline and Seal Insulation Inc. (PSI): Model C12G-2
      c. Or Approved Equal
   2. Skids: 2-inch wide polyethylene or phenolic

C. End Seals:
   1. Manufacturers and Models:
      a. Calpico: Model C Pull-on End Seal with 316 stainless steel bands.
      b. Pipeline and Seal Insulation Inc. (PSI): Model C Custom Pull-On End Seal with 316 stainless steel bands:
      c. Or Approved Equal

D. Crack Gauges:
   1. Manufacturers and Models:
      a. Buildera: Model Crackmon (Registered Name) 4020A Foundation Crack Monitor

1) Website: http://www.buildera.com/crackmon-4020a-2d-crack-monitor/

b. Or Approved Equal

## PART 3 EXECUTION

### 3.1 PITS

A. Excavate and backfill pits in accordance with Paragraph 3.1 C of Section 02315 (Excavation, Bedding, Backfill, and Resurfacing.
B. Pits: Located a minimum distance of 10 feet from the top of creek banks.
C. Shoring: In accordance with Section 02255 (Shoring)
D. Dewater jacking and receiving pits, as necessary, in accordance with Section 02240 (Dewatering)
E. Temporary chain link fencing per Section 02315 (Excavation, Bedding, Backfill, and Resurfacing) shall be installed around pits that cannot be plated during non-working hours. Plate other pits during non-working hours to preclude any wildlife from entering those pits.

### 3.2 GUIDED BORING OPERATION

A. Owner will provide a qualified biological monitor to monitor the guided bore pit, receiving pit, and observation pit excavation activities near creeks and significant trees, and other guided bore activities. Provide written notification to Owner one week prior to commencing guided boring excavation activities.
B. If a "frac-out" occurs, Work shall cease and the biological monitor will contact DFG immediately. If a frac-out occurs implement the Frac-Out Contingency Plan as directed by the biological monitor.
C. Install 2-inch by 2-inch by 12-inch minimum depth survey hubs at 10 feet on centers along the guided bore paths with surveyed top of hub elevations. Record the top of hub elevations prior to starting of guided bore casing installation. Monitor and record the top of hub elevations as the guided bore casing reaches each survey hub and also at the end of the guided bore casing installation. Provide copies of survey information to Owner prior to commencement of boring, during boring, and at completion of boring operations. Remove and dispose of hubs when allowed by Owner in writing.
D. Provide temporary noise damper barriers/enclosures/structures (e.g. plywood with sound absorbing materials, sandbags or other materials) around boring equipment, and other appurtenant noisy equipment to minimize noise.
E. Installation of casings shall be done using a theodolite guidance and pilot boring system as used with Akkerman Guided Boring Machines or Approved Equal.
F. Perform boring and jacking operations simultaneously.
G. Bentonite or other chemical lubricants shall not be used. Only de-chlorinated water shall be used to reduce friction at the drill head.
H. Installation: Continuous until the casing pipe is in final position; line and grade shall be carefully maintained.
I. Butt weld additional sections of casing pipe to be water-tight and in accordance with Section 05095 (Field Pipe Welding). If installing coated steel casing, tape joints in accordance with ANSI/AWWA C209.
J. Casing installation shall produce no upheaval, settlement, cracking, movement or distortion of the existing ground.
K. Guided bore and jack installations: Minimum bored hole diameter, essentially the same as the outside diameter of the casing pipe plus the thickness of any protective coating. If voids

should develop, or if the bored diameter is greater than the outside diameter of the pipe by greater than one inch, fill the space by grouting or other remedial measures as approved by Owner.

L. Casing pipe:
   1. Adequately protected to prevent crushing or other damage under jacking pressure.
   2. Constructed to prevent leakage of any substance from, or into the casing throughout its length.

M. Carrier pipe: Fuse and jack HDPE carrier pipe into casing.

## 3.3 PIPE RAMMING

A. Owner will provide a qualified biological monitor to monitor the pipe ramming bore and receiving pit excavations and actual pipe ramming activities at the Agua Caliente Creek Crossing. Provide written notification to Owner one week prior to commencing pipe ramming pits excavation activities.

B. Provide temporary noise damper barriers/enclosures/structures (e.g. plywood with sound absorbing materials, sandbags or other materials) around ramming equipment, and other appurtenant noisy equipment to minimize noise.

C. If a "frac-out" occurs during actual pipe ramming Work, Work shall cease and the biological monitor will contact CDFW immediately. If a frac-out occurs, implement the Frac-Out Contingency Plan as directed by the biological monitor.

D. Each pipe section shall be rammed forward as the excavation progresses in such a way to provide complete and adequate ground support at all times.

E. A hammer frame shall be positioned to develop a uniform distribution of ramming forces around the periphery of the pipe.

F. Ensure that the launch seal is properly designed and constructed. Ensure correct alignment when setting the pipe guard rails in the pit on the concrete slab. At a minimum, provide a 6-inch thick concrete slab at bottom of ramming pit to provide support for ramming machine and constant designed slope of rammed casing

G. The soil transportation method shall be capable of handling and removing materials identified in the geotechnical report.

H. Bentonite or other chemical lubricants shall not be used. Only de-chlorinated water shall be used to reduce friction at the lead end of the lead casing. Weld a minimum 0.50-inch diameter lube line to each section of the casing to carry the water lubricant to the lead casing end.

I. Butt weld additional sections of casing pipe to be water-tight and in accordance with Section 05095 (Field Pipe Welding). If installing coated steel casing, tape joints in accordance with ANSI/AWWA C209.

J. Casing installation shall produce no upheaval, settlement, cracking, movement or distortion of the existing ground.

K. Leave plug of 20 linear feet of spoil in the lead end of the casings until the casings are totally in place

L. Fabricate and weld a 6-inch long by minimum 0.50 –inch thick cutting band on to the leading end of the leading casing. The overcut on the pipe shall not exceed 1 inch without the approval of the owner.

M. Casing pipe:
   1. Adequately protected to prevent crushing or other damage under the driving force.
   2. Constructed to prevent leakage of any substance from, or into the casing throughout its length.

N. Carrier pipe: Fuse and jack HDPE carrier pipe into casing.

**3.4 CASING INSULATORS**

A. Install per manufacturer's recommended installation instructions.
B. Provide graduated heights of insulators as required to adjust carrier pipe inside casing as required to meet designed slope of carrier pipe.

**3.5 END SEALS**

A. Once carrier pipe has been installed and following pressure testing, install end seals.
B. Provide pipe ports (minimum 2" diameter) at each end for pressure testing of casing.

**3.6 CARRIER PIPE**

A. HDPE fused pipe as indicated, per Section 02535 (Sanitary Sewage Systems).

**3.7 FIELD QUALITY CONTROL**

A. Tests:
   1. Thoroughly clean the interior of the casing pipe of adhering matter and other debris, to the approval of the Owner.
   2. Casing pipe shall be air tested to a pressure of 10 psi to ensure water-tightness.
   3. Casing pipe will have passed if time observed for pressure to drop 0.5 psig is greater than 30 minutes.
   4. Contractor shall perform tests. Furnish necessary personnel, compressors, hose, supplies, equipment bulkheads, and additional equipment needed to perform tests specified.

END OF SECTION

SECTION 02515

# WATER PIPE

## PART 1 GENERAL

### 1.1 SUMMARY

A. Section Includes:
   1. Water pipe and fittings
B. Related Sections:
   1. Section 02315 (Excavation, Bedding, Backfill, and Resurfacing)
   2. Section 02535 (Sanitary Sewer Systems)
   3. Section 03002 (Concrete)

### 1.2 DEFINITIONS

A. VOMWD: Valley of the Moon Water District
B. Leakage: The quantity of water to be supplied into the newly laid pipe, or any valved section of it, necessary to maintain the specified leakage test pressure after the pipe has been filled with water and the air expelled.

### 1.3 REFERENCES

| | | |
|---|---|---|
| A. | ASTM B88 | Seamless Copper Water Tube |
| B. | ASTM D2737 | Polyethylene Tubing |
| C. | ASTM 2939 | Emulsified Bitumens Used as Protective Coatings |
| D. | AWWA C800 | Underground Service Line Valves and Fittings |
| E. | AWWA C901 | Polyethylene (PE) Pressure Pipe and Tubing, ½ In. (13mm) Through 3 In. (76mm), for Water Service |
| F. | VOMWD Standard Plan 1A | Water Services for 5/8 , 3/4 , and 1 inch Meters |
| G. | California Department of Health Services | Criteria for Separation of Water Mains and Sanitary Sewer |
| H. | State of California | California Plumbing Code |

### 1.4 SUBMITTALS

A. Product Data:
   1. Pipe
   2. Pipe fittings
   3. Tracer wire
   4. Transition and straight couplings
   5. Concrete mix design for concrete collars for valve boxes and meter vaults; concrete thrust blocks and anchors; driveways.
   6. Drain rock
B. Water System Work Plans:
   1. Trench dewatering and disposal procedures
   2. Hydrostatic testing procedures
C. Quality Assurance/Control Submittals:
   1. Certificates that materials provided comply with Contract Documents
      a. Identify the pipe and fittings by manufacturer's name, lot number, and date tested by a State-certified materials testing laboratory.

b. Testing: Performed in a State-licensed materials testing laboratory where the testing standards meet or exceed State of California testing standards.
c. Provide Owner and private property owner with a copy of necessary paperwork completed by the certified tester within 24 hours of connection.

2. Manufacturer's Instructions: Pipe installation

### 1.5 DELIVERY, STORAGE, AND HANDLING

A. Packing, Shipping, Handling, and Unloading: After delivery to the Site, carefully unload materials and protect against breakage
B. Storage and Protection:
1. Protect against breakage rusting, accumulation of foreign matter, disintegration, and injury.
2. Store pipe stockpiled on Site with the ends covered to prevent the entrance of foreign matter.

## PART 2 PRODUCTS

### 2.1 GENERAL

A. Pipe: Marked with manufacturer's name, pipe size, cell classification, and manufacturer's date code
B. Follow test specified by ASTM when no method of test for material is specified
C. Pipe for tie-ins: No smaller than existing water main to which each tie-in is made and of indicated types

### 2.2 TRACER WIRE

A. See Section 02535 (Sanitary Sewer Systems)

### 2.3 POLYETHYLENE 1 INCH WATER SERVICE LATERAL

A. 1 Inch Polyethylene Tubing:
1. Conform to ASTM D2737 and AWWA C901
2. High Density Polyethylene 3408
3. Color: Blue
4. SDR 9
5. 200 PSI
B. Fittings:
1. Brass 90 degree ell (compression with insert stainless steel stiffener by female iron pipe thread)
2. Conform to AWWA C800.

### 2.4 CONCRETE

A. See Section 03002 (Concrete)

### 2.5 DRAIN ROCK, BEDDING, BACKFILL, AGGREGATE BASE, TEMPORARY AND PERMANENT ASPHALT RESURFACING

A. See Section 02315 (Excavation, Bedding, Backfill and Resurfacing)

## PART 3 EXECUTION

### 3.1 GENERAL

A. Contractor is prohibited from operating gate valves or fire hydrants on VOMWD system. Provide minimum 48-hour notification to Owner for operation of gate valves or fire hydrants.
B. Water construction shall conform to the requirements of State Health "Criteria for Separation of Water Mains and Sanitary Sewers" and the State UPC.

### 3.2 TRENCH EXCAVATION

A. See Section 02315 (Excavation, Bedding, Backfill, and Resurfacing)

### 3.3 PIPE BEDDING, BACKFILL, AGGREGATE BASE, AND ASPHALT RESURFACING

A. See Section 02315 (Excavation, Bedding, Backfill and Resurfacing)

### 3.4 PIPE INSTALLATION

A. General:
1. Carefully lower pipe, fittings, and valves into trench in such a manner as to prevent damage to pipe coatings. Under no circumstances shall pipe or accessories be dropped or dumped into the trench.
2. Before lowering and while suspended, inspect pipe for defects. Reject any defective, damaged, or unsound pipe and provide sound material.
3. Cut pipe for inserting valves, fittings, or closure pieces in a neat manner without damage to pipe following pipe manufacturer's written instructions and/or written recommendations.
4. Paint exposed nuts, bolts and threads (except stainless steel) with bitumastic paint conforming to ASTM 2939, or Approved Equal, using either brush or spray application method after nuts are tightened.
5. At times when pipe laying is not in progress, close open ends of pipe that has been laid with a mechanical plug or other means approved by Owner.
6. When it is necessary to avoid obstructions or when long radius curves are permitted, the amount of deflection shall not exceed the maximum recommended by the pipe manufacturer.
7. Remove any visible evidence of contamination, dirt, and foreign material from inside and outside of each length of pipe before pipe is lowered into position in the trench. Keep pipe clean both during and after laying.
8. Excavations:
   a. Expose ends of existing pipe and locate sewer laterals to determine individual lines and grades.
   b. Install new service lateral with 24 inches minimum cover at locations with potential vehicular areas (roadways, driveways, and yards that are not protected by fences)
   c. Cover is the distance from the top of the pipe to final finished grade measured directly over the pipe.
   d. Where minimum cover is less than standard or greater than 8 feet, permission from Owner is required.
   e. Where standard cover cannot be maintained, such as at the crossing of sewer or any other utility, either an undercrossing or overcrossing will be chosen by Owner based upon Owner's evaluation. Evaluation will include the assessing need for higher

class pipe, use of controlled density backfill as pipe encasement, and ability to meet California "Criteria for Separation of Water Mains and Sanitary Sewers".

B. New 1 inch water service:
   1. Install in accordance with VOMWD standard plan 1A, except provide 24 inches minimum cover in traffic areas.
   2. Install 1 inch polyethylene water service and installed new 5/8-inch water meter to the existing well-to-house connection as indicated.
   3. Coordinate this Work with Subcontractor, if any, property owner, and VOMWD to provide minimum customer out-of-service time and inconvenience.
   4. VOMWD water service will not be allowed to be turned on until after well connection to the house has been abandoned or removed.
   5. Notify customer before transferring from well to VOMWD water. After transfer, open hose bibb to flush out air and sediment and then turn on house valve.

## 3.5 TRACER WIRE

A. Lay on top of and along the entire length of non-metallic service laterals.
B. Extend to the surface at valve locations, at connection to house, and at meter boxes sufficiently for locator equipment to be attached.
C. Fasten tracer wire to top of pipe with duct tape at approximately 10-foot intervals.

## 3.6 CONCRETE

A. See Section 02315 (Excavation, Bedding, Backfill and Resurfacing)

## 3.7 FINAL SERVICE CONNECTIONS

**A.** General:
   1. Make application and pay fees for water service connections to VOMWD.
   2. Coordinate through Owner with VOMWD to install water service connections.

B. Hot tap connections smaller than 4 inches:
   1. VOMWD will provide all labor, equipment, and materials to make service hot tap to existing pressurized mains.

## 3.8 TESTING

A. Pressure testing of water services shall be done in accordance with Section 6.09.4 (Testing) of the California Plumbing Code.

## 3.9 FIELD QUALITY CONTROL

A. Owner and VOMWD inspectors must be present during final service connection operations.

END OF SECTION

SECTION 02535

# SANITARY SEWAGE SYSTEMS

## PART 1 GENERAL

### 1.1 SUMMARY

A. Section Includes:
1. Sewer pipe
2. Testing of pipe
3. Sewage bypass pumping and/or diversion system
4. Backflow Valves
5. Pipe installation
6. Gate valves
7. Trench dams
8. Couplings
9. Tracer wire
10. Boxes
11. Flexible expansion joints
12. Abandonment and removal of existing sewer
13. Removal of trunk sewer over Agua Caliente Creek
14. Appurtenances

B. Related Sections:
1. Section 02240 (Dewatering)
2. Section 02315 (Excavation, Bedding, Backfill, and Resurfacing)
3. Section 02536 (Manholes, Frames, and Covers)
4. Section 02446 (Trenchless Installation)

### 1.2 REFERENCES

| | | |
|---|---|---|
| A. | ASTM D3034 | Standard Specification for Type PSM Poly Vinyl Chloride (PVC) Sewer Pipe and Fittings |
| B. | ASTM D3035 | Standard Specification for Polyethylene (PE) Plastic Pipe (SDR-PR) Based on Outside Diameter |
| C. | ASTM D3212 | Standard Specification for Joints for Drain and Sewer Plastic Pipes Using Flexible Elastomeric Seals |
| D. | ASTM D3350 | Standard Specification for Polyethylene Plastics Pipe and Fittings Materials |
| E. | ASTM F477 | Standard Specification for Elastomeric Seals (Gaskets) for Joining Plastic Pipe |
| F. | ASTM F679 | Standard Specification for Poly Vinyl Chloride (PVC) Large-Diameter Plastic Gravity Sewer Pipe and Fittings |
| G. | ASTM F714 | Standard Specification for Polyethylene (PE) Plastic Pipe (DR-PR) Based on Controlled Outside Diameter |
| H. | ASTM F949 | Standard Specification for Poly Vinyl Chloride (PVC) Corrugated Sewer Pipe With Smooth Interior and Fittings |
| I. | ASTM F1336 | Standard Specification for Poly Vinyl Chloride (PVC) Gasketed Sewer Fittings |

| | | |
|---|---|---|
| J. | AWWA C219 | Standard Specification for Bolted, Sleeve-Type Couplings for Plan-End Pipe |
| K. | AWWA C203 | Standard Specification for Coat-Tar Protective Coatings and Linings for Steel Water Pipelines - Enamel and Tape – Hot Applied. |
| L. | AWWA C227 | Standard Specification for Bolted, Split-Sleeve Restrained and Non-Restrained Couplings for Plan-End Pipe |
| M. | Greenbook 500-1.1.4 | Cleaning and Preliminary Inspection |
| N. | SCWA Design and Construction Standards for Sanitation Facilities Drawing No. 100-A | Sanitary Sewer – Standard Manhole |
| O. | SCWA Design and Construction Standards for Sanitation Facilities Drawing No. 104 | Sanitary Sewer – Standard Manhole Frame and Cover |
| P. | SCWA Design and Construction Standards for Sanitation Facilities Drawing No. 109 | Sanitary Sewer - Pipe- Crossing Sewer Pipe and Water Main |
| Q. | SCWA Design and Construction Standards for Sanitation Facilities Drawing No. 110 | Sanitary Sewer - Miscellaneous Pipe Crossings |
| R. | SCWA Design and Construction Standards for Sanitation Facilities Drawing No. 111 | Sanitary Sewer - Valve Installation Detail |
| S. | SCWA Design and Construction Standards for Sanitation Facilities Drawing No. 113 | Sanitary Sewer - Abandoned Pipe Detail |
| T. | SCWA Design and Construction Standards for Sanitation Facilities Drawing No. 114 | Sanitary Sewer - Plastic Pipe Deflection Mandrel |
| U. | SCWA Design and Construction Standards for Sanitation Facilities Drawing No. 116 | Sanitary Sewer - Air Test – Allowable Leakage |

| | | |
|---|---|---|
| V. | SCWA Design and Construction Standards for Sanitation Facilities Drawing No. 121 | Sanitary Sewer - 4 Inch and 6 Inch Service Lateral and Cleanout |
| W. | SCWA Design and Construction Standards for Sanitation Facilities Drawing No. 127 | Sanitary Sewer - Backflow Check Valve Installation |
| X. | UNI-B-6 Unibell PVC Pipe Association | Recommended Practice for Low-Pressure Air Testing of Insulated Sewer Pipe |

## 1.3 DEFINITIONS

A. HDPE: High Density Polyethylene

## 1.4 SUBMITTALS

A. Product Data:
   1. Pipe and fittings:
      a. PVC
      b. Ductile Iron Pipe
      c. HDPE pipe
   2. Flexible Expansion Joints
   3. Sewer lateral cleanout box
   4. Mandrels
   5. Bolted couplings
   6. Flexible rubber couplings
   7. Coal tar based tape
   8. Detectable warning tape
   9. Tracer wire
   10. Backflow Valves
   11. Gate Valves
   12. Water stops
   13. Pipe plugs
B. Quality Assurance/Control Submittals:
   1. Certificates:
      a. Certificate that materials furnished comply with Contract Documents.
   2. Work Plans:
      a. Pipeline testing procedures.
      b. Sewer trunk main abandonment procedures:
         1) Proposed sand slurry storage volumes
         2) Bulkhead designs
         3) Flow control
      c. Sewage bypass pumping or diversion plan:
         1) Drawings, data, and operation schedule
         2) Flow calculations
         3) Flow rates:
            (a) Peak wet weather flow rate: 9.3 million gallons per day (6,460 gallons per minute)

(b) Night time dry weather low flow rate: 0.375 million gallons per day (260 gallons per minute)
(c) Night time dry weather diurnal high flow rate, 2 times low flow rate: 0.75 million gallons per day (520 gallons per minute)
4) Capacity of pumps and standby units
5) Size and location of discharge lines
6) Emergency response plan to be followed in the event of a failure of the sewage bypass pumping and/or diversion system
d. Procedures to connect new trunk sewer to existing trunk sewer
e. Procedures to connect new side sewer main to existing trunk sewer

C. Quality Assurance/Control Submittals:
1. Manufacturer's written instructions:
a. Pipe installation
b. Coupling installation
c. Flexible coupling installation
d. Handling of pipe
2. Testing equipment calibration information:
a. Mandrel
b. Proving Ring
c. Pressure Gauges

D. Installation, Operation, and Maintenance Manual:
1. Backflow Check Valve
2. Gate Valve

E. Close out Submittals:
1. Post Construction Video Inspection Records:
a. Provide 3 separate copies each of video on digital video disks (DVD) and log reports as outlined in Paragraph 3.18F of this Section 02535

## 1.5 SEWAGE BYPASS PUMPING AND DIVERSION SYSTEM DESCRIPTION

A. Design Requirements:
1. Provide and maintain power, at least one primary service pump and one standby pump, appurtenances, and bypass piping at each bypass and/or diversion location required to maintain existing flows and services.
2. Portable piping system of sufficient size to maintain the flow velocity at less than 6 feet per second but greater than 2 feet per second.
3. Rated for a pressure of not less than 50 psi.
4. Pumps: Electric motor-driven or gasoline engine-driven and rated for raw sewage service. Noise generated by the bypass pumping system shall not exceed 86 decibels.
5. Above-ground piping shall not block vehicular or pedestrian traffic.

B. Performance Requirements:
1. Existing collection system shall remain in operation throughout replacement of the system except as otherwise approved by Owner in writing.
2. Provide sewage bypass pumping and/or diversion of the existing trunk system mains, side mains, and lateral service connections to ensure acceptable completion of the trunk system replacement.
3. Free of leaks.

## 1.6 DELIVERY, STORAGE, AND HANDLING

A. Pipe:

1. Handle pipe in accordance with manufacturer's written instructions.
   a. Provide and use proper implements, tools and facilities for the safe and proper handling and protection of the pipe.
   b. Handle in such a manner as to avoid damage to the pipe material or any coating, especially to the ends.
2. Prevent damaging the pipe by heavy loads.
3. Replace damaged pipe.

B. Storage and Protection:
1. Store in a safe location out of the traveled way behind barricades and protect from the elements where damage may result from exposure.
2. Protect pipe placed along the pipeline route behind barricades to prevent damage to pipe or injury to workers or public.

## PART 2 PRODUCTS

### 2.1 GENERAL

A. Pipe: Marked with manufacturer's name, pipe size, standard dimension ratio (SDR), cell classification, ASTM designation and manufacturer's date code.

### 2.2 MATERIALS

A. HDPE Solid Wall Sewer Pipe and Fittings:
1. Manufacturers and Models:
   a. Plexco as manufactured by Chevron Chemical Company
   b. Driscopipe 1000 as manufactured by Phillips Driscopipe, Inc.
   c. Or Approved Equal
2. Pipe and fittings shall be solid wall gravity sewer pipe with fused joints for the conveyance of domestic sewage.
3. Pipe and fittings shall have a minimum SDR 17 for 12-inch and 24-inch OD, and SDR 41 for 30-inch OD, and meet the requirements of ASTM D3035 (1/2 inch to 24 inch outside diameter) and ASTM F714 (3 inch to 48 inch outside diameter).
4. Molded HDPE fittings: ASTM D3261
5. Pipe and Fittings Material: HDPE Cell Classification: ASTM D3350 - 345464C cell class per D3350
6. Plastic Pipe Institute Designation: PE 3408 HDPE pipe grade resin piping system
7. Joints:
   a. HDPE pipe and fittings shall have butt fused joints in conformance with ASTM D3261
   b. No solvent cement joints will be permitted.

B. Small Diameter (4 inch to 15 inch) PVC Sewer Pipe:
1. Manufacturers and Models:
   a. PVC Gravity Sewer as manufactured by Vinyltech
   b. Sani-21 Sewer as manufactured by Diamond Plastics
   c. Or Approved Equal
2. Pipe: Plastic gravity sewer pipe with integral wall, bell, and spigot joints for the conveyance of domestic sewage.
3. Pipe and fittings: Meet wall and strength minimums of SDR 26, and the requirements of ASTM D3034.
4. Pipe: PVC SDR 26.

5. Pipe dimensions: Conform to ASTM D3034, Table 1.
6. Joints:
   a. Sewer pipe and fittings: Bell and spigot type joints with elastomeric sealing rings in conformance with ASTM D3212 and ASTM F1336
   b. No solvent cement joints will be permitted

C. 4-inch and 6-inch lateral cleanout box and cleanout plug:
1. 4-inch cleanout box:
   a. Manufacturers:
      1) D&L Supply: M8030 with lid marked "Sewer"
      2) Geneco: CC4 with lid marked "Sewer"
      3) South Bay Foundry: B 5230 with lid marked "Sewer"
      4) Or Approved Equal
2. 6-inch cleanout box:
   a. a. Manufacturers:
      1) Christy: G-5 with lid marked "SEWER"
      2) D&L Supply: M8030 with lid marked "SEWER" South Bay Foundry: 1246-S CPH with lid marked "SEWER"
      3) Phoenix Iron Works: P-2501 CPH with lid marked "SEWER"
      4) Or Approved Equal
3. 4-inch cleanout plug:
   a. Manufacturers:
      1) ETCO Specialty Products, Inc.: Flush Mount "T" Cone Plug Model CO-402C
      2) Jones Stephens Corporation "T" Cone Plug Model T3440
      3) Multi Fittings 4-Inch Flush Plug Model 40492
      4) Or Approved Equal
4. 6-inch cleanout plug:
   a. Manufacturers:
      1) ETCO Specialty Products Inc.: Flush Mount "T" Cone Plug Model CO-602C
      2) Jones Stephens Corporation "T" Cone Plug
      3) Multi Fittings 4-Inch Flush Plug Model 40458
      4) Or Approved Equal

D. Bolted Couplings:
1. Manufacturers and Models:
   a. APAC 300 series
   b. Powerseal 3500 series
   c. Romac 500 series
   d. Smith-Blair 441 series
   e. Or Approved Equal
2. Size of couplings: Compatible with the outside diameter of the pipes on which the coupling is installed.
3. Bolts: Stainless steel.
4. Lengths: Standard, unless otherwise indicated.

E. Restrained couplings for HDPE pipe:
1. Conform to AWWA C227.
2. Ductile iron.
3. Similar to:
   a. EBAA Iron Megalug
   b. Star Pipe Products Stargrip 4000

    c. Or Approved Equal

F. Flexible Rubber Couplings:
    1. Manufacturers:
        a. Fernco
        b. Indiana Seal
        c. Mission Clay
        d. Or Approved Equal
    2. Type 316 stainless steel bands
    3. Type 316 stainless steel shear rings

G. Flexible Expansion Joints:
    1. Manufacturers and Models
        a. EBAA Iron Flex-Tend
        b. Star Pipe Products Starflex 5000
        c. Or Approved Equal
    2. Double ball with 30" maximum expansion with flanged ends for 30″ size, and 8″ maximum expansion with flanged ends for 12″ and 24″ sizes

H. Fabricated Steel Flanged Coupling Adapters:
    1. Manufacturers and Models
        a. Smith-Blair 911
        b. Romac FC400
        c. Or Approved Equal
    2. AWWA C219 with 316 stainless steel bolts and nuts
    3. Separate dissimilar metals with dielectric flange gaskets and dielectric bolt bushings

I. Detectable Warning Tape:
    1. Minimum Dimensions: 5 mils thick x 6 inches wide
    2. Three layer construction with middle foil layer for inductive and conductive locating
    3. Color: Green in accordance with American Public Works Association (APWA) National Color Code
    4. Bold black lettering to convey that sewer line is buried below

J. Tracer wire:
    1. Number 12 AWG solid copper wire with THHN insulation.

K. Mandrel:
    1. Conform to SCWA Design and Construction Standards for Sanitation Facilities Drawing No. 114

L. Backflow Valve:
    1. Conform to SCWA Design and Construction Standards for Sanitation Facilities Drawing No. 127

M. Gate Valve:
    1. Conform to SCWA Design and Construction Standards for Sanitation Facilities Drawing No. 111

N. Coal-tar based tape:
    1. AWWA C203 hot applied coat-tar based tape
    2. Or Approved Equal

O. Double Rubber Water Stop:
    1. Manufacturers:
        a. Simtech
        b. Plexco
        c. Water stop grouting rings: Press-Seal Gasket Corp

d. Fernco
e. Or Approved Equal

P. Traffic Box and Cover for tracer wire:
1. General:
a. Vandal proof cast iron cover with hold down screws
b. Mark "TRACER WIRE" permanently on cover
2. Manufacturers and model numbers:
a. Christy G5
b. Oldcastle Precast G5
c. BES G5
d. Or Approved Equal

Q. Flexible Expansion Joints:
1. Manufacturer/Model:
a. EBAA Iron/Flex Tend
b. Star Pipe Products/Starflex 5000
c. Or Approved Equal
2. Materials
a. Flanged ends
b. 12 inch and 24 inch expansion joints, maximum 8 inch expansion
c. 30 inch expansion joint, maximum 30 inch expansion
d. Polyethylene baggy

### 2.3 BEDDING AND BACKFILL MATERIAL

A. See Section 02315 (Excavation, Bedding, Backfill, and Resurfacing).

## PART 3 EXECUTION

### 3.1 EXAMINATION

A. Site Verification of Conditions:
1. If Contractor suspects pipe cannot be installed in accordance with pertinent codes and regulations, the Contract Documents, and the referenced standards, immediately notify Owner.
2. Do not proceed with installation in the areas in question until issues have been fully resolved.

### 3.2 SEWAGE BYPASS PUMPING AND DIVERSION SYSTEMS

A. Notify Owner two Business Days prior to commencing the bypass pumping operation.
B. Bypass pumping during non-working hours is prohibited unless otherwise approved by Owner in writing.
C. Ensure that the sewer system is totally operable at the end of each workday.
D. Prior to pumping any raw sewage, fill bypass pumping system with potable water and visually inspect for any leaks in the system. Should any leaks be identified, drain the system and repair leaks. Repeat testing until there are no leaks in the system.
E. Enclose pumped sewage in a hose or pipe that is protected from traffic and redirect into a downstream sanitary sewer collection system.
F. Dumping or free flow of sewage on private property, gutters, streets, sidewalks, or into storm sewers is prohibited.

G. After Work is completed and accepted by Owner, return flow to the newly constructed sewer and remove temporary equipment.
H. Take necessary precautions to ensure that no private properties are subjected to a sewage backup or spill.

## 3.3 PIPE INSTALLATION

A. General:
   1. Install pipe in accordance with manufacturer's written instructions, as specified herein, in accordance with the requirements of ASTM D2321, and as indicated.
   2. Install 6-inch diameter side sewer in accordance with SCWA Design and Construction Standards for Sanitation Facilities Drawing No. 121 including tracer wire over the new side sewer from property line cleanout to gate valve, from gate valve to backflow preventer manhole, and from backflow preventer manhole to Siphon Structure "B." Bring tracer wire to surface in gate valve riser, in backflow preventer manhole, and in a traffic box next to Siphon Structure "B."
B. Lay pipe continuously upgrade, with bell of pipe forward.
   1. Fuse pipe joints and fittings either above ground, or in the trench, whichever is required
   2. Lay each length of pipe on firm bed, with true bearing for its entire length.
C. Lay pipe accurately to lines and grades indicated.
   1. Carefully center pipe such that, when laid, it will form a sewer with a uniform invert.
   2. Keep trenches water-free and as dry as possible during bedding, laying, and jointing until backfilled in accordance with Section 02240 (Dewatering).
D. Maintain grades, especially on flatter sections of 0.5 percent or less. Flat or reverse grades will not be accepted.
E. Sewer piping crossing water mains shall conform to SCWA Design and Construction Standards for Sanitation Facilities Drawing No. 109.
F. Sewer piping crossing storm drain piping and other utilities shall conform to SCWA Design and Construction Standards for Sanitation Facilities Drawing No. 110.
G. As the Work progresses, clean the interior of the sewer of dirt and debris. At times when Work is not in progress, close open ends of pipe and fittings.
H. Carefully install the pipe to prevent damage. Under no circumstances shall pipe be dropped or dumped.
I. Cut pipe for fused fittings, closure pieces, and as otherwise required, without damaging the pipe. Leave a smooth end at right angles to the axis of the pipe. Dress cut ends of push-on joint pipe by beveling, in accordance with the coupling manufacturer's written instructions.
J. Install magnetic detectable warning tape in accordance with manufacturer's written recommendations.
K. Connections to manholes: SCWA Design and Construction Standards for Sanitation Facilities Drawing No. 100-A as indicated.

## 3.4 BACKFLOW CHECK VALVE

A. Construct backflow check valve in manhole as indicated in accordance with SCWA Design and Construction Standards for Sanitation Facilities Drawing No. 127

## 3.5 GATE VALVE

A. Construct 6 inch gate valve in accordance with SCWA Design and Construction Standards for Sanitation Facilities Drawing No. 111.

## 3.6 TRENCH DAMS

A. Construct trench dams for trenched piping as indicated.

## 3.7 COUPLINGS

A. Use flexible couplings to attach pipes of different materials and different outside diameters.
B. Wrap couplings with two layers of coal tar based tape, minimum 10 mils thickness.
C. Match invert elevation of pipe ends.

## 3.8 FLEXIBLE EXPANSION JOINTS

A. Install as indicated and in accordance with manufacturer's instructions

## 3.9 MANHOLE CONNECTIONS

A. See Section 02536 (Manholes, Frames, and Covers)
B. Fuse wall anchors on end of HDPE inlet and outlet pipes for cast-in-place manhole bases as indicated
C. Fuse bends into pipe for laying through cast-in-place manhole bases as indicated.

## 3.10 CLEANING

A. Keep pipe clean during the installation.
   1. After pipe is to grade and is complete, flush and ball the pipe progressively downstream to clean out any accumulated debris.
   2. If Contractor digs out any sections subsequent to cleaning where debris could enter the line, flush and ball the line again through the disturbed section.
B. Water used for cleaning may be discharged into downstream sewer manhole.
   1. If water used for cleaning is not discharged into downstream sewer manhole, dispose of water in accordance with applicable federal, state, and local regulations.
C. Remove internal debris from the sewer line in accordance with Greenbook 500-1.1.4.
   1. Remove debris from the collection system at the downstream manhole, unless otherwise allowed by Owner.
   2. No material shall be allowed to move downstream in the collection system.

## 3.11 DEFLECTION TESTING FOR PLASTIC PIPE

A. Perform a mandrel test at the end of each Day, through the pipe installed for that Day.
B. Pull a "go-no-go" mandrel through the pipe prior to acceptance of pipe by Owner.
C. After placement and densification of backfill and prior to the placing of permanent pavement, clean pipe and then mandrel to measure for obstructions (deflections and joint offsets).
D. Test by hand-pulling a 9-spline-rigid mandrel through mainline sewer pipe.
   1. Mechanical means of pulling are prohibited.
   2. The mandrel shall have a rope attached to each end allowing removal if an obstruction is encountered.
   3. Owner will check the mandrel dimension during pipe testing with a proving ring provided by Contractor.
   4. Altering of mandrel dimensions is prohibited.
E. Deflection exceeding the following maximum percentages shall be cause for rejection of the pipe and related Work.
   1. PVC Solid Wall Sewer Pipe: 5 percent
   2. HDPE Solid Wall Sewer Pipe: 5% of the Base Pipe ID per the table below:

| *Nominal Pipe Size* | *Base ID* | *Mandrel Diameter* |
|---|---|---|

| | | |
|---|---|---|
| *SDR 26 6 inches ID* | *5.793 inches* | *5.503 inches* |
| *SDR 26 8 inches ID* | *7.754 inches* | *7.366 inches* |
| *SDR 17 HDPE 12 inches OD* | *10.807 inches* | *10.267 inches* |
| *SDR 17 HDPE 24 inches OD* | *20.343 inches* | *19.412 inches* |
| *SDR 41 HDPE 30 inches OD* | *27.548 inches* | *26.171 inches* |

F. Percentage deflection: Based on average inside diameter.
   1. PVC Solid Wall pipe: Average outside diameter minus 2.12 times the minimum wall thickness per ASTM D3034 or ASTM F1803.
   2. HDPE: Inside diameter shall be the base ID, per the table above assuming 5% deflection.

G. The use of a re-rounder is prohibited.

## 3.12 STEEL CYLINDER ENCASEMENT

A. See Section 02446 (Trenchless Installation).

## 3.13 SIDE MAINS

A. Replace existing side main connections, size indicated, with PVC pipe size indicated and connected to the end of the existing main, matching inverts, with an eccentric transition coupling as shown in SCWA Design and Construction Standards for Sanitary Facilities, Drawing No. 100-A.

B. Bed, backfill, and resurface side mains in accordance with Section 02315 (Excavation, Bedding, Backfill, and Resurfacing).

## 3.14 SANITARY SIDE SEWER AND CLEANOUTS

A. Install side sewer and cleanouts per SCWA Design and Construction Standards for Sanitation Facilities, Drawing No. 121.

B. Side Sewer: 6 inch or 8 inch unless otherwise indicated.

C. Connect to existing side sewer as indicated.

## 3.15 ABANDONMENT AND REMOVAL OF EXISTING SEWER

A. Abandonment of sewer main:
   1. Per SCWA Design and Construction Standards for Sanitation Facilities, Drawing No. 113.
   2. Pumping of pipeline fill material shall take place from the low end of the pipe abandonment run, one pipeline reach at a time.
   3. Plug ends of reach of pipe to be abandoned with ready mix concrete plug with minimum 3 inch fill pipe in place at low end and minimum 2 inch vent pipe in place at upper end.
      a. Concrete: See Section 03002 (Concrete)
   4. Fill pipe shall have a 3 inch gate valve in the line.
   5. Vent pipe shall have a threaded cap on the end.
   6. If sewage/water is present in the sewer, it shall be displaced/pushed out of the pipe by the advancing cellular concrete during the abandonment process.
   7. Pumping of fill material shall not begin until Contractor has field verified existing sewer conditions to ensure that not illegal connections will end up being filled
   8. Provide a contingency plan for any potential problems with the pipeline abandonment process
   9. After abandonment of existing sewer main, backfill any pits and resurface per Section 02315 (Excavation, Bedding, Backfill, and Resurfacing).

B. Removal of sanitary sewer pipe:

1. Remove existing sanitary sewer pipe as indicated to allow construction of the new sanitary sewer pipe.
2. Materials removed are the property of Contractor; dispose of in accordance with applicable local, state, and federal regulations.

C. Removal of sewer trunk:
1. Remove and dispose of existing 21 inch diameter steel sewer trunk pipe and appurtenant fittings and security fencing crossing Agua Caliente Creek as indicated from the south bank of creek.
2. Contractor shall not enter the creek with any equipment. Small handheld tools and equipment may be used in the creek, upon approval by Owner, for removal of pipe supports.
3. Remove pipe supports flush with creek channel surface and dispose of in accordance with local , state, and federal requirements.

## 3.16 ABANDONMENT OF EXISTING MANHOLES

A. See Section 02536 (Manholes, Frames, and Covers).

## 3.17 TESTING

A. General:
1. Thoroughly clean the interior of pipes of adhering matter and other debris, to the approval of Owner. No testing of any pipe shall be started until the cleaning is complete and approved by Owner.
2. Place backfill to the surface and test the pipe.
3. Pipes shall be tested to a pressure of 15 feet of head (6.5 psig) unless noted otherwise herein below in this Section 02535.
4. Furnish necessary personnel, compressors, hose, supplies, equipment, bulkheads, and additional equipment needed to perform tests specified.
5. Provide to Owner a list of the scheduled pipe tests by noon of the Day preceding the scheduled test or tests.
   a. Notify Owner in writing of readiness to test a pipe or portion of pipe. Give Owner a minimum of 1 Business Day notice.
   b. Bulkheads, thrust blocks, anchors, temporary connections, and pumps shall be in place before notification of readiness is furnished to Owner.
   c. After testing, flush or blow pipes out and leave clean. Debris shall not be flushed or blown out into existing sewers.
6. Repeat testing until pipes pass tests. Repeat testing at Contractor's expense.

B. Sanitary Sewer Tests:
1. Air tests:
   a. Test pipes between manholes with low-pressure air in accordance with UNI-B-6.
      1) Provide a regulator or relief valve on pressurizing equipment; set as per UNI-B-6.
      2) No one shall be allowed in manholes while there is air pressure against test plugs.
      3) Plug pipe outlets to resist test pressure.
      4) When the prevailing ground water is above the sewer being tested, increase air pressure 0.43 psi for each foot the water table is above the flow line of the sewer.
      5) Laterals shall be considered part of the line to which they are connected and no adjustment of test time shall be allowed to compensate for the smaller diameter of the laterals.

6) For pipes other than those between Siphon Structures "A" and "B", slowly supply air into the line until test pressure of 6.5 psig, plus groundwater increase as noted above, is attained. Allow at least 5 minutes after test pressure is attained for air temperature in the test section to stabilize. Siphon Pipes between Structures "A" and "B" at Agua Caliente Creek crossing shall use test pressure of 13.0 psig with these procedures.
7) Re-establish the test pressure, and start a stopwatch. Determine the time required for pressure to drop by 0.5 psig.
8) The pipe section will have passed if the time observed for the pressure to drop 0.5 psig is greater than that determined by using the following table (UNI-B-6, Table 2, as modified for this Section 02535):

| Pipe Size | Minimum Time (min:sec) | Length for Minimum Time | Time for Longer Length (sec) | Test Time for Pipe Length L (min:sec) | | | |
|---|---|---|---|---|---|---|---|
| | | | | 100 ft | 200 ft | 300 ft | 400 ft |
| 4 inch | 1:53 | 597 | .190L | 1:53 | 1:53 | 1:53 | 1:53 |
| 6 inch | 2:50 | 398 | .427L | 2:50 | 2:50 | 2:50 | 2:51 |
| 8 inch | 3:47 | 298 | .760L | 3:47 | 3:47 | 3:48 | 5:04 |
| 12 inch | 5:40 | 199 | 1.709L | 5:40 | 5:42 | 8:32 | 11:23 |
| 24 inch | 11:20 | 99 | 6.837L | 11:23 | 22:47 | 34:11 | 45:35 |
| 27 inch | 12:45 | 88 | 8.653L | 14:25 | 28:50 | 43:16 | 57:41 |
| 30 inch | 14:10 | 80 ft | 10.683L | 17:48 | 35:37 | 53:25 | 71:13 |
| 36 inch | 17:00 | 66 ft | 15.384L | 25:39 | 51:17 | 76:55 | 102:34 |
| 42 inch | 19:54 | 57 ft | 20.942L | 34:54 | 69:49 | 104:42 | 139:37 |

b. When a combination of more than one pipe size is under test, the calculated time for the larger pipe applies.

## 3.18 POST-CONSTRUCTION TELEVISION INSPECTION

A. Video inspect sections of pipe from manhole to manhole.
   1. Video inspection shall not be done until the pipe is installed and has passed the required testing as described herein.
   2. Repair or correct deficiencies prior to preparing the post-construction video for submittal to Owner.
B. Preparation for Video Inspection: After cleaning of the pipe and just prior to performing the video inspection, introduce water in the upstream manhole until observed at the most downstream manhole to be videoed to ensure that any area where ponding is possible will be filled with water.
C. Video Camera and Video Recording Equipment:
   1. Video camera and digital video recorder: Record digital format in color.
      a. Lighting and camera quality: Suitable to allow a clear (not washed out), in-focus picture for the entire inside periphery of pipelines.

b. To ensure peak picture quality throughout all conditions encountered during the inspection survey, variable intensity control of camera lights shall be located at studio.
c. Replay of recorded video information shall be free of electrical interference and shall provide a clear stable image. If not, pipeline shall be videoed again at Contractor's expense.

2. Locate camera monitor within studio that allows seating of two authorized viewing personnel in addition to the operating technician.
   a. As part of the video presentation, a continuous forward readout of the camera distance from the start of each survey shall be simultaneously displayed on the monitor.
   b. Prior to the beginning of each video inspection from manhole to manhole, and as part of the video presentation, manhole identification numbers shall be displayed and become a part of the video record. Video record manhole identification numbers shall correspond to manhole numbers as indicated.
3. The video recording and monitoring equipment shall have the capability to instantly review video quality at all times, with still picture reproduction available.

D. Operations:
1. The operating technician shall have control of the movement of the television camera at all times.
   a. The travel speed of the camera shall be variable but uniform, and shall not exceed 10 feet per minute while viewing.
   b. Non-uniform or jerky camera movements will not be acceptable.
   c. The television system shall be capable of taping in increments of 1,000 feet with one setup.
   d. The operating technicians shall at all times be able to move the camera through the lines in either direction without the loss of quality in the video presentation on the monitor.
2. Footage reference number shall be displayed on the screen as well as the picture of the interior of the pipe and shall become a part of the video record.
3. Note both audio and text documentation of defects found in the pipe in the video.

E. Acceptance:
1. Any of the following observations shall be considered Defects and shall be corrected prior to Final Acceptance:
   a. Ponding greater than 10 percent of the nominal pipe inside diameter (3 inches for 30 inch main) or over 25 feet in length.
   b. Joint separations greater than 3/4 inch.
   c. Offset joints.
   d. Chips in pipe ends more than 1/4 inch deep.
   e. Cracked or damaged pipe or evidence of the presence of an external object bearing upon the pipe (rocks, roots, etc.).
   f. Infiltration.
   g. Debris or other foreign objects.
   h. Incomplete, blurry, or washed out video.
   i. Other obvious deficiencies when compared to requirements of this Section 02535.
2. Owner will notify Contractor in writing of any observed deficiencies revealed by the television inspection that will require repair, following which Contractor shall excavate and make the necessary repairs and make a television re-inspection.

F. Furnish post-construction video inspection on digital video disks (DVDs) with audio comments and certified inspection log reports detailing the physical condition of the sewer mains and laterals. Report each main and lateral individually, providing the following information:
   1. Inspection log report:
      a. Title sheet including:
         1) Owner's name: Sonoma Valley County Sanitation District
         2) Project Name: Sonoma Valley County Sanitation District, Sewer Trunk Replacement (Agua Caliente Creek Crossing)
         3) Date of inspection
         4) If videos and logs are not submitted together at one time, each submittal shall have a separate title page describing between which manholes each submittal covers
      b. Video log sheet for each run between manholes including:
         1) Pipe type and size
         2) Upstream and downstream manhole numbers
         3) Upstream and downstream manhole depths in feet
         4) Inspector's name
         5) Tape footage reference number
         6) Direction of flow and direction of the camera as well as the section length
         7) Defects description
         8) Diameter and length of depth gauge
         9) Video footage counter
         10) Define reach by the upstream and downstream manhole numbers indicated
         11) Location of lateral measured from downstream manhole
      c. Video that includes:
         1) Introductory text prior to start of video run including:
            (a) Pipe type and size in inches
            (b) Upstream and downstream manhole numbers for mains
            (c) Upstream and downstream manhole depths in feet
            (d) Inspector's name
            (e) Tape footage reference number
            (f) The street name where the sewer main is located together with the upstream and downstream cross streets, where applicable
            (g) Direction of flow and direction of camera as well as section length
            (h) Diameter and length of depth gauge
            (i) Location of lateral measured from downstream manhole
         2) Video inspection shall indicate:
            (a) Cumulative distance of run
            (b) Defects, both verbal and text description

END OF SECTION

SECTION 02536

# MANHOLES, FRAMES, AND COVERS

## PART 1 GENERAL

### 1.1 SUMMARY

A. Section Includes:
   1. Manholes
   2. Inside Drop Manholes
   3. Manhole Reducer Slabs
   4. Manhole Covers and Frames
   5. Manhole Abandonment
   6. Manhole Interior and Pipe Connection Patch Materials

B. Related Sections:
   1. Section 02116 (Groundwater Disposal)
   2. Section 02240 (Dewatering)
   3. Section 02315 (Excavation, Bedding, Backfill, and Resurfacing)
   4. Section 02535 (Sanitary Sewage Systems)
   5. Section 03002 (Concrete)

### 1.2 REFERENCES

| | |
|---|---|
| A. ASTM A48 | Standard Specification for Gray Iron Castings |
| B. ASTM C150 | Standard Specification for Portland Cement |
| C. ASTM C387 | Standard Specification for Packaged, Dry, Combined Materials for Concrete and High Strength Mortar |
| D. ASTM C478 | Standard Specification for Circular Precast Reinforced Concrete Manhole Sections |
| E. Greenbook 201 | Concrete, Mortar, and Related Materials |
| F. SCWA Design and Construction Standards for Sanitation Facilities, Drawing No. 100-A | Standard Manhole Sanitary Sewer |
| G. SCWA Design and Construction Standards for Sanitation Facilities, Drawing No. 101 | Drop Manhole Detail Sanitary Sewer |
| H. SCWA Design and Construction Standards for Sanitation Facilities, Drawing No. 102 | Manhole Reducer Slab Detail |
| I. SCWA Design and Construction Standards for Sanitation Facilities, Drawing No. 112 | Abandoned Manhole Detail |

## 1.3 SUBMITTALS

A. Product Data:
   1. Manholes
   2. Information on manhole frames, covers, materials, connectors, component construction, features, manhole component connectors, configuration, and dimensions
   3. Interior or protective lining
   4. Concrete materials
   5. Expanding-type grout
   6. Manhole interior and pipe connection patch materials
   7. Sewer lateral cleanout boxes and plugs
   8. Flexible coupling
   9. Waterproof coatings, applications and rates
B. Shop Drawings:
   1. Manhole and locations
   2. Manhole number
   3. Elevations, horizontal orientation of inlets and outlet
   4. Piping sizes, types, and pipe connector type
   5. Elevations of penetrations at inlet and outlet
C. Quality Assurance/Control Submittals:
   1. Design Data: Concrete mix design including admixtures
   2. Manufacturer's Recommendations: Manufacturer's written recommendations for manhole joint priming agent and sealing compound
   3. Design calculations for manhole reducer slabs: H-20 calculations.
   4. Certificates:
      a. Manufacturer(s) certificates stating precast concrete structures conform to specified requirements
   5. Testing Equipment Calibration Information:
      a. Technical information on the vacuum test gauge
D. Work Plans:
   1. Sewer manhole abandonment procedures
   2. Sewer manhole removal procedures

# PART 2 PRODUCTS

## 2.1 MANUFACTURERS AND MODELS

A. Precast Manhole Base and Sections
   1. General;
      a. Conform to ASTM C478
   2. Cook Concrete Products, Inc.
   3. US Concrete Precast Group
   4. Jensen Precast
   5. Central Precast
   6. Oldcastle Precast
   7. KriStar Precast
   8. Hanson Pipe and Precast
   9. Or Approved Equal

B. Cover and Frame:
   1. Conform to ASTM A48, Grade 30B minimum
   2. Conform to SCWA Design and Construction Standards for Sanitation Facilities, Drawing No. 104
   3. Manufacturers and Model Numbers:
      a. Phoenix Iron Works: P-1002
      b. South Bay Foundry: SBF-1900CPH/BS
      c. D&L Supply: E-1928CPH
      d. Or Approved Equal
C. Manhole Interior Coatings:
   1. Xypex
   2. Thoroseal
   3. Tegra Seal
   4. Or Approved Equal
D. Manhole Connectors:
   1. Water Stops for Connection to Existing Manholes and Cast-in-Place Manhole Bases:
      a. Fernco
      b. EJP
      c. Or Approved Equal
   2. Connectors for New Precast Manhole Bases:
      a. A-LOK: X-CEL
      b. Or Approved Equal
E. Plastic Gasket:
   1. Ram-Nek by K.T. Snuder Company
   2. Kent Seal No. 2 by Hamilton Kent Manufacturing Company
   3. Or Approved Equal

## 2.2 MATERIALS AND COMPONENTS

A. Manhole Sections:
   1. Reinforced precast concrete in accordance with ASTM C478
   2. Type V cement for sewer manholes per ASTM C150
   3. Designed for H-20 loading and an earth unit weight of 130 pounds per cubic foot.
B. Manhole Bases:
   1. Manhole bases shall be precast unless otherwise indicated.
   2. Precast bases:
      a. In Conformance with ASTM C478
      b. In accordance with SCWA Design and Construction Standards for Sanitation Facilities, Drawing No. 100-A
   3. Poured-in-place bases:
      a. Non-reinforced 4,000 psi concrete Section 03002 (Concrete) In accordance with SCWA Design and Construction Standards for Sanitation Facilities, Drawing No. 100-A
C. Warning Signs: Entrance to every manhole shall be fitted with a permanently affixed plastic warning sign.
   1. Location: On 24" diameter grade ring sections.
   2. Inscription: "CAUTION – VENTILATE BEFORE ENTERING" in clear, large lettering.

3. Dimension: 4-inch by 12-inch minimum.
4. Color: Red
5. Attachment: Attached to the concrete with four type-316 stainless steel anchors.

**2.3 CONCRETE**

A. See Section 03002 (Concrete)

**2.4 GROUT AND MORTAR**

A. See Section 03002 (Concrete)

**2.5 CELLULAR CONCRETE**

A. See Section 03002 (Concrete)

**2.6 CONFIGURATION OF MANHOLES**

A. Standard Manholes: SCWA Design and Construction Standards for Sanitation Facilities, Drawing No. 100-A.
B. Drop Manholes: SCWA Design and Construction Standards for Sanitation Facilities, Drawing No. 101.
C. Manhole Reducer Slab: SCWA Design and Construction Standards for Sanitation Facilities, Drawing No. 102.

**2.7 STRUCTURAL BEDDING, STRUCTURAL BACKFILL, AGGREGATE BASE, AND RESURFACING MATERIALS**

A. See Section 02315 (Excavation, Bedding, Backfill, and Resurfacing)

## PART 3 EXECUTION

**3.1 GENERAL INSTALLATION**

A. Manholes: Construct to the dimensions indicated and as specified herein. Protect Work against flotation.

**3.2 SUBGRADE**

A. Pump groundwater down to below installation levels just prior to placing manhole base in accordance with Section 02240 (Dewatering) and dispose of groundwater in accordance with Section 02116 (Groundwater Disposal).
B. Precast Bases:
   1. Remove loose material from bottom of manhole excavation after leveling the bottom.
   2. Place, and compact to 95 percent relative compaction, a 6-inch layer of drain rock extended 6 inches minimum beyond outside edges of base.
C. Poured-in-place Bases:
   1. Pour concrete against undisturbed material.

**3.3 MANHOLE INVERT**

A. Construct precast bases unless poured-in-place base is indicated.
B. Construct manhole inverts and benches as indicated and with smooth transitions to ensure an unobstructed flow through manhole.
C. Remove sharp edges or rough sections.
D. Trowel mortar surfaces smooth.
E. Bring the inner base section in the manhole up to top of pipes and round at sewer channels.

F. Slope benches back up to the walls with a slope of at least 2 inches per foot.
G. Poured-in-place bases:
   1. Pour concrete against undisturbed material
   2. Install in accordance with SCWA Design and Construction Standards for Sanitation Facilities, Drawing No. 100-A
   3. For bases installed on existing sewer mains, do not break through existing pipe until manhole has passed pressure tests.

## 3.4 MANHOLE AND FRAME AND COVER CONSTRUCTION

A. Set manhole segments and rings evenly per SCWA Design and Construction Standards for Sanitation Facilities, Drawing No. 100-A or Drawing No. 101.
   1. Bottom segment: Set in a pre-formed lip section with asphaltic sealant to make a watertight joint.
B. Install frames and covers on top of manholes to prevent infiltration of surface or groundwater into manholes.
   1. Set manhole cover approximately 1/8 inch above the surrounding grade so that water does not run toward the manhole but runs away from the manhole to the extent of the surrounding concrete ring.
   2. The area around the manhole ring shall not be subject to flooding during rainfall.
C. Set frame and cover to match finish street grade or slope so that vehicle traffic is not conscious of any impact or vibration in driving over manhole rim of cover.
D. Install asphalt resurfacing at manholes within asphalt surfaced roads within five (5) Business Days of backfilling the new manhole.

## 3.5 MANHOLE CONNECTIONS

A. Method of connecting pipe to manhole: In accordance with manhole connector manufacturer's written instructions and as approved by Owner.
B. Water Stops: Use double or 2 single water stops around pipes for connection to existing manhole bases and for poured-in-place bases.
C. Use manhole connectors to connect pipes to new precast manhole bases:
D. For HDPE pipe connections to manholes and structures, install HDPE wall anchors 6 inches inside of inside wall of manhole as indicated
E. Install an approved flexible coupling in the sewer main 12 inches from the manhole base for non-plastic pipe.
F. Install watertight plugs at the manholes and at the ends of stubs and dead end laterals as indicated.

## 3.6 COATINGS

A. Coat manhole interiors in accordance with manufacturer's written recommendations and in accordance with SCWA Design and Construction Standards for Sanitation Facilities, Drawing No. 100-A or Drawing No. 101.
B. Waterproof coatings and their application methods and rates: As approved by Owner.

## 3.7 SALVAGE EXISTING MANHOLE FRAMES AND COVERS

A. Unless otherwise indicated, remove, clean, and salvage existing undamaged frames and covers designated for removal. Deliver to Owner-designated location at Sonoma Valley Wastewater Treatment Plant at 22675 8th Street East, Sonoma. Damaged frames and covers shall become the property of Contractor to be disposed of in accordance with local, state, and federal regulations.

## 3.8 BYPASS PUMPING

A. See Section 02535 (Sanitary Sewage Systems)

## 3.9 MANHOLE ABANDONMENT

A. Prior to manhole demolition, core manhole concrete to be demolished minimum 2.0 inches in diameter, have core tested for presence of asbestos by a Certified Laboratory, receive results, and submit results to Owner within five Days of coring. If test comes back positive for asbestos, a change order will be required.
B. Following abandonment of pipes, abandon manhole as indicated, and per SCWA Drawing No. 112, except manholes on both sides of Agua Caliente Creek
C. Following abandonment of pipes and plugging of holes, manholes on both sides of Agua Caliente Creek shall only have frames and covers removed and then filled completely with cellular concrete to top.
D. After manhole abandonment, backfill existing pit with approved backfill material and resurface with asphalt concrete, where applicable, in accordance with Section 02315 (Excavation, Bedding, Backfill, and Resurfacing)

## 3.10 MANHOLE CORING

A. Existing manholes: To accommodate modification of existing manholes, core manhole as indicated to allow for connection and installation of new sewer pipe.
B. Core diameter: Sized to fit outside diameter of new pipe, installation of waterstops, wall anchors, non-shrink mortar, and other items necessary for the connection of new sewer pipe to manhole.

## 3.11 FIELD QUALITY CONTROL

A. Manhole Testing:
   1. Conduct a vacuum-type or water-type leakage test on each manhole following completed construction, except for horizontal joint grouting, as follows:
      a. Vacuum Test:
         1) Do not grout the horizontal manhole joints before testing.
         2) Plug pipes entering or exiting the manholes.
         3) Connect the testing device to the manhole in accordance with the device manufacturer's recommendations.
         4) Draw a vacuum of 10 inches Hg and shut off the vacuum pump.
            (a) Measure the length of time for the vacuum to drop to 9 inches Hg.
            (b) If the time is greater than the time as indicated in the table in Section 8.11 of SCWA Design and Construction Standards for Sanitation Facilities, the manhole passes the vacuum test.
      b. Water Test:
         1) Plug and fill each manhole with water.
         2) Water shall remain in each manhole for 30 minutes without showing signs of leakage.
   2. Promptly repair and retest any manhole that fails testing, at no additional cost to Owner.

END OF SECTION

SECTION 02745

# ASPHALT PAVEMENT

## PART 1 GENERAL

### 1.1 SUMMARY

A. Section Includes:
   1. New asphaltic concrete paving
B. Related Sections:
   1. Section 02315 (Excavation, Bedding, Backfill and Resurfacing)

### 1.2 REFERENCES

| | |
|---|---|
| A. Caltrans 19 | Caltrans Standard Specification for Earthwork |
| B. Caltrans 39 | Caltrans Standard Specification for Hot Mix Asphalt |
| C. Caltrans 92 | Caltrans Standard Specification for Asphalts |
| D. Caltrans 93 | Caltrans Standard Specification for Liquid Asphalts |
| E. Caltrans 94 | Caltrans Standard Specification for Asphaltic Emulsions |
| F. California Test 304 | Method of Preparation of Bituminous Mixtures for Testing |

### 1.3 SUBMITTALS

A. Product Data:
   1. Acknowledgement that products submitted meet requirements of standards referenced.
B. Quality Assurance/Control Submittals:
   1. Design Data:
      a. Asphalt design mix
   2. Certificates:
      a. Submit certificates of compliance from the supplier for bituminous materials for prime coat, paint binder (tack coat), and asphaltic concrete.

### 1.4 DELIVERY, STORAGE, AND HANDLING

A. In accordance with Caltrans 93.
B. Deliver asphaltic concrete using a method suitable to maintain the specified spreading temperature.

## PART 2 PRODUCTS

### 2.1 MATERIALS

A. Asphaltic Concrete: per Caltrans 39.
   1. Type B, ½ inch maximum aggregate size, medium gradation
   2. Paint Binder (Tack Coat): Anionic Emulsion, slow setting, SS-1 in accordance with Caltrans 94.
   3. Paving Asphalt: Steam-refined, penetration grade PG 64-16, per Caltrans 92.
B. Aggregate: per Caltrans 39
   1. Type A, coarse and fine aggregate, clean and free from decomposed materials, vegetable matter, and other deleterious substances, ½ inch maximum aggregate size, medium gradation.
C. Emulsified Asphalt: Per Caltrans 94.

D. Aggregate Base:
   1. See Section 02315 (Excavation, Bedding, Backfill and Resurfacing)
E. Geotextile Fabric:
   1. Paving Fabric:
      a. Conforming to Caltrans 88-1.02J.
      b. For use on Fairview Lane and Old Maple Avenue asphalt overlay resurfacing and Fairview Lane grind and replace asphalt resurfacing.
      c. Manufacturers and Models:
         1) US Fabrics, Inc, US100P nonwoven geotextile
         2) Propex (formerly Synthetic Industries), Petromat 4598 nonwoven geotextile
         3) Or Approved Equal

## 2.2 MIXES

A. Comply with mix design category PG 64-16, Caltrans 92.

## 2.3 MIXING

A. Per Caltrans 39.

# PART 3 EXECUTION

## 3.1 GENERAL

A. Adjust existing manholes, valve boxes, utility boxes, and other surface utilities located within the paving limits to finish grade.
B. Asphalt pavement: in accordance with Caltrans 39 and Caltrans 94.

## 3.2 INSTALLATION

A. Construct over ground surface compacted to 95 percent relative compaction and 12 inches minimum of class 2 aggregate base compacted to 95 percent relative compaction, unless indicated otherwise.
B. Construct to line, grade, and section as indicated and in accordance with Caltrans 19.
C. Apply layer of emulsified asphalt in accordance with Caltrans 94.
D. Install a compacted layer of patch asphaltic concrete for overlay portion, as indicated.
E. Install minimum 3 inches thick layer, unless indicated on Drawings or indicated otherwise.
F. Tolerance of Finished Grade: ± 0.10 foot from required elevations.
G. Installation tolerance shall not exceed 0.02 feet from finished grade of existing elevations.

## 3.3 ASPHALT CONCRETE SURFACING

A. Paint Binder: Apply to existing asphaltic concrete surfaces and between each lift of new asphaltic concrete and to vertical surfaces in accordance with Caltrans 39.
B. Asphaltic Concrete:
   1. Spread and compact asphalt concrete in accordance with Caltrans 39.
   2. Compact to 95 percent relative compaction per California Test 304.
   3. Finished surface shall be unyielding, true to grade, and free from surface irregularities.
   4. After receiving the final compaction, finish paving shall have a minimum thickness as specified above in Paragraph 3.2E and as required to match the adjacent finished surface grade.

## 3.4 FIELD QUALITY CONTROL

A. Before Final Acceptance, flood the paved areas with water to check drainage and surface irregularities. Replace or overlay high and low spots, subject to Owner approval, and water test the paving again after corrections have been made.
B. Replace or repair deficient and damaged asphalt paving.
C. Paving shall drain before being accepted.

END OF SECTION

# DIVISION 3

# CONCRETE

SECTION 03002

# CONCRETE

## PART 1 GENERAL

### 1.1 SUMMARY

A. Section Includes:
   1. Concrete for:
      a. Cast-in-place manhole bases
      b. Collars for manholes and cleanouts
      c. Manhole modifications
      d. Anchor and thrust blocks
      e. Fencing Footings
      f. Concrete Curbs, Curbs and Gutters, Grade Beams, Cut-off Walls
      g. Controlled Density Fill
      h. Cellular Concrete
      i. Lean Concrete
      j. Epoxy Grout
      k. Sand Cement Grout
      l. Grout and Mortar
      m. Miscellaneous applications

B. Related Sections:
   1. Section 02315 (Excavation, Bedding, Backfill, and Resurfacing)
   2. Section 02536 (Manholes, Frames, and Covers)

### 1.2 REFERENCES

| | | |
|---|---|---|
| A. | ACI 211.1 | Standard Practice for Selecting Proportions for Normal, Heavyweight and Mass Concrete |
| B. | ACI 212.3R | Chemical Admixtures for Concrete |
| C. | ACI 301 | Specifications for Structural Concrete for Buildings |
| D. | ACI 304R | Guide for Measuring, Mixing, Transporting, and Placing Concrete |
| E. | ACI 304.2R | Placing Concrete by Pumping Methods |
| F. | ACI 305R | Hot Weather Concreting |
| G. | ACI 306R | Cold Weather Concreting |
| H. | ACI 318 | Building Code Requirements for Structural Concrete |
| I. | ACI 347R | Recommended Practice for Concrete Formwork |
| J. | ASTM A185 | Standard Specification for Steel Welded Wire Fabric, Plain, for Concrete Reinforcement |
| K. | ASTM A615 | Standard Specification for Deformed and Plain Billet-Steel Bars for Concrete Reinforcement (Including Supplementary Requirements S1) |
| L. | ASTM C31 | Standard Practice for Making and Curing Concrete Test Specimens in the Field |
| M. | ASTM C33 | Standard Specification for Concrete Aggregates |
| N. | ASTM C39 | Standard Test Method for Compressive Strength of Cylindrical Concrete Specimens |

| | | |
|---|---|---|
| O. | ASTM C94 | Standard Specification for Ready-Mixed Concrete |
| P. | ASTM C138 | Standard Method of Test for Unit Weight, Yield, and Air Content (Gravimetric) of Concrete |
| Q. | ASTM C143 | Standard Test Method for Slump of Hydraulic Cement Concrete |
| R. | ASTM C150 | Standard Specification for Portland Cement |
| S. | ASTM C157 | Standard Test Method for Length Change of Hardened Hydraulic Cement Mortar and Concrete |
| T. | ASTM C172 | Standard Practice for Sampling Freshly Mixed Concrete |
| U. | ASTM C173 | Standard Test Method for Air Content of Freshly Mixed Concrete by the Volumetric Method |
| V. | ASTM C231 | Standard Test Method for Air Content of Freshly Mixed Concrete by the Pressure Method |
| W. | ASTM C260 | Standard Specification for Air Entraining Admixtures for Concrete |
| X. | ASTM C289 | Standard Test Method for Potential Alkali-Silica Reactivity of Aggregates (Chemical Method) |
| Y. | ASTM C309 | Standard Specification for Liquid Membrane-Forming Compounds for Curing Concrete |
| Z. | ASTM C330 | Standard Specification for Lightweight Aggregates for Structural Concrete |
| AA. | ASTM C494 | Standard Specification for Chemical Admixtures for Concrete |
| BB. | ASTM C618 | Standard Specification for Coal Fly Ash and Raw or Calcined Natural Pozzolan for Use as a Mineral Admixture in Concrete |
| CC. | ASTM C796 | Standard Test Method for Foaming Agents for Use in Producing Cellular Concrete Using Preformed Foam |
| DD. | ASTM C869 | Standard for Foaming Agents Used in Making Preformed Foam for Cellular Concrete |
| EE. | Corps of Engineers: Specification CRD-C572 | Polyvinyl Waterstops |

## 1.3 SUBMITTALS

A. Product Data:
   1. Manufacturer and type of non-shrink grout and the cure/seal compound required for the non-shrink grout.
B. Shop Drawings:
   1. Reinforcing steel:
      a. Grade, sizes, number, configuration, spacing, and location
      b. Fabrication and placement details
C. Samples:
   1. Aggregates at point of batching
D. Quality Assurance/Control Submittals:
   1. Design Data:
      a. Concrete mix designs:
         1) Sieve analysis and source of fine and coarse aggregates
         2) Results of test for aggregate organic impurities

3) Results of test for deleterious aggregate per ASTM C289
4) Proportioning of materials
5) Type of cement
6) Type of fly ash
7) Slump
8) Air content
9) Brand, type, ASTM designation, and quantity of each admixture proposed for use
10) Standard deviation value for concrete production facility

b. Controlled Density Fill (CDF)
1) Sieve analysis and source of fine and coarse aggregates
2) Results of test for aggregate organic impurities
3) Results of test for deleterious aggregate per ASTM C289
4) Proportioning of materials
5) Type of cement
6) Type of fly ash

c. Cellular Concrete:
1) Proportioning of materials
2) Type of cement
3) Type of foaming agent

2. Test Reports:
a. Concrete:
1) Shrinkage test results
2) 7-Day and 28-Day cylinder compressive test results of trial mixes per ACI 318 and as indicated in 3.3A below.

b. CDF:
1) Shrinkage test results
2) 7-Day and 28-Day cylinder compressive test results of trial mixes per ACI 318 to confirm weight and strength

c. Cellular Concrete:
1) Shrinkage test results
2) 7-Day and 28-Day cylinder compressive test results of trial mixes per ACI 318 to confirm weight and strength

3. Certificates:
a. Mill certificates
1) Reinforcing steel
2) Concrete

b. Certificate of conformance for fly ash

## 1.4 QUALITY ASSURANCE

A. Perform Work in accordance with ACI 301.
B. Conform to ACI 305R when concreting during hot weather.
C. Conform to ACI 306R.1 when concreting during cold weather.
D. Concrete:
1. Begin concrete production after concrete mix design has been approved.
2. Adjust concrete mix designs when material characteristics, Site conditions, weather, strength test results or other circumstances warrant.

## 1.5 DELIVERY, STORAGE, AND HANDLING

A. Packing, Shipping, Handling, and Unloading:
   1. Concrete:
      a. Prepare a delivery ticket for each load of ready-mixed concrete.
      b. Truck operator shall give ticket to Owner at time of delivery.
      c. Ticket to show:
         1) Mix identification mark
         2) Quantity delivered
         3) Amount of each material in batch
         4) Outdoor temperature in shade
         5) Time at which cement was added
         6) Numerical sequence of delivery
         7) Amount of water added
   2. Reinforcing steel:
      a. Ship to Site with attached plastic or metal tags with permanent mark numbers.
      b. Mark numbers to match Shop Drawing mark number.

B. Storage and Protection:
   1. Cement and fly ash:
      a. Store in moistureproof, weathertight enclosures.
      b. Do not use if caked or lumpy.
   2. Aggregate:
      a. Store to prevent segregation and contamination with other sizes or foreign materials.
   3. Admixtures:
      a. Protect from contamination, evaporation, freezing, or damage.
      b. Maintain within temperature range recommended by manufacturer.
      c. Completely mix solutions and suspensions prior to use.
   4. Reinforcing steel:
      a. Support and store rebar above ground.
      b. Keep clean and out of dirt or mud at all times.

# PART 2 PRODUCTS

## 2.1 MATERIALS

A. Portland Cement: Conform to ASTM C150 Type II or V and Low Alkali (0.6 percent or less).

B. Fly Ash:
   1. ASTM C618, Class F.
   2. Nonstaining.
   3. Hardened concrete containing fly ash: Uniform light gray color.
   4. Maximum loss on ignition: 6 percent.
   5. Compatible with other concrete ingredients.

C. Admixtures:
   1. Air entraining admixtures: ASTM C260.
   2. Water reducing, retarding, and accelerating admixtures:
      a. ASTM C494 Type A through E.
      b. Conform to provisions of ACI 212.3R.
      c. Do not use retarding or accelerating admixtures unless specifically approved in writing and at no cost to Owner.

    d. Follow manufacturer's instructions.
    e. Use chloride free admixtures only.
  3. Maximum total water soluble chloride ion content contributed from ingredients of concrete including water, aggregates, cementitious materials and admixtures by weight percent of cement:
    a. Pre-stressed concrete: 0.06
    b. Other concrete: 0.10
  4. Do not use calcium chloride.
  5. Pozzolanic admixtures: ASTM C618.
  6. Provide admixtures of same type, manufacturer and quantity as used in establishing required concrete proportions in mix design.
  7. Foaming agent: ASTM C796 and C869.

D. Water: Potable, clean, free of oils, acids, and organic matter.

E. Aggregates:
  1. Normal weight concrete: ASTM C33, except as modified below.
  2. Fine aggregate:
    a. Clean natural sand.
    b. No manufactured or artificial sand.
  3. Coarse aggregate:
    a. Crushed rock, natural gravel, or other inert granular material.
    b. Maximum amount of clay or shale particles: 1 percent.
  4. Gradation of coarse aggregate:
    a. Lean concrete and concrete topping: Size #7.
    b. Other concrete: Size #57 or #67.
  5. Coarse aggregate for lightweight concrete:
    a. ASTM C330.
    b. Maximum size: 3/4 inch.

F. Reinforcement:
  1. Reinforcing Steel Bars: ASTM A615, Grade 60, free of rust, corrosion, and scale.
  2. Steel welded wire fabric: ASTM A185

G. Forms:
  1. Prefabricated or site-built.
  2. Plywood: PS1, waterproof, resin bonded, exterior-type Douglas fir.
    a. Face adjacent to concrete: Grade B or better.
  3. Fiberboard: Fed Spec LLL-B-810, Type IX, tempered, waterproof, screen back, concrete form hardboard.
  4. Lumber: Straight; uniform width and thickness; and free from knots, offsets, holes, dents, and other surface defects.
  5. Chamfer strips: Clear white pine, surface against concrete planed.
  6. Form ties: Removable end, permanently embedded body type with cones on outer ends not requiring auxiliary spreaders.
    a. Cone diameter: 3/4-inch minimum to 1-inch maximum.
    b. Embedded portion 1-inch minimum back from concrete face.
    c. If not provided with threaded ends, constructed for breaking off ends without damage to concrete.
  7. Form release: Nonstaining and shall not prevent bonding of future finishes to concrete surface.

H. Waterstops for pipe penetrations into manholes and siphon structures: See Section 02536 (Manholes Frames and Covers)
I. Chairs, Runners, Bolsters, Spacers, and Hangers:
   1. Stainless steel, epoxy coated, or plastic coated metal.
      a. Plastic coated: Rebar support tips in contact with forms only.
J. Membrane Curing Compound: ASTM C309, Type I-D.
   1. Resin based, dissipates upon exposure to UV light.
   2. Curing compound shall not prevent bonding of any future coverings, coatings or finishes.
K. Multifilament fiber: ASTM C1116.
   1. 100 percent virgin polypropylene containing no reprocessed olefin materials.

## 2.2 CONCRETE MIXES

A. Concrete:
   1. Ready mixed concrete conforming to ASTM C94.
   2. Specified quality capable of being placed without segregation and, when cured, of developing properties required.
B. Strength:
   1. Provide specified strength and type of concrete for each use in structure(s) as follows:

| Type | Weight | Specified Strength* |
|---|---|---|
| Concrete | Normal Weight | 4000 psi |
| *Minimum 28-Day compressive strength | | |

C. Air Entrainment: Provide air entrainment in concrete resulting in a total air content percent by volume as follows:

| Type | Maximum Aggregate Size | Total Air Content Percent |
|---|---|---|
| Concrete topping | 3/8 inch | 6 to 8 |
| Other concrete | 1 inch or 3/4 inch | 5 to 7 |

   1. Air content: Measured in accordance with ASTM C231, ASTM C173, or ASTM C138.
D. Slump: 4 inches maximum, 1 inch minimum.
   1. Measured at point of discharge of concrete into concrete construction member.
   2. Pumped concrete:
      a. Provide additional water at batch plant to allow for slump loss due to pumping.
      b. Provide only enough additional water so that slump of concrete at discharge end of pump hose does not exceed maximum slump specified above.
   3. Determine slump per ASTM C143.
E. Selection of Proportions:
   1. General - Proportion ingredients to:
      a. Produce proper workability, durability, strength, and other required properties.
      b. Prevent segregation and collection of excessive free water on surface.

2. Minimum cement contents and maximum water cement ratios for concrete shall be as follows:

| Minimum Specified Strength | Minimum Cement (lb/cy) | | | Maximum Water Cement Ratio by Weight |
|---|---|---|---|---|
| | 1/2 | 3/4 | 1 | |
| 4000 | 611 | 611 | 611 | 0.45 |

3. Substitution of fly ash: Maximum of 15 percent by weight of cement at rate of 1 pound fly ash for 1 pound of cement.
4. Normal weight concrete: Proportion mixture to provide desired characteristics using method described below:
   a. Trial Mix: Per ACI 318 except as modified herein.
      1) Air content within range specified in this Section 03002.
      2) Record and report temperature of trial mixes.
      3) Proportion trial mixes per ACI 211.1.
5. Required average strength to exceed specified 28-Day compressive strength by amount determined or calculated in accordance with requirements of ACI 318 using standard deviation of proposed concrete production facility as described in ACI 318.

F. Allowable 28-Day shrinkage: 0.040 percent per ASTM C157.

## 2.3 BASE MATERIAL

A. See Section 02315 (Excavation, Bedding, Backfill, and Resurfacing).

## 2.4 CONTROLLED DENSITY FILL (CDF)

A. CDF Trench Backfill, Pipe Abandonment, or Manhole Abandonment Material:
   1. General:
      a. Non-segregating, self-containing, free-flowing, and excavatable material resulting in a hardened, dense, non-settling fill.
      b. A mixture of Portland cement, sand, Class F pozzolan (fly ash), air entraining agent and water, batched by a ready-mix concrete plant and delivered to Site by means of transit mixing trucks.
   2. Consistency: Allow mix to flow into voids and around pipes, appurtenances, and structures.
   3. Conform to Greenbook 201-6 except as modified herein.
      a. Designed compressive strength: 75 psi minimum to 200 psi maximum at 28 Days.
      b. Slump: 8 inches plus or minus 2 inches.
      c. Mixture:
         1) Minimum total cementitious material: 100 lb./yd$^3$ minimum
         2) Portland cement:
            (a) Conform to ASTM C150, Type II cement
            (b) 50 lb./yd$^3$ minimum
         3) Fly ash: Class F conforming to ASTM C618
         4) Aggregates:
            (a) Conform to Greenbook 201-1.2.2 and 201-6.2.2
            (b) Conform to ASTM C33
            (c) Sand equivalent: 31 minimum
            (d) Maximum aggregate size: 3/8 inch

5) Water: Conform to Greenbook 201-1.2.3. Potable, clean, free of oils, acids, and organic matter.
6) Admixtures:
(a) Accelerating: Conform to ASTM C494
(b) Water-Reducing: Conform to ASTM C494
(c) Air-Entraining: 25 percent maximum conforming to ASTM C260

4. Mix materials in accordance with Greenbook 201-6.4.

B. Proportion materials in accordance with Greenbook 201-6.3

## 2.5 CELLULAR CONCRETE

A. Cellular Concrete Pipe Abandonment and Manhole Abandonment Material:
1. General:
a. Non-segregating, self-containing, free-flowing, and excavatable material resulting in a hardened, dense, non-settling fill.
b. Design Strength: Minimum 100 psi, Maximum 150 psi.
2. Materials:
a. A mixture of Portland cement, foaming agent, and water, batched on-Site
1) Portland Cement: ASTM C150
2) Foaming Agent: ASTM 796, ASTM 869
3) Water: Potable, clean, free of oils, acids, and organic matter.

## 2.6 GROUT AND MORTAR

A. Epoxy grout:
1. Subject to compliance with the Contract Documents, the following manufacturers and models are acceptable:
a. Euclid Chemical Company, "High Strength Grout."
b. Fosroc, "Conbextra EPHF."
c. Or Approved Equal.
2. Sand cement grout:
a. Mixture:
1) Three parts sand
2) One part Portland cement
3) Entrained air: Six percent plus or minus one percent.
4) Sufficient water for required workability.
b. Minimum 28-Day compressive strength: 3,000 psi.
3. Non-Shrink mortar:
a. Standard premixed non-shrink mortar conforming to ASTM C387, Type S, or proportion 1 part Portland cement to 2 parts clean, well-graded sand, which will pass a 1/8 inch screen with water added only as necessary to produce a stiff workable mortar.
1) Admixtures may be used not exceeding the following percentages by weight of cement:
2) Hydrated lime: 10 percent
3) Diatomaceous earth or other inert material: 5 percent
b. Consistency of mortar shall be such that it will adhere to the surfaces
c. Mortar mixed for longer than 30 minutes shall not be used

# PART 3 EXECUTION

## 3.1 FORMING AND PLACING CONCRETE

A. General:
   1. Contractor is responsible for design and erection of formwork.
   2. Construct formwork so that concrete members and structures are of correct size, shape, alignment, elevation and position.
      a. Allowable tolerances: As recommended in ACI 347R.
   3. Provide slabs and beams of minimum indicated depth when sloping foundation base slabs or elevated floor slabs to drains.
      a. For slabs on grade, slope top of subgrade to provide floor slabs of minimum uniform indicated depth.
      b. Do not place floor drains through beams.

B. Openings: Provide openings in formwork to accommodate Work of other trades.
   1. Accurately place and securely support items built into forms.

C. Chamfer Strips: Place 1/2-inch chamfer strips in forms to produce 1/2 inch-wide beveled edges on permanently exposed corners of members.

D. Reinforcement:
   1. Position, support and secure reinforcement against displacement.
   2. Locate and support with chairs, runners, bolsters, spacers, and hangers, as required.
   3. Set wire ties so ends do not touch forms and are directed into concrete, not toward exposed concrete surfaces.
   4. Lap splice lengths: Not permitted.
   5. Extend reinforcement to within 2 inches of concrete perimeter edges (or minimum concrete cover).
      a. If perimeter edge is earth formed, extend reinforcement to within 3 inches of edge.
   6. Unless otherwise indicated, provide minimum concrete cover as follows:
      a. Concrete deposited against earth: 3 inches.
      b. Formed surfaces exposed to weather or in contact with earth: 2 inches
      c. Formed surfaces exposed to or located above any liquid: 2 inches.
   7. Do not weld reinforcing bars.
   8. Inspect to ensure steel is free of rust, corrosion, mud, or dirt prior to installation.

E. Construction, Expansion, and Contraction Joints:
   1. Provide as indicated.
   2. Locate wall vertical construction joints at 30-foot maximum centers and wall horizontal construction joints at 10-foot maximum centers.
   3. Locate construction joints in floor slabs and foundation base slabs so that concrete placements are approximately square and do not exceed 2,500 sf.
   4. At least 48 hours shall elapse between placing of adjoining concrete construction.
   5. Thoroughly clean and remove laitance and loose and foreign particles from construction joints.
   6. Before concrete is placed, coat construction joints with an approved bonding adhesive; use and apply in accordance with manufacturer's instructions.

F. Embedments:
   1. Set and build in anchorage devices and other embedded items required for other Work that is attached to or supported by concrete.
   2. Use setting diagrams, templates, and instructions for locating and setting.

G. Preparation:

1. Clean and adjust forms prior to concrete placement.
2. Tighten forms to prevent mortar leakage.
3. Coat form surfaces with form release agents prior to placing reinforcing bars in forms.

H. Aggregate:
1. Do not use frozen or partially frozen aggregates.
2. Do not use bottom 6 inches of stockpiles in contact with ground.
3. Allow sand to drain until moisture content is uniform prior to use.

I. Placing Concrete:
1. Place concrete in compliance with ACI 304R and ACI 304.2R.
2. Place in a continuous operation within planned joints or sections.
3. Begin placement when Work of other trades affecting concrete is completed.
4. Place concrete by methods that prevent aggregate segregation.
5. Do not allow concrete to free fall more than 4 feet.
6. Where free fall of concrete would exceed 4 feet, place concrete by means of tremie pipe or chute.

J. Consolidation:
1. Consolidate concrete using mechanical vibrators supplemented with hand rodding and tamping, so that concrete is worked around reinforcement and embedded items into all parts of forms.

K. Protection:
1. Protect concrete from physical damage or reduced strength due to weather extremes.
2. In cold weather comply with ACI 306R except as modified herein.
   a. Do not place concrete on frozen ground or in contact with forms or reinforcing bars coated with frost, ice, or snow.
   b. Minimum concrete temperature at time of mixing:

| Outdoor Temperature at Placement (in Shade) | Concrete Temperature at Mixing |
|---|---|
| Below 30˚F | 70˚F |
| Between 30-45˚F | 60˚F |
| Above 45˚F | 50˚F |

   c. Do not place heated concrete that is warmer than 80˚F.
   d. If freezing temperatures are expected during curing, maintain concrete temperature at or above 50˚F for 7 Days or 70˚F for 3 Days.
   e. Do not allow concrete to cool suddenly.
3. In hot weather comply with ACI 305R except as modified herein.
   a. At air temperature of 90˚F and above, keep concrete as cool as possible during placement and curing.
   b. Do not allow concrete temperature to exceed 70˚F at placement.
   c. Prevent plastic shrinkage cracking due to rapid evaporation of moisture.
   d. Do not place concrete when actual or anticipated evaporation rate equals or exceeds 0.2 pounds per square foot per hour as determined from ACI 305R, Figure 2.1.5.

L. Curing:
1. Wet cure concrete topping by maintaining a minimum depth of 2 inches of water over top of concrete topping.
   a. Wet cure a minimum of 7 Days.

2. Begin curing concrete as soon as free water has disappeared from exposed surfaces.
3. Cure concrete by use of moisture retaining cover, burlap kept continuously wet or by membrane curing compound.
4. Provide protection as required to prevent damage to concrete and to prevent moisture loss from concrete during curing period.
5. Provide curing for minimum of 7 Days.
6. Form materials left in place may be considered as curing materials for surfaces in contact with form materials except in periods of hot weather.
7. If forms are removed before 7 Days have elapsed, finish curing of formed surfaces by one of above methods for remainder of curing period depending on weather.
8. Curing vertical surfaces with a curing compound: Cover vertical surfaces with a minimum of two coats of curing compound.
   a. Allow preceding coat to completely dry prior to applying next coat.
   b. Apply first coat of curing compound immediately after form removal.
   c. Vertical surface at time of receiving first coat: Damp with no free water on surface.
   d. Vertical surface: Steeper than 1 vertical to 4 horizontal.

M. Form Types:
1. Surfaces exposed to view:
   a. Prefabricated plywood panel forms, Site-built plywood forms, or forms lined with plywood or fiberboard.
   b. Laid out in a regular and uniform pattern with long dimensions vertical and joints aligned.
   c. Produce finished surfaces free from offsets, ridges, waves, and concave or convex areas.
   d. Construct forms sufficiently tight to prevent leakage of mortar.
2. Surfaces normally submerged or not normally exposed to view:
   a. Wood or steel forms sufficiently tight to prevent leakage of mortar.
3. Other types of forms may be used:
   a. For surfaces not restricted to plywood or lined forms.
   b. As backing for form lining.

N. Concrete:
1. Normal weight concrete: All locations.

## 3.2 CONCRETE FINISHES

A. Tolerances:
1. Class A for pad: 1/8 inch in 10 feet.
2. Slope, if any, to be down toward side of pad to reduce ponding.

B. Surfaces Exposed to View:
1. Provide a smooth finish for exposed concrete surfaces and surfaces that are:
   a. To be covered with a coating or covering material applied directly to concrete.
   b. Scheduled for grout-cleaned finish.
2. Remove fins and projections, and patch voids, air pockets, and honeycomb areas with cement grout.
3. Fill tie holes with nonshrink nonmetallic grout.

C. Surfaces Not Exposed to View:
1. Patch voids, air pockets and honeycomb areas with cement grout.
2. Fill tie holes with nonshrink nonmetallic grout.

D. Troweled Finish:

1. Float finish surface.
2. Next power trowel, and finally hand trowel.
3. Produce a smooth surface that is relatively free of defects with first hand troweling.
4. Perform additional toweling by hand after surface has hardened sufficiently.
5. Final trowel when a ringing sound is produced as trowel is moved over surface.
6. Thoroughly consolidate surface by hand troweling.
7. Leave finished surface essentially free of trowel marks, uniform in texture and appearance and plane to a Class A tolerance.
8. On surfaces intended to support floor coverings remove any defects of sufficient magnitude that would show through floor covering by grinding.

E. Broom Finish: Immediately after concrete has received a float finish as specified, give concrete a transverse scored texture by drawing a broom across surface.

## 3.3 FIELD QUALITY CONTROL

A. Site Tests:
   1. Strength test - procedure:
      a. Three cylinders, 6 inches diameter x 12 inches high, will be taken from each delivery per ASTM C172 and ASTM C31.
      b. Cylinders will be tested per ASTM C39:
         1) One cylinder at 7 Days.
         2) Two cylinders at 28 Days.
   2. Strength test - frequency:
      a. Not less than one test each Day concrete placed.
      b. Not less than one test for each 50 CY or major fraction thereof placed in one Day.
      c. Not less than one test for each type of concrete poured.
      d. Not less than one test for each concrete structure exceeding 2 CY volume.
   3. Slump test: Per ASTM C143.
      a. Determined for each strength test sample.
      b. Additional slump tests may be taken.
   4. Air content: Per ASTM C231, ASTM C173, and ASTM C138.
      a. Determined for each strength test sample.
   5. Temperature: Determined for each strength test sample.

B. Evaluation of Tests:
   1. Strength test results: Average of 28-Day strength of two cylinders from each sample.
      a. If one cylinder manifests evidence of improper sampling, molding, handling, curing, or testings, strength of remaining cylinder will be used as test result for that sample.
      b. If both cylinders show any of above defects, test will be discarded.

C. Acceptance of Concrete:
   1. Strength level of each type of concrete:
      a. Average of three consecutive strength tests equals or exceeds required specified 28-Day compressive strength.
      b. No individual strength test falls below required specified 28-Day compressive strength by more than 500 psi.

END OF SECTION

SECTION 03480

# PRECAST CONCRETE STRUCTURES

## PART 1 GENERAL

### 1.1 SUMMARY

A. Section Includes: Precast concrete siphon structures.
B. Related Sections:
   1. Section 02536 (Manholes, Frames, and Covers)
   2. Section 03002 (Concrete)

### 1.2 REFERENCES

| | |
|---|---|
| ASTM C150 | Standard Specification for Portland Cement |
| ASTM A615 | Standard Specification for Deformed and Plain Billet-Steel Bars for Concrete Reinforcement (Including Supplementary Requirements S1) |
| ASTM A1064 | Standard Specification for Carbon-Steel Wire and Welded Wire Reinforcement, Plain and Deformed, for Concrete Standard |

### 1.3 SUBMITTALS

A. Product Data:
   1. Submit literature and information for all materials used including:
      a. Concrete materials literature in accordance with Section 03002 (Concrete)
      b. Reinforcement materials in accordance with Section 03002 (Concrete)
      c. Pipe connectors product data in accordance with Section 02536 (Manholes, Frames, and Covers)
      d. Hatch installation instructions
   2. Submit concrete design in accordance with Section 03002 (Concrete)
B. Shop Drawings:
   1. Submit shop drawing plan, profile and section views of structures as needed to manufacture and construct structures
   2. Submit steel reinforcement shop drawings
   3. Submit hatch installation drawings

### 1.4 QUALITY ASSURANCE

A. Siphon Structure shall be designed to withstand H-20 highway loadings, where indicated.
B. Minimum concrete strength shall be 4,000 psi at 28 Days.

## PART 2 PRODUCTS

### 2.1 MATERIALS

A. General:
   1. Portland cement shall conform to ASTM C150, Type II.
   2. Reinforcement:
      a. Steel bar: ASTM A615, Grade 60 (deformed)
      b. Welded wire fabric: ASTM A1064

## 2.2 SIPHON STRUCTURES

A. Double leaf hatches shall be aluminum as indicated.
B. Acceptable manufacturers:
   1. Bilco
   2. Halliday
   3. Or Approved Equal

# PART 3 EXECUTION

## 3.1 SIPHON STRUCTURES

A. Install siphon structures at the locations indicated.
B. Joints of siphon structures shall be made watertight using non-shrink grout.
C. Test siphon structures similar to manholes for water tightness specified in Section 02536 (Manholes, Frames, and Covers)

END OF SECTION

# DIVISION 5

# METALS

SECTION 05095

# FIELD PIPE WELDING

## PART 1 GENERAL

### 1.1 SUMMARY

A. Section includes:
   1. Welding of steel casing
   2. Qualification of welding procedures
   3. Qualification of welders
   4. Qualification of inspectors

B. Related Sections:
   1. Section 02446 (Trenchless Installation)

### 1.2 REFERENCES

| | |
|---|---|
| A. ANSI/AWS D1.1 | Structural Welding Code - Steel |
| B. ASME Boiler and Pressure Vessel Code, Section VIII | Pressure Vessels |
| C. ASTM E8 | Tension Testing of Metallic Materials |
| D. AWS A5.1 | Specification for Carbon Steel Electrodes for Shielded Metal Arc Welding |
| E. AWWA C200 | Steel Water Pipe 6 Inches (150 mm) and Larger |
| F. AWWA C206 | Field Welding of Steel Water Pipe |

### 1.3 SUBMITTALS

A. Product Data:
   1. Welding electrodes, include manufacturer's name, data composition, and recommended storage requirements
   2. Shielding material for metal arc welding

B. Quality Assurance/Control Submittals:
   1. Test Reports:
      a. Radiographic film and reports
      b. Magnetic particle test results
      c. Dye penetrant test results
   2. Manufacturer's Instructions:
      a. Pipe manufacturer's recommended joint welding detail
   3. Certificates:
      a. Welder certifications
      b. Weld Inspector qualifications, per Paragraph 1.4C

### 1.4 QUALITY ASSURANCE

A. Qualifications:
   1. Welders:
      a. Pursuant to AWWA C206, qualified in accordance with ANSI/AWS D1.1, Sec 4, Qualification, Part A, by an independent, local, approved testing agency.

b. Machines and electrodes used in qualification tests**:** Similar to those used in the Work. Contractor shall furnish all material and bear the expense of qualifying welders.
c. Welders routinely employed by the Contractor shall be re-qualified at intervals of not greater than 1 year.

B. Pre-Testing Meetings:
1. The following meetings shall be scheduled with Owner at least two working days prior to start of testing:
a. Weldment Testing:
1) Magnetic particle test
2) Dye penetrant test
3) Radiographic test

C. Qualification of Welding Inspectors
1. Welding inspectors shall be certified in accordance with AWS standards.

D. Qualification of NDE Technicians:
1. Nondestructive examination technicians shall be qualified in accordance with the requirements of AWS standards.
2. The authority of the NDE technicians shall be limited to the acceptance or rejection of weld quality. The NDE technician is not authorized to approve repair procedure.

## PART 2 PRODUCTS

### 2.1 MATERIALS

A. Welding electrodes: Conform to recommendations of pipe manufacturer.
B. Filler Metal: Filler metals shall be certified by AWS A5.1
C. Low-Hydrogen Electrodes: Low-hydrogen electrodes are shipped in hermetically sealed containers, which normally can be stored indefinitely without danger of moisture pick-up. After removal from sealed containers, low-hydrogen electrodes shall be stored in heated cabinets at temperatures from 120°C to 150°C (248°F to 302°F).
D. Welds Thicker than 13mm: When the thickness of a butt weld exceeds 13 mm (0.5 inch) filler metals producing low-hydrogen deposits shall be used. Cellulose coated electrodes may be used for root passes.
E. Backing Rings: The use of backing rings is prohibited. Welding procedures requiring the use of backing rings are unacceptable.
F. Beveled pipe ends for field welds are in accordance with AWWA C200.

## PART 3 EXECUTION

### 3.1 GENERAL PROCEDURES

A. Surfaces to be welded and the welding procedure: Conform to AWWA C206, unless noted otherwise.
B. Fuse welds with base metal, uniform in appearance, free from cracks and free from irregularities.
C. Restart on clean and sound metal. Remove dirt, slag, and flux before succeeding beads are applied.
D. Limit porosity and slag inclusions in accordance with ASME Boiler and Pressure Vessel Code, Section VIII.

E. Repair defective welds by chipping, grinding, flame gouging, or arc-air gouging.
F. Do not undercut along side of finished pass.
G. Use procedures for welding sequences that will minimize eccentric stresses, shear, or distortion in the weld.
H. Butt welds: Complete penetration and fusion.
I. Finished weld bead: Central to the seam
J. Artificial or faced cooling of welded joints is not permitted.
K. Unless otherwise approved by Owner:
   1. Shade unbackfilled joint of pipe from direct sun rays to control temperature stresses.
   2. Use properly supported awnings, umbrellas, tarpaulins or other suitable materials for a minimum period of 2 hours prior to the beginning of the welding operation and until the weld has been completed.
   3. Do not rest shading materials at the joint area directly on the pipe; support to allow air circulation around the pipe.
   4. Shading of pipe joints need not be performed when ambient air temperature is below 60 degrees F.
L. Perform welding in at least two passes.
M. Individual passes: Not to exceed 1/4 inch in throat dimension.

## 3.2 PIPE JOINT WELDS

A. Two welding passes required for each joint.
   1. Contractor's option, as approved by Owner:
      a. Two passes inside pipe, or
      b. Two passes outside pipe, or
      c. One pass inside pipe and one pass outside pipe.
B. Sharp edges, burrs, upset weldment, and weld spatter: ground smooth.
C. If welding coated pipe, follow manufacturer's written recommendations, and apply tape coating as specified in Section 02446 (Trenchless Installation)

## 3.3 FIELD QUALITY CONTROL

A. Tests:
   1. Weld testing shall be performed by a third-party inspector paid for by the Contractor.
   2. Perform magnetic particle test for 100 percent of joint welds.
   3. Perform dye penetrant test for other applicable non-joint welds on 100 percent of welds.
B. Test coupons: In accordance with ASTM E8.
   1. Welded seam shall develop strength of adjacent steel sheet or plate.
   2. Take two test coupons upon commencement of pipe welding on a sample joint.
      a. Perform tensile test
      b. Perform bend test
      c. Perform I-notch impact test
C. Above-listed tests do not eliminate requirement for pressure test specified in Section 02446 (Trenchless Installation).

END OF SECTION

# DRAWINGS

SONOMA VALLEY COUNTY SANITATION DISTRICT

# SEWER TRUNK REPLACEMENT (AGUA CALIENTE CREEK CROSSING)

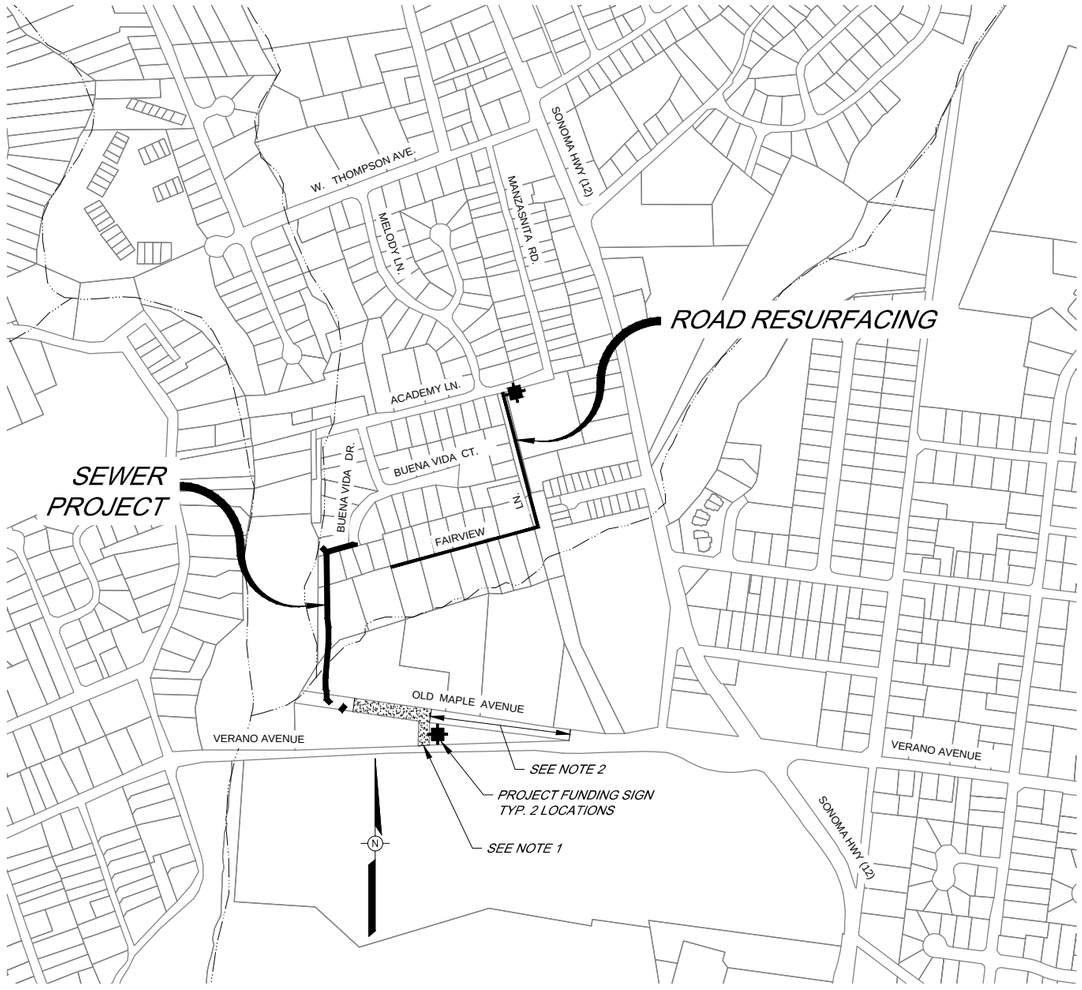


NOTES:
1. AREA OF OLD MAPLE AVENUE THAT MAY REQUIRE ASPHALT OVERLAY TYPE "A" FOLLOWING COMPLETION OF PIPELINE WORK. SEE DRAWING NUMBER C-4
2. NO ACCESS UNLESS ALLOWED BY OWNER.

## VICINITY MAP

NOT TO SCALE

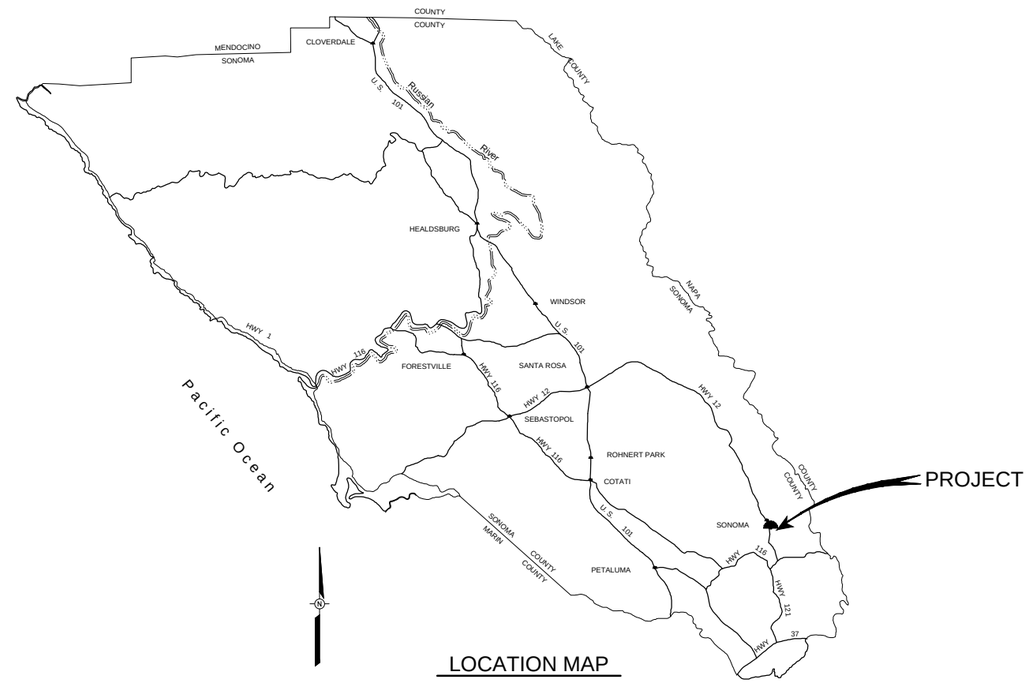


## LOCATION MAP

NOT TO SCALE

## INDEX TO DRAWINGS

| Sheet Number | DRAWING NUMBER | TITLE |
|---|---|---|
| 1 | G–1 | INDEX TO DRAWINGS, LOCATION AND VICINITY MAPS |
| 2 | G–2 | GENERAL NOTES, ABBREVIATIONS AND SYMBOLS |
| 3 | C–1 | PLAN AND PROFILE STA 0+00 TO STA 5+00 |
| 4 | C–2 | PLAN AND PROFILE STA 5+00 TO STA 7+40 AND MISCELLANEOUS PROFILES |
| 5 | C–3 | DETAILS AND TABLE OF NEW SS MANHOLES |
| 6 | C–4 | SIPHON STRUCTURE "A" AND OLD MAPLE AVENUE GRADING AND PAVEMENT PLAN |
| 7 | C–5 | SHIPON STRUCTURE "A" ACCESS PAD AND OLD MAPLE AVENUE GRADING PROFILES |
| 8 | C–6 | GRADING SECTIONS AND DETAILS –SIPHON STRUCTURE 'A' |
| 9 | C–7 | SIPHON STRUCTURE "B " ACCESS, GRADING AND PAVING PLAN, AND DETAILS / SHED RELOCATION AND WATER SERVICES PLAN |
| 10 | C–8 | REINFORCED CONCRETE PRECAST SIPHON STRUCTURES 'A' AND 'B' DETAILS |
| 11 | C–9 | PLAN – FAIRVIEW LANE RESURFACING |
| 12 | C–10 | FAIRVIEW LANE RESURFACING DETAILS AND TABLE |
| 13 | D–1 | TRENCH DETAILS |
| 14 | D–2 | MISCELLANEOUS DETAILS |

BAR LENGTH ON ORIGINAL DRAWING EQUALS ONE INCH. ADJUST SCALE ACCORDINGLY

REGISTERED PROFESSIONAL ENGINEER
VICTOR H. SMITH
No. C35525
CIVIL
STATE OF CALIFORNIA

| NO. | DATE | REVISION | BY |
|---|---|---|---|
| | | | |

SONOMA VALLEY COUNTY SANITATION DISTRICT

SCALE: AS SHOWN
DATE: 18 MARCH 2015
DRAWN: ADF
REVIEWED:

SEWER TRUNK REPLACEMENT (AGUA CALIENTE CREEK CROSSING)

INDEX TO DRAWINGS, LOCATION AND VICINITY MAPS

FILE NAME: 7544_XING_GENERAL
CONTRACT NUMBER: 70-712-7 #7
DRAWING NUMBER: G-1
SHEET 1 OF 14

\\sd-data\proj\sanitation\sonoma valley csd\collection\7544-agua_caliente-xing

## ABBREVIATIONS

| | |
|---|---|
| AB | AGGREGATE BASE |
| AC | ASPHALTIC CONCRETE |
| ACP | ASBESTOS CEMENT PIPE |
| ANG | ANGLE |
| APPROX | APPROXIMATE |
| BC | BEGINNING OF CURVE |
| BLD | BUILDING |
| BO | BLOWOFF |
| C & G | CURB AND GUTTER |
| CIP | CAST-IN-PLACE |
| CI | CURB INLET |
| CDF | CONTROLLED DENSITY FILL |
| CMP | CORRUGATED METAL PIPE |
| CONC | CONCRETE |
| CP | CONCRETE PIPE |
| CL | CENTERLINE, CLASS |
| CLR | CLEAR |
| CONST | CONSTRUCTION |
| cu ft | CUBIC FEET |
| cu yd | CUBIC YARD |
| DI | DROP INLET |
| DIP | DUCTILE IRON PIPE |
| DIA | DIAMETER |
| D/W | DRIVEWAY |
| DWG | DRAWING |
| E | EAST |
| EA | EACH |
| EA WY | EACH WAY |
| EC | END OF CURVE |
| EG | EXISTING GRADE |
| ELEV | ELEVATION |
| EP | EDGE PAVEMENT |
| EXST | EXISTING |
| FG | FINISH GRADE |
| FT | FEET |
| FL | FLOWLINE |
| FNC | FENCE |
| INV | INVERT |
| G | GUTTER |
| HDPE | HIGH DENSITY POLYETHYLENE |
| HORIZ | HORIZONTAL |
| HWY | HIGHWAY |
| JP | JOINT POLE |
| L | LENGTH |
| LF | LINEAR FEET |
| LG | LIP OF GUTTER |
| LT | LEFT |
| MAX | MAXIMUM |
| MB | MAIL BOX |
| MIN | MINIMUM |
| N | NORTH |
| NE | NORTHEAST |
| NO | NUMBER |
| NTS | NOT TO SCALE |
| NW | NORTHWEST |
| OD | OUTSIDE DIAMETER |
| PRC | POINT OF REVERSE CURVE |
| PUE | PUBLIC UTILITY EASEMENT |
| PSSE | PERMANENT SANITARY SEWER EASEMENT |
| PVC | POLYVINYL CHLORIDE |
| PVI | POINT OF VERTICAL INTERSECTION |
| R | RADIUS |
| RC | RELATIVE COMPACTION |
| RCB | REINFORCED CONCRETE BOX |
| RCP | REINFORCED CONCRETE PIPE |
| ROW | RIGHT-OF-WAY |
| RDWD | REDWOOD |
| RT | RIGHT |
| S | SOUTH, SLOPE |
| SD | STORM DRAIN |
| SDR | STANDARD DIMENSION RATIO |
| SE | SOUTHEAST |
| SEC | SECTION |
| SS | SANITARY SEWER |
| SSCO | SANITARY SEWER CLEAN OUT |
| SSMH | SANITARY SEWER MANHOLE |
| STA | STATION |
| STD | STANDARD |
| STL | STEEL |
| SW | SOUTHWEST |
| sq ft | SQUARE FEET |
| sq yd | SQUARE YARD |
| TC | TOP OF CONCRETE |
| TCC | TOP OF CONCRETE CURB |
| TCE | TEMPORARY CONSTRUCTION EASEMENT |
| TEMP | TEMPORARY |
| TS | TRUNK SEWER |
| TYP | TYPICAL |
| VCP | VITRIFIED CLAY PIPE |
| VERT | VERTICAL |
| VIF | VERIFY IN FIELD |
| W | WEST |
| W/ | WITH |
| WS | WATER SERVICE |
| U.N.O. | UNLESS NOTED OTHERWISE |

## TYPICAL SECTION LETTERING AND DETAIL NUMBER SYSTEM

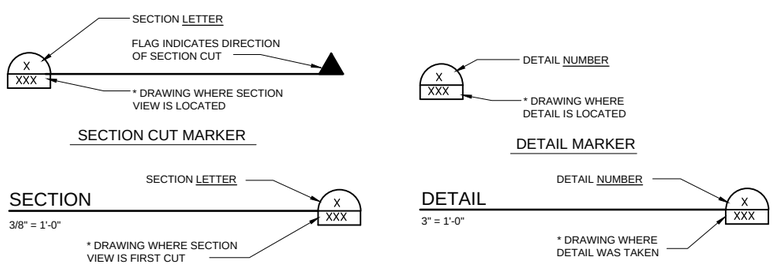


* IF PLAN AND SECTION, OR DETAIL CALL-OUT AND DETAIL ARE SHOWN ON SAME DRAWING, DRAWING NUMBER IS REPLACED BY A LINE (-).

## LEGEND:

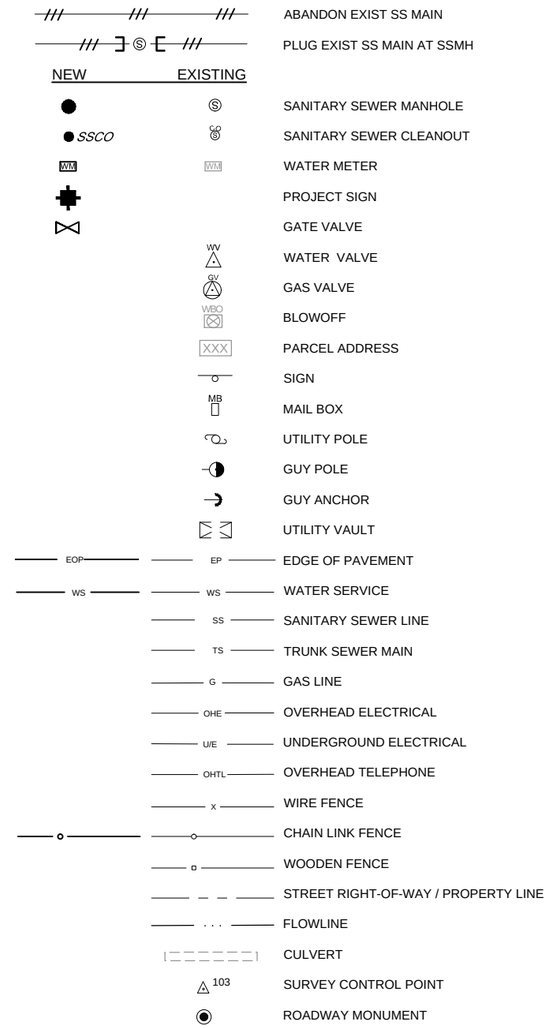


## GENERAL NOTES

1. HORIZONTAL DATUM: CALIFORNIA COORDINATE SYSTEM 1983 (CCS83), ZONE II (1991.35)
2. PRIMARY HORIZONTAL CONTROL: NATIONAL GEODETIC SURVEY REFERENCE STATION: HPGN D CA 04 KF (PID JT9616 PUBLISHED CCS83 VALUES (U.S. SURVEY FT.): NORTH: 1,851,473.83 EAST: 6,427,331. PUBLISHED ACCURACY: FIRST ORDER (HORIZONTAL). THIS REFERENCE STATION IS ALSO SHOWN ON RECORD OF SURVEY NO. S-569, FILED FOR RECORD IN BOOK 2001 OF MAPS, AT PAGE 43, OFFICIAL RECORDS OF THE COUNTY OF SONOMA, CALIFORNIA.
3. VERTICAL DATUM: BASED UPON THE NATIONAL GEODETIC VERTICAL DATUM OF 1929 (NGVD29)
4. PRIMARY VERTICAL CONTROL: SONOMA COUNTY WATER AGENCY BENCHMARK SV-1: A 1-1/2" BRONZE DISC SET IN THE CONCRETE BASE OF THE FLAG POLE LOCATED AT THE SOUTHEAST CORNER OF THE SONOMA VALLEY TREATMENT PLANT OPERATIONS BUILDING. ELEVATION: 23.43'
5. STATIONING: ALL STATIONING REPRESENTS HORIZONTAL MEASUREMENT AT CENTERLINE OF CONSTRUCTION.
6. ORIENTATION: RIGHT AND LEFT DIRECTIONS ARE FROM CENTERLINE LOOKING UPSTATION.
7. LENGTH: LENGTHS INDICATED ARE MEASURED BETWEEN CENTERS OF MANHOLES / STRUCTURES.

### CONTROL POINT TABLE

| POINT NUMBER | ELEVATION | NORTHING | EASTING | FULL DESCRIPTION |
|---|---|---|---|---|
| 111 | 109.729 | 1872471.8585 | 6423917.6736 | P+K Nail |
| 112 | 103.996 | 1872456.9571 | 6423517.1657 | P+K&BW "SCWA Ctl." |
| 113 | 107.796 | 1872758.1828 | 6423388.8632 | ReBar/Al.Cap "SCWA" |
| 114 | 103.066 | 1872607.8581 | 6423393.5446 | SurvSpk&BW |
| 126 | 95.148 | 1872198.3888 | 6423480.2759 | REBAR w/RedCap |
| 127 | 96.752 | 1872346.4674 | 6423395.5231 | REBAR w/RedCap |
| 187 | 99.376 | 1873452.0805 | 6423273.2095 | REBAR w/RedCap |
| 188 | 98.597 | 1872745.4314 | 6423195.7215 | REBAR w/RedCap |
| 190 | 101.174 | 1873286.8140 | 6423421.7503 | SurvSpk&BW |
| 191 | 106.065 | 1873452.3867 | 6423501.5181 | P+K&BW "SCWA Ctl." |
| 193 | 118.759 | 1873862.8900 | 6423928.6142 | P+K Nail |
| 225 | 106.907 | 1873472.8298 | 6423568.2355 | C.M.-Well.Mon. |
| 226 | 105.082 | 1873426.1857 | 6423481.6797 | C.M.-Well.Mon. |
| 227 | 108.061 | 1873532.3343 | 6423804.9469 | C.M.-Well.Mon. |
| 228 | 101.451 | 1873312.8614 | 6423431.4836 | C.M.-Well.Mon. |
| 251 | 101.104 | 1872752.7744 | 6423312.0081 | 60D |
| 257 | 99.703 | 1872940.3050 | 6423400.9900 | REBAR w/RedCap |
| 259 | 99.507 | 1873087.1490 | 6423320.2520 | REBAR w/RedCap |
| 265 | 102.770 | 1873263.2360 | 6423912.4537 | SurvSpk&BW |
| 268 | 119.547 | 1873878.4467 | 6423988.3976 | SurvSpk&BW |
| 270 | 100.768 | 1873247.1195 | 6423294.2337 | REBAR w/RedCap |

REGISTERED PROFESSIONAL ENGINEER
VICTOR H. SWIFT
No. C35525
CIVIL
STATE OF CALIFORNIA

| NO. | DATE | REVISION | BY |
|---|---|---|---|
| | | | |

SONOMA VALLEY COUNTY SANITATION DISTRICT

SCALE: AS SHOWN
DATE: 18 MARCH 2015
DRAWN: ----
REVIEWED:

SEWER TRUNK REPLACEMENT (AGUA CALIENTE CREEK CROSSING)

GENERAL NOTES, ABBREVIATIONS AND SYMBOLS

FILE NAME: 7544_XING_G-2
CONTRACT NUMBER: 70-712-7 #7
DRAWING NUMBER: G-2
SHEET 2 OF 14

\\sd-data\proj\sanitation\sonoma valley csd\collection\7544-agua_caliente-xing

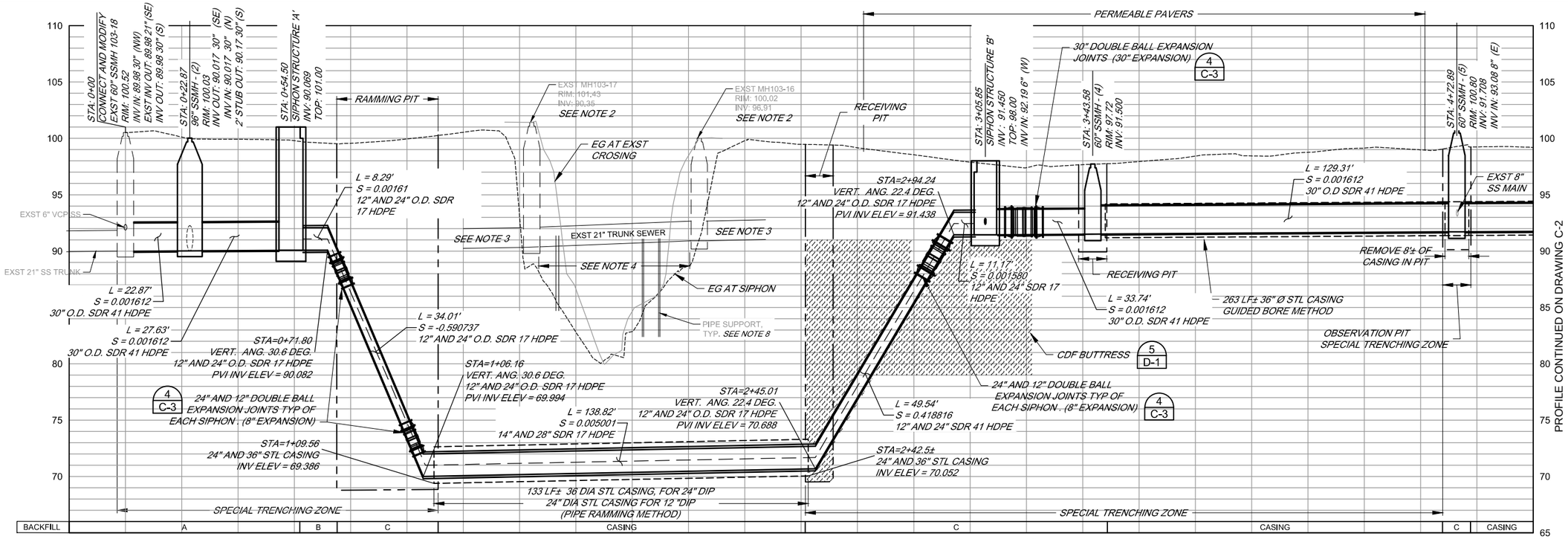


PROFILE A

SCALE HORIZ 1" = 20'
VERT 1" = 5'

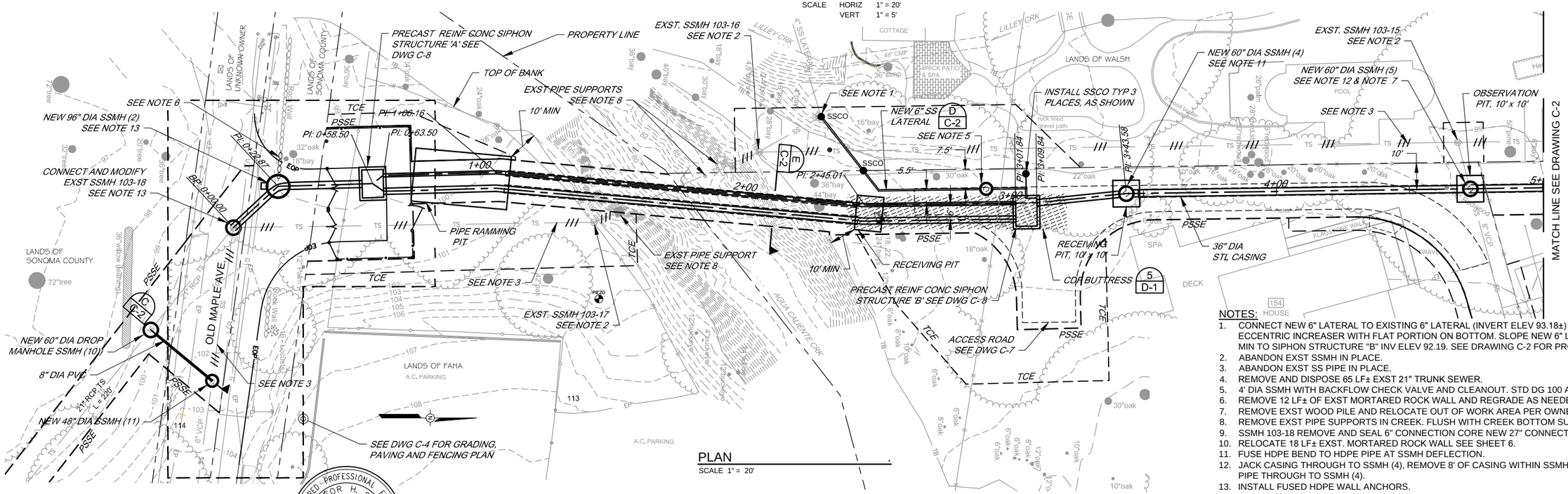


PLAN

SCALE 1" = 20'

NOTES:

1. CONNECT NEW 6" LATERAL TO EXISTING 6" LATERAL (INVERT ELEV 93.18±) WITH 4" x 6" ECCENTRIC INCREASER WITH FLAT PORTION ON BOTTOM. SLOPE NEW 6" LATERAL (99'±) at 1% MIN TO SIPHON STRUCTURE "B" INV ELEV 92.19. SEE DRAWING C-2 FOR PROFILE.
2. ABANDON EXST SSMH IN PLACE.
3. ABANDON EXST SS PIPE IN PLACE.
4. REMOVE AND DISPOSE 65 LF± EXST 21" TRUNK SEWER.
5. 4' DIA SSMH WITH BACKFLOW CHECK VALVE AND CLEANOUT. STD DG 100 AND 127.
6. REMOVE 12 LF± OF EXST MORTARED ROCK WALL AND REGRADE AS NEEDED.
7. REMOVE EXST WOOD PILE AND RELOCATE OUT OF WORK AREA PER OWNER OF SAME PARCEL.
8. REMOVE EXST PIPE SUPPORTS IN CREEK. FLUSH WITH CREEK BOTTOM SURFACE.
9. SSMH 103-18 REMOVE AND SEAL 6" CONNECTION CORE NEW 27" CONNECTION.
10. RELOCATE 18 LF± EXST. MORTARED ROCK WALL SEE SHEET 6.
11. FUSE HDPE BEND TO HDPE PIPE AT SSMH DEFLECTION.
12. JACK CASING THROUGH TO SSMH (4), REMOVE 8' OF CASING WITHIN SSMH (5) PIT, JACK HDPE PIPE THROUGH TO SSMH (4).
13. INSTALL FUSED HDPE WALL ANCHORS.

BAR LENGTH ON ORIGINAL DRAWING EQUALS ONE INCH. ADJUST SCALE ACCORDINGLY

REGISTERED PROFESSIONAL ENGINEER VICTOR H. SMITH No. C35525 CIVIL STATE OF CALIFORNIA

| NO. | DATE | REVISION | BY |
|---|---|---|---|
| | | | |

SONOMA VALLEY COUNTY SANITATION DISTRICT

SCALE: AS SHOWN
DATE: 18 MARCH 2015
DRAWN: ADF
REVIEWED:

SEWER TRUNK REPLACEMENT (AGUA CALIENTE CREEK CROSSING)

PLAN AND PROFILE STA 0+00 TO STA 5+00

FILE NAME: 7544_XING_CIVIL
CONTRACT NUMBER: 70-712-7 #7
DRAWING NUMBER: C-1
SHEET 3 OF 14

\\sd-data\proj\sanitation\sonoma valley csd\collection\7544-agua_caliente-xing

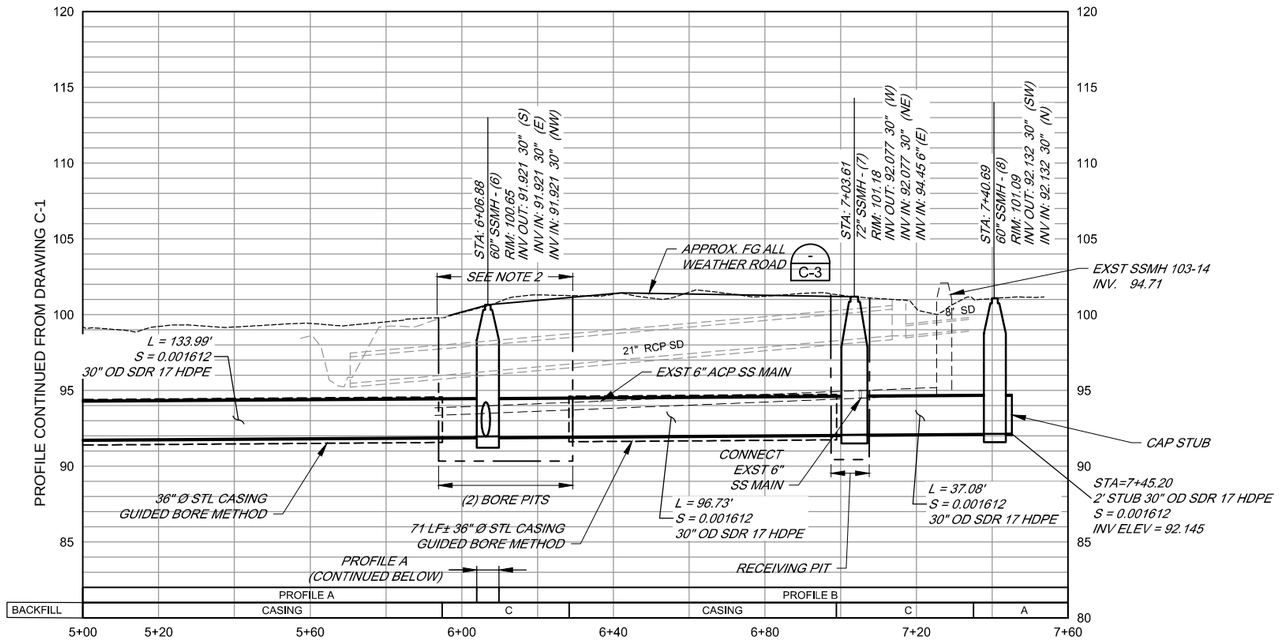


PROFILE A & B

SCALE HORIZ 1" = 20'
VERT 1" = 5'

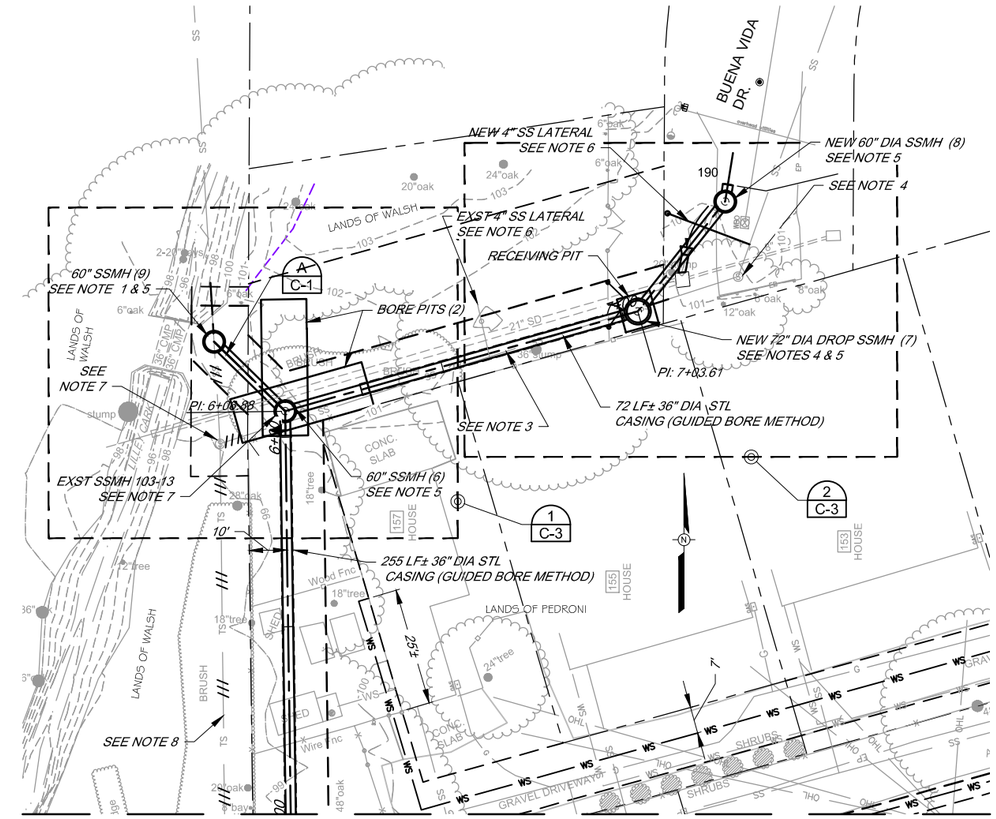


MATCH LINE SEE DRAWING C-1

PLAN

SCALE 1" = 20'

NOTES:

1. CONNECT EXISTING 21" TRUNK TO NEW 60" SSMH (9) AND PLACE NEW 30" OD SDR 17 HDPE SS TRUNK OUTLET TO NEW 60" DIA. SSMH (6) .
2. REMOVE AND RESTORE EXST 21" RCP STORM DRAIN WITHIN BORE PIT.
3. REMOVE AND/OR ABANDON APPROXIMATELY 124 LF± OF 6" ACP SS.
4. EXST SSMH 103-14 6" INV OUT 94.71. REMOVE AND REPLACE 9' OF EXST 6" ACP OUTLET PIPE. CONNECT TO NEW TRUNK SSMH (7) WITH 7 LF± OF 6" PVC AT S=0.0100, 6" IN AT TRUNK SSMH (7) = 94.45
5. INSTALL FUSED WALL ANCHOR PER DETAIL 6 DG C-3.
6. REMOVE EXST 4" ACP SS LATERAL, PROVIDE NEW 4" PVC SS LATERAL.
7. ABANDON EXST SSMH IN PLACE.
8. ABANDON EXST SEWER PIPE.

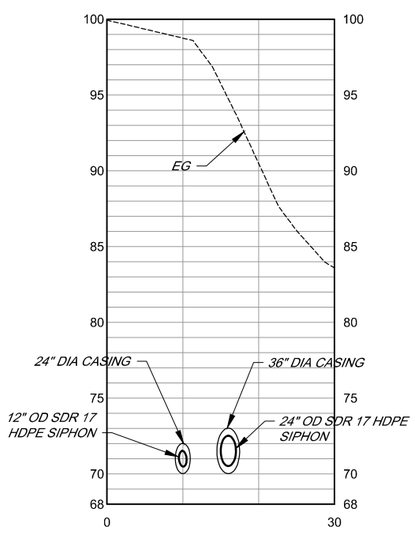


SECTION

SCALE HORIZ 1" = 10'
VERT 1" = 5'

E C-1

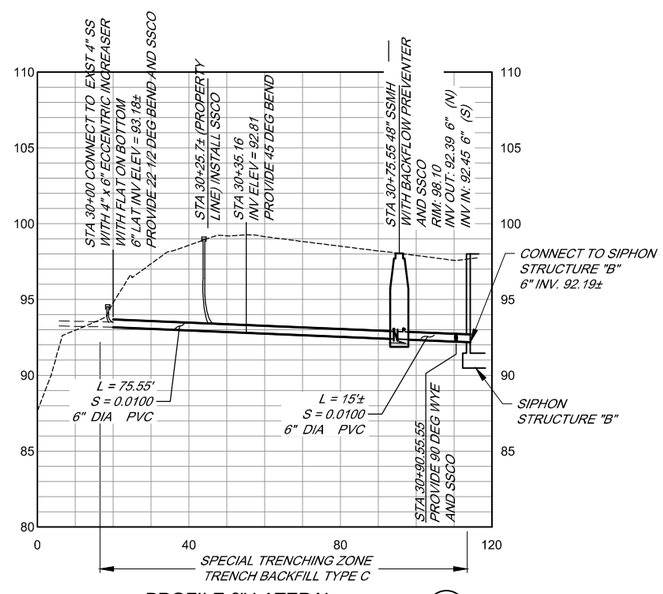


PROFILE 6" LATERAL

SEE DRAWING C-1 FOR PLAN

SCALE HORIZ 1" = 20'
VERT 1" = 5'

D C-1

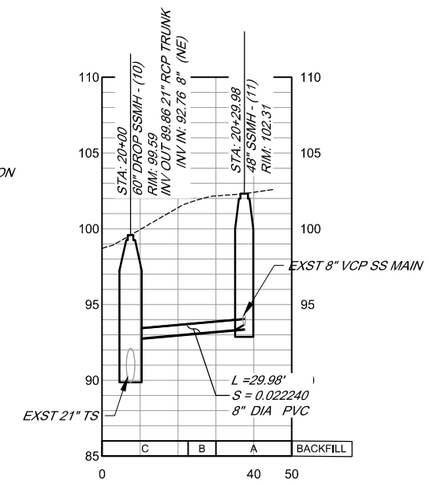


PROFILE C (8" SS MAIN)

SEE DRAWING C-1 FOR PLAN

SCALE HORIZ 1" = 20'
VERT 1" = 5'

C C-1

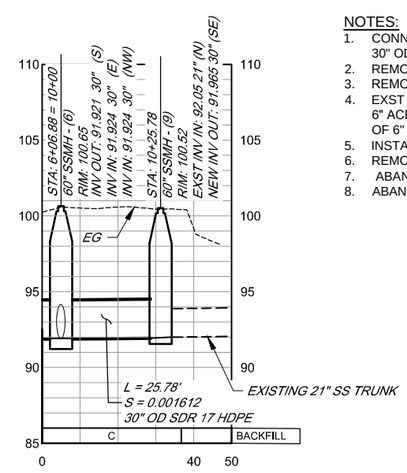


PROFILE A

(CONTINUED ABOVE)

SCALE HORIZ 1" = 20'
VERT 1" = 5'

A -

BAR LENGTH ON ORIGINAL DRAWING EQUALS ONE INCH. ADJUST SCALE ACCORDINGLY

REGISTERED PROFESSIONAL ENGINEER VICTOR H. SIMPER No. C35525 CIVIL STATE OF CALIFORNIA

| NO. | DATE | REVISION | BY |
|---|---|---|---|

SONOMA VALLEY COUNTY SANITATION DISTRICT

SCALE: AS SHOWN
DATE: 18 MARCH 2015
DRAWN: ADF
REVIEWER:

SEWER TRUNK REPLACEMENT (AGUA CALIENTE CREEK CROSSING)

PLAN AND PROFILE STA 5+00 TO STA 7+40 AND MISCELLANEOUS PROFILES

FILE NAME: 7544_XING_CIVIL
CONTRACT NUMBER: 70-712-7 #7
DRAWING NUMBER: C-2
SHEET 4 OF 14

\\sd-data\proj\sanitation\sonoma valley csd\collection\7544-agua_caliente-xing

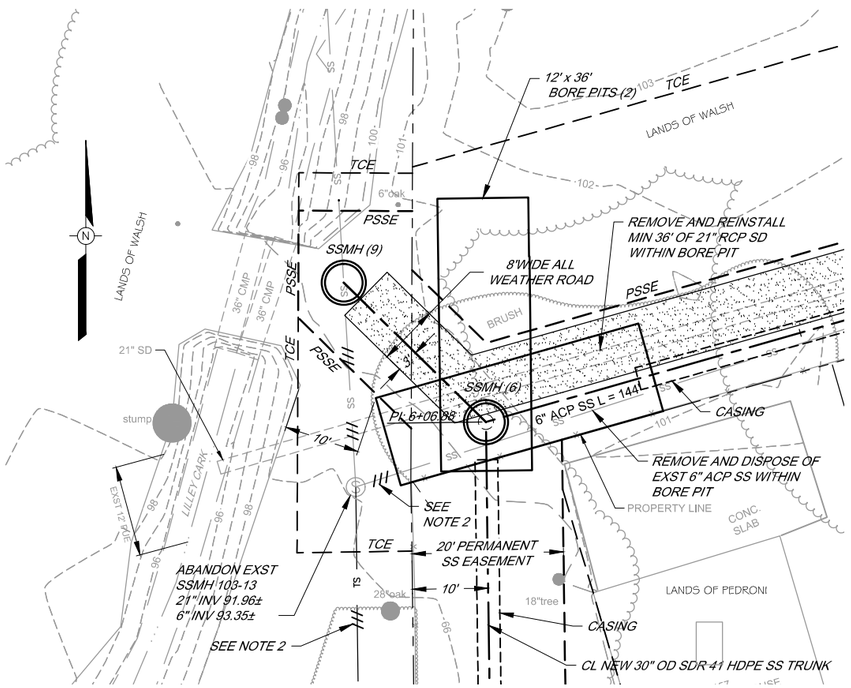


DETAIL 1 / C-2

SCALE: 1" = 10'

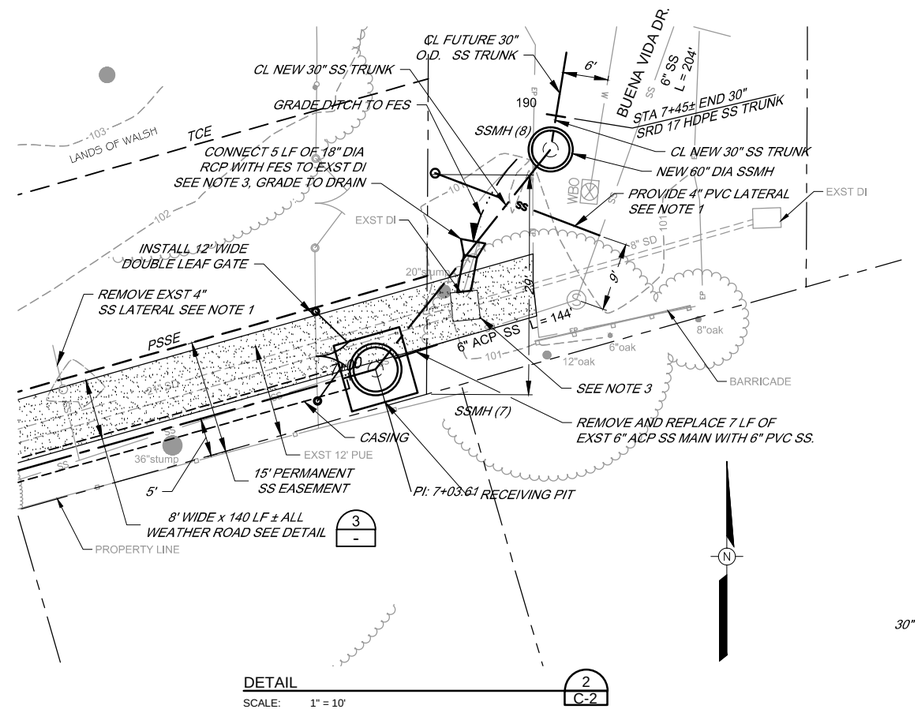


DETAIL 2 / C-2

SCALE: 1" = 10'

NOTES:

1. REMOVE EXST 4" ACP SS LATERAL AND PROVIDE NEW 4" PVC LATERAL CONNECTION TO EXST 6" ACP SS MAIN AS INDICATED.
2. ABANDON SS MAIN / TRUNK.
3. MODIFY EXST SIDE INLET. SEE SPECIFICATIONS.

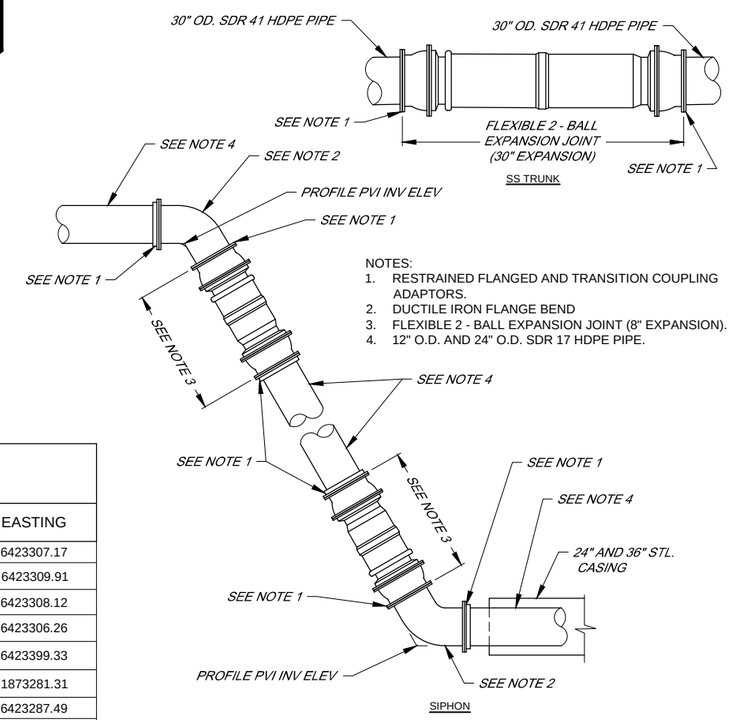


NOTES:

1. RESTRAINED FLANGED AND TRANSITION COUPLING ADAPTORS.
2. DUCTILE IRON FLANGE BEND
3. FLEXIBLE 2 - BALL EXPANSION JOINT (8" EXPANSION).
4. 12" O.D. AND 24" O.D. SDR 17 HDPE PIPE.

EXPANSION JOINT PROFILE DETAIL 4 / C-2

SOUTH END OF SIPHON

N.T.S.

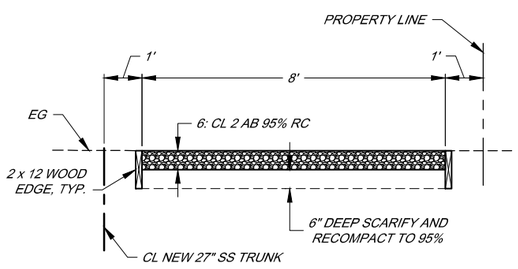


ROADWAY TYPICAL SECTION 3 / –

SCALE: 1" = 2'

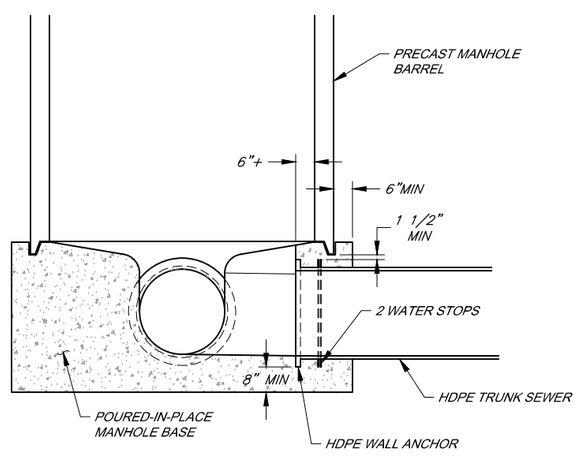


NOTE:
SEE SCWA SS STD. DWG. NUMBER 100-A FOR OTHER REQUIREMENTS.

DETAIL 6 / C-1 6 / C-2

TRUNK SEWER WITH WALL ANCHORS AT MANHOLES

N.T.S.

LIST OF NEW SSMH

| NAME SSMH | NORTHING | EASTING |
|---|---|---|
| SSMH (2) | 1872643.81 | 6423307.17 |
| SSMH (4) | 1872962.67 | 6423309.91 |
| SSMH (5) | 1873091.97 | 6423308.12 |
| SSMH (6) | 1873225.94 | 6423306.26 |
| SSMH (7) | 1873252.30 | 6423399.33 |
| SSMH (8) | 1873281.31 | 1873281.31 |
| SSMH (9) | 1873244.31 | 6423287.49 |
| SSMH (10) | 1872596.00 | 6423361.15 |
| SSMH (11) | 1872619.06 | 6423380.30 |
| LATERAL | 1872908.20 | 6423308.16 |

REGISTERED PROFESSIONAL ENGINEER VICTOR H. SWIFT No. C35525 CIVIL STATE OF CALIFORNIA

BAR LENGTH ON ORIGINAL DRAWING EQUALS ONE INCH. ADJUST SCALE ACCORDINGLY

| NO. | DATE | REVISION | BY |
|---|---|---|---|
| | | | |

SONOMA VALLEY COUNTY SANITATION DISTRICT

SCALE: AS SHOWN | DATE: 18 MARCH 2015

DRAWN: ADF

REVIEWED:

SEWER TRUNK REPLACEMENT (AGUA CALIENTE CREEK CROSSING)

DETAILS AND TABLE OF NEW SS MANHOLES

FILE NAME: 7544_XING_CIVIL

CONTRACT NUMBER: 70-712-7 #7

DRAWING NUMBER: C-3

SHEET 5 OF 14

\\scf-data\proj\sanitation\sonoma valley csd\collection\7544-agua_caliente-xing

NOTES:

1. REMOVE APPROXIMATELY 12 LF EXST GROUTED ROCK RIPRAP WALL AND REPURPOSE AS 13' x 20' ROCK RIPRAP EROSION CONTROL BLANKET AREA. SUPPLEMENT WITH ADDITIONAL ROCK OF SIMILAR STYLE AND COLOR AS NEEDED. TO COVER AREA 6 INCHES THICK. SLOPE WESTERLY 3' OF ROCK RIPRAP AT 5:1± FROM 6" THICK TO 0" THICK.
2. ASPHALT OVERLAY AS DETERMINED BY OWNER. 430'± TO ENTRANCE AT VERANO AVE. COMPLETION OF PIPELINE. SEE DETAIL A DRAWING NUMBER C-10.
3. TREE PROTECTION FENCING.
4. TREE PROTECTION STRUCTURE.

REFERENCE LINE CURVE DATA:

| | |
|---|---|
| CURVE 1 | L = 42.10' |
| | R = 30.00' |
| | Delta = 80° 17' 18" |
| CURVE 2 | L = 8.99' |
| | R = 54.52' |
| | Delta = 9° 26' 51" |
| CURVE 3 | L= 8.98' |
| | R= 61.34' |
| | Delta: 8° 23' 50" |
| CURVE 4 | L = 31.42' |
| | R = 20.00' |
| | Delta: 90°00' 00" |

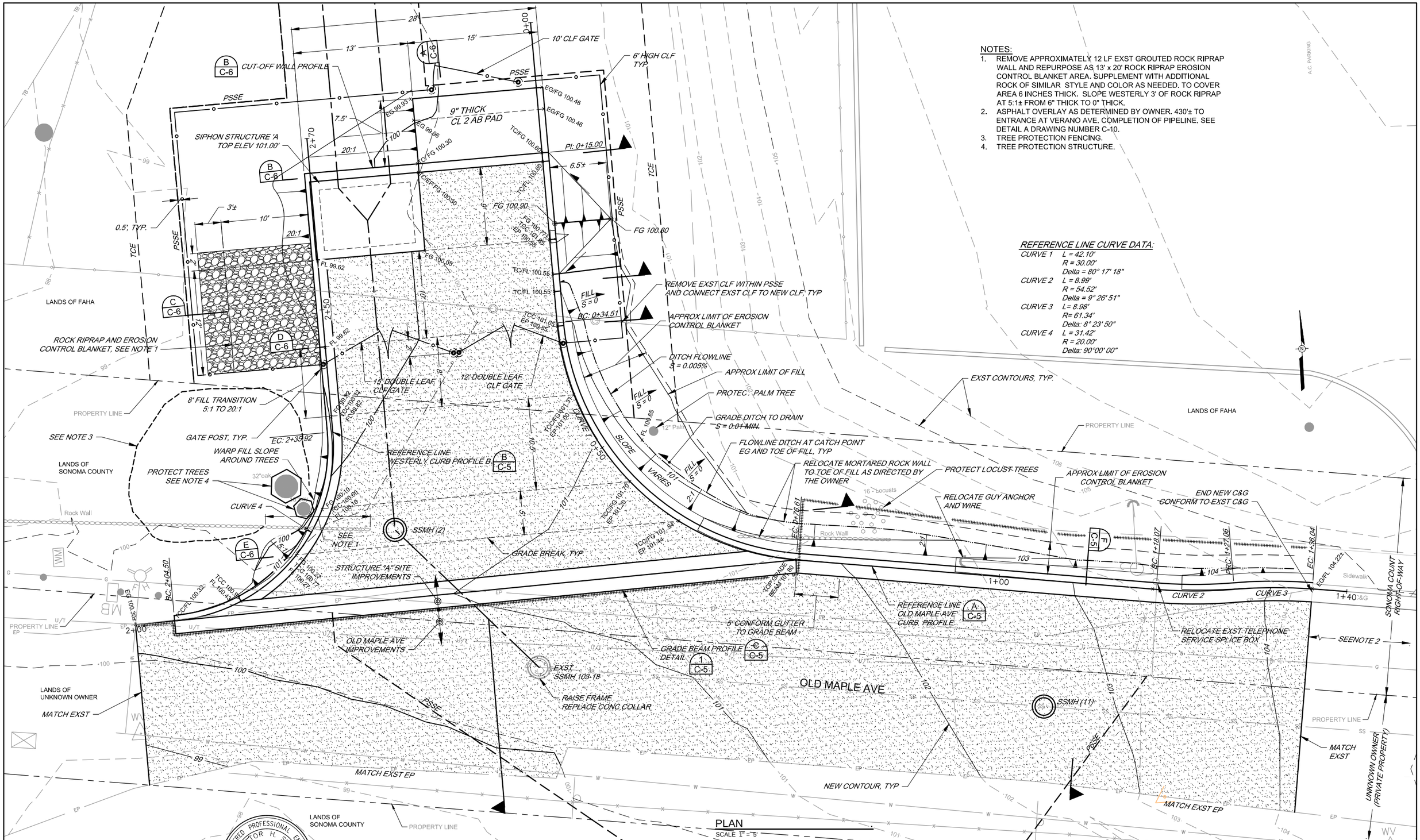


BAR LENGTH ON ORIGINAL DRAWING EQUALS ONE INCH. ADJUST SCALE ACCORDINGLY

REGISTERED PROFESSIONAL ENGINEER VICTOR H. SWIFT No. C35525 CIVIL STATE OF CALIFORNIA

| NO. | DATE | REVISION | BY |
|---|---|---|---|
| | | | |

SONOMA VALLEY COUNTY SANITATION DISTRICT

SCALE: AS SHOWN
DATE: 18 MARCH 2015
DRAWN: ADF
REVIEWED:

SEWER TRUNK REPLACEMENT (AGUA CALIENTE CREEK CROSSING)

SIPHON STRUCTURE "A" AND OLD MAPLE AVENUE GRADING AND PAVEMENT PLAN

FILE NAME: 7544_XING_CIVIL-grading
CONTRACT NUMBER: 70-712-7 #7
DRAWING NUMBER: C-4
SHEET 6 OF 14

\\scf-data\pro\sanitation\sonoma valley cstt\collection\7544-agua_caliente-xing

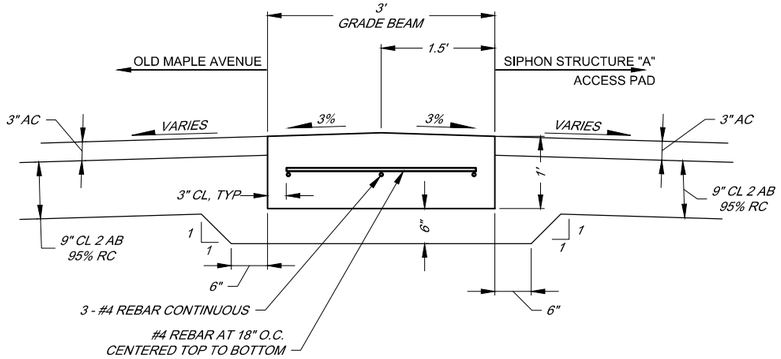


DETAIL - GRADE BEAM (1 / - | 1 / C-4 | 1 / C-5)

N.T.S.

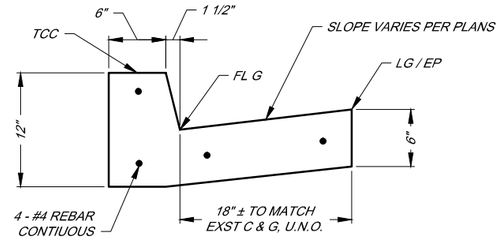


DETAIL (2 / -)

N.T.S.

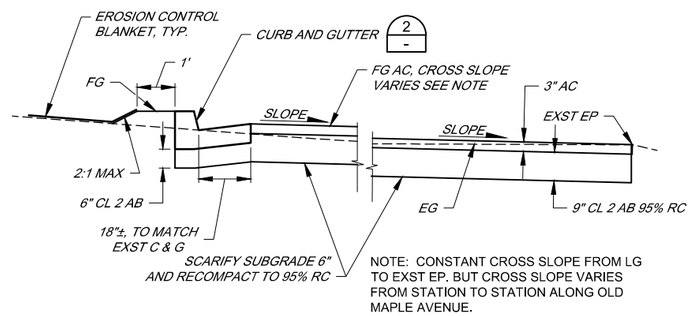


NOTE: CONSTANT CROSS SLOPE FROM LG TO EXST EP. BUT CROSS SLOPE VARIES FROM STATION TO STATION ALONG OLD MAPLE AVENUE.

SECTION (F / C-4)

SCALE: 1" = 2'

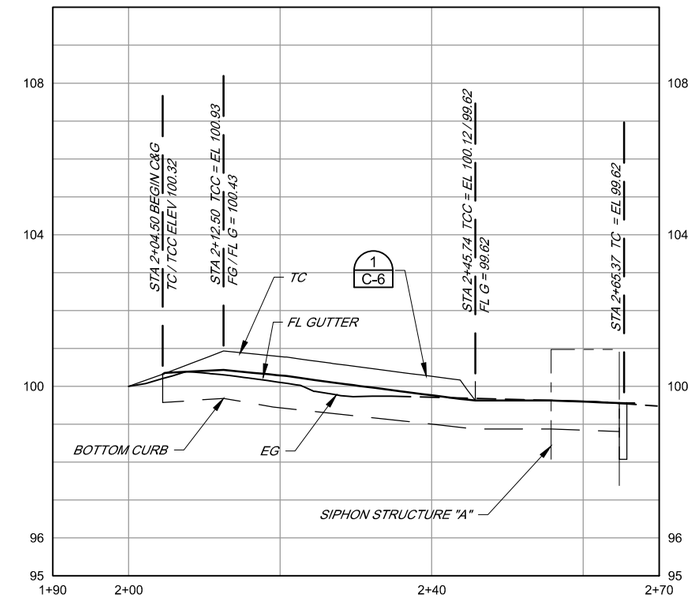


WESTERLY CURB AND GUTTER

PROFILE B (B / C-4)

SCALE: HORIZ 1" = 10'
VERT 1" = 2'

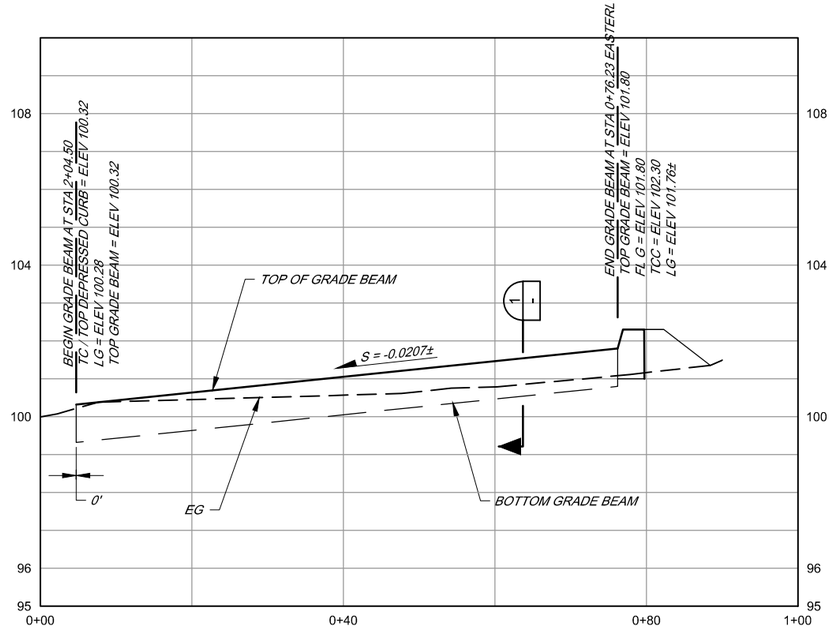


GRADE BEAM

PROFILE (C / C-4)

SCALE: HORIZ 1" = 10'
VERT 1" = 2'

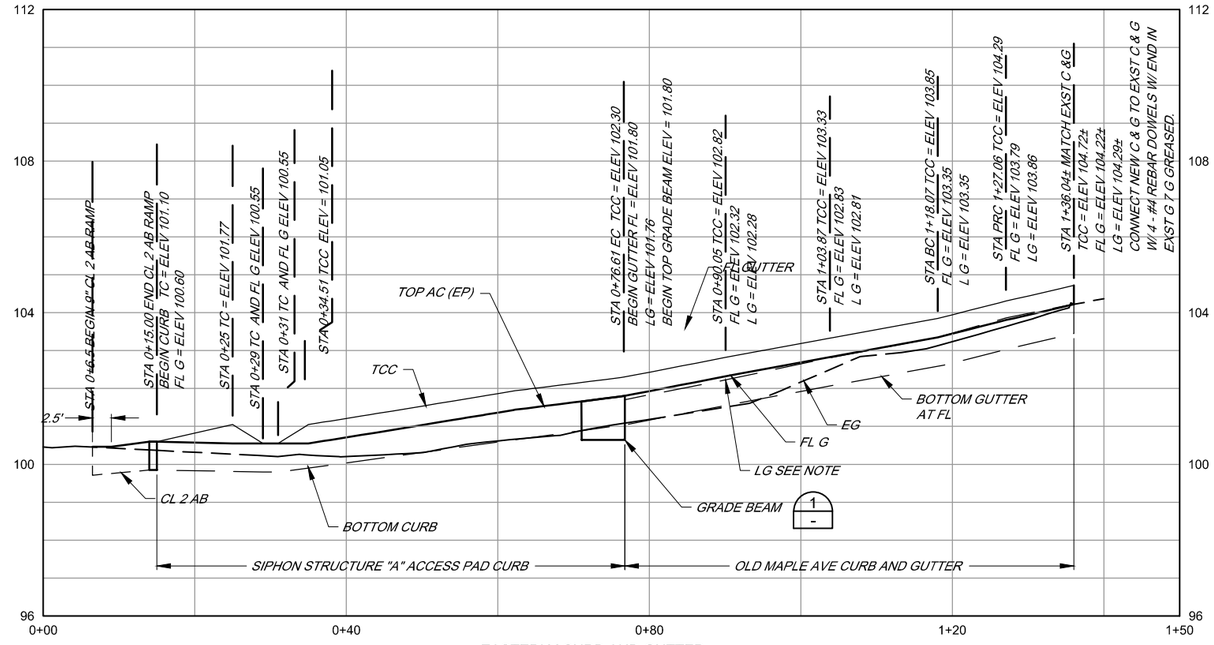


EASTERLY CURB AND GUTTER

PROFILE (A / C-4)

SCALE: HORIZ 1" = 10'
VERT 1" = 2'

NOTE:
LG WARPED TO BELOW FLOWLINE AS INDICATED

REGISTERED PROFESSIONAL ENGINEER
VICTOR H. SWIFT
No. C35525
CIVIL
STATE OF CALIFORNIA

BAR LENGTH ON ORIGINAL DRAWING EQUALS ONE INCH. ADJUST SCALE ACCORDINGLY

| NO. | DATE | REVISION | BY |
|---|---|---|---|

SONOMA VALLEY COUNTY SANITATION DISTRICT

SCALE: AS SHOWN
DATE: 18 MARCH 2015
DRAWN: ADF
REVIEWED:

SEWER TRUNK REPLACEMENT (AGUA CALIENTE CREEK CROSSING)

SHIPON STRUCTURE "A" ACCESS PAD AND OLD MAPLE AVENUE GRADING PROFILES

FILE NAME: 7544_XING_CIVIL-grading
CONTRACT NUMBER: 70-712-7 #7
DRAWING NUMBER: C-5

SHEET 7 OF 14

\\scf-data\pro\sanitation\sonoma valley cstl\collection\7544-agua_caliente-xing

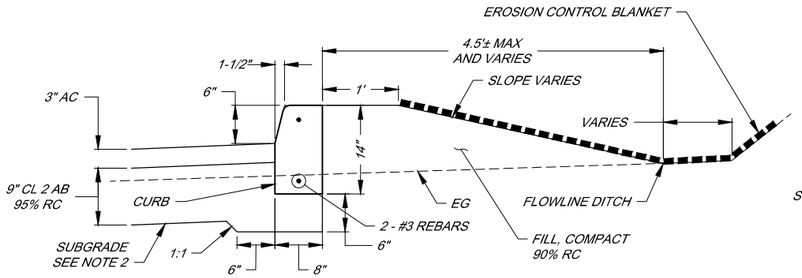


DETAIL 2
N.T.S.

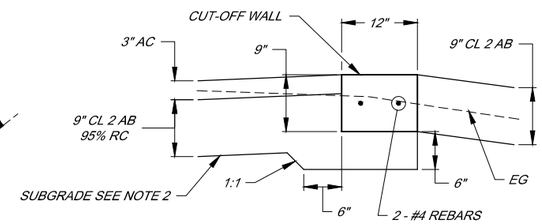


DETAIL 3
N.T.S.

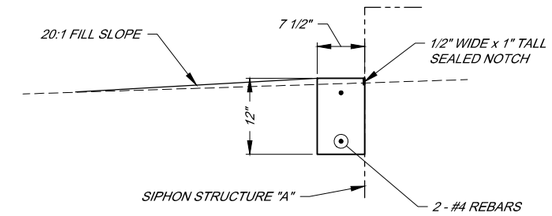


DETAIL 4
N.T.S.

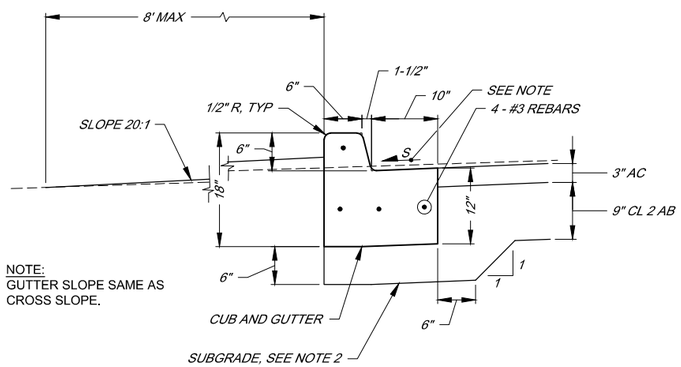


NOTE:
GUTTER SLOPE SAME AS CROSS SLOPE.

DETAIL 1
N.T.S.

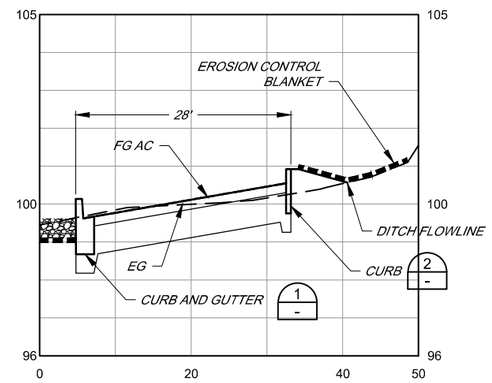


SECTION D C-4
SCALE: HORIZ 1" = 10'
VERT 1" = 2'

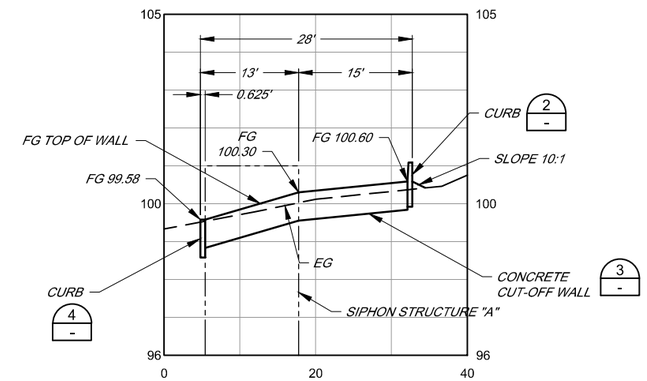


SECTION B C-4
SCALE: HORIZ 1" = 10'
VERT 1" = 2'

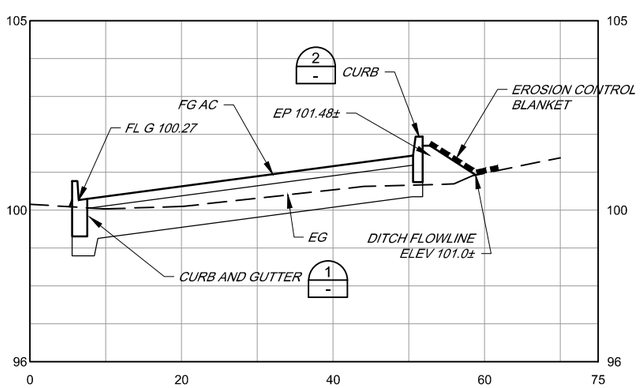


SECTION E C-4
SCALE: HORIZ 1" = 10'
VERT 1" = 2'

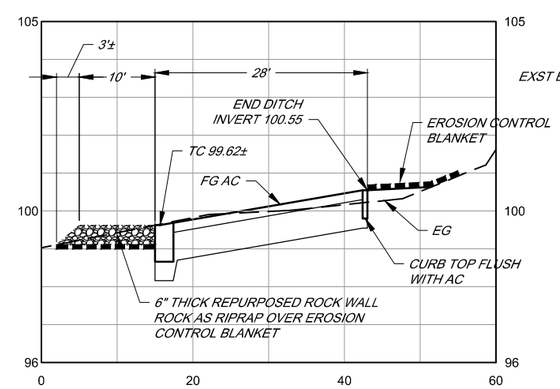


SECTION C C-4
SCALE: HORIZ 1" = 10'
VERT 1" = 2'

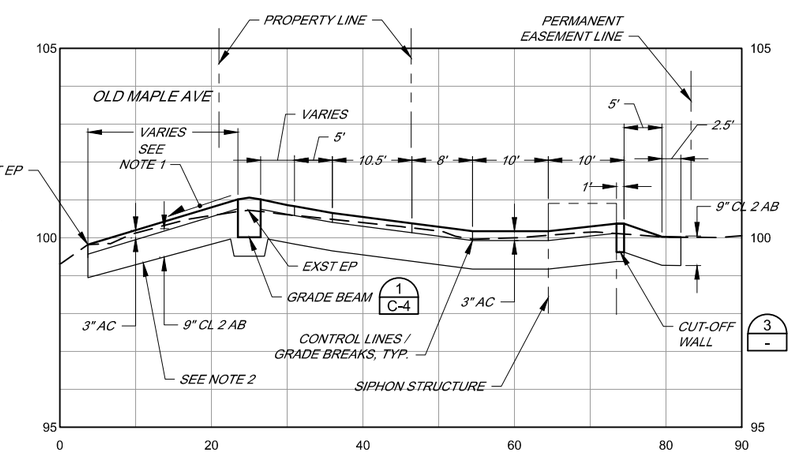


SECTION A C-4
SCALE: HORIZ 1" = 10'
VERT 1" = 2'

NOTES:
1. STRAIGHT GRADE BETWEEN LIP GUTTER AND EDGE GRADE BEAM TO EXST. EP. TYP. CROSS SLOPE VARIES ALONG OLD MAPLE AVE.
2. SCARIFY SUBGRADE 6" AND RECOMPACT TO 95% RC.

BAR LENGTH ON ORIGINAL DRAWING EQUALS ONE INCH. ADJUST SCALE ACCORDINGLY

REGISTERED PROFESSIONAL ENGINEER
VICTOR H. SWIFT
No. C35525
CIVIL
STATE OF CALIFORNIA

| NO. | DATE | REVISION | BY |
|---|---|---|---|

SONOMA VALLEY COUNTY SANITATION DISTRICT

SCALE: AS SHOWN
DATE: 18 MARCH 2015
DRAWN: ADF
REVIEWED:

SEWER TRUNK REPLACEMENT (AGUA CALIENTE CREEK CROSSING)

GRADING SECTIONS AND DETAILS -SIPHON STRUCTURE 'A'

FILE NAME: 7544_XING_CIVIL-grading
CONTRACT NUMBER: 70-712-7 #7
DRAWING NUMBER: C-6
SHEET 8 OF 14

\\sd-data\projsanitation\sonoma valley csd\collection\7544-agua_caliente-xing

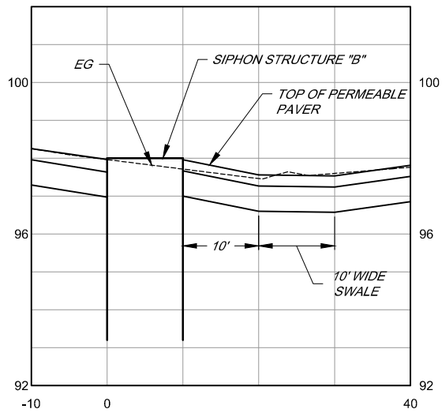


SECTION B

SCALE: HORIZ 1" = 10'
VERT 1" = 2'

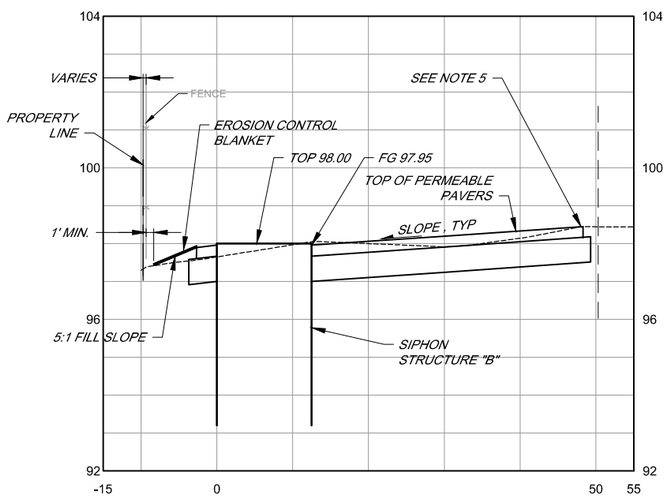


SECTION A

SCALE: HORIZ 1" = 10'
VERT 1" = 2'

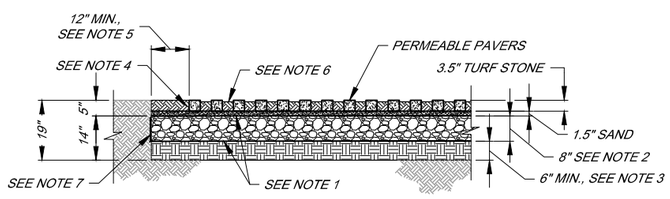


DETAIL - ACCESS PERMEABLE PAVERS SURFACE

SCALE 1" = 2'

NOTES DETAIL:

1. GEOTECH FILTER FABRIC.
2. CL 2 AB 95% RC.
3. SCARIFY, MOISTURE CONDITION, MIN. 95% R.C.
4. PLASTIC GRID EDGE SUPPORT WEDGE.
5. EXTEND SAND AND CRUSHED ROCK 12" MIN BEYOND EDGE OF PERMEABLE PAVERS.
6. FILL WITH A MIXTURE OF SEED, FERTILIZER AND TOP SOIL CELLS TO 1/2" BELOW TOP.
7. TURN UP GEOTECH FABRIC AT SIDE OF BASE.

BAR LENGTH ON ORIGINAL DRAWING EQUALS ONE INCH. ADJUST SCALE ACCORDINGLY

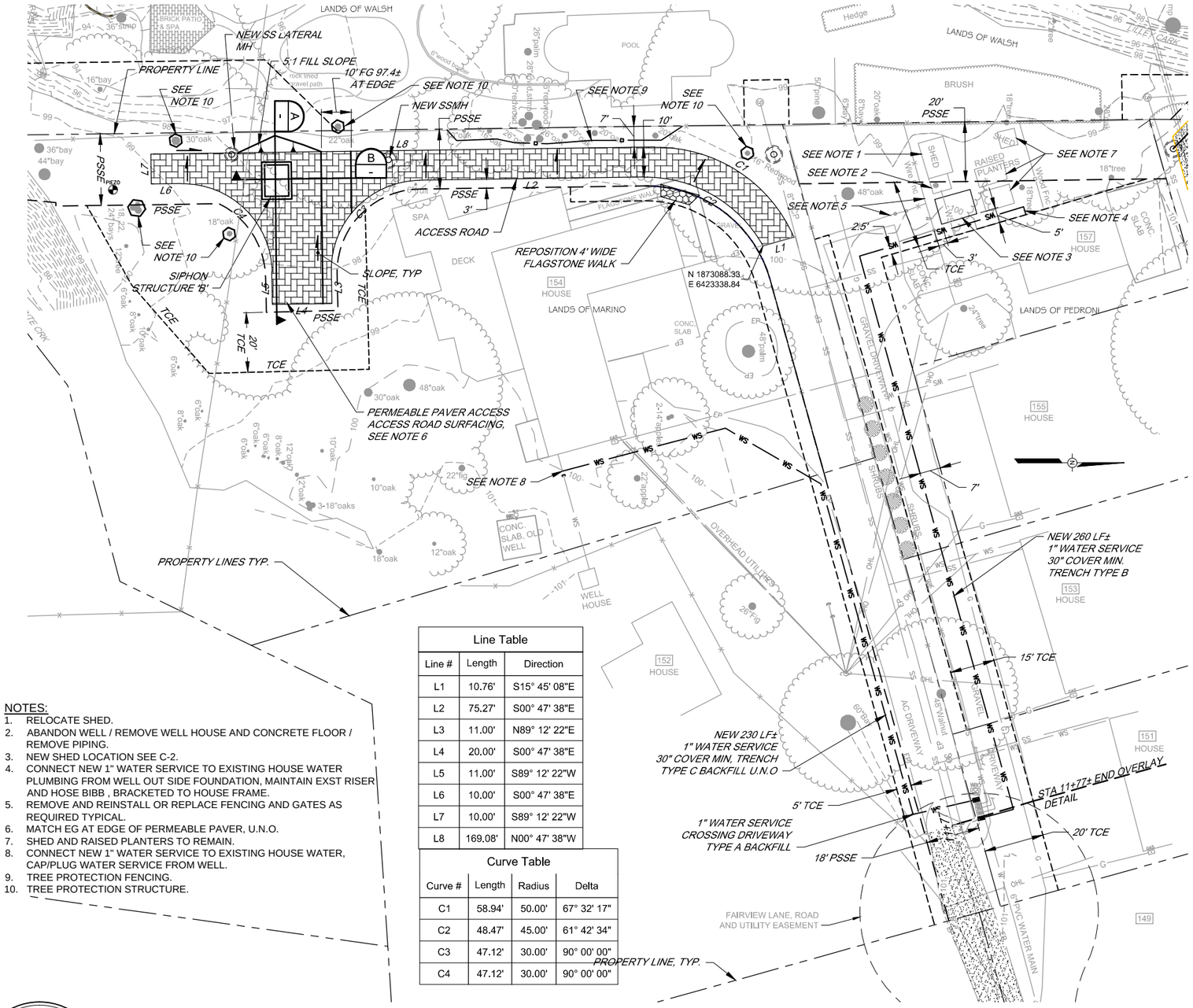


NOTES:

1. RELOCATE SHED.
2. ABANDON WELL / REMOVE WELL HOUSE AND CONCRETE FLOOR / REMOVE PIPING.
3. NEW SHED LOCATION SEE C-2.
4. CONNECT NEW 1" WATER SERVICE TO EXISTING HOUSE WATER PLUMBING FROM WELL OUT SIDE FOUNDATION, MAINTAIN EXST RISER AND HOSE BIBB , BRACKETED TO HOUSE FRAME.
5. REMOVE AND REINSTALL OR REPLACE FENCING AND GATES AS REQUIRED TYPICAL.
6. MATCH EG AT EDGE OF PERMEABLE PAVER, U.N.O.
7. SHED AND RAISED PLANTERS TO REMAIN.
8. CONNECT NEW 1" WATER SERVICE TO EXISTING HOUSE WATER, CAP/PLUG WATER SERVICE FROM WELL.
9. TREE PROTECTION FENCING.
10. TREE PROTECTION STRUCTURE.

Line Table

| Line # | Length | Direction |
|---|---|---|
| L1 | 10.76' | S15° 45' 08"E |
| L2 | 75.27' | S00° 47' 38"E |
| L3 | 11.00' | N89° 12' 22"E |
| L4 | 20.00' | S00° 47' 38"E |
| L5 | 11.00' | S89° 12' 22"W |
| L6 | 10.00' | S00° 47' 38"E |
| L7 | 10.00' | S89° 12' 22"W |
| L8 | 169.08' | N00° 47' 38"W |

Curve Table

| Curve # | Length | Radius | Delta |
|---|---|---|---|
| C1 | 58.94' | 50.00' | 67° 32' 17" |
| C2 | 48.47' | 45.00' | 61° 42' 34" |
| C3 | 47.12' | 30.00' | 90° 00' 00" |
| C4 | 47.12' | 30.00' | 90° 00' 00" |

PLAN

SCALE 1" = 20'

REGISTERED PROFESSIONAL ENGINEER VICTOR H. SWIFT No. C35525 CIVIL STATE OF CALIFORNIA

| NO. | DATE | REVISION | BY |
|---|---|---|---|
| | | | |

SONOMA VALLEY COUNTY SANITATION DISTRICT

SCALE: AS SHOWN
DATE: 18 MARCH 2015
DRAWN: ADF
REVIEWED:

SEWER TRUNK REPLACEMENT (AGUA CALIENTE CREEK CROSSING)

SIPHON STRUCTURE "B " ACCESS, GRADING AND PAVING PLAN, AND DETAILS / SHED RELOCATION AND WATER SERVICES PLAN

FILE NAME: 7544_XING_CIVIL
CONTRACT NUMBER: 70-712-7 #7
DRAWING NUMBER: C-7
SHEET 9 OF 14

\\sd-data\proj\sanitation\sonoma valley csd\collection\7544-agua_caliente-xing

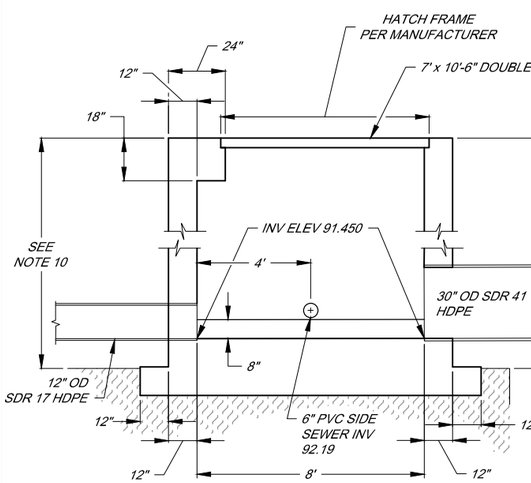


SECTION C
SCALE: 3/8" = 1'-O"

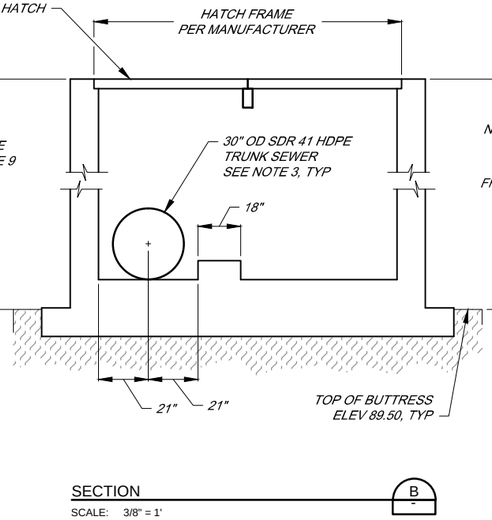


SECTION B
SCALE: 3/8" = 1'

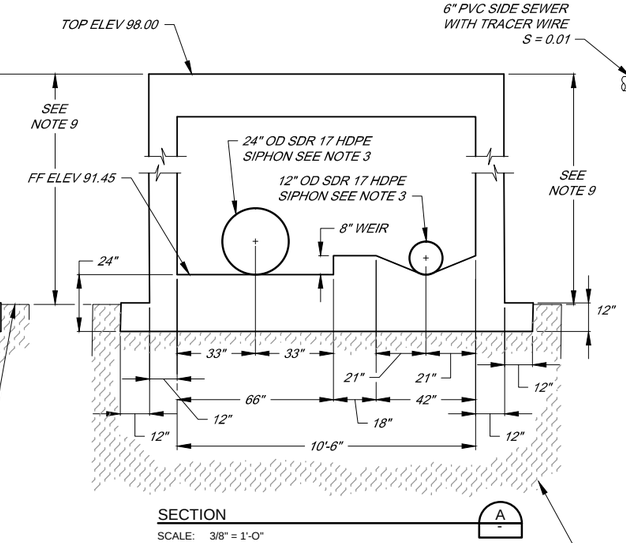


SECTION A
SCALE: 3/8" = 1'-O"

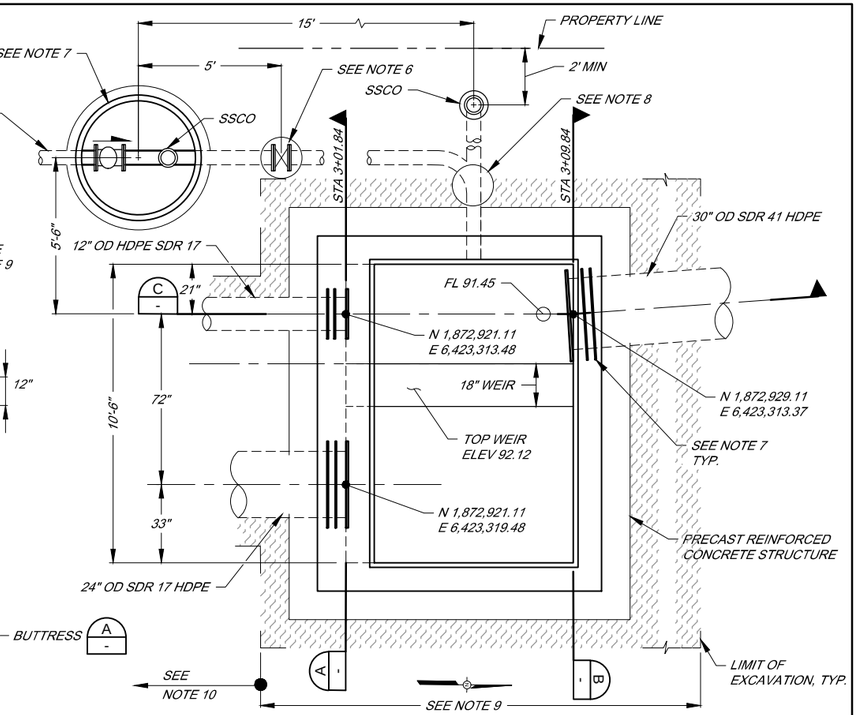


PLAN - SIPHON STRUCTURE 'B'
SCALE 3/8" = 1'-0"

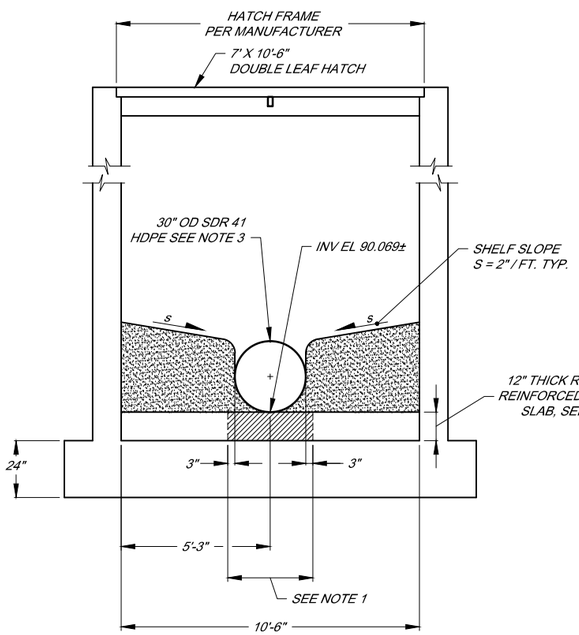


SECTION E
SCALE: 3/8" = 1'-O"

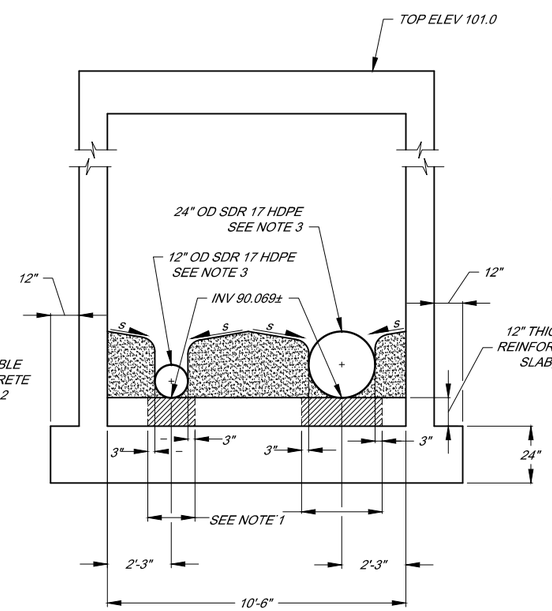


SECTION D
SCALE: 3/8" = 1'-O"

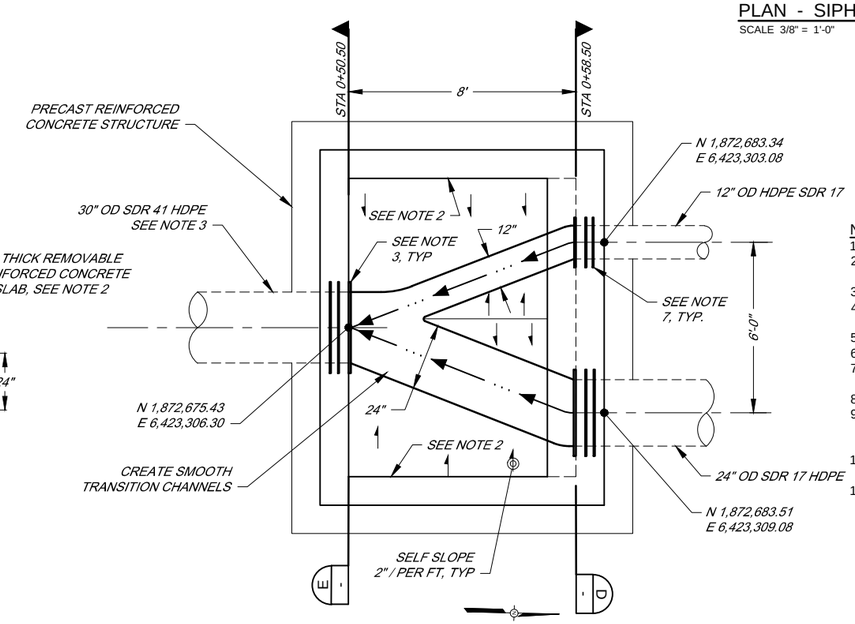


PLAN - SIPHON STRUCTURE 'A'
SCALE 3/8" = 1'-0"

NOTES:
1. NO REINFORCEMENT IN WALL THIS AREA.
2. COLD JOINT BETWEEN 12" SLAB AND BOTTOM AND WALLS OF STRUCTURE.
3. FUSED PIPE WALL ANCHORS.
4. APPROXIMATE EXCAVATION LIMITS AND LIMITS OF CDF BUTTRESS FILL.
5. SIDE SEWER TRACER WIRE BOX.
6. GATE VALVE, STD. DWG. 111
7. 4' DIA SSMH, BACKFLOW CHECK VALVE AND CLEANOUT, STD. DWG. 127
8. TRACER WIRE BOX.
9. BACKFILL STRUCTURE ABOVE CDF BUTTRESS FILL WITH CDF WITHIN 3' OF GROUND SURFACE. TOP 3' OF BACKFILL SIMILAR TO TRENCH TYPE C.
10. BACKFILL STRUCTURE ABOVE CDF BUTTRESS FILL SIMILAR TO TRENCH TYPE C.
11. DOUBLE WATER STOP TYP. OF ALL PIPE PENETRATIONS.

BAR LENGTH ON ORIGINAL DRAWING EQUALS ONE INCH. ADJUST SCALE ACCORDINGLY

REGISTERED PROFESSIONAL ENGINEER
VICTOR H. SWIFT
No. C35525
CIVIL
STATE OF CALIFORNIA

| NO. | DATE | REVISION | BY |
|---|---|---|---|
| | | | |

SONOMA VALLEY COUNTY
SANITATION DISTRICT

SCALE: AS SHOWN
DATE: 18 MARCH 2015
DRAWN: ADF
REVIEWED:

SEWER TRUNK REPLACEMENT (AGUA CALIENTE CREEK CROSSING)
REINFORCED CONCRETE PRECAST
SIPHON STRUCTURES 'A' AND 'B' DETAILS

FILE NAME: 7544_XING_DETAILS
CONTRACT NUMBER: 70-712-7 #7
DRAWING NUMBER: C-8
SHEET 10 OF 14

\\sd-data\proj\sanitation\sonoma valley csd\collection\7544-agua_caliente-xing

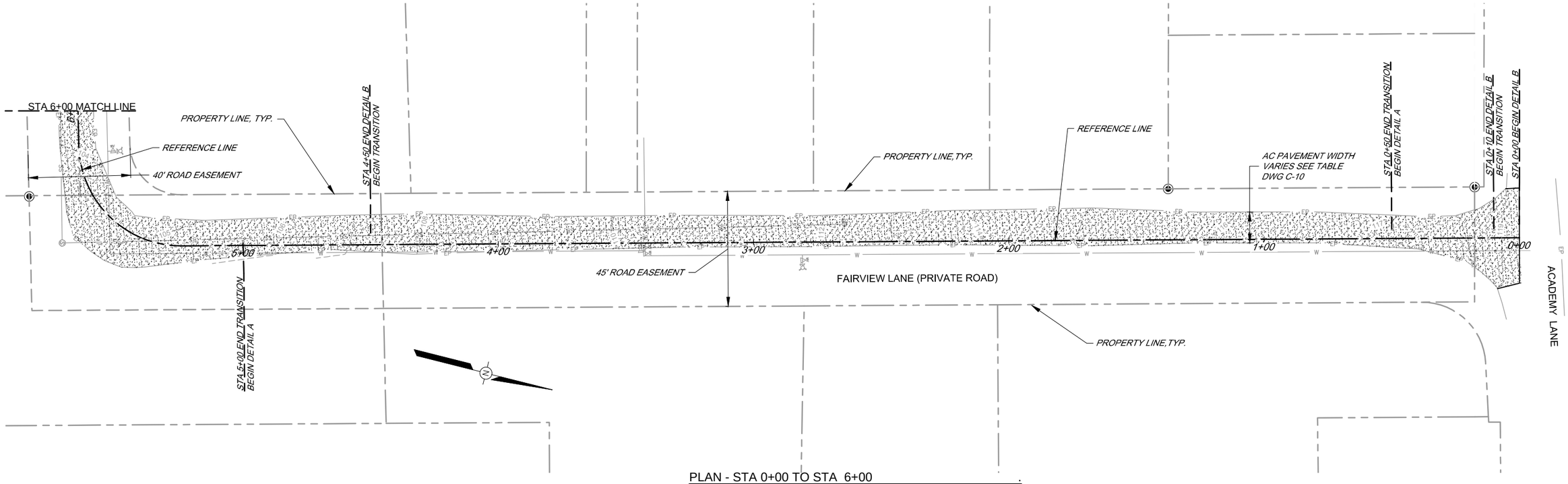


PLAN - STA 0+00 TO STA 6+00

SCALE 1" = 20'

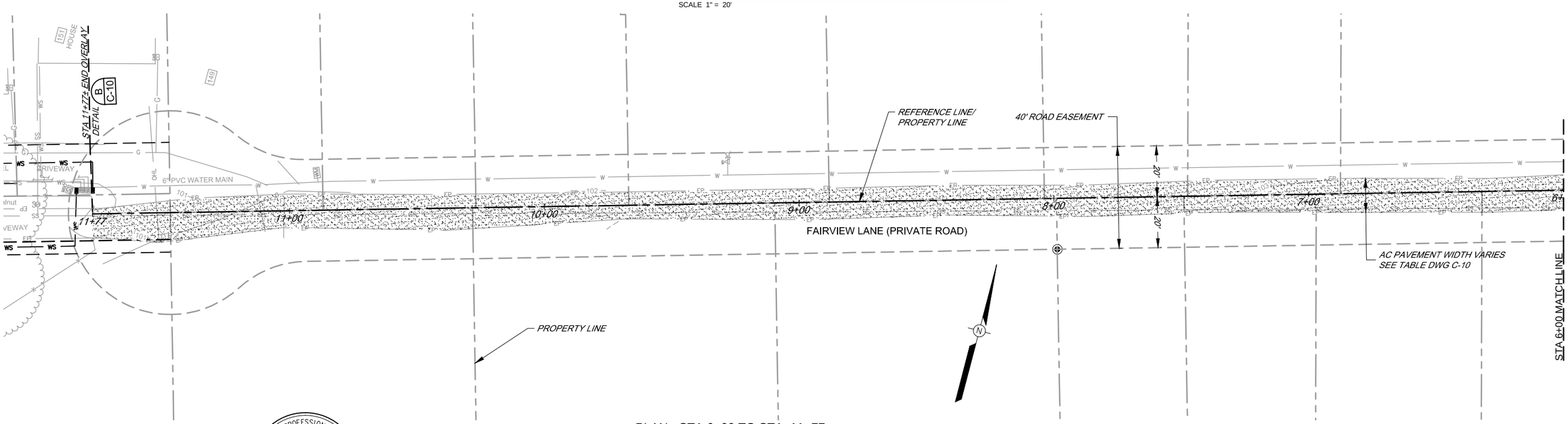


PLAN - STA 6+00 TO STA 11+77

SCALE 1" = 20'

BAR LENGTH ON ORIGINAL DRAWING EQUALS ONE INCH. ADJUST SCALE ACCORDINGLY

REGISTERED PROFESSIONAL ENGINEER
VICTOR H. SWIFT
No. C35525
CIVIL
STATE OF CALIFORNIA

| NO. | DATE | REVISION | BY |
|---|---|---|---|
| | | | |

SONOMA VALLEY COUNTY SANITATION DISTRICT

SCALE: AS SHOWN
DATE: 18 MARCH 2015
DRAWN: ADF
REVIEWED:

SEWER TRUNK REPLACEMENT (AGUA CALIENTE CREEK CROSSING)

PLAN - FAIRVIEW LANE RESURFACING

FILE NAME: 7544_XING_CIVIL
CONTRACT NUMBER: 70-712-7 #7
DRAWING NUMBER: C-9
SHEET 11 OF 14

\\sd-data\proj\sanitation\sonoma valley csd\collection\7544-agua_caliente-xing

| REFERENCE LINE | OFFSET TO EDGE OF PAVEMENT | | |
|---|---|---|---|
| STATION | OFFSET RIGHT | OFFSET LEFT | TOTAL WIDTH |
| 0+00 | 19.60 | 19.32 | 38.92 |
| 0+05.00 | 19.60 | 19.32 | 38.92 |
| 0+08.85 | 16.09 | 19.32 | 35.41 |
| 0+20.95 | 10.00 | 9.15 | 19.15 |
| 0+40.00 | 8.70 | 4.07 | 12.77 |
| 0+79.38 | 10.62 | 1.52 | 9.10 |
| 1+27.02 | 10.84 | 1.27 | 12.11 |
| 1+67.82 | 12.66 | 2.07 | 14.73 |
| 2+22.09 | 12.03 | 1.41 | 13.44 |
| 2+76.25 | 10.35 | 1.78 | 12.13 |
| 3+29.07 | 10.83 | 1.65 | 12.48 |
| 3+80.59 | 10.63 | 2.51 | 13.14 |
| 4+33.25 | 12.02 | 3.81 | 15.83 |
| 4+65.00 | 11.47 | 1.76 | 13.23 |
| 5+15.14 | 9.95 | 5.38 | 15.33 |
| 5+42.33 | 8.14 | 13.61 | 21.75 |

| REFERENCE LINE | OFFSET TO EDGE OF PAVEMENT | | |
|---|---|---|---|
| STATION | OFFSET RIGHT | OFFSET LEFT | TOTAL WIDTH |
| 5+48.71 | 6.65 | 15.03 | 21.68 |
| 5+58.85 | 7.49 | 15.68 | 23.16 |
| 5+86.66 | 6.51 | 7.60 | 14.11 |
| 6+29.43 | 5.10 | 8.21 | 13.31 |
| 6+81.83 | 5.98 | 7.36 | 13.34 |
| 7+37.11 | 6.17 | 6.48 | 16.65 |
| 7+87.91 | 5.00 | 7.28 | 12.28 |
| 8+41.22 | 5.81 | 5.84 | 11.65 |
| 8+99.81 | 5.38 | 6.88 | 12.26 |
| 9+67.64 | 5.24 | 5.35 | 10.59 |
| 10+38.09 | 5.40 | 8.64 | 14.04 |
| 11+03.12 | 6.57 | 6.64 | 13.21 |
| 11+38.05 | 5.54 | 10.25 | 15.78 |
| 11+51.33 | 4.24 | 11.62 | 15.80 |
| 11+73.12 | 2.15 | 9.55 | 11.70 |
| 11+76.89 | 2.16 | 9.50 | 11.66 |

FAIRVIEW LANE ROADWAY WIDTH - TABLE .

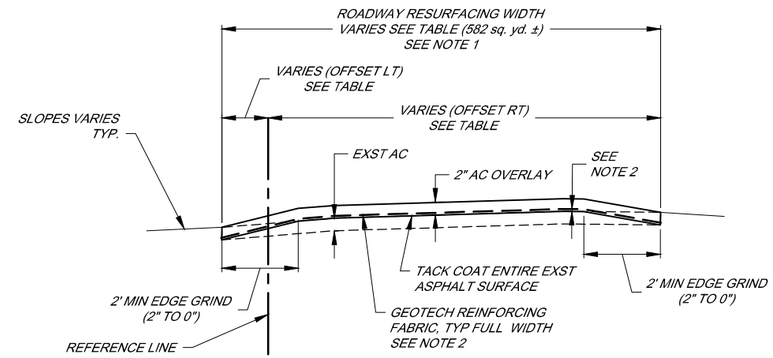


STA 0+50 TO STA 4+50

DETAIL A

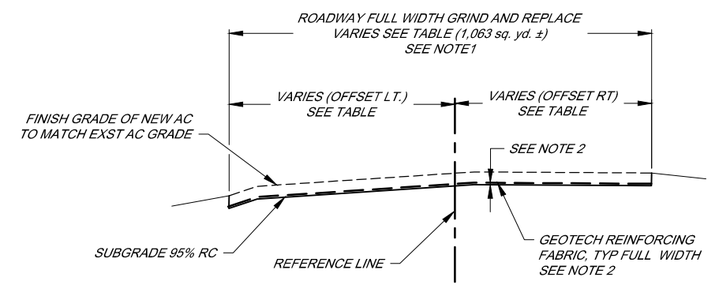


STA 0+00 TO 0+10 AND STA 5+00 TO STA 11+77±

DETAIL B

NOTES:
1. TACK COAT FULL WIDTH AND BOTH EDGES.
2. TACK COAT TOP OF 1/2" BASE, THEN PLACE GEOTECH REINFORCING FABRIC OVER ASPHALT BASE COURSE, FOLLOWED BY TACK COAT OVER GEOTECH FABRIC, THEN FOLLOWED BY FINAL 1 1/2" LIFT ASPHALT.
3. TRANSITION AREA 93 sq yd ± (STA 0+10 TO 0+50 AND STA 4+50 TO 5+00)

TYPICAL SECTIONS ROAD RESURFACING .

NOT TO SCALE

BAR LENGTH ON ORIGINAL DRAWING EQUALS ONE INCH, ADJUST SCALE ACCORDINGLY

REGISTERED PROFESSIONAL ENGINEER VICTOR H. SWIFT No. C35525 CIVIL STATE OF CALIFORNIA

| NO. | DATE | REVISION | BY |
|---|---|---|---|

SONOMA VALLEY COUNTY SANITATION DISTRICT

SCALE: AS SHOWN
DATE: 18 MARCH 2015
DRAWN: ADF
REVIEWED:

SEWER TRUNK REPLACEMENT (AGUA CALIENTE CREEK CROSSING)

FAIRVIEW LANE RESURFACING DETAILS AND TABLE

FILE NAME: 7544_XING_CIVIL
CONTRACT NUMBER: 70-712-7 #7
DRAWING NUMBER: C-10
SHEET 12 OF 14

\\sd-data\proj\sanitation\sonoma valley csd\collection\7544-agua_caliente-xing

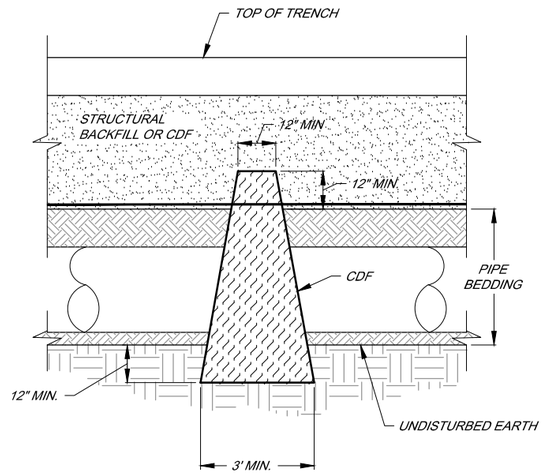


NOTES:
1. GUARD AGAINST PIPE OR STRUCTURE BUOYANCY.
2. EXCAVATE DAM 12" MIN INTO TRENCH SIDE WALLS.
3. DAM AT 300' INTERVALS MAX. AND AT DOWNSTREAM SIDE OF MANHOLES AND / OR AT UPSTREAM ENDS OF GUIDE BORE METHOD CASINGS.

## TRENCH DAM DETAIL
N.T.S.

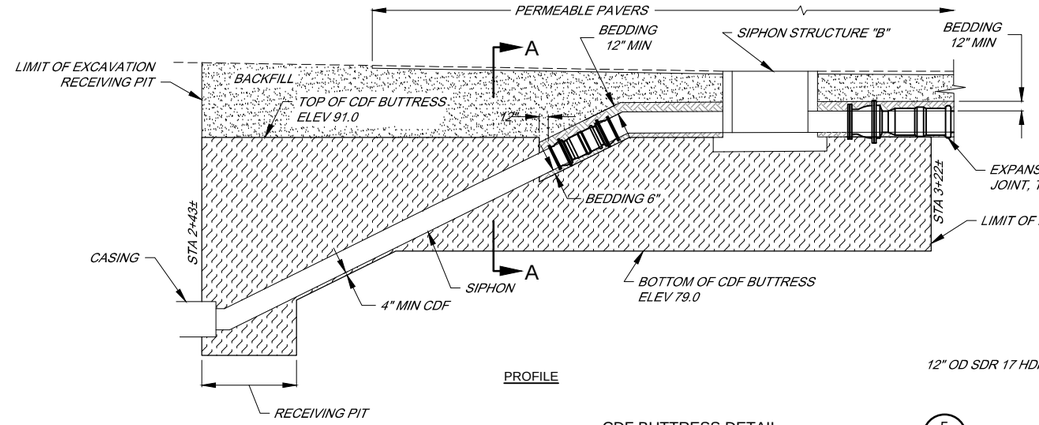


PROFILE

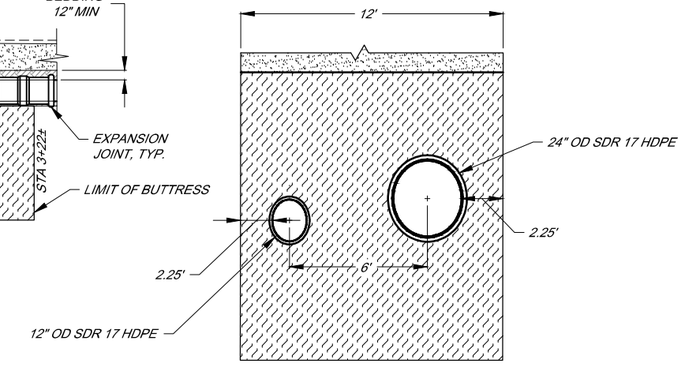


SECTION A-A

## CDF BUTTRESS DETAIL
N.T.S.

5
C-1

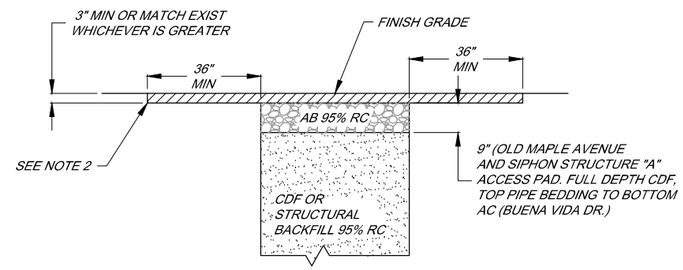


STREET AREAS
AND PAVED DRIVEWAYS
TRENCH TYPE A

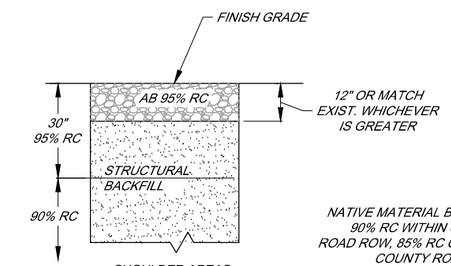


SHOULDER AREAS
AND ROCKED DRIVEWAYS
TRENCH TYPE B

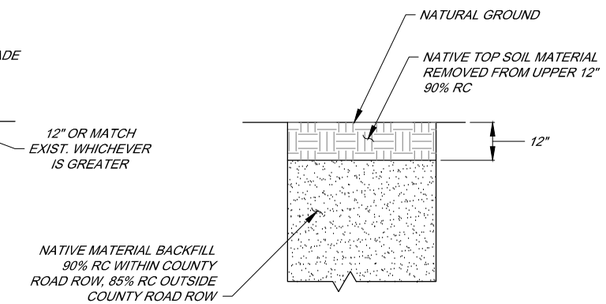


UNDEVELOPED AREAS
TRENCH TYPE C

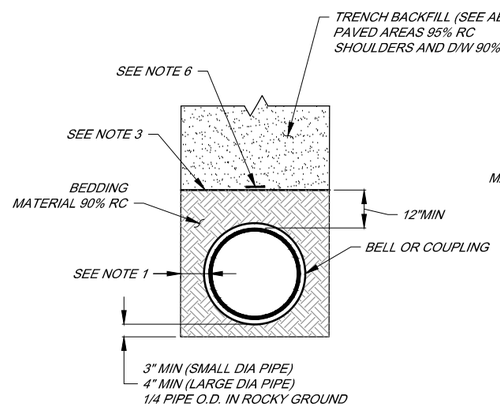


STABLE TRENCH

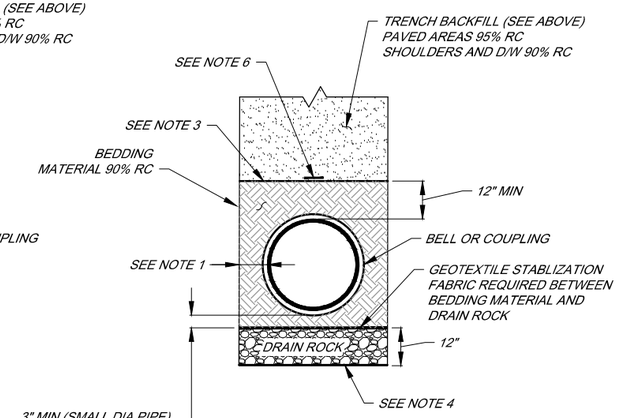


UNSTABLE TRENCH
(AS DETERMINED BY OWNER)

NOTES:

1. SMALL PIPE DIAMETER (18" OR LESS): 6" MIN., 9" MAX. PLUS ALLOWANCE FOR TRENCH SHORING. LARGE PIPE DIAMETER (GREATER THAN 18"): 9" MIN., 12" MAX. PLUS ALLOWANCE FOR TRENCH SHORING.
2. NEATLY CUT PAVEMENT 3 FEET FROM EDGES OF TRENCH PRIOR TO FINAL TRENCH RESURFACING.
3. GEOTEXTILE FILTER FABRIC REQUIRED BETWEEN BEDDING AND BACKFILL, FILTER FABRIC NOT REQUIRED IN STREET AREAS WHEN CDF IS USED.
4. GEOTEXTILE STABILIZATION FABRIC REQUIRED WHEN SUBGRADE IS SOFT MORE THAN 15" BELOW BOTTOM OF PIPE.
5. CONTRACTOR HAS THE OPTION OF USING CONTROLLED DENSITY FILL WITHIN STREET AREAS OR PAVED DRIVEWAYS.
6. INSTALL MAGNETIC DETECTABLE CONDUCTOR WARNING TAPE, BRIGHTLY COLORED PLASTIC COVERING, IMPRINTED WITH "SEWER" IN LARGE LETTERS AFTER A DEPTH OF 12" BEDDING HAS BEEN PLACED OVER PIPE.

## BEDDING AND BACKFILL DETAILS
N.T.S.

BAR LENGTH ON ORIGINAL DRAWING EQUALS ONE INCH. ADJUST SCALE ACCORDINGLY

REGISTERED PROFESSIONAL ENGINEER
VICTOR H. SWINGLE
No. C35525
CIVIL
STATE OF CALIFORNIA

| NO. | DATE | REVISION | BY |
|---|---|---|---|
| | | | |

SONOMA VALLEY COUNTY SANITATION DISTRICT

SCALE: AS SHOWN
DATE: 18 MARCH 2015
DRAWN: ADF
REVIEWED:

SEWER TRUNK REPLACEMENT (AGUA CALIENTE CREEK CROSSING)

TRENCH DETAILS

FILE NAME: 7544_XING_DETAILS
CONTRACT NUMBER: 70-712-7 #7
DRAWING NUMBER: D-1
SHEET 13 OF 14

\\sd-data\proj\sanitation\sonoma valley csd\collection\7544-agua_caliente-xing

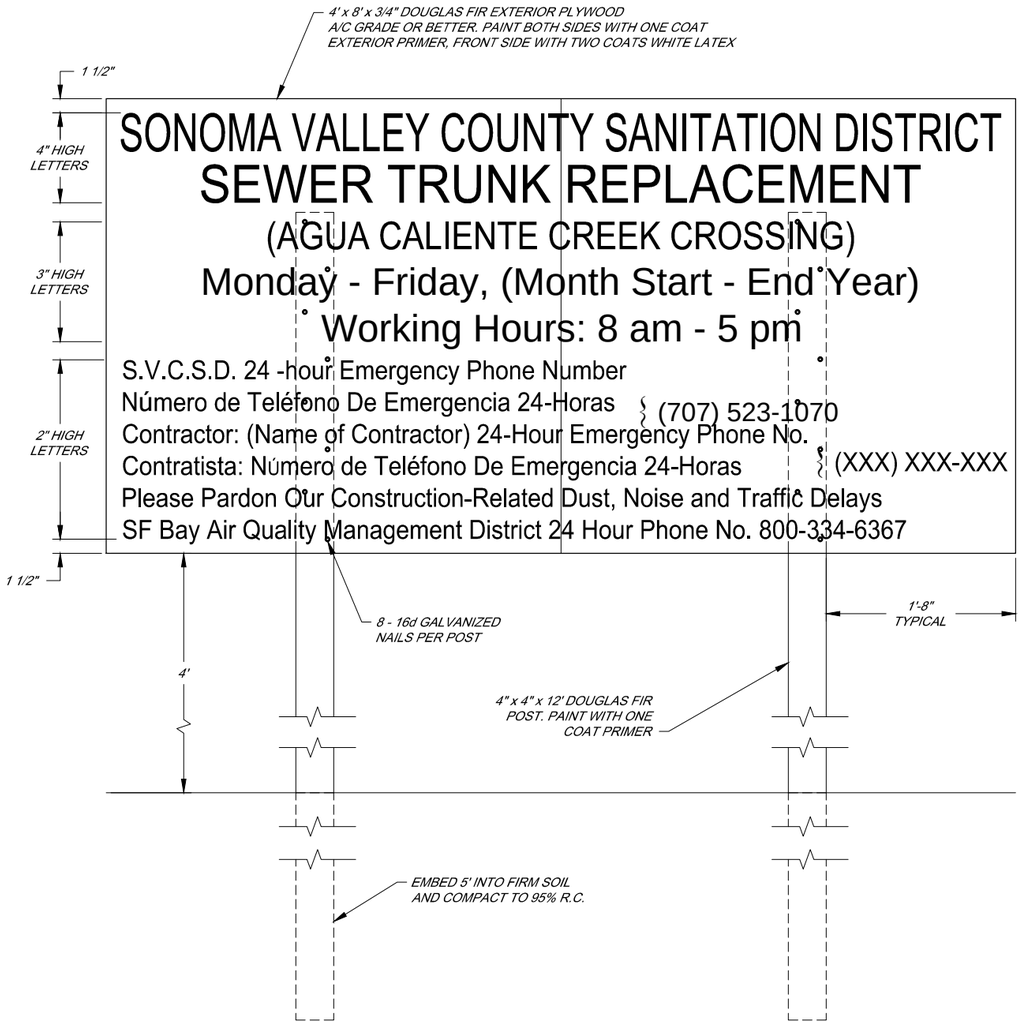


PROJECT FUNDING IDENTIFICATION SIGN
(2 REQUIRED) SEE DRAWING G-1
FOR APPROXIMATE LOCATIONS
N.T.S.

\\scf-data\pro\sanitation\sonoma valley csd\collection\7544-agua_caliente-xing

BAR LENGTH ON ORIGINAL DRAWING EQUALS ONE INCH. ADJUST SCALE ACCORDINGLY

REGISTERED PROFESSIONAL ENGINEER
PETER H. SWAFFER
No. C35525
CIVIL
STATE OF CALIFORNIA

| NO. | DATE | REVISION | BY |
|---|---|---|---|
| | | | |

SONOMA VALLEY COUNTY SANITATION DISTRICT

SCALE: AS SHOWN
DATE: 18 MARCH 2015
DRAWN: ADF
REVIEWED:

SEWER TRUNK REPLACEMENT (AGUA CALIENTE CREEK CROSSING)

MISCELLANEOUS DETAILS

FILE NAME: 7544_XING_DETAILS
CONTRACT NUMBER: 70-712-7 #7
DRAWING NUMBER: D-2