Russian River County Sanitation District
Treatment Plant

BIOLOGICAL NUTRIENT REMOVAL

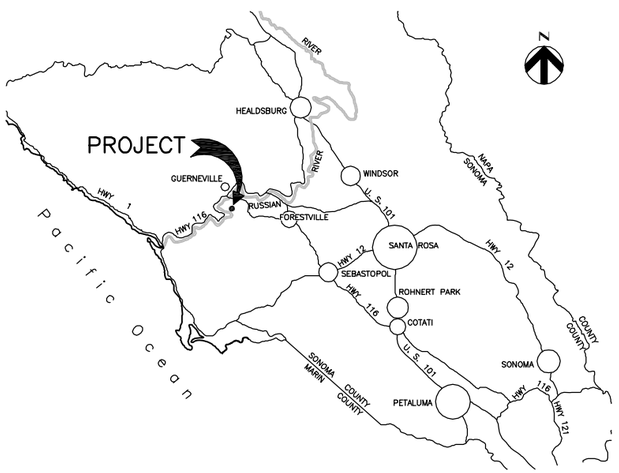

VICINITY MAP
NTS

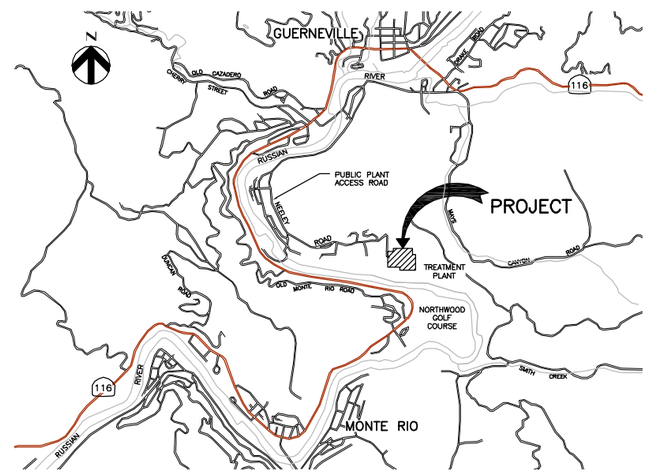

LOCATION MAP
NTS

DRAWING LIST

GENERAL

G01 TITLE SHEET, LOCATION AND VICINITY MAPS, DRAWING LIST AND GENERAL NOTES
G02 SYMBOL LEGEND AND ABBREVIATIONS
G03 HYDRAULIC PROFILE AND FLOW SCHEMATIC
G04 OVERALL SITE PLAN
G05 CONSTRUCTION AND DEMOLITION SEQUENCING

DEMOLITION

D01 AERATION BASINS DEMOLITION PLAN
D02 BLOWER BUILDING DEMOLITION PLAN
D03 AERATION BASINS AND BLOWER DEMOLITION PHOTOS

STRUCTURAL

S01 GENERAL STRUCTURAL NOTES AND INSPECTION NOTES
S02 STANDARD CONCRETE DETAILS 1
S03 STANDARD CONCRETE DETAILS 2
S04 STANDARD REINFORCEMENT DETAILS
S05 TYPICAL RAILING DETAILS
S06 AERATION BASINS LOWER LEVEL PLAN
S07 AERATION BASINS UPPER LEVEL PLAN
S08 AERATION BASINS SECTIONS 1
S09 AERATION BASINS SECTIONS 2
S10 AERATION BASINS DETAILS 1
S11 AERATION BASINS DETAILS 2

MECHANICAL

M01 GENERAL MECHANICAL NOTES
M02 STANDARD MECHANICAL DETAILS 1
M03 STANDARD MECHANICAL DETAILS 2
M04 STANDARD MECHANICAL DETAILS 3
M05 STANDARD MECHANICAL DETAILS 4
M06 STANDARD MECHANICAL DETAILS 5
M07 NOT USED
M08 AERATION BASINS OVERALL PLAN
M09 AERATION BASIN 1 LOWER PIPING PLAN
M10 AERATION BASIN 2 LOWER PIPING PLAN
M11 AERATION BASIN 1 UPPER PIPING PLAN
M12 AERATION BASIN 2 UPPER PIPING PLAN
M13 AERATION BASINS SECTIONS 1
M14 AERATION BASINS SECTIONS 2
M15 AERATION BASINS SECTIONS AND DETAILS
M16 BLOWER BUILDING MECHANICAL PLAN AND SECTIONS

ELECTRICAL

E01 ELECTRICAL LEGEND
E02 AERATION BASINS ELECTRICAL PLAN
E03 BLOWER BUILDING ELECTRICAL PLAN
E04 ELECTRICAL SINGLE LINE DIAGRAM MCC-5-100 (EXISTING LOADS)
E05 ELECTRICAL SINGLE LINE DIAGRAM MCC-5-100 (ADDED LOADS)
E06 ELECTRICAL CONTROL DIAGRAMS
E07 ELECTRICAL DETAILS 1
E08 ELECTRICAL DETAILS 2
E09 AERATION BASIN NORTH WALL CONDUIT INSTALLATION

INSTRUMENTATION

I01 INSTRUMENTATION LEGEND
I02 PROCESS AND INSTRUMENTATION DIAGRAM – LOW PRESSURE AIR BLOWERS
I03 PROCESS AND INSTRUMENTATION DIAGRAM – AERATION BASIN 1
I04 PROCESS AND INSTRUMENTATION DIAGRAM – AERATION BASIN 2

GENERAL NOTES

1. **HORIZONTAL DATUM:**
   CALIFORNIA COORDINATE SYSTEM ZONE 2, NAD 1927

2. **PROJECT BENCHMARK:**
   FOUND 2" BRASS DISK @ THE SOUTHWESTERLY CORNER OF TOP OF STEPS LEADING DOWN TO FILTER ASSEMBLY AREA. DATUM MSL 1929. "B.M. 2 – ELEVEVATION 70.23"

BAR LENGTH ON ORIGINAL DRAWING EQUALS ONE INCH. ADJUST SCALE ACCORDINGLY

HDR Engineering, Inc.

REGISTERED PROFESSIONAL ENGINEER CRAIG A. OLSON NO. 39819 EXP. 12-31-13 CIVIL STATE OF CALIFORNIA 05-10-13

NO	DATE	REVISION	BY
	05-14-2013	ISSUED FOR BID	CAO

RUSSIAN RIVER COUNTY SANITATION DISTRICT

SCALE: NONE
DATE: 5/10/2013
DRAWN: RGS
REVIEWED:

BIOLOGICAL NUTRIENT REMOVAL
TITLE SHEET, LOCATION AND VICINITY MAPS
DRAWING LIST, AND GENERAL NOTES

FILE NAME: 190077_G01.dwg
CONTRACT NUMBER: 70-713-7#1A
DRAWING NUMBER: G01
SHEET 1 OF 47

C:\pwworking\soc\d0407107\190077_001

SITE PLAN SYMBOLOGY

- EMBANKMENT SLOPE
- 500 — CONTOUR
- VEGETATION (SIZE)
- CO — CLEANOUT
- MH — MANHOLE
- MW — MONITORING WELL
- PZ — PIEZOMETER
- CB — STORM DRAIN CATCH BASIN
- UV — UTILITY VAULT
- PP — POWER POLE
- TP — TELEPHONE POLE
- FH — FIRE HYDRANT
- YH–X — YARD HYDRANT
- 75.5 — EXISTING SPOT ELEVATION
- 75.8 — FINISHED SPOT ELEVATION
- CP–X — HORIZONTAL CONTROL POINT
- BENCHMARK
- TH–"X" — IDENTIFICATION AND APPROXIMATE LOCATION OF SOIL TEST HOLE
- DOWNGUY
- EXTERIOR PAD MOUNTED TRANSFORMER
- POLE – MOUNTED TRANSFORMER
- Y — ELECTRICAL HANDHOLE OR MANHOLE Y – MHX OR HHX, WHERE X INDICATES SEQUENCE NUMBER

NOTES:

1. UTILITIES THAT ARE SUSPENDED ABOVE GRADE ARE DESIGNATED BY THE PREFIX "OH" (OVERHEAD).

- T — TELEPHONE LINE
- E — ELECTRIC LINE
- C — COMMUNICATION
- HANDRAIL AND GUARDRAIL
- PIPELINE
- LARGE PIPELINE
- UTILITY BENEATH STRUCTURE
- RAILROAD
- DRAINAGE FLOW
- NATURAL WATERWAY
- X — X — CHAIN LINK FENCE
- X — X — FIELD FENCE
- PROPERTY LINE
- CENTERLINE
- RB — ROCK BERM
- SF — SILT FENCE
- EASEMENT
- LIMITS OF CONSTRUCTION
- ROW
- WETLANDS BOUNDARY

GENERAL SYMBOLOGY

ARROW INDICATES DIRECTION OF PLAN NORTH — N

PLAN
1/4" = 1'–0"
PLAN TITLE

SECTION LETTER
FLAG INDICATES DIRECTION OF SECTION CUT
X / XXX — DRAWING WHERE SECTION IS LOCATED *
SECTION CUT MARKER

SECTION
3/8" = 1'–0"
SECTION LETTER — X / XXX
DRAWING WHERE SECTION VIEW IS FIRST CUT *
SECTION TITLE

DETAIL NUMBER
/ XXX — DRAWING WHERE DETAIL IS LOCATED
DETAIL MARKER
FOR REFERENCING DETAILS INCLUDED IN DRAWING SET

DETAIL
3" = 1'–0"
DETAIL NUMBER — # / XXX
* DRAWING WHERE DETAIL WAS CALLED OUT
DETAIL TITLE

* FOR COMMON DETAILS AND SECTIONS OR DETAILS THAT ARE CUT OR CALLED OUT ON MULTIPLE DRAWINGS, DRAWING NUMBER IS REPLACED BY A DASH (–)

MATERIALS IN PLAN/SECTION

- CHECKERED PLATE (PLAN)
- CONCRETE (PLAN AND/OR SECTION)
- CONCRETE MASONRY (PLAN AND/OR SECTION)
- DEMOLITION (PLAN AND/OR SECTION)
- EARTH (SECTION)

IDENTIFICATION SYMBOLOGY

PIPING

FIGURE — 24" EFF — EXAMPLE
LINE SIZE — 24"
SERVICE — FINAL EFFLUENT

SERVICE DESIGNATOR	SERVICE
LPA	LOW PRESSURE AIR
MLR	MIXED LIQUOR RECYCLE
PI	PLANT INFLUENT

ABBREVIATIONS

AB	ANCHOR BOLT, AERATION BASIN
ABAN	ABANDON
ABC	AGGREGATE BASE COURSE
AC	ASPHALT CONCRETE, ACRES
AD	ADDENDUM, AREA DRAIN
ADDL	ADDITIONAL
ADH	ADHESIVE
ADJ	ADJUSTABLE, ADJACENT
AFD	ADJUSTABLE FREQUENCY DRIVE
AFF	ABOVE FINISH FLOOR
AFG	ABOVE FINISH GRADE
AGGR	AGGREGATE
AI	AREA INLET
AIT	ANALYZER INDICATOR TRANSMITTER
ALIG	ALIGNMENT
ALT	ALTERNATE, ALTITUDE
ALUM	ALUMINUM
ANC	ANCHOR
APRX	APPROXIMATE
APVD	APPROVED
ASSY	ASSEMBLY
AUTO	AUTOMATIC
AVE	AVENUE
AVG	AVERAGE
AWG	AMERICAN WIRE GAGE
B TO B	BACK TO BACK
BAL	BALANCE
BC	BOLT CENTER, BOLT CIRCLE
BD	BOARD
BE	BOTH ENDS
BF	BOTH FACES, BOTTOM FACE
BITUM	BITUMINOUS
BKG	BACKING
BL	BASE LINE
BLDG	BUILDING
BM	BENCHMARK
BOP	BOTTOM OF PIPE
BOT	BOTTOM
BP	BASE PLATE
BS	BOTH SIDES
BTW	BETWEEN
BTWLD	BUTT WELD
BU	BUILT–UP
BW	BOTH WAYS
BYP	BYPASS
C TO C	CENTER TO CENTER
CAP	CAPACITY
CDF	CONTROLLED–DENSITY FILL
CE	CONCRETE EDGE
CF	CUBIC FEET (FOOT)
CHFR	CHAMFER
CIP	CAST–IN–PLACE
CJ	CONSTRUCTION JOINT
CLJ	CONTROL JOINT
CLR	CLEAR
CMP	CORRUGATED METAL PIPE
CON	CONCENTRIC
CONC	CONCRETE
CONN	CONNECTION
CONST	CONSTRUCTION
CONT	CONTINUOUS
COOR	COORDINATE
CP	CONTROL POINT
CPLG	COUPLING
CPVC	CHLORINATED POLYVINYL CHLORIDE
CTR	CENTER
CTRL	CONTROL
CVT	CULVERT
CU	CUBIC
CY	CUBIC YARD
D	DEEP, DRAIN
Db	DECIBEL
DBL	DOUBLE
DEG	DEGREE
DEMO	DEMOLITION
DEP	DEPRESSED
DET	DETAIL
DI	DROP INLET, DUCTILE IRON
DIA	DIAMETER
DIM	DIMENSION
DISCH	DISCHARGE
DIST	DISTANCE, DISTRIBUTION
DMJ	DOUBLE MECHANICAL JOINT
DN	DOWN
DP	DEPTH
DUP	DUPLICATE
DWG	DRAWING
E	EAST
EA	EACH
ECC	ECCENTRIC
EF	EACH FACE
EFF	EFFLUENT
EG	EXISTING GRADE
EL	ELBOW, ELEVATION
ELEC	ELECTRICAL
EMBD	EMBEDDED
EMER	EMERGENCY
ENCL	ENCLOSURE
ENGR	ENGINEER
ENTR	ENTRANCE
EOP	EDGE OF PAVEMENT
EQ	EQUAL
EQUIP	EQUIPMENT
EQUIV	EQUIVALENT
ES	EACH SIDE
EST	ESTIMATE
EW	EACH WAY
EWEF	EACH WAY, EACH FACE
EWTB	EACH WAY, TOP AND BOTTOM
EXC	EXCAVATION
EXP	EXPANSION, EXPOSED
EXST	EXISTING
EXT	EXTERIOR, EXTERNAL, EXTENSION
F TO F	FACE TO FACE
FAB	FABRICATE
FB	FLAT BAR
FC	FLUSHING CONNECTION
FCA	FLANGED COUPLING ADAPTER
FD	FLOOR DRAIN
FDTN	FOUNDATION
FE	FLANGED END
FES	FLARED END SECTION
FF	FAR FACE, FLAT FACE
FG	FINISHED GRADE
FIN	FINISH
FIT	FLOW INDICATOR TRANSMITTER
FL	FLOW, FLOW LINE
FLEX	FLEXIBLE
FLG	FLANGE
FLR	FLOOR
FN	FENCE
FOC	FACE OF CONCRETE
FPT	FEMALE PIPE THREAD
FRP	FIBERGLASS REINFORCED PLASTIC
FS	FAR SIDE
FT	FEET, FOOT
FTG	FOOTING, FITTING
FUT	FUTURE
FVNR	FULL VOLTAGE NON REVERSING
FW	FIELD WELD
FWD	FORWARD
FWE	FURNISHED WITH EQUIPMENT
FXTR	FIXTURE
GA	GAGE (METAL THICKNESS)
GAL	GALLON
GALV	GALVANIZED
GB	GRADE BREAK
GD	GUARD
GEN	GENERAL
GJ	GROOVED JOINT
GND	GROUND
GP	GUY POLE
GR	GRADE
GRTG	GRATING
GVL	GRAVEL
H	HIGH
HD	HEAD
HDPE	HIGH DENSITY POLYETHYLENE
HDR	HEADER
HDW	HARDWARE
HEX	HEXAGONAL
HFCA	HARNESSED FLANGED COUPLING ADAPTER
HM	HOLLOW METAL
HORIZ	HORIZONTAL
HP	HIGH POINT
HPC	HORIZONTAL POINT OF CURVATURE
HPT	HORIZONTAL POINT OF TANGENCY
HSS	HOLLOW STRUCTURAL SHAPE
HT	HEIGHT
HV	HIGH VOLTAGE
HVAC	HEATING, VENTILATING AND AIR CONDITIONING
HWL	HIGH WATER LEVEL
HYD	HYDRAULIC
HZ	HERTZ, CYCLES PER SECOND
ID	INSIDE DIAMETER, INTERIOR DIMENSION
IE	INVERT ELEVATION
IF	INSIDE FACE
IN	INCH
INC	INCLUDE
INF	INFLUENT
INT	INTERSECTION
INTR	INTERMEDIATE, INTERIOR
INV	INVERT
IPS	IRON PIPE SIZE
IPT	INTERNAL PIPE THREAD
IR	INSIDE RADIUS
IRR	IRRIGATION
ISO	ISOMETRIC
JCT	JUNCTION
JT	JOINT
K	KIP
KSI	THOUSAND POUNDS PER SQUARE INCH
KO	KNOCK OUT
L	ANGLE, LENGTH
LATL	LATERAL
LB	LAG BOLT
LDR	LEADER
LE	LIFTING EYE
LF	LINEAR FOOT
LG	LONG
LIN	LINEAR
LNG	LONGITUDINAL
LOC	LOCATION
LP	LOW POINT
LPA	LOW PRESSURE AIR
LR	LONG RADIUS
LT	LEFT
LTG	LIGHTING
LTL	LINTEL
LWC	LIGHTWEIGHT CONCRETE
LWL	LOW WATER LEVEL
MAINT	MAINTENANCE
MATL	MATERIAL
MAX	MAXIMUM
MC	MECHANICAL COUPLING
MCC	MOTOR CONTROL CENTER
MCP	MOTOR CIRCUIT PROTECTOR, MASTER CONTROL PANEL
MED	MEDIUM
MFR	MANUFACTURER
MH	MANHOLE
MIN	MINIMUM
MISC	MISCELLANEOUS
MJ	MECHANICAL JOINT
ML	MIXED LIQUOR
MOV	MOTOR OPERATED VALVE
MSL	MEAN SEA LEVEL
MT	MOUNT
MW	MONITORING WELL
N	NORTH
NA	NOT APPLICABLE
NC	NORMALLY CLOSED
NF	NEAR FACE
NIC	NOT IN CONTRACT
NO	NORMALLY OPEN, NUMBER
NOM	NOMINAL
NPS	NOMINAL PIPE SIZE
NS	NEAR SIDE
NTS	NOT TO SCALE
NWL	NORMAL WATER LEVEL
O TO O	OUT TO OUT
OC	ON CENTER
OD	OUTSIDE DIAMETER
OF	OUTSIDE FACE
OH	OVERHEAD
OPNG	OPENING
OPP	OPPOSITE
OPT	OPTIONAL
OR	OUTSIDE RADIUS
ORIG	ORIGINAL
OVFL	OVERFLOW
PAR	PARALLEL
PC	POINT OF CURVE, PRECAST
PCC	POINT OF COMPOUND CURVATURE
PCF	POUNDS PER CUBIC FOOT
PCS	PROJECT CLASSIFIED SYSTEM
PCT	PERCENT
PE	PLAIN END
PED	PEDESTAL
PEN	PENETRATION
PERF	PERFORATED
PERM	PERMANENT
PERP	PERPENDICULAR
PG	PRESSURE GAGE
PI	PLANT INFLUENT
PIT	PRESSURE INDICATOR TRANSMITTER
PL	PLATE, PROPERTY LINE
PLCS	PLACES
PLF	POUNDS PER LINEAR FOOT
PNL	PANEL
PP	POLYPROPYLENE
PRC	POINT OF REVERSE CURVATURE
PREFAB	PREFABRICATED
PRELIM	PRELIMINARY
PREP	PREPARE
PRES	PRESSURE
PRI	PRIMARY
PROT	PROTECTION
PS	PIPE SUPPORT
PSF	POUNDS PER SQUARE FOOT
PSI	POUNDS PER SQUARE INCH
PSIA	POUNDS PER SQUARE INCH ABSOLUTE
PSIG	POUNDS PER SQUARE INCH GAGE
PT	POINT, POINT OF TANGENCY
PVC	POLYVINYL CHLORIDE
PVMT	PAVEMENT
R&R	REMOVE AND REPLACE
R&S	REMOVE AND SALVAGE
R	RADIUS
RAS	RETURN ACTIVATED SLUDGE
RB	ROCK BERM
RED	REDUCER
REF	REFERENCE
REINF	REINFORCING
REM	REMOVE
REQD	REQUIRED
RET	RETAINING, RETURN
REV	REVISION, REVERSE
RFG	ROOFING
RGH	ROUGH
RND	ROUND
RNG	RUNNING
RO	ROUGH OPENING
ROW	RIGHT–OF–WAY
RSP	ROCK SLOPE PROTECTION
RT	RIGHT
RY	READY
SA	SUPPLY AIR
SAN	SANITARY
SC	SOLID CORE
SCH	SCHEDULE
SEC	SECONDARY, SECONDS
SECT	SECTION
SEP	SEPARATE
SF	SQUARE FOOT, SILT FENCE
SHT	SHEET
SIM	SIMILAR
SL	SLOPE
SLTD	SLOTTED
SLV	SLEEVE
SMLS	SEAMLESS
SOG	SLAB ON GRADE
SPA	SPACING
SPEC	SPECIFICATION
SPLY	SUPPLY
SQ	SQUARE
SR	SHORT RADIUS
SST	STAINLESS STEEL
STA	STATION
STD	STANDARD
STIR	STIRRUP
STL	STEEL
STOR	STORAGE
STR	STRUCTURAL, STRAIGHT
SUSP	SUSPENDED
SY	SQUARE YARD
SYM	SYMBOL
SYMM	SYMMETRICAL
T&B	TOP AND BOTTOM
TAN	TANGENT
TBM	TEMPORARY BENCHMARK
TCE	TEMPORARY CONSTRUCTION EASEMENT
TEMP	TEMPORARY, TEMPERATURE
THD	THREAD
THK	THICK
TOB	TOP OF BOLT, TOP OF BERM
TOC	TOP OF CONCRETE
TOF	TOP OF FOOTING
TOG	TOP OF GRATING
TOP	TOP OF PLATE
TOPO	TOPOGRAPHY
TOS	TOE OF SLOPE
TOW	TOP OF WALL
TRANS	TRANSITION
TRD	TRENCH DRAIN
TYP	TYPICAL
UG	UNDERGROUND
UNO	UNLESS NOTED OTHERWISE
UTIL	UTILITY
UV	ULTRAVIOLET
V	VENT
VAC	VACUUM
VB	VAPOR BARRIER
VC	VERTICAL CURVE
VEL	VELOCITY
VENT	VENTILATION
VERT	VERTICAL
VFD	VARIABLE FREQUENCY DRIVE
VIF	VERIFY IN FIELD
VOL	VOLUME
VPI	VERTICAL POINT OF INTERSECTION
VPT	VERTICAL POINT OF TANGENCY
W/	WITH
W/O	WITHOUT
W	WEST
WAS	WASTE ACTIVATED SLUDGE
WD	WIDTH
WL	WATER LEVEL
WLD	WELDED
WM	WIRE MESH
WS	WATERSTOP, WATER SURFACE
WT	WEIGHT, WATER TIGHT
WWF	WELDED WIRE FABRIC
XP	EXPLOSION–PROOF
XS	EXTRA STRONG
XSECT	CROSS SECTION
XXS	DOUBLE EXTRA STRONG
YH	YARD HYDRANT
YS	YIELD STRENGTH

IDENTIFICATION SYMBOLOGY

EQUIPMENT IDENTIFICATION

FIGURE — RWP–001 — EXAMPLE
SERVICE ABBREVIATION — INDICATES RECYCLED WATER
EQUIPMENT ABBREVIATION — INDICATES PUMP
EQUIPMENT NUMBER — PUMP 001

EQUIPMENT ABBREVIATIONS

B	BLOWER
M	MIXER
PMP	PUMP
RWP	RECYCLED WATER PUMP
SG	SLIDE GATE

NOTES:

1. THESE ABBREVIATIONS APPLY TO ENTIRE SET OF CONTRACT DRAWINGS.
2. LISTING OF ABBREVIATIONS DOES NOT IMPLY THAT ALL ABBREVIATIONS ARE USED IN THE CONTRACT DRAWINGS.
3. ABBREVIATIONS SHOWN ON THIS DRAWING INCLUDE VARIATIONS OF A WORD. FOR EXAMPLE, "MOD" MAY MEAN MODIFY OR MODIFICATION; "INC" MAY MEAN INCLUDED OR INCLUDING AND "REINF" MAY MEAN EITHER REINFORCE OR REINFORCING.

BAR LENGTH ON ORIGINAL DRAWING EQUALS ONE INCH. ADJUST SCALE ACCORDINGLY

HDR Engineering, Inc.

REGISTERED PROFESSIONAL ENGINEER — CRAIG A. OLSON — NO. 39819 — EXP. 12-31-13 — CIVIL — STATE OF CALIFORNIA — 05-10-13

NO	DATE	REVISION	BY
	05-14-2013	ISSUED FOR BID	CAO

RUSSIAN RIVER COUNTY SANITATION DISTRICT

SCALE: NONE
DATE: 5/10/2013
DRAWN: RAA
REVIEWED:

BIOLOGICAL NUTRIENT REMOVAL
SYMBOL LEGEND AND ABBREVIATIONS

FILE NAME: 190077_G02.dwg
CONTRACT NUMBER: 70-713-7/91A
DRAWING NUMBER: G02
SHEET 2 OF 47

C:\pwworking\sac\d0407107\190077_G02

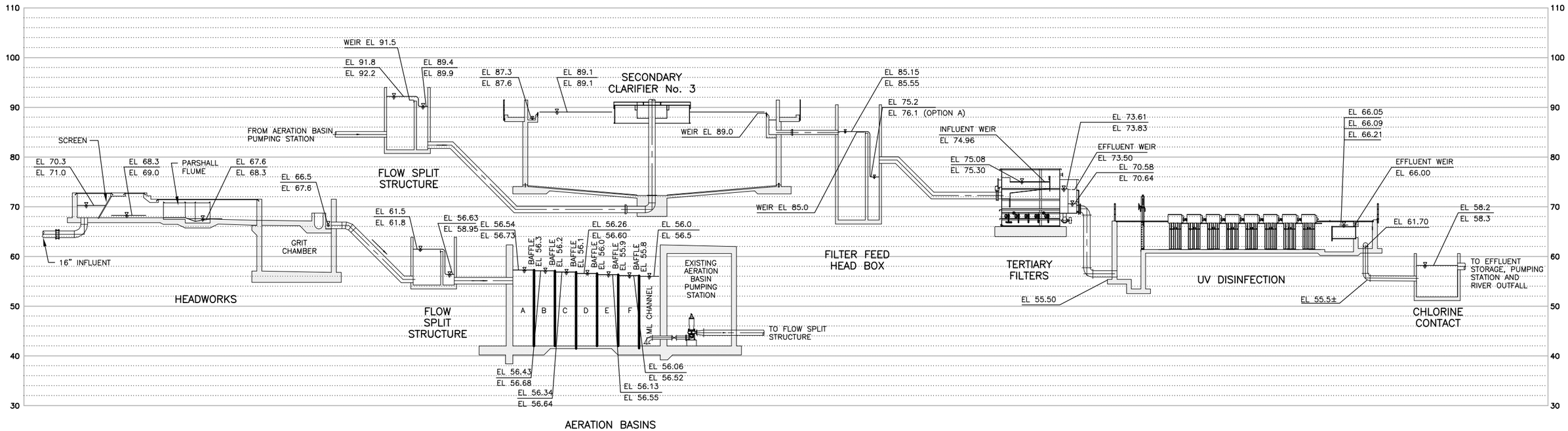

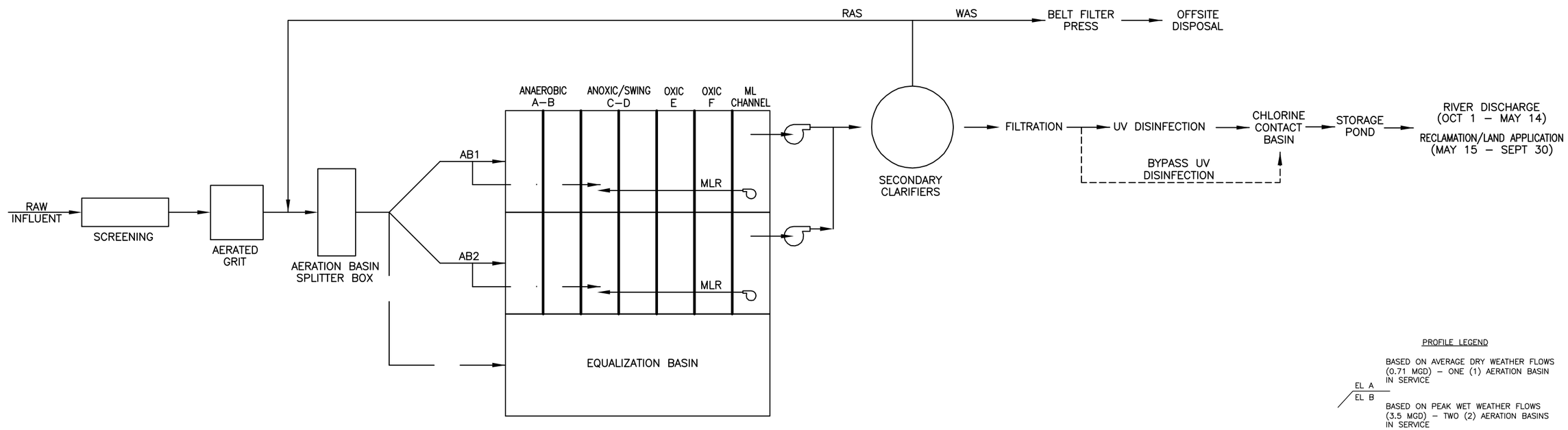

PROFILE LEGEND

EL A — BASED ON AVERAGE DRY WEATHER FLOWS (0.71 MGD) – ONE (1) AERATION BASIN IN SERVICE

EL B — BASED ON PEAK WET WEATHER FLOWS (3.5 MGD) – TWO (2) AERATION BASINS IN SERVICE

BAR LENGTH ON ORIGINAL DRAWING EQUALS ONE INCH. ADJUST SCALE ACCORDINGLY

HDR Engineering, Inc.

REGISTERED PROFESSIONAL ENGINEER CRAIG A. OLSON NO. 39818 EXP. 12-31-13 CIVIL STATE OF CALIFORNIA 05-14-13

NO	DATE	REVISION	BY
	05-14-2013	ISSUED FOR BID	CAO

RUSSIAN RIVER COUNTY SANITATION DISTRICT

SCALE: NONE
DATE: 5/8/2013
DRAWN: RAA
REVIEWED:

BIOLOGICAL NUTRIENT REMOVAL

HYDRAULIC PROFILE AND FLOW SCHEMATIC

FILE NAME: 190077_G03.dwg
CONTRACT NUMBER: 70-713-7#1A
DRAWING NUMBER: G03
SHEET 3 OF 47

C:\pwworking\sac\d0407107\190077_003

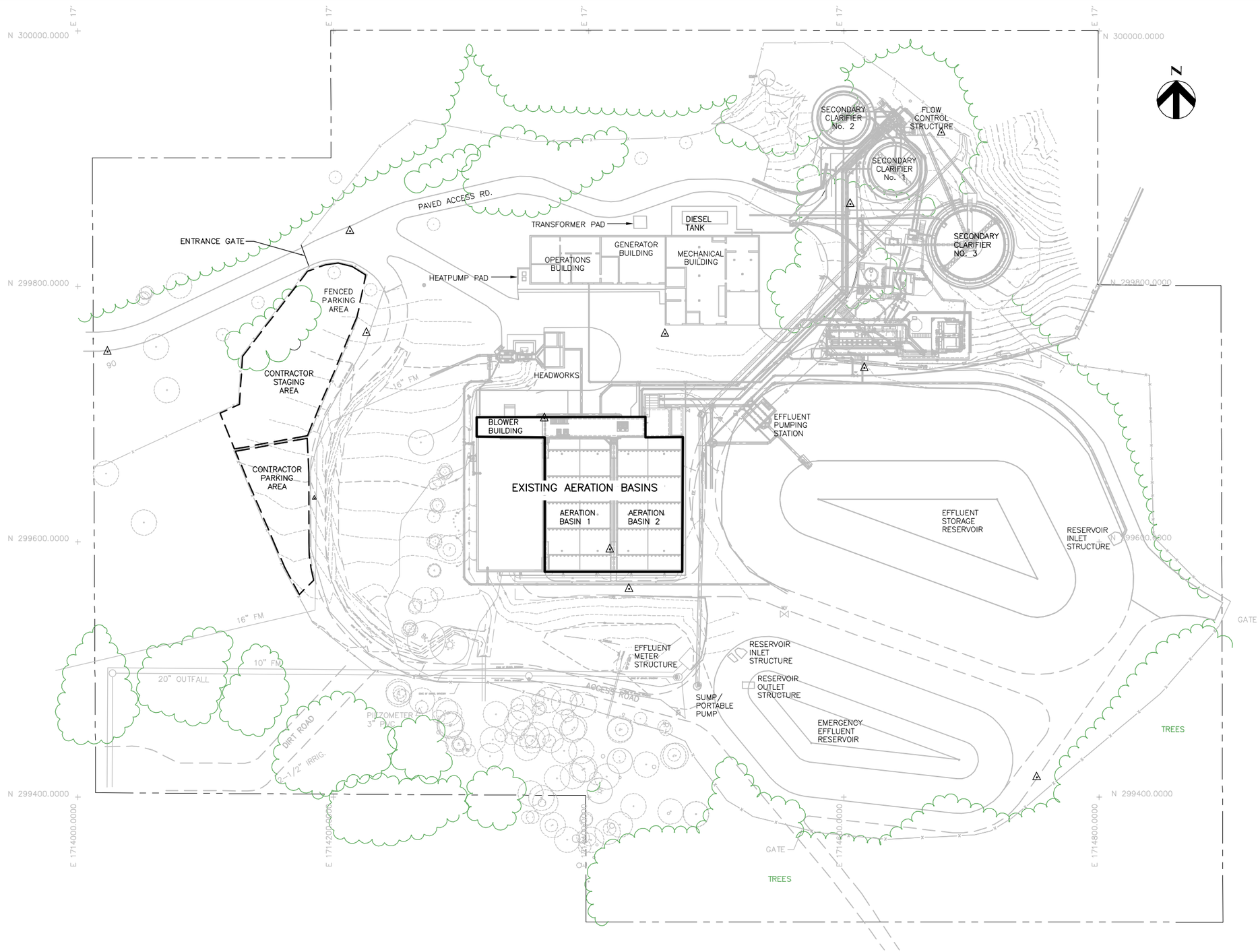

BAR LENGTH ON ORIGINAL DRAWING EQUALS ONE INCH. ADJUST SCALE ACCORDINGLY

HDR Engineering, Inc.

REGISTERED PROFESSIONAL ENGINEER CRAIG A. OLSON NO. 39819 EXP. 12-31-13 CIVIL STATE OF CALIFORNIA 05-10-13

NO	DATE	REVISION	BY
	05-14-2013	ISSUED FOR BID	CAO

RUSSIAN RIVER COUNTY SANITATION DISTRICT

SCALE: 1"=40'
DATE: 5/10/2013
DRAWN: RAA
REVIEWED:

BIOLOGICAL NUTRIENT REMOVAL
OVERALL SITE PLAN

FILE NAME: 190077_G04.dwg
CONTRACT NUMBER: 70-713-7/1A
DRAWING NUMBER: G04
SHEET 4 OF 47

C:\pwworking\sac\d0407107\190077_G04

STEP 1
(PCS-1)

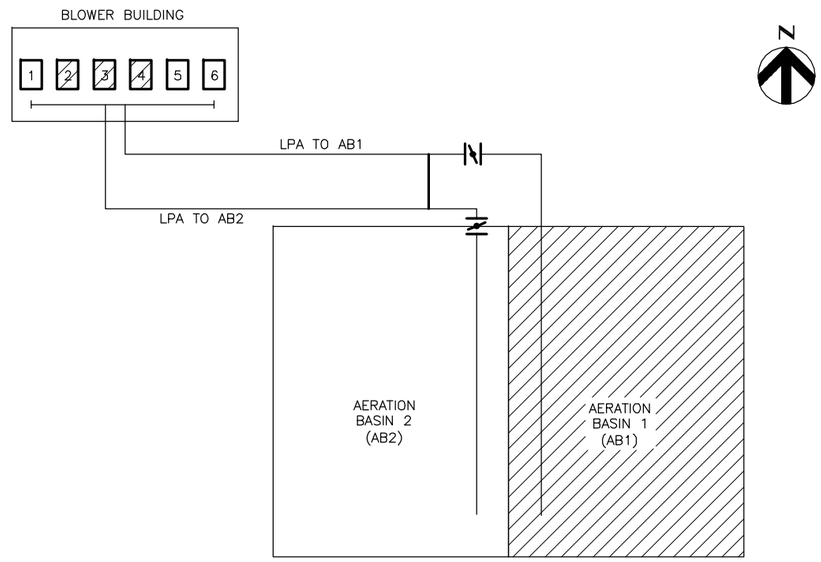

STEP 2
(PCS-1)

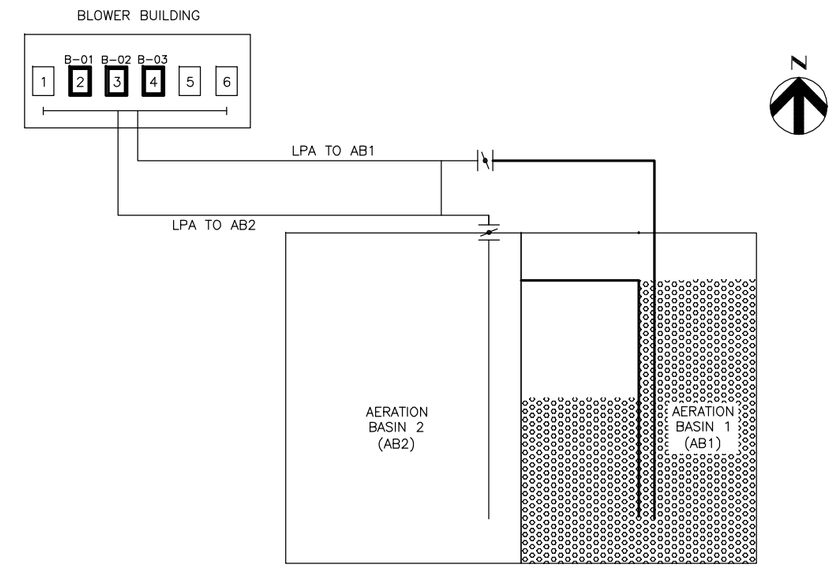

STEP 3
(PCS-2)

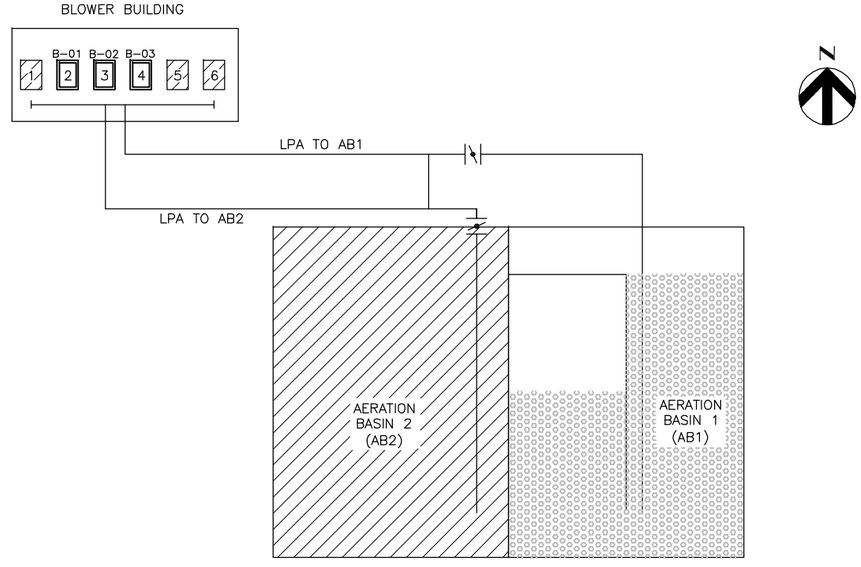

STEP 4
(PCS-2)

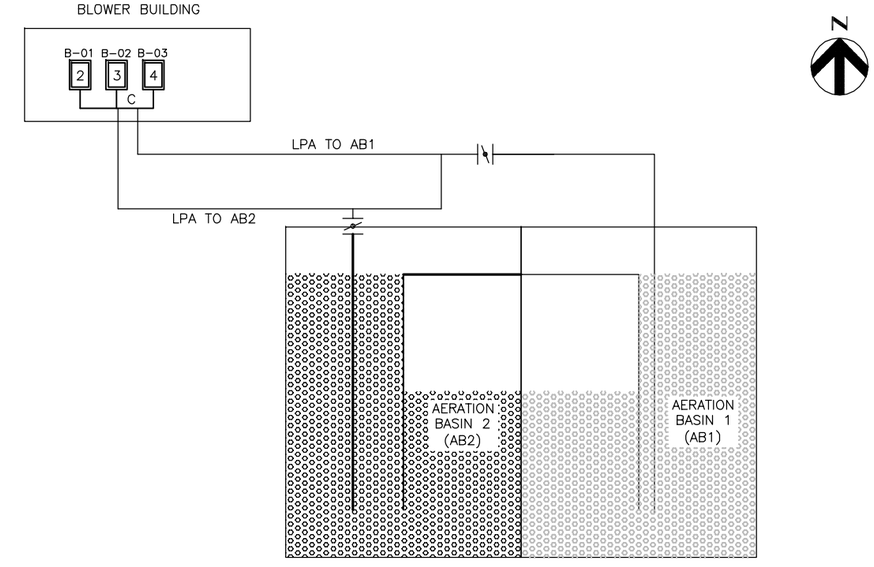

NOTE:

1. SEE SPECIFICATION SECTION 01100 (SUMMARY) FOR WORK SEQUENCE REQUIREMENTS.

BAR LENGTH ON ORIGINAL DRAWING EQUALS ONE INCH. ADJUST SCALE ACCORDINGLY

HDR Engineering, Inc.

REGISTERED PROFESSIONAL ENGINEER CRAIG A. OLSON NO. 39818 EXP. 12-31-13 CIVIL STATE OF CALIFORNIA 05-10-13

NO	DATE	REVISION	BY
	05-14-2013	ISSUED FOR BID	CAO

RUSSIAN RIVER COUNTY SANITATION DISTRICT

SCALE: NONE
DATE: 5/8/2013
DRAWN: RN
REVIEWED:

BIOLOGICAL NUTRIENT REMOVAL
CONSTRUCTION AND DEMOLITION SEQUENCING

FILE NAME: 190077_G05.dwg
CONTRACT NUMBER: 70-713-7#1A
DRAWING NUMBER: G05

C:\pwworking\sac\d0407107\190077_G05

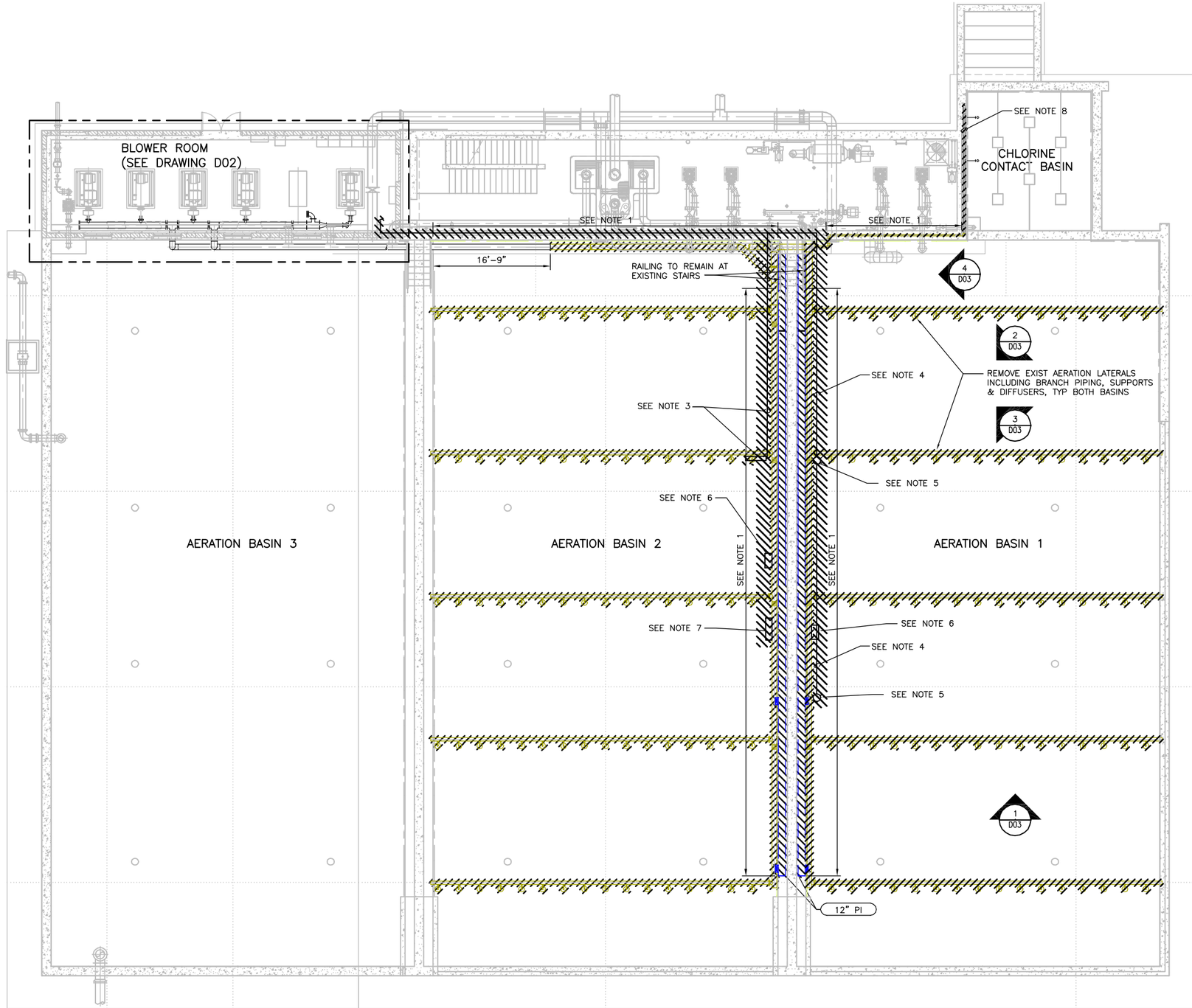

N

NOTES:

1. LIMITS OF REMOVAL EXISTING ALUMINUM RAILING.
2. SALVAGE ALL 1" STAINLESS STEEL LPA PIPING. DELIVER TO ON-SITE LOCATION DESIGNATED BY OWNER.
3. REMOVE CONDUIT, WIRE, 3 CONDUIT STANDS, ULTRASONIC SENSOR, ULTRASONIC SENSOR SUPPORT EACH SIDE OF WALKWAY. PROTECT ULTRASONIC SENSOR.
4. REMOVE CONDUIT, WIRE AND 14 CONDUIT STANDS.
5. REMOVE TWO LIGHT FIXTURES AND POLES.
6. REMOVE HOSE RACK EACH SIDE OF WALKWAY.
7. REMOVE LIFE RING, REMOUNT ON NEW RAILING.
8. REMOVE LPA PIPING.

BAR LENGTH ON ORIGINAL DRAWING EQUALS ONE INCH. ADJUST SCALE ACCORDINGLY

HDR Engineering, Inc.

REGISTERED PROFESSIONAL ENGINEER CRAIG A. OLSON NO. 39819 EXP. 12-31-13 CIVIL STATE OF CALIFORNIA 05-14-13

NO	DATE	REVISION	BY
	05-14-2013	ISSUED FOR BID	CAO

RUSSIAN RIVER COUNTY SANITATION DISTRICT

SCALE: 1/8"=1'-0"
DATE: 5/10/2013
DRAWN: RGS
REVIEWED:

BIOLOGICAL NUTRIENT REMOVAL
AERATION BASINS
DEMOLITION PLAN

FILE NAME: 190077_D01.dwg
CONTRACT NUMBER: 70-713-7#1A
DRAWING NUMBER: D01
SHEET 6 OF 47

C:\pwworking\sac\d0407107\190077_D01

NOTE:

1. SEE CONSTRUCTION SEQUENCING DRAWINGS (G05) FOR BLOWER DEMOLITION SEQUENCING

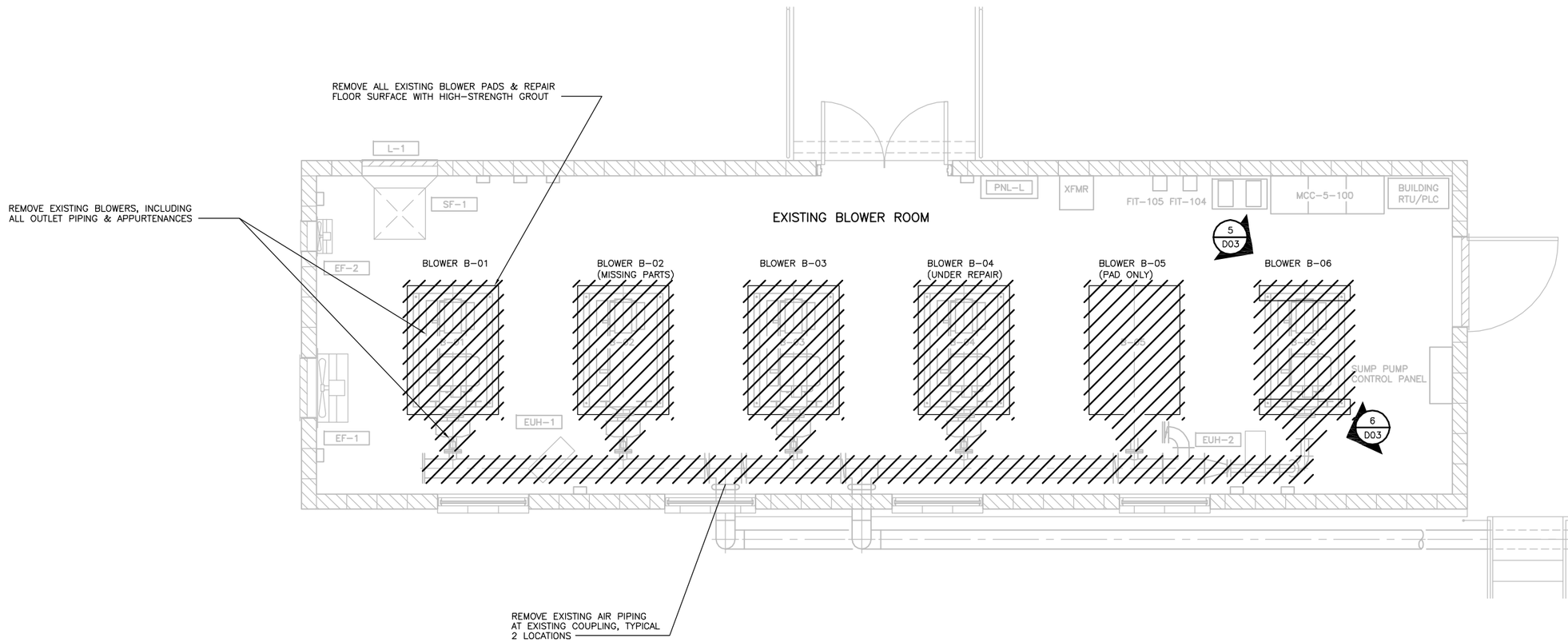

BLOWER BUILDING DEMOLITION PLAN

3/8" = 1'-0"

BAR LENGTH ON ORIGINAL DRAWING EQUALS ONE INCH. ADJUST SCALE ACCORDINGLY

HDR Engineering, Inc.

REGISTERED PROFESSIONAL ENGINEER CRAIG A. OLSON NO. 39818 EXP. 12-31-13 CIVIL STATE OF CALIFORNIA 05-14-13

NO	DATE	REVISION	BY
	05-14-2013	ISSUED FOR BID	CAO

RUSSIAN RIVER COUNTY SANITATION DISTRICT

SCALE: 3/8" = 1'-0" DATE: 5/8/2013
DRAWN: RAA
REVIEWED:

BIOLOGICAL NUTRIENT REMOVAL
BLOWER BUILDING DEMOLITION PLAN

FILE NAME: 190077_D02.dwg
CONTRACT NUMBER: 70-713-7/1A
DRAWING NUMBER: D02
SHEET 7 OF 47

C:\pwworking\sac\d0407107\190077_D02

PHOTO 1 D01
NTS

PHOTO 2 D01
NTS

PHOTO 3 D01
NTS

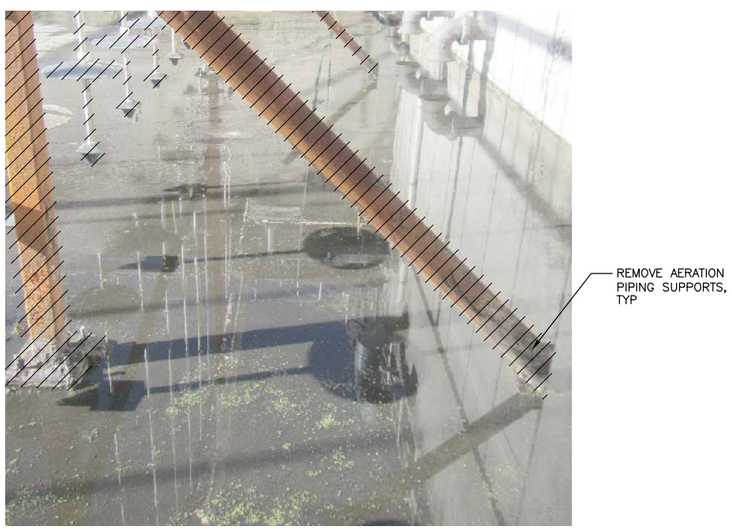

PHOTO 4 D01
NTS

PHOTO 5 D02
NTS

PHOTO 6 D02
NTS

NOTES:

1. SALVAGE ALL 1" STAINLESS STEEL LPA PIPING. DELIVER TO ON-SITE LOCATION DESIGNATED BY OWNER.
2. CUT-OFF EMBEDDED ANCHOR BOLTS AT CONCRETE SURFACE. DRILL OUT ANCHOR BOLTS 1 INCH BELOW SURFACE. PATCH HOLE WITH NON-SHRINK GROUT.

BAR LENGTH ON ORIGINAL DRAWING EQUALS ONE INCH. ADJUST SCALE ACCORDINGLY

HDR Engineering, Inc.

REGISTERED PROFESSIONAL ENGINEER CRAIG A. OLSON NO. 39819 EXP. 12-31-13 CIVIL STATE OF CALIFORNIA 05-10-13

NO	DATE	REVISION	BY
	05-14-2013	ISSUED FOR BID	CAO

RUSSIAN RIVER COUNTY SANITATION DISTRICT

SCALE: NTS
DATE: 5/10/2013
DRAWN: RGS
REVIEWED:

BIOLOGICAL NUTRIENT REMOVAL
AERATION BASINS AND BLOWER DEMOLITION PHOTOS

FILE NAME: 190077_D03.dwg
CONTRACT NUMBER: 70-713-7#1A
DRAWING NUMBER: D03
SHEET 8 OF 47

C:\pwworking\sac\d0407107\190077_D03

GENERAL STRUCTURAL NOTES (GSN)

GENERAL

G1 SCOPE
THE NOTES ON THIS SHEET AND THE STANDARD STRUCTURAL DETAILS ARE GENERAL AND APPLY TO THE ENTIRE PROJECT WHETHER SPECIFICALLY CALLED OUT OR NOT, EXCEPT WHERE THERE ARE SPECIFIC INDICATIONS TO THE CONTRARY ON STRUCTURAL DRAWINGS.

G2 APPLICABLE SPECIFICATIONS AND CODES

A. CALIFORNIA BUILDING CODE (CBC) 2010, WITH APPLICABLE EDITIONS OF THE CODE REFERENCED STANDARDS.
B. ACI 350
C. ASCE7-05
D. LOCAL JURISDICTION AMENDMENTS

G3 DESIGN CRITERIA

1. APPLIES TO ALL STRUCTURES (UNO)

A. DEAD LOAD:

1. ACTUAL TRIBUTARY STRUCTURE WEIGHT
2. SUPERIMPOSED DEAD LOAD: ACTUAL WT. OF ANY MECHANICAL EQUIPMENT.

B. LIVE LOAD:
1. ELEVATED FLOORS: 100 PSF
2. WALKWAYS, STAIRS, GRATING: 100 PSF
3. SLAB ON GRADE: 250 PSF
4. ROOF: 20 PSF (NOT REDUCIBLE)

C. SEISMIC:
1. ABOVE GRADE, NON WATER BEARING STRUCTURES:
a. OCCUPANCY CATEGORY: III
b. IMPORTANCE FACTOR: 1.25
c. SPECTRAL RESPONSE ACCELERATION, Ss = 1.987
d. SPECTRAL RESPONSE ACCELERATION, S1 = 0.930
e. SITE CLASS: D
f. SEISMIC DESIGN CATEGORY: D
g. SPECTRAL RESPONSE COEFFICIENT, SDs = 1.325
h. SPECTRAL RESPONSE COEFFICIENT, SD1 = 0.930

G5 SAFETY
SAFETY AND STRUCTURE STABILITY DURING CONSTRUCTION ARE THE SOLE RESPONSIBILITY OF THE CONTRACTOR. STRUCTURES HAVE BEEN DESIGNED TO RESIST THE DESIGN LIVE LOADS ONLY AS A COMPLETED STRUCTURE.

G6 OPENINGS
OPENINGS FOR PIPES, DUCTS, CONDUITS, ETC. ARE NOT ALL SHOWN ON THE STRUCTURAL DRAWINGS. COORDINATE AND PROVIDE OPENINGS AS REQUIRED TO ACCOMMODATE ALL WORK SHOWN OR SPECIFIED IN THE CONTRACT DOCUMENTS AND OTHERWISE REQUIRED FOR THE FURNISHING OF A FUNCTIONALLY COMPLETE PROJECT. REINFORCE AROUND OPENINGS PER STANDARD STRUCTURAL DETAILS UNLESS OTHERWISE SHOWN.

G7 SPECIAL INSPECTIONS
SPECIAL INSPECTIONS ARE REQUIRED IN ACCORDANCE WITH CHAPTER 1 AND CHAPTER 17 OF THE CBC. PAYMENT FOR THESE INSPECTIONS IS NOT THE RESPONSIBILITY OF THE CONTRACTOR. CONTRACTOR SHALL PROVIDE FOR FULL ACCESS TO THE WORK BY THE SPECIAL INSPECTOR AND SHALL PROVIDE FOR THESE INSPECTIONS IN CONSTRUCTION SCHEDULE IN ACCORDANCE WITH THE SPECIFICATIONS. CONTRACTOR SHALL NOTIFY OWNER OF SCHEDULED INSPECTION WORK, 14 DAYS IN ADVANCE. SEE S-01 FOR SPECIAL INSPECTION REQUIREMENTS.

G8 STANDARD DETAILS
THE STANDARD DETAILS DEPICT TYPICAL DETAILING TO BE USED ON THIS PROJECT. IF CONDITIONS ARE NOT EXPLICITLY SHOWN ON THE DRAWINGS THEY SHALL BE MADE SIMILAR TO THE STANDARD DETAILS. OBTAIN APPROVAL OF OWNER IN WRITING FOR SIMILAR CONDITIONS PRIOR TO CONSTRUCTION.

G9 THE CONTRACTOR SHALL FIELD VERIFY ALL DIMENSIONS AND ELEVATIONS OF EXISTING CONSTRUCTION AS REQUIRED TO COORDINATE NEW CONSTRUCTION. SUBMIT REQUIRED CHANGES FOR APPROVAL.

G10 CONTRACTOR TO SUBMIT FOR REVIEW ALL EQUIPMENT SIZES, OPERATING WEIGHTS, VIBRATION FORCES, SUPPORT LOCATIONS, ALONG WITH ANY FLOOR OPENINGS, NOTCHES, AND RECESSES REQUIRED BY SUCH EQUIPMENT. CONCRETE SUPPORT PADS AND/OR FRAMING REQUIRED TO SUPPORT SAID EQUIPMENT SHALL NOT BE FABRICATED AND PLACED UNTIL THE CONCRETE SUPPORT PADS AND/OR FRAMING IS APPROVED TO SUPPORT THE EQUIPMENT.

CONCRETE:

C1 DESIGN STRENGTHS:
f'c = 4,000 PSI
fy = 60,000 PSI

C2 CONCRETE COVER
UNLESS OTHERWISE NOTED, PROVIDE CONCRETE COVER FOR REINFORCING

SEE DRAWINGS FOR EXCEPTIONS (2 / S04)

C3 SEE SPECIFICATIONS FOR REINFORCING PLACEMENT REQUIREMENTS.

C4 REFER TO OTHER DISCIPLINE DRAWINGS PRIOR TO CONSTRUCTION FOR EMBEDDED ITEMS AND PENETRATIONS NOT SHOWN ON STRUCTURAL DRAWINGS. AS REQUIRED TO ACCOMMODATE ALL WORK SHOWN OR SPECIFIED IN THE CONTRACT DOCUMENTS AND OTHERWISE REQUIRED FOR THE FURNISHING OF A FUNCTIONALLY COMPLETE PROJECT. REINFORCE AROUND OPENINGS PER STANDARD STRUCTURAL DETAILS UNLESS OTHERWISE SHOWN.

C5 PROVIDE 3/4" CHAMFERS AT ALL EXPOSED EDGES AND 1/2" CHAMFERS AT JOINTS AS SHOWN. NOT ALL CHAMFERS MAY BE SHOWN ON DRAWINGS.

C6 FIELD ADJUST REINFORCING AT OPENINGS AND EMBEDDED ITEMS AS INDICATED.

C7 ANCHOR BOLTS NOT SPECIFIED SHALL BE DESIGNED AND CERTIFIED BY A REGISTERED PROFESSIONAL ENGINEER, RETAINED BY THE CONTRACTOR, IN ACCORDANCE WITH APPLICABLE PROJECT AND CODE REQUIREMENTS. SUBMIT AS A SHOP DRAWING FOR REVIEW AND APPROVAL BY THE OWNER. COORDINATE LOCATION, SIZE AND EMBEDMENT PRIOR TO CASTING CONCRETE.

C8 CONTRACTOR TO FIELD LOCATE EXISTING REINFORCING STEEL (RE-BAR) PRIOR TO DRILLING FOR DOWELS. UTILIZE HAND-HELD SUBSURFACE RE-BAR DETECTION DEVICE. ALL LOCATIONS OF EXISTING REINFORCING STEEL TO BE CLEARLY MARKED. DO NOT DISTURB EXISTING REINFORCING STEEL.

CONCRETE (CONT):

C9 CONTINUOUS RETROFIT WATERSTOP SHALL BE INSTALLED IN JOINTS SUBJECT TO STATIC WATER PRESSURE.

C10 EXCEPT WHERE SPECIFIC APPROVAL FROM THE STRUCTURAL ENGINEER IS OBTAINED IN WRITING NO WELDING OF REINFORCING BARS OR TORCHING TO BEND REINFORCING BARS SHALL BE ALLOWED.

C11 ALL CAST IN PLACE AND POST-INSTALLED ANCHORS INDICATED IN THE STRUCTURAL DOCUMENTS SHALL COMPLY WITH APPENDIX D OF ACI 318 AND CHAPTER 19 OF THE CBC. ALL EXPANSION AND ADHESIVE ANCHORS SHALL HAVE THE ICC REPORT SHOWING EQUIVALENT LOAD CAPACITY. SUBMIT AND INSTALL PER THE ICC EVALUATION REPORT.

C12 UNLESS NOTED OTHERWISE, ALL WALL REINFORCING BARS SHALL BE CONTINUOUS AROUND CORNERS AND THROUGH COLUMNS OR PILASTERS. REINFORCEMENT SHALL BE EXTENDED INTO CONNECTING WALLS, AND LAPPED ON THE OPPOSITE FACE OF THE CONNECTING WALLS, AS INDICATED ELSEWHERE ON THIS SHEET OR ON THE DRAWINGS. VERTICAL WALL BARS SHALL BE LAPPED WITH DOWELS FROM BASE SLABS AND EXTENDED INTO THE TOP FACE OF ROOF OR FLOOR SLABS AND LAPPED WITH TOP SLAB REINFORCEMENT. UNLESS OTHERWISE INDICATED, CONTRACTOR MAY SPLICE CONTINUOUS SLAB OR LONGITUDINAL BEAM BARS AT LOCATIONS OF IT'S CHOOSING, EXCEPT THAT TOP BAR SPLICES SHALL BE LOCATED AT MIDSPAN AND BOTTOM BAR SPLICES SHALL BE LOCATED AT SUPPORTS. ALL REINFORCEMENT BENDS AND LAPS, UNLESS OTHERWISE NOTED, SHALL SATISFY STANDARD DETAIL. (7 / S04)

STEEL

S1 DESIGN STRENGTHS:

WIDE FLANGE AND TEES:	Fy = 50 KSI
PIPES	Fy = 35 KSI
STAINLESS STEEL	Fy = 33 KSI
HSS SECTIONS	Fy = 46 KSI
ALL OTHER PLATES AND SHAPES:	Fy = 36 KSI

S2 DIMENSIONS:
TO CENTERLINES OF COLUMNS AND BEAMS, TOP SURFACES OF BEAMS AND TUBES AND BACKS OF CHANNELS AND ANGLES UNO.

S3 ELEVATIONS:
TOP OF STEEL REFERS TO TOP SURFACE OF MEMBER OR FLANGE UNO.

S4 WHEN FILLET WELD SIZE IS NOT INDICATED, PROVIDE MAXIMUM WELD SIZE BASED ON MATERIAL THICKNESS IN ACCORDANCE WITH AISC SPECIFICATIONS.

S5 CONFORM TO AISC 360, STEEL CONSTRUCTION MANUAL AND AISC 341, SEISMIC DESIGN MANUAL.

ALUMINUM:

A1 STRUCTURAL ALUMINUM YIELD STRENGTHS
STRUCTURAL ALUMINUM: Fy=35 KSI
STRUCTURAL ALUMINUM IS ALLOY 6061-T6 UNO

A2 DIMENSIONS:
TO CENTERLINES OF COLUMNS AND BEAMS, TOP SURFACES OF BEAMS AND TUBES AND BACKS OF CHANNELS AND ANGLES UNO.

A3 ELEVATIONS:
TOP OF ALUMINUM REFERS TO TOP SURFACE OR FLANGE OF MEMBER UNO.

A4 WHEN FILLET WELD SIZE IS NOT INDICATED, PROVIDE MAXIMUM WELD SIZE FOR THE MATERIAL THICKNESS IN ACCORDANCE WITH THE LATEST EDITION OF THE "ALUMINUM DESIGN MANUAL" BY THE ALUMINUM ASSOCIATION.

A5 ALUMINUM IN CONTACT WITH DISSIMILAR MATERIALS OR CONCRETE:
CONTACT SURFACES SHALL BE PROVIDED WITH GALVANIC SEPARATION PER SPECIFICATIONS.

DEFERRED APPROVAL NOTES:

CONTRACTOR TO FURNISH, DESIGN, DETAIL, AND INSTALL STRUCTURAL COMPONENTS LISTED BELOW. INSTALLATION AND DESIGN SHALL BE IN CONFORMANCE WITH THE 2010 CALIFORNIA BUILDING CODE, OSHA REGULATIONS, DRAWINGS, AND SPECIFICATIONS. CALCULATIONS FOR ALL MEMBERS AND CONNECTIONS (INCLUDING ANCHOR BOLTS ATTACHING STRUCTURAL COMPONENTS TO THEIR FOUNDATIONS) MUST BE PREPARED, STAMPED AND SIGNED BY A REGISTERED CIVIL OR STRUCTURAL ENGINEER LICENSED IN THE STATE OF CALIFORNIA AND MUST BE SUBMITTED WITH SHOP DRAWINGS. SHOP DRAWINGS MUST BE STAMPED AND SIGNED BY THE REGISTERED CIVIL OR STRUCTURAL ENGINEER THAT PREPARES THE CALCULATIONS.

1. FRP PANELS.
2. ALUMINUM RAILING.

SCHEDULE OF SPECIAL INSPECTION SERVICES

INSPECTION ITEM REQUIRED	FREQUENCY CONTINUOUS	FREQUENCY PERIODIC	CODE REFERENCE	REMARKS
CONCRETE & REINFORCING STEEL				
OBSERVE PLACEMENT OF REINFORCING STEEL PRIOR TO THE CLOSING OF THE FORMS AND ARRIVAL OF CONCRETE ONSITE.		●		
OBSERVE & VERIFY PLACEMENT OF EMBEDDED BOLTS PRIOR TO CONCRETE PLACEMENT.	●		CBC 1704.4	
VERIFY USE OF CORRECT CONCRETE MIX DESIGN AND REVIEW DELIVERY TICKETS		●		
SAMPLE FRESH CONCRETE AND MEASURE SLUMP, AIR CONTENT, AND TEMPERATURE DURING CONCRETE DELIVERY.	●		CBC 1704.4	
TAKE CONCRETE SPECIMENS FOR STRENGTH TESTS TO BE PERFORMED IN LAB. A MINIMUM OF FOUR (4) CYLINDERS SHALL BE MADE. TEST ONE AT SEVEN DAYS AND TWO AT 28-DAYS. THE 4TH CYLINDER SHALL BE TESTED AT 28 DAYS IF ONE OR BOTH OF THE 28-DAY CYLINDER RESULTS ARE BELOW REQUIRED STRENGTH.	●			
PERFORM CONCRETE STRENGTH TESTING IN LAB		●		
MAINTAIN A SPREADSHEET SHOWING DATE, SEQUENTIAL ORDER OF STRENGTH TEST RESULTS AND INDICATE RUNNING AVERAGE	●		ACI 318 PAR. 5.6.3.3	
OBSERVE FOR PROPER CONCRETE PLACEMENT	●		ACI 318 PAR. 5.9 & 5.10	
OBSERVE FOR PROPER CURING TEMPERATURE AND TECHNIQUES		●	ACI 318 PAR. 5.11, 5.12 & 5.13	
VERIFY THAT THE NECESSARY DESIGN STRENGTH HAS BEEN REACHED PRIOR TO THE REMOVAL OF FORMS.		●		
STRUCTURAL STEEL AND MOMENT FRAMES				
VERIFY FABRICATOR CERTIFICATION		●	CBC 1704.2	
HOLD PRE-CONSTRUCTION MEETINGS BETWEEN THE ENGINEER OF RECORD, THE FABRICATOR'S AND ERECTOR'S QUALITY CONTROL PERSONNEL, AND THE QUALITY ASSURANCE AGENCY TO PLAN AND DISCUSS THE PROJECT, FABRICATION PROCEDURES, ERECTION PROCEDURES, AND INSPECTION PROCEDURES.		●		FEMA-353 RECOMMENDATION.
INSPECT FABRICATION SHOP TO OBSERVE FABRICATION PROCEDURES		●		ONLY ONE INSPECTION IS REQUIRED UNLESS ON-SITE EVENTS INDICATE FURTHER INSPECTIONS ARE NECESSARY.
VERIFY CORRECT STRUCTURAL STEEL MATERIAL DELIVERED TO JOB SITE		●	CBC 1708.4	
VERIFY CORRECT FILLER MATERIAL USED IN WELDS		●	AISC LRFD A3.5	
VISUALLY INSPECT ALL WELDS		●	AWS D1.1 & AWS	
COLD-FORMED STEEL FRAMING				
OBSERVE & VERIFY USE OF CORRECT MEMBER SIZES, MATERIAL THICKNESS, FASTENERS, & WELDING		●		
SPECIAL INSPECTIONS FOR SEISMIC RESISTANCE				
PERFORM OBSERVAIONS, INSPECTIONS & TESTING FOR SEISMIC FORCE RESISTING SYSTEMS AS DESCRIBED IN THE ITEMS ABOVE.	●		CBC 1707	
OBSERVE & VERIFY ANCHORAGES FOR HVAC DUCTWORK, MECHANICAL UNITS, & PIPING SYSTEMS.		●	CBC 1705	
OBSERVE & VERIFY ANCHORAGES FOR ELECTRICAL EQUIPMENT USE FOR EMERGENCY OR STAND-BY SYSTEMS.		●		
POST INSTALLED ANCHORS				
ALL EPOXY AND EXPANSION ANCHOR	●			

TESTING AND INSPECTION FOR QUALITY ASSURANCE

THE OWNER SHALL EMPLOY QUALIFIED SPECIAL INSPECTORS TO PERFORM INSPECTIONS IN ACCORDANCE WITH THE BUILDING CODE. INSPECTORS SHALL PERFORM ALL DUTIES AND RESPONSIBILITIES AS REQUIRED BY THE BUILDING CODE.

THE FOLLOWING SCHEDULE CONTAINS A LIST OF SPECIAL INSPECTION ACTIVITIES RELATED TO THE QUALITY ASSURANCE PLAN REQUIRED BY THE BUILDING CODE (IBC CHAPTER 17) FOR THE FABRICATION, ERECTION AND CONSTRUCTION OF THE STRUCTURAL SYSTEMS AS GIVEN IN THE SPECIFICATIONS AND DRAWINGS OF THE PROJECT. ALL INSPECTORS SHALL BE QUALIFIED BY TRAINING AND EXPERIENCE FOR THE REQUIRED INSPECTIONS AND TEST PROCEDURES. REFER TO OSSC CHAPTER 17 "STRUCTURAL TESTS AND SPECIAL INSPECTIONS", FOR SPECIFIC TEST PROCECEDURES.

TESTING AND INSPECTION REPORTS SHALL BE PREPARED FOR EACH INSPECTION ITEM ON A DAILY BASIS WHENEVER WORK IS PERFORMED ON THAT ITEM. REPORTS SHALL BE DISTRIBUTED TO OWNER, CONTRACTOR, BUILDING OFFICIAL (IF REQUESTED), AND ENGINEER FOR THIER REVIEW,COMMENT, AND ACTION, AS NEEDED.

BAR LENGTH ON ORIGINAL DRAWING EQUALS ONE INCH. ADJUST SCALE ACCORDINGLY

HDR Engineering, Inc.

REGISTERED PROFESSIONAL ENGINEER ASIM AVANGAR NO. 54655 EXP. 12/31/13 CIVIL STATE OF CALIFORNIA 5/10/13

NO	DATE	REVISION	BY
	05-14-2013	ISSUED FOR BID	CAO

RUSSIAN RIVER COUNTY SANITATION DISTRICT

SCALE: AS NOTED | DATE: 5/8/2013
DRAWN: R. PRASAD
REVIEWED:

BIOLOGICAL NUTRIENT REMOVAL
GENERAL STRUCTURAL NOTES AND INSPECTION NOTES

FILE NAME: 190077_S01.dwg
CONTRACT NUMBER: 70-713-7#1A
DRAWING NUMBER: S01
SHEET 9 OF 47

C:\pwworking\sac\d0407107\190077_S01

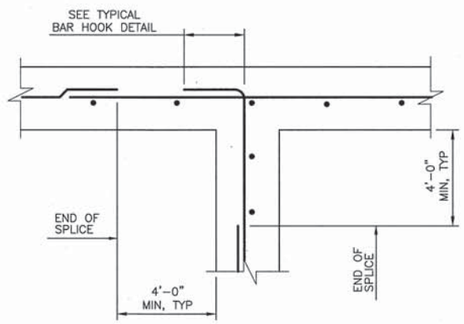

SINGLE-LAYER INTERSECTION

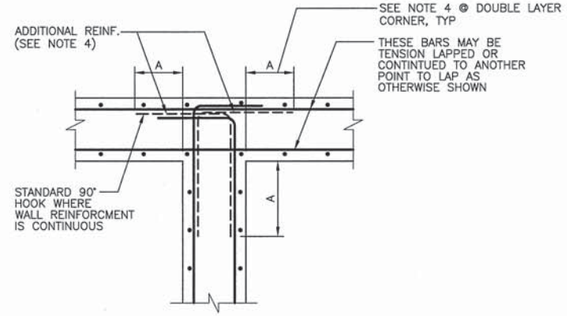

DOUBLE-LAYER INTERSECTION

NOTES:

1. SEE INDIVIDUAL STRUCTURE DRAWINGS FOR EXTRA HORIZONTAL REBARS AT CORNERS AND WALL INTERSECTIONS.
2. SEE SCHEDULE FOR BAR DEVELOPMENT AND LAP LENGTHS.
3. LONG STRAIGHT BARS WITH LAP SPLICES BENT BARS AT ENDS MAY BE SUBSTITUTED FOR LONG BARS WITH END HOOKS.
4. ADDITIONAL CORNER BARS REQUIRED ONLY AS SPECIFIED ON DESIGN DRAWINGS, AND TO BE STAGGERED. FULL WALL HEIGHT, WITH HORIZONTAL WALL REINFORCING. A=1/5 THE CLEAR SPAN DISTANCE MEASURED HORIZONTALLY BETWEEN WALLS, BUT IN NO CASE LESS THAN THE REQUIRED LENGTH OF LAPPED SPLICES FOR TOP BARS (UNLESS AT A PENETRATION).

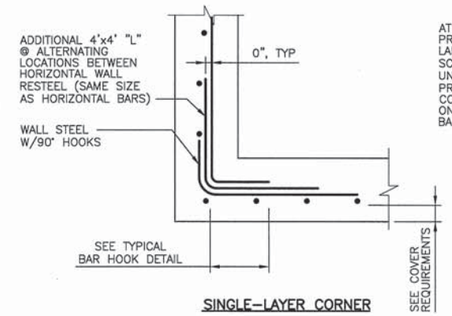

SINGLE-LAYER CORNER

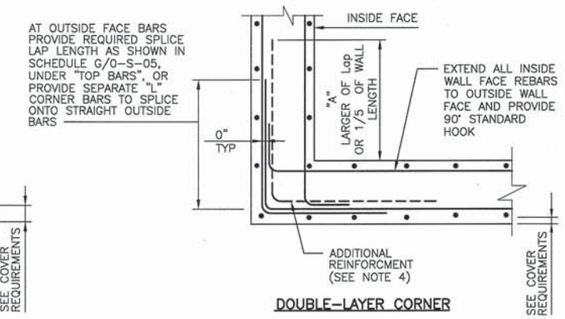

DOUBLE-LAYER CORNER

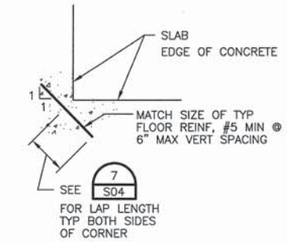

ADDITIONAL REINFORCEMENT AT RECTANGULAR SLAB CORNER

HORIZONTAL REINFORCING AT WALL CORNER

NTS 1 –

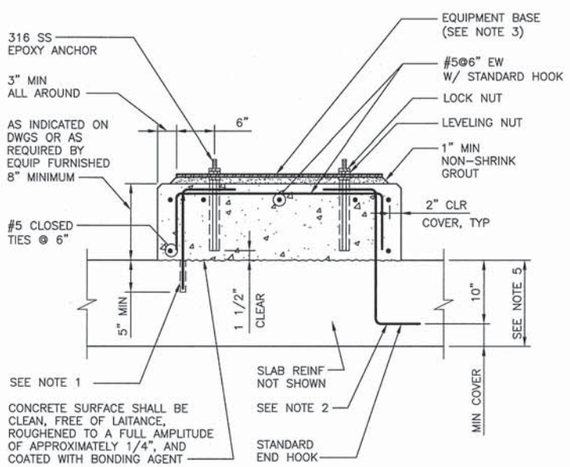

NOTES:

1. FOR NEW EQUIPMENT PADS ON EXISTING SLABS, DRILL INTO EXISTING SLAB AT 6" CENTERS AROUND PERIMETER OF EQUIPMENT PADS AND SET #5 HOOKED DOWELS IN EPOXY GROUT.
2. FOR EQUIPMENT PADS ON NEW SLABS, PROVIDE #5 DOWELS AT 6" CENTERS AROUND PERIMETER OF EQUIPMENT BASE.
3. EQUIPMENT DIMENSIONS SHALL BE AS INDICATED ON THE DRAWINGS OR AS DETERMINED BY THE EQUIPMENT MANUFACTURER AND APPROVED BY THE OWNER.
4. EQUIPMENT BASES SHALL BE INSTALLED LEVEL. TOLERANCE IS 1/16".
5. WHERE CONCRETE SLAB THICKNESS WILL NOT PROVIDE MINIMUM COVER AS SPECIFIED ON DRAWINGS, PROVIDE EXTRA THICKNESS OF CONCRETE.

EQUIPMENT PAD DETAIL

NTS 4 –

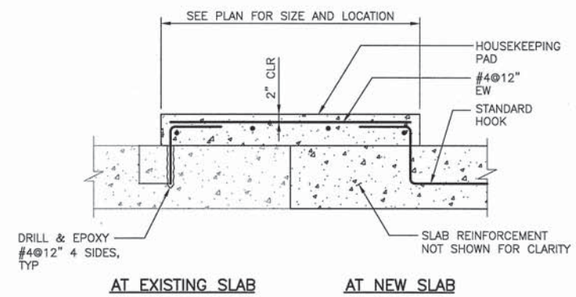

AT EXISTING SLAB AT NEW SLAB

TYPICAL HOUSEKEEPING PAD DETAIL

NTS 2 –

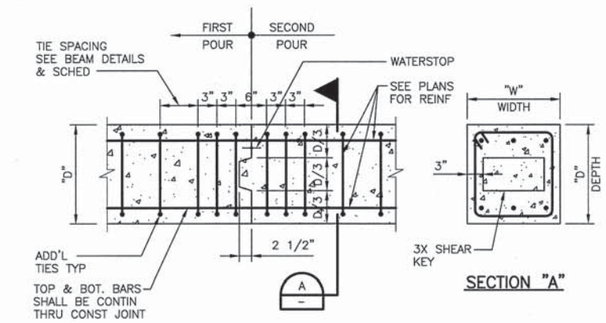

SECTION "A"

TYPICAL CONCRETE BEAM CONSTRUCTION JOINT DETAIL

NTS 3 –

NOT USED

NTS 5 –

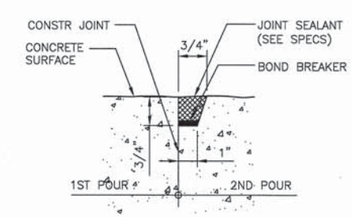

NOTES:

1. DO NOT APPLY BOND BREAKER TO SEALANT GROOVE. BOND BREAKER SHALL BE APPLIED NEATLY TO THE BOTTOM OF GROOVE ONLY.
2. BOND BREAKER TAPE SHALL NOT BE USED EXCEPT FOR SLIP DOWEL JOINTS.
3. ALL JOINTS OF HYDRAULIC STRUCTURES RETAINING WATER SHALL HAVE A SEALANT GROOVE.

TYPICAL SEALANT GROOVE DETAIL

NTS 6 –

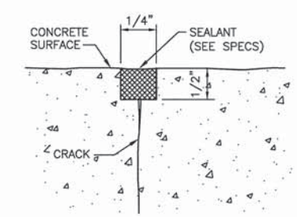

NOTES:

1. ENLARGE CRACK AT CONCRETE SURFACE AS SHOWN AND APPLY JOINT SEALANT.
2. ALL CRACKS IN WATER RETAINING STRUCTURE MUST BE REPAIRED PRIOR TO FILLING.
3. WIDEN CRACK SHALL BE 1/8" MINIMUM EACH SIDE OF THE CRACK CENTERLINE.

CONCRETE CRACK REPAIR DETAIL

NTS 7 –

BAR LENGTH ON ORIGINAL DRAWING EQUALS ONE INCH. ADJUST SCALE ACCORDINGLY

HDR Engineering, Inc.

REGISTERED PROFESSIONAL ENGINEER RONALD RAVAMANI NO. 54655 EXP. 12/31/13 CIVIL STATE OF CALIFORNIA 5/10/13

NO	DATE	REVISION	BY
	05-14-2013	ISSUED FOR BID	CAO

RUSSIAN RIVER COUNTY SANITATION DISTRICT

SCALE: AS NOTED | DATE: 5/8/2013
DRAWN: R. PRASAD
REVIEWED:

BIOLOGICAL NUTRIENT REMOVAL
STANDARD CONCRETE DETAILS 1

FILE NAME: 190077_S02.dwg
CONTRACT NUMBER: 70-713-7#1A
DRAWING NUMBER: S02
SHEET 10 OF 47

C:\pwworking\sac\d0407107\190077_S02

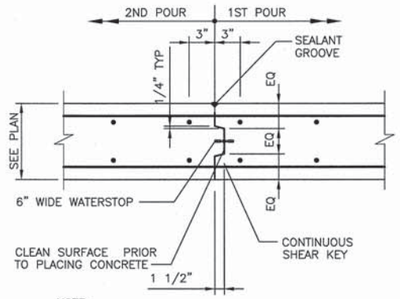

NOTE:

CONTRACTOR TO SUBMIT PROPOSED CONSTRUCTION JOINT LAYOUT (IF DIFFERENT FROM SHOWN ON FLOOR PLAN), FOR REVIEW AND APPROVAL OF THE ENGINEER OF RECORD PRIOR TO PLACING CONCRETE.

TYPICAL WALL VERT CONST JOINT

NTS — 1 / –

NOT USED

NTS — 2 / –

NOT USED

NTS — 3 / –

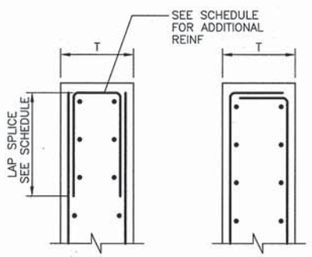

T	ADDITIONAL REINFORCEMENT
T ≤ 1'–6"	#4 U TO MATCH SPACING OF VERTICALS
T > 1'–6"	#5 U TO MATCH SPACING OF VERTICALS

OPTION–1 OPTION–2

NOTES:

1. FOR TYPICAL REINFORCMENT, SEE PLAN DRAWINGS.
2. TERMINATE TYPICAL REIFORCEMENT WITH END HOOK (OPTION–2) OR ADDITIONAL U BARS (OPTION–1).
3. THIS DETAIL TO BE USED ONLY WHEN A SPECIAL DETAIL IS NOT PROVIDED ON PLAN DRAWINGS.

TYPICAL TOP OR END OF WALL REINFORCEMENT W/ "T" ≥ 1'–0"

NTS — 4 / –

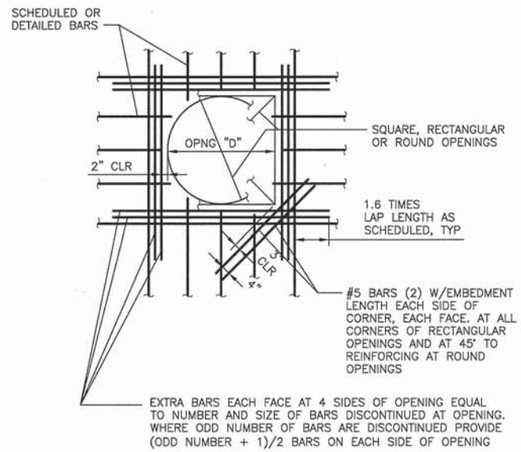

NOTES:

1. THIS DETAIL IS APPLICABLE ONLY TO WALLS OR SLABS WITH THICKNESS 36" OR LESS. FOR CONDITIONS AT THICKER CONCRETE, SEE PLANS AND DETAILS.
2. UNLESS SHOWN OTHERWISE ON DRAWINGS, PROVIDE EXTRA BARS AROUND OPENINGS IN WALLS, FLOORS, AND ROOFS AS SHOWN.
3. EVERY BAR DISCONTINUED AT AN OPENING SHALL BE REPLACED IN KIND BY ONE EXTRA BAR PLACED AT ONE SIDE OF THE OPENING AS SHOWN ABOVE.
4. FOR OPENINGS 8" OR LESS IN SLABS AND WALLS, NO EXTRA BARS ARE REQUIRED UNLESS OTHERWISE NOTED. SCHEDULED REBARS SHALL BE RESPACED (NOT CUT) TO ALLOW FOR UNIMPAIRED OPENINGS.

REINFORCING AT RECTANGULAR/CIRCULAR OPENINGS

NTS — 5 / –

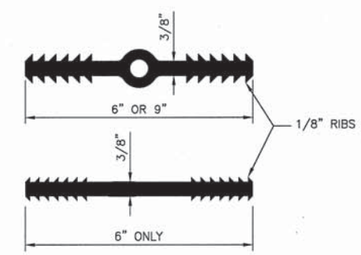

NOTES:

1. – USE 9" AT EXPANSION JOINTS ONLY.
   – USE 6" BULB AT CONTRACTION JOINTS.
   – USE 6" NON–BULB AT CONTRACTION JOINTS. (WITH REINFORCING CONTINUOUS THRU JOINT)
2. WATERSTOP TO BE PVC UNLESS NOTED OTHERWISE.

WATERSTOP

NTS — 6 / –

BAR LENGTH ON ORIGINAL DRAWING EQUALS ONE INCH. ADJUST SCALE ACCORDINGLY

HDR Engineering, Inc.

REGISTERED PROFESSIONAL ENGINEER — DAVID TAVANGAR — NO. 54655 EXP. 12/31/13 — CIVIL — STATE OF CALIFORNIA — 5/10/13

NO	DATE	REVISION	BY
	05-14-2013	ISSUED FOR BID	CAO

RUSSIAN RIVER COUNTY SANITATION DISTRICT

SCALE: AS NOTED — DATE: 5/8/2013
DRAWN: R. PRASAD
REVIEWED:

BIOLOGICAL NUTRIENT REMOVAL
STANDARD CONCRETE DETAILS 2

FILE NAME: 190077_S03.dwg
CONTRACT NUMBER: 70-713-7#1A
DRAWING NUMBER: S03
SHEET 11 OF 47

C:\pwworking\sac\d0407107\190077_S03

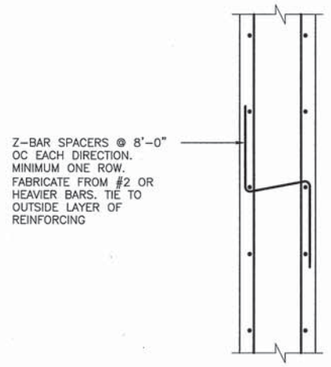

SPACER FOR WALL REINFORCEMENT (1)

NTS

LOCATION	* MINIMUM COVER
UNFORMED SURFACES ADJACENT TO EARTH	3"
FORMED OR TOP SURFACES EXPOSED TO WEATHER OR SATURATED AIR, SUBMERGED OR IN CONTACT WITH EARTH:	2"
OTHER LOCATIONS:	
BARS IN BEAMS OR GIRDERS, INCLUDING STIRRUPS AND COLUMN SPIRALS OR TIES	1 1/2"
SLABS, WALLS AND JOINTS	
#9 AND LARGER	BAR DIA + 1/4"
#8 AND SMALLER	1 1/2"

* COVER FOR REINFORCING STEEL SHALL NOT BE LESS THAN THE MINIMUM GIVEN ABOVE (NO MINUS TOLERANCE) , AND SHALL NOT EXCEED THE MINIMUM BY MORE THAN 1/4 INCH WHERE THE CONCRETE THICKNESS IS 24" OR LESS, OR MORE THAN 1/2 INCH WHERE THE CONCRETE THICKNESS IS MORE THAN 24 INCHES.

REINFORCEMENT CONCRETE COVER (2)

NTS

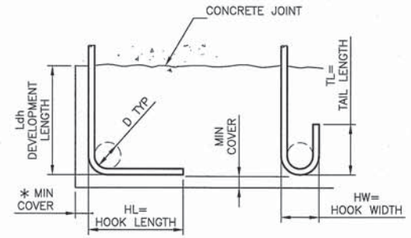

90° STD HOOK 180° STD HOOK

BAR SIZE GRADE 60	HL	HW	TL	D	f'c=4.0 OR 4.5 KSI Ldh *
#3	6"	3"	3"	2 1/4"	6"
#4	8"	4"	4 1/2"	3"	7"
#5	10"	5"	5"	3 3/4"	9"
#6	1'-0"	6"	6"	4 1/2"	10"
#7	1'-2"	7"	7"	5 1/4"	12"
#8	1'-4"	8"	8"	6"	14"
#9	1'-7"	11 3/4"	10 1/2"	9 1/2"	15"
#10	1'-10"	1'-1 1/4"	11 1/2"	10 3/4"	17"
#11	2'-0"	1'-2 3/4"	1'-1"	12"	19"

* COMPLYING WITH MINIMUM COVER REQUIREMENTS OF ACI 318, 12.5.3. OTHERWISE Ldh MUST BE RE-CALCULATED.

REINFORCING HOOK SCHEDULE (3)

NTS

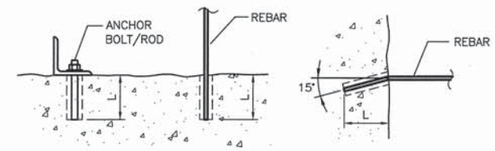

VERTICAL APPLICATION HORIZONTAL APPLICATION

ADHESIVE ANCHOR SCHEDULE			
REINFORCING BARS		ANCHOR BOLTS/RODS	
BAR SIZE	EMBED LENGTH (L)	DIA (IN)	EMBED LENGTH (L)
#3	4"	3/8"	5"
#4	5"	1/2"	6"
#5	6"	5/8"	7"
#6	7"	3/4"	8"
#7	8"	7/8"	9"
#8	9"	1"	10"
#9	10"		
#10	12"		

NOTES:

1. EPOXY TYPE IS SUBJECT TO APPROVAL OF THE ENGINEER OF RECORD.
2. EMBEDMENT LENGTHS SHOWN ARE MINIMUM. PROVIDE MANUFACTURER'S RECOMMENDATIONS FOR INSTALLATION.

ADHESIVE ANCHOR DETAILS & SCHEDULE (4)

NTS

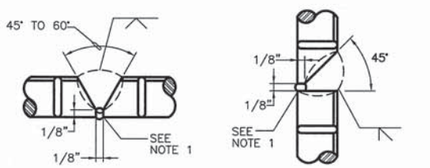

HORIZONTAL POSITION – A VERTICAL POSITION – B

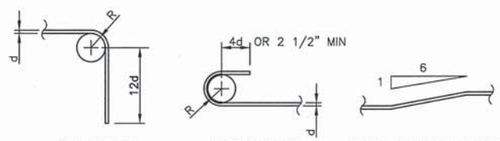

90° BEND 180° BEND MAX OFFSET BEND

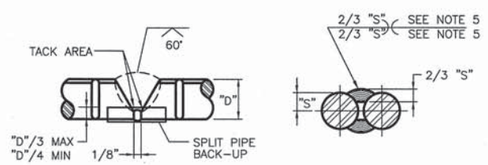

HORIZONTAL AND VERTICAL POSITION – C HORIZONTAL AND VERTICAL POSITION – D

NOTES:

1. CHIP, GRIND, OR GOUGE TO SOUND METAL BEFORE WELDING OTHER SIDE.
2. USE DETAIL A & B FOR #9 & LARGER BARS. USE DETAIL C FOR #8 & SMALLER BARS. USE DETAIL D FOR #6 & SMALLER BARS.
3. E 90 ELECTRODE FOR GRADE 60.
4. SEE AWS D1.4 FOR WELDING PROCESS, PREHEAT REQUIREMENTS, AND OTHER DETAILS. SUBMIT WELDING PROCEDURE PER AWS.
5. 1 1/2" FOR #3 AND #4 BARS; 2" FOR #5 BARS; AND 2 1/2" FOR #6 BARS.
6. SEE NOTE C9 ON S01

WELDED SPLICE OF REINFORCING BARS (5)

NTS

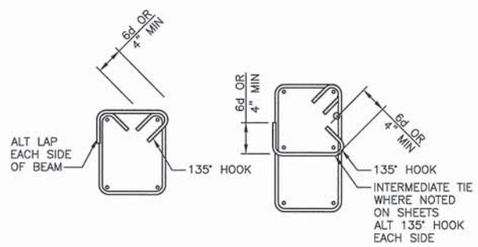

TYP. STIRRUP TYP. COLUMN TIE OR CLOSED STIRRUP

BAR SIZE	R
#3 TIES & STIRRUPS	2d
#3–#8	3d
#9–#11	4d
#14–#18	5d

TYPICAL STIRRUPS & TIES (6)

NTS

BAR SIZE	f'c = 5.0 ksi		fy = 60.0 ksi	
	LAP LENGTH (IN)		EMBEDMENT LENGTH (IN)	
	TOP	OTHER	TOP	OTHER
#3	21	16	16	12
#4	28	22	22	16
#5	35	27	27	21
#6	43	33	33	25
#7	62	48	48	37
#8	71	55	55	42
#9	80	62	62	47
#10	91	70	70	53
#11	101	77	77	59

NOTES:

1. LAP LENGTHS SHOWN ARE FOR CLASS "B" TENSION SPLICES.
2. LAP LENGTHS AND EMBEDMENTS SHOWN ARE FOR BARS SPACED LATERALLY @ > FIVE TIMES THE BAR DIAMETER AND FOR MINIMUM COVER IN ACCORDANCE WITH ACI 318-08.
3. IF SPACING IS < 5 TIMES BAR DIAMETER, INCREASE LAP LENGTH AND EMBEDMENT SHOWN BY 25%.
4. TOP REINFORCING IS HORIZONTAL STEEL SO PLACED THAT MORE THAN 12" OF FRESH CONCRETE IS CAST IN THE MEMBER BELOW THE REINFORCING.

BAR SIZE	f'c = 4.0 ksi		fy = 60.0 ksi	
	LAP LENGTH (IN)		EMBEDMENT LENGTH (IN)	
	TOP	OTHER	TOP	OTHER
#3	24	18	18	15
#4	33	24	24	19
#5	40	31	31	24
#6	48	38	37	29
#7	70	55	54	42
#8	81	62	62	48
#9	91	70	70	54
#10	103	79	79	61
#11	113	87	87	67

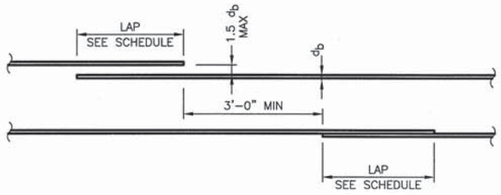

REINFORCING LAP SCHEDULE (7)

NTS

BAR LENGTH ON ORIGINAL DRAWING EQUALS ONE INCH. ADJUST SCALE ACCORDINGLY

HDR Engineering, Inc.

REGISTERED PROFESSIONAL ENGINEER DAVID TAVANDAR NO. 54655 EXP. 12/31/13 CIVIL STATE OF CALIFORNIA 5/10/13

NO	DATE	REVISION	BY
	05-14-2013	ISSUED FOR BID	CAO

RUSSIAN RIVER COUNTY SANITATION DISTRICT

SCALE: AS NOTED DATE: 5/8/2013
DRAWN: R. PRASAD
REVIEWED:

BIOLOGICAL NUTRIENT REMOVAL
STANDARD REINFORCEMENT DETAILS

FILE NAME: 190077_S04.dwg
CONTRACT NUMBER: 70-713-7#1A
DRAWING NUMBER: S04
SHEET 12 OF 47

C:\pwworking\sac\d0407107\190077_S04

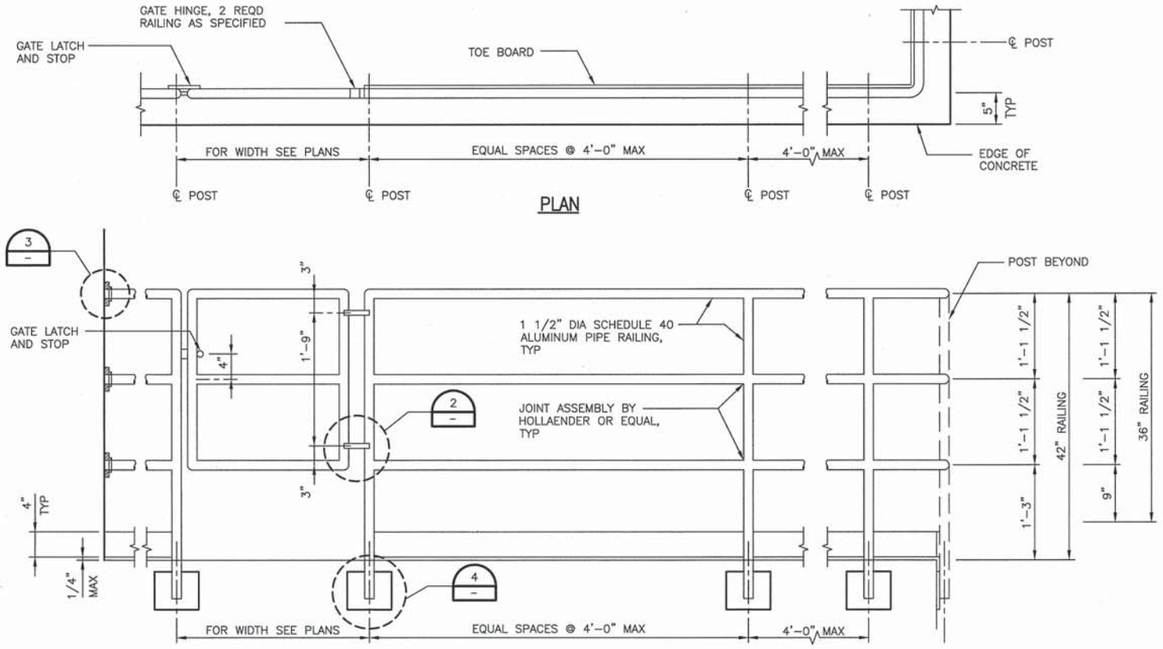

PLAN

ELEVATION

NOTES:

1. FASTEN RAILING TO WALL BRACKET PER MANUFACTURERS RECOMMENDATIONS.
2. WALL FLANGE TO BE MOUNTED TO WALL WITH 2-3/8" DIAMETER STAINLESS STEEL X 4" EMBED HILTI HIT HY-150 EPOXY ANCHOR (ICB, ER5193) OR EQUAL SPECIAL INSPECTION REQUIRED.
3. ENTIRE ASSEMBLY TO BE ALUMINUM (EXCEPT BOLTS).
4. CONTRACTOR MAY SUBSTITUTE GATE FOR REMOVABLE RAILING IF APPROVED BY OWNER.

THREE-RAIL PLATFORM RAILING (1/-)

NTS

GENERAL NOTES:

1. VERTICAL POST SHALL BE 1 1/2" NOMINAL DIAMETER SCHEDULE 40 PIPE.
2. FASTENERS SHALL BE 1/2" DIAMETER STAINLESS STEEL ADHESIVE ANCHORS WITH 4" MININUM EMBEDMENT. PROVIDE STAINLESS STEEL NUTS AND WASHER.
3. SEE DEFERRED APPROVALS LIST ON S01.

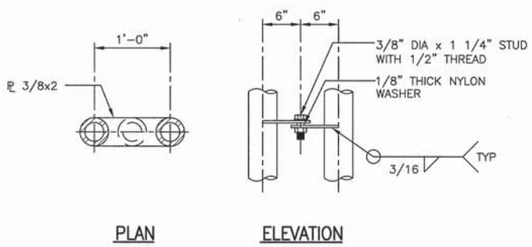

PLAN

ELEVATION

GATE HINGE DETAIL (2/-)

NTS

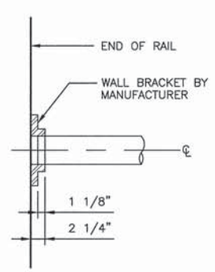

DETAIL (3/-)

NTS

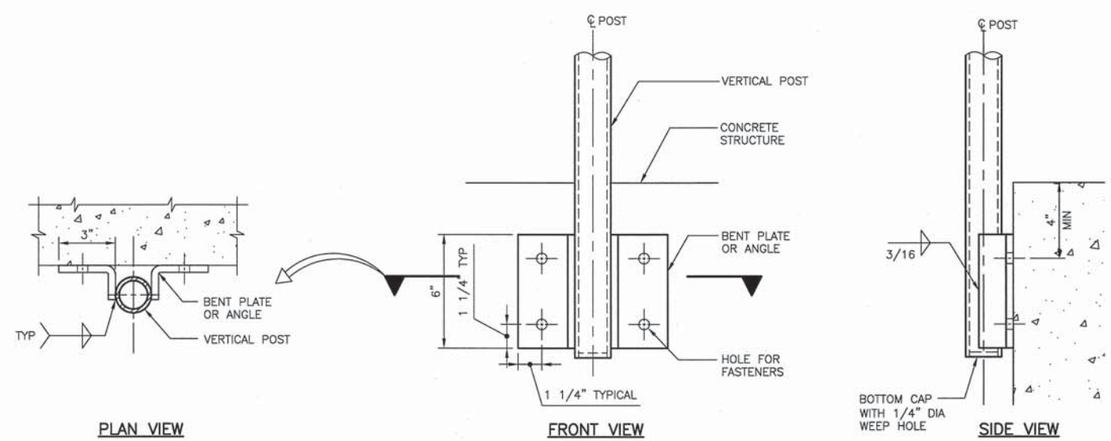

PLAN VIEW

FRONT VIEW

SIDE VIEW

RAILING POST ANCHORAGE DETAIL @ CONCRETE (4/-)

NTS

BAR LENGTH ON ORIGINAL DRAWING EQUALS ONE INCH. ADJUST SCALE ACCORDINGLY

HDR Engineering, Inc.

REGISTERED PROFESSIONAL ENGINEER
OMID TAHANGAR
NO. 54655
EXP. 12/31/13
CIVIL
STATE OF CALIFORNIA
5/10/13

NO	DATE	REVISION	BY
	05-14-2013	ISSUED FOR BID	CAO

RUSSIAN RIVER COUNTY SANITATION DISTRICT

SCALE: AS NOTED
DATE: 5/8/2013
DRAWN: R. PRASAD
REVIEWED:

BIOLOGICAL NUTRIENT REMOVAL
TYPICAL RAILING DETAILS

FILE NAME: 190077_S05.dwg
CONTRACT NUMBER: 70-713-7#1A
DRAWING NUMBER: S05
SHEET 13 OF 47

C:\pwworking\sac\d0407107\190077_S05

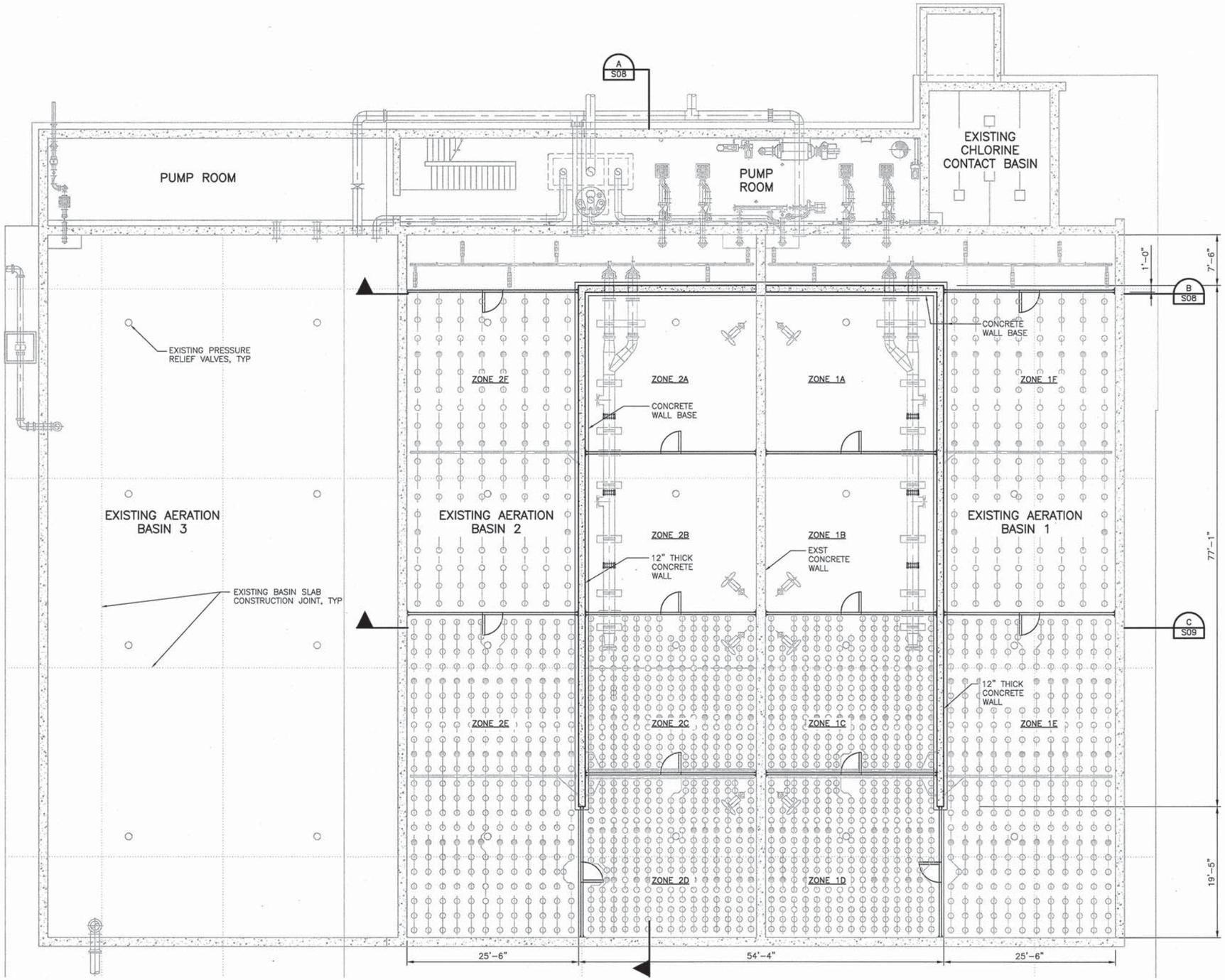

FLOOR PLAN – LOWER LEVEL

1/8" = 1'-0"

NOTE:

1. SEE MECHANICAL DRAWINGS FOR PIPING AND PIPE SUPPORTS.

BAR LENGTH ON ORIGINAL DRAWING EQUALS ONE INCH. ADJUST SCALE ACCORDINGLY

HDR Engineering, Inc.

REGISTERED PROFESSIONAL ENGINEER DAVID T. AVANCEÑA No. 54655 EXP. 12/31/13 CIVIL STATE OF CALIFORNIA 5/10/13

NO	DATE	REVISION	BY
	05-14-2013	ISSUED FOR BID	CAO

RUSSIAN RIVER COUNTY SANITATION DISTRICT

SCALE: AS NOTED
DATE: 5/8/2013
DRAWN: R. PRASAD
REVIEWED:

BIOLOGICAL NUTRIENT REMOVAL
AERATION BASINS
LOWER LEVEL PLAN

FILE NAME: 190077_S06.dwg
CONTRACT NUMBER: 70-713-7#1A
DRAWING NUMBER: S06
SHEET 14 OF 47

C:\pwworking\sac\d0407107\190077_S06

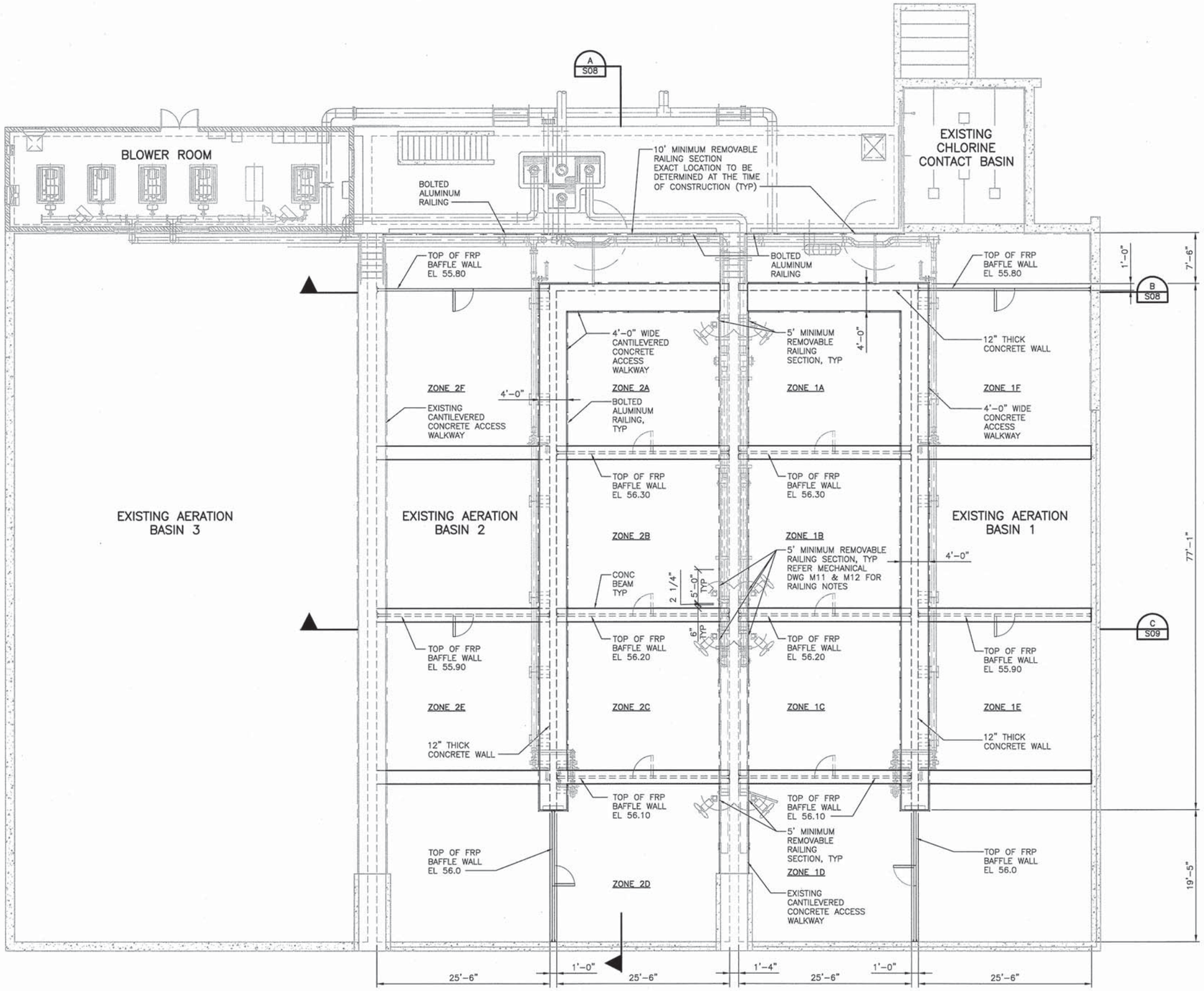

FLOOR PLAN – UPPER LEVEL

1/8" = 1'-0"

BAR LENGTH ON ORIGINAL DRAWING EQUALS ONE INCH. ADJUST SCALE ACCORDINGLY

HDR Engineering, Inc.

REGISTERED PROFESSIONAL ENGINEER DAVID TAVANCHEZ NO. 54655 EXP. 12/31/13 CIVIL STATE OF CALIFORNIA 5/10/13

NO	DATE	REVISION	BY
	05-14-2013	ISSUED FOR BID	CAO

RUSSIAN RIVER COUNTY SANITATION DISTRICT

SCALE: AS NOTED
DATE: 5/8/2013
DRAWN: R. PRASAD
REVIEWED:

BIOLOGICAL NUTRIENT REMOVAL
AERATION BASINS
UPPER LEVEL PLAN

FILE NAME: 190077_S07.dwg
CONTRACT NUMBER: 70-713-7#1A
DRAWING NUMBER: S07
SHEET 15 OF 47

C:\pwworking\sac\d0407107\190077_S07

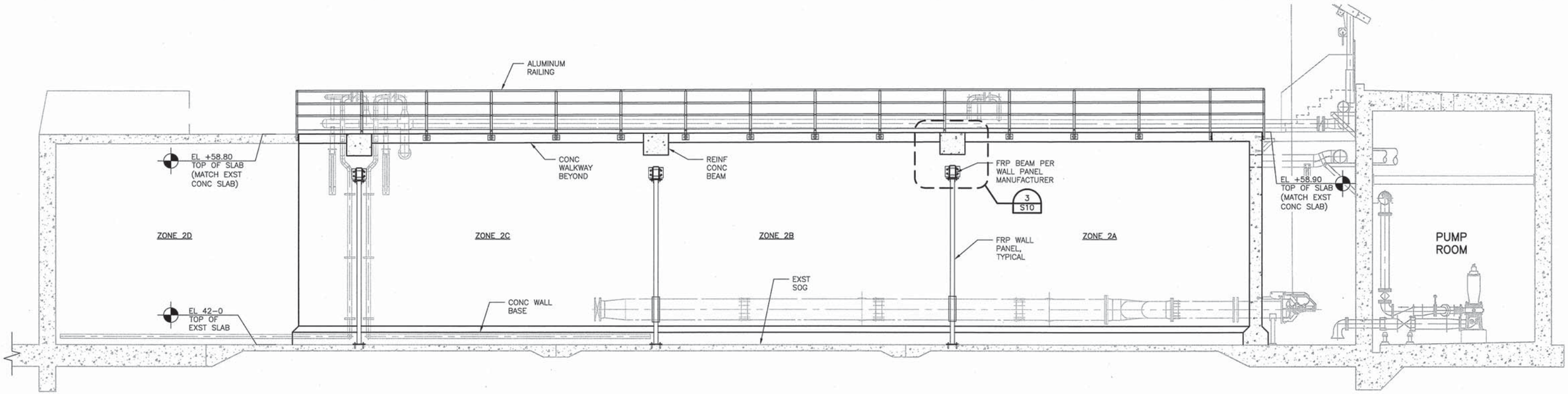

SECTION
1/4" = 1'-0"
A S06 A S07

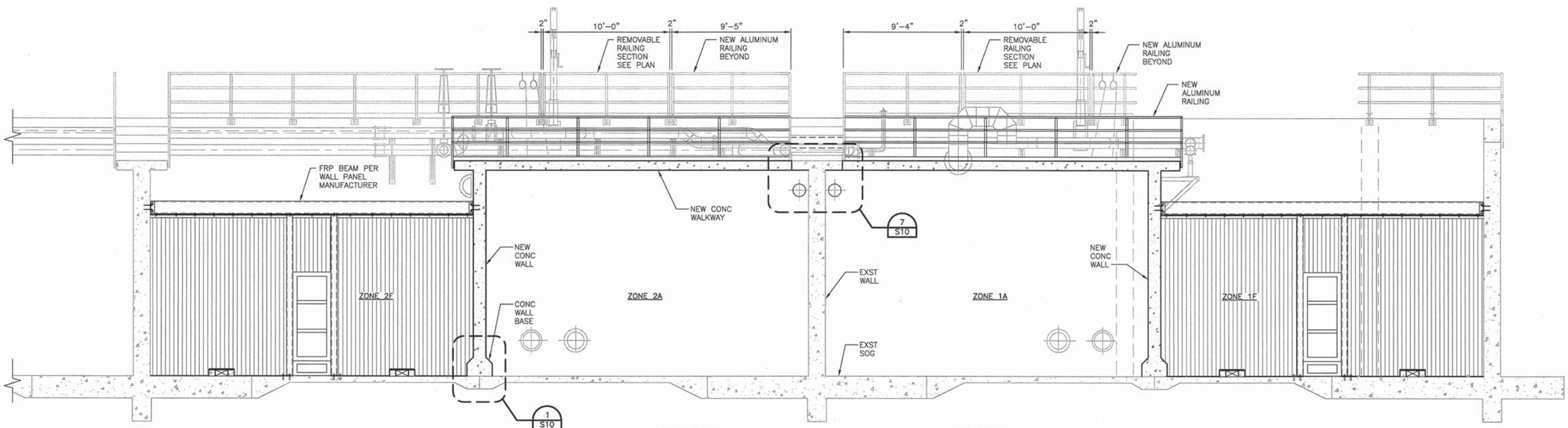

SECTION
1/4" = 1'-0"
B S06 B S07

BAR LENGTH ON ORIGINAL DRAWING EQUALS ONE INCH. ADJUST SCALE ACCORDINGLY

HDR Engineering, Inc.

REGISTERED PROFESSIONAL ENGINEER DAVID TAKANGAR NO. 54655 EXP. 12/31/13 CIVIL STATE OF CALIFORNIA
5/10/13

NO	DATE	REVISION	BY
	05-14-2013	ISSUED FOR BID	CAO

RUSSIAN RIVER COUNTY SANITATION DISTRICT

SCALE: AS NOTED
DATE: 5/8/2013
DRAWN: R. PRASAD
REVIEWED:

BIOLOGICAL NUTRIENT REMOVAL
AERATION BASINS
SECTIONS 1

FILE NAME: 190077_S08.dwg
CONTRACT NUMBER: 70-713-7#1A
DRAWING NUMBER: S08
SHEET 16 OF 47

C:\pwworking\sac\d0407107\190077_S08

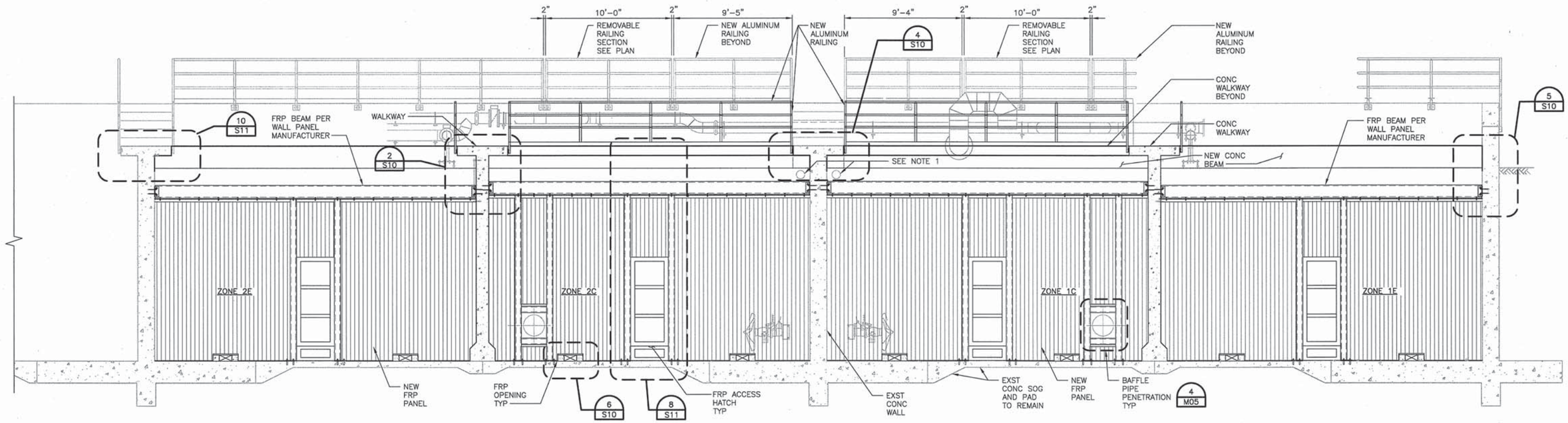

SECTION

1/4" = 1'-0"

C S06 C S07

NOTE:

1. CLEARANCE BETWEEN TOP OF FRP BAFFLES AND NEW CONCRETE BEAMS IS MINIMAL FOR 8" PI PIPE. CONTRACTOR TO COORDINATE AND FIELD VERIFY CLEARANCE. TYPICAL FOR 4 LOCATIONS.

BAR LENGTH ON ORIGINAL DRAWING EQUALS ONE INCH. ADJUST SCALE ACCORDINGLY

HDR Engineering, Inc.

REGISTERED PROFESSIONAL ENGINEER OMAD TAVANGAR NO. 54655 EXP. 12/31/13 CIVIL STATE OF CALIFORNIA

5/10/13

NO	DATE	REVISION	BY
	05-14-2013	ISSUED FOR BID	CAO

RUSSIAN RIVER COUNTY SANITATION DISTRICT

SCALE: AS NOTED | DATE: 5/8/2013

DRAWN: R. PRASAD

REVIEWED:

BIOLOGICAL NUTRIENT REMOVAL

AERATION BASINS SECTIONS 2

FILE NAME: 190077_S09.dwg

CONTRACT NUMBER: 70-713-7#1A

DRAWING NUMBER: S09

SHEET 17 OF 47

C:\pwworking\sac\d0407107\190077_S09

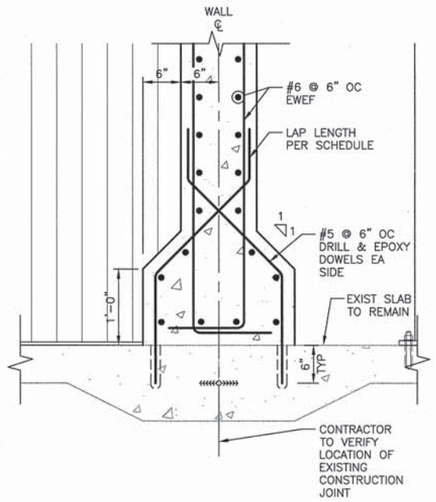

DETAIL 1 / S08
1" = 1'-0"

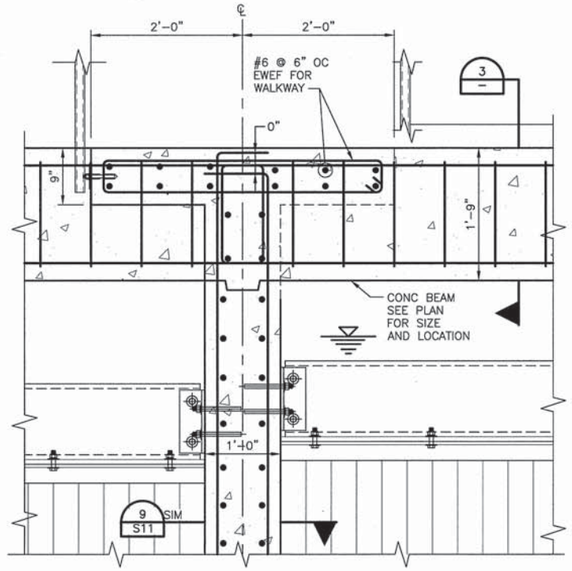

DETAIL 2 / S09
1" = 1'-0"

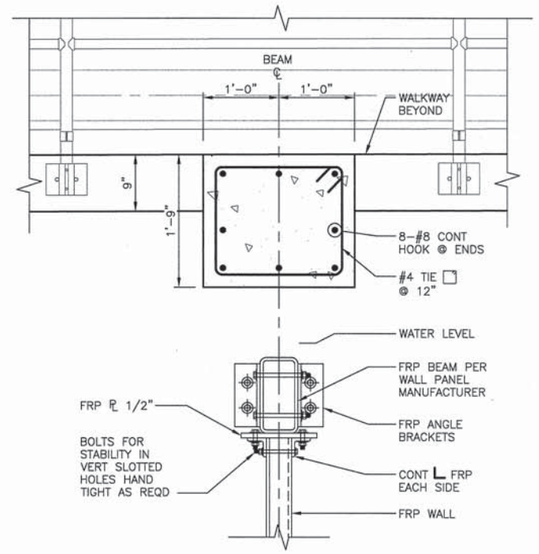

DETAIL 3
1" = 1'-0"

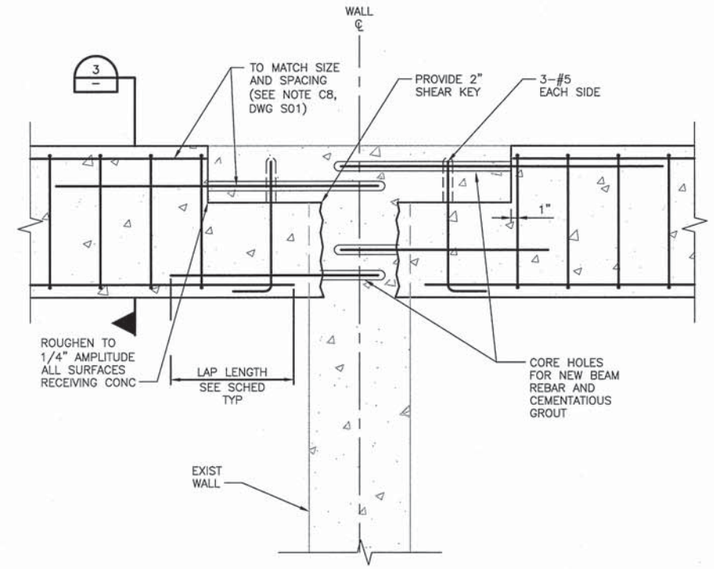

DETAIL 4 / S09
1" = 1'-0"

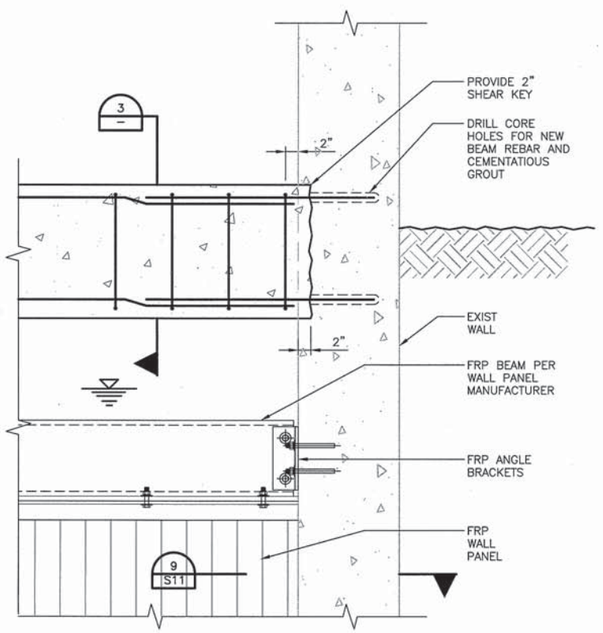

DETAIL 5 / S09
1" = 1'-0"

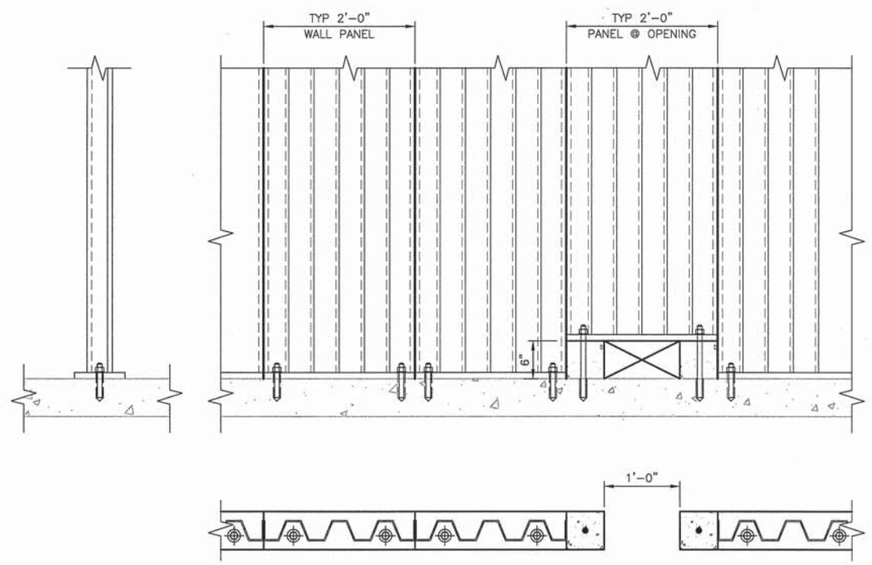

DETAIL 6 / S09
1" = 1'-0"

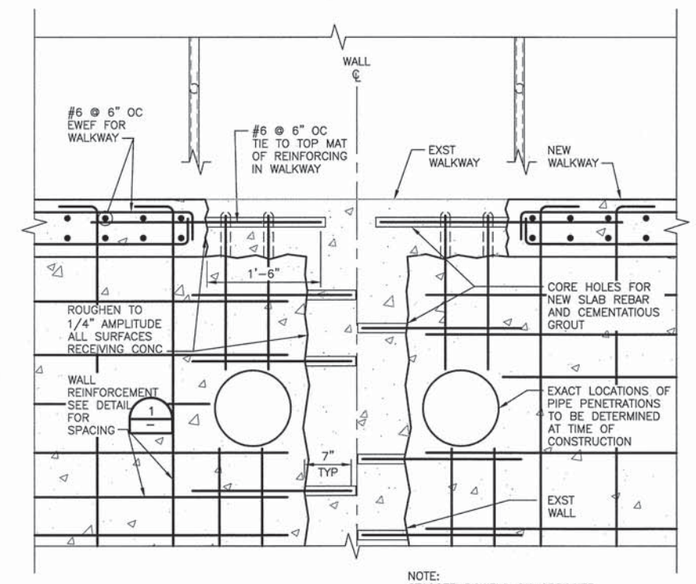

NOTE:
STAGGER DOWELS ON OPPOSITE SIDES OF EXISTING WALL BY 3 INCHES TO AVOID CONFLICT (VERTICALLY).

DETAIL 7 / S08
1" = 1'-0"

BAR LENGTH ON ORIGINAL DRAWING EQUALS ONE INCH. ADJUST SCALE ACCORDINGLY

HDR Engineering, Inc.

REGISTERED PROFESSIONAL ENGINEER DONALD RAVANGARD NO. 54655 EXP. 12/31/13 CIVIL STATE OF CALIFORNIA
5/10/13

NO	DATE	REVISION	BY
	05-14-2013	ISSUED FOR BID	CAO

RUSSIAN RIVER COUNTY SANITATION DISTRICT

SCALE: AS NOTED
DATE: 5/8/2013
DRAWN: R. PRASAD
REVIEWED:

BIOLOGICAL NUTRIENT REMOVAL
AERATION BASINS
DETAILS 1

FILE NAME: 190077_S10.dwg
CONTRACT NUMBER: 70-713-7#1A
DRAWING NUMBER: S10
SHEET 18 OF 47

C:\pwworking\sac\d0407107\190077_S10

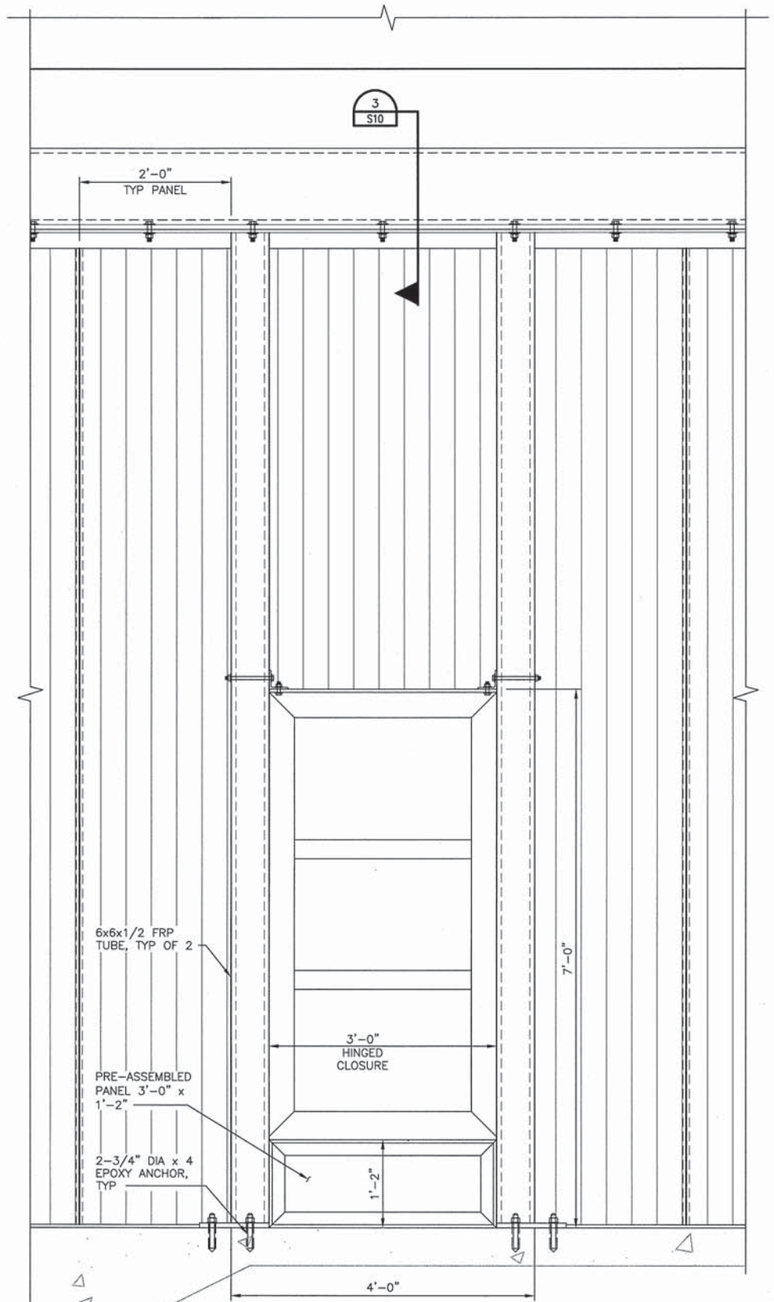

DETAIL AT WALL ACCESS HATCH (8 / S09)
1" = 1'-0"

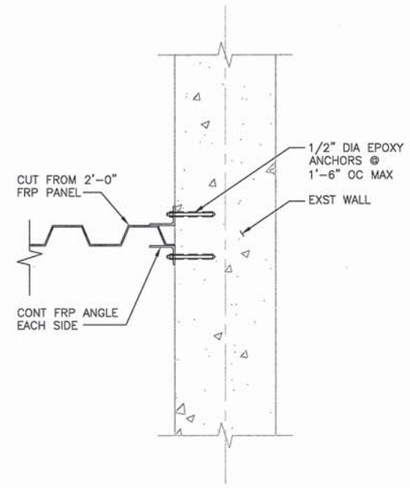

PANEL SUPPORT DETAIL (9 / S10)
1" = 1'-0"

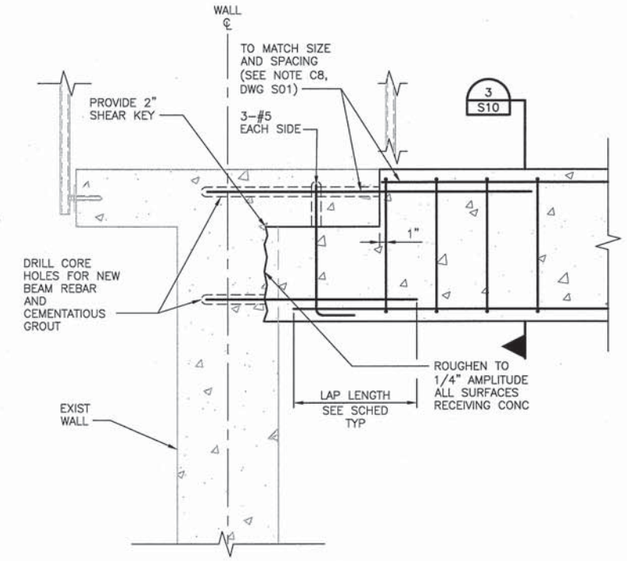

DETAIL (10 / S09)
1" = 1'-0"

BAR LENGTH ON ORIGINAL DRAWING EQUALS ONE INCH. ADJUST SCALE ACCORDINGLY

HDR Engineering, Inc.

REGISTERED PROFESSIONAL ENGINEER
RONALD TAVANGAR
NO. 54655
EXP. 12/31/13
CIVIL
STATE OF CALIFORNIA
5/10/13

NO	DATE	REVISION	BY
	05-14-2013	ISSUED FOR BID	CAO

RUSSIAN RIVER COUNTY
SANITATION DISTRICT

SCALE: AS NOTED
DATE: 5/8/2013
DRAWN: R. PRASAD
REVIEWED:

BIOLOGICAL NUTRIENT REMOVAL
AERATION BASINS
DETAILS 2

FILE NAME: 190077_S11.dwg
CONTRACT NUMBER: 70-713-7#1A
DRAWING NUMBER: S11
SHEET 19 OF 47

C:\pwworking\sac\d0407107\190077_S11

GENERAL PIPE SUPPORT NOTES:

1. WHERE NO REFERENCE TO PIPE SUPPORT SYSTEMS IS GIVEN ON DRAWINGS, CONTRACTOR SHALL USE APPROPRIATE SYSTEM. SEE 'TABLE B', THIS DRAWING. PIPE AND CONDUIT SUPPORT SYSTEMS SHALL BE DESIGNED BY CONTRACTOR NOT TO EXCEED MAXIMUM LOAD AND SPAN REQUIREMENTS SPECIFIED.
2. UNLESS OTHERWISE SPECIFIED, HANGERS AND SUPPORTS NUTS, BOLTS AND WASHERS SHALL BE TYPE 316 STAINLESS STEEL.
3. UNLESS OTHERWISE SPECIFIED, EXPANSION ANCHORS SHALL NOT BE USED.
4. MSS REFERS TO STANDARD PRACTICE SP58 AND SP69.
5. HANGER BRACKETS AND SUPPORT COMPONENTS MAY BE INTERCHANGED.
6. CONCRETE INSERTS IN AREAS BELOW WATER SURFACE OR NORMALLY SUBJECT TO SUBMERGING SHALL BE EMBEDDED STAINLESS STEEL ANCHOR BOLTS OR APPROVED EQUAL.
7. PROVIDE PLASTIC OR RUBBER CHANNEL END CAPS AT EXPOSED ENDS OF CHANNELS 7'-0 ABOVE FLOOR AND BELOW.
8. MAXIMUM DESIGN WEIGHTS AND LOADS SHALL BE AS SHOWN IN 'TABLE A' OR AS SHOWN IN DETAILS ON DRAWING M02 THROUGH M06.
9. ALL PIPING SUPPORTED BY HANGERS AND/OR STRUCTURAL ATTACHMENTS SHALL BE BRACED AGAINST HORIZONTAL, VERTICAL, AXIAL, AND LONGITUDINAL SWAY. BRACINGS SHALL BE CALCULATED TO RESIST SEISMIC LOADINGS AS SPECIFIED BY SMACNA AND AS SPECIFIED.
10. FITTINGS SHALL NOT BE LESS THAN MSS CLASS B.
11. UNLESS OTHERWISE SPECIFIED, TRAPEZE AND PIPE RACK COMPONENTS SHALL HAVE A MINIMUM STEEL THICKNESS OF 12 GAGE WITH A MAXIMUM DEFLECTION 1/240 OF THE SPAN. MINIMUM CHANNEL COMPONENT SIZE SHALL BE 1 5/8" SQUARE AS MANUFACTURED BY SUPER STRUT, UNISTRUT, ELCEN, OR APPROVED EQUAL.
12. FOR STRUCTURAL ATTACHMENTS SEE DRAWING M03.
13. NOT ALL PIPE HANGERS ARE USED IN THESE CONTRACT PLANS.

GENERAL MECHANICAL NOTES:

1. MECHANICAL DRAWINGS SHOW ONLY GENERAL ARRANGEMENTS FOR PIPING AND EQUIPMENT AND DO NOT INCLUDE ALL PIPING LOGIC, VALVES, INSTRUMENTS, CONTROL DEVICES, AND APPURTENANCES THAT ARE INCLUDED IN PROCESS AND INSTRUMENTATION DIAGRAMS OR REQUIRED BY THE SPECIFICATIONS. CONTRACTOR SHALL PROVIDE ALL PIPING, EQUIPMENT, AND APPURTENANT DEVICES, INCLUDING ALL THAT ARE INDICATED IN EITHER MECHANICAL DRAWINGS, PROCESS AND INSTRUMENTATION DIAGRAMS, OR SPECIFICATIONS TO PROVIDE COMPLETE PROCESS SYSTEMS.
2. EQUIPMENT AND PIPING COORDINATION AND INSTALLATION DRAWINGS ARE REQUIRED.
3. LIFTING EYES ARE REQUIRED FOR ALL EQUIPMENT. PROVIDE TWO INSERTS FOR LIFTING DEVICES STRADDLING EQUIPMENT SUCH AS OVER ALL PUMPS, MOTORS, VALVES, OR OTHER MECHANICAL UNITS OF MORE THAN 100 LBS, AND AREAS SHOWN ON THE DRAWINGS OR AS DESIGNATED BY OWNER. LIFTING DEVICES SHALL BE STAINLESS STEEL TYPE 316 ASSEMBLY.
4. PIPE SUPPORTS AND SEISMIC RESTRAINTS SHALL BE PROVIDED PER MECHANICAL DETAILS AND SPECIFICATIONS. AT LOCATIONS WHERE SPECIFIC TYPES OF SUPPORTS OR SEISMIC RESTRAINTS ARE INDICATED, CONTRACTOR SHALL PROVIDE INDICATED TYPES. AT LOCATIONS WHERE SUPPORTS OR SEISMIC RESTRAINTS ARE REQUIRED BUT NO SPECIFIC TYPES ARE INDICATED, CONTRACTOR SHALL SELECT AND PROVIDE SUPPORTS AND RESTRAINTS AS REQUIRED ON DRAWINGS M01 THROUGH M06. SUPPORTS AND RESTRAINTS SHALL BE SUBMITTED FOR REVIEW AS PART OF EQUIPMENT AND PIPING COORDINATION AND INSTALLATION DRAWINGS.
5. PIPE PENETRATIONS THROUGH STRUCTURE WALLS, FLOOR, AND CEILINGS SHALL BE PROVIDED AS INDICATED IN SPECIFICATIONS, UNLESS OTHERWISE INDICATED.

TABLE A – ROD SIZE AND PIPE SPAN SELECTIONS

NOMINAL PIPE SIZE (INCHES)	SUPPORT ROD SIZE AND MAXIMUM LOAD PER ROD. SEE NOTE 2		MAXIMUM PIPE SPAN (FEET) SEE NOTE 3			
	ROD SIZE (INCHES)	MAX LOAD (POUNDS)	STEEL	COPPER	PLASTIC SEE NOTE 4	CAST IRON SEE NOTE 5
3/8 TO 3/4	3/8	610	5	5	CONTINUOUS	---
1	3/8	610	5	5	5	---
1 1/4	3/8	610	5	5	5	---
1 1/2	3/8	610	5	5	5	---
2	3/8	610	10	5	5	---
2 1/2	3/8	610	10	10	5	12 FEET FOR PRESSURE PIPE; 10 FEET FOR SOIL PIPE
3	3/8	610	10	20	5	
4	1/2	1130	10	20	5	
6	5/8	1810	15	20	5	
8	3/4	2710	15	20	5	
10	3/4	2710	20	---	5	
12	7/8	3770	20	---	10	
14	1	4960	20	---	---	
16	1	4960	20	---	---	
18	1	4960	20	---	---	
20	1 1/4	8000	20	---	---	
24	1 1/4	8000	20	---	---	

NOTES:

1. DESIGN WEIGHT SHALL BE TWICE THE WEIGHT OF PIPE FULL OF WATER PLUS WEIGHTS OF VALVES, FITTINGS, INSULATING MATERIALS AND SUSPENDED HANGER COMPONENTS ON RUN OF PIPE BEING SUPPORTED.
2. ROD SIZES SHOWN ARE FOR SUPPORT OF A SINGLE PIPE. WHEN SUPPORTING MORE THAN ONE PIPE, ROD SHALL BE SIZED USING DESIGN WEIGHTS (SEE NOTE 1) TO DETERMINE TOTAL DESIGN LOAD. TOTAL DESIGN LOAD SHALL NOT EXCEED MAXIMUM LOADS IN 'TABLE A' ABOVE.
3. PIPE SHALL NOT HAVE POCKETS FORMED IN SPAN DUE TO SAGGING OF PIPE BETWEEN SUPPORTS CAUSED BY WEIGHT OF PIPE, MEDIUM IN PIPE, INSULATION, VALVES AND FITTINGS.
4. SPAN SHOWN IS FOR SCHEDULE 80 PVC PIPE AT 100°F. SPANS FOR OTHER PLASTICS, OTHER PVC PIPE SCHEDULES AND PIPES AT HIGHER TEMPERATURES SHALL BE SHORTENED IN ACCORDANCE WITH PIPE MANUFACTURER'S RECOMMENDATIONS. "CONTINUOUS" MEANS PIPE SHALL BE IN UNISTRUT OR SIMILAR CHANNEL.
5. PROVIDE A MINIMUM OF ONE PIPE HANGER PER PIPE LENGTH, WITHIN 4-INCHES OF BELL.
6. PIPE HANGER AND SUPPORT SELECTION SHALL BE IN ACCORDANCE WITH 'TABLE B' AND AS SPECIFIED.

TABLE B – HANGER AND SUPPORT SELECTIONS

SYSTEM TEMP RANGE DEG F	INSULATION NOTE 1	PIPE ATTACHMENTS						BUILDING STRUCTURAL ATTACHMENTS		
		HORIZONTAL					VERTICAL	STEEL AND/OR MALLABLE IRON		
		STEEL BANDS	STEEL CLAMPS	CAST IRON HANGING ROLLS	THERMAL HANGER SHIELDS	STEEL OR CAST IRON STANCHIONS	STEEL RISER CLAMPS	INSERTS	WELDED & BOLTED ATTACHMENTS	BRACKETS
HOT A-1 120 TO 450	COVERED	1,2	3	4, 5	SEE SPEC	10	11	A	M	B, G
	BARE	1,2	3 (ALLOY)	4, 5	NONE	10				
AMBIENT B 60 TO 119	COVERED	1,2	3	4, 5	SEE SPEC	10	11	A	M	B, G
	BARE	1,2	3	4, 5	NONE	10				
COLD C-1 33 TO 59	COVERED	1,2,3	3	4, 5	SEE SPEC	10	11	A	M	B, G
	BARE	1,2,3	3	4, 5	NONE	10				

NOTES:

1. HANGERS ON INSULATED SYSTEMS SHALL INCORPORATE THERMAL HANGER SHIELDS.
2. HANGER AND SUPPORT SPACING SHALL BE IN ACCORDANCE WITH 'TABLE A'.

BAR LENGTH ON ORIGINAL DRAWING EQUALS ONE INCH. ADJUST SCALE ACCORDINGLY

HDR Engineering, Inc.

REGISTERED PROFESSIONAL ENGINEER CRAIG A. OLSON NO. 39818 EXP. 12-31-13 CIVIL STATE OF CALIFORNIA 05-10-13

NO	DATE	REVISION	BY
	05-14-2013	ISSUED FOR BID	CAO

RUSSIAN RIVER COUNTY SANITATION DISTRICT

SCALE: NONE | DATE: 5/10/2013
DRAWN: RGS
REVIEWED:

BIOLOGICAL NUTRIENT REMOVAL
GENERAL MECHANICAL NOTES

FILE NAME: 4M01.dwg
CONTRACT NUMBER: 70-713-7#1A
DRAWING NUMBER: M01
SHEET 20 OF 47

C:\pwworking\sac\d0407107\4M01

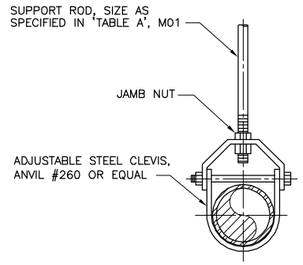

1/2" THROUGH 12" PIPE

TYPE 1 PIPE HANGER (1 / –)

NTS

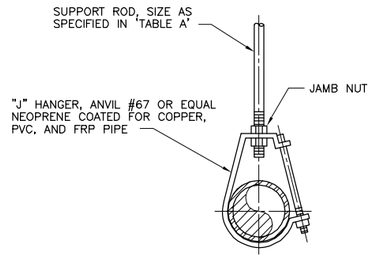

1/2" THROUGH 8" PIPE

TYPE 2 PIPE HANGER (2 / –)

NTS

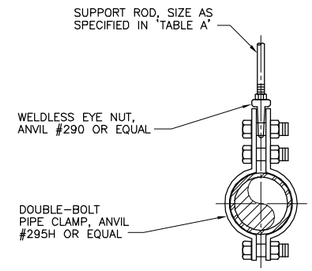

3/4" THROUGH 12" PIPE

TYPE 3 PIPE HANGER (3 / –)

NTS

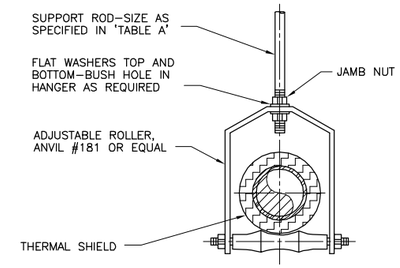

3/8" THROUGH 12" PIPE

TYPE 4 PIPE HANGER (4 / –)

NTS

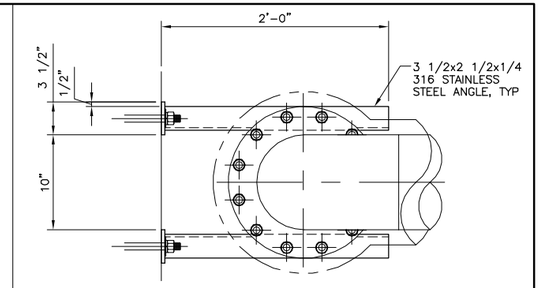

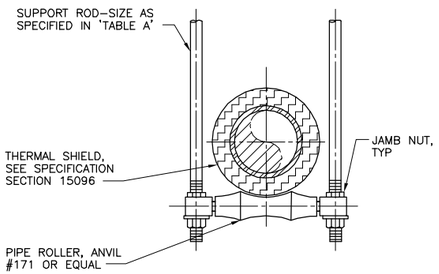

6" THROUGH 12" PIPE

TYPE 5 PIPE HANGER (5 / –)

NTS

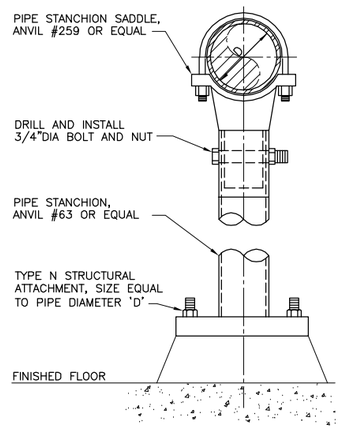

4" THROUGH 12" PIPE

TYPE 10 PIPE HANGER (6 / –)

NTS

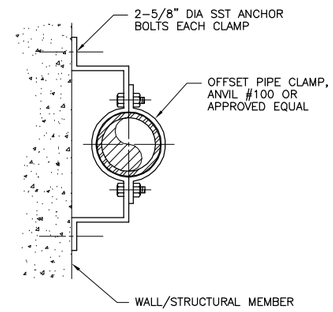

3/4" THROUGH 8" PIPE

TYPE 11 PIPE HANGER (7 / –)

NTS

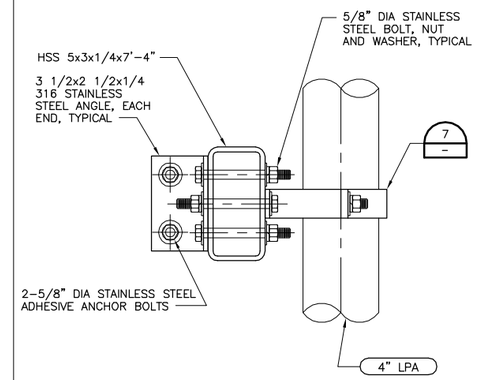

3/4" THROUGH 8" PIPE

TYPE 12 PIPE HANGER (8 / –)

NTS

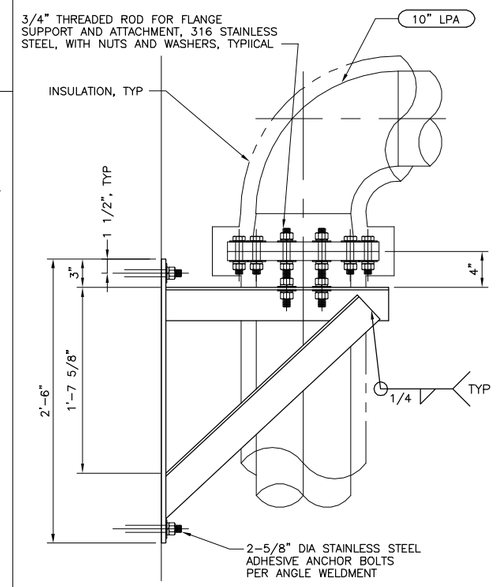

TYPE 13 PIPE HANGER (9 / –)

NTS

BAR LENGTH ON ORIGINAL DRAWING EQUALS ONE INCH. ADJUST SCALE ACCORDINGLY

HDR Engineering, Inc.

REGISTERED PROFESSIONAL ENGINEER CRAIG A. OLSON NO. 39819 EXP. 12-31-13 CIVIL STATE OF CALIFORNIA 05-10-13

NO	DATE	REVISION	BY
	05-14-2013	ISSUED FOR BID	CAO

RUSSIAN RIVER COUNTY SANITATION DISTRICT

SCALE: AS NOTED
DATE: 5/10/2013
DRAWN: RGS
REVIEWED:

BIOLOGICAL NUTRIENT REMOVAL

STANDARD MECHANICAL DETAILS 1

FILE NAME: 4M02.dwg
CONTRACT NUMBER: 70-713-7#1A
DRAWING NUMBER: M02
SHEET 21 OF 47

C:\pwworking\sac\d0407107\4M02

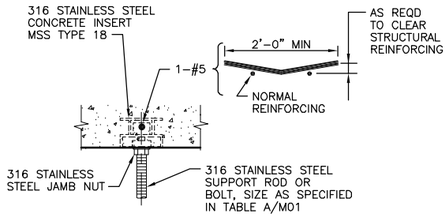

MAXIMUM ALLOWABLE LOAD:	
ROD SIZE	LOAD
3/8"	610 LBS
1/2"	1130 LBS
5/8"-7/8"	1140 LBS

SPACING SHALL BE AS REQUIRED, BUT SHALL NOT EXCEED THOSE SPANS SHOWN IN TABLE A/M01.

TYPE A STRUCTURAL ATTACHMENT (1/–)

NTS

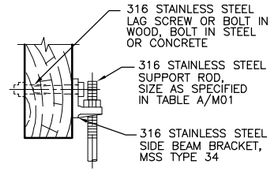

MAXIMUM ALLOWABLE LOAD:		
ROD SIZE	LOAD WOOD	LOAD CONCRETE/STEEL
3/8"	390 LBS	610 LBS
1/2"	640 LBS	1130 LBS
5/8"	760 LBS	1810 LBS
3/4"	830 LBS	2710 LBS
7/8"	830 LBS	3770 LBS

SPACING SHALL BE AS REQUIRED, BUT SHALL NOT EXCEED THOSE SPANS SHOWN IN TABLE A/M01.

TYPE B STRUCTURAL ATTACHMENT (2/–)

NTS

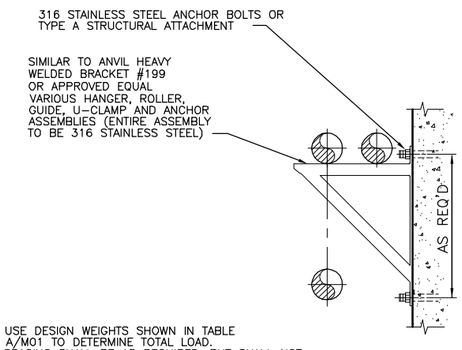

USE DESIGN WEIGHTS SHOWN IN TABLE A/M01 TO DETERMINE TOTAL LOAD. SPACING SHALL BE AS REQUIRED, BUT SHALL NOT EXCEED THOSE SPANS SHOWN IN TABLE A/M01.

TYPE G STRUCTURAL ATTACHMENT (3/–)

NTS

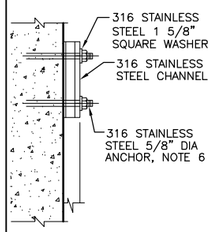

NOTES:

1. EPOXY ANCHORS SHALL BE USED IN-LIEU OF EXPANSION ANCHORS WHERE ATTACHMENT IS NOT IN TENSION.
2. WHEN ATTACHMENTS ARE PLACED IN TENSION, SUCH AS ON CEILING, TYPE "A" STRUCTURAL ATTACHMENT ON THIS DRAWING OR CAST IN ANCHOR BOLT SHALL BE USED
3. BRACKET MAY BE WALL OR CEILING MOUNTED, AND MAY BE USED WITH VARIOUS HANGER, GUIDE, RACK, OR ANCHOR AND SWAY BRACE ASSEMBLIES.
4. MAXIMUM LOAD CAPACITY SHALL BE AS RECOMMENDED BY CHANNEL MANUFACTURER.
5. SPACING SHALL BE AS REQUIRED, BUT SHALL NOT EXCEED THOSE SPANS SHOWN IN TABLE A/M01.
6. STAINLESS STEEL EPOXY ANCHOR, ANCHOR BOLT, OR TYPE A STRUCTURAL ATTACHMENT AT 18" ON CENTER MAXIMUM UNLESS OTHERWISE SHOWN OR SPECIFIED. EXPANSION ANCHORS SHALL NOT BE USED WHERE APPLIED LOADS PLACE THEM IN TENSION.

TYPE M STRUCTURAL ATTACHMENT (4/–)

NTS

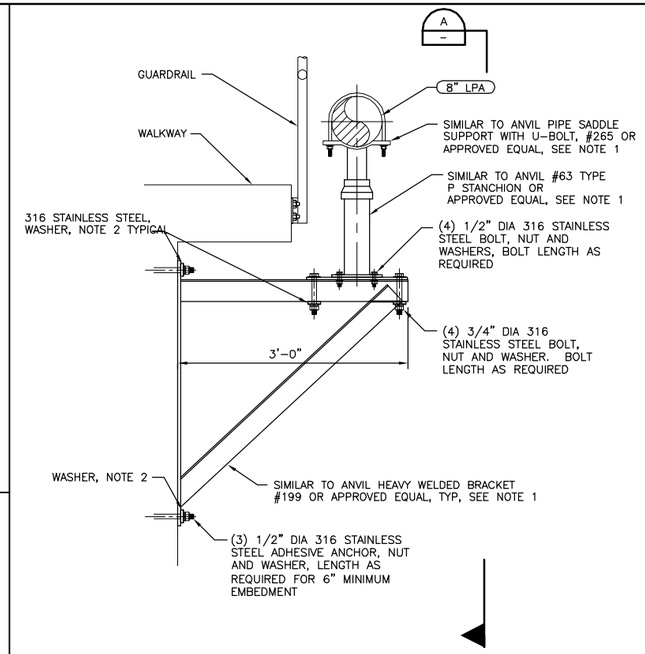

PIPE SUPPORT FOR LPA (5/–)

NTS

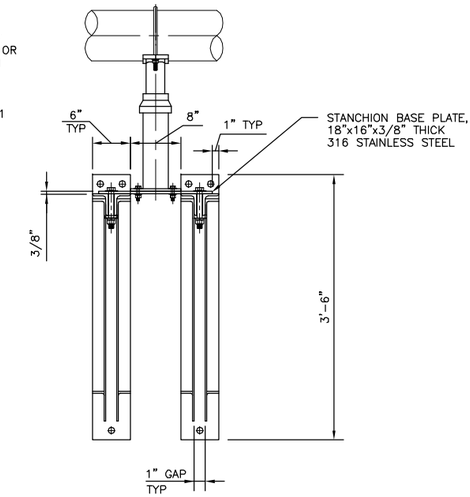

ELEVATION (A/–)

NTS

NOTES:(FOR DETAIL 5, 6, 7, 8 AND 9)

1. ALL SUPPORTS, BRACKETS AND ANCHOR BOLTS TO BE 316 STAINLESS STEEL.
2. 1/4"x1 1/2" SQUARE PLATE WASHER, CENTER DRILL FOR ANCHOR BOLT, 316 STAINLESS STEEL.
3. TO MATCH SIZING AND MATERIAL FROM HEAVY WELDED BRACKET SUPPLIED.

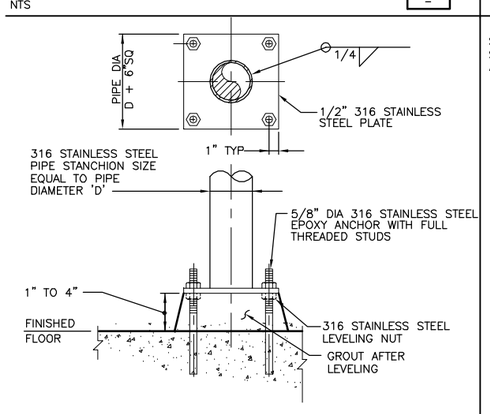

SPACING SHALL BE AS REQUIRED, BUT SHALL NOT EXCEED THOSE SPANS SHOWN IN TABLE A/M01.

TYPE N STRUCTURAL ATTACHMENT (6/–)

NTS

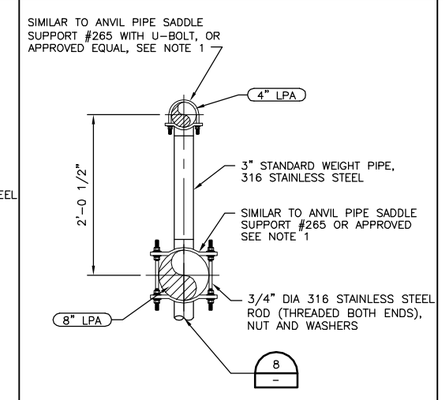

PIPE SUPPORT FOR LPA (7/–)

NTS

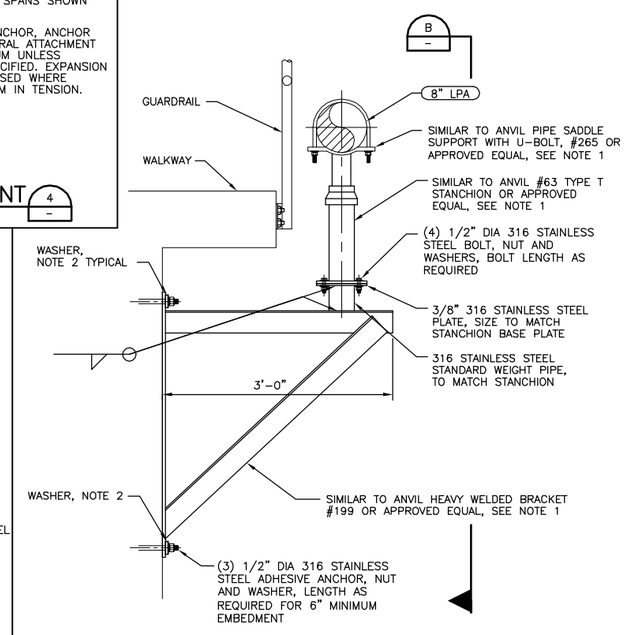

PIPE SUPPORT FOR LPA (8/–)

NTS

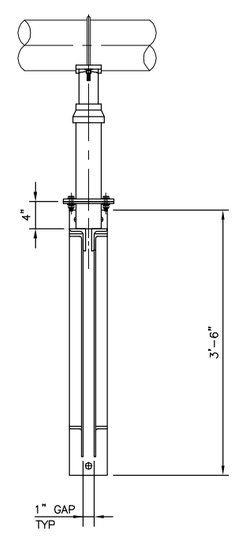

ELEVATION (B/–)

NTS

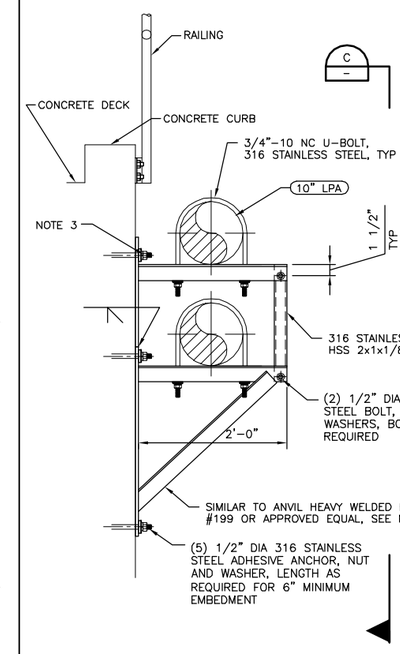

PIPE SUPPORT FOR LPA (9/–)

NTS

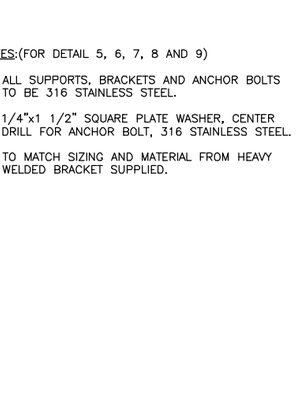

ELEVATION (C/–)

NTS

BAR LENGTH ON ORIGINAL DRAWING EQUALS ONE INCH. ADJUST SCALE ACCORDINGLY

HDR Engineering, Inc.

REGISTERED PROFESSIONAL ENGINEER CRAIG A. GLSON NO. 39819 EXP. 12-31-13 CIVIL STATE OF CALIFORNIA 05-10-13

NO	DATE	REVISION	BY
	05-14-2013	ISSUED FOR BID	CAO

RUSSIAN RIVER COUNTY SANITATION DISTRICT

SCALE: AS NOTED | DATE: 5/10/2013
DRAWN: RGS
REVIEWED:

BIOLOGICAL NUTRIENT REMOVAL
STANDARD MECHANICAL DETAILS 2

FILE NAME: 4M03.dwg
CONTRACT NUMBER: 70-713-78/1A
DRAWING NUMBER: M03
SHEET 22 OF 47

C:\pwworking\sac\d0407107\4M03

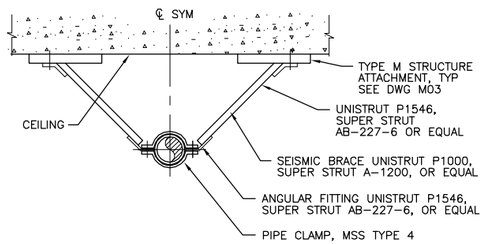

TYPE A SEISMIC LATERAL BRACING

1 / –

NTS

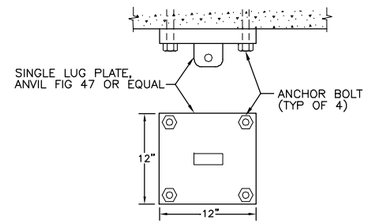

MAXIMUM ALLOWABLE LOAD:			
PLATE THICKNESS	ROD SIZE	BOLT SIZE	LOAD
3/4"	1"	3/4"	4960 LBS
1"	1 1/4"	7/8"	8000 LBS
1"	1 1/2"	1"	11630 LBS

ATTACH ROD TO TYPE 316 STAINLESS STEEL PLATE WITH FORGED TYPE 316 STAINLESS STEEL CLEVIS, ANVIL FIG 299 OR EQUAL

DETAIL

2 / –

NTS

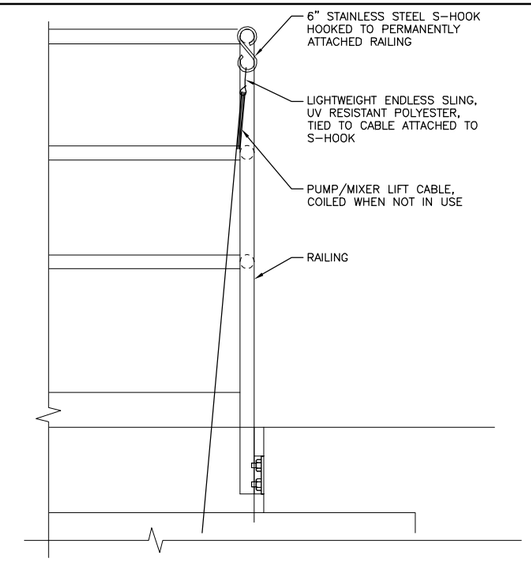

CABLE HANGING DETAIL

3 / –

NTS

TABLE C – PIPE SPAN FOR SEISMIC BRACING		
NORMAL PIPE SIZES (INCHES)	MAXIMUM PIPE SPAN (FEET)	ROD SIZE (INCHES)
2	15	3/8
2-1/2	15	3/8
3	15	3/8
4	15	3/8
6	20	1/2
8	20	5/8
10	30	4/5
12	30	1
14	30	1
16	35	1
18	35	1

TABLE D – HANGER TEMPERATURE AND MATERIALS FOR SEISMIC BRACING							
X INDICATES PIPE HANGERS SUITABLE FOR SEISMIC BRACING AT CONDITIONS LISTED BELOW	SEE DWG M02 FOR PIPE HANGER TYPE						
	1	2	3	4	5	10	11
SERVICE TEMPERATURE							
33\F-59\F OR 120\F-450\F – INSULATED			X				X
33\F-59\F OR 120\F-450\F – UNINSULATED	X	X	X			X	X
60\F-119\F	X	X	X			X	X
PIPING MATERIALS							
STEEL	X	X	X				X
COPPER		X					
PLASTIC	X	X					X
CAST IRON	X	X				X	X

SEISMIC BRACING NOTES:

1. ALL PIPES SHALL BE BRACED TO RESIST LATERAL AND LONGITUDINAL SEISMIC LOADS IN ACCORDANCE WITH SPECIFICATION SECTION 15090.
2. SEE TABLE 'C' FOR MAXIMUM SPACING. AND PIPE SIZES.
3. SEE TABLE 'D' FOR ACCEPTABLE PIPE HANGERS.
4. PROVIDE 1/16" THICK NEOPRENE ISOLATION BETWEEN COPPER PIPING AND HANGERS.
5. MATERIAL: ALL COMPONENTS OF SEISMIC BRACING SHALL BE FABRICATED OF TYPE 316 STAINLESS STEEL.

BAR LENGTH ON ORIGINAL DRAWING EQUALS ONE INCH. ADJUST SCALE ACCORDINGLY

HDR Engineering, Inc.

REGISTERED PROFESSIONAL ENGINEER CRAIG A. OLSON NO. 39818 EXP. 12-31-13 CIVIL STATE OF CALIFORNIA 05-10-13

NO	DATE	REVISION	BY
	05-14-2013	ISSUED FOR BID	CAO

RUSSIAN RIVER COUNTY SANITATION DISTRICT

SCALE: AS NOTED
DATE: 5/10/2013
DRAWN: RGS
REVIEWED:

BIOLOGICAL NUTRIENT REMOVAL
STANDARD MECHANICAL DETAILS 3

FILE NAME: 4M04.dwg
CONTRACT NUMBER: 70-713-7M1A
DRAWING NUMBER: M04
SHEET 23 OF 47

C:\pwworking\sac\d0407107\4M04

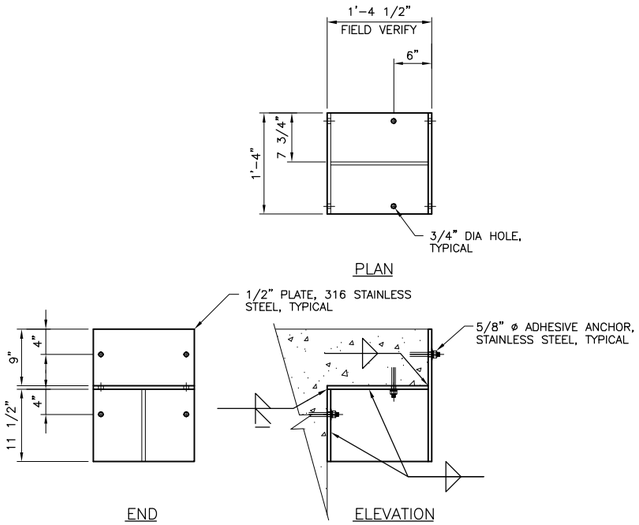

DAVIT CRANE SOCKET SUPPORT DETAIL

NTS

1

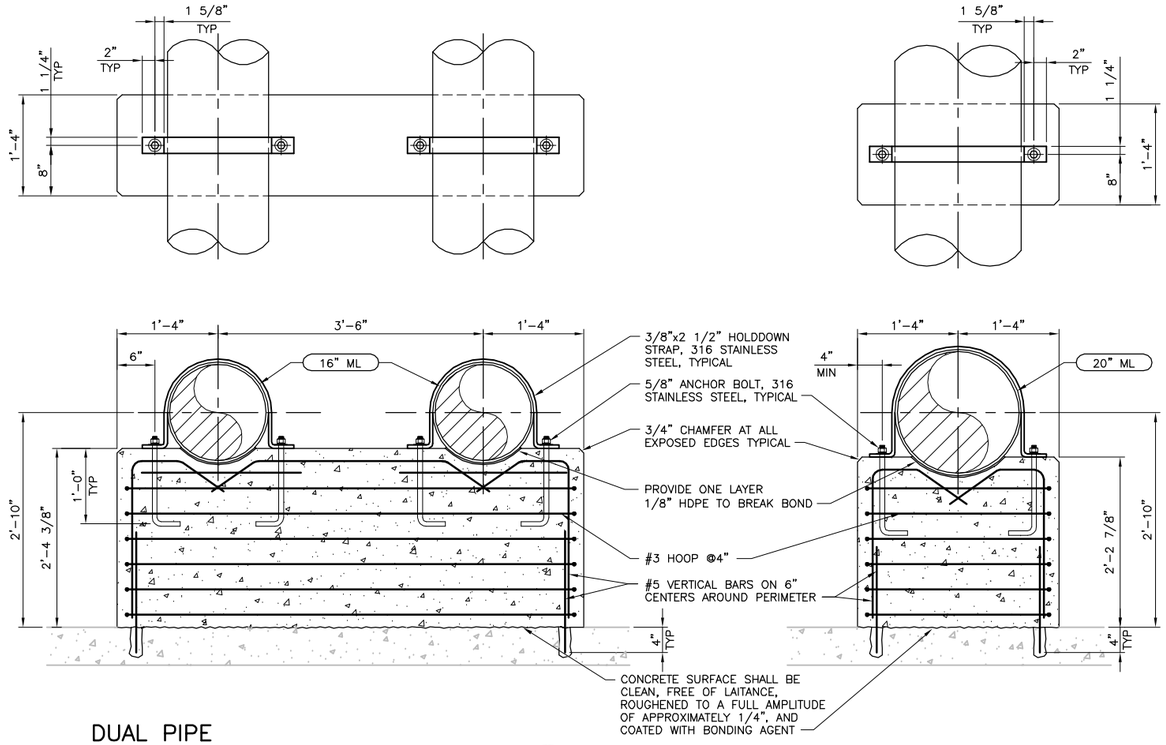

DUAL PIPE CONCRETE PEDESTAL DETAIL

NTS

2

CONCRETE PEDESTAL DETAIL

NTS

3

NOTES:

1. FOR NEW EQUIPMENT PADS ON EXISTING SLABS, DRILL INTO EXISTING SLAB AT 6" CENTERS AROUND PERIMETER OF EQUIPMENT PADS AND SET #5 HOOKED DOWELS IN EPOXY GROUT.
2. EQUIPMENT BASES SHALL BE INSTALLED LEVEL. TOLERANCE IS 1/16".

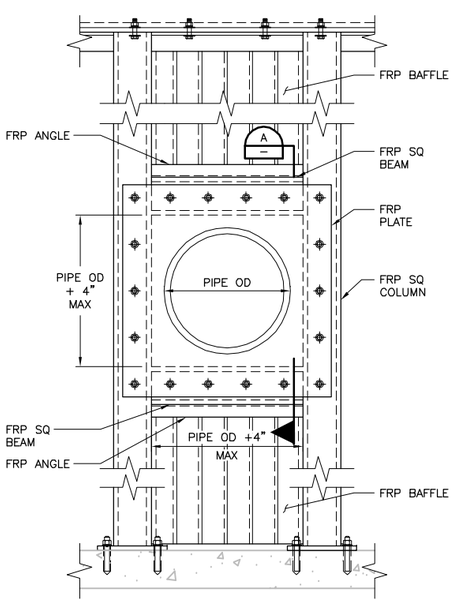

BAFFLE PIPE PENETRATION DETAIL

NTS

4

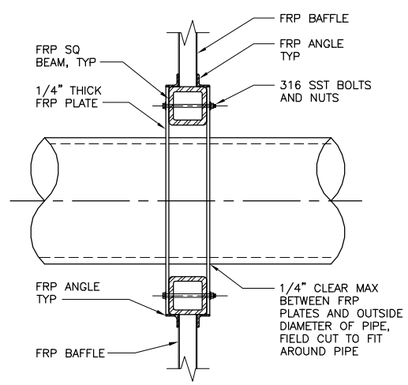

SECTION

NTS

A

NOTES:

1. CONTRACTOR TO COORDINATE PIPE PENETRATION LOCATIONS WITH BAFFLE MANUFACTURER.
2. FRP BAFFLE CONNECTIONS BETWEEN FRP SQUARE COLUMNS, BEAMS, PLATES AND ANGLES TO BE DESIGNED BY FRP BAFFLE MANUFACTURER.

BAR LENGTH ON ORIGINAL DRAWING EQUALS ONE INCH. ADJUST SCALE ACCORDINGLY

HDR Engineering, Inc.

REGISTERED PROFESSIONAL ENGINEER CRAIG A. OLSON NO. 39818 EXP. 12-31-13 CIVIL STATE OF CALIFORNIA 05-10-13

NO	DATE	REVISION	BY
	05-14-2013	ISSUED FOR BID	CAO

RUSSIAN RIVER COUNTY SANITATION DISTRICT

SCALE: AS NOTED
DATE: 5/8/13
DRAWN: RGS
REVIEWED:

BIOLOGICAL NUTRIENT REMOVAL
STANDARD MECHANICAL DETAILS 4

FILE NAME: 4M05.dwg
CONTRACT NUMBER: 70-713-7/1A
DRAWING NUMBER: M05
SHEET 24 OF 47

C:\pwworking\sac\d0407107\4M05

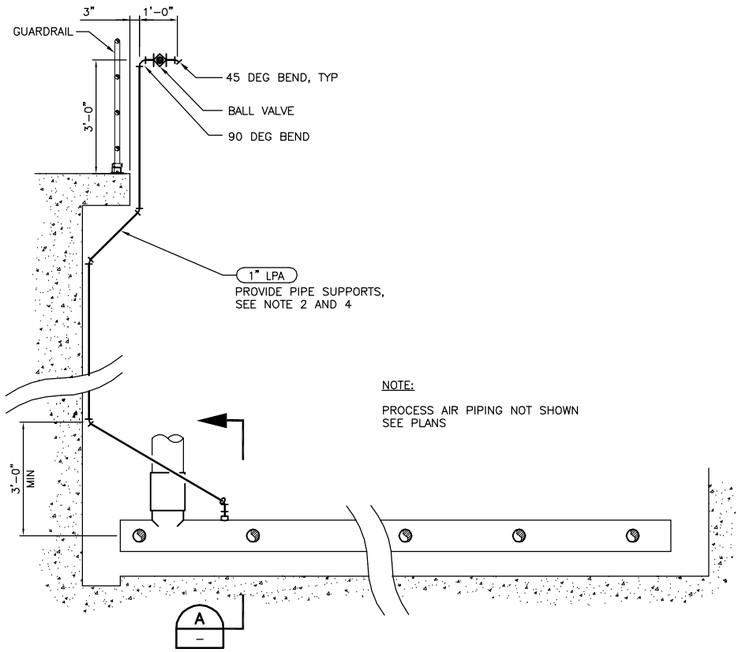

HEADER BLOWOFF PIPING DETAIL

NTS

1
–

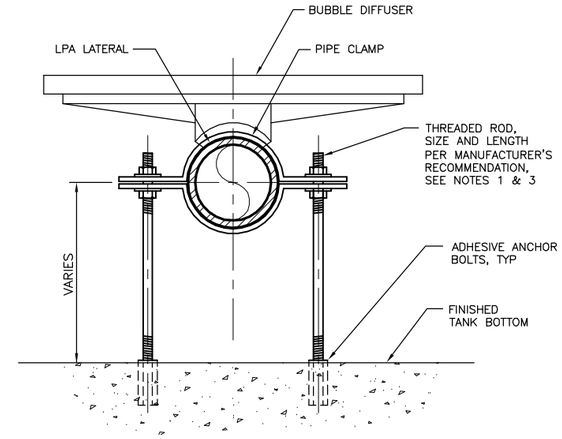

DIFFUSER DETAIL

NTS

2
–

GENERAL NOTES:

1. SEE SPECIFICATION SECTION 11088.
2. DESIGN, FURNISH AND INSTALL ALL PIPE SUPPORTS. SEE DRAWING M01–M06 (AS APPLICABLE), AND SPECIFICATION SECTIONS 15090.
3. FLOOR HEADER, DROP PIPE, DIFFUSER GRID PIPE, RELATED PIPE SUPPORTS AND CLAMPS, AND DIFFUSERS SUPPLIED BY DIFFUSER MANUFACTURER. SEE SPECIFICATION SECTION 11088.
4. PROVIDE ENTIRE 1" LPA BLOWOFF ASSEMBLY AS SHOWN.
5. FOR ZONES 1C, 1D, 2C AND 2D DESIGN AND PROVIDE AIR PIPE SUPPORTS AS SHOWN ON DRAWINGS M02 AND M03.

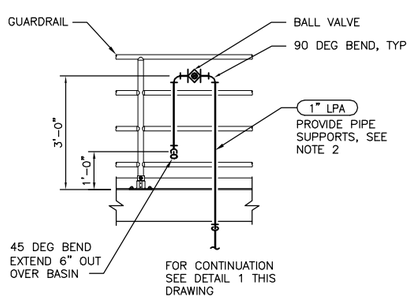

BLOWOFF PIPING DETAIL

NTS

3
–

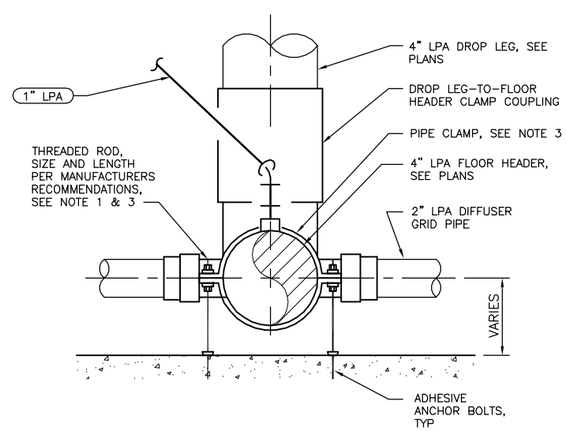

SECTION

NTS

A
–

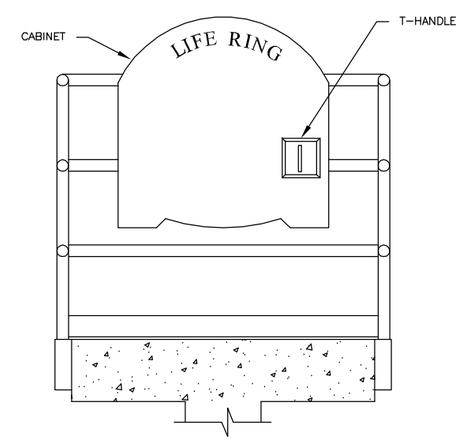

FRONT ELEVATION

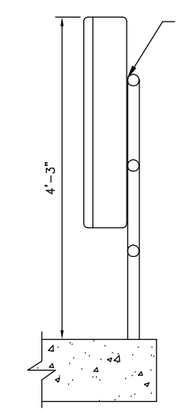

SIDE ELEVATION

MOUNT TO GUARDRAIL WITH MANUFACTURER SUPPLIED STAINLESS STEEL HARDWARE. CENTER BETWEEN POSTS WHERE POSSIBLE.

NOTES:

1. PROVIDE FIBERGLASS REINFORCED PLASTIC CABINET, ULTRAVIOLET–INHIBITING GEL COAT FINISH, SAFETY YELLOW COLOR.
2. PROVIDE RAILING MOUNTING OPTION AND STAINLESS STEEL BOLTS.
3. PROVIDE 30" TYPE IV THROWABLE RING AND 90' ROPE, UNITED STATES COAST GUARD APPROVED.
4. NON–LOCKING STAINLESS STEEL T–HANDLE ENTRY. NO GLASS. STAINLESS STEEL HINGES AND RIVETS.
5. INCLUDE "HIGH WIND LATCH" AND RUBBER WEATHER GASKET.
6. MANUFACTURER: CHEYENNE MANUFACTURING, INC. OR APPROVED EQUAL.

LIFE RING DETAIL

NTS

4
–

BAR LENGTH ON ORIGINAL DRAWING EQUALS ONE INCH. ADJUST SCALE ACCORDINGLY

HDR Engineering, Inc.

REGISTERED PROFESSIONAL ENGINEER CRAIG A. OLSON NO. 39818 EXP. 12-31-13 CIVIL STATE OF CALIFORNIA 05-10-13

NO	DATE	REVISION	BY
	05-14-2013	ISSUED FOR BID	CAO

RUSSIAN RIVER COUNTY SANITATION DISTRICT

SCALE: AS NOTED
DATE: 5/10/2013
DRAWN: RGS
REVIEWED:

BIOLOGICAL NUTRIENT REMOVAL
STANDARD MECHANICAL DETAILS 5

FILE NAME: 4M06.dwg
CONTRACT NUMBER: 70-713-7#1A
DRAWING NUMBER: M06
SHEET 25 OF 47

C:\pwworking\sac\d0407107\4M06

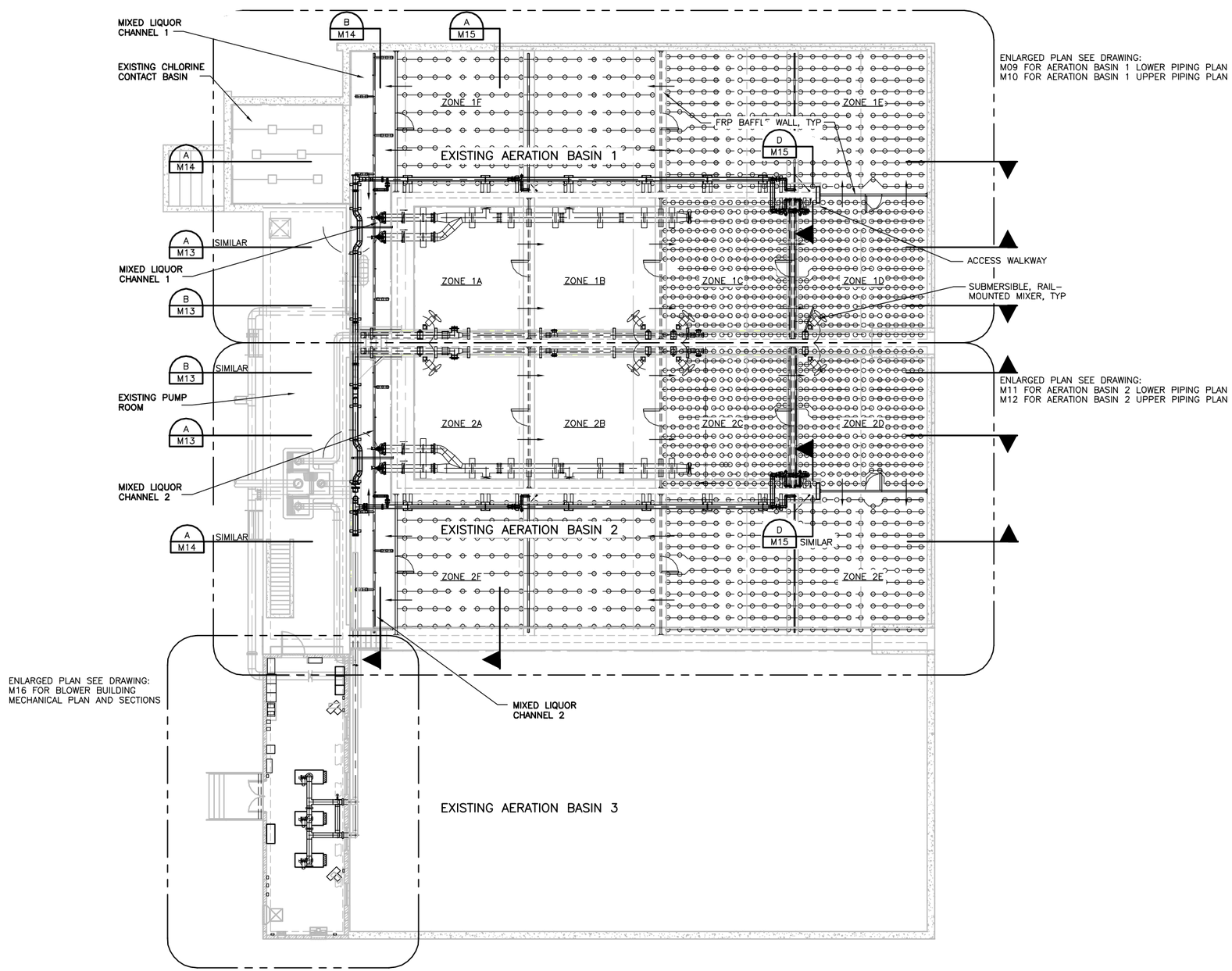

NOTE:

1. CONTRACTOR TO LIMIT SIZE OF OPENINGS IN FIBERGLASS REINFORCED PLASTIC BAFFLE WALL SYSTEM TO 1/4-INCH LARGER THAN OUTSIDE DIAMETER OF PIPE. SEE 4/M05 FOR PENETRATION DETAILS.

BAR LENGTH ON ORIGINAL DRAWING EQUALS ONE INCH. ADJUST SCALE ACCORDINGLY

HDR Engineering, Inc.

REGISTERED PROFESSIONAL ENGINEER CRAIG A. OLSON NO. 39818 EXP. 12-31-13 CIVIL STATE OF CALIFORNIA 05-10-13

NO	DATE	REVISION	BY
	05-14-2013	ISSUED FOR BID	CAO

RUSSIAN RIVER COUNTY SANITATION DISTRICT

SCALE: 3/32"=1'-0"
DATE: 5/10/2013
DRAWN: RGS
REVIEWED:

BIOLOGICAL NUTRIENT REMOVAL
AERATION BASINS OVERALL PLAN

FILE NAME: 190077_M08.dwg
CONTRACT NUMBER: 70-713-7M1A
DRAWING NUMBER: M08
SHEET 26 OF 47

C:\pwworking\sac\d0407107\190077_M08

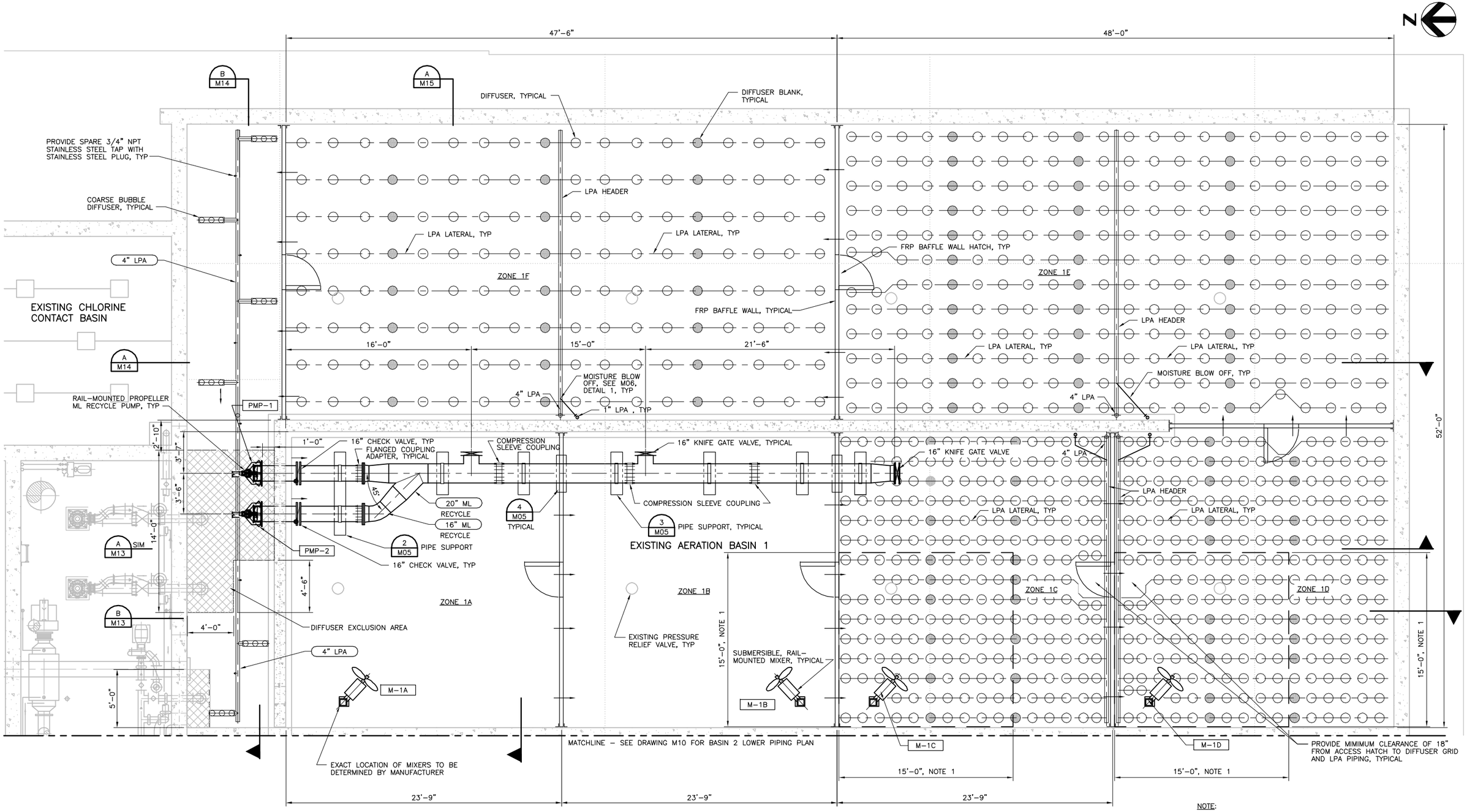

NOTE:

1. IN DESIGNATED AREA, DESIGN LPA MANIFOLD AND HEADER PIPE SUPPORTS FOR THRUST LOADS FROM OPERATING SUBMERSIBLE MIXER. MINIMUM PIPE SUPPORT SPACING IS 4'-0" ON CENTER FOR DESIGNATED AREA.

BAR LENGTH ON ORIGINAL DRAWING EQUALS ONE INCH. ADJUST SCALE ACCORDINGLY

HDR Engineering, Inc.

REGISTERED PROFESSIONAL ENGINEER CRAIG A. OLSON NO. 39819 EXP. 12-31-13 CIVIL STATE OF CALIFORNIA 05-10-13

NO	DATE	REVISION	BY
	05-14-2013	ISSUED FOR BID	CAO

RUSSIAN RIVER COUNTY SANITATION DISTRICT

SCALE: 1/4"=1'-0" DATE: 5/10/2013
DRAWN: RGS
REVIEWED:

BIOLOGICAL NUTRIENT REMOVAL

AERATION BASIN 1 LOWER PIPING PLAN

FILE NAME: 190077_M09.dwg
CONTRACT NUMBER: 70-713-7#1A
DRAWING NUMBER: M09
SHEET 27 OF 47

C:\pwworking\sac\d0407107\190077_M09

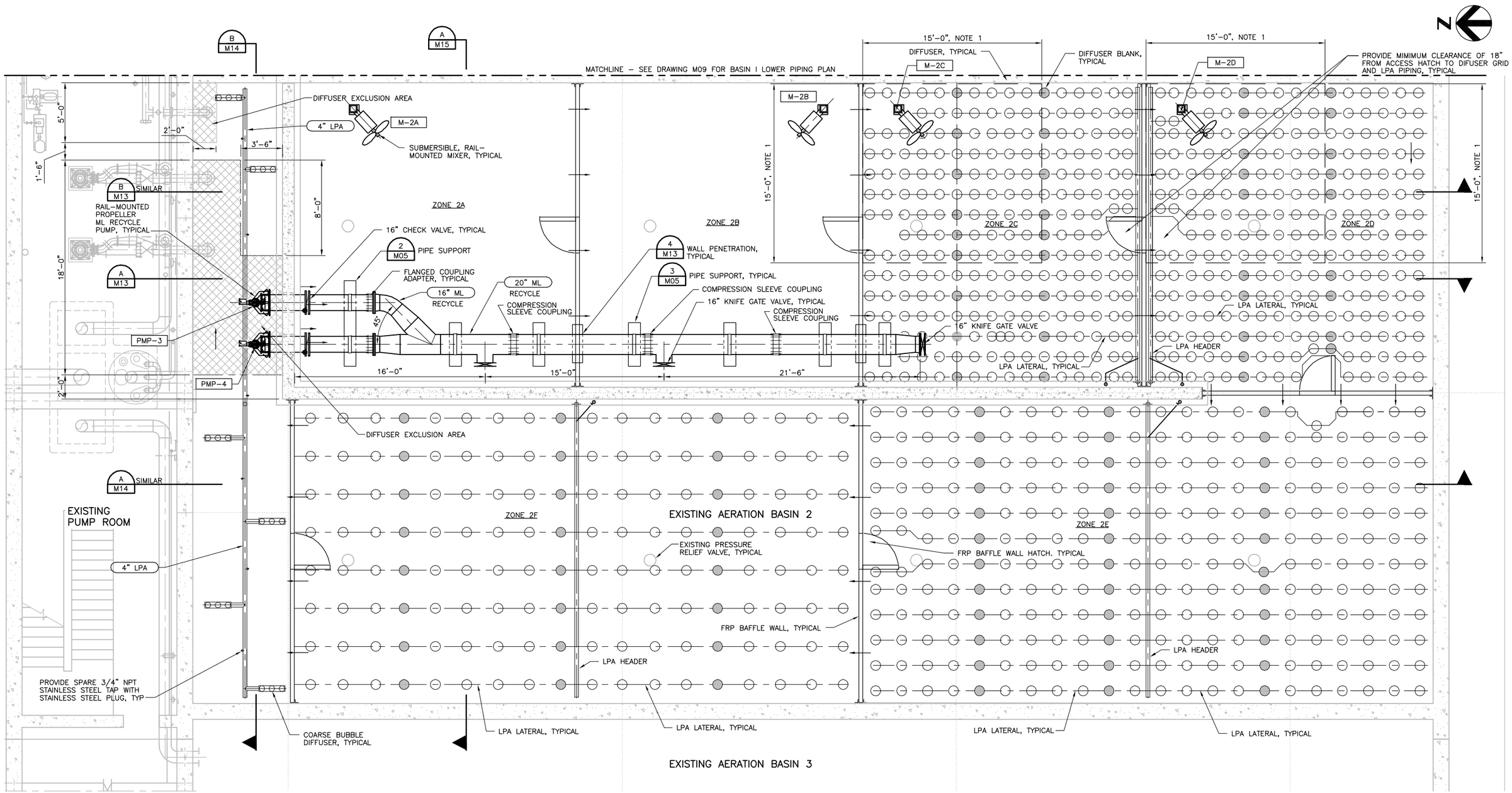

NOTES:

1. IN DESIGNATED AREA, DESIGN LPA MANIFOLD AND HEADER PIPE SUPPORTS FOR THRUST LOADS FROM OPERATING SUBMERSIBLE MIXER. MINIMUM PIPE SUPPORT SPACING IS 4'-0" ON CENTER FOR DESIGNATED AREA.

C:\pwworking\sac\d0407107\190077_M10

BAR LENGTH ON ORIGINAL DRAWING EQUALS ONE INCH. ADJUST SCALE ACCORDINGLY

HDR Engineering, Inc.

REGISTERED PROFESSIONAL ENGINEER CRAIG A. OLSON NO. 39818 EXP. 12-31-13 CIVIL STATE OF CALIFORNIA 05-08-13

NO	DATE	REVISION	BY
	05-14-2013	ISSUED FOR BID	CAO

RUSSIAN RIVER COUNTY SANITATION DISTRICT

SCALE: 1/4"=1'-0"
DATE: 5/8/2013
DRAWN: RGS
REVIEWED:

BIOLOGICAL NUTRIENT REMOVAL

AERATION BASIN 2 LOWER PIPING PLAN

FILE NAME: 190077_M10.dwg
CONTRACT NUMBER: 70-713-7#1A
DRAWING NUMBER: M10
SHEET 28 OF 47

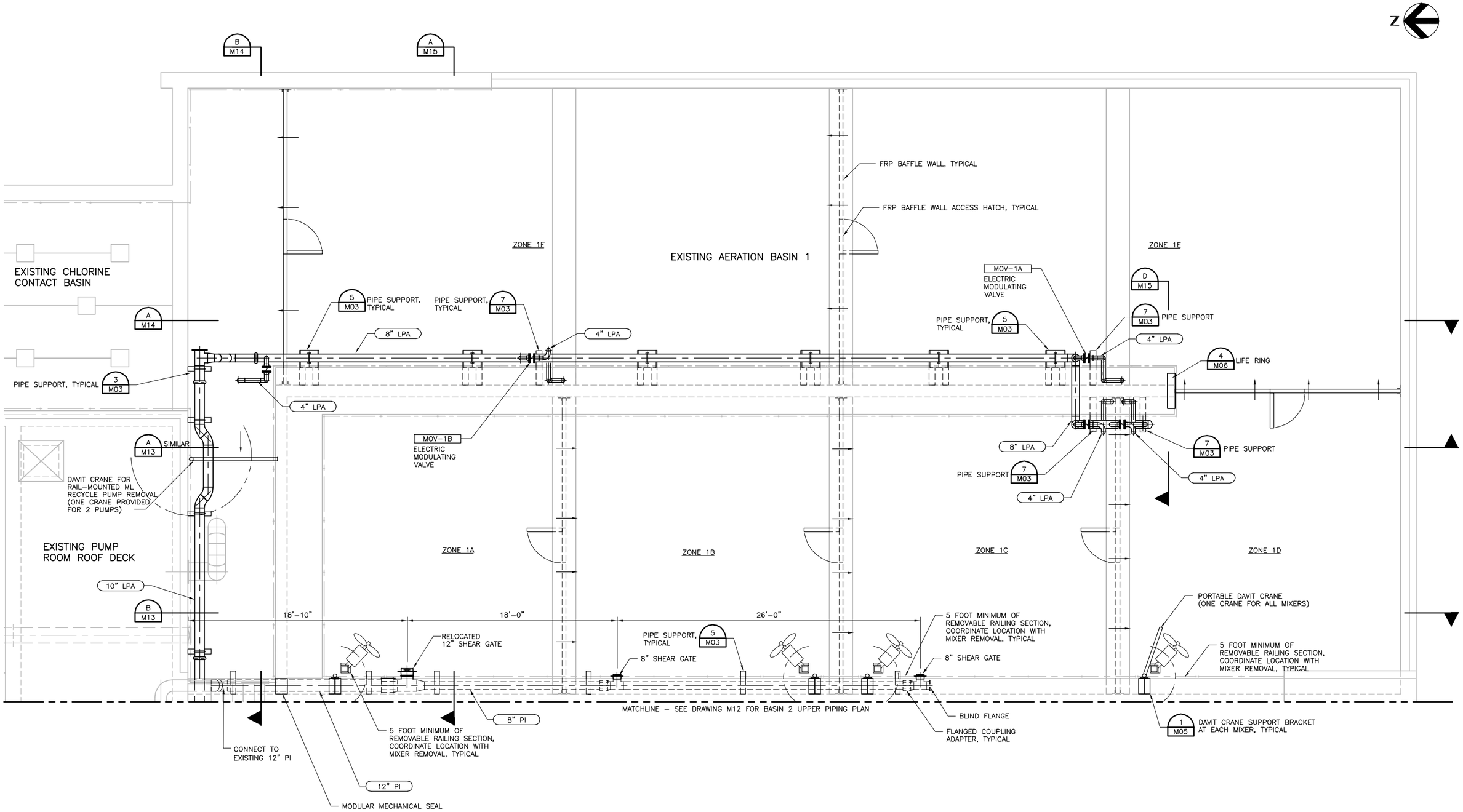

BAR LENGTH ON ORIGINAL DRAWING EQUALS ONE INCH. ADJUST SCALE ACCORDINGLY

HDR Engineering, Inc.

REGISTERED PROFESSIONAL ENGINEER CRAIG A. OLSON NO. 39819 EXP. 12-31-13 CIVIL STATE OF CALIFORNIA 05-10-13

NO	DATE	REVISION	BY
	05-14-2013	ISSUED FOR BID	CAO

RUSSIAN RIVER COUNTY SANITATION DISTRICT

SCALE: 1/4"=1'-0" DATE: 5/10/2013
DRAWN: RGS
REVIEWED:

BIOLOGICAL NUTRIENT REMOVAL

AERATION BASIN 1 UPPER PIPING PLAN

FILE NAME: 190077_M11.dwg
CONTRACT NUMBER: 70-713-7#1A
DRAWING NUMBER: M11
SHEET 29 OF 47

C:\pwworking\sac\d0407107\190077_M11

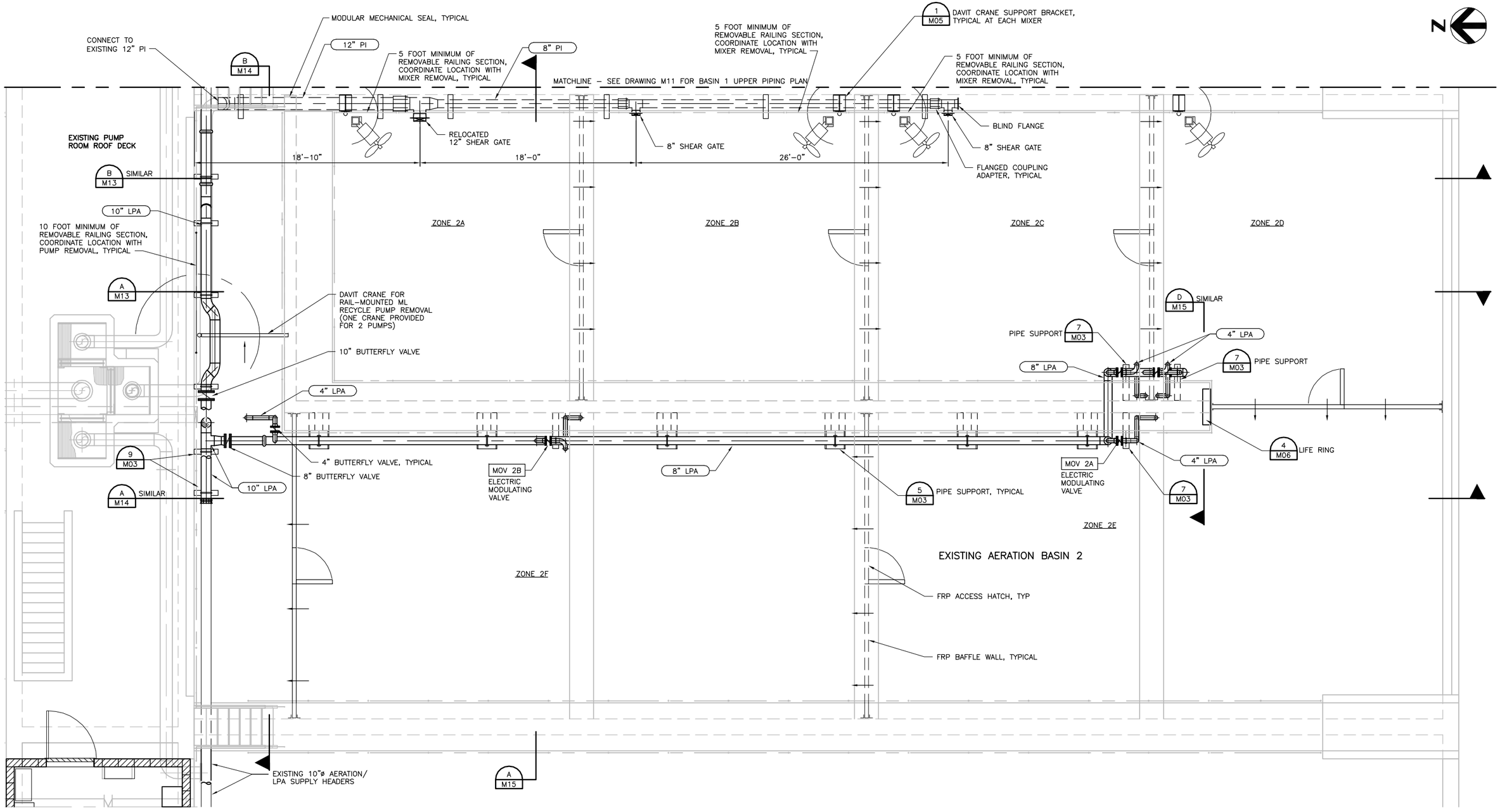

BAR LENGTH ON ORIGINAL DRAWING EQUALS ONE INCH. ADJUST SCALE ACCORDINGLY

HDR Engineering, Inc.

REGISTERED PROFESSIONAL ENGINEER CRAIG A. OLSON NO. 39818 EXP. 12-31-13 CIVIL STATE OF CALIFORNIA 05-10-13

NO	DATE	REVISION	BY
	05-14-2013	ISSUED FOR BID	CAO

RUSSIAN RIVER COUNTY SANITATION DISTRICT

SCALE: 1/4"=1'-0" DATE: 5/10/2013
DRAWN:
REVIEWED:

BIOLOGICAL NUTRIENT REMOVAL

AERATION BASIN 2 UPPER PIPING PLAN

FILE NAME: 190077_M12.dwg
CONTRACT NUMBER: 70-713-7#1A
DRAWING NUMBER: M12
SHEET 30 OF 47

C:\pwworking\sac\d0407107\190077_M12

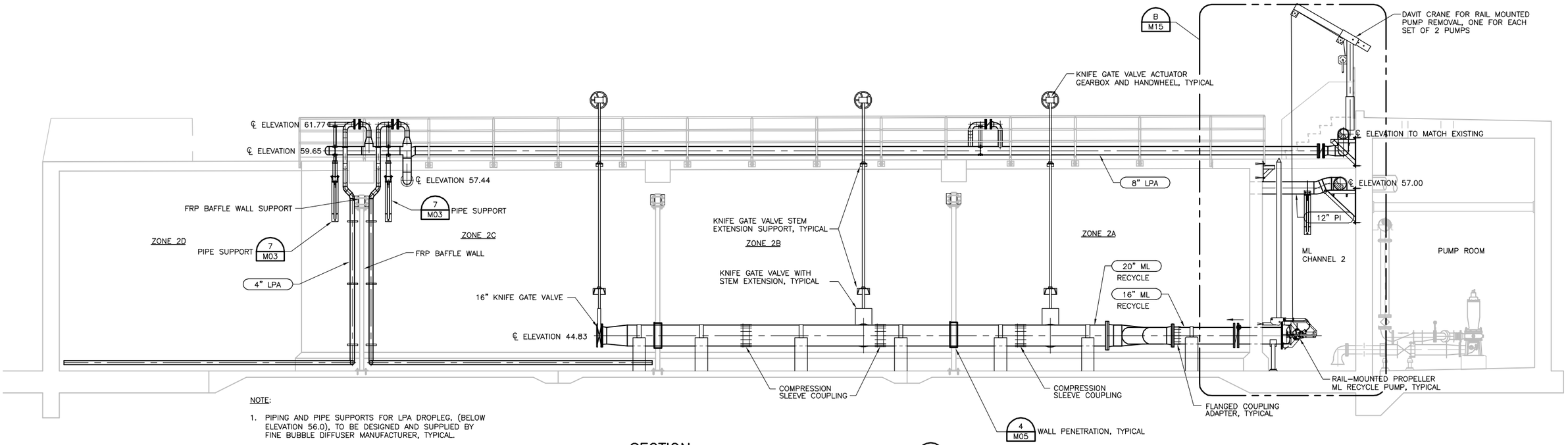

NOTE:

1. PIPING AND PIPE SUPPORTS FOR LPA DROPLEG, (BELOW ELEVATION 56.0), TO BE DESIGNED AND SUPPLIED BY FINE BUBBLE DIFFUSER MANUFACTURER, TYPICAL.

SECTION A M08
1/4" = 1'-0"

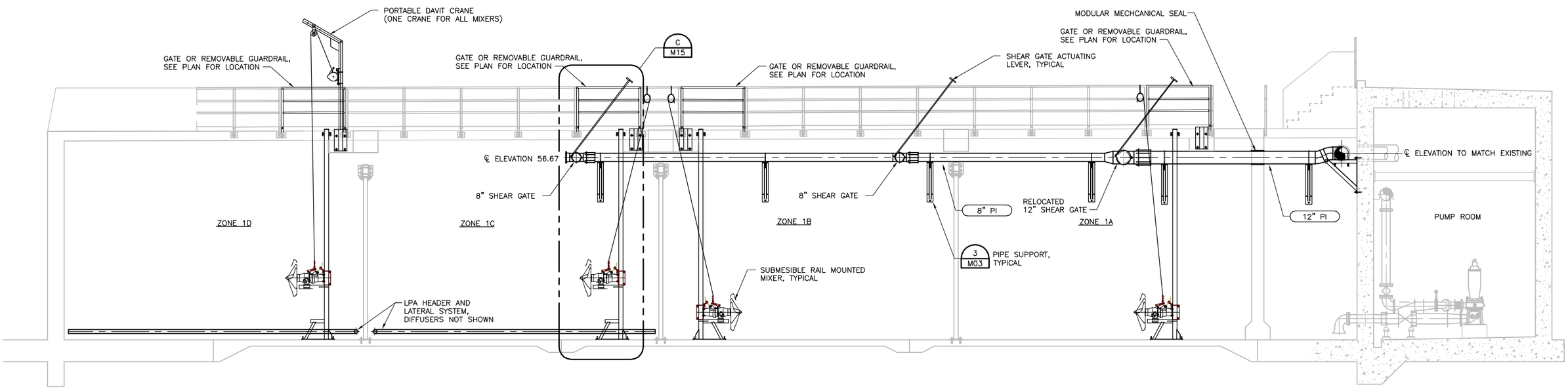

SECTION B M08
1/4" = 1'-0"

BAR LENGTH ON ORIGINAL DRAWING EQUALS ONE INCH. ADJUST SCALE ACCORDINGLY

HDR Engineering, Inc.

REGISTERED PROFESSIONAL ENGINEER CRAIG A. OLSON NO. 39818 EXP. 12-31-13 CIVIL STATE OF CALIFORNIA 05-10-13

NO	DATE	REVISION	BY
	05-14-2013	ISSUED FOR BID	CAO

RUSSIAN RIVER COUNTY SANITATION DISTRICT

SCALE: 1/4"=1'-0"
DATE: 5/10/2013
DRAWN: RGS
REVIEWED:

BIOLOGICAL NUTRIENT REMOVAL
AERATION BASINS SECTIONS 1

FILE NAME: 190077_M13.dwg
CONTRACT NUMBER: 70-713-7#1A
DRAWING NUMBER: M13
SHEET 31 OF 47

C:\pwworking\sec\d0407107\190077_M13

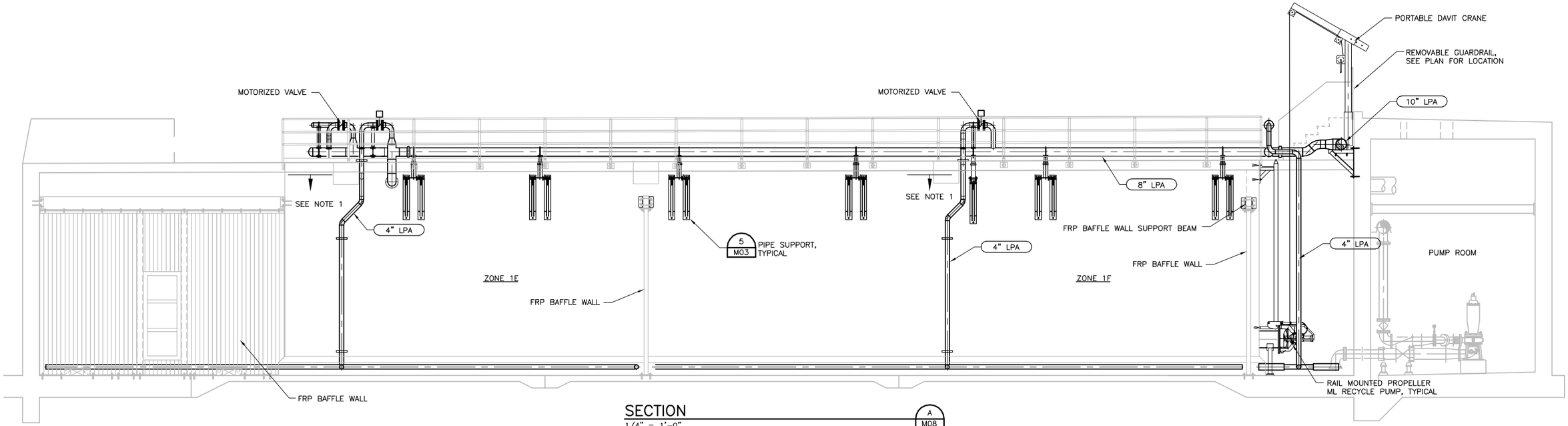

SECTION A M08
1/4" = 1'-0"

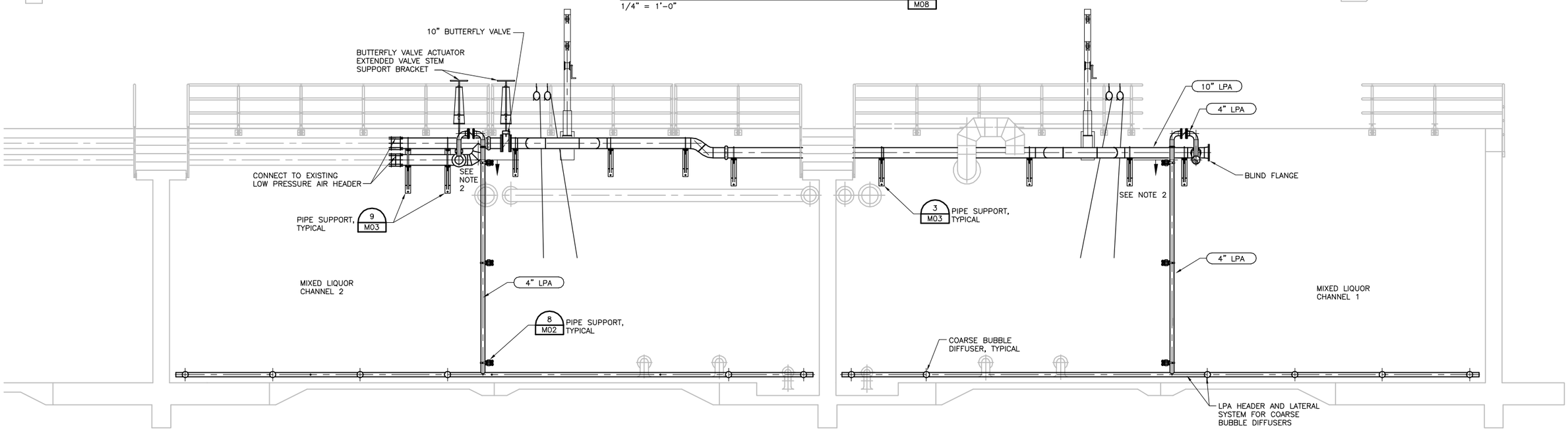

SECTION B M08
1/4" = 1'-0"

NOTES:

1. PIPING AND PIPE SUPPORTS FOR LPA DROPLEG, (BELOW ELEVATION 56.0), TO BE DESIGNED AND SUPPLIED BY FINE BUBBLE DIFFUSER MANUFACTURER, TYPICAL.
2. PIPING AND PIPE SUPPORTS, (BELOW ELEVATION 56.0), TO BE DESIGNED AND SUPPLIED BY COARSE BUBBLE DIFFUSER MANUFACTURER.

C:\pwworking\sac\d0407107\190077_M14

BAR LENGTH ON ORIGINAL DRAWING EQUALS ONE INCH. ADJUST SCALE ACCORDINGLY

HDR Engineering, Inc.

REGISTERED PROFESSIONAL ENGINEER CRAIG A. OLSON NO. 39818 EXP. 12-31-13 CIVIL STATE OF CALIFORNIA 05-10-13

NO	DATE	REVISION	BY
	05-14-2013	ISSUED FOR BID	CAO

RUSSIAN RIVER COUNTY SANITATION DISTRICT

SCALE: 1/4"=1'-0" DATE: 5/10/2013
DRAWN: RGS
REVIEWED:

BIOLOGICAL NUTRIENT REMOVAL
AERATION BASINS SECTIONS 2

FILE NAME: 190077_M14.dwg
CONTRACT NUMBER: 70-713-7#1A
DRAWING NUMBER: M14
SHEET 32 OF 47

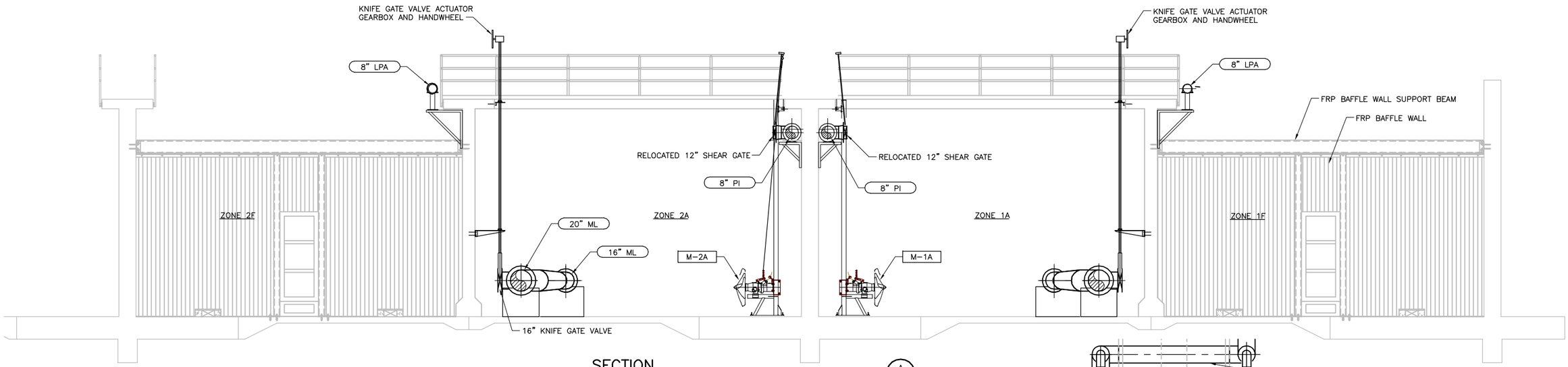

SECTION
1/4" = 1'-0"
A M08

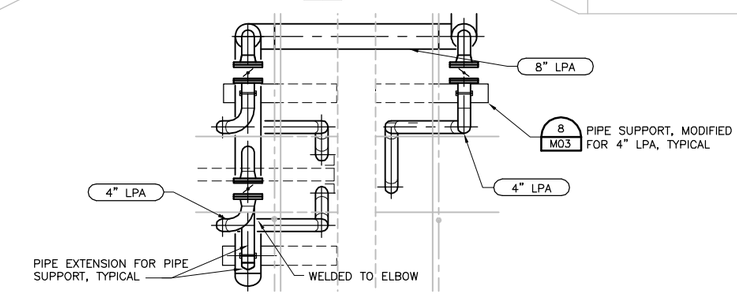

PLAN

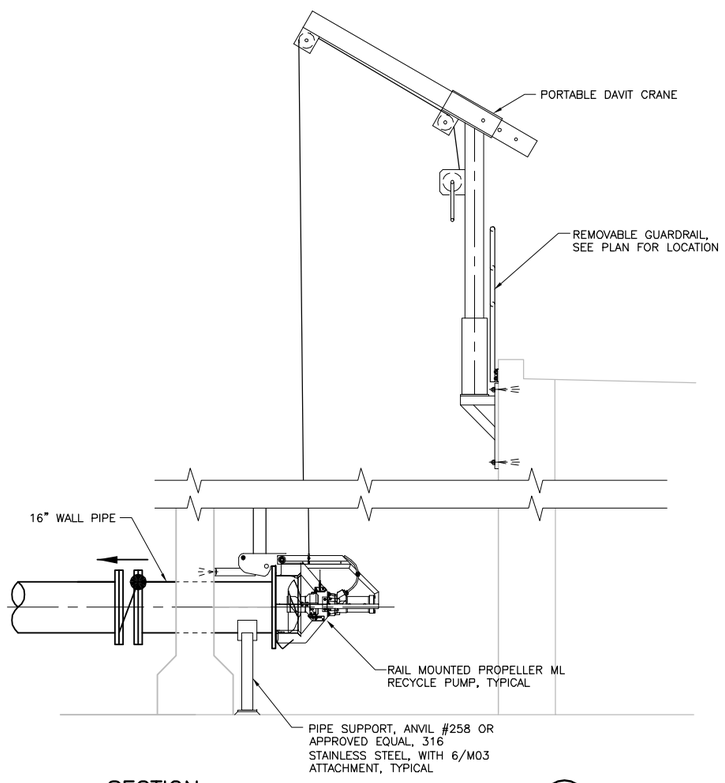

SECTION
1/2" = 1'-0"
B M13

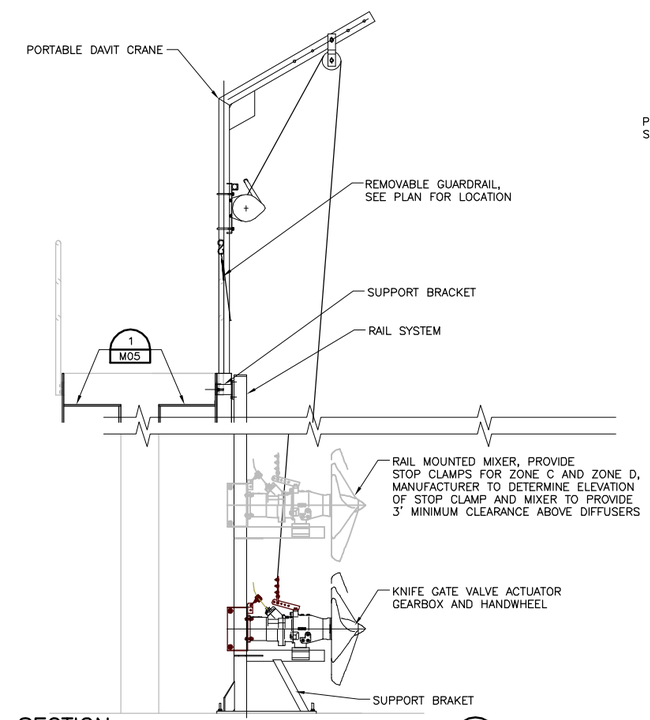

SECTION
1/2" = 1'-0"
C M13

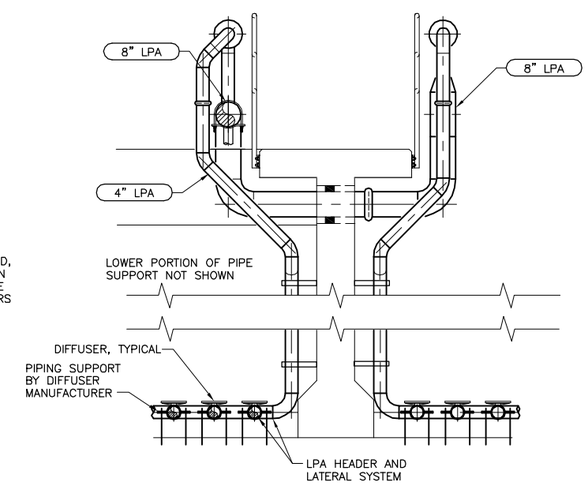

SECTION
1/2" = 1'-0"
D M08

BAR LENGTH ON ORIGINAL DRAWING EQUALS ONE INCH. ADJUST SCALE ACCORDINGLY

HDR Engineering, Inc.

REGISTERED PROFESSIONAL ENGINEER CRAIG A. GLSON NO. 39819 EXP. 12-31-13 CIVIL STATE OF CALIFORNIA 05-10-13

NO	DATE	REVISION	BY
	05-14-2013	ISSUED FOR BID	CAO

RUSSIAN RIVER COUNTY SANITATION DISTRICT

SCALE: AS NOTED
DATE: 5/10/2013
DRAWN: RGS
REVIEWED:

BIOLOGICAL NUTRIENT REMOVAL
AERATION BASIN SECTIONS AND DETAILS

FILE NAME: 190077_M15.dwg
CONTRACT NUMBER: 70-713-7#1A
DRAWING NUMBER: M15
SHEET 33 OF 47

C:\pwworking\sac\d0407107\190077_M15

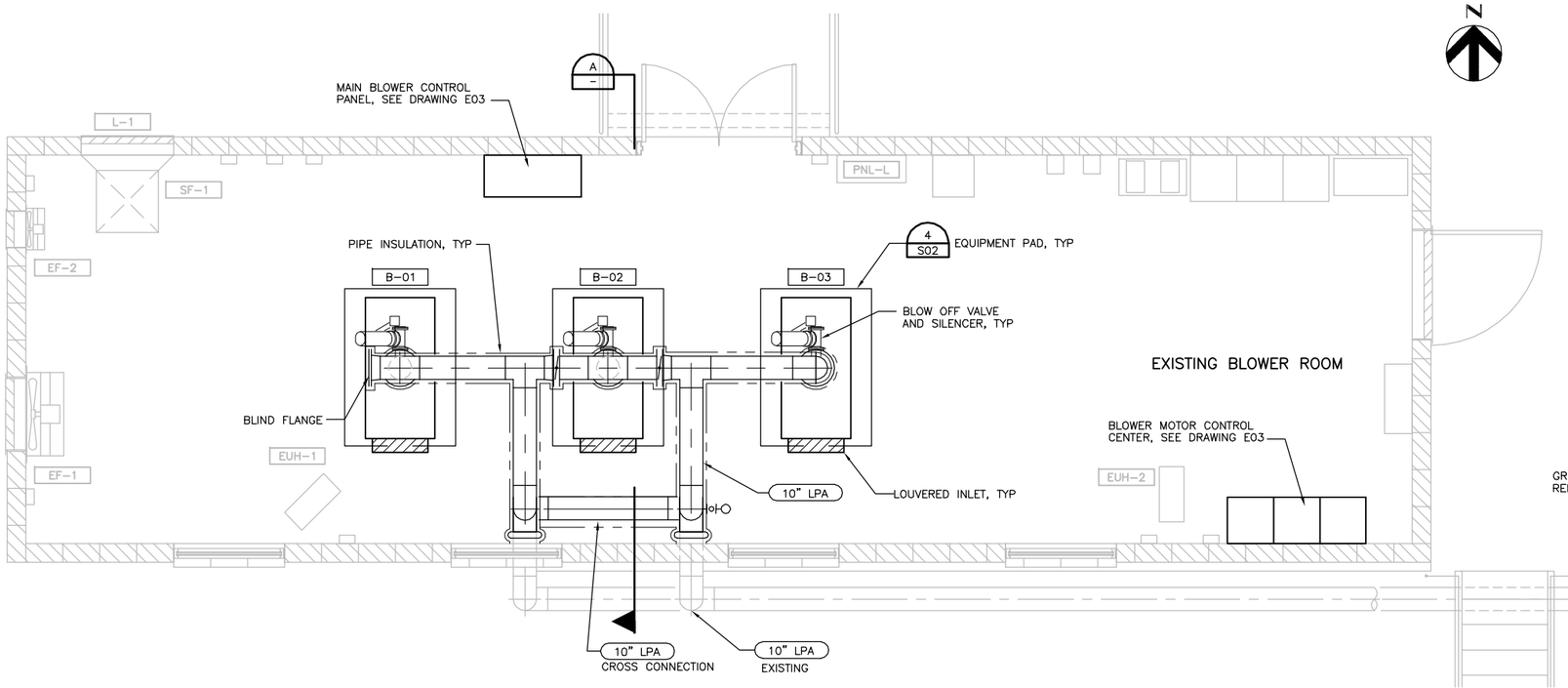

BLOWER BUILDING – PLAN

3/8"=1'-0"

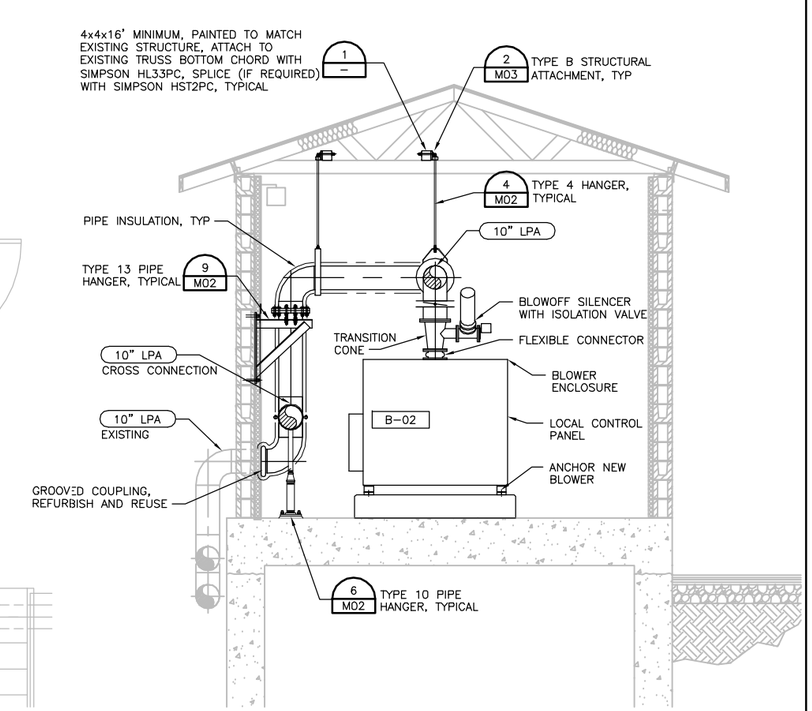

BLOWER BUILDING – SECTION

3/8" = 1'-0"

A
–

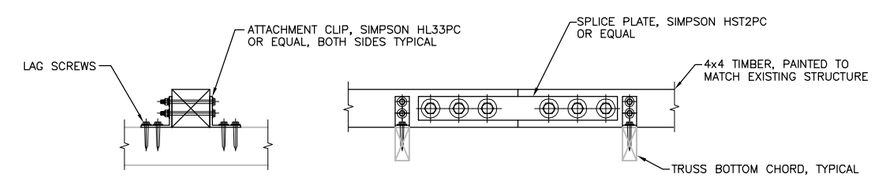

DETAIL

1 1/2 = 1'-0"

1
–

BAR LENGTH ON ORIGINAL DRAWING EQUALS ONE INCH. ADJUST SCALE ACCORDINGLY

HDR Engineering, Inc.

REGISTERED PROFESSIONAL ENGINEER CRAIG A. OLSON NO. 39818 EXP. 12-31-13 CIVIL STATE OF CALIFORNIA 05-10-13

NO	DATE	REVISION	BY
	05-14-2013	ISSUED FOR BID	CAO

RUSSIAN RIVER COUNTY SANITATION DISTRICT

SCALE: 3/8" = 1'-0"
DATE: 5/10/2013
DRAWN:
REVIEWED:

BIOLOGICAL NUTRIENT REMOVAL
BLOWER BUILDING
MECHANICAL PLAN AND SECTIONS

FILE NAME: 190077_M16.dwg
CONTRACT NUMBER: 70-713-7#1A
DRAWING NUMBER: M16
SHEET 34 OF 47

C:\pwworking\sac\d0407107\190077_M16

X 20A 3P OR X 100AF 80AT 3P — LOW – VOLTAGE CIRCUIT BREAKER (CB). RATINGS AND NO. OF POLES AS SHOWN. WHEN SPECIFIC TYPE IS REQUIRED, X INDICATES TYPE.

TYPES:
MCCB – MOLDED CASE
ICCB – INSULATED CASE
LVP – LOW – VOLTAGE POWER
MCP – MOTOR CIRCUIT PROTECTOR (RATING PER CONNECTED LOAD)

CB — SEPARATELY MOUNTED CIRCUIT BREAKER; SEE ELECTRICAL ONE – LINE DIAGRAM OR SCHEDULE FOR DESCRIPTION

GFP — GROUND FAULT PROTECTION

52 — MEDIUM – VOLTAGE CIRCUIT BREAKER

FUSE, SIZE, AND NUMBER OF FUSES AS NOTED

FUSED CUTOUT, CURRENT RATING, FUSE SIZE, AND NUMBER OF POLES AS NOTED

FUSIBLE SWITCH, CURRENT RATING, FUSE SIZE, AND QUANTITY AS NOTED

NON–FUSED SWITCH, CURRENT RATING, AND NUMBER OF POLES AS NOTED

DISCONNECT OR DRAWOUT CONNECTION

A C B & A C B — MAGNETIC MOTOR STARTER AND SEPARATELY MOUNTED COMBINATION MAGNETIC MOTOR STARTER

D C & D C — MOTOR CONTROLLER AND SEPARATELY MOUNTED MOTOR CONTROLLER WITH SHORT CIRCUIT PROTECTION AND DISCONNECT

MOTOR STARTER AND CONTROLLER SUBSCRIPTS:

A – MAGNETIC STARTER NEMA SIZE

B – STARTER TYPE
NONE – FULL VOLTAGE NON–REVERSING (FVNR)
FVR – FULL VOLTAGE REVERSING
2S – TWO SPEED
RVAT – REDUCED VOLTAGE AUTO TRANSFORMER

C – CONTROL DIAGRAM OR CONTROLS SCHEDULE NUMBER (IF REQUIRED)

D – CONTROLLER TYPE
VFD – VARIABLE FREQUENCY DRIVE
SS – SOLID STATE

SEPARATELY MOUNTED COMBINATION MOTOR STARTER OR CONTROLLER; SEE ELECTRICAL ONE – LINE DIAGRAM OR SCHEDULE FOR DESCRIPTION

THERMAL OVERLOAD ELEMENT

OL — THERMAL OVERLOAD RELAY CONTACT

DISCONNECT OR SAFETY SWITCH, 30A, 3P, NON–FUSED UNLESS OTHERWISE NOTED

7 1/2 OR HP — MOTOR WITH DESIGN HORSEPOWER (WHEN INDICATED)

G — GENERATOR

ATS — TRANSFER SWITCH, CURRENT RATING, AND NUMBER OF POLES AS NOTED

ATS – AUTOMATIC
MTS – MANUAL

TRANSFORMER

Δ 3–PHASE, 3–WIRE DELTA CONNECTION

Y 3–PHASE, 4–WIRE GROUNDED WYE CONNECTION

LP100 208/120V 3ø, 4W — SWITCHBOARD OR PANELBOARD; NAME, VOLTAGE, PHASE, NUMBER OF WIRES WHEN INDICATED

100 KVA — NON–MOTOR LOAD WITH DESIGN KVA, KW, OR AMP

CPT — CONTROL POWER TRANSFORMER (CPT)

VOLTAGE TRANSFORMER (VT OR PT)

CURRENT TRANSFORMER (CT)

WH — UTILITY WATT–HOUR METER PER UTILITY REQUIREMENTS

DMP — DIGITAL METERING PACKAGE

RTM — RUN TIME METER

GROUND

LIGHTNING ARRESTER

SPD — LOW VOLTAGE SURGE PROTECTIVE DEVICE

ELECTRICAL CONNECTION

OR OR — NO ELECTRICAL CONNECTION

SV OR — SOLENOID VALVE

X Y — CONTROL/RELAY COIL; X INDICATES TYPE, Y INDICATES LOOP NO. WHEN USED

TYPES:
CR – CONTROL RELAY
DP – DEFINITE PURPOSE RELAY
LC – LIGHTING CONTACTOR
M – MOTOR STARTER
PC – PHOTO CELL
TC – TIME CLOCK
TR – TIMING RELAY

NORMALLY OPEN TIME DELAY RELAY CONTACT WITH TIME DELAY ON CLOSING AFTER COIL IS ENERGIZED

NORMALLY CLOSED TIME DELAY RELAY CONTACT WITH TIME DELAY ON OPENING AFTER COIL IS ENERGIZED

NORMALLY OPEN TIME DELAY RELAY CONTACT WITH TIME DELAY ON OPENING AFTER COIL IS DE–ENERGIZED

NORMALLY CLOSED TIME DELAY RELAY CONTACT WITH TIME DELAY ON CLOSING AFTER COIL IS DE–ENERGIZED

NORMALLY OPEN TEMPERATURE SWITCH; CLOSE ON RISING TEMPERATURE

NORMALLY CLOSED TEMPERATURE SWITCH; OPEN ON RISING TEMPERATURE

NORMALLY OPEN FLOW SWITCH; CLOSE ON INCREASING FLOW

NORMALLY CLOSED FLOW SWITCH; OPEN ON INCREASING FLOW

NORMALLY OPEN LEVEL SWITCH, CLOSE ON RISING LEVEL

NORMALLY CLOSED LEVEL SWITCH, OPEN ON RISING LEVEL

NORMALLY OPEN PRESSURE SWITCH, CLOSE ON INCREASING PRESSURE

NORMALLY CLOSED PRESSURE SWITCH, OPEN ON INCREASING PRESSURE

NORMALLY OPEN LIMIT SWITCH, CLOSE ON REACHING LIMIT

NORMALLY CLOSED LIMIT SWITCH, OPEN ON REACHING LIMIT

NORMALLY OPEN CONTACT (N.O.)

NORMALLY CLOSED CONTACT (N.C.)

FIELD WIRING EXTERNAL TO CONTROL PANEL

X — INTERLOCK; X INDICATES TYPE

TYPES:
E – ELECTRICAL
M – MECHANICAL
K – KEY

OFF HAND AUTO XOO OOX — 3 POSITION SELECTOR SWITCH, MAINTAINED CONTACTS; UNLESS OTHERWISE NOTED, 2–POSITION SIMILAR

NORMALLY OPEN PUSHBUTTON, MOMENTARY CONTACT UNLESS OTHERWISE NOTED

NORMALLY CLOSED PUSHBUTTON, MOMENTARY CONTACT UNLESS OTHERWISE NOTED

X — INDICATING LIGHT, X INDICATES LENS COLOR

X — PUSH TO TEST INDICATING LIGHT, X INDICATES LENS COLOR

LENS COLORS:
R – RED
G – GREEN
B – BLUE
Y – YELLOW
W – WHITE
A – AMBER

T — TRANSFORMER

CS — CONTROL STATION

SS — SELECTOR SWITCH

PB — PUSHBUTTON

IC — INSTRUMENTATION/CONTROL DEVICE

CONTROL PANEL INTEGRAL OR PROVIDED WITH ASSOCIATED EQUIPMENT

CONTROL PANEL WITH DISCONNECT SWITCH INTEGRAL OR PROVIDED WITH ASSOCIATED EQUIPMENT

J — JUNCTION OR PULL BOX

PANELBOARD (250V TO 600V)

PANELBOARD (LESS THAN 250V)

ELECTRICAL EQUIPMENT ENCLOSURE: SWITCHBOARD, MOTOR CONTROL CENTER, CONTROL PANEL, OR OTHER EQUIPMENT AS INDICATED

PC — PHOTOCELL

z X Y — CEILING/PENDANT–MOUNTED LUMINAIRE – HID, COMPACT FLUORESCENT, OR INCANDESCENT

z X Y — WALL–MOUNTED LUMINAIRE – HID, COMPACT FLUORESCENT, OR INCANDESCENT

z X Y — CEILING/PENDANT–MOUNTED FLUORESCENT FIXTURE

z X Y — WALL–MOUNTED FLUORESCENT FIXTURE

z X Y — CEILING/PENDANT–MOUNTED FLUORESCENT FIXTURE NORMAL/EMERGENCY

z X Y — WALL–MOUNTED FLUORESCENT FIXTURE NORMAL/EMERGENCY

X Y — EMERGENCY LIGHT FIXTURE, 2 ATTACHED HEADS AS SHOWN

X Y — EMERGENCY LIGHT, REMOTE MOUNTED HEAD

X Y X Y — DOUBLE–FACED CEILING OR WALL–MOUNTED EXIT LIGHT; DIRECTIONAL ARROWS (IF REQUIRED) AS INDICATED ON PLANS

X Y X Y — SINGLE–FACED CEILING OR WALL–MOUNTED EXIT LIGHT; DIRECTIONAL ARROWS (IF REQUIRED) AS INDICATED ON PLANS

X Y — AREA OR ROADWAY LIGHT – POLE–MOUNTED

LIGHTING FIXTURE SUBSCRIPTS:
X – INDICATES FIXTURE TYPE PER LIGHTING FIXTURE SCHEDULE
Y – INDICATES CIRCUIT NUMBER FROM PANELBOARD
z – INDICATES CONTROLLING SWITCH (IF REQUIRED)

$ Y X — TOGGLE SWITCH

SUBSCRIPTS:
X – INDICATES TYPE
NONE – SINGLE POLE
3 – THREE–WAY
4 – FOUR–WAY
HP – TOGGLE SWITCH, HORSEPOWER RATED
K – KEY SWITCH
TE – MANUAL MOTOR STARTER W/ THERMAL ELEMENT
P – PILOT LIGHT
L – LIGHTED HANDLE
Y – INDICATES CONTROLLING SWITCH (IF REQUIRED)

SPECIAL–PURPOSE RECEPTACLE AS DEFINED ON PLANS

PLUG–IN RECEPTACLE STRIP, QUANTITY AND SPACING OF RECEPTACLES AS NOTED OR SPECIFIED

TELECOMMUNICATIONS OUTLET JUNCTION BOX

X Y — QUAD–DUPLEX RECEPTACLE, TWO NEMA 5–20R UNDER COMMON COVER PLATE

X Y — DUPLEX RECEPTACLE, NEMA 5–20R

X Y — SIMPLEX RECEPTACLE, NEMA 5–20R

SUBSCRIPTS:
X – INDICATES TYPE
GFCI – GROUND FAULT CIRCUIT INTERRUPTER
Y – INDICATES CIRCUIT NUMBER FROM PANELBOARD

CONDUIT TURNING UP

CONDUIT TURNING DOWN

HOME RUN TO PANEL, 2 #12, 1 #12G IN 3/4"C UNLESS OTHERWISE NOTED

CIRCUIT RUN BETWEEN DEVICES EXPOSED IN NON–ARCHITECTURALLY FINISHED AREAS; CONCEALED IN ARCHITECTURALLY FINISHED AREAS. CONDUIT AND CONDUCTOR SIZES SHALL BE THE SAME AS THE HOMERUN FOR THE CIRCUIT.

CONDUIT RUN BETWEEN DEVICES CONCEALED IN NON–ARCHITECTURALLY FINISHED AREAS OR UNDER FLOOR SLAB. CONDUIT AND CONDUCTOR SIZES SHALL BE THE SAME AS THE HOMERUN FOR THE CIRCUIT.

CIRCUIT HASH MARKS (WHEN INDICATED); LONG, SHORT, SINGLE DOT, AND DOUBLE DOT REPRESENT PHASE, NEUTRAL, EQUIPMENT GROUND, AND ISOLATED EQUIPMENT GROUND, RESPECTIVELY. #12 IN 3/4" CONDUIT UNLESS OTHERWISE INDICATED.

CIRCUIT CONTINUATION

CONDUIT STUBBED OUT AND CAPPED

XXX — CONDUIT TAG OR CIRCUIT NUMBER – WIRE AND CONDUIT SIZE AS SPECIFIED IN CIRCUIT SCHEDULE ON THE SHEETS

GROUND CABLE

GROUND ROD

GENERAL NOTES:

1. THIS IS A STANDARD ELECTRICAL SYMBOLOGY DRAWING. NOT ALL SYMBOLS MAY BE USED ON THIS PROJECT.
2. SCREENING OR SHADING OF WORK IS USED TO INDICATE EXISTING COMPONENTS OR TO DE–EMPHASIZE PROPOSED IMPROVEMENT TO HIGHLIGHT SELECTED TRADE WORK. REFER TO CONTEXT OF EACH DRAWING FOR USAGE.
3. SEE P&ID LEGEND DRAWING FOR PROJECT–SPECIFIC EQUIPMENT SYMBOLS, EQUIPMENT ABBREVIATIONS, AND PIPING SYSTEM ABBREVIATIONS.

BAR LENGTH ON ORIGINAL DRAWING EQUALS ONE INCH. ADJUST SCALE ACCORDINGLY

HDR Engineering, Inc.

REGISTERED PROFESSIONAL ENGINEER WILLIAM F. ETTLICH NO. 7625 EXP. 06/30/14 STATE OF CALIFORNIA 05-14-13

NO	DATE	REVISION	BY
	05-14-2013	ISSUED FOR BID	CAO

RUSSIAN RIVER COUNTY SANITATION DISTRICT

SCALE: 1/4"=1'–0" | DATE: 5/8/2013
DRAWN: RJG
REVIEWED:

BIOLOGICAL NUTRIENT REMOVAL
ELECTRICAL LEGEND

FILE NAME: 190077_E01.dwg
CONTRACT NUMBER: 70-713-7#1A
DRAWING NUMBER: E01
SHEET 35 OF 47

C:\pwworking\sac\d0407107\190077_E01

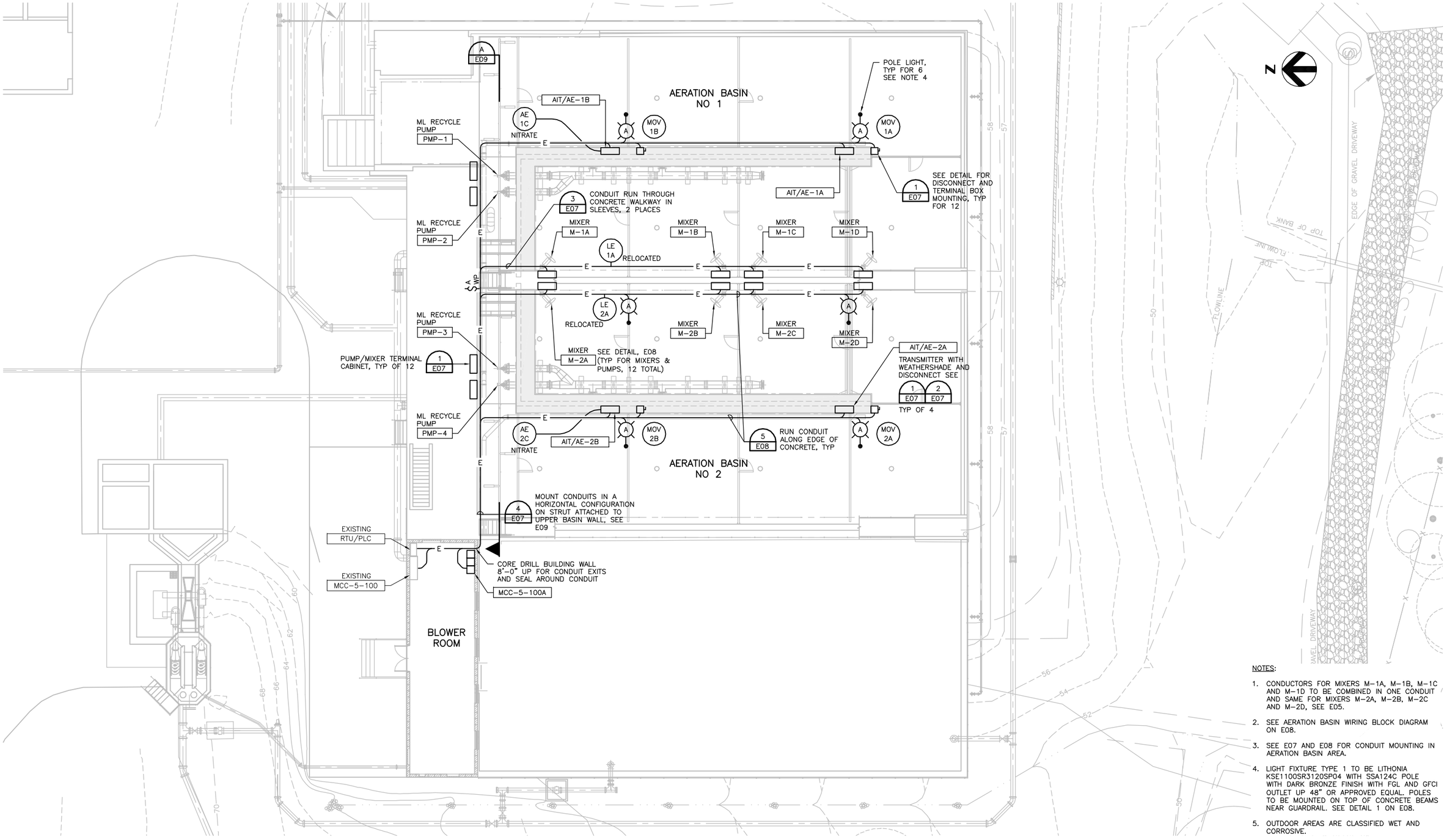

NOTES:

1. CONDUCTORS FOR MIXERS M-1A, M-1B, M-1C AND M-1D TO BE COMBINED IN ONE CONDUIT AND SAME FOR MIXERS M-2A, M-2B, M-2C AND M-2D, SEE E05.
2. SEE AERATION BASIN WIRING BLOCK DIAGRAM ON E08.
3. SEE E07 AND E08 FOR CONDUIT MOUNTING IN AERATION BASIN AREA.
4. LIGHT FIXTURE TYPE 1 TO BE LITHONIA KSE1100SR3120SP04 WITH SSA124C POLE WITH DARK BRONZE FINISH WITH FGL AND GFCI OUTLET UP 48" OR APPROVED EQUAL. POLES TO BE MOUNTED ON TOP OF CONCRETE BEAMS NEAR GUARDRAIL. SEE DETAIL 1 ON E08.
5. OUTDOOR AREAS ARE CLASSIFIED WET AND CORROSIVE.

C:\pwworking\sac\d0407107\190077_E02

BAR LENGTH ON ORIGINAL DRAWING EQUALS ONE INCH. ADJUST SCALE ACCORDINGLY

HDR Engineering, Inc.

REGISTERED PROFESSIONAL ENGINEER WILLIAM F. ETTLICH NO. 7625 EXP. 09/30/14 STATE OF CALIFORNIA 05-14-13

NO	DATE	REVISION	BY
	05-14-2013	ISSUED FOR BID	CAO

RUSSIAN RIVER COUNTY SANITATION DISTRICT

SCALE: 1"=40'
DATE: 5/10/2013
DRAWN: RJG
REVIEWED:

BIOLOGICAL NUTRIENT REMOVAL

AERATION BASINS ELECTRICAL PLAN

FILE NAME: 190077_E02.dwg
CONTRACT NUMBER: 70-713-7/1A
DRAWING NUMBER: E02
SHEET 36 OF 47

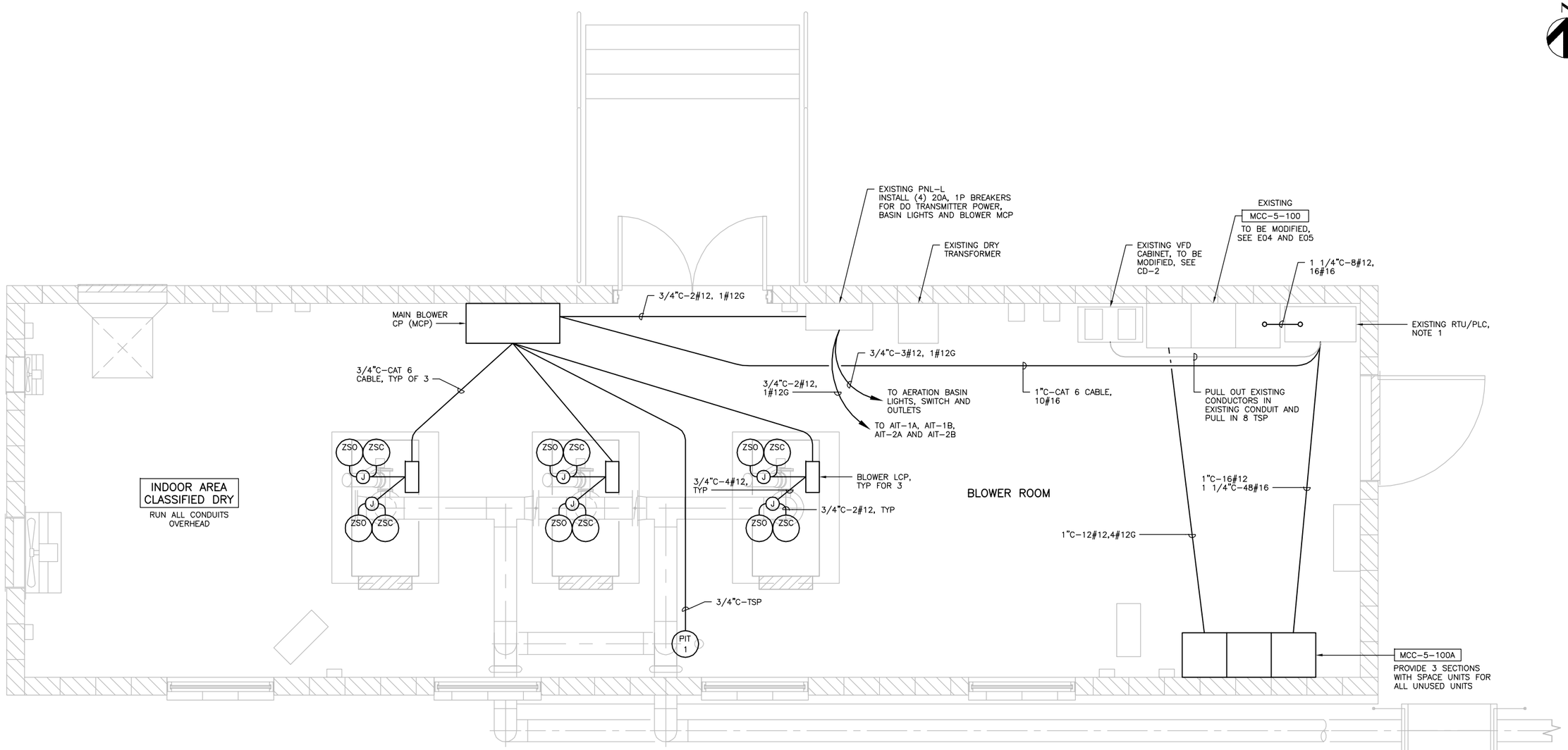

BLOWER BUILDING ELECTRICAL PLAN

1/2"=1'-0"

NOTES:

1. SEE SPECIFICATIONS FOR UPGRADES TO EXISTING RTU PANEL INCLUDING REPLACEMENT PLC AND MODIFIED I/O AND FIELD TERMINAL STRIP WIRING. REPLACE EXISTING TSP DATA LINK FROM PLC TO SCADA WITH CAT6E CABLE (PULL OUT OLD CABLE AND PULL IN CAT6E CABLE) APPROXIMATELY 200 FEET.
2. MOUNT PIT-1 TO AIR HEADER WITH NPT PIPE AND BALL VALVE.

C:\pwworking\sac\d0407107\190077_E03

BAR LENGTH ON ORIGINAL DRAWING EQUALS ONE INCH. ADJUST SCALE ACCORDINGLY

HDR Engineering, Inc.

REGISTERED PROFESSIONAL ENGINEER WILLIAM F. ETTLICH NO. 7625 EXP. 06/30/14 STATE OF CALIFORNIA 05-14-13

NO	DATE	REVISION	BY
	05-14-2013	ISSUED FOR BID	CAO

RUSSIAN RIVER COUNTY SANITATION DISTRICT

SCALE: 1/2"=1'-0" DATE: 5/10/2013
DRAWN: RJG
REVIEWED:

BIOLOGICAL NUTRIENT REMOVAL
BLOWER BUILDING ELECTRICAL PLAN

FILE NAME: 190077_E03.dwg
CONTRACT NUMBER: 70-713-7/1A
DRAWING NUMBER: E03
SHEET 37 OF 47

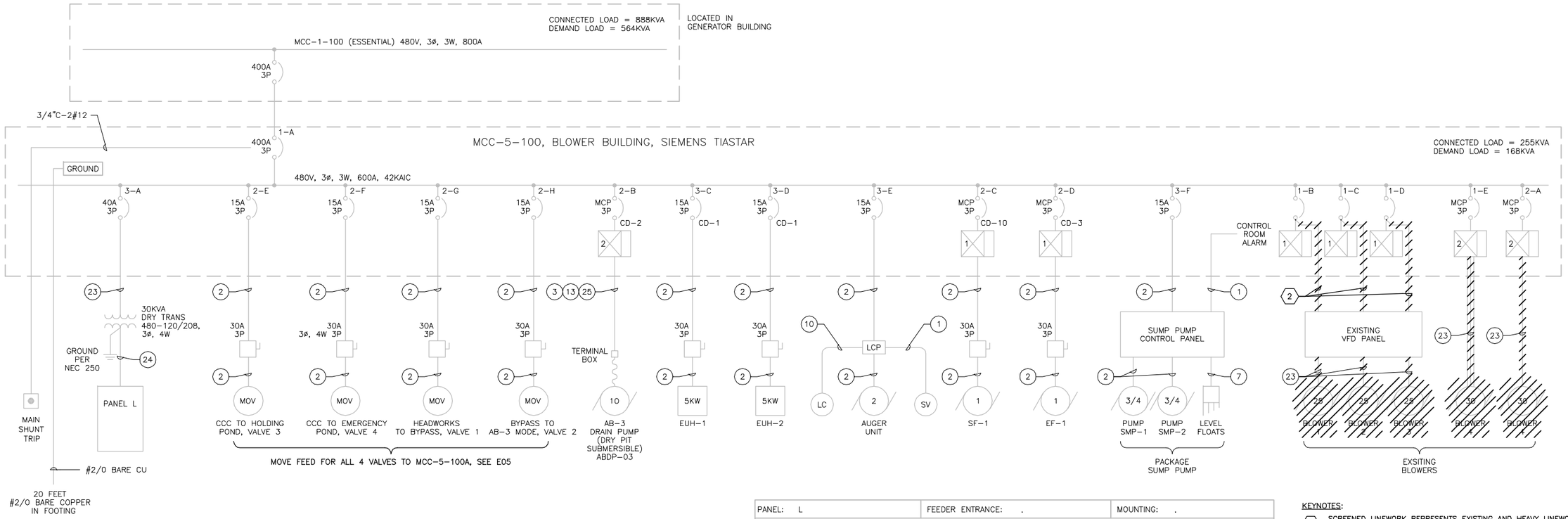

EXISTING MCC-5-100 (ESSENTIAL)

NOT TO SCALE
THIS SHEET SHOWS THE EXISTING SINGLE LINE, DEMOLITION OF BLOWERS AND THE ADDITION OF LOAD TO PANEL L. SEE E05 FOR ALL OTHER CHANGES TO MCC-5-100 AND THE ADDITION OF SUBFED MCC-5-100A.

PANEL: L | FEEDER ENTRANCE: . | MOUNTING: .

SERVICE: 120/208VOLTS, 3ø, 4W | SERVICE ENTRANCE LABEL: .

MAIN DEVICE: 100A MAIN BREAKER

	CKT NO.	CIRCUIT IDENTIFICATION	CB AMPS	VA PER PHASE A	VA PER PHASE B	VA PER PHASE C	CB AMPS	CIRCUIT IDENTIFICATION	CKT NO.	
	1	LIGHTS	20/1	1100 / 300			20/1	LIGHTS	2	
	3	OUTLETS	20/1		500 / 300		20/1	EF-2	4	
	5	LIGHTS	20/1			1400 / 500	20/1	OUTLET	6	
*	7	BLOWER MCP	20/1	500 / 200			20/1	FIT-104	8	
*	9	AIT 2A/2B	20/1		100 / 200		20/1	FIT-105	10	
*	11	AIT 1A/1B	20/1			100 / 600	20/1	BASIN LIGHTS	12	*
	13	.	.	. / .			.	.	14	
	15	.	.		. / .		.	.	16	
	17	.	.			. / .	.	.	18	
	19	.	.	. / .			.	.	20	
	21	.	.		. / .		.	.	22	
	23	.	.			. / .	.	.	24	
	25	.	.	. / .			.	.	26	
	27	.	.		. / .		.	.	28	
	29	.	.			. / .	.	.	30	
	31	.	.	. / .			.	.	32	
	33	.	.		. / .		.	.	34	
	35	.	.			. / .	.	.	36	
	37	.	.	. / .			.	.	38	
	39	.	.		. / .		.	.	40	
	41	.	.			. / .	.	.	42	
		EST TOTAL VA PER PHASE		2100	1100	2600				
		EST TOTAL PANELBOARD VA				5800				

* LOADS ADDED UNDER THIS CONTRACT

KEYNOTES:

1. SCREENED LINEWORK REPRESENTS EXISTING AND HEAVY LINEWORK REPRESENTS WORK UNDER THIS CONTRACT.
2. REMOVE EXISTING CONDUCTORS FROM CONDUIT AND REUSE CONDUIT.

EXISTING CONDUIT SCHEDULE

CONDUIT (NO.)	DESCRIPTION
1	3/4"C-2#12, 1#12(G)
2	3/4"C-3#12, 1#12(G)
3	3/4"C-4#12, 1#12(G)
7	1"C-8#12, 1#12(G)
10	1"C-MFR CABLE
13	3/4"C-TSP
23	1"C-3#8, 1#6(G)
24	1 1/4"C-4#2, 1#6(G)
25	1"C-3#8, 1#10 (G)

BAR LENGTH ON ORIGINAL DRAWING EQUALS ONE INCH. ADJUST SCALE ACCORDINGLY

HDR Engineering, Inc.

REGISTERED PROFESSIONAL ENGINEER WILLIAM F. ETTLICH NO. 7625 EXP. 06/30/14 STATE OF CALIFORNIA 05-10-13

NO	DATE	REVISION	BY
	05-14-2013	ISSUED FOR BID	CAO

RUSSIAN RIVER COUNTY SANITATION DISTRICT

SCALE: NTS | DATE: 5/8/2013
DRAWN: RJG
REVIEWED:

BIOLOGICAL NUTRIENT REMOVAL
ELECTRICAL SINGLE LINE DIAGRAM
MCC-5-100 (EXISTING LOADS)

FILE NAME: 190077_E04.dwg
CONTRACT NUMBER: 70-713-7#1A
DRAWING NUMBER: E04
SHEET 38 OF 47

C:\pwworking\sac\d0407107\190077_E04

CONDUIT SCHEDULE

CONDUIT NO.	DESCRIPTION	NOTES
1	3#12	RUN IN EXISTING CONDUIT
2	3/4"C-3#12, 1#12(G)	
3	1 1/4"C-4 TSP, 16#12	RUN TO RECYCLE PUMPS, INSTALL JB AND FAN OUT TO EACH PUMP JB
4	1"C-3#12, 1#12(G), TSP, 4#12	
5	1"C-3#6, 1#8G	
6	1 1/4"C-3#2, 1#8G	
7	1"C-6#12, 1#12G, 2 TSP, 8#12	
8	1"C-9#12, 1#12G, 3 TSP, 12#12	
9	1 1/4"C-12#12, 1#12G, 4 TSP 16#12	
10	28#12	IN EXISTING CONDUIT

NOTES:

1. SPLICE TO EXISTING VALVE CONDUCTORS IN MCC-5-100, BUNDLE AND MARK WIRES.
2. INSTALL POWER MONITOR IN COVER OF VFD CABINET, INSTALL CT'S ON EXISTING MCC FEEDER CONDUCTORS ADD FUSE BLOCK IN SECTION 1A, INSTALL VOLTAGE SENSING AND CT CONDUCTORS. SEE DETAIL ON E06.

KEYNOTES:

1. SCREENED LINEWORK REPRESENTS EXISTING AND HEAVY LINEWORK REPRESENTS WORK UNDER THIS CONTRACT.
2. INSTALL 100A, 3P BREAKER, ANGLE AND COVER IN EXISTING 1/2 SPACE UNIT, 3-B.
3. MODIFY EXISTING FVNR SIZE 2 STARTER UNITS AS SHOWN ON CD-2.
4. INSTALL 100A, 3P BREAKER IN EXISTING 1/2 SPACE UNITS 2-E, 2-F AND 2-G.

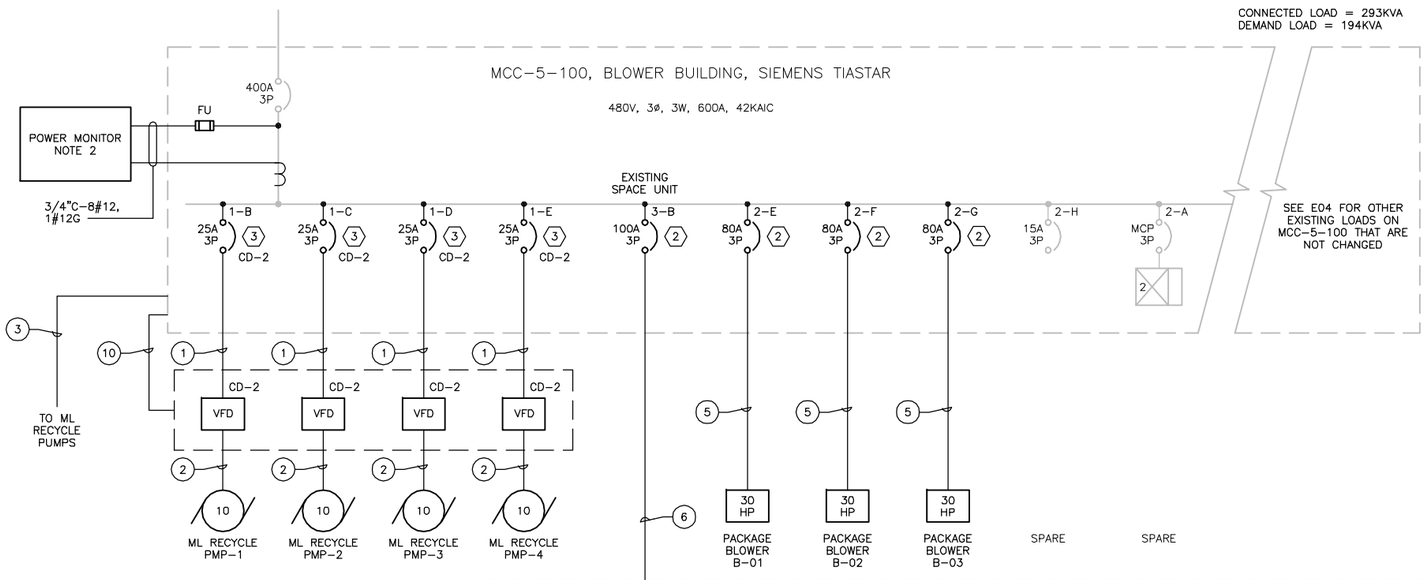

EXISTING MCC-5-100 (ESSENTIAL)

NOT TO SCALE
SHOWING ADDITIONS AND MODIFICATIONS.
UNITS 1-A, 2-A, 2-B, 2-C, 2-D, 2-H, 3-A, 3-C, 3-D, 3-E AND 3-F ARE NOT CHANGED UNITS 2-A AND 2-H TO BE SPARES.

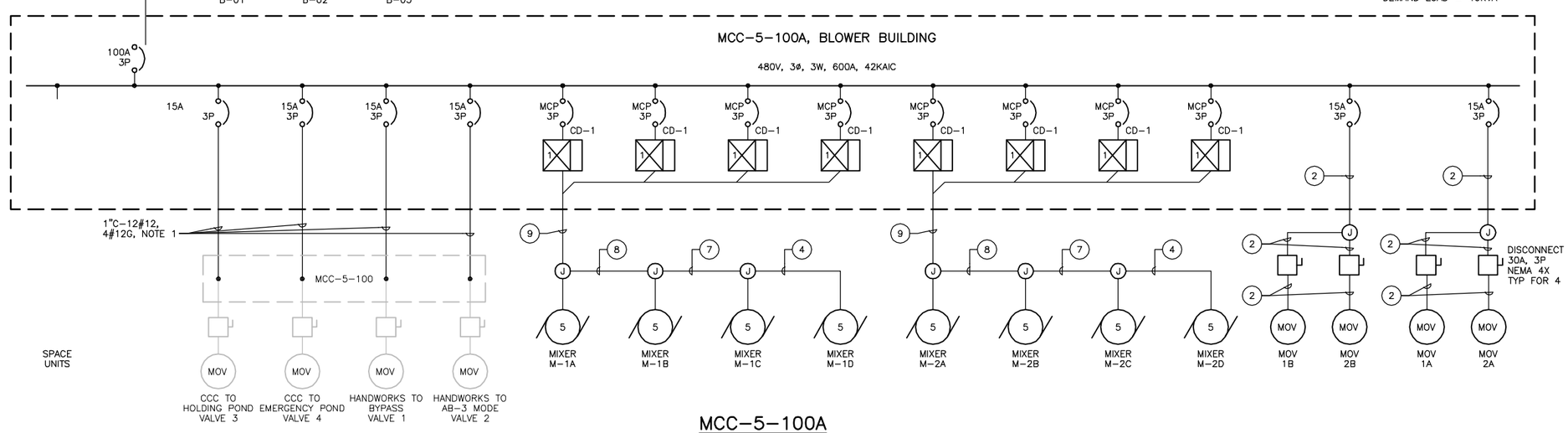

MCC-5-100A

NOT TO SCALE

BAR LENGTH ON ORIGINAL DRAWING EQUALS ONE INCH. ADJUST SCALE ACCORDINGLY

HDR Engineering, Inc.

REGISTERED PROFESSIONAL ENGINEER WILLIAM T. ETTLICH NO. 7625 EXP. 06/30/14 STATE OF CALIFORNIA 05-10-13

NO	DATE	REVISION	BY
	05-14-2013	ISSUED FOR BID	CAO

RUSSIAN RIVER COUNTY SANITATION DISTRICT

SCALE: NTS
DATE: 5/8/2013
DRAWN: RJG
REVIEWED:

BIOLOGICAL NUTRIENT REMOVAL
ELECTRICAL SINGLE LINE DIAGRAM
MCC-5-100 (ADDED LOADS)

FILE NAME: 190077_E05.dwg
CONTRACT NUMBER: 70-713-7#1A
DRAWING NUMBER: E05
SHEET 39 OF 47

C:\pwworking\sac\d0407107\190077_E05

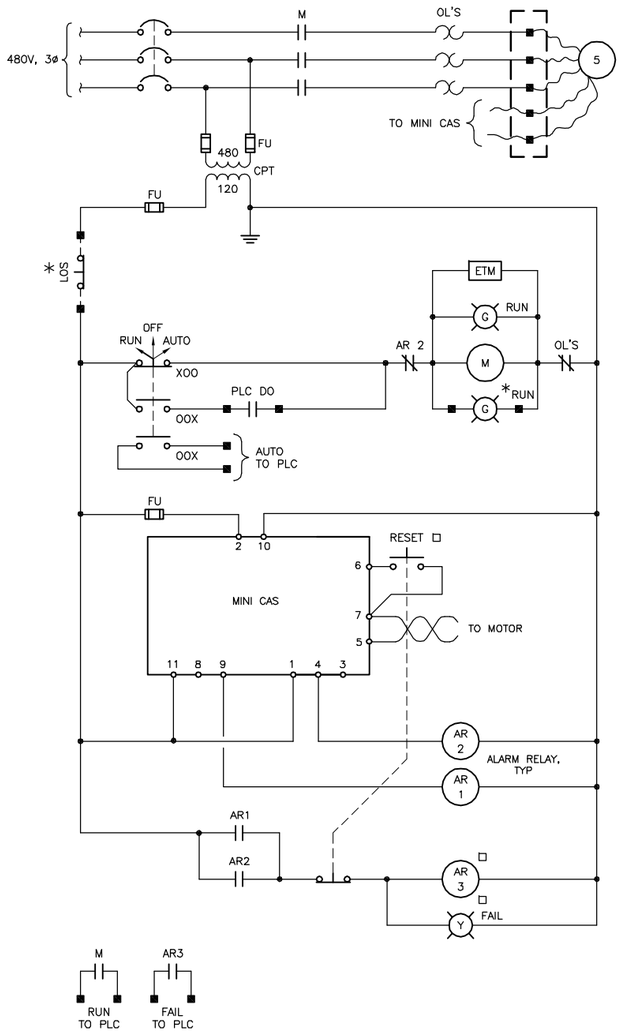

CD-1: MIXER

TYPICAL FOR M-1A, M-1B, M-1C, M-1D, M-2A, M-2B, M-2C AND M-2D

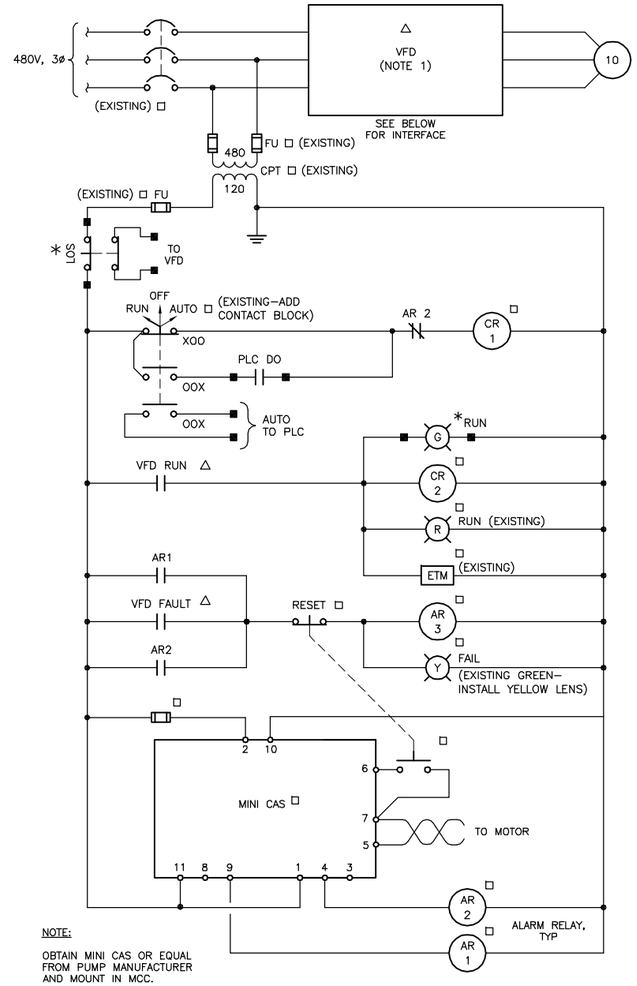

NOTE:

OBTAIN MINI CAS OR EQUAL FROM PUMP MANUFACTURER AND MOUNT IN MCC.

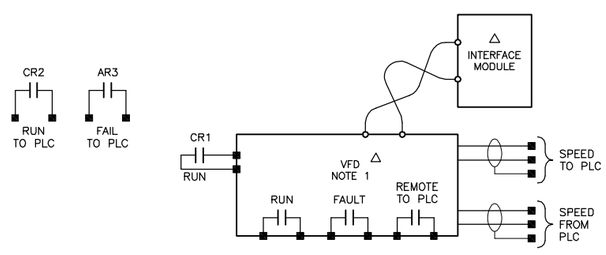

CD-2: ML RECYCLE PUMP

TYPICAL FOR PMP-1, PMP-2, PMP-3, AND PMP-4

DEVICE LOCATION

□ – MCC-5-100 BUCKET

△ – VFD PANEL

* – FIELD

NOTES FOR CD-2:

1. 3 VFD'S EXIST IN VFD CABINET ADJACENT TO MCC-1. INSTALL FOURTH VFD IN CABINET IN SAME MANNER AS OTHER 3, SEE DETAIL THIS SHEET.
2. RUN WIRING TO RTU IN (2) EXISTING 1" CONDUITS; WIRES TO BE 8 TSP, 8#12 (START/STOP) AND 32#16 STATUS.
3. RUN ML RECYCLE PUMP CONDUITS AND WIRE OVERHEAD ACROSS ROOM OUT HIGH ON SOUTH WALL AND AS SHOWN ON E02.
4. REMOVE STARTERS FROM MCC BUCKETS, REWIRE BUCKETS AS SHOWN IN CD-2. CONFIGURE ALL VFD'S FOR THE ML RECYCLE PUMPS.
5. INSTALL GROUND BUS IN VFD CABINET FOR AT LEAST 8#12, AND 1#8. RUN #8 GROUND FROM GROUND BUS TO MCC-5-100 GROUND BUS IN VFD CABINET.

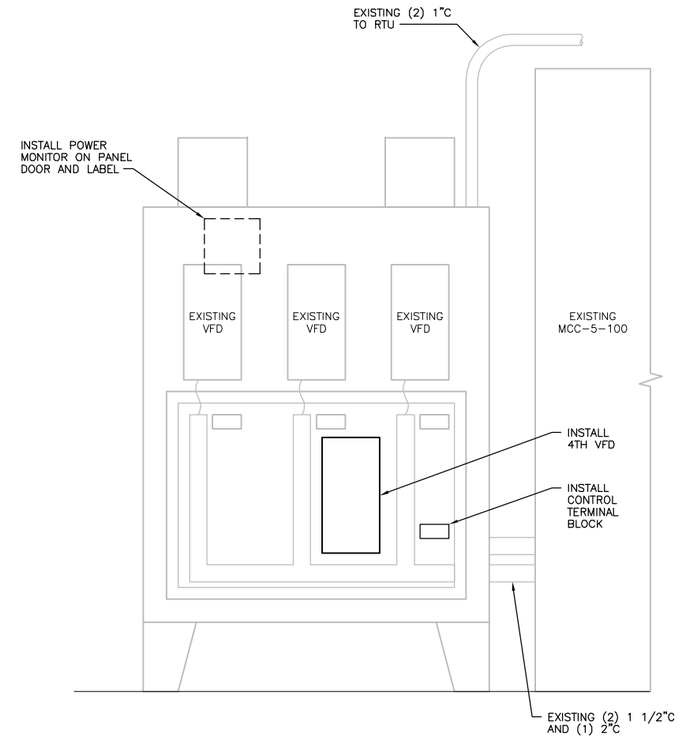

EXISTING VFD PANEL ADDITIONS

NTS

BAR LENGTH ON ORIGINAL DRAWING EQUALS ONE INCH. ADJUST SCALE ACCORDINGLY

HDR Engineering, Inc.

REGISTERED PROFESSIONAL ENGINEER WILLIAM F. ETTLIN NO. 7625 EXP. 09/30/14 STATE OF CALIFORNIA 05-12-13

NO	DATE	REVISION	BY
	05-14-2013	ISSUED FOR BID	CAO

RUSSIAN RIVER COUNTY SANITATION DISTRICT

SCALE: NTS | DATE: 5/8/2013

DRAWN: RJG

REVIEWED:

BIOLOGICAL NUTRIENT REMOVAL

ELECTRICAL CONTROL DIAGRAMS

FILE NAME: 190077_E05.dwg

CONTRACT NUMBER: 70-713-7/1A

DRAWING NUMBER: E06

SHEET 40 OF 47

C:\pwworking\sac\d0407107\190077_E06

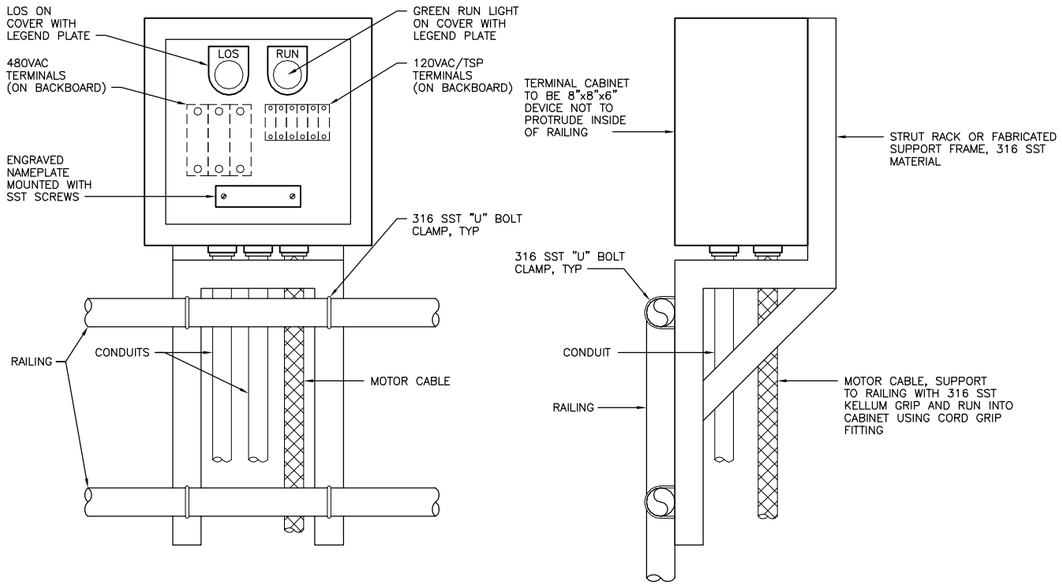

RAILING MOUNTED EQUIPMENT DETAIL

1 / E07

NTS

NOTES:

1. SIMILAR FOR TERMINAL CABINETS, TRANSMITTERS AND DISCONNECT SWITCHES.

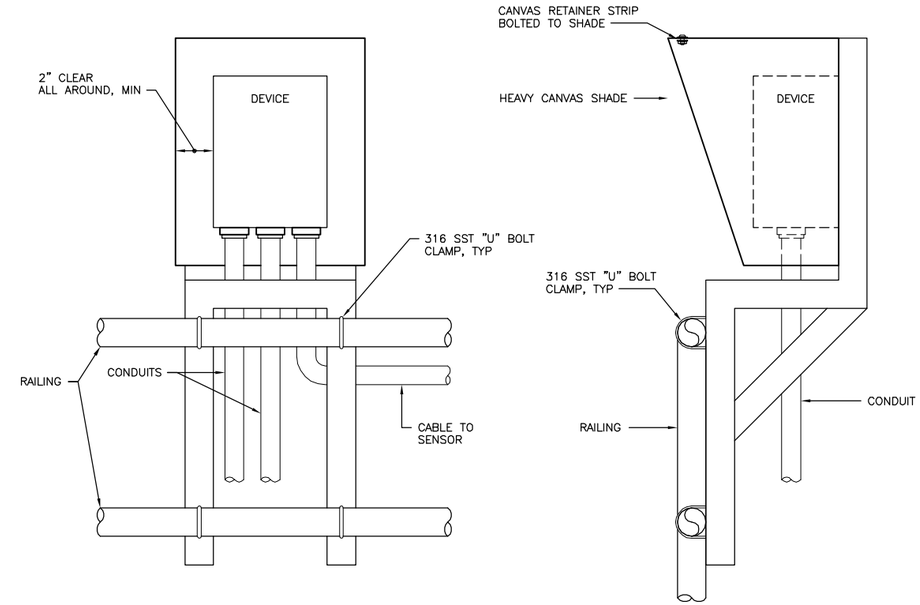

WEATHER SHADE DETAIL

2 / E07

NTS

NOTES:

1. MATERIAL TO BE 316 STAINLESS STEEL, WELD AND GRIND SMOOTH ALL SEAMS.

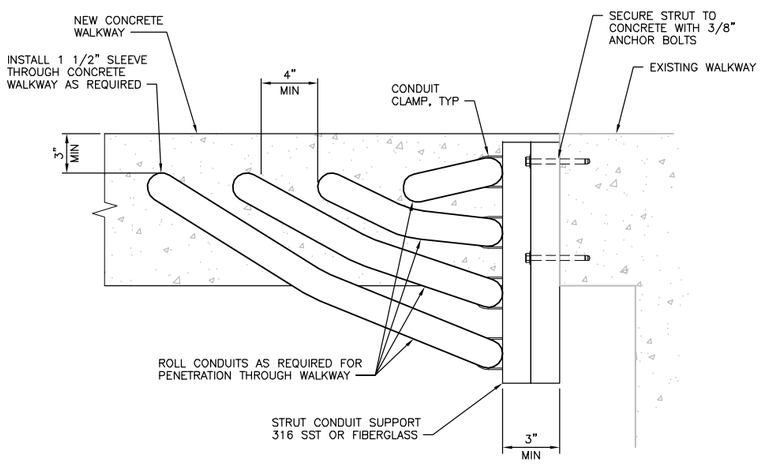

NOTES:

1. COORDINATE WITH CONTRACTOR FOR PLACEMENT OF EMBEDDED SLEEVES ACCORDING TO PLACEMENT CRITERIA.

CONCRETE WALKWAY CROSSING

3 / E07

NTS

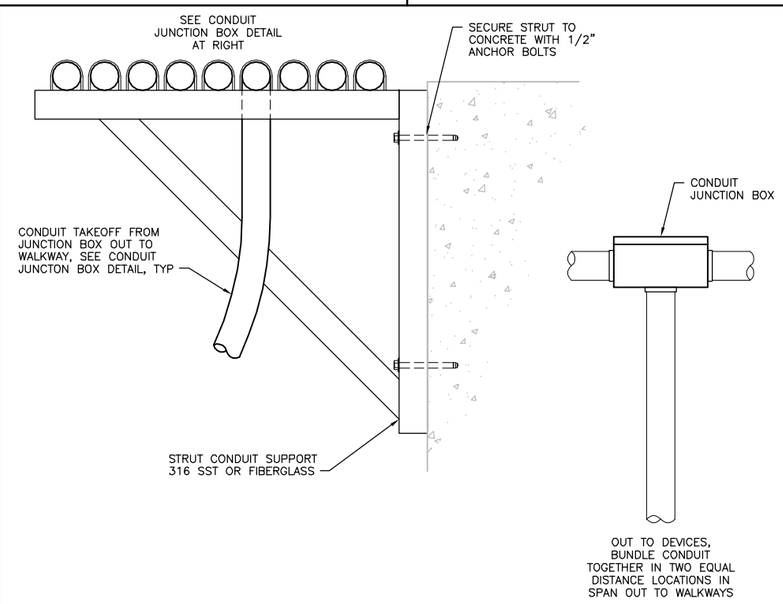

CONDUIT JUNCTION BOX DETAIL

MAIN CONDUIT RUN SUPPORT ALONG NORTH WALL OF BASINS

4 / E07

NTS

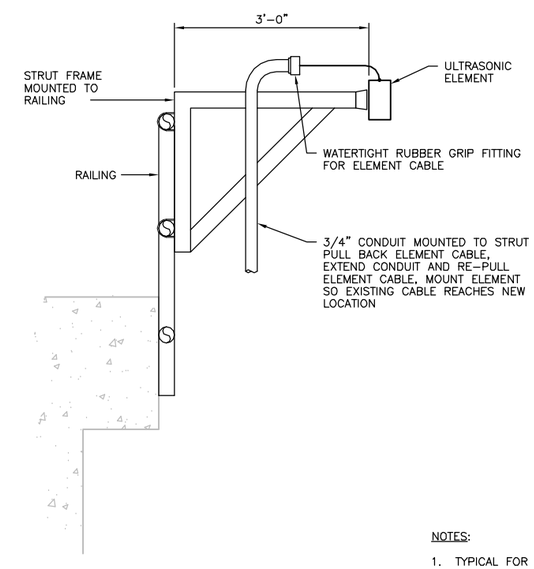

NOTES:

1. TYPICAL FOR LE-1A AND LE-1B.

EXISTING LEVEL ELEMENT REMOUTNING

5 / E07

NTS

C:\pwworking\sac\d0407107\190077_E07

BAR LENGTH ON ORIGINAL DRAWING EQUALS ONE INCH. ADJUST SCALE ACCORDINGLY

HDR Engineering, Inc.

REGISTERED PROFESSIONAL ENGINEER WILLIAM F. ETTLICH NO. 7625 EXP. 09/30/14 STATE OF CALIFORNIA 05-10-13

NO	DATE	REVISION	BY
	05-14-2013	ISSUED FOR BID	CAO

RUSSIAN RIVER COUNTY SANITATION DISTRICT

SCALE: NTS | DATE: 5/10/2013

DRAWN: RJG

REVIEWED:

BIOLOGICAL NUTRIENT REMOVAL

ELECTRICAL DETAILS 1

FILE NAME: 190077_E07.dwg

CONTRACT NUMBER: 70-713-7#1A

DRAWING NUMBER: E07

SHEET 41 OF 47

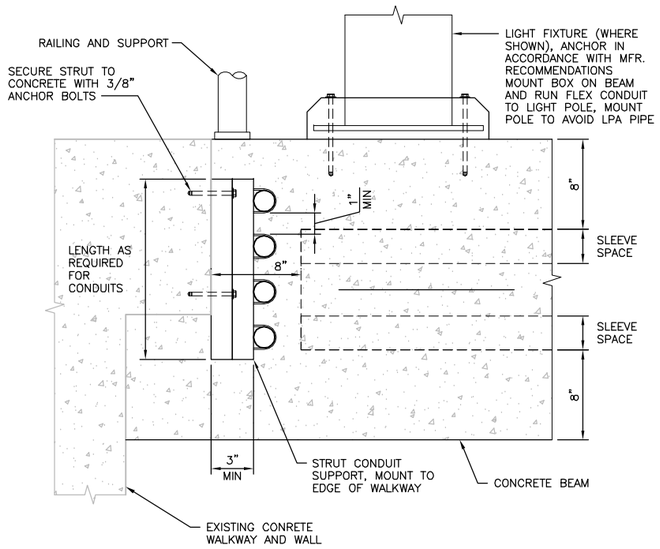

CONCRETE WALKWAY CONDUIT INSTALLATION

1 / E08

NTS

NOTES:

1. COORDINATE WITH CONTRACTOR FOR PLACEMENT OF EMBEDDED SLEEVES IN BEAMS AND ACROSS WALKWAYS.

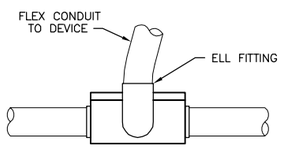

IN LINE TAP TO DEVICE

2 / E08

NTS

NOTES:

1. FOR IN-LINE TEE CONDULET TAP, PLAN FOR CONDUIT TO BE AT TOP OF RUN FOR ACCESS.

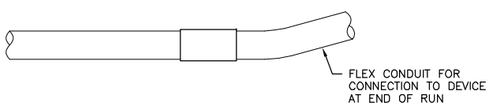

END OF RUN TAP TO DEVICE

3 / E08

NTS

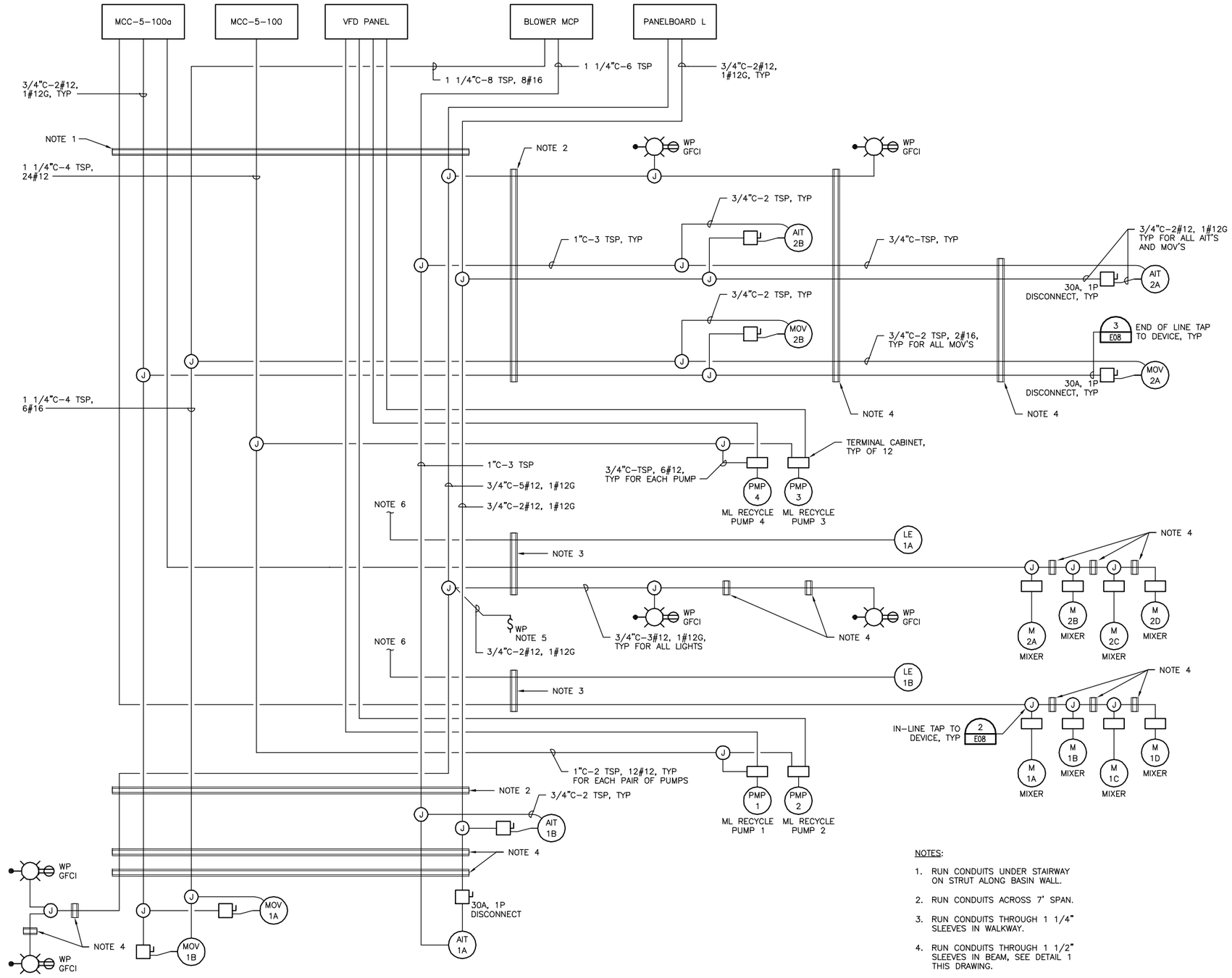

AERATION BASINS WIRING BLOCK DIAGRAM

NTS

NOTES:

1. RUN CONDUITS UNDER STAIRWAY ON STRUT ALONG BASIN WALL.
2. RUN CONDUITS ACROSS 7' SPAN.
3. RUN CONDUITS THROUGH 1 1/4" SLEEVES IN WALKWAY.
4. RUN CONDUITS THROUGH 1 1/2" SLEEVES IN BEAM, SEE DETAIL 1 THIS DRAWING.
5. WP SWITCH MOUNTED ON RAILING.
6. EXTEND EXISTING CONDUIT AND TSP TO EXISTING LE AT RELOCATED MOUNTING.

BAR LENGTH ON ORIGINAL DRAWING EQUALS ONE INCH. ADJUST SCALE ACCORDINGLY

HDR Engineering, Inc.

REGISTERED PROFESSIONAL ENGINEER WILLIAM T. ETTLICH NO. 7625 EXP. 09/30/14 STATE OF CALIFORNIA 05-10-13

NO	DATE	REVISION	BY
	05-14-2013	ISSUED FOR BID	CAO

RUSSIAN RIVER COUNTY SANITATION DISTRICT

SCALE: NTS | DATE: 5/10/2013

DRAWN: RJG

REVIEWED:

BIOLOGICAL NUTRIENT REMOVAL

ELECTRICAL DETAILS 2

FILE NAME: 190077_E08.dwg

CONTRACT NUMBER: 70-713-7#1A

DRAWING NUMBER: E08

SHEET 42 OF 47

C:\pwworking\sac\d0407107\190077_E08

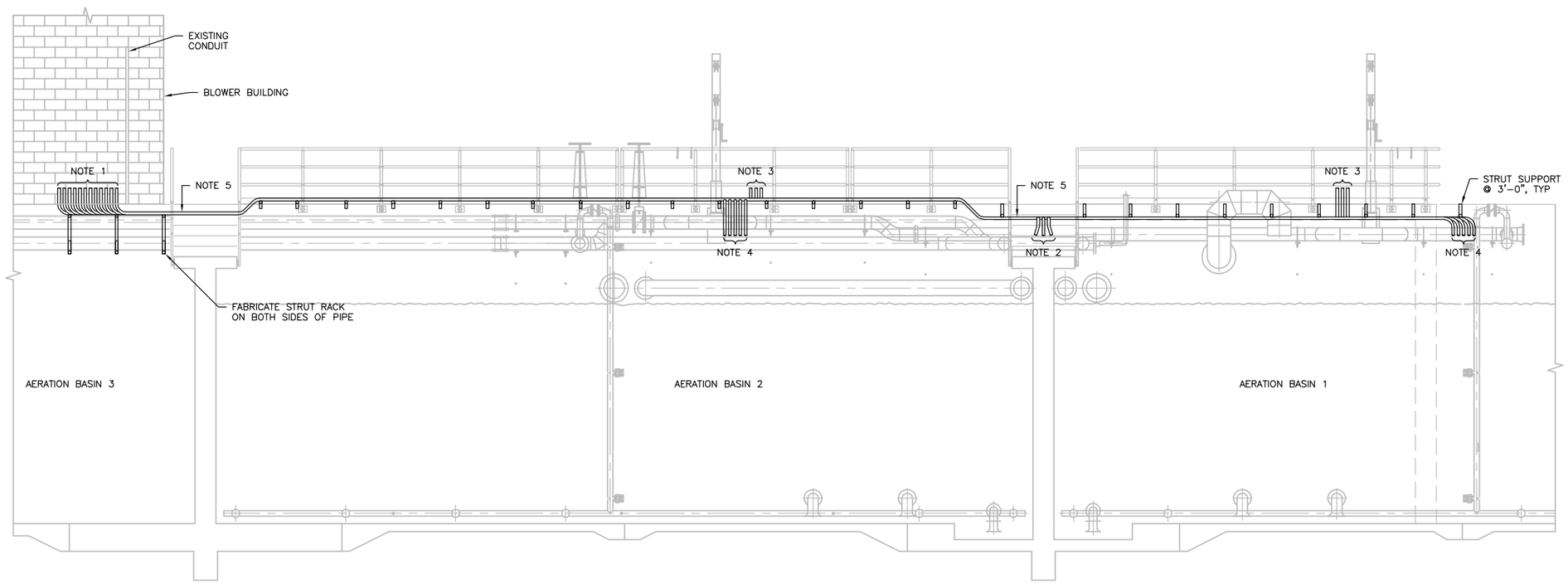

NORTH BASIN WALL
CONDUIT INSTALLATION (A / E02)
1/4" = 1'-0"

NOTES:

1. RUN RGS CONDUITS UP SIDE OF BUILDING AND CORE DRILL INTO BUILDING, MOUNT ON STRUT AND SEAL PENETRATIONS.
2. CONDUITS OUT TO WALKWAY. ROUTE TO SUPPORTS ON EACH SIDE OF WALKWAY.
3. CONDUITS UP TO PUMP TERMINAL CABINETS.
4. CONDUITS OUT TO WALKWAY, SUPPORT ON STRUT. CONDUITS TURN 90° AND DROP TO WALKWAY ELEVATION.
5. RUN CONDUIT UNDER STAIRWAY, SIDE SUPPORT.

C:\pwworking\sac\d0407107\190077_E09

BAR LENGTH ON ORIGINAL DRAWING EQUALS ONE INCH. ADJUST SCALE ACCORDINGLY

HDR Engineering, Inc.

REGISTERED PROFESSIONAL ENGINEER WILLIAM F. ETTLICH NO. 7625 EXP. 06/30/14 STATE OF CALIFORNIA 05-10-13

NO	DATE	REVISION	BY
	05-14-2013	ISSUED FOR BID	CAO

RUSSIAN RIVER COUNTY SANITATION DISTRICT

SCALE: 1/4"=1'-0" | DATE: 5/10/2013
DRAWN: RJG
REVIEWED:

BIOLOGICAL NUTRIENT REMOVAL
AERATION BASIN
NORTH WALL CONDUIT INSTALLATION

FILE NAME: 190077_E09.dwg
CONTRACT NUMBER: 70-713-7#1A
DRAWING NUMBER: E09
SHEET 43 OF 47

PRIMARY ELEMENT SYMBOLOGY

- ORIFICE PLATE
- PITOT TUBE OR ANNUBAR
- FI — ROTOMETER
- SONIC OR ULTRASONIC FLOWMETER
- M — MAGNETIC FLOWMETER
- FT — MASS DISPERSION FLOWMETER
- ULTRASONIC LEVEL
- WEIR
- PROPELLER OR TURBINE METER
- VENTURI TUBE
- FLOAT SWITCH
- TE — TEMPERATURE ELEMENT WITH THERMOWELL
- FG — SIGHT FLOW GLASS

VALVE AND GATE SYMBOLOGY

- X — AIR–RELEASE VACUUM VALVE
  ARV = AIR RELEASE VALVE
  VAC = VACUUM
- BV – BALL VALVE
- BFV – BUTTERFLY VALVE
- CNV – CONE VALVE
- CV – CHECK VALVE
- DDCV – DOUBLE–DISK CHECK VALVE
- BCV – BALL CHECK VALVE
- DV – DIAPHRAGM VALVE
- GV – GATE VALVE
- GLV – GLOBE VALVE
- KGV – KNIFE GATE VALVE
- NV – NEEDLE VALVE
- PNV – PINCH VALVE
- PV – PLUG VALVE
- TWBV – THREE–WAY BALL VALVE
- TWPV – THREE–WAY PLUG VALVE
- PRV – PRESSURE–REDUCING VALVE
- PRV – PRESSURE–REGULATING VALVE
- OR PRV – PRESSURE–RELIEF VALVE
- TWCV – THREE–WAY CONTROL VALVE
- Y–STRAINER
- FLAP GATE

INSTRUMENT SYMBOLOGY

- LOCALLY MOUNTED FIELD INSTRUMENTATION
- MOUNTED ON PANEL FRONT
- MOUNTED INSIDE PANEL
- FRONT PANEL MOUNTED ON AUXILIARY PANEL (SUBSCRIPT INDICATES PANEL)
- MOUNTED INSIDE AUXILIARY PANEL
- PILOT LIGHT
- INSTRUMENT FUNCTIONS SHARING COMMON HOUSING
- I — COMPLEX INTERLOCK AS DEFINED IN CONTROL DIAGRAM OR IN SPECIFICATIONS
- SHARED DISPLAY, SHARED CONTROL, FIELD MOUNTED
- SHARED DISPLAY, SHARED CONTROL AT PRIMARY LOCATION – NORMALLY ACCESSIBLE TO OPERATOR (SCADA WORKSTATION)
- SHARED DISPLAY, SHARED CONTROL AT AUXILLIARY LOCATION – NORMALLY ACCESSIBLE TO OPERATOR (IPC, HMI)
- PROGRAMMABLE LOGIC CONTROL, PRIMARY LOCATION – NORMALLY INACCESSIBLE TO OPERATOR
- FLEXIBLE CONNECTION
- DIAPHRAGM SEAL
- ANNULAR SEAL

INSTRUMENT IDENTIFICATION LETTERS

	FIRST LETTER		SUCCEEDING LETTERS		
	MEASURED OR INITIATING VARIABLE	MODIFIER	READOUT OR PASSIVE FUNCTION	OUTPUT FUNCTION	MODIFIER
A	ANALYSIS		ALARM		
B	BURNER, COMBUSTION		USER'S CHOICE	USER'S CHOICE	USER'S CHOICE
C	USER'S CHOICE			CONTROL	CLOSED
D	USER'S CHOICE	DIFFERENTIAL			
E	VOLTAGE		SENSOR (PRIMARY ELEMENT)		
F	FLOW RATE	RATIO (FRACTION)			
G	USER'S CHOICE		GLASS, VIEWING DEVICE		
H	HAND				HIGH
I	CURRENT (ELECTRICAL)		INDICATE		
J	POWER	SCAN			
K	TIME, TIME SCHEDULE	TIME; RATE OF CHANGE		CONTROL STATION	
L	LEVEL		LIGHT		LOW
M	USER'S CHOICE	MOMENTARY			MIDDLE, INTERMEDIATE
N	USER'S CHOICE		USER'S CHOICE	USER'S CHOICE	USER'S CHOICE
O	USER'S CHOICE		ORIFICE, RESTRICTION		
P	PRESSURE, VACUUM		POINT (TEST) CONNECTION		
Q	QUANTITY	INTEGRATE, TOTALIZE			
R	RADIATION		RECORD		
S	SPEED, FREQUENCY	SAFETY		SWITCH	
T	TEMPERATURE			TRANSMIT	
U	MULTIVARIABLE		MULTIFUNCTION	MULTIFUNCTION	MULTIFUNCTION
V	VIBRATION, MECH. ANALYSIS			VALVE DAMPER, LOUVER	
W	WEIGHT, FORCE		WELL		
X	UNCLASSIFIED	X–AXIS	UNCLASSIFIED	UNCLASSIFIED	UNCLASSIFIED
Y	EVENT, STATE OR PRESENCE	Y–AXIS		RELAY, COMPUTE, CONVERT	
Z	POSITION, DIMENSION	Z–AXIS		DRIVER, ACTUATOR UNCLASSIFIED FINAL CONTROL ELEMENT	

PROCESS AND INSTRUMENTATION ABBREVIATIONS

AI	ANALOG INPUT
AO	ANALOG OUTPUT
BD	BLOWDOWN
BS	BOTTOM SLUDGE
BSCR	BANDSCREEN
BYP	BYPASS
BWW	BACKWASH
C	CHILLED WATER
CA	COMPRESSED AIR
CHEMD	CHEMICAL DRAIN
CL2	CHLORINE (ANALYZER MODIFIER)
CLS	CHLORINE SOLUTION
CMP	COMPACTOR
CND	CONDENSER
CO	CARBON MONOXIDE (ANALYZER MODIFIER)
CO2	CARBON DIOXIDE (ANALYZER MODIFIER)
COMB	COMBUSTIBLES (ANALYZER MODIFIER)
COND	CONDUCTIVITY(ANALYZER MODIFIER)
CSL	CAUSTIC SOLUTION
CW	CITY WATER
D	DRAIN
DC	DIGESTER CLEANING
DEN	DENSITY
DG	DIGESTER GAS
DI	DIGITAL INPUT
DO	DIGITAL OUTPUT
DO	DISSOLVED OXYGEN (ANALYZER MODIFIER)
DS	DIGESTER SLUDGE
E/P	VOLTAGE TO PNEUMATIC
FA	FOUL AIR
FD	FLOOR DRAIN
FECL2	FERROUS CHLORINE
FECL3	FERRIC CHLORINE
FE	FILTER EFFLUENT
FF	FILTER FEED
FO	FUEL OIL
FW	FEED WATER
GR	GRIT
H2O2	HYDROGEN PEROXIDE
H2S	HYDROGEN SULFIDE (ANALYZER MODIFIER)
HCL	HYDROCHLORIC ACID
HCL	HYDROGEN CHLORIDE (ANALYZER MODIFIER)
HPA	HIGH PRESSURE AIR
HPDG	HIGH PRESSURE DIGESTER AIR
HW	HOT WATER
HWR	HOT WATER RETURN
HWS	HOT WATER SUPPLY
I/O	INPUT/OUTPUT
I/P	CURRENT TO PNEUMATIC
IA	INSTRUMENT AIR
IW	INSTRUMENT WATER
JOS	JOINT OUTFALL SEWER
JWR	JACKET WATER RETURN
JWS	JACKET WATER SUPPLY
LCP	LOCAL CONTROL PANEL
LO	LUBE OIL
LPA	LOW PRESSURE AIR
LPDG	LOW PRESSURE DIGESTER AIR
MA	MURIATIC ACID
ML	MIXED LIQUOR
MXR	MIXER
NG	NATURAL GAS
NOX	NITROGEN OXIDE (ANALYZER MODIFIER)
O2	OXYGEN, OXYGEN (ANALYZER MODIFIER)
OF	OVERFLOW
OI	OPERATOR INTERFACE
P	PROPANE
P&ID	PROCESS AND INSTRUMENTATION DIAGRAM
PD	PLANT DRAIN
PE	PRIMARY EFFLUENT
PERM	PERMEATE
PI	PRIMARY INFLUENT
PMP	PUMP
POL	POLYMER
POTW	POTABLE WATER
PS	PRIMARY SLUDGE
PW	PLANT WATER
RAS	RETURN ACTIVATED SLUDGE
REC	RECIRCULATION
RS	RAW SEWAGE
RW	RECLAIMED WATER
S	SCUM
SAM	SAMPLE
SC	SLUDGE CAKE
SCR	SCREENINGS
SD	SANITARY DRAIN
SE	SECONDARY EFFLUENT
SEW	SEWER
SHC	SODIUM HYPOCHLORITE
SI	SECONDARY INFLUENT
SN	SUPERNATANT
SO	SLOPE OIL
SOD	SLOPE OIL DRAIN
SS	SUSPENDED SOLIDS (ANALYZER MODIFIER)
SW	SEAL WATER
SWR	SOFTENED WATER
TFE	TRICKLING FILTER CLARIFIER EFFLUENT
TFI	TRICKLING FILTER CLARIFIER INFLUENT
TURB	TURBIDITY (ANALYZER MODIFIER)
TWAS	TRICKENED WASTE ACTIVATED SLUDGE
V	VENT
WAN	WIDE AREA NETWORK
WAS	WASTE ACTIVATED SLUDGE
WW	WASH WATER

CONTROL SWITCH NOTATION ABBREVIATIONS

XXX

ACK	ACKNOWLEDGE
ESTOP	EMERGENCY STOP
FAIL	FAILURE
FOR	FORWARD–OFF–REVERSE
FR	FORWARD–REVERSE
FS	FAST–SLOW
HA	HAND–AUTO
HOA	HAND–OFF–AUTO
HOR	HAND–OFF–REMOTE
LL	LEAD–LAG
LLS	LEAD–LAG–STANDBY
LOR	LOCAL–OFF–REMOTE
LR	LOCAL–REMOTE
LS	LEAD–STANDBY
MA	MANUAL–AUTO
OAC	OPEN–AUTO–CLOSE
OC	OPEN–CLOSE
OO	ON–OFF
OSC	OPEN–STOP–CLOSE
RJ	RUN–JOG
RJR	RUN–JOG–REVERSE
SIL	SILENCE

ACTUATOR SYMBOLOGY

- OPERATOR ABBREVIATIONS:
  M = MOTOR
  P = PNEUMATIC
  S = SOLENOID
- FLOAT OPERATOR
- SPRING–OPPOSED SINGLE–ACTING PNEUMATIC CYLINDER
- DOUBLE–ACTING PNEUMATIC CYLINDER
- PNEUMATIC DIAPHRAGM
- PNEUMATIC DIAPHRAGM WITH POSITIONER

TYPES OF POWER SUPPLY

A	PLANT COMPRESSED AIR
IA	INSTRUMENT AIR
ES	ELECTRICAL SUPPLY
NG	NATURAL GAS
HYD	HYDRAULIC
AC	120VAC POWER
480	480VAC POWER
DC	24VDC POWER

INSTRUMENT PLC INPUT/OUTPUT SIGNAL

- ANALOG INPUT
- ANALOG OUTPUT
- DISCRETE OUTPUT
- DISCRETE INPUT

LINE TYPES

- MAIN PROCESS LINE
- SECONDARY PROCESS LINE
- AUXILIARY PROCESS LINE
- DIRECTION OF FLOW
- PNEUMATIC SIGNAL
- ELECTRICAL SIGNAL
- HYDRAULIC SIGNAL
- SOFTWARE OR DATA LINK
- SIGNAL CONNECTION
- CROSSOVER – NO CONNECTION
- X — CAPILLARY
- MECHANICAL LINK
- E — E — ETHERNET I/O DATA LINK
- D — D — DEVICENET DATA LINK
- S — S — SERIAL RS232 LINK
- FO — FO — FIBER OPTIC

CROSS REFERENCE SYMBOLOGY

- SEQUENCE NUMBER
- 1## — CONTINUATION FROM DRAWING 1##
- SEQUENCE NUMBER
- 1## — CONTINUATION TO DRAWING 1##

GENERAL NOTES

1. THIS IS A STANDARD INSTRUMENTATION SYMBOLOGY AND ABBREVIATIONS DRAWING. LISTING OF SYMBOLS AND ABBREVIATIONS DOES NOT IMPLY ALL SYMBOLS AND ABBREVIATIONS HAVE BEEN USED ON THIS PROJECT.
1. SEE PROCESS, MECHANICAL AND PLUMBING LEGEND DRAWINGS FOR MISCELLANEOUS PIPING SYMBOLS.
2. SCREENING OR SHADING OF WORK IS USED TO INDICATE EXISTING COMPONENTS OR TO DE–EMPHASIZE PROPOSED IMPROVEMENTS TO HIGHLIGHT SELECTED TRADE WORK. REFER TO CONTEXT OF EACH DRAWING FOR USAGE.
3. VALVE SYMBOLS SHOWN HERE ARE APPLICABLE ONLY TO INSTRUMENTATION DIAGRAMS. SEE PROCESS, MECHANICAL AND PLUMBING LEGEND DRAWING FOR VALVE SYMBOLS USED ELSEWHERE ON THE DRAWINGS.

BAR LENGTH ON ORIGINAL DRAWING EQUALS ONE INCH. ADJUST SCALE ACCORDINGLY

HDR Engineering, Inc.

REGISTERED PROFESSIONAL ENGINEER WILLIAM F. ETTLICH NO. 7625 EXP. 09/30/14 STATE OF CALIFORNIA 05-10-13

NO	DATE	REVISION	BY
	05-14-2013	ISSUED FOR BID	CAO

RUSSIAN RIVER COUNTY SANITATION DISTRICT

SCALE: NTS
DATE: 5/10/2013
DRAWN: RJG
REVIEWED:

BIOLOGICAL NUTRIENT REMOVAL
INSTRUMENTATION LEGEND

FILE NAME: 190077_I01.dwg
CONTRACT NUMBER: 70-713-7#1A
DRAWING NUMBER: I01
SHEET 44 OF 47

C:\pwworking\sac\d0407107\190077_I01

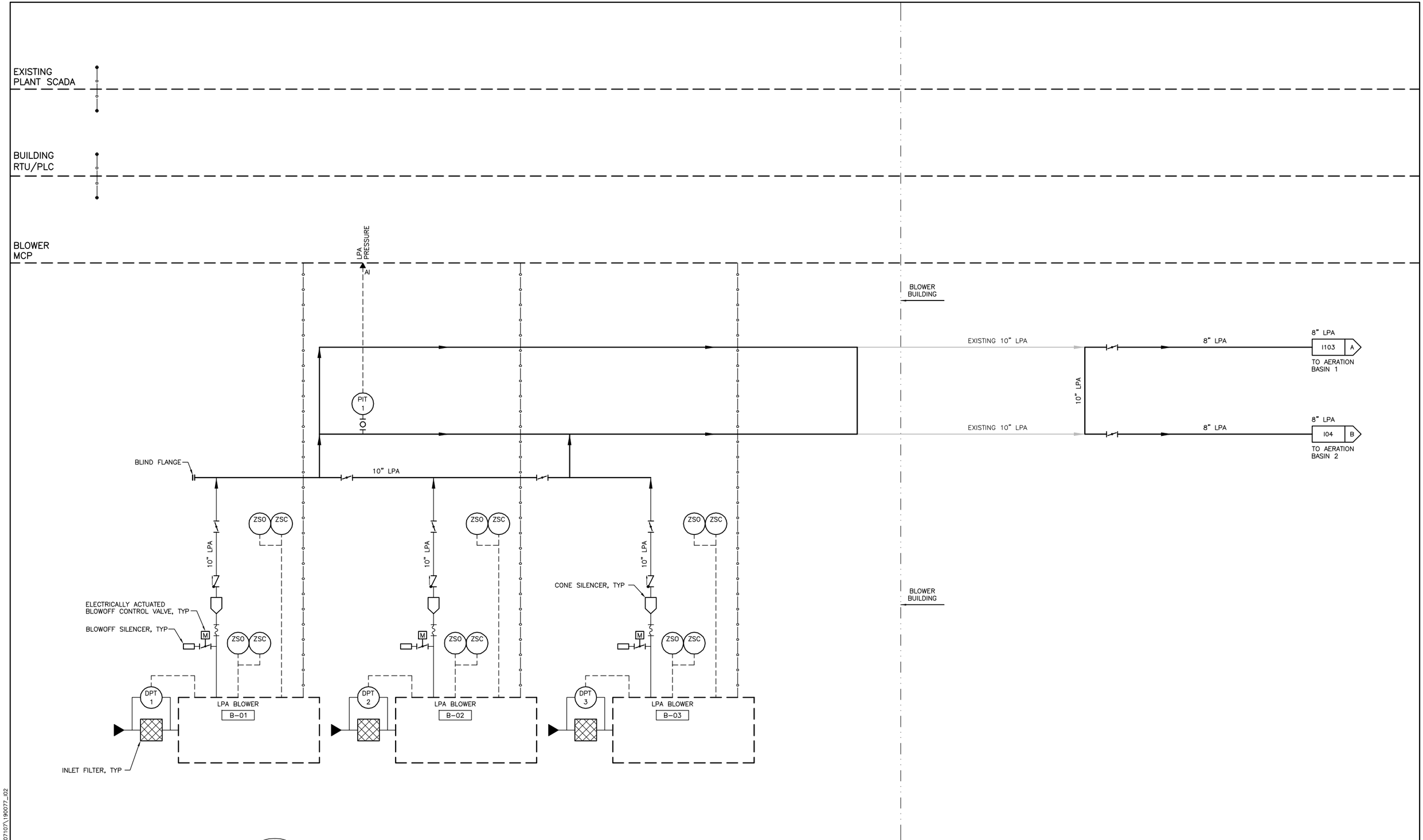

C:\pwworking\sac\d0407107\190077_I02

BAR LENGTH ON ORIGINAL DRAWING EQUALS ONE INCH. ADJUST SCALE ACCORDINGLY

HDR Engineering, Inc.

REGISTERED PROFESSIONAL ENGINEER WILLIAM F. ETTLIN NO. 7625 EXP. 09/30/14 STATE OF CALIFORNIA 05-12-13

NO	DATE	REVISION	BY
	05-14-2013	ISSUED FOR BID	CAO

RUSSIAN RIVER COUNTY
SANITATION DISTRICT

SCALE: NTS
DATE: 5/10/2013
DRAWN: RJG
REVIEWED:

BIOLOGICAL NUTRIENT REMOVAL

PROCESS AND INSTRUMENTATION DIAGRAM
LOW PRESSURE AIR BLOWERS

FILE NAME: 190077_I02.dwg
CONTRACT NUMBER: 70-713-7#1A
DRAWING NUMBER: I02
SHEET 45 OF 47

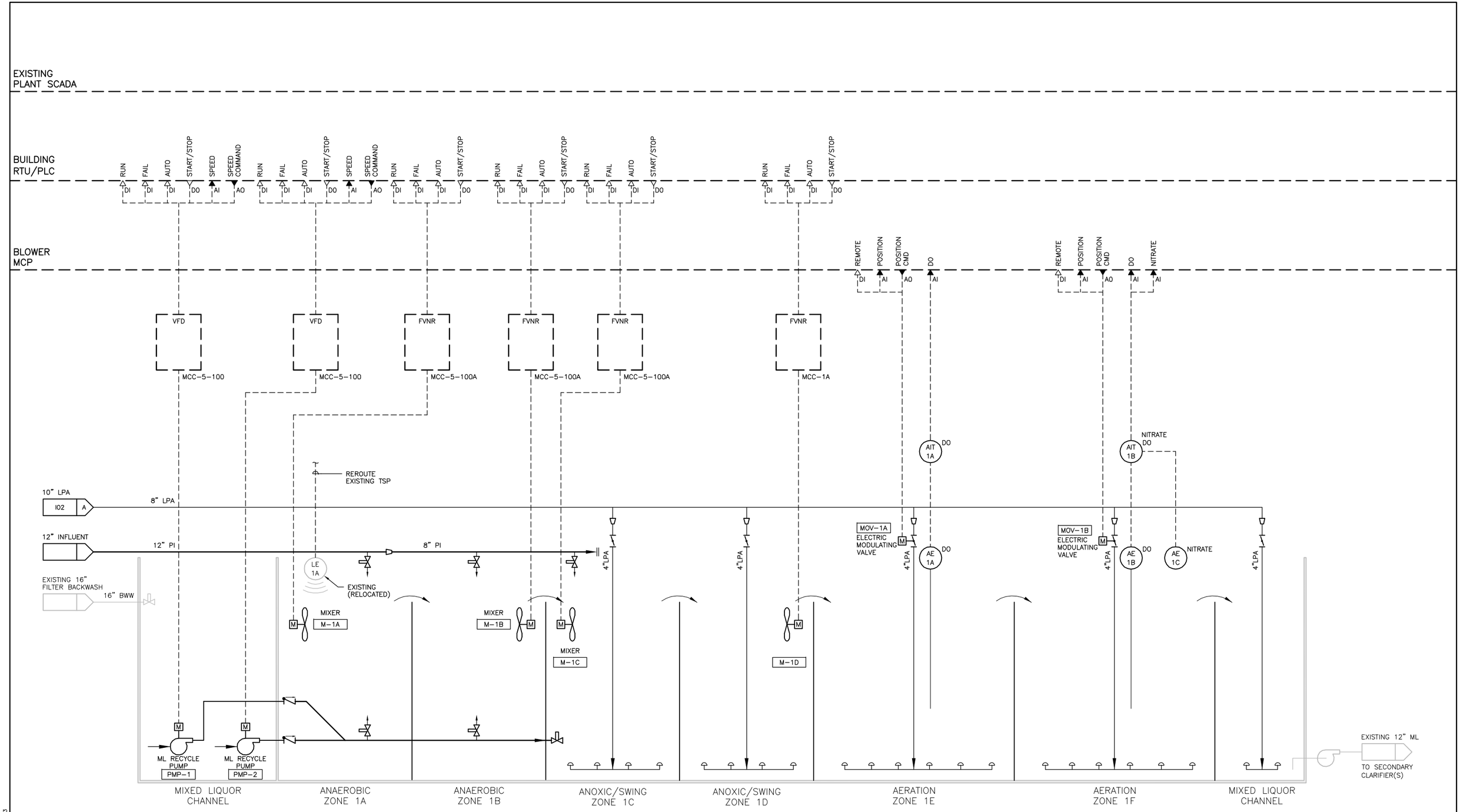

BAR LENGTH ON ORIGINAL DRAWING EQUALS ONE INCH. ADJUST SCALE ACCORDINGLY

HDR Engineering, Inc.

REGISTERED PROFESSIONAL ENGINEER WILLIAM F. ETTLICH NO. 7625 EXP. 06/30/14 STATE OF CALIFORNIA 05-10-13

NO	DATE	REVISION	BY
	05-14-2013	ISSUED FOR BID	CAO

RUSSIAN RIVER COUNTY SANITATION DISTRICT

SCALE: NTS
DATE: 5/10/2013
DRAWN: RJG
REVIEWED:

BIOLOGICAL NUTRIENT REMOVAL

PROCESS AND INSTRUMENTATION DIAGRAM AERATION BASIN 1

FILE NAME: 190077_I03.dwg
CONTRACT NUMBER: 70-713-7M1A
DRAWING NUMBER: I03
SHEET 46 OF 47

C:\pwworking\sac\d0407107\190077_03

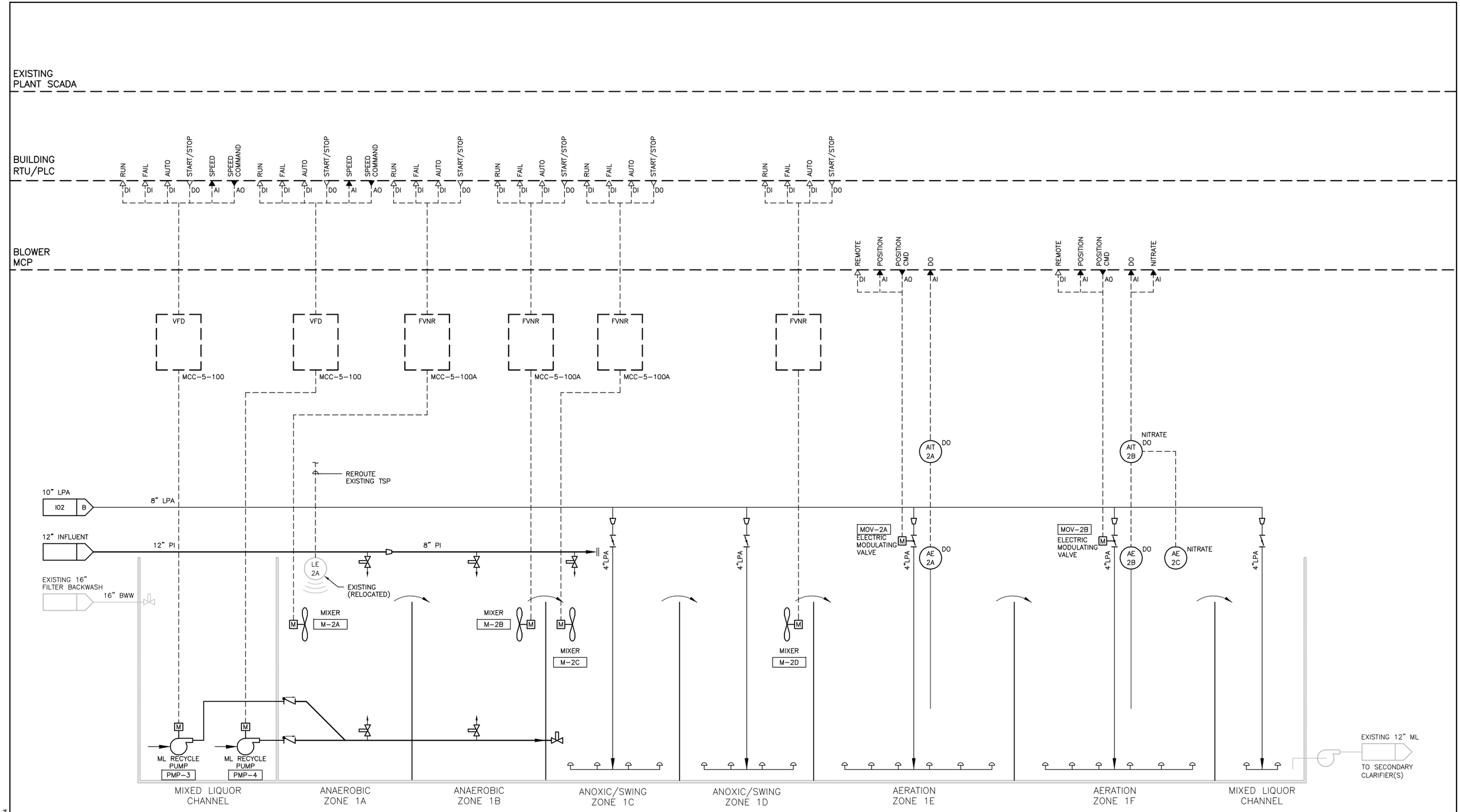

C:\pwworking\sac\d0407107\190077_04

BAR LENGTH ON ORIGINAL DRAWING EQUALS ONE INCH. ADJUST SCALE ACCORDINGLY

HDR Engineering, Inc.

REGISTERED PROFESSIONAL ENGINEER WILLIAM F. ETTLICH NO. 7625 EXP. 06/30/14 STATE OF CALIFORNIA 05-10-13

NO	DATE	REVISION	BY
	05-14-2013	ISSUED FOR BID	CAO

RUSSIAN RIVER COUNTY SANITATION DISTRICT

SCALE: NTS
DATE: 5/10/2013
DRAWN: RJG
REVIEWED:

BIOLOGICAL NUTRIENT REMOVAL

PROCESS AND INSTRUMENTATION DIAGRAM AERATION BASIN 2

FILE NAME: 190077_I04.dwg
CONTRACT NUMBER: 70-713-7M1A
DRAWING NUMBER: I04
SHEET 47 OF 47