SONOMA COUNTY WATER AGENCY

MIRABEL FISH SCREEN AND FISH LADDER REPLACEMENT

ISSUED FOR BIDS

N

STATE MAP

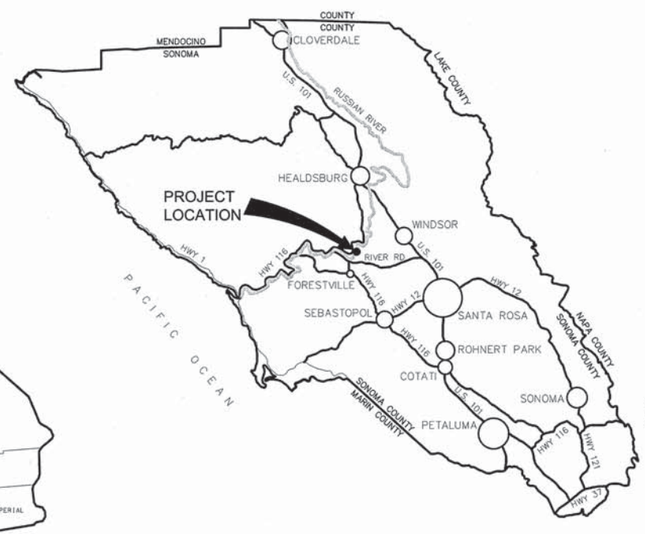

N

VICINITY MAP

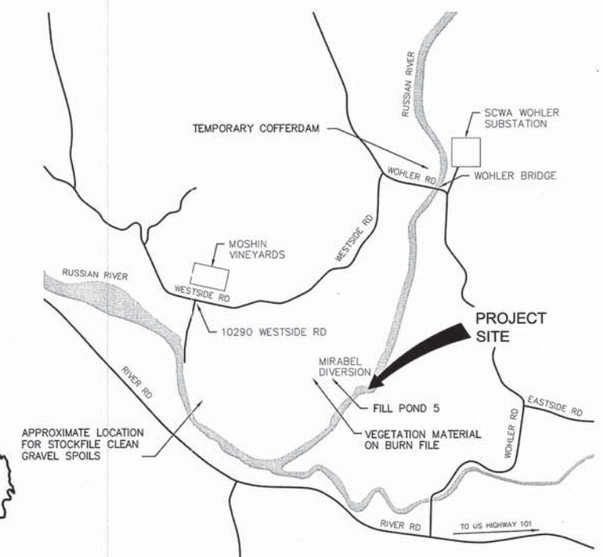

N

LOCATION MAP

DRAWING INDEX

NO.		GENERAL
01	G1	COVER SHEET, LOCATION MAPS AND DRAWING INDEX
02	G2	ABBREVIATIONS
03	G3	LEGENDS AND SYMBOLS
		DEMOLITION
04	D1	SITE DEMOLITION PLAN
05	D2	GENERAL PLAN DEMOLITION
06	D3	FISHWAY SECTIONS DEMOLITION
07	D4	STRUCTURAL PLAN DEMOLITION
08	D5	STRUCTURAL SECTIONS DEMOLITION
09	D6	DIVERSION SECTION DEMOLITION
10	D7	INTAKE PLAN DEMOLITION
11	D8	INTAKE REINFORCEMENT DETAILS DEMOLITION
12	D9	INTAKE METALWORK DEMOLITION
13	D10	CATWALK AND STOP LOGS DEMOLITION
14	D11	PIPING DETAILS DEMOLITION
		CIVIL
15	C1	SITE PLAN
16	C2	GRADING PLAN
17	C3	SITE UTILITY PLAN
18	C4	UPPER ROAD PROFILE
19	C5	LOWER ROAD PROFILE
20	C6	FISH SCREEN PLAN
21	C7	FISHWAY PLAN
22	C8	SITE SECTIONS 1
23	C9	SITE SECTIONS 2
24	C10	SITE SECTIONS 3
25	C11	SITE SECTIONS 4
26	C12	SITE SECTIONS 5
27	C13	SITE SECTIONS 6
28	C14	CIVIL DETAILS 1
29	C15	CIVIL DETAILS 2
30	C16	WOHLER DAM SITE PLAN
31	C17	WOHLER DAM SECTIONS
		STRUCTURAL
32	S1	STANDARD STRUCTURAL NOTES
33	S2	SPECIAL INSPECTION NOTES
34	S3	TYPICAL CONCRETE DETAILS 1
35	S4	TYPICAL CONCRETE DETAILS 2
36	S5	TYPICAL REINFORCING DETAILS
37	S6	TYPICAL GRATING DETAILS
38	S7	TYPICAL STAIR AND RAILING DETAILS 1
39	S8	TYPICAL STAIR AND RAILING DETAILS 2
40	S9	FISH SCREEN AND FISH LADDER KEY PLAN
41	S10	FOUNDATION PLAN AREA 1
42	S11	FOUNDATION PLAN AREA 2
43	S12	TOP DECK PLAN AREA 1
44	S13	TOP DECK PLAN AREA 2
45	S14	TOP DECK PLAN AREA 3
46	S15	ROADWAY PLAN AREA 4
47	S16	STRUCTURAL SECTIONS 1
48	S17	STRUCTURAL SECTIONS 2
49	S18	STRUCTURAL SECTIONS 3
50	S19	STRUCTURAL SECTIONS 4
51	S20	STRUCTURAL SECTIONS 5
52	S21	STRUCTURAL SECTIONS 6
53	S22	STRUCTURAL SECTIONS 7
54	S23	STRUCTURAL SECTIONS 8
55	S24	SECTIONS AND DETAILS 1
56	S25	SECTIONS AND DETAILS 2
57	S26	BEAM, SLAB AND COLUMN DETAILS
58	S27	PILE SCHEDULE AND DETAILS
59	S28	SECTIONS AND DETAILS 3
60	S29	SECTIONS AND DETAILS 4
61	S30	SECTIONS AND DETAILS 5
62	S31	INTAKE SCREEN ELEVATION, SECTIONS AND DETAILS
63	S32	MONITORING AREA PLAN
64	S33	MONITORING AREA DETAILS AND SECTIONS
65	S34	GUIDE SLOT DETAILS 1
66	S35	INTAKE SCREEN BAFFLE ASSEMBLY AND SECTIONS
67	S36	TRASH RACK ELEVATION AND SECTION
68	S37	ATTRACTION FLOW DIFFUSER PLAN, SECTIONS AND DETAILS
69	S41	RETAINING WALL NO. 1 PLAN AND ELEVATION
70	S42	STRUCTURE PLAN NO. 1
71	S43	STRUCTURE PLAN NO. 2
72	S44	STRUCTURE PLAN NO. 3
73	S45	RETAINING WALL DETAILS NO. 1
74	S46	RETAINING WALL DETAILS NO. 2
75	S47	RETAINING WALL DETAILS NO. 3
76	S48	RETAINING WALL DETAILS NO. 4
77	S49	RETAINING WALL DETAILS NO. 5
		ARCHITECTURAL
78	A1	TOP DECK FLOOR AND CODE PLAN AREA 1
79	A2	BOTTOM DECK FLOOR AND CODE PLAN AREA 1
80	A3	ARCHITECTURAL CODE COMPLIANCE NOTES
81	A4	TYPICAL STAIR AND RAILING DETAILS
82	A5	ARCHITECTURAL DETAILS
83	A6	ARCHITECTURAL DETAILS
		MECHANICAL
84	M1	MECHANICAL SITE PLAN
85	M2	CLEANING SYSTEM PLAN, ELEVATION AND SECTION
86	M3	(NOT USED)
87	M4	GATE SCHEDULE
88	M5	PIPING PLAN-U-TUBE PIPING
89	M6	MECHANICAL SECTIONS 1-U-TUBE PIPING
90	M7	MECHANICAL SECTIONS 2-U-TUBE PIPING
		ELECTRICAL
91	E1	ELECTRICAL LEGENDS AND SYMBOLS
92	E2	SINGLE LINE DIAGRAM AND PANEL BOARD SCHEDULE
93	E3	ELECTRICAL SITE PLAN
94	E4	EMERGENCY PUMP SITE PLAN
95	E5	RDS ELECTRICAL PLAN
96	E6	VIEWING AREA ELECTRICAL PLAN
97	E7	ELECTRICAL WIRING DIAGRAMS
98	E8	ELECTRICAL DETAILS 1
99	E9	ELECTRICAL DETAILS 2

BAR LENGTH ON ORIGINAL DRAWING EQUALS ONE INCH. ADJUST SCALE ACCORDINGLY

HDR Fisheries DESIGN CENTER

REGISTERED PROFESSIONAL ENGINEER JONATHON A. MANN C63782 Exp. 9/30/14 CIVIL STATE OF CALIFORNIA

3/17/14

NO.	DATE	REVISION	BY
A	3/17/14	ISSUED FOR BIDS	JM

SONOMA COUNTY WATER AGENCY

SCALE: AS NOTED | DATE: 3/17/14
DRAWN: ACB
REVIEWED:

Sonoma County Water Agency
Mirabel Fish Screen and Fish Ladder Replacement
COVER SHEET, LOCATION MAPS AND DRAWING INDEX

FILE NAME: 164479_g01.dwg
CONTRACT NUMBER: ####
DRAWING NUMBER: G1
SHEET 01 OF 99

C:\pwworking\sec\d0645477\164479_G01

A

A/C	AIR CONDITIONING
A/E	ARCHITECT/ENGINEER
A	ARCHITECTURAL (DWG DISCIPLINE), AMP
AB	ANCHOR BOLT
AC	ALTERNATING CURRENT
ACK	ACKNOWLEDGE
ACP	ACOUSTIC CEILING PANEL, ASPHALTIC CONCRETE PAVEMENT
ADA	AMERICANS WITH DISABILITIES ACT
ADH	ADHESIVE
ADJ	ADJUSTABLE, ADJACENT
AF	AMP FRAME, AMP FUSE
AFF	ABOVE FINISH FLOOR
AFG	ABOVE FINISH GRADE
AGGR	AGGREGATE
AIC	AMPS INTERRUPTING CAPACITY
ALUM	ALUMINUM
ALT	ALTERNATE, ALTITUDE
AMB	AMBIENT
APRX	APPROXIMATE
APVD	APPROVED
ARCH	ARCHITECTURAL
ARV	AIR RELEASE VALVE
ASSY	ASSEMBLY
AT	AMP TRIP
ATC	ACOUSTICAL TILE CEILING
ATM	ATMOSPHERE
ATS	AUTOMATIC TRANSFER SWITCH
AUTO	AUTOMATIC
AUX	AUXILIARY
AVE	AVENUE
AVG	AVERAGE
AWG	AMERICAN WIRE GAGE
AWT	ACOUSTICAL WALL TILE

B

BAL	BALANCE
BC	BASE CABINET, BOTTOM CHORD, BOLT CENTER, BOLT CIRCLE
BD	BOARD
BE	BOTH ENDS, BELL END
BF	BOTH FACES, BOTTOM FACE, BLIND FLANGE, BOARD FEET
BL	BASE LINE
BLDG	BUILDING
BLK	BLOCK
BLKG	BLOCKING
BM	BENCHMARK, BEAM
BOC	BOTTOM OF CONCRETE
BOTR	BOTTOM OF TRENCH DRAIN
BOTT	BOTTOM
BP	BASE PLATE
BRG	BEARING
BRGP	BEARING PLATE
BRKT	BRACKET
BS	BOTH SIDES
BTU	BRITISH THERMAL UNIT
BTW	BETWEEN
BW	BOTH WAYS
BYP	BYPASS

C

C	CHANNEL SHAPE, CENTIGRADE, CONDUIT, CIVIL (DRAWING DISCIPLINE)
CAB	CABINET
CAP	CAPACITY
CAT	CATALOG
CAV	CAVITY
CB	CATCH BASIN
CCB	CONCRETE BLOCK
CCW	COUNTER CLOCKWISE
CDF	CONTROLLED DENSITY FILL
CE	CONCRETE EDGE
CER	CERAMIC
CF	CUBIC FEET (FOOT)
CHFR	CHAMFER
CHD	CHORD
CHH	COMMUNICATION HANDHOLE
CI	CURB INLET
CIP	CAST-IN-PLACE
CIRC	CIRCULATION, CIRCULAR
CJ	CONSTRUCTION JOINT
CKT	CIRCUIT
CL	CENTERLINE, CLASS, CLOSE
CLG	CEILING
CLJ	CONTROL JOINT
CLR	CLEAR
CMH	COMMUNICATION MANHOLE
CMU	CONCRETE MASONRY UNIT
CO	CLEAN OUT, CONCRETE OPENING
COL	COLUMN
COM	COMMON
COMB	COMBINATION
COMM	COMMUNICATION
COMP	COMPOSITION, COMPRESSIBLE, COMPOSITE
CONC	CONCENTRIC, CONCRETE
CONN	CONNECTION
CONST	CONSTRUCTION
CONT	CONTINUOUS
COOR	COORDINATE
CORR	CORROSIVE, CORRUGATED
CP	CONTROL POINT
CPLG	COUPLING
CSK	COUNTERSINK
CT	CERAMIC TILE
CTR	CENTER
CTRL	CONTROL
CVT	CULVERT
CU	COPPER, CUBIC
CWB	CONCRETE WALL BOARD
CW	CLOCKWISE
CY	CUBIC YARD

D

d	PENNY (NAIL MEASURE)
D	DEEP, DIFFUSER
DB	DUCT BANK, DECIBEL, DRY BULB
DBA	DEFORMED BAR ANCHOR
DBL	DOUBLE
DC	DIRECT CURRENT
DEG	DEGREE
DEMO	DEMOLITION
DEP	DEPRESSED
DEPT	DEPARTMENT
DET	DETAIL
DI	DROP INLET, DUCTILE IRON
DIA	DIAMETER
DIAG	DIAGONAL, DIAGRAM
DIFF	DIFFERENTIAL, DIFFERENCE
DIM	DIMENSION
DISCH	DISCHARGE
DIST	DISTANCE, DISTRIBUTION
DIV	DIVISION
DL	DEAD LOAD
DN	DOWN
DO	DISSOLVED OXYGEN, DITTO
DP	DEPTH
DPDT	DOUBLE POLE, DOUBLE THROW
DPST	DOUBLE POLE, SINGLE THROW
DS	DOWN SPOUT
DUP	DUPLICATE
DWG	DRAWING
DWL	DOWEL

E

E	EAST, ELECTRICAL (DWG DISCIPLINE)
EA	EACH, EXHAUST AIR
EC	ELECTRICAL CONTRACTOR
ECC	ECCENTRIC
EDB	ELECTRICAL DUCT BANK
EE	EACH END
EF	EACH FACE
EFF	EFFLUENT, EFFICIENCY
EHH	ELECTRICAL HANDHOLE
EJ	EXPANSION JOINT
EL	ELBOW, ELEVATION
ELEC	ELECTRICAL
EMER	EMERGENCY
EMH	ELECTRICAL MANHOLE
ENCL	ENCLOSURE
ENTR	ENTRANCE
EOP	EDGE OF PAVEMENT
EQ	EQUAL
EQUIP	EQUIPMENT
EQUIV	EQUIVALENT
ES	EACH SIDE, EQUAL SPACE, EMERGENCY SHOWER
EST	ESTIMATE
EW	EACH WAY, EMERGENCY EYE/FACE WASH
EW	EACH WAY
EXC	EXCAVATION
EXH	EXHAUST
EXST	EXISTING
EXP	EXPANSION, EXPOSED
EXT	EXTERIOR, EXTERNAL, EXTENSION

F

FAB	FABRICATE
FB	FLOOR BEAM, FOIL BACK
FBD	FIBERBOARD
FG	FIBERGLASS
FBM	BOARD FOOT MEASURE
FC	FLUSHING CONNECTION
FD	FLOOR DRAIN
FDC	FLEXIBLE DUCT CONNECTION
FDTN	FOUNDATION
FDR	FEEDER
FE	FLANGED END
FEC	FIRE EXTINGUISHER CABINET
FF	FAR FACE, FINISH FLOOR, FLAT FACE
FG	FINISHED GRADE
FIG	FIGURE
FH	FIRE HYDRANT
FIN	FINISH
FL	FLOW, FLOW LINE
FLEX	FLEXIBLE
FLG	FLANGE
FLOR	FLUORESCENT
FLR	FLOOR
FLS	FLASHING, FLUSH
FO	FINISHED OPENING
FNC	FENCE
F/CONC	FACE OF CONCRETE, FACE OF CURB
FPT	FEMALE PIPE THREAD
FR	FRAME
FRP	FIBERGLASS REINFORCED PLASTIC
FRTM	FIRE RETARDANT TREATED MATERIAL
FS	FLOOR SINK, FAR SIDE
FT	FEET, FOOT
FTG	FOOTING, FITTING
FUR	FURRED, FURRING
FURN	FURNITURE, FURNISH
FUT	FUTURE
FV	FACE VELOCITY
FW	FIELD WELD, FIRE WALL
FWD	FORWARD
FWE	FURNISHED WITH EQUIPMENT
FXTR	FIXTURE

G

G	GRILLE, GROUND, GENERAL (DWG DISCIPLINE)
GA	GAGE (METAL THICKNESS)
GAL	GALLON
GALV	GALVANIZED
GB	GRAB BAR, GRADE BREAK
GC	GROOVED COUPLING
GD	GUARD
GEN	GENERAL
GFCI	GROUND FAULT CIRCUIT INTERRUPTER
GFMU	GROUND FACE MASONRY UNIT
GG	GUTTER GRADE
GJ	GROOVED JOINT
GL	GLASS
GLB	GLASS BLOCK
GND	GROUND
GP	GUY POLE
GR	GRADE
GRTG	GRATING
GSB	GYPSUM SHEATHING BOARD
GT	GREASE TRAP
GVL	GRAVEL
GWB	GYPSUM WALLBOARD
GYP	GYPSUM HARDBOARD

H

H	HIGH
HB	HOSE BIB
HBD	HARDBOARD
HC	HANDICAPPED, HORIZONTAL CURVE, HORIZONTAL CENTERLINE
HDR	HEADER
HDW	HARDWARE
HEX	HEXAGONAL
HGR	HANGER
HH	HANDHOLE
HID	HIGH INTENSITY DISCHARGE
HM	HOLLOW METAL
HORIZ	HORIZONTAL
HP	HIGH POINT, HORSEPOWER
HPC	HORIZONTAL POINT OF CURVATURE
HPS	HIGH PRESSURE SODIUM
HPT	HORIZONTAL POINT OF TANGENCY
HR	HOSE REEL, HOUR
HS	HEADED STUD, HIGH STRENGTH
HSS	HOLLOW STRUCTURAL SHAPE
HT	HEIGHT
HTG	HEATING
HV	HIGH VOLTAGE
HVAC	HEATING, VENTILATION & AIR CONDITIONING
HWD	HARDWOOD
HWL	HIGH WATER LEVEL
HYD	HYDRAULIC
HZ	HERTZ, CYCLES PER SECOND

I

I	INSTRUMENTATION (DWG DISCIPLINE)
ID	INSIDE DIAMETER, INTERIOR DIMENSION
IE	INVERT ELEVATION
IF	INSIDE FACE
IH	INTAKE HOOD
IN	INCH
INC	INCLUDE, INCANDESCENT
INSTR	INSTRUMENTATION
INSUL	INSULATION
INT	INTERIOR, INTERSECTION
INTR	INTERMEDIATE, INTERIOR
INV	INVERT
IPS	IRON PIPE SIZE
IPT	INTERNAL PIPE THREAD
IR	INSIDE RADIUS
IRR	IRRIGATION
ISO	ISOMETRIC

J

JB	JUNCTION BOX
JCT	JUNCTION
JF	JOINT FILLER
JST	JOIST
JT	JOINT

K

K	KIP
KCMIL	THOUSAND CIRCULAR MILS
KSI	KIPS PER SQUARE INCH

L

L	ANGLE, LENGTH, LAVATORY
LAD	LADDER
LAM	LAMINATE
LB	LAG BOLT, POUND
LDG	LANDING
LDR	LEADER
LF	LINEAR FOOT
LG	LONG
LH	LEFT HAND
LIN	LINEAR
LIQ	LIQUID
LLH	LONG LEG HORIZONTAL
LLV	LONG LEG VERTICAL
LNG	LONGITUDINAL
LOC	LOCATION
LP	LOW POINT
LPS	LOW PRESSURE SODIUM
LR	LONG RADIUS
LT	LEFT
LTD	LIMITED
LTG	LIGHTING
LTL	LINTEL
LTNG	LIGHTNING
LV	LOW VOLTAGE
LVR	LOUVER
LW	LIGHTWEIGHT
LWC	LIGHTWEIGHT CONCRETE
LWL	LOW WATER LEVEL

M

M	MECHANICAL (DWG DISCIPLINE)
MACH	MACHINED
MAINT	MAINTENANCE
MAN	MANUAL
MATL	MATERIAL
MAX	MAXIMUM
MB	MACHINE BOLT
MBR	MEMBER
MCC	MOTOR CONTROL CENTER
MCJ	MASONRY CONTROL JOINT
MECH	MECHANICAL
MED	MEDIUM
MFR	MANUFACTURER
MH	MANHOLE, METAL HALIDE
MIN	MINIMUM
MIR	MIRROR
MISC	MISCELLANEOUS
MJ	MECHANICAL JOINT
MLO	MAIN LUGS ONLY
MMB	MEMBRANE
MO	MASONRY OPENING
MOD	MODULAR, MODIFY
MON	MONUMENT
MPT	MALE PIPE THREAD
MRGWB	MOISTURE RESISTANT GYPSUM WALLBOARD
MSL	MEAN SEA LEVEL
MT	MOUNT
MU	MASONRY UNIT
MULL	MULLION
MV	MEDIUM VOLTAGE
MW	MONITORING WELL

N

N	NORTH, NEUTRAL
NA	NOT APPLICABLE
NC	NORMALLY CLOSED
NEC	NATIONAL ELECTRICAL CODE
NEG	NEGATIVE
NF	NEAR FACE, NON-FUSED
NIC	NOT IN CONTRACT
NO	NORMALLY OPEN, NUMBER
NOM	NOMINAL
NPS	NOMINAL PIPE SIZE
NPT	NATIONAL PIPE THREAD
NS	NEAR SIDE
NTS	NOT TO SCALE

O

OA	OUTSIDE AIR, OVERALL
OC	ON CENTER
OCPD	OVER CURRENT PROTECTION DEVICE
OD	OUTSIDE DIAMETER
OED	OPEN END DUCT
OF	OUTSIDE FACE, OFFICE FURNISHING
OF	OVERFLOW
OG	ORIGINAL GROUND
OH	OVERHEAD
OL	OVERLOAD
OPNG	OPENING
OPP	OPPOSITE
OPT	OPTIONAL
OR	OUTSIDE RADIUS
ORD	OVERFLOW ROOF DRAIN
ORIG	ORIGINAL
OZ	OUNCE

P

P	PAINT, PROCESS (DWG DISCIPLINE)
PA	PUBLIC ADDRESS
PAR	PARALLEL, PARAPET
PB	PANIC BAR, PULL BOX
PBD	PARTICLE BOARD
PC	POINT OF CURVE, PIECE, PRECAST
PCC	POINT OF COMPOUND CURVATURE
PCF	POUNDS PER CUBIC FOOT
PCT	PERCENT
PE	PLAIN END
PED	PEDESTAL
PEN	PENETRATION
PERF	PERFORATED
PERM	PERMANENT
PERP	PERPENDICULAR
PF	POWER FACTOR
PH	PHASE
PI	POINT OF INTERSECTION
PKG	PACKAGE
PL	PLATE, PROPERTY LINE
PLF	POUNDS PER LINEAR FOOT
PM	POWER MONITOR
PNEU	PNEUMATIC
POS	POSITIVE, POSITION
PP	POLYPROPYLENE, POWER POLE
PRC	POINT OF REVERSE CURVATURE
PREF	PREFINISHED
PREFAB	PREFABRICATED
PRELIM	PRELIMINARY
PRES	PRESSURE
PRI	PRIMARY
PROP	PROPERTY
PROT	PROTECTION
PS	PIPE SUPPORT
PSF	POUNDS PER SQUARE FOOT
PSI	POUNDS PER SQUARE INCH
PSIA	POUNDS PER SQUARE INCH ABSOLUTE
PSIG	POUNDS PER SQUARE INCH GAGE
PT	POINT, POINT OF TANGENCY
PVC	POLYVINYL CHLORIDE
PWD	PLYWOOD
PWJ	PLYWOOD WEB JOIST
PZ	PIEZOMETER

Q

Q	RATE OF FLOW
QT	QUARRY TILE
QTR	QUARTER
QTY	QUANTITY
QUAL	QUALITY

R

R	RADIUS, REGISTER, RISER
RCPT	RECEPTACLE
REC	RECESS
RECD	RECEIVED
RECT	RECTANGULAR
RED	REDUCER
REF	REFERENCE
REINF	REINFORCING
REM	REMOVE
REQD	REQUIRED
RESIL	RESILIENT
RET	RETAINING, RETURN
REV	REVISION, REVERSE
RF	RESILIENT FLOORING
RFG	ROOFING
RFL	REFLECTED, REFLECTOR
RGS	RIGID GALVANIZED STEEL
RGS-PVC	PVC COATED RGS
RH	RELIEF HOOD, RIGHT HAND, RELATIVE HUMIDITY
RND	ROUND
RNG	RUNNING
RO	ROUGH OPENING
ROW	RIGHT OF WAY
RPM	REVOLUTIONS PER MINUTE
RR	RAILROAD
RSP	ROCK SLOPE PROTECTION
RT	RIGHT
RVSS	REDUCED VOLTAGE SOUND STATE
RVT	RESILIENT VINYL TILE

S

S	SOUTH, SINK, STRUCTURAL (DWG DISCIPLINE)
SA	SUPPLY AIR
SAN	SANITARY
SB	SPLASH BLOCK
SC	SOLID CORE
SCH	SCHEDULE
SCHEM	SCHEMATIC
SCN	SCREEN
STL	STEEL
SEC	SECONDARY, SECONDS
SECT	SECTION
SEP	SEPARATE
SF	SQUARE FOOT
SG	SHEET GLASS, SEALANT GROOVE
SH	SHOWER
SHT	SHEET
SHTG	SHEATHING
SIL	SILENCE
SIM	SIMILAR
SL	SLOPE
SLTD	SLOTTED
SLV	SLEEVE
SMLS	SEAMLESS
SOG	SLAB ON GRADE
SP	SOUNDPROOF, STANDPIPE
SPD	SURGE PROTECTION DEVICE
SPEC	SPECIFICATION
SPLY	SUPPLY
SPST	SINGLE POLE SINGLE THROW
SQ	SQUARE
SR	SHORT RADIUS
SS	STAINLESS STEEL
ST	STREET
STA	STATION
STD	STANDARD
STIF	STIFFENER
STIR	STIRRUP
STL	STEEL
STOR	STORAGE
STR	STRUCTURAL, STRAIGHT
SUB	SUBSTITUTE
SUC	SUCTION
SUSP	SUSPENDED
SY	SQUARE YARD
SYM	SYMBOL
SYMM	SYMMETRICAL
SYN	SYNTHETIC
SYS	SYSTEM

T

T&B	TOP AND BOTTOM
T&G	TONGUE AND GROOVE
T	TILE, TREAD
TAN	TANGENT
TBM	TEMPORARY BENCHMARK
TC	TRAY CABLE
TCE	TEMPORARY CONSTRUCTION EASEMENT
TEMP	TEMPORARY, TEMPERATURE
THD	THREAD
THK	THICK
THRESH	THRESHOLD
THRU	THROUGH
TJB	TERMINAL JUNCTION BOX
T/BANK	TOP OF BANK
T/BEAM	TOP OF BEAM
T/BOLT	TOP OF BOLT
T/CONC	TOP OF CONCRETE
T/FTG	TOP OF FOOTING
T/GRTG	TOP OF GRATING
TOL	TOLERANCE
T/	TOP OF
TOC	TOP OF CONCRETE
TOPO	TOPOGRAPHY
TOS	TOP OF STEEL
TOW	TOP OF WALL
TP	TOILET PARTITION, TELEPHONE POLE, TOE PLATE, TRAP PRIMER
TR	TRANSOM
TRANS	TRANSITION
TRD	TRENCH DRAIN
TYP	TYPICAL

U

UG	UNDERGROUND
UHMW	ULTRA HIGH MOLECULAR WEIGHT
ULT	ULTIMATE
UNFN	UNFINISHED
UNO	UNLESS NOTED OTHERWISE
UTIL	UTILITY

V

V	VENT, VELOCITY, VOLT
VA	VOLT AMPERE
VAC	VACUUM
VAR	VARNISH, VARIABLE, VOLT AMPERES REACTIVE
VB	VAPOR BARRIER, VINYL BASE,
VC	VERTICAL CURVE
VCT	VINYL COMPOSITION TILE, VERTICAL CENTERLINE
VEL	VELOCITY
VENT	VENTILATION
VERT	VERTICAL
VIN	VINYL
VOL	VOLUME
VPC	VERTICAL POINT OF CURVATURE
VPI	VERTICAL POINT OF INTERSECTION
VPT	VERTICAL POINT OF TANGENCY
VWC	VINYL WALL COVERING

W

W	WATT, WEST, WIDE, WINDOW, WIRE, WIDE FLANGE BEAM
WC	WATER CLOSET, WATER COLUMN
WD	WOOD, WIDTH
WG	WATER GAGE
WH	WALL HYDRANT, WEEP HOLE
WI	WROUGHT IRON
WL	WATER LEVEL
WM	WIRE MESH
WP	WATERPROOF, WORKING POINT
WS	WATERSTOP, WATER SURFACE
WT	WEIGHT, WATER TIGHT
WWF	WELDED WIRE FABRIC

X

XFMR	TRANSFORMER
XP	EXPLOSION PROOF
XS	EXTRA STRONG
XXS	DOUBLE EXTRA STRONG
XSECT	CROSS SECTION

Y

YH	YARD HYDRANT
YS	YIELD STRENGTH

GENERAL NOTES:

1. THESE ABBREVIATIONS APPLY TO THE ENTIRE SET OF CONTRACT DRAWINGS
2. LISTING OF ABBREVIATIONS DOES NOT IMPLY ALL ABBREVIATIONS ARE USED IN THE CONTRACT DRAWINGS.
3. ABBREVIATIONS SHOWN ON THIS DRAWING INCLUDE VARIATIONS OF THE WORD. (I.E. "MOD" MAY MEAN MODIFY OR MODIFICATION, "INC" MAY MEAN INCLUDED OR INCLUDING, "REINF" MAY MEAN EITHER REINFORCE OR REINFORCING.)
4. SEE PROJECT EQUIPMENT AND PIPING SYSTEMS DRAWINGS FOR SYMBOLS AND ABBREVIATIONS SPECIFIC TO THE PROJECT.

BAR LENGTH ON ORIGINAL DRAWING EQUALS ONE INCH. ADJUST SCALE ACCORDINGLY

HDR Fisheries DESIGN CENTER

REGISTERED PROFESSIONAL ENGINEER JONATHON A. MANN C63782 Exp. 9/30/14 CIVIL STATE OF CALIFORNIA

3/17/14

NO.	DATE	REVISION	BY
A	3/17/14	ISSUED FOR BIDS	JM

SONOMA COUNTY WATER AGENCY

SCALE: AS NOTED | DATE: 3/17/14
DRAWN: ACB
REVIEWED:

Sonoma County Water Agency
Mirabel Fish Screen and Fish Ladder Replacement
ABBREVIATIONS

FILE NAME: 164479_g02.dwg
CONTRACT NUMBER: ####
DRAWING NUMBER: G2
SHEET 02 OF 99

C:\pwworking\sea\d0645477\164479_G02

SITE PLAN SYMBOLOGY

- EMBANKMENT SLOPE
- 50.5 — CONTOUR
- VEGETATION
- CO — CLEAN OUT
- MH — MANHOLE
- MW — MONITORING WELL
- AREA DRAIN
- CB — STORM DRAIN CATCH BASIN
- UV — UTILITY VAULT
- PP — POWER POLE
- TP — TELEPHONE POLE
- FH — FIRE HYDRANT
- YH–X — YARD HYDRANT
- X 75.5 — EXISTING SPOT ELEVATION
- 75.8 — FINISHED SPOT ELEVATION
- HORIZONTAL CP–X, CONTROL POINT
- BENCHMARK
- TH–"X" — IDENTIFICATION AND APPROXIMATE LOCATION OF SOIL TEST HOLE
- DOWNGUY
- REMOVE EXISTING TREE(S)
- DEMOLITION OF UTILITY OR STRUCTURE

NOTES:

1. UTILITIES THAT ARE SUSPENDED ABOVE GRADE ARE DESIGNATED BY THE PREFIX "OH".

- OHE — OVERHEAD ELECTRICAL
- U/E — UNDERGROUND ELECTRICAL
- FO — FIBER OPTIC
- W — WATER LINE
- C — COMMUNICATION
- HANDRAIL
- PIPELINE
- LARGE PIPELINE
- PIPELINE BENEATH CONCRETE OR STRUCTURE
- RAILROAD
- DRAINAGE FLOW
- NATURAL WATERWAY
- X — X — CHAIN LINK FENCE
- X — X — FIELD FENCE
- PROPERTY LINE
- CENTERLINE
- RB — ROCK BERM
- SF — SILT FENCE

BAR LENGTH ON ORIGINAL DRAWING EQUALS ONE INCH. ADJUST SCALE ACCORDINGLY

HDR Fisheries DESIGN CENTER

PIPING SYMBOLOGY

NOTES:

1. VALVE TYPES FOR VALVES 4" AND LARGER ARE INDICATED BY SYMBOLOGY SHOWN BELOW. VALVES 3–1/2" AND SMALLER MAY BE SHOWN WITH GATE VALVE SYMBOL

   REGARDLESS OF VALVE TYPE – REFER TO SPECIFICATIONS FOR REQUIREMENTS.

2. SYMBOLOGY SHOWN IS FOR SINGLE LINE PIPING. DOUBLE LINE PIPING SYMBOLS ARE SIMILAR.

VALVES

- GATE VALVE
- GLOBE VALVE
- BALL VALVE
- CHECK VALVE
- DOUBLE DISK CHECK VALVE
- BALL CHECK VALVE
- BUTTERFLY VALVE
- DIAPHRAGM VALVE
- PINCH VALVE
- KNIFE GATE VALVE
- OR — PRESSURE RELIEF VALVE
- PLUG VALVE
- NEEDLE VALVE
- PRESSURE REDUCING VALVE
- X — AIR RELIEF / VACUUM VALVE A = AIR RELIEF V = VACUUM
- PRESSURE REGULATING VALVE
- THREE WAY BALL VALVE
- THREE WAY PLUG VALVE
- GAS PRESSURE REGULATING VALVE

MISCELLANEOUS

- VARIABLE AREA METER
- ROTAMETER
- UNION
- WYE–STRAINER LINE SIZE CHANGE (CONCENTRIC REDUCER)
- FLEXIBLE HOSE OR TUBING
- FLEXIBLE PIPING CONNECTION
- LINE SIZE CHANGE (CONCENTRIC REDUCER)
- LINE SIZE CHANGE (ECCENTRIC REDUCER)
- LINE TURNING DOWN
- LINE TURNING UP
- BLIND FLANGE
- PIPE JOINT (SEE SPECS FOR REQUIREMENTS)
- MECHANICAL PIPE JOINT
- GROOVED COUPLING (VICTAULIC OR EQUAL)
- SLEEVE TYPE COUPLING
- FLANGED COUPLING ADAPTER (FCA)
- FLEXIBLE CONNECTION
- HARNESSED MECHANICAL COUPLING

MISCELLANEOUS (CONTINUED)

- PRESSURE GAGE (W/COCK)
- TRAP
- QUICK DISCONNECT CAM & GROOVE COUPLING
- CAP or PLUG
- CO — INTERIOR CLEANOUT
- HB–X — HOSE VALVE, HOSE BIBB OR FLUSHING CONNECTION
- HOSE RACK
- FLOOR DRAIN
- PIPE IN SECTION
- BU — BELL UP (PLAN)
- BU — BELL UP (SECTION OR SCHEMATIC)
- D — DRAIN (SECTION OR SCHEMATIC)
- ATA — AIR TOOL ASSEMBLY
- AVS — AUTOMATIC VALVE STATION
- PRS — PRESSURE REDUCING STATION

PLUMBING PIPING:

- VT — VENT
- W — WATER

MATERIALS IN PLAN/SECTION

- DEMOLITION
- CONCRETE
- CONCRETE FILL
- MASONRY (CMU)
- BRICK (SECTION)
- ASPHALT
- GRANULAR FILL
- SAND
- EARTH
- METAL (SECTION)
- GRATING (PLAN)
- CHECKERED PLATE
- BRICK (PLAN)
- RIGID INSULATION
- BATT INSULATION
- WOOD – CONTINUOUS
- WOOD – NON CONTINUOUS
- PLYWOOD

REGISTERED PROFESSIONAL ENGINEER JONATHON A. MARKS C63782 Exp. 9/30/14 CIVIL STATE OF CALIFORNIA 3/17/14

GENERAL SYMBOLOGY

PLAN 1/4" = 1'–0"

ARROW INDICATES DIRECTION OF PLAN NORTH — N

SECTION LETTER

FLAG INDICATES DIRECTION OF SECTION CUT

X XXXX

* DRAWING WHERE SECTION VIEW IS LOCATED

* DRAWING WHERE SECTION VIEW IS CUT

SECTION CUT MARKER

SECTION 3/8" = 1'–0"

SECTION LETTER — X XXXX

* DRAWING WHERE SECTION VIEW IS FIRST CUT

* DRAWING WHERE SECTION VIEW IS LOCATED

X XX — DETAIL NUMBER

* DRAWING WHERE DETAIL IS LOCATED

DETAIL MARKER

DETAIL 3" = 1'–0"

DETAIL NUMBER — X XXXX

* DRAWING WHERE DETAIL WAS TAKEN

* DRAWING WHERE DETAIL IS LOCATED

ELEVATION LETTER

ARROW INDICATES POINT OF VIEW

X XXXX

* DRAWING WHERE ELEVATION IS LOCATED

* DRAWING WHERE ELEVATION IS CUT

SINGLE ELEVATION OR PHOTO MARKER

ELEVATION LETTER

ARROW INDICATES POINT OF VIEW ELEVATION

X X X X XX

INDICATES DRAWING WHERE ELEVATION IS LOCATED

MULTIPLE ELEVATION OR PHOTO MARKER

ELEVATION IDENTIFICATION LETTER

ELEVATION 3" = 1'–0"

X XXXX

* DRAWING WHERE POINT OF VIEW MARKER CAN BE FOUND

* DRAWING WHERE ELEVATION VIEW CAN BE FOUND

* IF PLAN AND SECTION, OR DETAIL CALL–OUT AND DETAIL ARE SHOWN ON SAME DRAWING, DRAWING NUMBER IS REPLACED BY A LINE (–).

DESCRIPTION

PRE–CAST MANHOLE

02515X01

SPECIFICATION SECTION AND DETAIL NUMBER

STANDARD DETAIL MARKER

KEYNOTE NUMBER

X

KEYNOTE DESIGNATION

IDENTIFICATION SYMBOLOGY

PIPING:

FIGURE		EXAMPLE
LINE SIZE	12 SD	12"
SERVICE		STORM DRAIN

PIPE SERVICES:

A	AIR
AQW	AQUIFER WATER
AWS	AUXILIARY WATER SUPPLY
D	DRAIN
FM	FORCE MAIN
RW	RIVER WATER
SD	STORM DRAIN
V	VENT

GENERAL NOTES:

1. THIS IS A STANDARD DRAWING SHOWING COMMON SYMBOLOGY. ALL SYMBOLS ARE NOT NECESSARILY USED ON THIS PROJECT.
2. SCREENING OR SHADING OF WORK IS USED TO INDICATE EXISTING COMPONENTS OR TO DE–EMPHASIZE PROPOSED IMPROVEMENTS TO HIGHLIGHT SELECTED TRADE WORK. REFER TO CONTEXT OF EACH DRAWING FOR USAGE.

NO.	DATE	REVISION	BY
A	3/17/14	ISSUED FOR BIDS	JM

SONOMA COUNTY WATER AGENCY

SCALE: AS NOTED | DATE: 3/17/14
DRAWN: ACB
REVIEWED:

Sonoma County Water Agency

Mirabel Fish Screen and Fish Ladder Replacement

LEGENDS AND SYMBOLS

FILE NAME: 164479_g03.dwg
CONTRACT NUMBER: ####
DRAWING NUMBER: G3
SHEET 03 OF 99

C:\pwworking\sea\d0645477\164479_003

N 1944814.00
E 6307816.82

N 1944923.41
E 6307857.67

UTILITY TRENCH 5

REMOVE EXIST 4" FLOW METER & RELOCATE TO 6" FORCEMAIN UTILITY VAULT; PER 6/D1 C1

FIBER OPTIC CROSSING CONDUIT

UTILITY TRENCH 1

N 1945291.72
E 6307966.92

APPROXIMATE LIMITS OF CLEARING & GRUBBING

N 1945380.79
E 6308018.29

REMOVE EXIST TREES AS REQD FOR CONSTRUCTION/EXCAVATION, TYP

N 1945092.86
E 6307934.05

UTILITY TRENCH 4

EXISTING DIRECT BURY FIBER OPTIC CABLE

UTILITY TRENCH 3

UTILITY TRENCH 3 TO BE ABANDONED

UTILITY TRENCH 6

EXISTING WETWELL AND PIPING TO BE REMOVED. EXISTING DAM DRAIN PUMP TO BE REMOVED AND PROVIDED TO OWNER

SEE SHEET S21 FOR LIMITS OF PUMP INTAKE DEMOLITION

DEMO REMAIN

PUMP BYPASS REMAIN DEMO

ABANDONED INTAKE REMAIN DEMO

PUMP INTAKE REMAIN DEMO

UTILITY TRENCH 2

EXIST UTILITY TRENCH 2 TO BE ABANDONED

N 1944800.18
E 6307932.91

APPROXIMATE LIMITS OF CLEARING & GRUBBING

N 1944861.17
E 6307990.15

EXISTING EMERGENCY PUMP STATION LOCKOUT SWITCHES TO BE RELOCATED, SEE SHEET E4

N 1945359.41
E 6308072.23

EXISTING WATER QUALITY PROBE & CABLE TO BE REMOVED AND PROVIDED TO OWNER

N 1945236.46
E 6308108.03

EXISTING 8" SCREENS WASHWATER TO BE ABANDONED

8" STEEL PIPE AND 1 1/4" CONDUIT CROSSING TO BE REMOVED AS REQUIRED

WEST FISHWAY EXIT

EMERGENCY PUMP STATION, PROTECT IN PLACE

(3) EXISTING 18" EMERGENCY PIPES TO BE REMOVED TO LIMITS SHOWN & RELOCATED PER SHEET C9

N 1945034.02
E 6308054.74

36" STEEL ATTRACTANT PIPE TO BE REMOVED

INTAKE STRUCTURE WITH SCREENS TO BE REMOVED

APPROXIMATE LIMITS OF CLEARING & GRUBBING

WEST FISHWAY ENTRANCE

WEST FISHWAY TO BE PARTIALLY REMOVED AS SHOWN ON DEMO SHEETS

UTILITY BOX TO BE REMOVED

RUSSIAN RIVER

RUSSIAN RIVER

SEE SHEET D2

INFLATABLE RUBBER DAM CONCRETE FOUNDATION TO REMAIN

EXISTING BURNED SHEET PILEDIVERSION CHANNEL

UTILITY TRENCH 1
20" AQ WATERLINE
(6) 1" ELEC CONDUITS
(4) 2" ELEC CONDUITS
(2) 1 1/4" ELEC CONDUITS
1 1/4" AIRLINE

UTILITY TRENCH 2
3" DISCHARGE DAM
1 1/4" ELEC CONDUIT
1 1/4" AIRLINE

UTILITY TRENCH 3
2" WATERLINE
(4) 1" ELEC CONDUITS
2" ELEC CONDUIT
(2) 1/4" ELEC CONDUIT
2" AIRLINE

UTILITY TRENCH 4
(3) 2" ELEC CONDUITS

UTILITY TRENCH 5
(2) 1" ELEC CONDUITS
3" WATER FROM DAM

UTILITY TRENCH 6
4" WATER INLET-OUTLET
2" WATER INLET-OUTLET
2" VALVE CONTROL
2" DRAIN
1-1/4" WATER SENSING LINE
1-1/4" UPSTREAM WATER SENSING LINE

DEMOLITION PLAN

1 / D1

0 20 40 60 FT

SCALE: 1"=20'

N

BAR LENGTH ON ORIGINAL DRAWING EQUALS ONE INCH. ADJUST SCALE ACCORDINGLY

HDR Fisheries DESIGN CENTER

REGISTERED PROFESSIONAL ENGINEER CHANCE M. JONES 68374 Exp. 9/30/15 CIVIL STATE OF CALIFORNIA

3/17/14

NO.	DATE	REVISION	BY
A	3/17/14	ISSUED FOR BIDS	JM

SONOMA COUNTY WATER AGENCY

SCALE: AS NOTED
DATE: 3/17/14
DRAWN: ACB
REVIEWED:

Sonoma County Water Agency

Mirabel Fish Screen and Fish Ladder Replacement

SITE DEMOLITION PLAN

FILE NAME: 164479_d01.dwg
CONTRACT NUMBER: ####
DRAWING NUMBER: D1
SHEET 04 OF 99

C:\pwworking\sea\d0645506\164479_D01

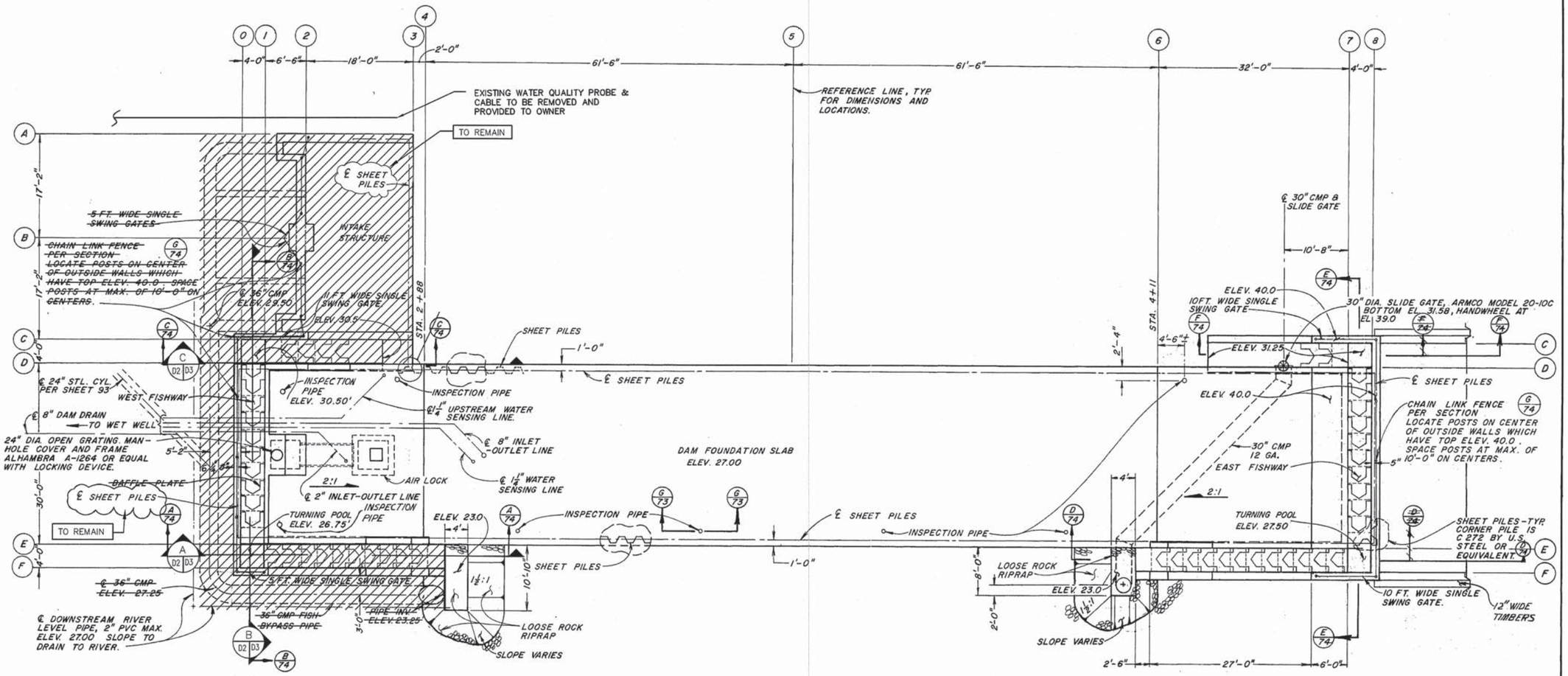

NOTE:
SEE SHEET NO. 93 FOR CONTINUATION OF PIPING.

No.	DATE	REVISION	By
		AS BUILT Date 6-7-77	

RUSSIAN RIVER-COTATI INTERTIE PROJECT
WOHLER DAM & DIVERSION
GENERAL PLAN

SCALE: 1/8" = 1'-0" | APPROVED: CHIEF ENGINEER RE 8271 | DRAWN SKMc
DATE: SEPT. 20, 1974 | CHECKED

SONOMA COUNTY WATER AGENCY

DESIGNED RE 19161 | SUBMITTED RE 10196 | DRAWING NUMBER 60-5-102.209

SHEET NO. 73 PH27-4D

BAR LENGTH ON ORIGINAL DRAWING EQUALS ONE INCH. ADJUST SCALE ACCORDINGLY

HDR Fisheries DESIGN CENTER

REGISTERED PROFESSIONAL ENGINEER LANCE M. JONES 68374 Exp. 9/30/15 CIVIL STATE OF CALIFORNIA 3/17/14

NO.	DATE	REVISION	BY
A	3/17/14	ISSUED FOR BIDS	JM

SONOMA COUNTY WATER AGENCY

SCALE: AS NOTED | DATE: 3/17/14
DRAWN: ACB
REVIEWED:

Sonoma County Water Agency
Mirabel Fish Screen and Fish Ladder Replacement
GENERAL PLAN DEMOLITION

FILE NAME: 164479_d02.dwg
CONTRACT NUMBER: ####
DRAWING NUMBER: D2
SHEET 05 OF 99

C:\pwworking\sac\d0645506\164479_D02

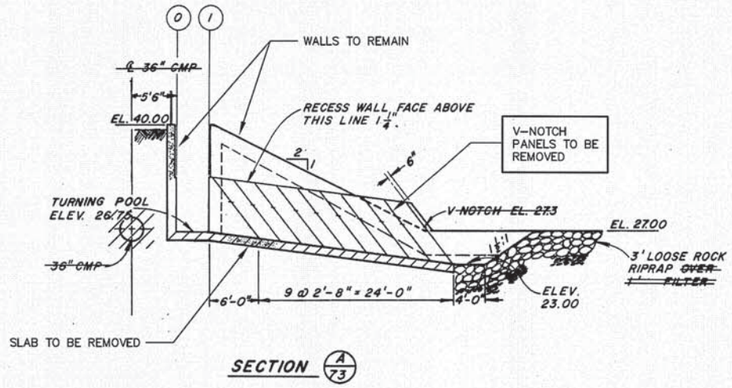

SECTION A/73

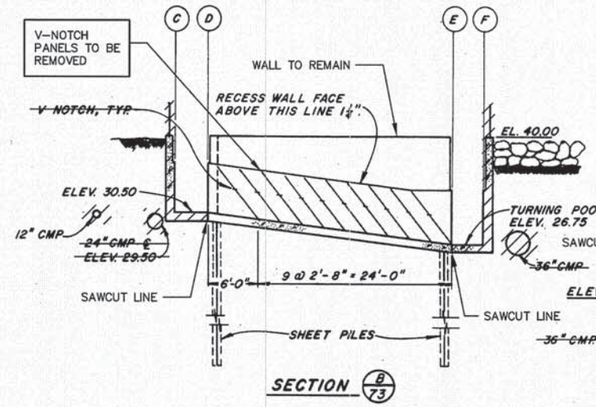

SECTION B/73

WEST FISHWAY

SCALE 1/8" = 1'

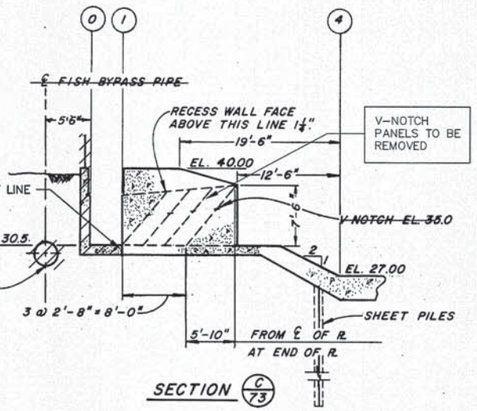

SECTION C/73

SECTION A NTS D2 D3

SECTION B NTS D2 D3

SECTION C NTS D2 D3

No.	DATE	REVISION	By

AS BUILT
Date 6-7-77

RUSSIAN RIVER-COTATI INTERTIE PROJECT
WOHLER DAM & DIVERSION
FISHWAY SECTIONS

SCALE: 1/8" = 1' | APPROVED CHIEF ENGINEER RE 8271 | DRAWN SKMc
DATE: AUG. 11, 1974 | CHECKED
SONOMA COUNTY WATER AGENCY
DESIGNED RE 19161 | SUBMITTED RE 10196 | DRAWING NUMBER 60-5-102.210

SHEET NO. 74 PH 27-4D

MICROFILMED

BAR LENGTH ON ORIGINAL DRAWING EQUALS ONE INCH. ADJUST SCALE ACCORDINGLY

HDR Fisheries DESIGN CENTER

REGISTERED PROFESSIONAL ENGINEER
LANCE M. JONES
68374
Exp. 9/30/15
CIVIL
STATE OF CALIFORNIA
3/17/14

NO.	DATE	REVISION	BY
A	3/17/14	ISSUED FOR BIDS	JM

SONOMA COUNTY WATER AGENCY

SCALE: AS NOTED | DATE: 3/17/14
DRAWN: ACB
REVIEWED:

Sonoma County Water Agency
Mirabel Fish Screen and Fish Ladder Replacement
FISHWAY SECTIONS DEMOLITION

FILE NAME: 164479_d03.dwg
CONTRACT NUMBER: ####
DRAWING NUMBER: D3
SHEET 06 OF 99

C:\pwworking\sea\d0645506\164479_D03

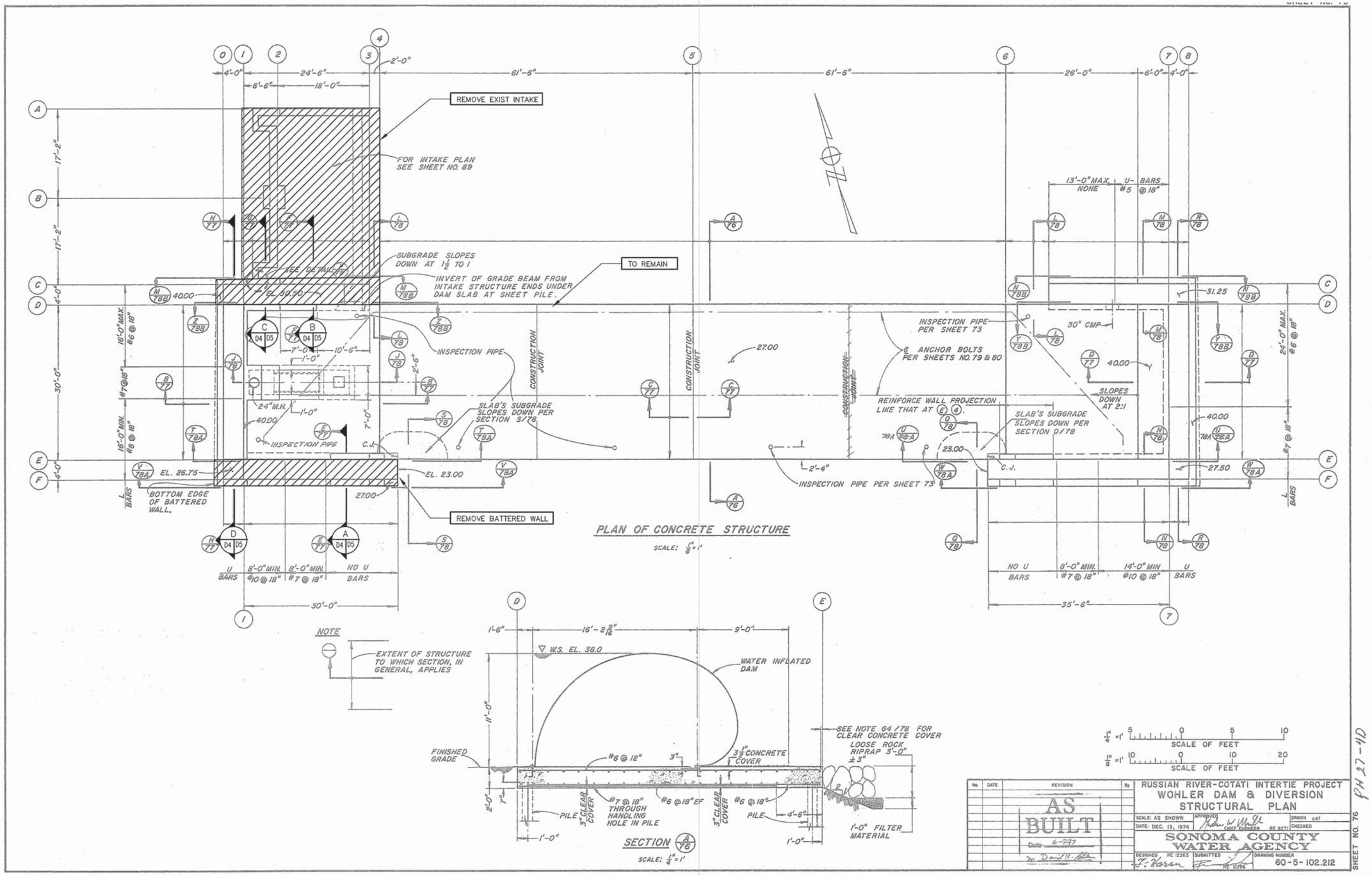

BAR LENGTH ON ORIGINAL DRAWING EQUALS ONE INCH. ADJUST SCALE ACCORDINGLY

HDR Fisheries DESIGN CENTER

REGISTERED PROFESSIONAL ENGINEER LANCE M. JONES 68374 Exp. 9/30/15 CIVIL STATE OF CALIFORNIA 3/17/14

NO.	DATE	REVISION	BY
A	3/17/14	ISSUED FOR BIDS	JM

SONOMA COUNTY WATER AGENCY

SCALE: AS NOTED | DATE: 3/17/14
DRAWN: ACB
REVIEWED:

Sonoma County Water Agency
Mirabel Fish Screen and Fish Ladder Replacement
STRUCTURAL PLAN DEMOLITION

FILE NAME: 164479_d04.dwg
CONTRACT NUMBER: ####
DRAWING NUMBER: D4
SHEET 07 OF 99

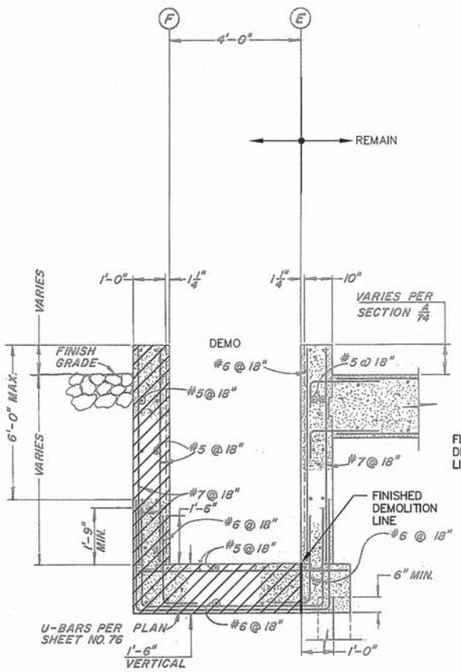

SECTION A
NTS
D4 | D5

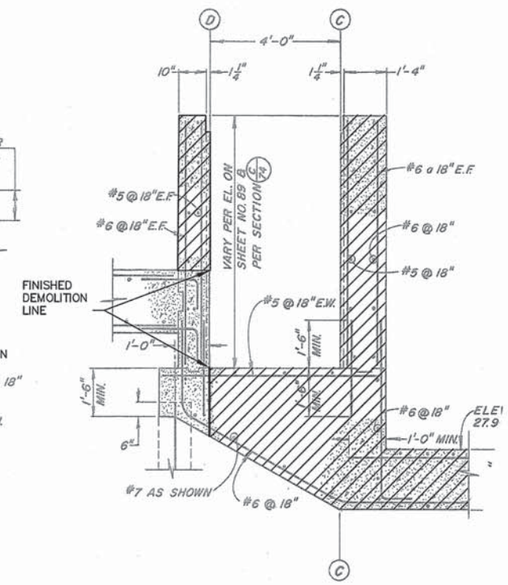

SECTION B
NTS
D4 | D5

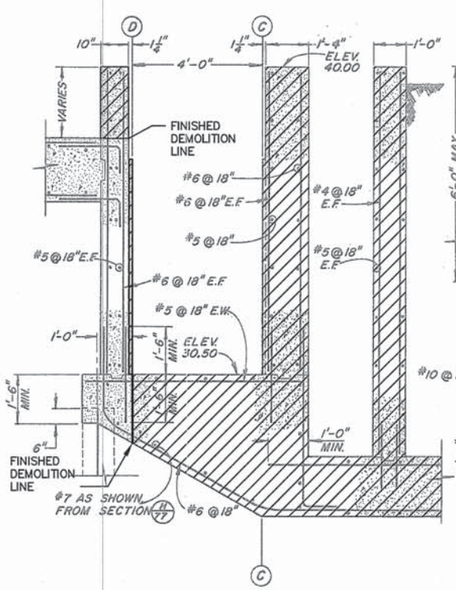

SECTION C
NTS
D4 | D5

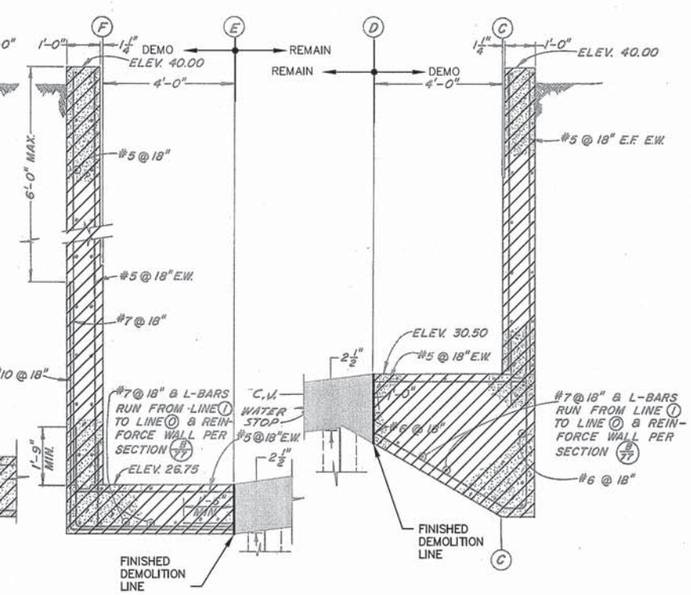

SECTION D
NTS
D4 | D5

No.	DATE	REVISION	By
		AS BUILT Date 6-7-77	

RUSSIAN RIVER – COTATI INTERTIE PROJECT
WOHLER DAM AND DIVERSION
STRUCTURAL SECTIONS

SCALE: AS SHOWN | APPROVED: CHIEF ENGINEER RE 8271 | DRAWN adf
DATE: DEC. 20, 1974 | CHECKED

SONOMA COUNTY WATER AGENCY

DESIGNED RE 12363 | SUBMITTED RE 10196 | DRAWING NUMBER 60-5-102.213

SHEET NO. 77 FM 27-40

MICROFILMED

BAR LENGTH ON ORIGINAL DRAWING EQUALS ONE INCH. ADJUST SCALE ACCORDINGLY

HDR Fisheries DESIGN CENTER

REGISTERED PROFESSIONAL ENGINEER LANCE M. JONES 68374 Exp. 9/30/15 CIVIL STATE OF CALIFORNIA 3/17/14

NO.	DATE	REVISION	BY
A	3/17/14	ISSUED FOR BIDS	JM

SONOMA COUNTY WATER AGENCY

SCALE: AS NOTED | DATE: 3/17/14
DRAWN: ACB
REVIEWED:

Sonoma County Water Agency
Mirabel Fish Screen and Fish Ladder Replacement
STRUCTURAL SECTIONS DEMOLITION

FILE NAME: 164479_d05.dwg
CONTRACT NUMBER: ####
DRAWING NUMBER: D5
SHEET 08 OF 99

C:\pwworking\sec\d0645506\164479_D05

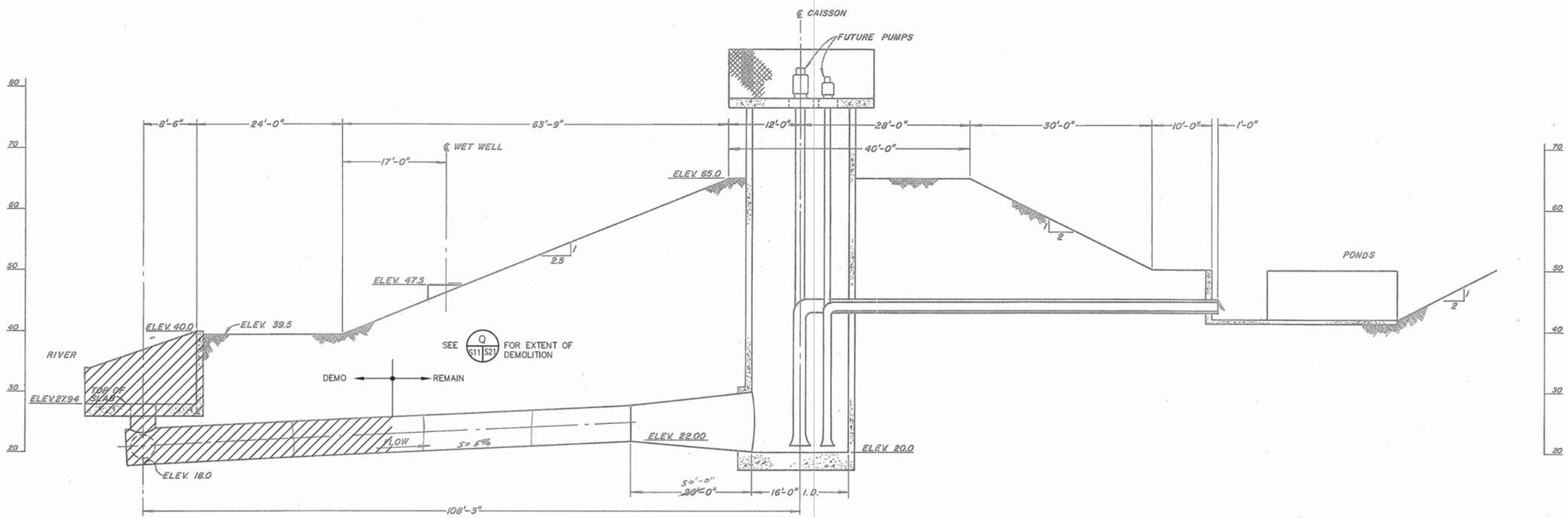

No.	DATE	REVISION	By
		AS BUILT Date 6-7-77	

RUSSIAN RIVER – COTATI INTERTIE PROJECT
WOHLER DAM AND DIVERSION
DIVERSION SECTION

SCALE: 1/8" = 1' | APPROVED: CHIEF ENGINEER RE 8271 | DRAWN: adf
DATE: DEC. 26, 1974 | CHECKED

SONOMA COUNTY WATER AGENCY

DESIGNED RE 20481 | SUBMITTED RE 10196 | DRAWING NUMBER 60-5-102.226

SHEET NO. 88

FH 97-410

MICROFILMED

BAR LENGTH ON ORIGINAL DRAWING EQUALS ONE INCH. ADJUST SCALE ACCORDINGLY

HDR Fisheries DESIGN CENTER

REGISTERED PROFESSIONAL ENGINEER LANCE M. JONES 68374 Exp. 9/30/15 CIVIL STATE OF CALIFORNIA

3/17/14

NO.	DATE	REVISION	BY
A	3/17/14	ISSUED FOR BIDS	JM

SONOMA COUNTY WATER AGENCY

SCALE: AS NOTED | DATE: 3/17/14
DRAWN: ACB
REVIEWED:

Sonoma County Water Agency
Mirabel Fish Screen and Fish Ladder Replacement
DIVERSION SECTION DEMOLITION

FILE NAME: 164479_d06.dwg
CONTRACT NUMBER: ####
DRAWING NUMBER: D6
SHEET 09 OF 99

C:\pwworking\sea\d0645506\164479_D06

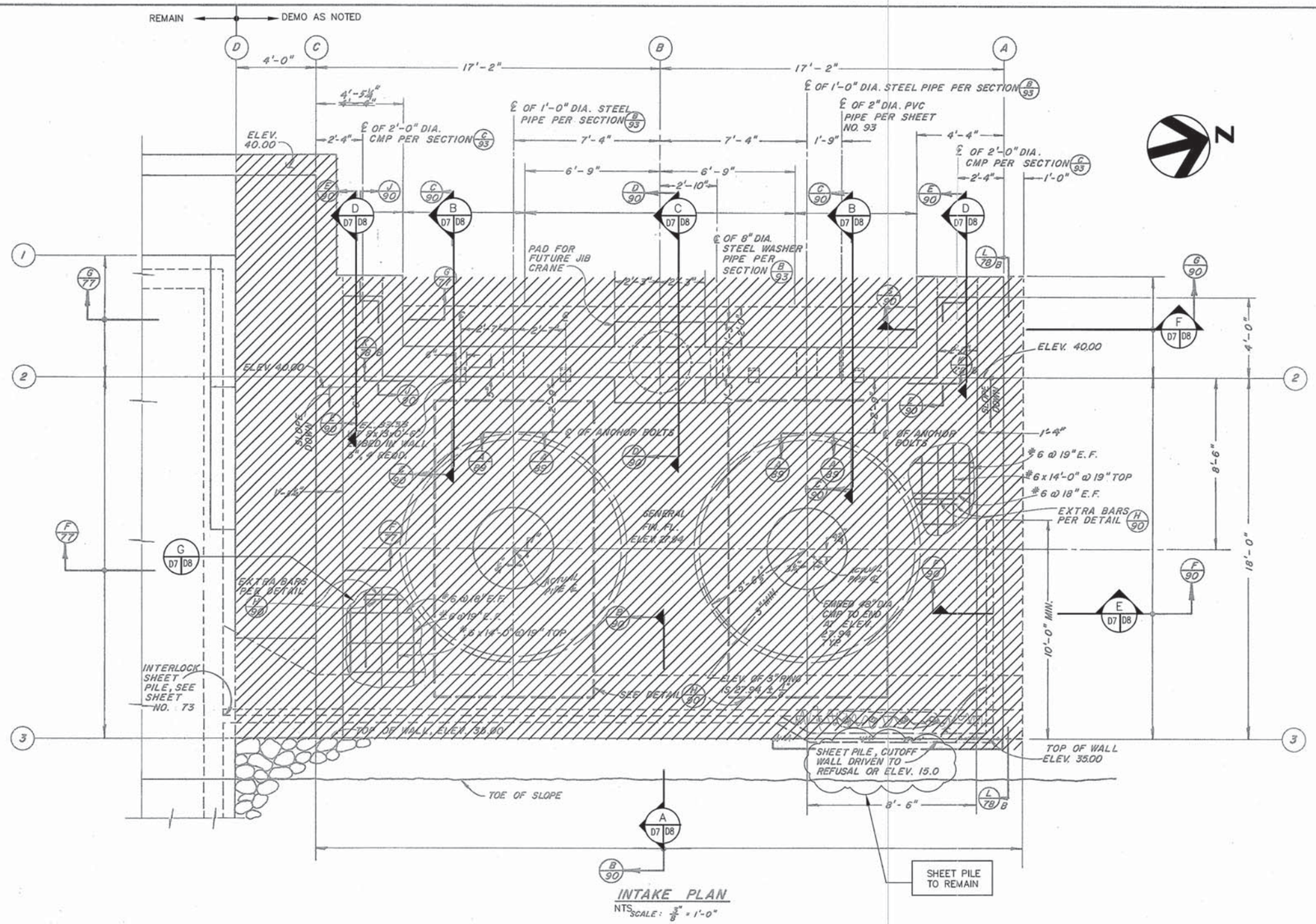

INTAKE PLAN

NTS SCALE: 3/8" = 1'-0"

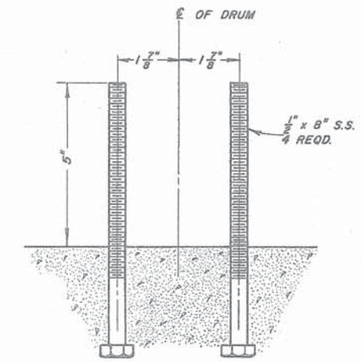

SECTION A/89

SCALE: 6" = 1'

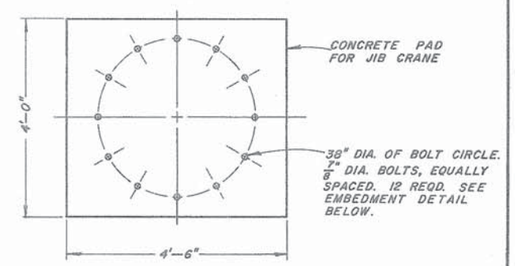

ANCHOR BOLT LAYOUT

FOR FUTURE JIB CRANE

SCALE: 3/8" = 1'

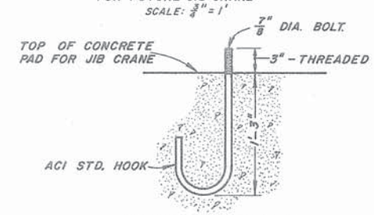

EMBEDMENT DETAIL

SCALE: 1 1/2" = 1'

No.	DATE	REVISION	By
		AS BUILT Date 6-7-77	

RUSSIAN RIVER – COTATI INTERTIE PROJECT
WOHLER DAM AND DIVERSION
INTAKE PLAN

SCALE: AS SHOWN | APPROVED: CHIEF ENGINEER RE 8271 | DRAWN
DATE: | CHECKED

SONOMA COUNTY WATER AGENCY

DESIGNED RE 25501 | SUBMITTED RE 10196 | DRAWING NUMBER 60-5-102.227

SHEET NO. 89

PW 27-4D

MICROFILMED

BAR LENGTH ON ORIGINAL DRAWING EQUALS ONE INCH. ADJUST SCALE ACCORDINGLY

HDR Fisheries DESIGN CENTER

REGISTERED PROFESSIONAL ENGINEER NANCE M. JONES 68374 Exp. 9/30/15 CIVIL STATE OF CALIFORNIA

3/17/14

NO.	DATE	REVISION	BY
A	3/17/14	ISSUED FOR BIDS	JM

SONOMA COUNTY WATER AGENCY

SCALE: AS NOTED | DATE: 3/17/14
DRAWN: ACB
REVIEWED:

Sonoma County Water Agency
Mirabel Fish Screen and Fish Ladder Replacement
INTAKE PLAN DEMOLITION

FILE NAME: 164479_d07.dwg
CONTRACT NUMBER: ####
DRAWING NUMBER: D7
SHEET 10 OF 99

C:\pwworking\sea\d0645506\164479_D07

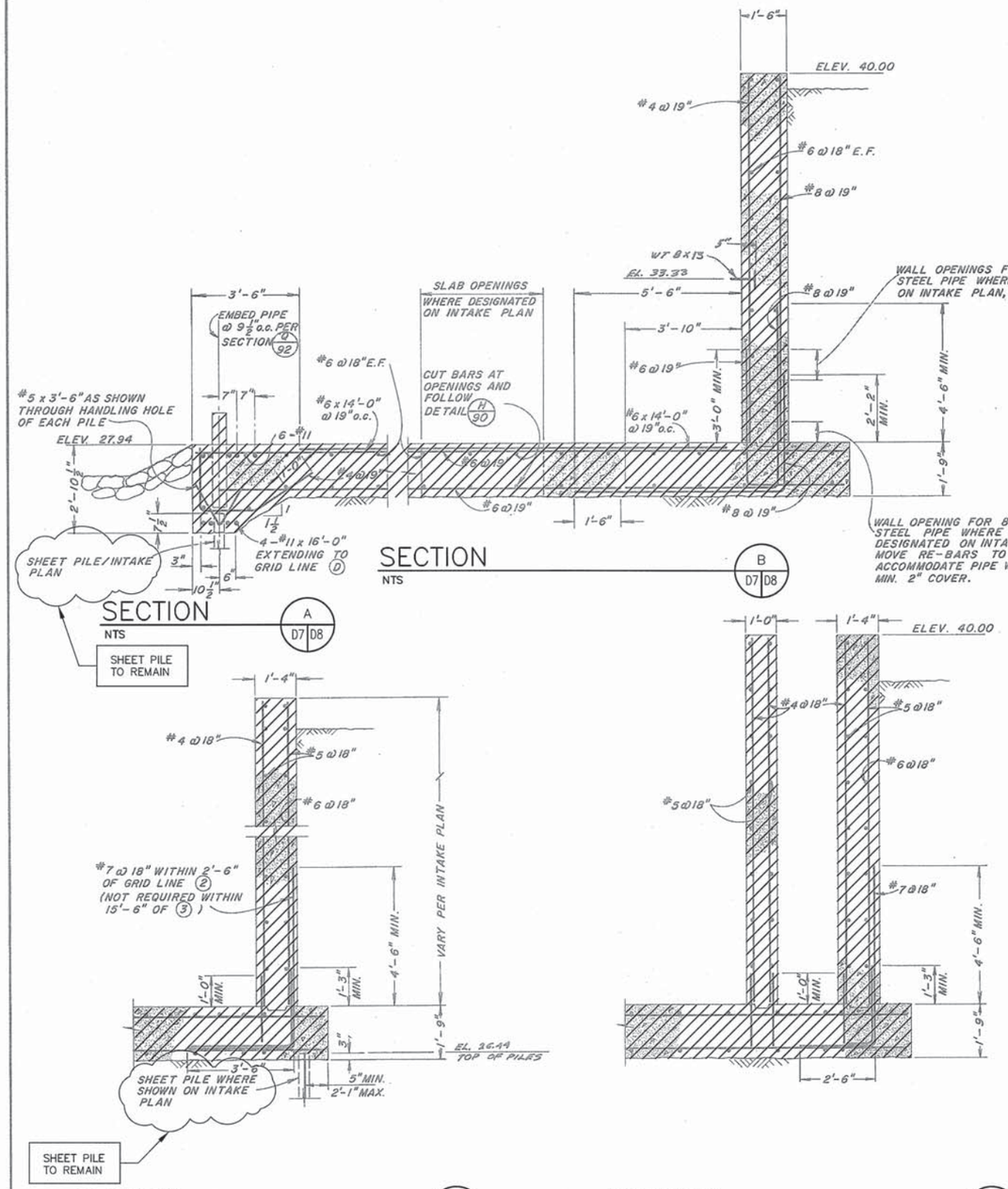

SECTION B
NTS
D7 D8

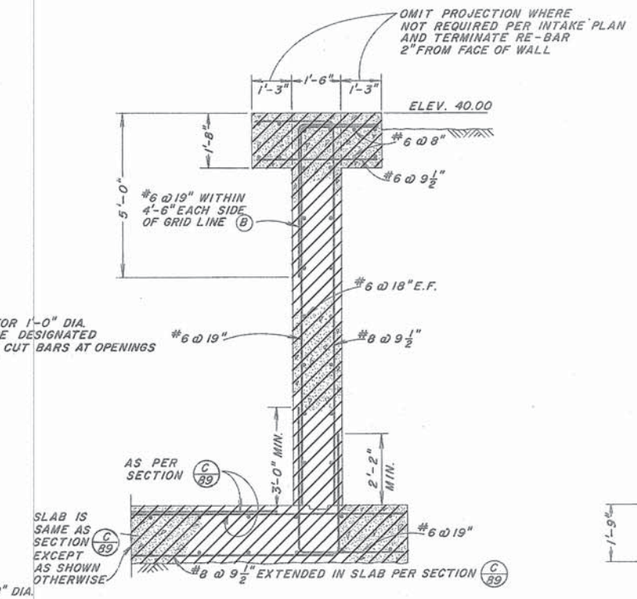

SECTION C
NTS
D7 D8

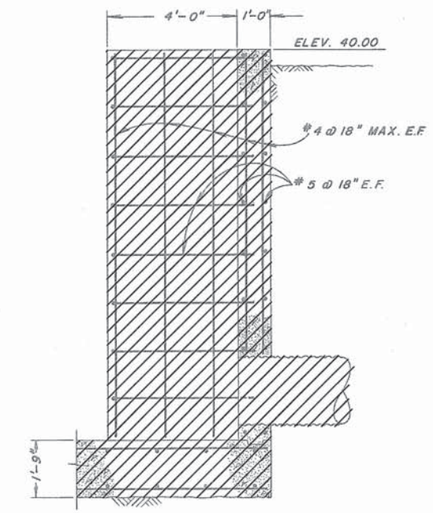

SECTION D
NTS
D7 D8

SECTION E
NTS
D7 D8

SECTION F
NTS
D7 D8

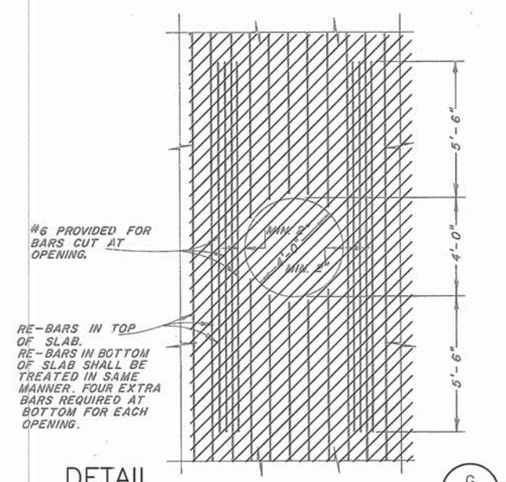

DETAIL G
NTS
D7 D8

NOTES

1. SEE SHEET NO. 78 FOR GENERAL NOTES, TYPICAL WALL INTERSECTION AND KEYWAY CONSTRUCTION JOINT.
2. FORMS ON INTERIOR FACES OF INTAKE STRUCTURE WALLS SHALL BE SHORED WITH HORIZONTAL STRUTS @ 4'-0" MAX. o.c. EACH WAY, WHICH SHALL NOT BE REMOVED UNTIL EXTERIOR FACES OF THESE WALLS HAVE BEEN BACKFILLED TO FINISH GRADES.

NOTE

TOP AND BOTTOM RE-BARS IN OTHER DIRECTION (NOT SHOWN) SHALL BE CONTINUOUS BETWEEN 4'-0" DIA. OPENINGS AND SHALL EXTEND 7'-6" FROM ℄ OF THE OPENINGS ON EITHER SIDE. 8 EXTRA BARS REQUIRED. TWO AT TOP, TWO AT BOTTOM, ON EACH SIDE OF OPENING.

No.	DATE	REVISION	By
		AS BUILT Date 6-7-77 By:	

RUSSIAN RIVER – COTATI INTERTIE PROJECT
WOHLER DAM AND DIVERSION
INTAKE REINFORCEMENT DETAILS

SCALE: AS SHOWN | APPROVED: CHIEF ENGINEER RE 8271 | DRAWN
DATE: | CHECKED

SONOMA COUNTY WATER AGENCY

DESIGNED RE 20301 | SUBMITTED RE 10196 | DRAWING NUMBER 60-5-102.228

SHEET NO. 90 PH 77-4D

BAR LENGTH ON ORIGINAL DRAWING EQUALS ONE INCH. ADJUST SCALE ACCORDINGLY

HDR Fisheries DESIGN CENTER

REGISTERED PROFESSIONAL ENGINEER LANCE M. JONES 68374 Exp. 9/30/15 CIVIL STATE OF CALIFORNIA 3/17/14

NO.	DATE	REVISION	BY
A	3/17/14	ISSUED FOR BIDS	JM

SONOMA COUNTY WATER AGENCY

SCALE: AS NOTED | DATE: 3/17/14
DRAWN: ACB
REVIEWED:

Sonoma County Water Agency
Mirabel Fish Screen and Fish Ladder Replacement
INTAKE REINFORCEMENT DETAILS DEMOLITION

FILE NAME: 164479_d08.dwg
CONTRACT NUMBER: ####
DRAWING NUMBER: D8
SHEET 11 OF 99

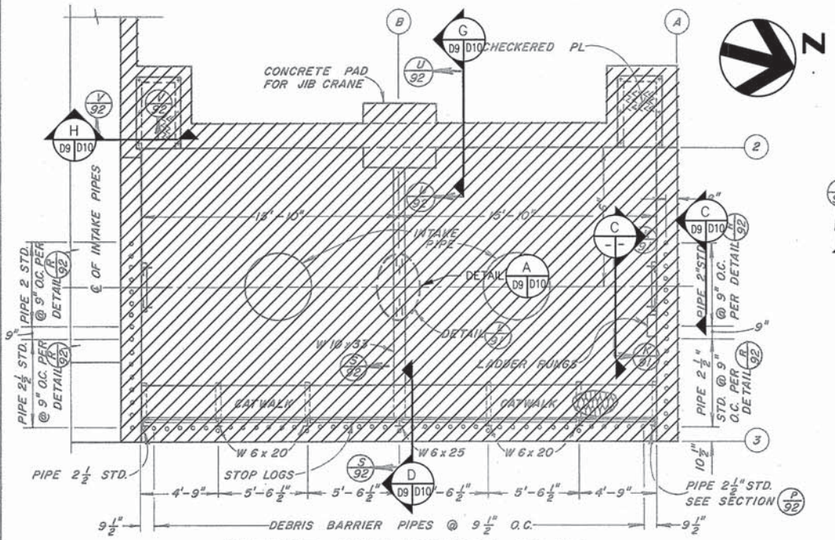

INTAKE STRUCTURE PLAN

NTS

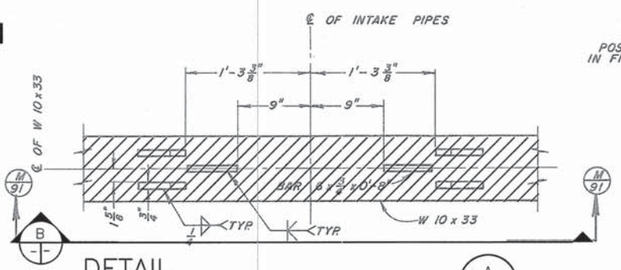

DETAIL

NTS

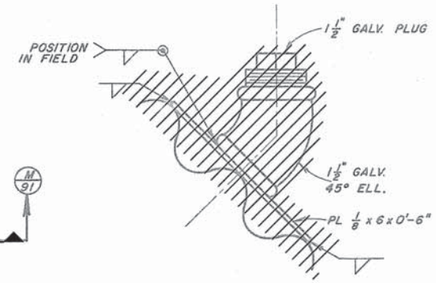

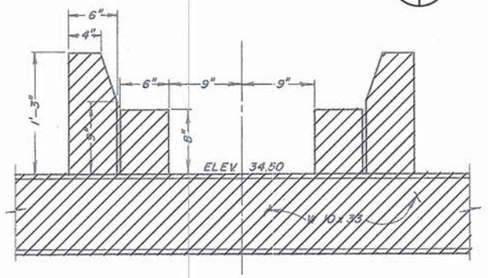

SECTION

NTS

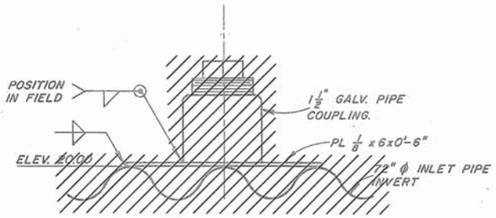

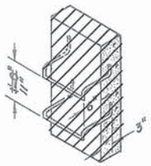

LADDER RUNG DETAIL

NO SCALE

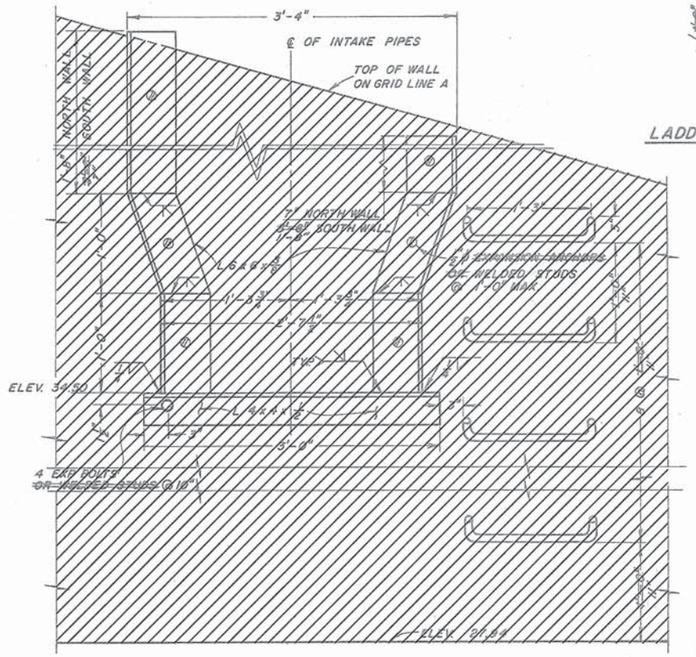

SECTION

NTS

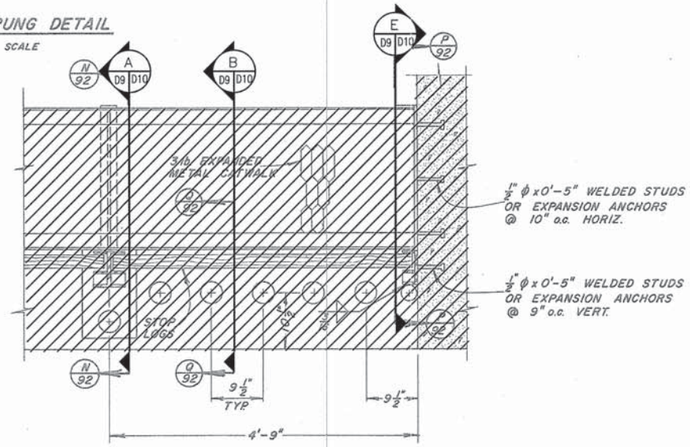

CATWALK NEAR STOP LOGS

NOTES:

1. WALL BRACKETS MAY BE INSTALLED WITH EXPANSION ANCHORS IN LIEU OF EMBEDDED TEES AND WELDED STUDS AT CONTRACTOR'S OPTION.
2. IF EXPANSION ANCHORS ARE USED ON L 6x6x⅜ HEADS MUST BE COUNTERSUNK TYPE AND SHALL BE INSTALLED FLUSH WITH SURFACE.

No.	DATE	REVISION	By
		AS BUILT Date 6-7-77	

RUSSIAN RIVER – COTATI INTERTIE PROJECT
WOHLER DAM AND DIVERSION
INTAKE METALWORK

SCALE: AS SHOWN | APPROVED: CHIEF ENGINEER RE 8271 | DRAWN
DATE: | CHECKED

SONOMA COUNTY WATER AGENCY

DESIGNED RE 25301 | SUBMITTED RE 10196 | DRAWING NUMBER 60-5-102.229

MICROFILMED

BAR LENGTH ON ORIGINAL DRAWING EQUALS ONE INCH. ADJUST SCALE ACCORDINGLY

HDR Fisheries DESIGN CENTER

REGISTERED PROFESSIONAL ENGINEER LANCE M. JONES 68374 Exp. 9/30/15 CIVIL STATE OF CALIFORNIA 3/17/14

NO.	DATE	REVISION	BY
A	3/17/14	ISSUED FOR BIDS	JM

SONOMA COUNTY WATER AGENCY

SCALE: AS NOTED | DATE: 3/17/14
DRAWN: ACB
REVIEWED:

Sonoma County Water Agency
Mirabel Fish Screen and Fish Ladder Replacement
INTAKE METALWORK DEMOLITION

FILE NAME: 164479_d09.dwg
CONTRACT NUMBER: ####
DRAWING NUMBER: D9
SHEET 12 OF 99

C:\pwworking\sea\d0645506\164479_D09

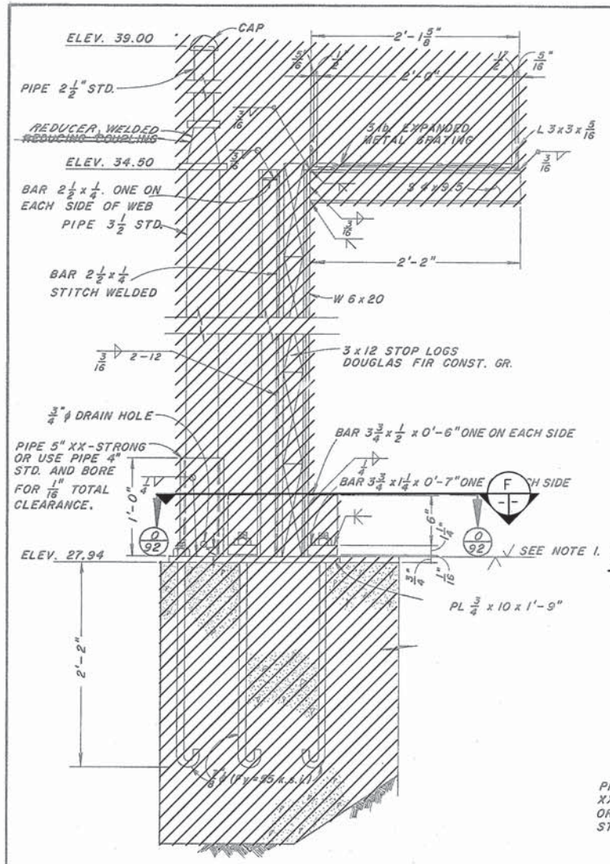

SECTION A
NTS
D9 D10

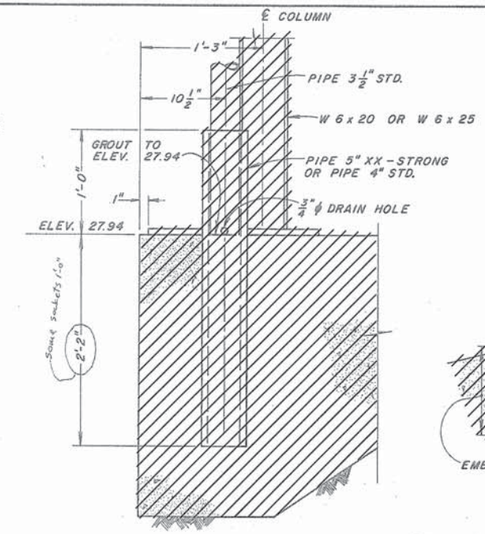

SECTION B
NTS
D9 D10

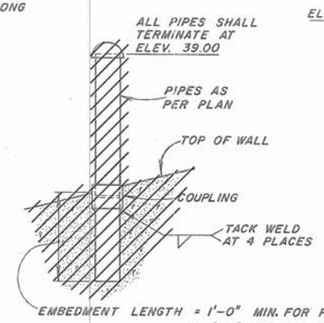

SECTION C
NTS
D9 D10

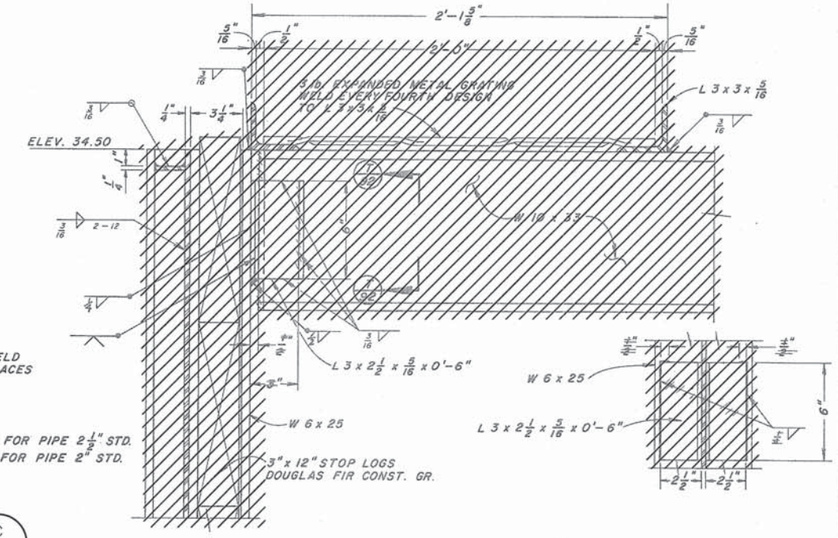

SECTION D
NTS
D9 D10

NOTES:
1. ✓ FINISH SYMBOL DENOTES 63√ (USAS B46.1)

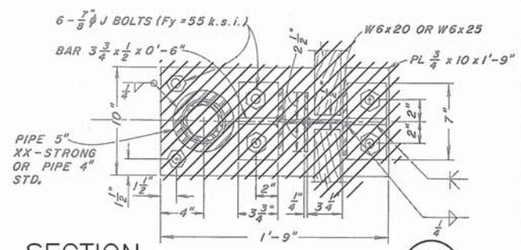

SECTION F
NTS
D9 D10

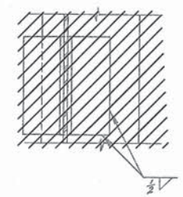

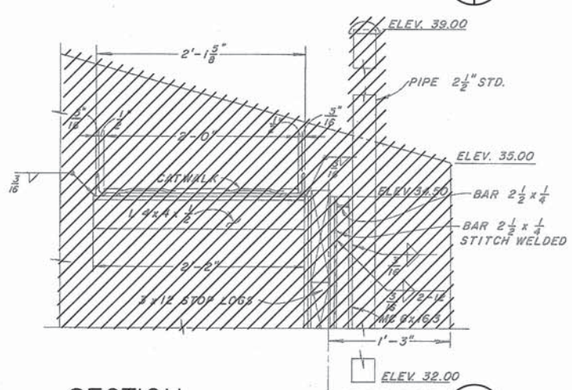

SECTION E
NTS
D9 D10

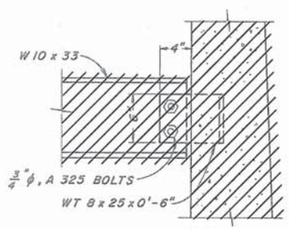

SECTION G
NTS
D9 D10

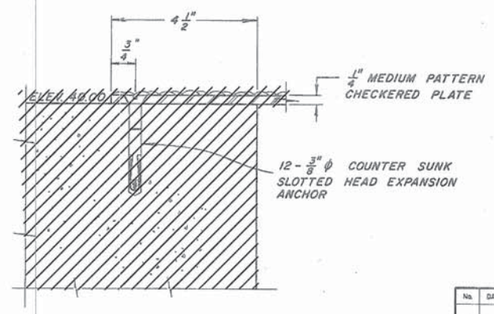

SECTION H
NTS
D9 D10

No.	DATE	REVISION	By
		AS BUILT Date 6-2-77	

RUSSIAN RIVER – COTATI INTERTIE PROJECT
WOHLER DAM AND DIVERSION
CATWALK AND STOP LOGS

SCALE: AS SHOWN | APPROVED: CHIEF ENGINEER RE 8271 | DRAWN
DATE: | CHECKED

SONOMA COUNTY WATER AGENCY

DESIGNED: RE 25501 | SUBMITTED: RE 10196 | DRAWING NUMBER 60-5-102.230

SHEET NO. 92

PH 27-4D

MICROFILMED

BAR LENGTH ON ORIGINAL DRAWING EQUALS ONE INCH. ADJUST SCALE ACCORDINGLY

HDR Fisheries DESIGN CENTER

REGISTERED PROFESSIONAL ENGINEER LANCE M. JONES 68374 Exp. 9/30/15 CIVIL STATE OF CALIFORNIA
3/17/14

NO.	DATE	REVISION	BY
A	3/17/14	ISSUED FOR BIDS	JM

SONOMA COUNTY WATER AGENCY

SCALE: AS NOTED | DATE: 3/17/14
DRAWN: ACB
REVIEWED:

Sonoma County Water Agency
Mirabel Fish Screen and Fish Ladder Replacement
CATWALK AND STOP LOGS DEMOLITION

FILE NAME: 164479_d10.dwg
CONTRACT NUMBER: ####
DRAWING NUMBER: D10
SHEET 13 OF 99

C:\pwworking\sea\d0645506\164479_D10

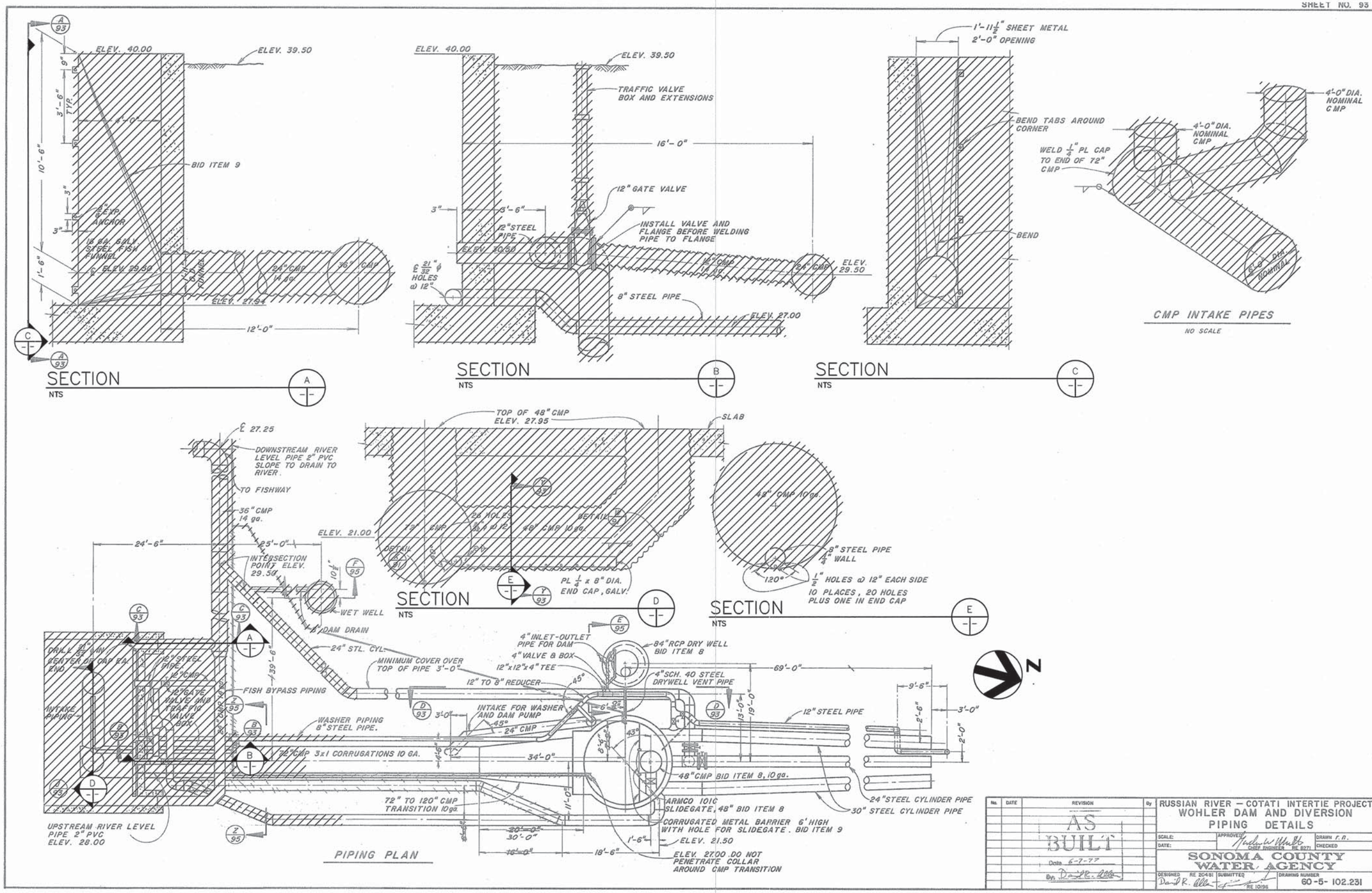

No.	DATE	REVISION	By
		AS BUILT Date 6-7-77 By	

RUSSIAN RIVER – COTATI INTERTIE PROJECT
WOHLER DAM AND DIVERSION
PIPING DETAILS

SCALE: | APPROVED: CHIEF ENGINEER RE 8271 | DRAWN: R.N. | DATE: | CHECKED:

SONOMA COUNTY WATER AGENCY

DESIGNED: RE 20481 | SUBMITTED: RE 10198 | DRAWING NUMBER: 60-5-102.231

SHEET NO. 93 PH 27-4D

MICROFILMED

BAR LENGTH ON ORIGINAL DRAWING EQUALS ONE INCH. ADJUST SCALE ACCORDINGLY

HDR Fisheries DESIGN CENTER

REGISTERED PROFESSIONAL ENGINEER LANCE M. JONES 68374 Exp. 9/30/15 CIVIL STATE OF CALIFORNIA

3/17/14

NO.	DATE	REVISION	BY
A	3/17/14	ISSUED FOR BIDS	JM

SONOMA COUNTY WATER AGENCY

SCALE: AS NOTED | DATE: 3/17/14
DRAWN: ACB
REVIEWED:

Sonoma County Water Agency
Mirabel Fish Screen and Fish Ladder Replacement
PIPING DETAILS DEMOLITION

FILE NAME: 164479_d11.dwg
CONTRACT NUMBER: ####
DRAWING NUMBER: D11
SHEET 14 OF 99

C:\pwworking\sec\d0645506\164479_D11

MATCH EXISTING
L=50.65, R=50.00
Δ=58° 02' 16"
EDGE OF EXISTING ROADWAY, TYP
N 1944796.00
E 6307803.93
N23° 33' 43.46"E
28.69'
PC: 0+28.69
PT: 0+79.34
N81° 35' 59.38"E
43.68'
1 C1 C4 UPPER ROAD PROFILE
7 C1 C14 TYPICAL SWALE DETAIL
FLUSH CURB ADJACENT TO GRAVEL ROAD, SEE DETAIL 4 C1 C14
PC: 1+23.02
PT: 1+57.84
N41° 41' 43.98"E
49.55
10' SLOPED TRANSITION FROM FLUSH CURB TO 6" OR 12" CURB, BEGIN TRANSITION STA 1+99.53 END TRANSITION STA 2+09.53
L=47.38, R=100.00
Δ=27° 08' 40"
PC: 2+09.53 UPPER ROAD
PT 2+09.53 LOWER ROAD
PT: 2+56.90
6" CONC CURB
UPPER ROAD ℄
L=34.82, R=50.00
Δ=39° 54' 15"
GRAVELED ROADWAY, SEE SECTION 3 C1 C14
CONCRETE ROADWAY, SEE SECTION C1 S15 S16
LOWER ROAD ℄
12" CONCRETE CURB
N41° 41' 43.98"E
95.54'
PC: 2+53.36
LOWER ROAD PROFILE 2 C1 C5
10' SLOPED TRANSITION FROM 12" CURB TO 24" CURB, BEGIN TRANSITION STA 2+54.13 END TRANSITION STA 2+64.13
N 1944956.97
E 6307993.33
L=47.38, R=100.00
Δ=27° 08' 40"
N 1944988.36
E 6308008.01
PT: 3+00.76
EXISTING EMERGENCY DIVERSION INTAKE
N 1945018.61
E 6308015.87
N14° 33' 03.75"E
80.76'
REBAR FOUND
N 1945001.42
E 6307917.37
ELEV 65.78
SPIKE FOUND
N 1945183.92
E 6307939.34
ELEV 66.47
EXISTING PUMP STATION
EXIST DRY WELL
EXISTING ACCESS ROAD TO BE ABANDONED/RE-GRADED
VIEWING AREA WITH (5) VIEWING WINDOWS
ADA RAMP
STAIRCASE
N14° 33' 03.75"E
189.78'
N14° 33' 03.75"E
45.28'
335 SQ FT SAFE DISPERSAL AREA
3+00
4+00
5+00
6+00
L=12.13, R=50.00
Δ=13° 53' 46"
PC: 4+91.97
PT: 5+04.09
N28° 26' 49.86"E
37.30'
PC: 5+41.39
L=7.61, R=12.00
Δ=36° 20' 30"
R=44'
PT: 5+49.01
N7° 53' 39.73"W
86.90'
FLOOD GATE SEE SHEET A6
VERTICAL SLOT FISH LADDER WITH GRATING COVER
1 C1 C7 FISHWAY PLAN
CONCRETE FOREBAY FLOOR
INTAKE SCREEN PANELS
FISH LADDER EXIT
SLOPING CONCRETE SILL
EXISTING INFLATIBLE DAM WITH CONCRETE FOUNDATION
EXISTING EAST FISHWAY
RUSSIAN RIVER
N 1945360.66
E 6308018.24
MATCH EXISTING
EXIST 2½" GALVANIZED STEEL PIPE
ACCESS ROAD
PC: 6+35.91
Δ=70° 22' 18"
L=61.41, R=50.00
R=20'
7 C1 C14 TYPICAL SWALE DETAIL
12' GRAVELED ROADWAY, SEE SECTION 3 C1 C14
RIVER EGRESS/ REPLACEMENT STAIRS, SEE 5 C1 S7
1 C1 C6 FISH SCREEN AREA PLAN

LEGEND:

CONCRETE ROAD SURFACE

GRAVEL ROAD SURFACE

EDGE OF EXISTING ROAD

SITE PLAN

1 -- C1

0 20 40 60 FT

SCALE: 1"=20'

N

NOTES:

1. SEE SHEETS C6 AND C7 FOR HORIZONTAL COORDINATES OF FISH LADDER STRUCTURE.
2. SEE STRUCTURAL PLANS FOR FISH LADDER DIMENSIONS.
3. HORIZONTAL DATUM: CALIFORNIA COORDINATE SYSTEM, ZONE 2 NORTH AMERICAN DATUM OF 1983.

BAR LENGTH ON ORIGINAL DRAWING EQUALS ONE INCH. ADJUST SCALE ACCORDINGLY

HDR Fisheries DESIGN CENTER

REGISTERED PROFESSIONAL ENGINEER LANCE M. JONES 68374 Exp. 9/30/15 CIVIL STATE OF CALIFORNIA 3/17/14

NO.	DATE	REVISION	BY
A	3/17/14	ISSUED FOR BIDS	LMJ

SONOMA COUNTY WATER AGENCY

SCALE: AS NOTED
DATE: 3/17/14
DRAWN: PVM
REVIEWED:

Sonoma County Water Agency

Mirabel Fish Screen and Fish Ladder Replacement

SITE PLAN

FILE NAME: 164479_c01.dwg
CONTRACT NUMBER: ####
DRAWING NUMBER: C1

C:\pwworking\sea\d0645475\164479_C01

NOTES:

1. SEE SITE PLAN, SHEET C1 FOR ROADWAY LAYOUT AND GEOMETRY.
2. SEE SHEET C3 FOR SITE UTILITIES.
3. SLOPE OF DRAINAGE SWALE SHALL BE 1% MINIMUM.
4. HORIZONTAL DATUM: CALIFORNIA COORDINATE SYSTEM, ZONE 2 NORTH AMERICAN DATUM OF 1983.

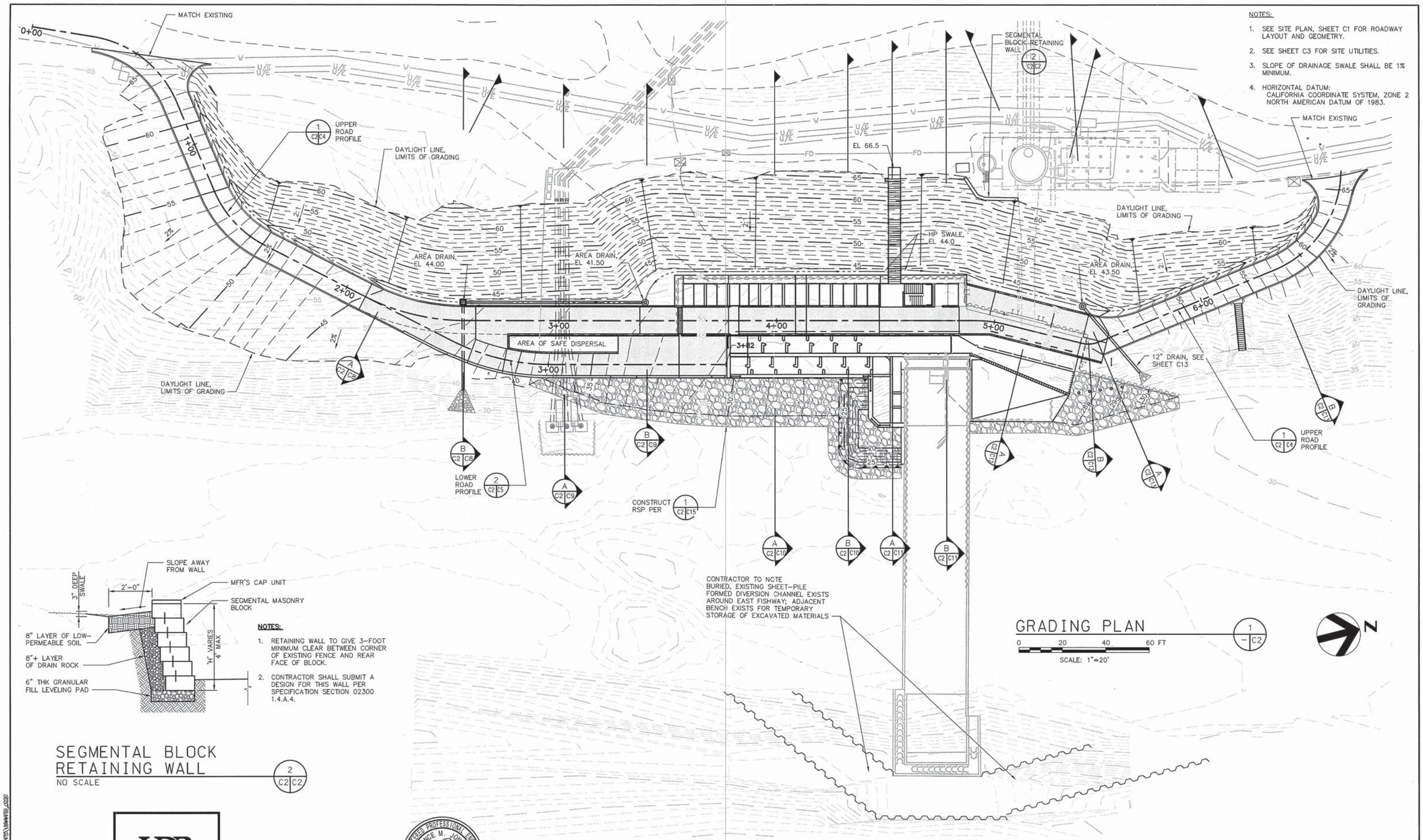

NOTES:

1. RETAINING WALL TO GIVE 3-FOOT MINIMUM CLEAR BETWEEN CORNER OF EXISTING FENCE AND REAR FACE OF BLOCK.
2. CONTRACTOR SHALL SUBMIT A DESIGN FOR THIS WALL PER SPECIFICATION SECTION 02300 1.4.A.4.

SEGMENTAL BLOCK RETAINING WALL
NO SCALE

BAR LENGTH ON ORIGINAL DRAWING EQUALS ONE INCH. ADJUST SCALE ACCORDINGLY

HDR Fisheries DESIGN CENTER

REGISTERED PROFESSIONAL ENGINEER LANCE M. JONES 68374 Exp. 9/30/15 CIVIL STATE OF CALIFORNIA 3/17/14

NO.	DATE	REVISION	BY
A	3/17/14	ISSUED FOR BIDS	LMJ

SONOMA COUNTY WATER AGENCY

SCALE: AS NOTED | DATE: 3/17/14
DRAWN: PVM
REVIEWED:

Sonoma County Water Agency
Mirabel Fish Screen and Fish Ladder Replacement
GRADING PLAN

FILE NAME: 164479_c02.dwg
CONTRACT NUMBER: ####
DRAWING NUMBER: C2
SHEET 16 OF 99

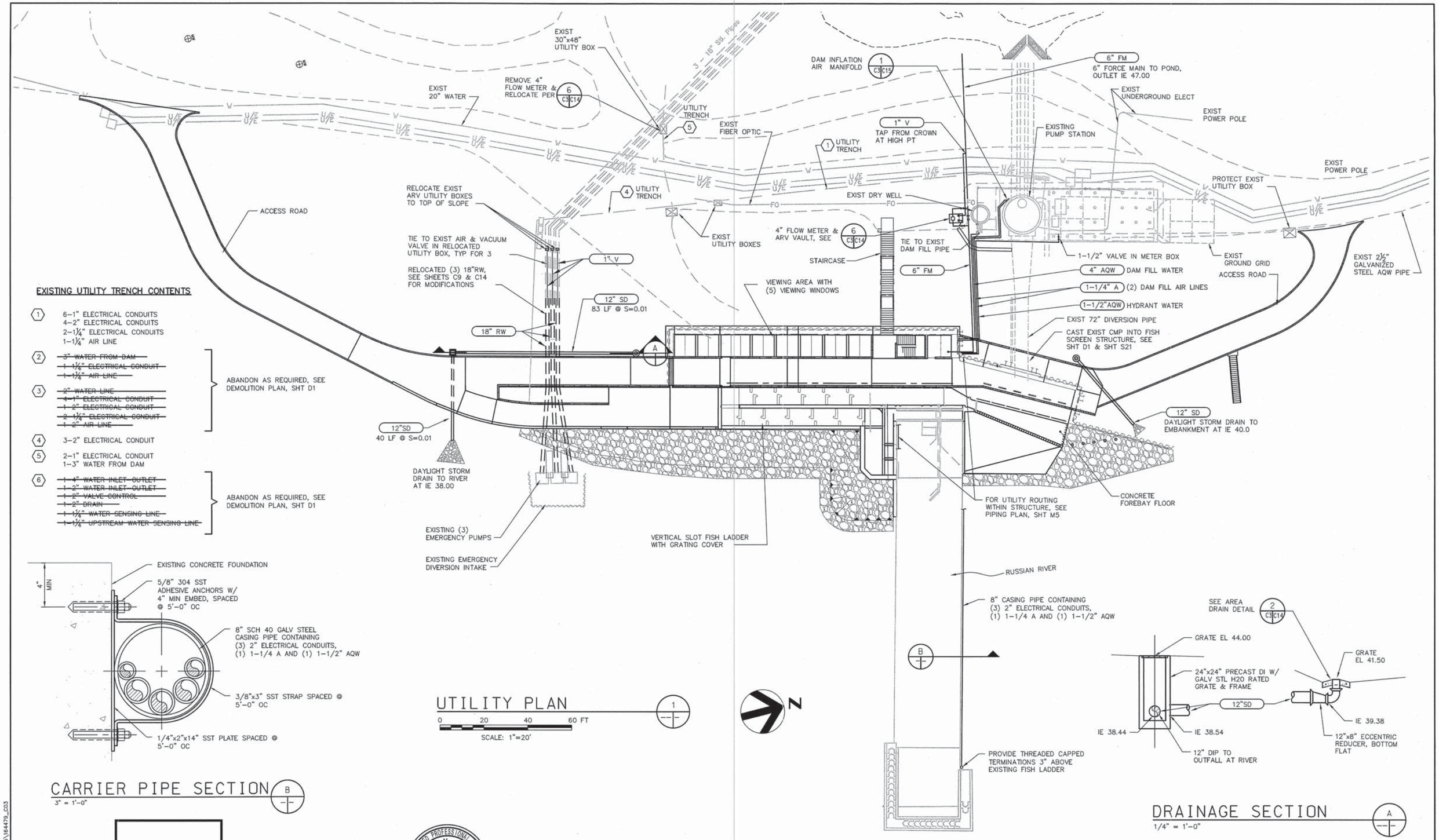

UTILITY PLAN 1
0 20 40 60 FT
SCALE: 1"=20'

CARRIER PIPE SECTION B
3" = 1'-0"

DRAINAGE SECTION A
1/4" = 1'-0"

BAR LENGTH ON ORIGINAL DRAWING EQUALS ONE INCH. ADJUST SCALE ACCORDINGLY

HDR Fisheries DESIGN CENTER

REGISTERED PROFESSIONAL ENGINEER LANCE M. JONES 68374 Exp. 9/30/15 CIVIL STATE OF CALIFORNIA 3/17/14

NO.	DATE	REVISION	BY
A	3/17/14	ISSUED FOR BIDS	LMJ

SONOMA COUNTY WATER AGENCY

SCALE: AS NOTED | DATE: 3/17/14
DRAWN: PVM
REVIEWED:

Sonoma County Water Agency
Mirabel Fish Screen and Fish Ladder Replacement
SITE UTILITY PLAN

FILE NAME: 164479_c03.dwg
CONTRACT NUMBER: ####
DRAWING NUMBER: C3
SHEET 17 OF 99

C:\pwworking\sea\d0645475\164479_C03

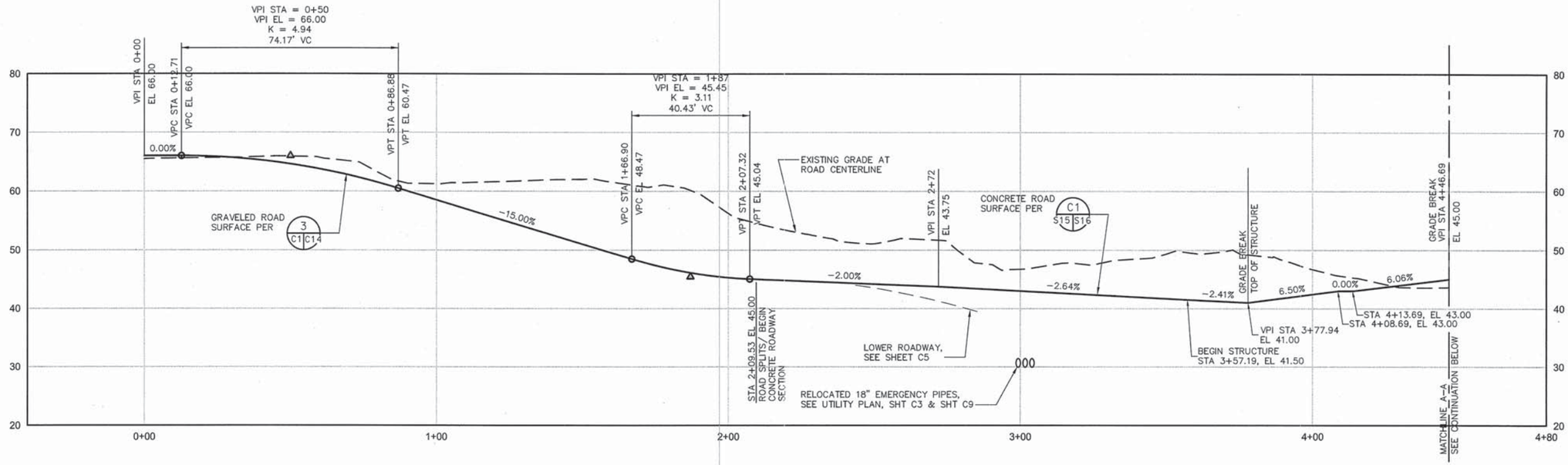

UPPER ROAD PROFILE

1 / C2 C4

HORIZ SCALE: 1" = 20'
VERT SCALE: 1" = 10'

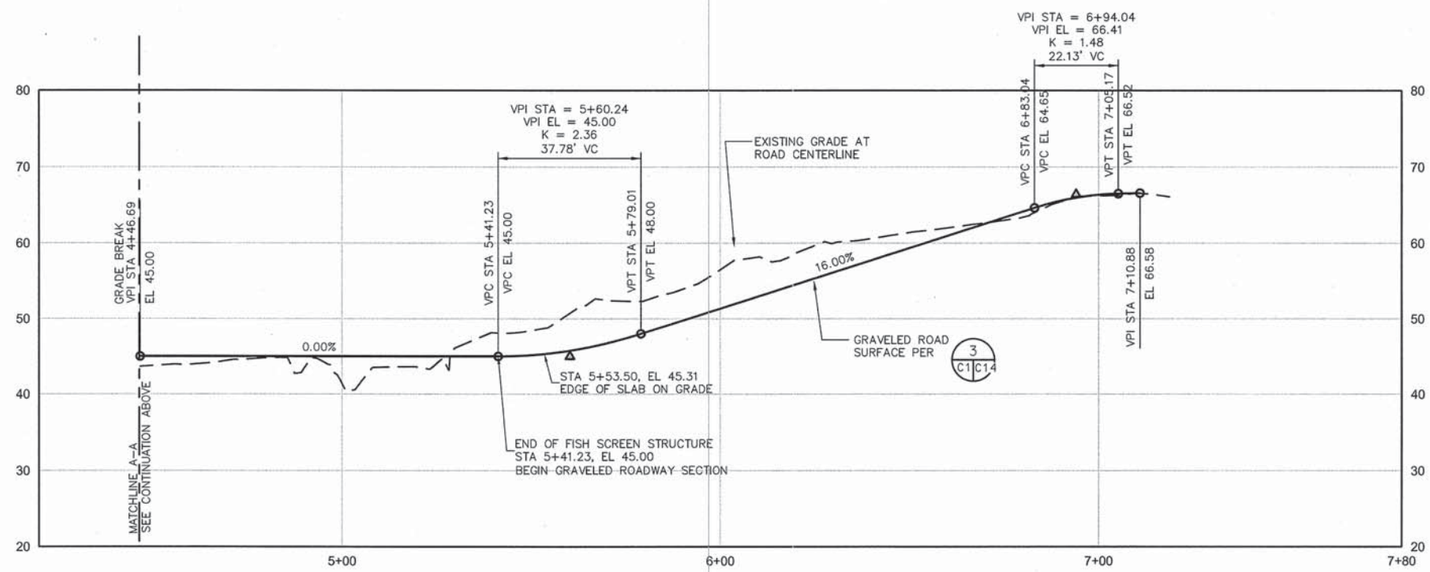

UPPER ROAD PROFILE

1 / C2 C4

HORIZ SCALE: 1" = 20'
VERT SCALE: 1" = 10'

BAR LENGTH ON ORIGINAL DRAWING EQUALS ONE INCH. ADJUST SCALE ACCORDINGLY

HDR Fisheries DESIGN CENTER

REGISTERED PROFESSIONAL ENGINEER LANCE M. JONES 68374 Exp. 9/30/15 CIVIL STATE OF CALIFORNIA

3/17/14

NO.	DATE	REVISION	BY
A	3/17/14	ISSUED FOR BIDS	LMJ

SONOMA COUNTY WATER AGENCY

SCALE: AS NOTED
DATE: 3/17/14
DRAWN: PVM
REVIEWED:

Sonoma County Water Agency
Mirabel Fish Screen and Fish Ladder Replacement
UPPER ROAD PROFILE

FILE NAME: 164479_c04.dwg
CONTRACT NUMBER: ####
DRAWING NUMBER: C4
SHEET 18 OF 99

C:\pwworking\sea\d0645475\164479_C04

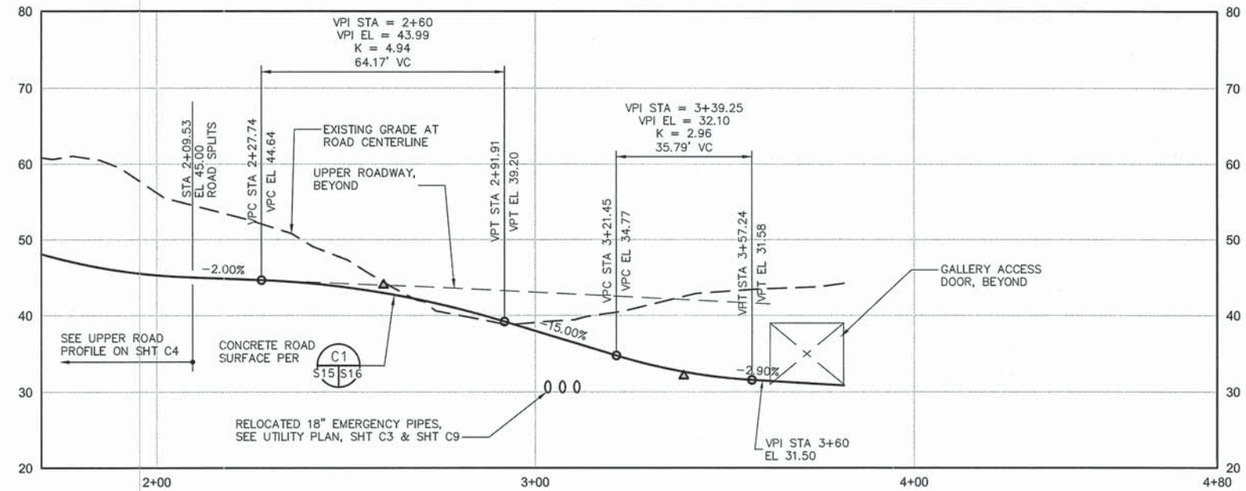

LOWER ROAD PROFILE

2
C2 C5

HORIZ SCALE: 1" = 20'
VERT SCALE: 1" = 10'

BAR LENGTH ON ORIGINAL DRAWING EQUALS ONE INCH. ADJUST SCALE ACCORDINGLY

HDR Fisheries DESIGN CENTER

REGISTERED PROFESSIONAL ENGINEER
LANCE M. JONES
68374
Exp. 9/30/15
CIVIL
STATE OF CALIFORNIA
3/17/14

NO.	DATE	REVISION	BY
A	3/17/14	ISSUED FOR BIDS	LMJ

SONOMA COUNTY WATER AGENCY

SCALE: AS NOTED
DATE: 3/17/14
DRAWN: PVM
REVIEWED:

Sonoma County Water Agency
Mirabel Fish Screen and Fish Ladder Replacement
LOWER ROAD PROFILE

FILE NAME: 164479_c05.dwg
CONTRACT NUMBER: ####
DRAWING NUMBER: C5
SHEET 19 OF 99

C:\pwworking\sea\d0645475\164479_C05

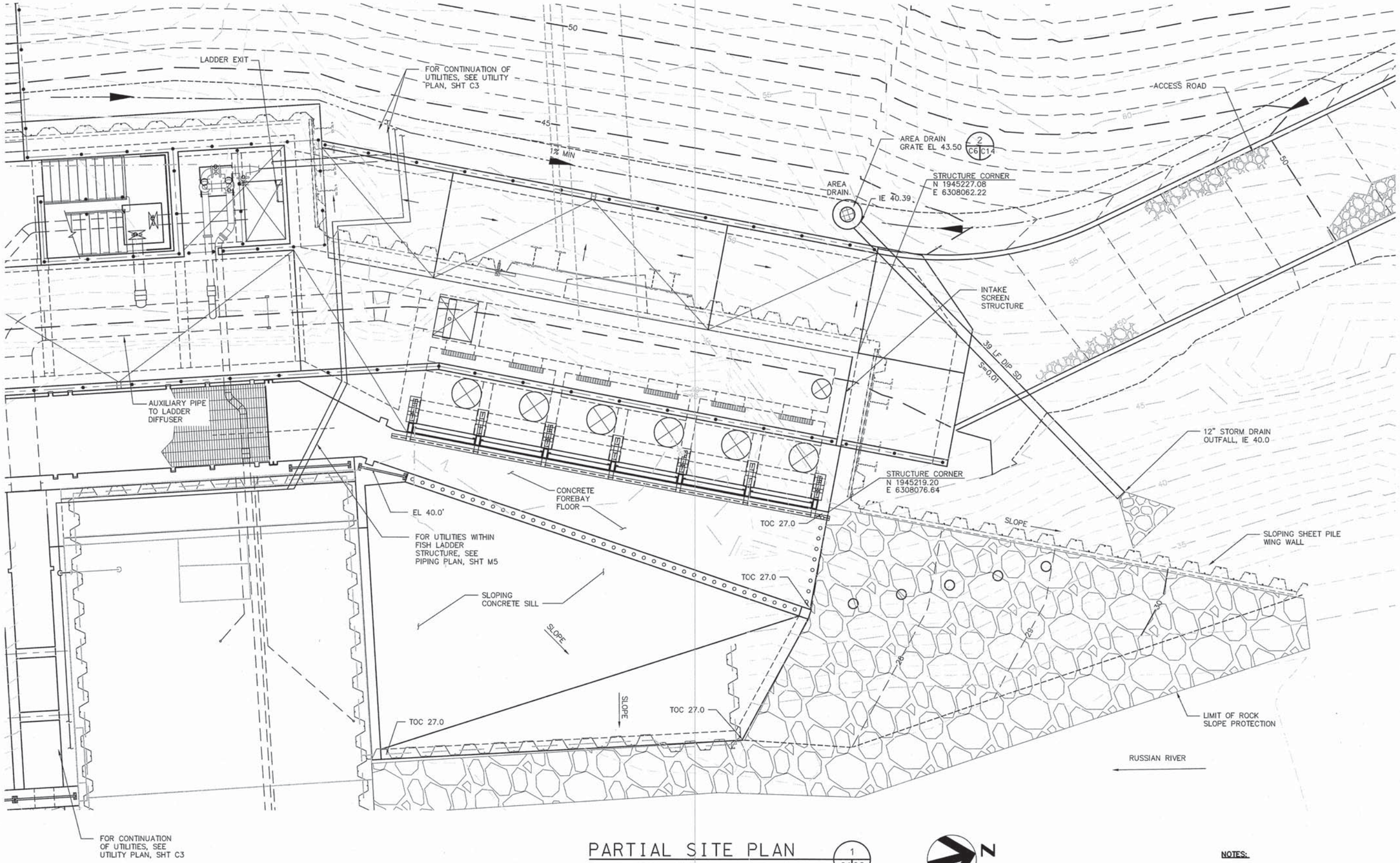

PARTIAL SITE PLAN

1
C1 C6

0 5 10 15 FT

SCALE: 1"=5'

N

NOTES:

1. SEE SHEET C13, SECTION "A" FOR DETAILS OF STORM DRAIN LINE.

BAR LENGTH ON ORIGINAL DRAWING EQUALS ONE INCH. ADJUST SCALE ACCORDINGLY

HDR Fisheries DESIGN CENTER

REGISTERED PROFESSIONAL ENGINEER
LANCE M. JONES
68374
Exp. 9/30/15
CIVIL
STATE OF CALIFORNIA
3/17/14

NO.	DATE	REVISION	BY
A	3/17/14	ISSUED FOR BIDS	LMJ

SONOMA COUNTY WATER AGENCY

SCALE: AS NOTED
DATE: 3/17/14
DRAWN: PVM
REVIEWED:

Sonoma County Water Agency
Mirabel Fish Screen and Fish Ladder Replacement
FISH SCREEN PLAN

FILE NAME: 164479_c06.dwg
CONTRACT NUMBER: ####
DRAWING NUMBER: C6
SHEET 20 OF 99

C:\pwworking\sac\d0645475\164479_C06

EL 42.2
STRUCTURE CORNER
N 1945054.25
E 6307989.99
HP EL 44.0
HP EL 44.0
2
C7 C14
AREA DRAIN
GRATE EL 41.50
IE 39.38
83 LF DIP SD
AREA
DRAIN
S=0.01
6" CONC CURB
STAIRCASE
STRUCTURE CORNER
N 1945064.25
E 6308039.07
FLOOD DOOR
TURNING
POOL
SLOPE
SLOPE
AUXILIARY
ATTRACTION
FLOW PIPE
FISHWAY
EXIT
AUXILIARY
ATTRACTION
FLOW DIFFUSER
1+50
1+87.42
LIMIT OF ROCK
SLOPE PROTECTION
RUSSIAN RIVER
VERTICAL SLOT FISHWAY
ENTRANCE, (3) PLACES
FIN GRADE
EL 27.00
TOE OF
SLOPE
PLUNGE
POOL

FISHWAY PLAN

1
C1 C7

0 5 10 15 FT
SCALE: 1"=5'

N

NOTES:

1. SEE SHEETS C3 AND C9, SECTION "B" FOR DETAILS OF STORM DRAIN LINES.

BAR LENGTH ON ORIGINAL DRAWING EQUALS ONE INCH. ADJUST SCALE ACCORDINGLY

HDR Fisheries DESIGN CENTER

REGISTERED PROFESSIONAL ENGINEER
LANCE M. JONES
68374
Exp. 9/30/15
CIVIL
STATE OF CALIFORNIA
3/17/14

NO.	DATE	REVISION	BY
A	3/17/14	ISSUED FOR BIDS	LMJ

SONOMA COUNTY WATER AGENCY

SCALE: AS NOTED
DATE: 3/17/14
DRAWN: PVM
REVIEWED:

Sonoma County Water Agency
Mirabel Fish Screen and Fish Ladder Replacement
FISHWAY PLAN

FILE NAME: 164479_c07.dwg
CONTRACT NUMBER: ####
DRAWING NUMBER: C7
SHEET 21 OF 99

C:\pwworking\sea\d0645475\164479_C07

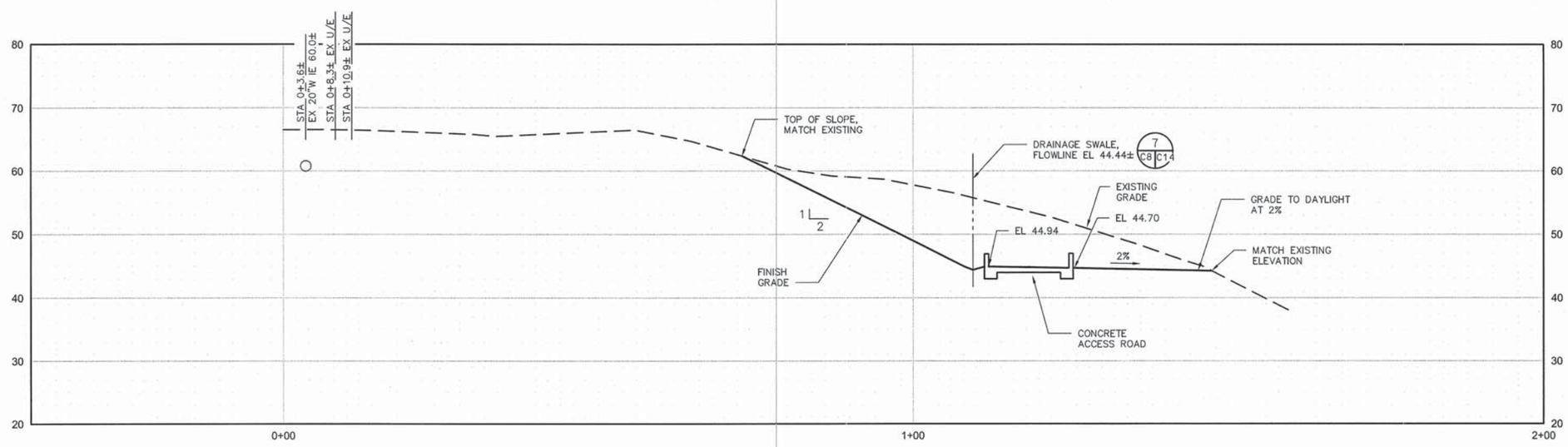

SECTION A C2 C8

0 5 10 20 30 FT

SCALE: 1"=10'

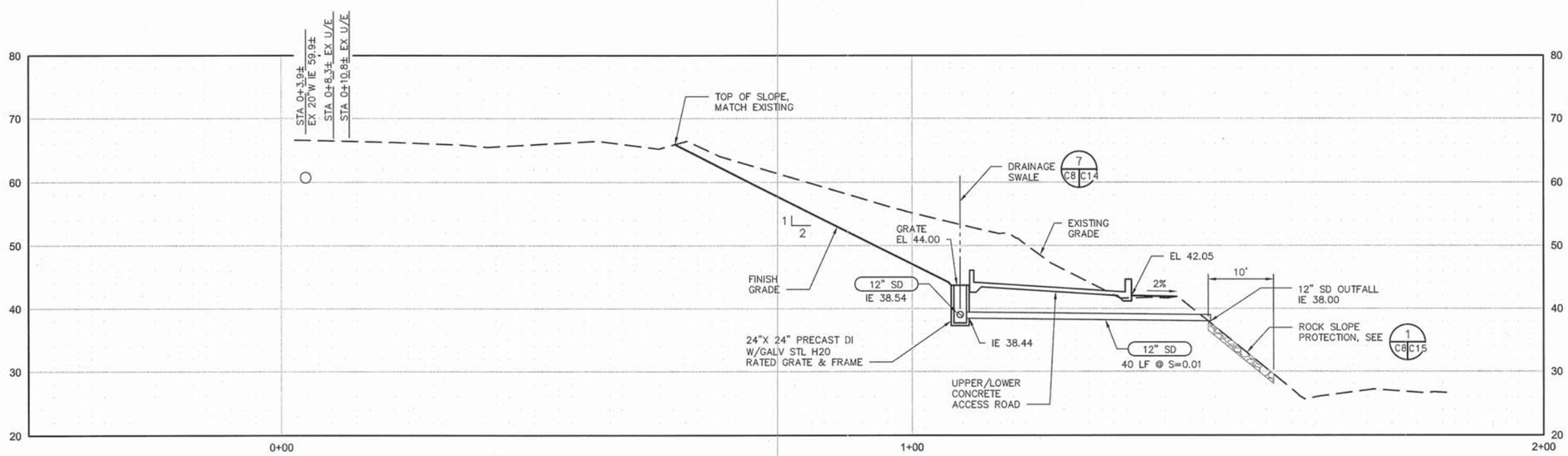

SECTION B C2 C8

0 5 10 20 30 FT

SCALE: 1"=10'

BAR LENGTH ON ORIGINAL DRAWING EQUALS ONE INCH. ADJUST SCALE ACCORDINGLY

HDR Fisheries DESIGN CENTER

REGISTERED PROFESSIONAL ENGINEER LANCE M. JONES 68374 Exp. 9/30/15 CIVIL STATE OF CALIFORNIA 3/17/14

NO.	DATE	REVISION	BY
A	3/17/14	ISSUED FOR BIDS	LMJ

SONOMA COUNTY WATER AGENCY

SCALE: AS NOTED | DATE: 3/17/14

DRAWN: PVM

REVIEWED:

Sonoma County Water Agency

Mirabel Fish Screen and Fish Ladder Replacement

SITE SECTIONS 1

FILE NAME: 164479_c08.dwg

CONTRACT NUMBER: ####

DRAWING NUMBER: C8

SHEET 22 OF 99

C:\pwworking\sec\d0645475\164479_C08

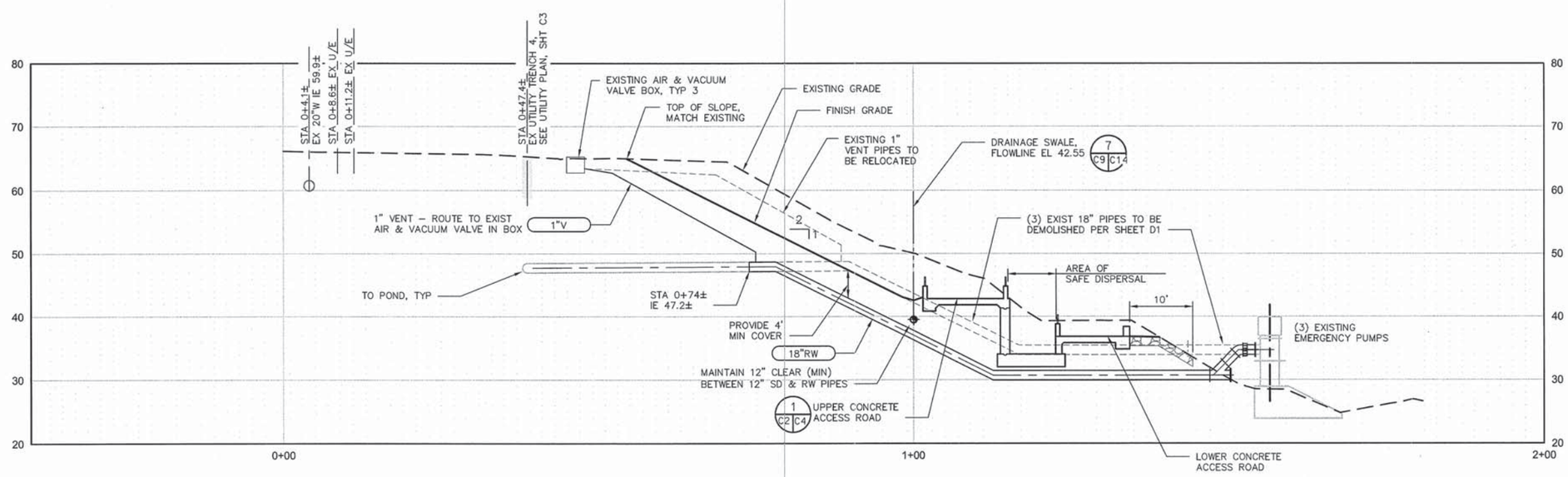

SECTION A C2 C9

0 5 10 20 30 FT

SCALE: 1"=10'

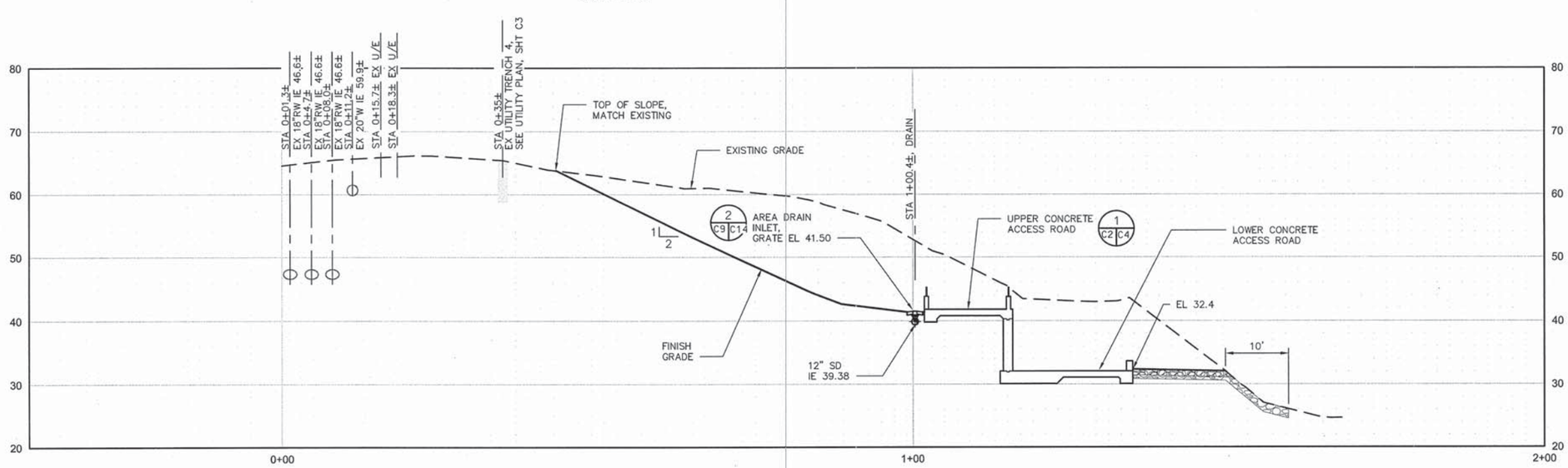

SECTION B C2 C9

0 5 10 20 30 FT

SCALE: 1"=10'

BAR LENGTH ON ORIGINAL DRAWING EQUALS ONE INCH. ADJUST SCALE ACCORDINGLY

HDR Fisheries DESIGN CENTER

REGISTERED PROFESSIONAL ENGINEER LANCE M. JONES 68374 Exp. 9/30/15 CIVIL STATE OF CALIFORNIA 3/17/14

NO.	DATE	REVISION	BY
A	3/17/14	ISSUED FOR BIDS	LMJ

SONOMA COUNTY WATER AGENCY

SCALE: AS NOTED | DATE: 3/17/14
DRAWN: PVM
REVIEWED:

Sonoma County Water Agency
Mirabel Fish Screen and Fish Ladder Replacement
SITE SECTIONS 2

FILE NAME: 164479_c09.dwg
CONTRACT NUMBER: ####
DRAWING NUMBER: C9
SHEET 23 OF 99

C:\pwworking\sea\d0645475\164479_C09

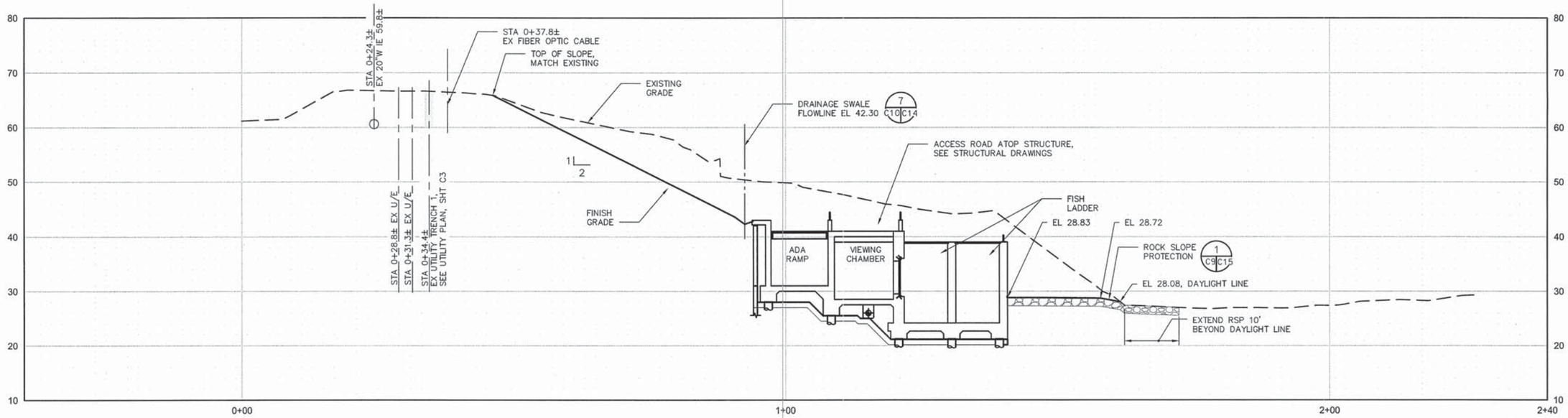

SECTION A C2 C10

0 5 10 20 30 FT

SCALE: 1"=10'

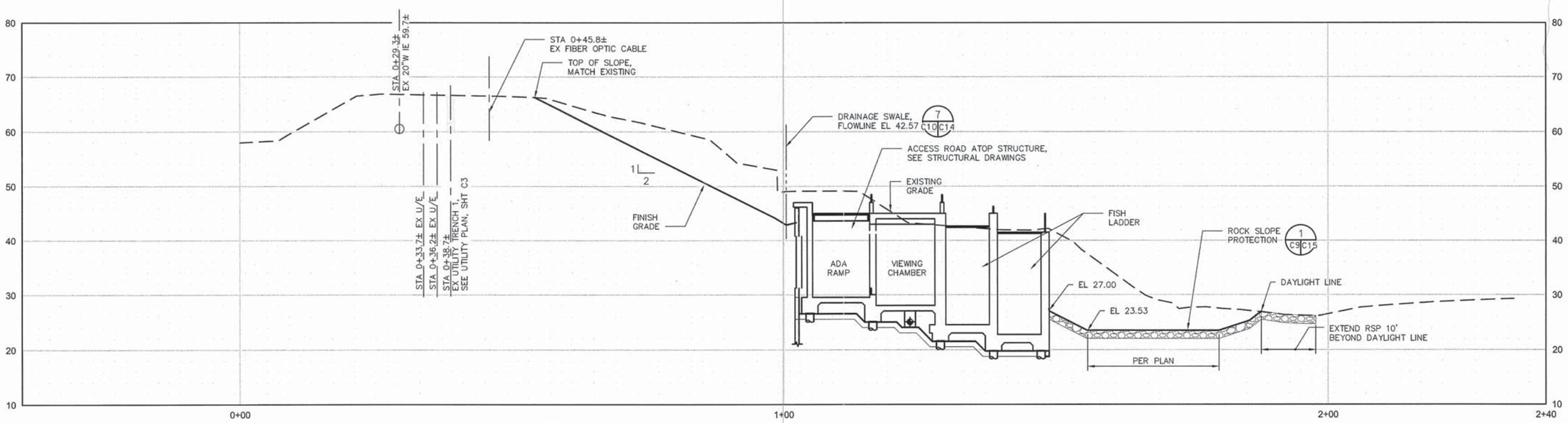

SECTION B C2 C10

0 5 10 20 30 FT

SCALE: 1"=10'

BAR LENGTH ON ORIGINAL DRAWING EQUALS ONE INCH. ADJUST SCALE ACCORDINGLY

HDR Fisheries DESIGN CENTER

REGISTERED PROFESSIONAL ENGINEER LANCE M. JONES 68374 Exp. 9/30/15 CIVIL STATE OF CALIFORNIA 3/17/14

NO.	DATE	REVISION	BY
A	3/17/14	ISSUED FOR BIDS	LMJ

SONOMA COUNTY WATER AGENCY

SCALE: AS NOTED DATE: 3/17/14
DRAWN: PVM
REVIEWED:

Sonoma County Water Agency
Mirabel Fish Screen and Fish Ladder Replacement
SITE SECTIONS 3

FILE NAME: 164479_c10.dwg
CONTRACT NUMBER: ####
DRAWING NUMBER: C10
SHEET 24 OF 99

C:\pwworking\sea\d0645475\164479_C10

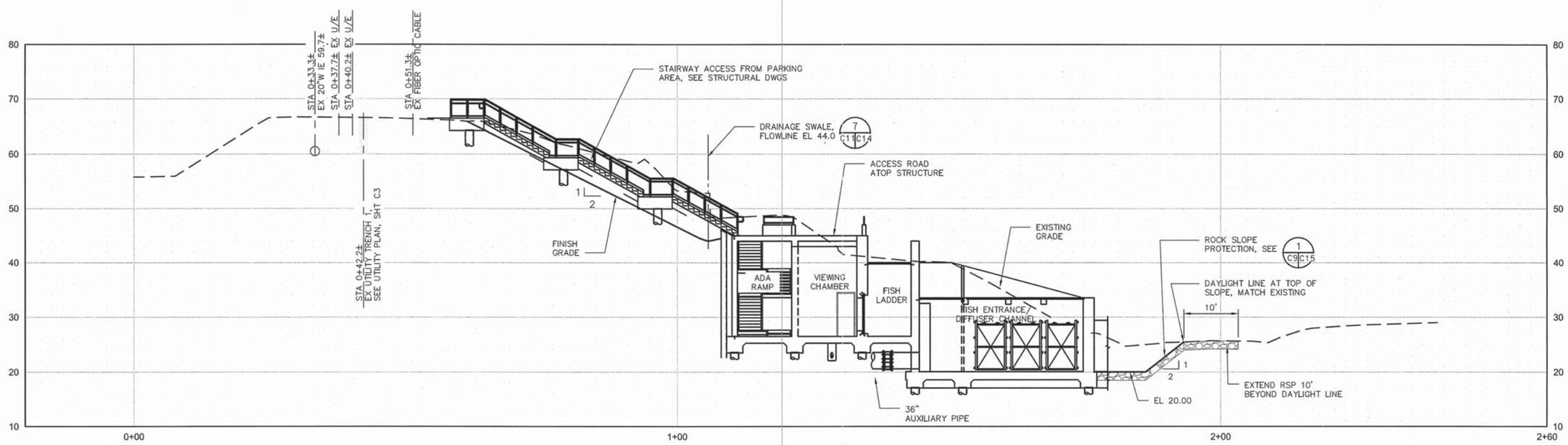

SECTION A C2 C11

0 5 10 20 30 FT

SCALE: 1"=10'

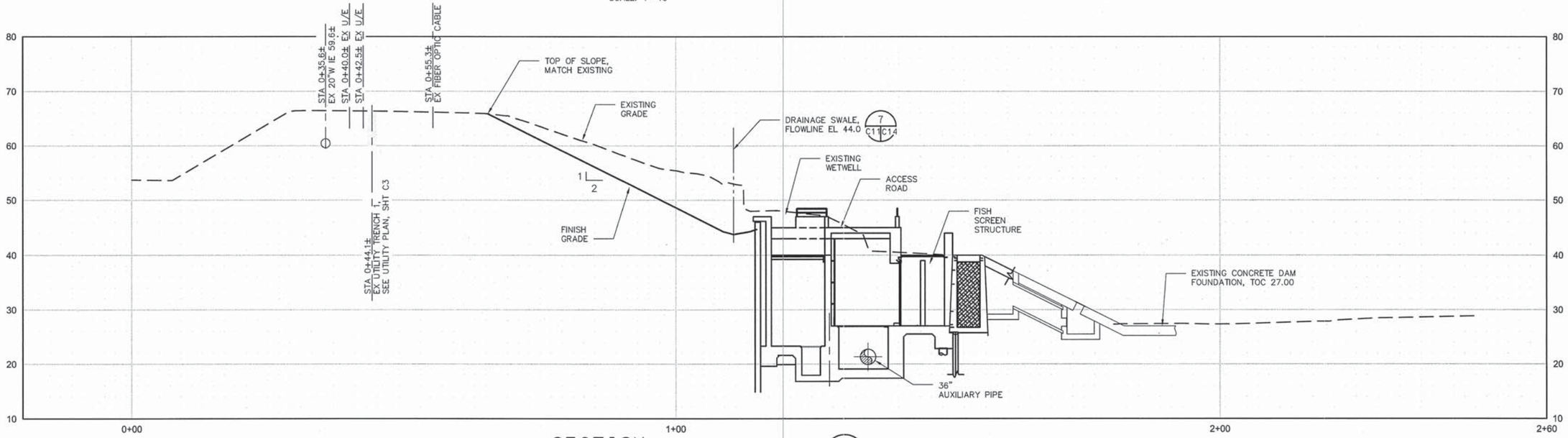

SECTION B C2 C11

0 5 10 20 30 FT

SCALE: 1"=10'

BAR LENGTH ON ORIGINAL DRAWING EQUALS ONE INCH. ADJUST SCALE ACCORDINGLY

HDR Fisheries DESIGN CENTER

REGISTERED PROFESSIONAL ENGINEER LANCE M. JONES 68374 Exp. 9/30/15 CIVIL STATE OF CALIFORNIA 3/17/14

NO.	DATE	REVISION	BY
A	3/17/14	ISSUED FOR BIDS	LMJ

SONOMA COUNTY WATER AGENCY

SCALE: AS NOTED | DATE: 3/17/14
DRAWN: PVM
REVIEWED:

Sonoma County Water Agency
Mirabel Fish Screen and Fish Ladder Replacement
SITE SECTIONS 4

FILE NAME: 164479_c11.dwg
CONTRACT NUMBER: ####
DRAWING NUMBER: C11
SHEET 25 OF 99

C:\pwworking\sea\d0645475\164479_C11

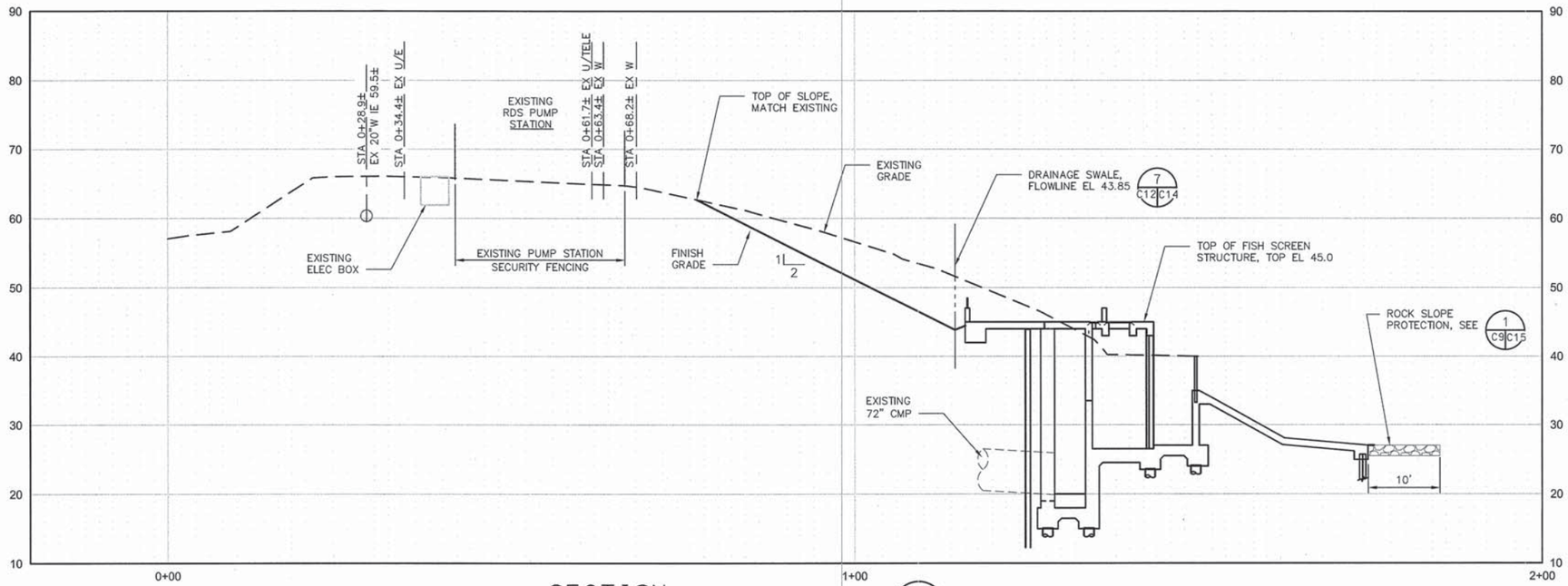

SECTION A C2 C12

0 5 10 20 30 FT

SCALE: 1"=10'

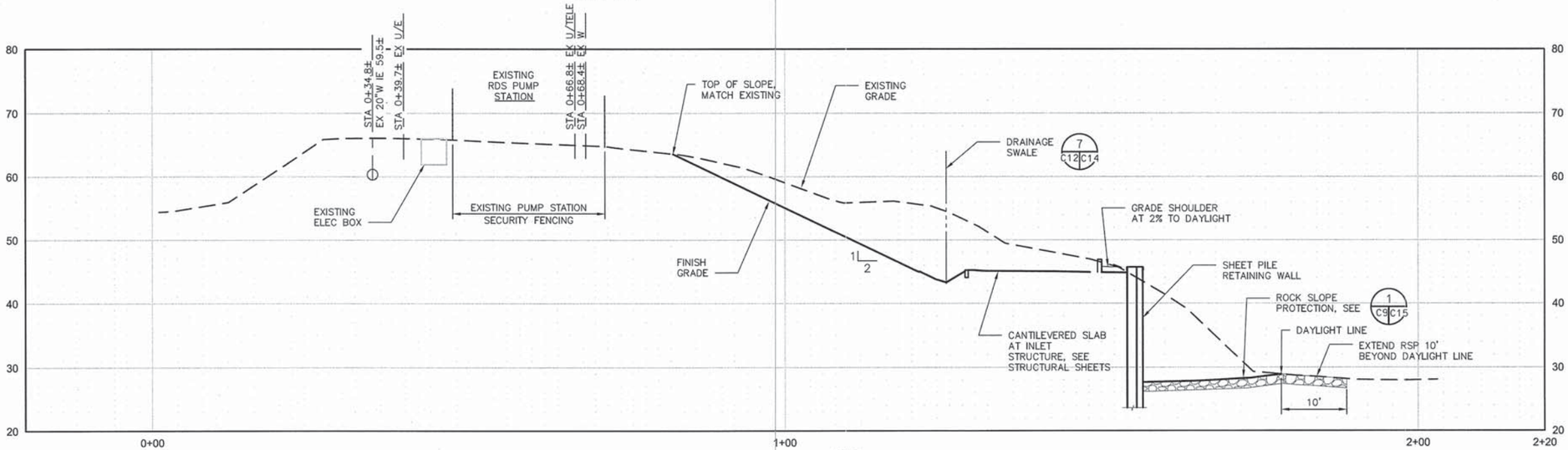

SECTION B C2 C12

0 5 10 20 30 FT

SCALE: 1"=10'

BAR LENGTH ON ORIGINAL DRAWING EQUALS ONE INCH. ADJUST SCALE ACCORDINGLY

HDR Fisheries DESIGN CENTER

REGISTERED PROFESSIONAL ENGINEER LANCE M. JONES 68374 Exp. 9/30/15 CIVIL STATE OF CALIFORNIA

3/17/14

NO.	DATE	REVISION	BY
A	3/17/14	ISSUED FOR BIDS	LMJ

SONOMA COUNTY WATER AGENCY

SCALE: AS NOTED | DATE: 3/17/14

DRAWN: PVM

REVIEWED: Steve Kelly, Kent Gylfe

Sonoma County Water Agency

Mirabel Fish Screen and Fish Ladder Replacement

SITE SECTIONS 5

FILE NAME: 164479_c12.dwg

CONTRACT NUMBER: ####

DRAWING NUMBER: C12

SHEET 26 OF 99

C:\pwworking\sea\d0645475\164479_C12

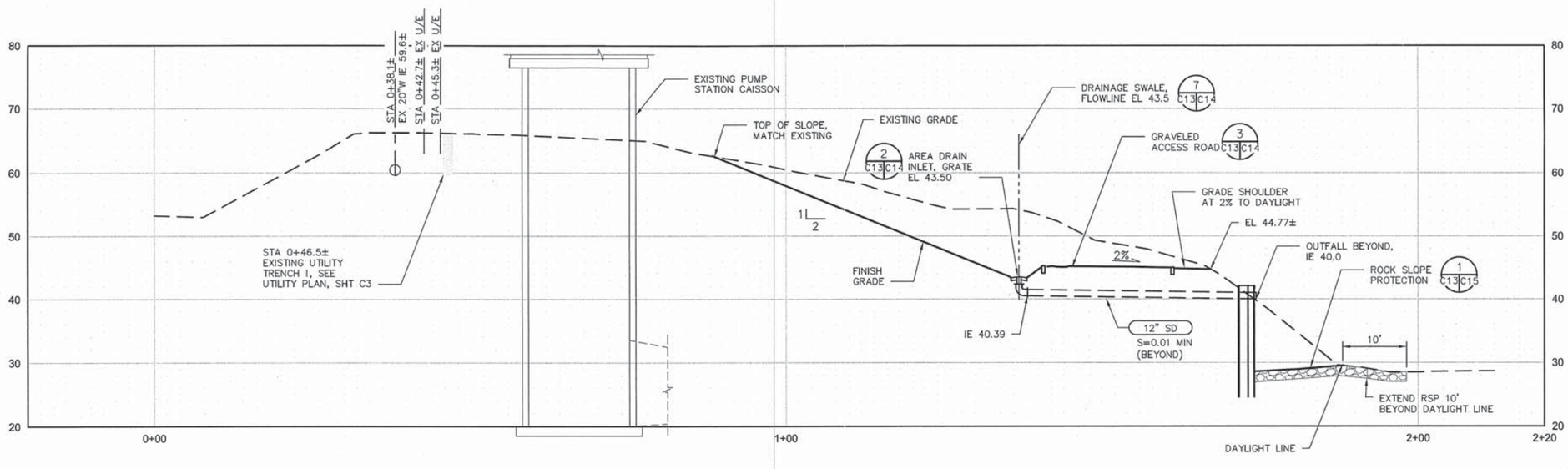

SECTION A C2 C13

0 5 10 20 30 FT

SCALE: 1"=10'

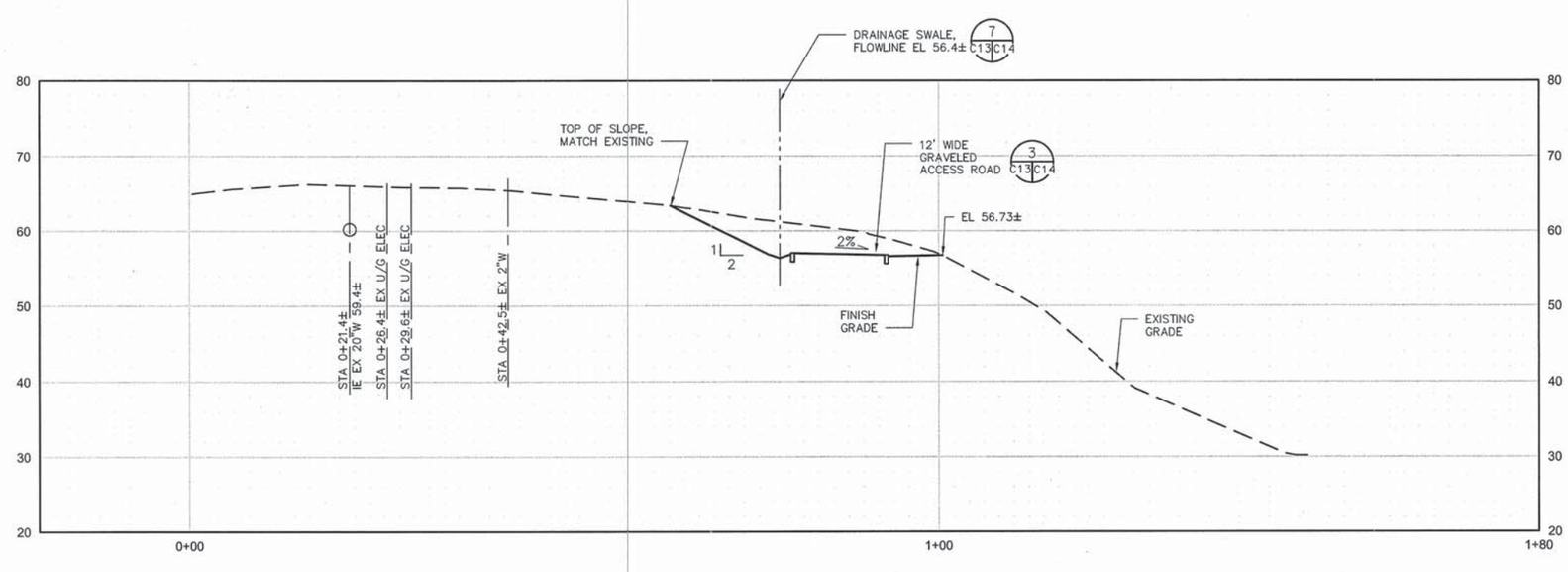

SECTION B C2 C13

0 5 10 20 30 FT

SCALE: 1"=10'

BAR LENGTH ON ORIGINAL DRAWING EQUALS ONE INCH. ADJUST SCALE ACCORDINGLY

HDR Fisheries DESIGN CENTER

REGISTERED PROFESSIONAL ENGINEER LANCE M. JONES 68374 Exp. 9/30/15 CIVIL STATE OF CALIFORNIA 3/17/14

NO.	DATE	REVISION	BY
A	3/17/14	ISSUED FOR BIDS	LMJ

SONOMA COUNTY WATER AGENCY

SCALE: AS NOTED | DATE: 3/17/14
DRAWN: PVM
REVIEWED:

Sonoma County Water Agency

Mirabel Fish Screen and Fish Ladder Replacement

SITE SECTIONS 6

FILE NAME: 164479_c13.dwg
CONTRACT NUMBER: ####

DRAWING NUMBER: C13

SHEET 27 OF 99

C:\pwworking\sec\d0645475\164479_C13

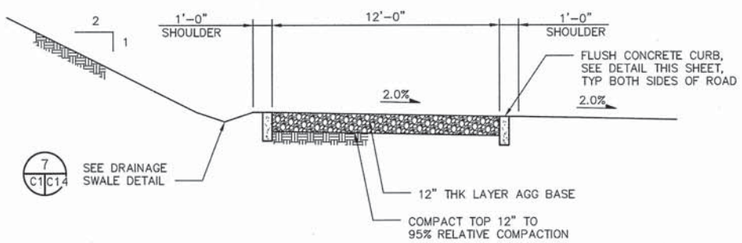

GRAVELED ROADWAY SECTION

3 C1 C14

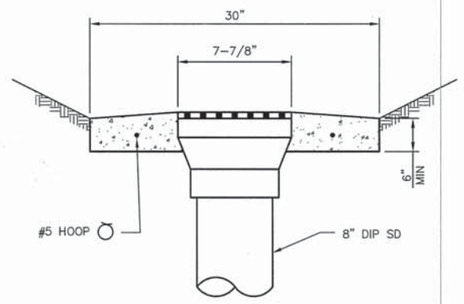

AREA DRAIN DETAIL

NTS

2 C3 C14

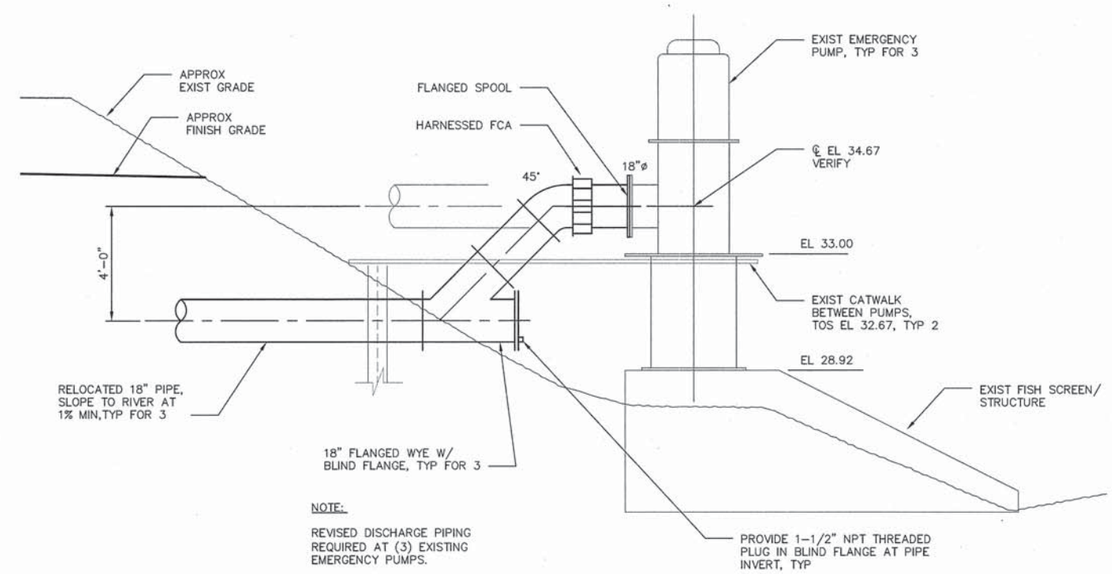

NOTE:

REVISED DISCHARGE PIPING REQUIRED AT (3) EXISTING EMERGENCY PUMPS.

PIPING MODIFICATIONS EMERGENCY PUMP STA

1 C1 C14

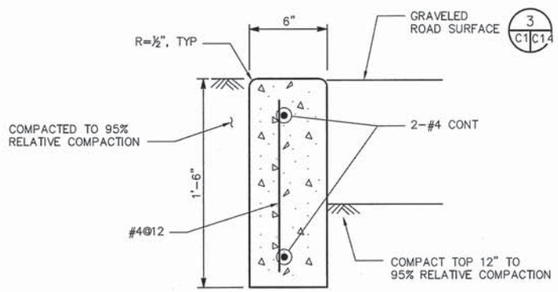

FLUSH CURB DETAIL

NTS

4 C1 C14

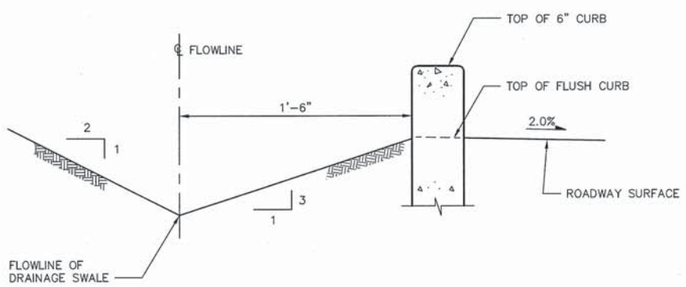

DRAINAGE SWALE DETAIL

NTS

7 C1 C14

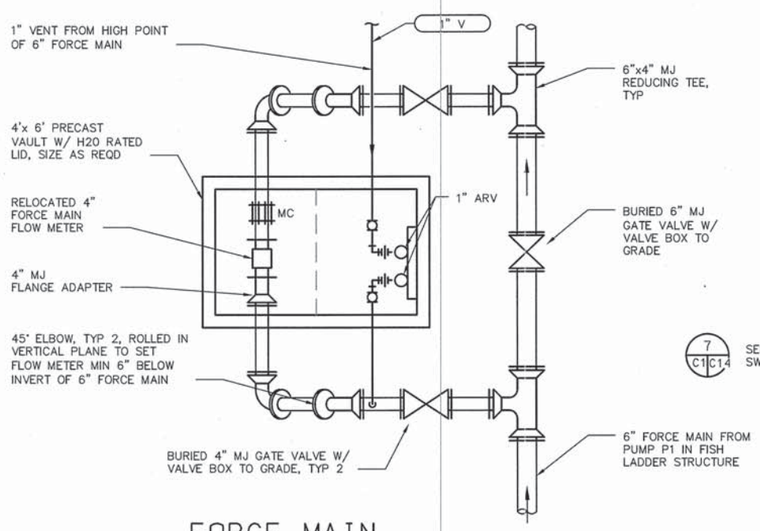

FORCE MAIN METER VAULT DETAIL

NTS

6 C3 C14

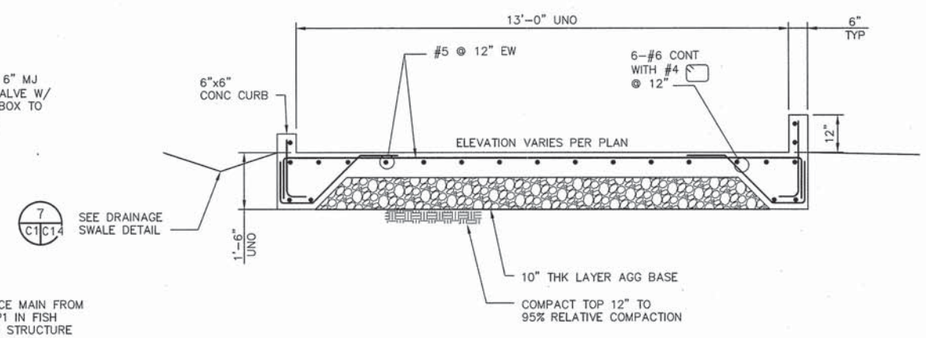

CONCRETE ROADWAY SECTION

NTS

5 C1 C14

BAR LENGTH ON ORIGINAL DRAWING EQUALS ONE INCH. ADJUST SCALE ACCORDINGLY

HDR Fisheries DESIGN CENTER

REGISTERED PROFESSIONAL ENGINEER LANCE M. JONES 68374 Exp. 9/30/15 CIVIL STATE OF CALIFORNIA 3/17/14

NO.	DATE	REVISION	BY
A	3/17/14	ISSUED FOR BIDS	LMJ

SONOMA COUNTY WATER AGENCY

SCALE: AS NOTED | DATE: 3/17/14
DRAWN: PVM
REVIEWED:

Sonoma County Water Agency
Mirabel Fish Screen and Fish Ladder Replacement
CIVIL DETAILS 1

FILE NAME: 164479_c14.dwg
CONTRACT NUMBER: ####
DRAWING NUMBER: C14
SHEET 28 OF 99

C:\pwworking\sea\d0645475\164479_C14

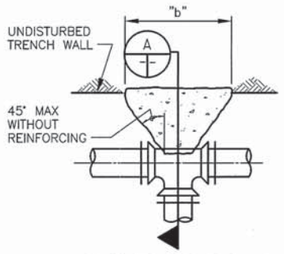

BLOCKED TEE OR PLUG

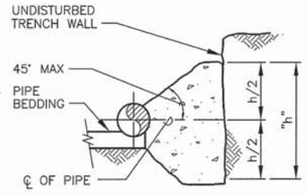

SECTION A

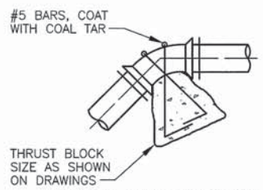

VERTICAL REACTION BLOCKING

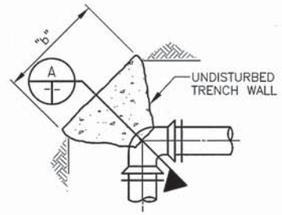

BLOCKED BEND

REACTION BLOCKING SCHEDULE			
PIPE SIZE	LOCATION	"b" FT	"h" FT
3" & 4"	45° BEND	1	1
3" & 4"	90° BEND OR TEE	2	1
6"	45° BEND	2	1
6"	90° BEND OR TEE	2	2
8"	45° BEND	2	1.5
8"	90° BEND OR TEE	2.5	2.5
10"	45° BEND	2.5	2.5
10"	90° BEND OR TEE	3.5	3
12"	45° BEND	3.5	3
12"	90° BEND OR TEE	4	4

THRUST BLOCK DETAIL

NO SCALE

NOTES:

1. FOR LOCATION SEE DRAWINGS.
2. SIZE TO BE 1 1/2 INCH UNLESS OTHERWISE NOTED.
3. PROVIDE WARNING SIGN WHEN USED FOR NON-POTABLE WATER.
4. PROVIDE HOSE RACK AT EACH LOCATION.

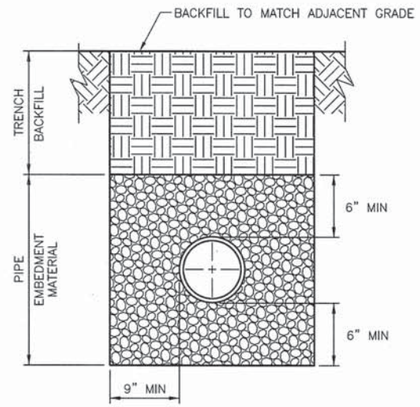

PIPE EMBEDMENT DETAIL

NO SCALE

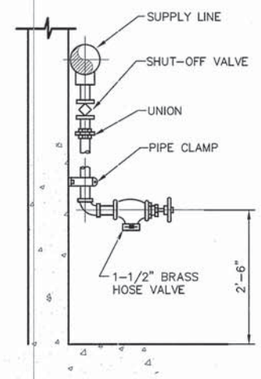

HOSE BIB/ YARD HYDRANT DETAIL

NO SCALE

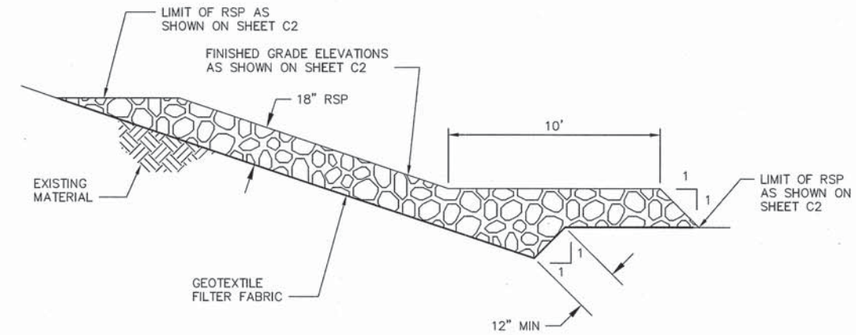

ROCK SLOPE PROTECTION DETAIL

NO SCALE

1 / C2 C15

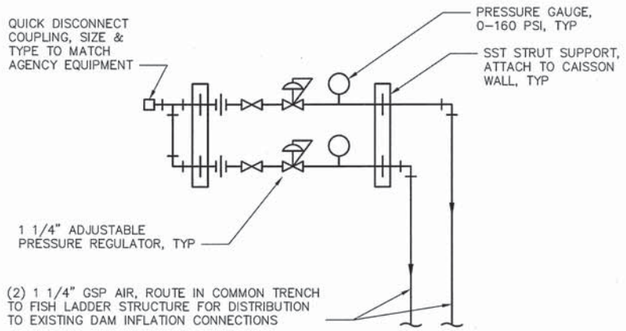

DAM INFLATION AIR MANIFOLD DETAIL

NO SCALE

1 / C3 C15

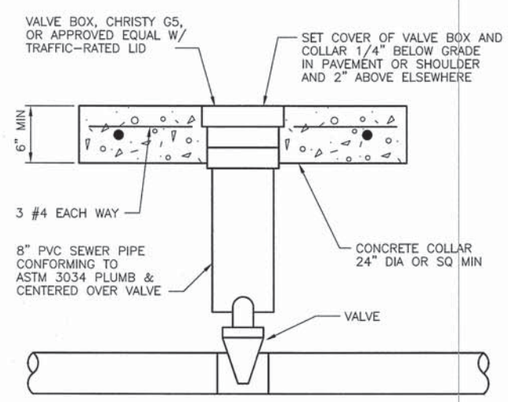

VALVE BOX DETAIL

NO SCALE

BAR LENGTH ON ORIGINAL DRAWING EQUALS ONE INCH. ADJUST SCALE ACCORDINGLY

HDR Fisheries DESIGN CENTER

REGISTERED PROFESSIONAL ENGINEER LANCE M. JONES 68374 Exp. 9/30/15 CIVIL STATE OF CALIFORNIA 3/17/14

NO.	DATE	REVISION	BY
A	3/17/14	ISSUED FOR BIDS	LMJ

SONOMA COUNTY WATER AGENCY

SCALE: AS NOTED | DATE: 3/17/14
DRAWN: PVM
REVIEWED:

Sonoma County Water Agency
Mirabel Fish Screen and Fish Ladder Replacement
CIVIL DETAILS 2

FILE NAME: 164479_c15.dwg
CONTRACT NUMBER: ####
DRAWING NUMBER: C15
SHEET 29 OF 99

C:\pwworking\sec\d0645475\164479_C15

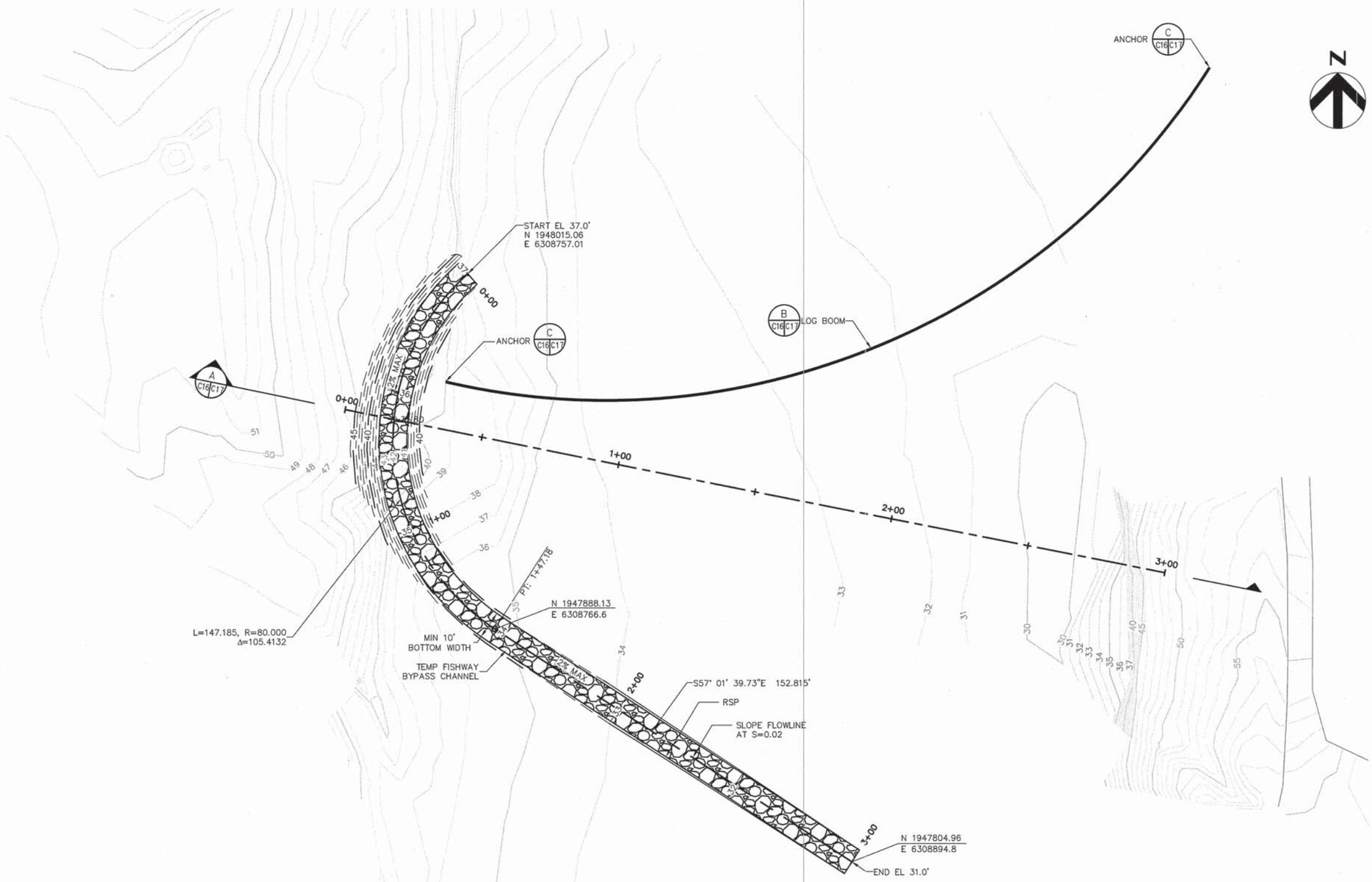

NOTES:

1. CONTRACTOR MAY SUBMIT AN OPTIONAL COFFERDAM DESIGN FOR REVIEW AND APPROVAL FROM THE OWNER.
2. HORIZONTAL DATUM: CALIFORNIA COORDINATE SYSTEM, ZONE 2 NORTH AMERICAN DATUM OF 1983

COFFERDAM SITE PLAN

1 / C16

0 20 40 60 FT

SCALE: 1"=20'

BAR LENGTH ON ORIGINAL DRAWING EQUALS ONE INCH. ADJUST SCALE ACCORDINGLY

HDR Fisheries DESIGN CENTER

REGISTERED PROFESSIONAL ENGINEER LANCE M. JONES 68374 Exp. 9/30/15 CIVIL STATE OF CALIFORNIA 3/17/14

NO.	DATE	REVISION	BY
A	3/17/14	ISSUED FOR BIDS	LMJ

SONOMA COUNTY WATER AGENCY

SCALE: AS NOTED
DATE: 3/17/14
DRAWN: PVM
REVIEWED:

Sonoma County Water Agency
Mirabel Fish Screen and Fish Ladder Replacement
WOHLER DAM SITE PLAN

FILE NAME: 164479_c16.dwg
CONTRACT NUMBER: ####
DRAWING NUMBER: C16
SHEET 30 OF 99

C:\pwworking\sea\d0645475\164479_C16

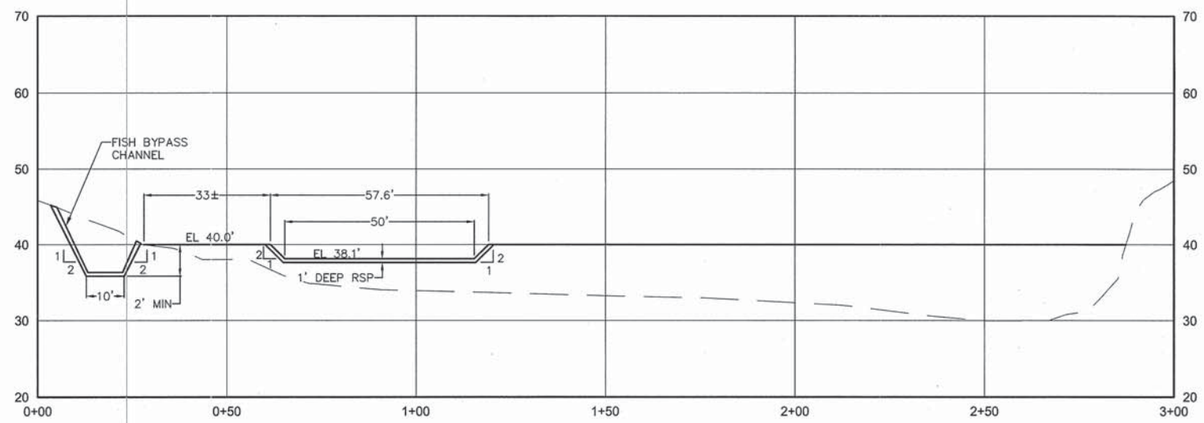

COFFERDAM PROFILE

A
C16 C17

HORIZ SCALE: 1" = 20'
VERT SCALE: 1" = 10'

0 20 40 60 FT
SCALE: 1"=20'

SITE LOCATION MAP

1
C17 C17

NO SCALE

N

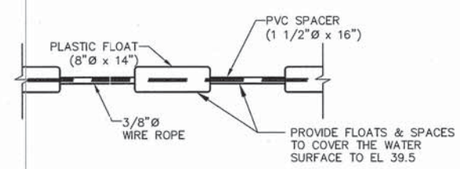

LOG BOOM

B
C16 C17

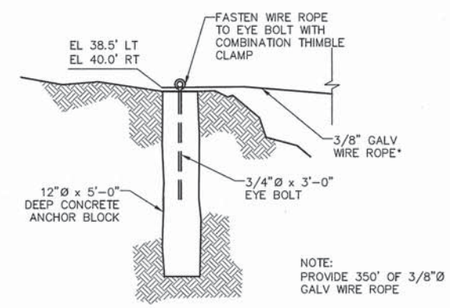

ANCHOR DETAILS

C
C16 C17

BAR LENGTH ON ORIGINAL DRAWING EQUALS ONE INCH. ADJUST SCALE ACCORDINGLY

HDR Fisheries DESIGN CENTER

REGISTERED PROFESSIONAL ENGINEER
LANCE M. JONES
68374
Exp. 9/30/15
CIVIL
STATE OF CALIFORNIA
3/17/14

NO.	DATE	REVISION	BY
A	3/17/14	ISSUED FOR BIDS	LMJ

SONOMA COUNTY WATER AGENCY

SCALE: AS NOTED
DATE: 3/17/14
DRAWN: PVM
REVIEWED:

Sonoma County Water Agency
Mirabel Fish Screen and Fish Ladder Replacement
WOHLER DAM SECTIONS

FILE NAME: 164479_c17.dwg
CONTRACT NUMBER: ####
DRAWING NUMBER: C17
SHEET 31 OF 99

C:\pwworking\sea\d0645475\164479_C17

GENERAL STRUCTURAL NOTES (GSN)

GENERAL

G1 SCOPE
THE NOTES ON THIS SHEET AND THE STANDARD STRUCTURAL DETAILS ARE GENERAL AND APPLY TO THE ENTIRE PROJECT WHETHER SPECIFICALLY CALLED OUT OR NOT, EXCEPT WHERE THERE ARE SPECIFIC INDICATIONS TO THE CONTRARY ON STRUCTURAL SHEETS. IF THERE ARE QUESTIONS, THEY SHALL BE SUBMITTED TO THE STRUCTURAL ENGINEER AND ANSWERED IN WRITING PRIOR TO CONSTRUCTION.

G2 APPLICABLE SPECIFICATIONS AND CODES
A. CALIFORNIA BUILDING CODE 2010, WITH APPLICABLE EDITIONS OF THE CODE REFERENCED STANDARDS.
B. ASCE7-05
C. ACI-318-05
D. ACI-350-06
E. LOCAL JURISDICTION AMENDMENTS

G3 DESIGN CRITERIA
1. APPLIES TO ALL STRUCTURES (UNO)
A. DEAD LOAD:
1. ACTUAL TRIBUTARY STRUCTURE WEIGHT
2. SUPERIMPOSED DEAD LOAD: ACTUAL WT. OF ANY MECHANICAL EQUIPMENT.
B. LIVE LOADS:

1.	SLAB ON GRADE:	250 PSF
2.	PROCESS EQUIPMENT AREAS:	300 PSF
3.	ELECTRICAL EQUIPMENT ROOMS:	250 PSF
4.	STORAGE, SHOP, MAINTENANCE:	200 PSF
5.	CORRIDORS, WALKWAYS, STAIRWAYS:	100 PSF
6.	OFFICES, LABS:	100 PSF
7.	ROOF:	20 PSF (NOT REDUCIBLE)

C. WIND:

1.	BASIC WIND SPEED:	V=110 MPH
2.	EXPOSURE:	C
3.	IMPORTANCE FACTOR:	I=1.15
4.	TOPOGRAPHIC FACTOR	K_{zt} =1.0
5.	ADJUSTMENT FACTOR	λ =1.29

D. SEISMIC:
1. ABOVE GRADE, NON WATER BEARING STRUCTURES:
a. OCCUPANCY CATEGORY: II
b. IMPORTANCE FACTOR: 1.0
c. SPECTRAL RESPONSE ACCELERATION, S_S = 1.5
d. SPECTRAL RESPONSE ACCELERATION, S_1 = 0.6
e. SITE CLASS: D
f. SEISMIC DESIGN CATEGORY: D
g. SPECTRAL RESPONSE COEFFICIENT, SD_s = 1.00
h. SPECTRAL RESPONSE COEFFICIENT, SD_1 = 0.6
i. BASIC SEISMIC FORCE RESISTING SYSTEM SEE TABLE BELOW.
j. ANALYSIS PROCEDURE AND EQUIVALENT LATERAL FORCE ANALYSIS.
k. DESIGN BASIC SHEAR: SEE TABLE BELOW.
l. SEISMIC RESPONSE COEFFICIENT: SEE TABLE BELOW
m. RESPONSE MODIFICATION FACTOR: SEE TABLE BELOW.

STRUCTURE	i. BASIC SEISMIC FORCE RESISTING SYSTEM:	k. DESIGN BASE SHEAR	l. SEISMIC RESPONSE COEFFICIENT (C_S)	m. RESPONSE MODIFICATION FACTOR "R"
ALL	SPECIAL REINFORCED CONCRETE SHEAR WALLS	$V = C_S * W$ W IS THE EFFECTIVE SEISMIC WEIGHT	0.20	5

E. SNOW LOAD: NOT APPLICABLE

G4 SAFETY:
SAFETY AND STRUCTURE STABILITY DURING CONSTRUCTION ARE THE SOLE RESPONSIBILITY OF THE CONTRACTOR. STRUCTURES HAVE BEEN DESIGNED TO RESIST THE DESIGN LIVE LOADS ONLY AS A COMPLETED STRUCTURE.

G5 OPENINGS:
OPENINGS FOR PIPES, DUCTS, CONDUITS, ETC. ARE NOT ALL SHOWN ON THE STRUCTURAL DRAWINGS. COORDINATE AND PROVIDE OPENINGS AS REQUIRED TO ACCOMMODATE ALL WORK SHOWN OR SPECIFIED IN THE CONTRACT DOCUMENTS AND OTHERWISE REQUIRED FOR THE FURNISHING OF A FUNCTIONALLY COMPLETE PROJECT. REINFORCE AROUND OPENINGS PER STANDARD STRUCTURAL DETAILS UNLESS OTHERWISE SHOWN.

G7 SPECIAL INSPECTIONS
SPECIAL INSPECTIONS ARE REQUIRED IN ACCORDANCE WITH CHAPTER 1 AND CHAPTER 17 OF THE CBC. PAYMENT FOR THESE INSPECTIONS IS NOT THE RESPONSIBILITY OF THE CONTRACTOR. CONTRACTOR SHALL PROVIDE FOR FULL ACCESS TO THE WORK BY THE SPECIAL INSPECTOR AND SHALL PROVIDE FOR THESE INSPECTIONS IN HIS CONSTRUCTION SCHEDULE IN ACCORDANCE WITH THE SPECIFICATIONS. SEE DRAWING S2 FOR SPECIAL INSPECTION REQUIREMENTS.

G8 STANDARD DETAILS
THE STANDARD DETAILS DEPICT TYPICAL DETAILING TO BE USED ON THIS PROJECT. IF CONDITIONS ARE NOT EXPLICITLY SHOWN ON THE DRAWINGS THEY SHALL BE MADE SIMILAR TO THE STANDARD DETAILS. OBTAIN APPROVAL OF ENGINEER IN WRITING FOR SIMILAR CONDITIONS PRIOR TO CONSTRUCTION.

G9 THE CONTRACTOR SHALL FIELD VERIFY ALL DIMENSIONS AND ELEVATIONS OF EXISTING CONSTRUCTION AS REQUIRED TO COORDINATE NEW CONSTRUCTION. SUBMIT REQUIRED CHANGES FOR APPROVAL.

G10 CONTRACTOR TO SUBMIT FOR REVIEW ALL EQUIPMENT SIZES, OPERATING WEIGHTS, VIBRATION FORCES, SUPPORT LOCATIONS, ALONG WITH ANY FLOOR OPENINGS, NOTCHES, AND RECESSES REQUIRED BY SUCH EQUIPMENT. CONCRETE SUPPORT PADS AND/OR FRAMING REQUIRED TO SUPPORT SAID EQUIPMENT SHALL NOT BE FABRICATED AND PLACED UNTIL THE CONCRETE SUPPORT PADS AND/OR FRAMING IS APPROVED TO SUPPORT THE EQUIPMENT.

G11 THE FOLLOWING NON-CONTRACTUAL GEOTECHNICAL REPORT WAS DEVELOPED FOR THIS PROJECT AND IS THE BASIS OF THIS STRUCTURAL DESIGN:
GEOTECHNICAL FIRM NAME: BRUNSING ASSOCIATES, INC.
ADDRESS: 5468 SKYLANE BLVD. SUITE 201
SANTA ROSA, CALIFORNIA 95403
REPORT NUMBER: 12225.01
REPORT DATE: MARCH 12, 2013
ALLOWABLE [NET] SOIL BEARING = 2000 PSF FOR SPREAD FOOTINGS AND 1500 PSF FOR MAT FOUNDATION AT 36 IN MIN EMBEDMENT BELOW THE LOWEST ADJACENT SUBGRADE.

G12 STRUCTURE FOOTINGS AND PAD PERIMETERS SHALL EXTEND INTO SUBGRADE A MINIMUM OF 24 INCHES. SUBGRADE IS THE TOP SURFACE OF NATIVE SOIL, NATIVE SOIL COMPACTED DURING SITE PREPARATION OR ENGINEERED FILL. EXCEPTIONS: CONCRETE SIDEWALK, RAMPS, AND STAIR LANDING PADS.

CONCRETE:

C1 DESIGN STRENGTHS:
f'c = 4500 PSI
fy = 60,000 PSI

C2 CONCRETE COVER
UNLESS OTHERWISE NOTED, PROVIDE CONCRETE COVER FOR REINFORCING PER DETAIL 2/S5.

C3 SEE SPECIFICATIONS FOR REINFORCING PLACEMENT REQUIREMENTS.

C4 REFER TO OTHER DISCIPLINE DRAWINGS PRIOR TO CONSTRUCTION FOR EMBEDDED ITEMS AND PENETRATIONS NOT SHOWN ON STRUCTURAL DRAWINGS. AS REQUIRED TO ACCOMMODATE ALL WORK SHOWN OR SPECIFIED IN THE CONTRACT DOCUMENTS AND OTHERWISE REQUIRED FOR THE FURNISHING OF A FUNCTIONALLY COMPLETE PROJECT. REINFORCE AROUND OPENINGS PER STANDARD STRUCTURAL DETAILS UNLESS OTHERWISE SHOWN.

C5 PROVIDE 3/4" CHAMFERS AT ALL EXPOSED EDGES AND 1/2" CHAMFERS AT JOINTS AS SHOWN. NOT ALL CHAMFERS MAY BE SHOWN ON DRAWINGS.

C6 FIELD ADJUST REINFORCING AT OPENINGS AND EMBEDDED ITEMS AS INDICATED.

C7 ANCHOR BOLTS NOT SPECIFIED BY ENGINEER SHALL BE DESIGNED AND CERTIFIED BY A REGISTERED PROFESSIONAL ENGINEER, RETAINED BY THE CONTRACTOR, IN ACCORDANCE WITH APPLICABLE PROJECT AND CODE REQUIREMENTS. SUBMIT AS A SHOP DRAWING FOR REVIEW AND APPROVAL BY THE ENGINEER. COORDINATE LOCATION, SIZE AND EMBEDMENT PRIOR TO CASTING CONCRETE.

C8 CONTINUOUS WATERSTOP SHALL BE INSTALLED IN JOINTS SUBJECT TO STATIC WATER PRESSURE. WHERE SHOWN IN SECTION OR NOT.

C9 UNLESS SPECIFICALLY AUTHORIZED BY ENGINEER IN WRITING, NO WELDING OF REINFORCING BARS OR TORCHING TO BEND REINFORCING BARS SHALL BE ALLOWED WITHOUT SPECIFIC APPROVAL FROM THE STRUCTURAL ENGINEER.

C10 CONTRACTOR SHALL SUBMIT A CONCRETE PLACEMENT PLAN IDENTIFYING JOINT TYPES, JOINT LOCATIONS AND CONCRETE PLACEMENT SEQUENCE.

C11 ALL CAST IN PLACE AND POST-INSTALLED ANCHORS INDICATED IN THE STRUCTURAL DOCUMENTS SHALL COMPLY WITH APPENDIX D OF ACI 318 AND CHAPTER 19 OF THE CBC. ALL EXPANSION AND ADHESIVE ANCHORS SHALL HAVE THE ICC REPORT SHOWING EQUIVALENT LOAD CAPACITY. SUBMIT AND INSTALL PER THE ICC EVALUATION REPORT.

C12 UNLESS OTHERWISE NOTED, ALL WALL REINFORCING BARS SHALL BE CONTINUOUS AROUND CORNERS AND THROUGH COLUMNS OR PILASTERS. REINFORCEMENT SHALL BE EXTENDED INTO CONNECTING WALLS, AND LAPPED ON THE OPPOSITE FACE OF THE CONNECTING WALLS, AS INDICATED ELSEWHERE ON THIS SHEET OR ON THE DRAWINGS. VERTICAL WALL BARS SHALL BE LAPPED WITH DOWELS FROM BASE SLABS AND EXTENDED INTO THE TOP FACE OF ROOF OR FLOOR SLABS AND LAPPED WITH TOP SLAB REINFORCEMENT. UNLESS INDICATED OTHERWISE, CONTRACTOR MAY SPLICE CONTINUOUS SLAB OR LONGITUDINAL BEAM BARS AT LOCATIONS OF IT'S CHOOSING, EXCEPT THAT TOP BAR SPLICES SHALL BE LOCATED AT MIDSPAN AND BOTTOM BAR SPLICES SHALL BE LOCATED AT SUPPORTS. ALL REINFORCEMENT BENDS AND LAPS, UNLESS OTHERWISE NOTED, SHALL SATISFY STANDARD DETAILS ON S5.

C13 UNLESS OTHERWISE NOTED, WALL VERTICAL REINFORCING LAYER SHALL BE CLOSEST TO WALL SURFACE, AND WALL HORIZONTAL REINFORCING LAYERS SHALL BE PLACED ATTACHED TO AND BETWEEN VERTICAL LAYERS.

STEEL:

S1 DESIGN STRENGTHS:

WIDE FLANGE AND TEES:	Fy=50 KSI
PIPES:	Fy=35 KSI
STAINLESS STEEL	Fy=33 KSI
HSS SECTIONS	Fy=46 KSI
ALL OTHER PLATES AND SHAPES:	Fy=36 KSI

S2 DIMENSIONS:
TO CENTERLINES OF COLUMNS AND BEAMS, TOP SURFACES OF BEAMS AND TUBES AND BACKS OF CHANNELS AND ANGLES UNO.

S3 ELEVATIONS:
TOP OF STEEL REFERS TO TOP SURFACE OF MEMBER OR FLANGE UNLESS NOTED OTHERWISE.

S4 WHEN FILLET WELD SIZE IS NOT INDICATED, PROVIDE MAXIMUM WELD SIZE BASED ON MATERIAL THICKNESS IN ACCORDANCE WITH AISC SPECIFICATIONS.

S5 ALL BOLTED STRUCTURAL CONNECTIONS ARE BEARING TYPE CONNECTIONS UNLESS OTHERWISE SPECIFIED TO BE SLIP-CRITICAL. PROVIDE LOAD INDICATING WASHERS AT SLIP-CRITICAL CONNECTIONS.

S6 CONFORM TO AISC 360, STEEL CONSTRUCTION MANUAL AND AISC 341, SEISMIC DESIGN MANUAL.

S7 ALL STEEL BEAMS SHALL RECEIVE STANDARD CAMBER PER THE SPECIFICATIONS UNLESS NOTED OTHERWISE ON THE PLANS. BEAMS REQUIRING SPECIAL CAMBER ARE DENOTED ON THE BEAMS SHOWN ON THE FRAMING PLANS. EXAMPLE: (+1/2") INDICATES 1/2".

S8 ENCASED STEEL:
STANDARD SHAPE STRUCTURAL STEEL COMPLETELY ENCASED IN CONCRETE OR GROUT SHALL NOT BE GALVANIZED OR PAINTED AND SHALL HAVE A CLEAN SURFACE FOR BONDING TO CONCRETE OR GROUT WHEN IT IS PLACED.

S9 PAINTING:
STRUCTURAL STEEL SHALL BE PAINTED IN ACCORDANCE WITH SPECIFICATIONS.

S10 STAINLESS STEEL:
STAINLESS STEEL CONSTRUCTION SHALL BE IN ACCORDANCE WITH AISI SPECIFICATIONS. UNLESS OTHERWISE NOTED, STEEL IN CONTACT WITH SEWAGE SHALL BE AISI TYPE 316 STAINLESS STEEL. ALL STEEL WITHIN ONE FOOT HORIZONTALLY OR VERTICALLY OF SEWAGE SHALL BE STAINLESS STEEL. WHERE NOT SPECIFICALLY INDICATED ON DRAWINGS OR IN ABOVE NOTE, STAINLESS STEEL SHALL BE AISI TYPE 304.

ALUMINUM:

A1 STRUCTURAL ALUMINUM YIELD STRENGTHS
STRUCTURAL ALUMINUM: Fy=35 KSI
STRUCTURAL ALUMINUM IS ALLOY 6061-T6 UNO

A2 DIMENSIONS:
TO CENTERLINES OF COLUMNS AND BEAMS, TOP SURFACES OF BEAMS AND TUBES AND BACKS OF CHANNELS AND ANGLES UNO.

A3 ELEVATIONS:
TOP OF ALUMINUM REFERS TO TOP SURFACE OR FLANGE OF MEMBER UNO.

A4 WHEN FILLET WELD SIZE IS NOT INDICATED, PROVIDE MAXIMUM WELD SIZE FOR THE MATERIAL THICKNESS IN ACCORDANCE WITH THE LATEST EDITION OF THE "ALUMINUM DESIGN MANUAL" BY THE ALUMINUM ASSOCIATION.

A5 ALUMINUM IN CONTACT WITH DISSIMILAR MATERIALS OR CONCRETE:
CONTACT SURFACES SHALL BE PROVIDED WITH GALVANIC SEPARATION PER SPECIFICATIONS.

DEFERRED APPROVALS:

CONTRACTOR TO FURNISH, DESIGN DETAIL, AND INSTALL STRUCTURAL COMPONENTS LISTED BELOW. INSTALLATION AND DESIGN SHALL BE IN CONFORMANCE WITH THE 2010 CALIFORNIA BUILDING CODE (CBC), OSHA REGULATIONS, DRAWINGS, AND SPECIFICATIONS. CALCULATIONS FOR ALL MEMBERS AND CONNECTIONS (INCLUDING ANCHOR BOLTS ATTACHING STRUCTURAL COMPONENTS TO THEIR FOUNDATIONS) MUST BE PREPARED, STAMPED AND SIGNED BY A REGISTERED CIVIL OR STRUCTURAL ENGINEER LICENSED IN THE STATE OF CALIFORNIA AND MUST BE SUBMITTED WITH SHOP DRAWINGS. SHOP DRAWINGS MUST BE STAMPED AND SIGNED BY THE REGISTERED CIVIL OR STRUCTURAL ENGINEER THAT PREPARES THE CALCULATIONS.

1. PLATFORMS AND WALKWAYS.
2. METAL STAIRS.

BAR LENGTH ON ORIGINAL DRAWING EQUALS ONE INCH. ADJUST SCALE ACCORDINGLY

HDR Fisheries DESIGN CENTER

REGISTERED PROFESSIONAL ENGINEER
DAVID TAVANGAR
No. 54655
EXP. 12/31/15
CIVIL
STATE OF CALIFORNIA
3/18/14

NO.	DATE	REVISION	BY
A	3/17/14	ISSUED FOR BIDS	OT

SONOMA COUNTY WATER AGENCY

SCALE: AS NOTED
DATE: 3/17/14
DRAWN: JKW
REVIEWED:

Sonoma County Water Agency
Mirabel Fish Screen and Fish Ladder Replacement
STANDARD STRUCTURAL NOTES

FILE NAME: 164479_s01.dwg
CONTRACT NUMBER: ####
DRAWING NUMBER: S1
SHEET 32 OF 99

C:\pwworking\sea\d0799528\164479_S01

SCHEDULE OF SPECIAL INSPECTION REQUIREMENTS

INSPECTION ITEM REQUIRED	FREQUENCY		CODE REFERENCE	REMARKS
	CONTINUOUS	PERIODIC		
SOIL & EARTHWORK				
OBSERVE PROOF-ROLLING OF SUBGRADE PRIOR TO BEGINNING FILL PLACEMENT		●	IBC 1704.7	
OBSERVE PLACEMENT AND COMPACTION OF FILL AND BACKFILL MATERIAL	●			
TESTING AND EVALUATION OF IN-PLACE DENSITY OF COMPACTED FILL AS WORK PROGRESSES.		●		
OBSERVE, TEST AS NEEDED, AND APPROVE FOOTING BEARING PRIOR TO PLACING OF REINFORCING STEEL AND CONCRETE.		●		
CONCRETE & REINFORCING STEEL				
OBSERVE PLACEMENT OF REINFORCING STEEL PRIOR TO THE CLOSING OF THE FORMS AND ARRIVAL OF CONCRETE ONSITE.		●		
OBSERVE WELDING OF STEEL REINFORCMENT, IF ANY	●		AWS D1.4; ACI 318-3.5.2; & IBC 1903.5.2	
VERIFY CORRECT MATERIAL USED, INCLUDING THE USE OF A706 IN WELDED SPLICES		●		
OBSERVE & VERIFY PLACEMENT OF EMBEDDED BOLTS PRIOR TO CONCRETE PLACEMENT.	●		IBC 1704.4	
VERIFY USE OF CORRECT CONCRETE MIX DESIGN AND REVIEW DELIVERY TICKETS		●		
SAMPLE FRESH CONCRETE AND MEASURE SLUMP, AIR CONTENT, AND TEMPERATURE DURING CONCRETE DELIVERY.	●		IBC 1704.4	ADDITIONAL CYLINDERS SHALL BE MADE AS NEEDED FOR EARLY FORM REMOVAL. NOTE: TWO CYLINDERS ARE REQUIRED FOR AN ACCEPTABLE TEST. A SINGLE CYLINDER BREAK IS UNACCEPTABLE FOR STRENGTH EVALUATION PURPOSES.
TAKE CONCRETE SPECIMENS FOR STRENGTH TESTS TO BE PERFORMED IN LAB. A MINIMUM OF FIVE (5) CYLINDERS SHALL BE MADE. TEST TWO AT SEVEN DAYS AND TWO AT 28-DAYS. THE 5TH CYLINDER SHALL BE TESTED AT 28 DAYS IF ONE OR BOTH OF THE 28-DAY CYLINDER RESULTS ARE BELOW REQUIRED STRENGTH.	●			
PERFORM CONCRETE STRENGTH TESTING IN LAB		●		
MAINTAIN A SPREADSHEET SHOWING DATE, SEQUENTIAL ORDER OF STRENGTH TEST RESULTS AND INDICATE RUNNING AVERAGE	●		ACI 318 PAR. 5.6.3.3	
OBSERVE FOR PROPER CONCRETE PLACEMENT	●		ACI 318 PAR. 5.9 & 5.10	
OBSERVE FOR PROPER CURING TEMPERATURE AND TECHNIQUES		●	ACI 318 PAR. 5.11, 5.12 & 5.13	
VERIFY THAT THE NECESSARY DESIGN STRENGTH HAS BEEN REACHED PRIOR TO THE REMOVAL OF FORMS.		●		
MEASURE FLOOR FLATNESS AND LEVELNESS AS NEEDED WHEN QUESTIONABLE SURFACES ARE OBSERVED.		●		
STRUCTURAL STEEL AND MOMENT FRAMES				
VERIFY FABRICATOR CERTIFICATION		●	IBC 1704.2	
HOLD PRE-CONSTRUCTION MEETINGS BETWEEN THE ENGINEER OF RECORD, THE FABRICATOR'S AND ERECTOR'S QUALITY CONTROL PERSONNEL, AND THE QUALITY ASSURANCE AGENCY TO PLAN AND DISCUSS THE PROJECT, FABRICATION PROCEDURES, ERECTION PROCEDURES, AND INSPECTION PROCEDURES.		●		FEMA-353 RECOMMENDATION.
INSPECT FABRICATION SHOP TO OBSERVE FABRICATION PROCEDURES		●		ONLY ONE INSPECTION IS REQUIRED UNLESS ON-SITE EVENTS INDICATE FURTHER INPECTIONS ARE NECESSARY.
VERIFY CORRECT STRUCTURAL STEEL MATERIAL DELIVERED TO JOB SITE		●	IBC 1708.4	MILL CERTS.
VERIFY JOINT WELD PROCEDURES ARE BEING USED IN ACCORDANCE WITH AWS		●	AWS D1.1	
VERIFY CONTRACTOR'S RECEIPT OF WELDER CERTIFICATIONS		●		
VERIFY CORRECT FILLER MATERIAL USED IN WELDS		●	AISC LRFD A3.5	
VISUALLY INSPECT ALL WELDS		●	AWS D1.1 & AWS	
PERFORM ULTRASONIC OR MAGNETIC PARTICLE TESTING ON ALL FULL PENETRATION WELDS		●		

SCHEDULE OF SPECIAL INSPECTION REQUIREMENTS (CONT)

INSPECTION ITEM REQUIRED	FREQUENCY		CODE REFERENCE	REMARKS
	CONTINUOUS	PERIODIC		
(CONT) STRUCTURAL STEEL AND MOMENT FRAMES				
OBSERVE & PERFORM ULTRASONIC OR MAGNETIC PERTICLE TESTING ON ALL WELDS (INCLUDING FULL & PARTIAL PENETRATION AND FILLET) ON CONNECTIONS WITHIN THE LATERAL FORCE RESISTING SYSTEM, BRACES & RIGID FRAMES	●			
PERFORM LIQUID DYE PENETRATION TESTING ON 20% OF ALL PARTIAL PENETRATION AND FILLET WELDS		●		
INSPECT STEEL FRAME JOINT DETAILS FOR COMPLIANCE WITH APPROVED CONTRACT DOCUMENTS		●	IBC 1704.3.2	
VERIFY CORRECT MATERIAL USED HIGH-STRENGTH BOLTS, NUTS, AND WASHERS		●	AISC LRFD A3.3	
OBSERVE & CHECK TIGHTNESS OF ALL BOLTS IN BEARING CONNECTIONS		●	IBC 1704.3.3; AISC LRFD M2.5	
OBSERVE & CHECK TORQUE OF ALL BOLTS IN SLIP-CRITICAL CONNECTIONS		●	IBC 1704.3.3; AISC LRFD M2.5	
OBSERVE AND TEST ALL FIELD APPLIED HEADED STUDS	●			
COLD-FORMED STEEL FRAMING				
OBSERVE & VERIFY USE OF CORRECT MEMBER SIZES, MATERIAL THICKNESS, FASTENERS, & WELDING		●		
GENERAL STRUCTURAL OBSERVATIONS				
CONDUCT DAILY VISUAL OBSERVATION OF THE STRUCTURAL SYSTEMS FOR GENERAL CONFORMANCE TO THE CONSTRUCTION DOCUMENTS. PREPARE WEEKLY REPORT OF OBSERVATIONS DESCRIBING WORK PROGRESS AND NON-CONFORMING ITEMS.		●		
SPECIAL INSPECTIONS FOR SEISMIC RESISTANCE				
PERFORM OBSERVATIONS, INSPECTIONS & TESTING FOR SEISMIC FORCE RESISTING SYSTEMS AS DESCRIBED IN THE ITEMS ABOVE.	●		IBC 1707	
OBSERVE & VERIFY ANCHORAGES FOR HVAC DUCTWORK, MECHANICAL UNITS, & PIPING SYSTEMS.		●	IBC 1705	
OBSERVE & VERIFY ANCHORAGES FOR ELECTRICAL EQUIPMENT USE FOR EMERGENCY OR STAND-BY SYSTEMS.		●		

OWNER REQUIREMENTS FOR SPECIAL INSPECTION AND QUALITY ASSURANCE

1. THE SPECIAL INSPECTION REQUIREMENTS INDICATED ON THIS SHEET ARE THE RESPONSIBILITY OF THE OWNER.
2. THE OWNER WILL EMPLOY QUALIFIED SPECIAL INSPECTORS TO PERFORM INSPECTIONS IN ACCORDANCE WITH THE BUILDING CODE. INSPECTORS WILL PERFORM ALL DUTIES AND RESPONSIBILITIES AS REQUIRED BY THE BUILDING CODE.
3. THE SCHEDULE SHOWN ON THIS SHEET CONTAINS A LIST OF SPECIAL INSPECTION ACTIVITIES RELATED TO THE QUALITY ASSURANCE PLAN REQUIRED BY THE BUILDING CODE (IBC CHAPTER 17) FOR THE FABRICATION, ERECTION AND CONSTRUCTION OF THE STRUCTURAL SYSTEMS AS GIVEN IN THE SPECIFICATIONS AND DRAWINGS OF THE PROJECT. ALL INSPECTORS WILL BE QUALIFIED BY TRAINING AND EXPERIENCE FOR THE REQUIRED INSPECTIONS AND TEST PROCEDURES. REFER TO IBC CHAPTER 17 "STRUCTURAL TESTS AND SPECIAL INSPECTIONS", FOR SPECIFIC TEST PROCEDURES.
4. THE CONTRACTOR WILL PROVIDE ACCESS FOR SPECIAL INSPECTION PERSONNEL TO PERFORM THESE SERVICES. CONTRACTOR TO COORDINATE WITH OWNER.
5. TESTING AND INSPECTION REPORTS SHALL BE PREPARED FOR EACH INSPECTION ITEM ON A DAILY BASIS WHENEVER WORK IS PERFORMED ON THAT ITEM. REPORTS SHALL BE DISTRIBUTED TO OWNER, BUILDING OFFICIAL (IF REQUESTED), AND ENGINEER FOR THEIR REVIEW, COMMENT, AND ACTION, AS NEEDED.
6. REQUIREMENTS FOR MATERIALS **TESTING** IS OUTLINED IN THE PROJECT MANUAL.

BAR LENGTH ON ORIGINAL DRAWING EQUALS ONE INCH. ADJUST SCALE ACCORDINGLY

HDR Fisheries DESIGN CENTER

REGISTERED PROFESSIONAL ENGINEER DAVID TAVANGAR C NO. 54655 EXP. 12/31/15 CIVIL STATE OF CALIFORNIA

3/18/14

NO.	DATE	REVISION	BY
A	3/17/14	ISSUED FOR BIDS	OT

SONOMA COUNTY WATER AGENCY

SCALE: AS NOTED | DATE: 3/17/14
DRAWN: JKW
REVIEWED:

Sonoma County Water Agency
Mirabel Fish Screen and Fish Ladder Replacement
SPECIAL INSPECTION NOTES

FILE NAME: 164479_s02.dwg
CONTRACT NUMBER: ####
DRAWING NUMBER: S2
SHEET 33 OF 99

C:\pwworking\sea\d0799528\164479_S02

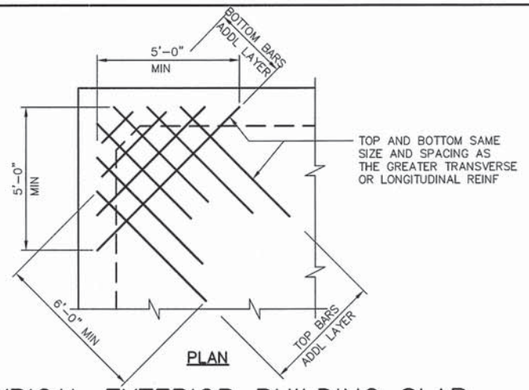

TYPICAL EXTERIOR BUILDING SLAB CORNER DETAIL (1)

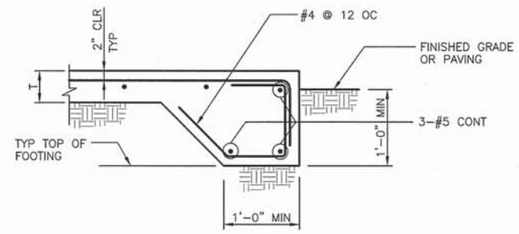

TYPICAL BUILDING SLAB EDGE (2)

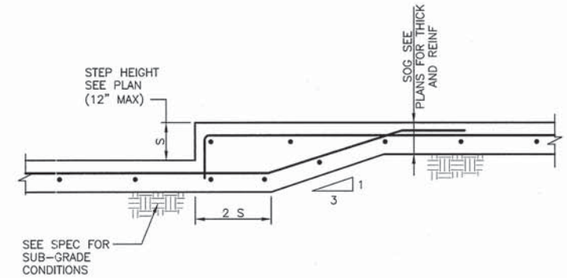

TYPICAL SLAB-ON-GRADE DEPRESSION (FOR ONE LAYER OF REBAR) (3)

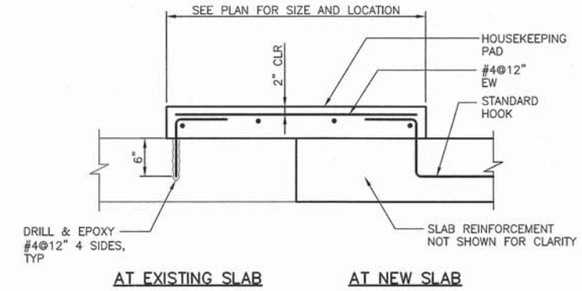

TYPICAL HOUSEKEEPING PAD DETAIL (4)

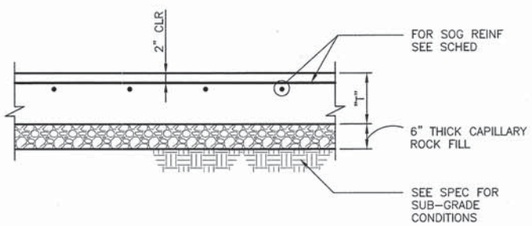

THICK "T"	REINFORCMENT
6"	#4 @ 12" EA WAY
8"	#5 @ 12" EA WAY

TYPICAL BUILDING SLAB-ON-GRADE (5)

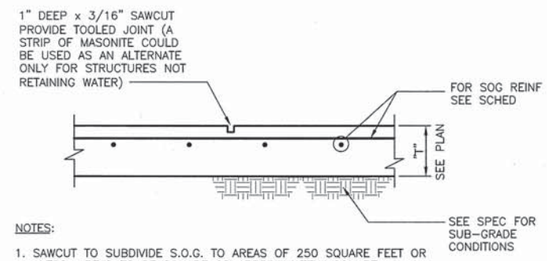

NOTES:

1. SAWCUT TO SUBDIVIDE S.O.G. TO AREAS OF 250 SQUARE FEET OR LESS. AREAS TO BE SQUARE OR APPROXIMATELY SQUARE.
2. SAWCUT AS SOON AS CONCRETE IS FIRM ENOUGH TO WALK ON BUT NO LATER THAN 24 HOURS AFTER POURING.

TYPICAL BUILDING SLAB-ON-GRADE CONTROL JOINT (6)

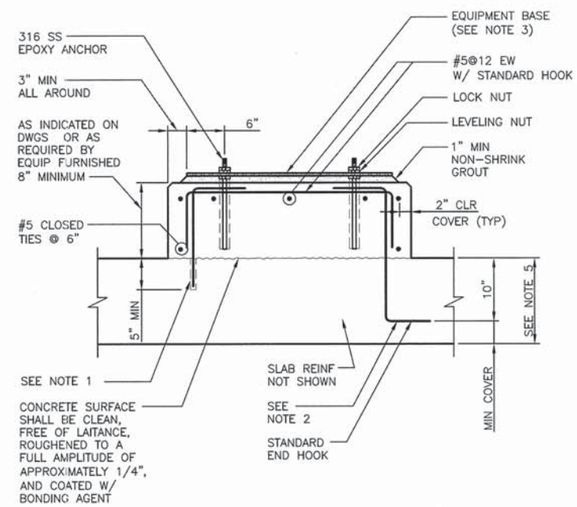

NOTES:

1. FOR NEW EQUIPMENT PADS ON EXISTING SLABS, DRILL INTO EXISTING SLAB TO AT 12" CENTERS AROUND PERIMETER OF EQUIPMENT PADS AND SET #5 HOOKED DOWELS IN EPOXY GROUT.
2. FOR EQUIPMENT PADS ON NEW SLABS, PROVIDE #5 DOWELS AT 12" CENTERS AROUND PERIMETER OF EQUIPMENT BASE.
3. EQUIPMENT DIMENSIONS SHALL BE AS INDICATED ON THE DRAWINGS OR AS DETERMINED BY THE EQUIPMENT MANUFACTURER AND APPROVED BY THE ENGINEER.
4. EQUIPMENT BASES SHALL BE INSTALLED LEVEL. TOLERANCE IS 1/16".
5. WHERE CONCRETE SLAB THICKNESS WILL NOT PROVIDE MINIMUM COVER AS SPECIFIED ON DWGS, PROVIDE EXTRA THICKNESS OF CONCRETE.
6. SIZE PADS PER PLAN WHEN SHOWN.

EQUIPMENT PAD DETAIL (9)

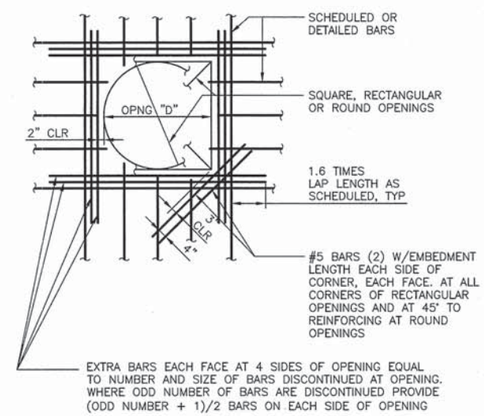

NOTES:

1. THIS DETAIL IS APPLICABLE ONLY TO WALLS OR SLABS WITH THICKNESS 36" OR LESS. FOR CONDITIONS AT THICKER CONCRETE, SEE PLANS AND DETAILS.
2. UNLESS SHOWN OTHERWISE ON DRAWINGS, PROVIDE EXTRA BARS AROUND OPENINGS IN WALLS, FLOORS, AND ROOFS AS SHOWN.
3. EVERY BAR DISCONTINUED AT AN OPENING SHALL BE REPLACED IN KIND BY ONE EXTRA BAR PLACED AT ONE SIDE OF THE OPENING AS SHOWN ABOVE.
4. FOR OPENINGS 8" OR LESS IN SLABS AND WALLS, NO EXTRA BARS ARE REQUIRED UNLESS OTHERWISE NOTED. SCHEDULED REBARS SHALL BE RESPACED (NOT CUT) TO ALLOW FOR UNIMPAIRED OPENINGS.

REINFORCING AT RECTANGULAR/CIRCULAR OPENINGS (10)

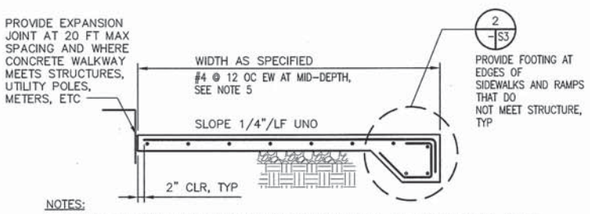

NOTES:

1. PROVIDE BROOM FINISH UNO PER THE REQUIREMENTS OF SPEC SECTION 03002.
2. PROVIDE TOOLED JOINTS AT 5 FOOT CENTERS IN PERPENDICULAR DIRECTIONS.
3. PROVIDE 6" CLASS 2AB UNDER CONCRETE SIDEWALKS AND LANDINGS, UNLESS OTHERWISE NOTED.
4. 8" THICKNESS AT CONCRETE PAVEMENT AND RAMPS.
5. LEAN CONCRETE WITH MINIMUM 28 DAY COMPRESSIVE STRENGTH F'c=3,000 PSI MAY BE USED AT CONCRETE SIDEWALKS AND LANDINGS ONLY. SEE SPECIFICATION SECTION 03002 FOR ADDITIONAL INFORMATION.

CONCRETE SIDEWALK AND RAMP DETAIL (7)

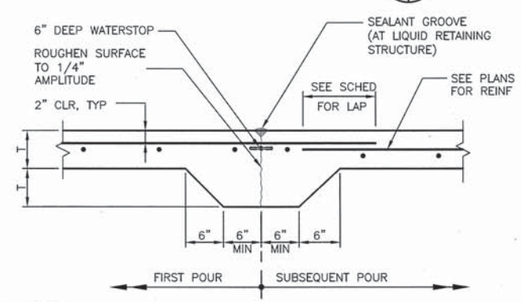

NOTE:

CONTRACTOR TO SUBMIT PROPOSED CONSTRUCTION JOINT LAYOUT (IF DIFFERENT FROM SHOWN ON FLOOR PLAN), FOR REVIEW AND APPROVAL BY ENGINEER OF RECORD PRIOR TO PLACING CONCRETE.

TYPICAL CONCRETE SLAB-ON-GRADE CONSTRUCTION JOINT DETAIL (8)

BAR LENGTH ON ORIGINAL DRAWING EQUALS ONE INCH. ADJUST SCALE ACCORDINGLY

HDR Fisheries DESIGN CENTER

REGISTERED PROFESSIONAL ENGINEER — DAVID TAVANGAR — NO. 54655 EXP. 12/31/15 — CIVIL — STATE OF CALIFORNIA — 3/18/14

NO.	DATE	REVISION	BY
A	3/17/14	ISSUED FOR BIDS	OT

SONOMA COUNTY WATER AGENCY

SCALE: AS NOTED | DATE: 3/17/14
DRAWN: JKW
REVIEWED: Kent Gylle

Sonoma County Water Agency
Mirabel Fish Screen and Fish Ladder Replacement
TYPICAL CONCRETE DETAILS 1

FILE NAME: 164479_s03.dwg
CONTRACT NUMBER: ####
DRAWING NUMBER: S3
SHEET 34 OF 99

C:\pwworking\sea\d0799528\164479_S03

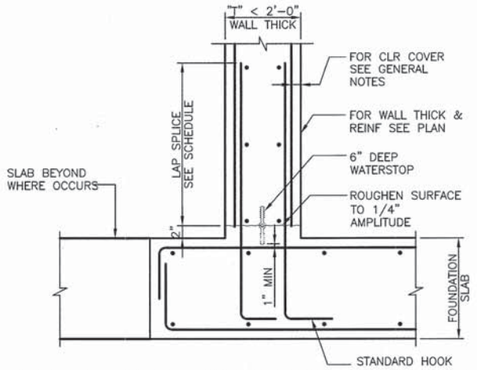

TYPICAL WALL HORIZONTAL CONSTRUCTION JOINT WITHOUT SHEAR KEY (1)

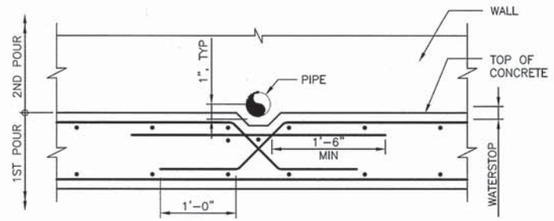

NOTES:

1. WALL REINFORCEMENT NOT SHOWN FOR CLARITY.
2. FOR ALL REINFORCEMENT SEE PLANS.

TYPICAL WALL HORIZ CONST JOINT AT PIPE INTERFERENCE (2)

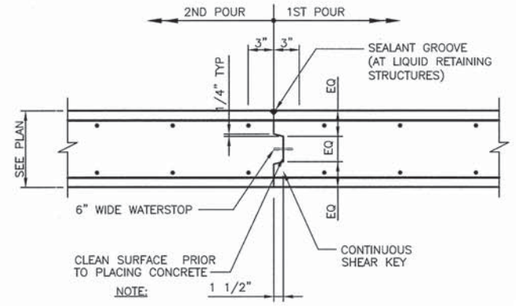

NOTE:

CONTRACTOR TO SUBMIT PROPOSED CONSTRUCTION JOINT LAYOUT (IF DIFFERENT FROM SHOWN ON FLOOR PLAN), FOR REVIEW AND APPROVAL OF THE ENGINEER OF RECORD PRIOR TO PLACING CONCRETE.

TYPICAL WALL VERTICAL CONSTRUCTION JOINT (3)

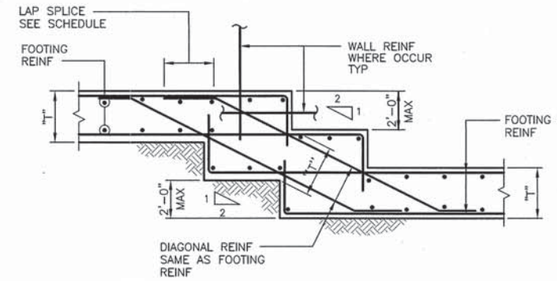

NOTES:

1. FOR FOOTING REINFORCEMENT AND FOOTING SIZE, SEE FOUNDATION PLAN, SECTIONS AND SCHEDULE.
2. "T" DENOTES FOOTING THICKNESS.

TYPICAL STEPPED FOOTING DETAIL (4)

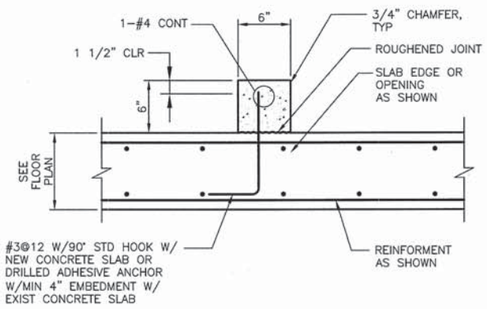

CONCRETE CURB (5)

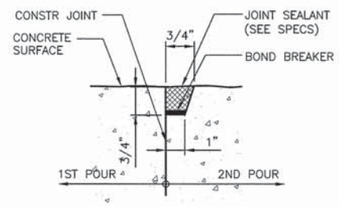

1. DO NOT APPLY BOND BREAKER TO SEALANT GROOVE. BOND BREAKER SHALL BE APPLIED NEATLY TO THE BOTTOM OF GROOVE ONLY.
2. BOND BREAKER TAPE SHALL NOT BE USED EXCEPT FOR SLIP DOWEL JOINTS.
3. ALL JOINTS OF HYDRAULIC STRUCTURES RETAINING WATER SHALL HAVE A SEALANT GROOVE.

TYPICAL SEALANT GROOVE DETAIL (6)

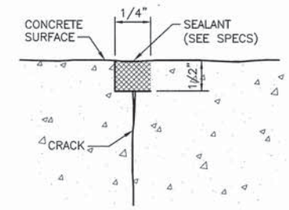

NOTES:

1. ENLARGE CRACK AT CONCRETE SURFACE AS SHOWN AND APPLY JOINT SEALANT.
2. ALL CRACKS IN WATER RETAINING STRUCTURE MUST BE REPAIRED PRIOR TO FILLING.
3. WIDEN CRACK SHALL BE 1/8" MINIMUM EACH SIDE OF THE CRACK CENTERLINE.

CONCRETE CRACK REPAIR DETAIL (7)

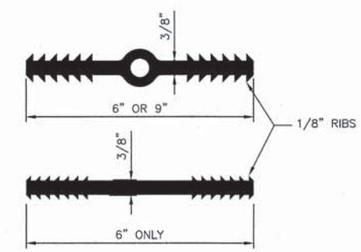

NOTES:

1. – USE 9" AT EXPANSION JOINTS ONLY.
   – USE 6" BULB AT CONSTRUCTION JOINTS.
   – USE 6" NON-BULB AT CONSTRUCTION JOINTS. (WITH REINFORCING CONTINUOUS THRU JOINT)
2. WATERSTOP TO BE PVC UNLESS NOTED OTHERWISE.

WATERSTOP DETAIL (8)

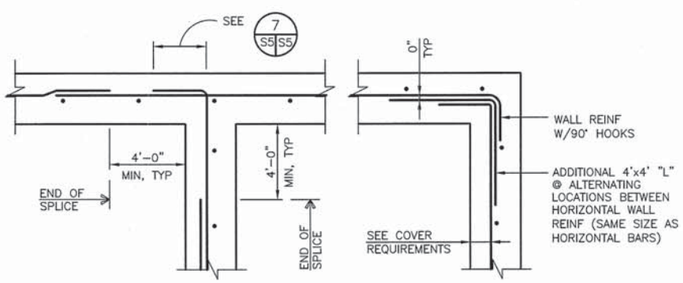

SINGLE-LAYER INTERSECTION

SINGLE-LAYER CORNER

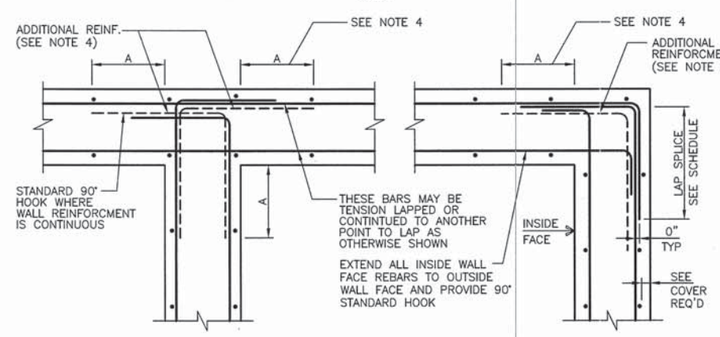

DOUBLE-LAYER INTERSECTION

DOUBLE-LAYER CORNER

NOTES:

1. SEE INDIVIDUAL STRUCTURE SHEETS FOR EXTRA HORIZONTAL REBARS AT CORNERS AND WALL INTERSECTIONS.
2. SEE SCHEDULE FOR BAR DEVELOPMENT AND LAP LENGTHS.
3. LONG STRAIGHT BARS WITH LAP SPLICES BENT BARS AT ENDS MAY BE SUBSTITUTED FOR LONG BARS WITH END HOOKS.
4. ADDITIONAL CORNER BARS REQUIRED ONLY AS SPECIFIED ON DESIGN DRAWINGS, AND TO BE STAGGERED. FULL WALL HEIGHT, WITH HORIZONTAL WALL REINFORCING. A=1/5 THE CLEAR SPAN DISTANCE MEASURED HORIZONTALLY BETWEEN WALLS, BUT IN NO CASE LESS THAN THE REQUIRED LENGTH OF LAPPED SPLICES FOR TOP BARS (UNLESS AT A PENETRATION).

HORIZONTAL REINFORCING AT WALL CORNER (9)

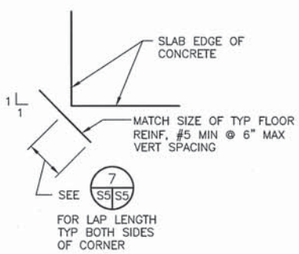

ADDITIONAL REINFORCEMENT AT RE-ENTRANT SLAB CORNER (10)

BAR LENGTH ON ORIGINAL DRAWING EQUALS ONE INCH. ADJUST SCALE ACCORDINGLY

HDR Fisheries DESIGN CENTER

REGISTERED PROFESSIONAL ENGINEER — JAMES TAVANDER — NO. 54655 — EXP. 12/31/15 — CIVIL — STATE OF CALIFORNIA — 3/18/14

NO.	DATE	REVISION	BY
A	3/17/14	ISSUED FOR BIDS	OT

SONOMA COUNTY WATER AGENCY

SCALE: AS NOTED | DATE: 3/17/14
DRAWN: JKW
REVIEWED:

Sonoma County Water Agency
Mirabel Fish Screen and Fish Ladder Replacement
TYPICAL CONCRETE DETAILS 2

FILE NAME: 164479_s04.dwg
CONTRACT NUMBER: ####
DRAWING NUMBER: S4
SHEET 35 OF 99

C:\pwworking\oeo\d0789528\164479_S04

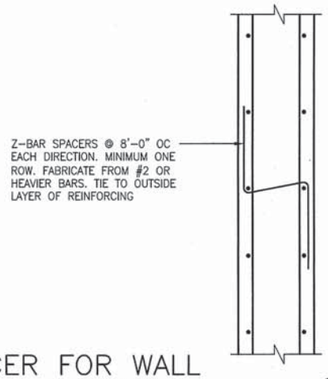

SPACER FOR WALL REINFORCEMENT

1

LOCATION	* MINIMUM COVER
UNFORMED SURFACES ADJACENT TO EARTH	3"
FORMED OR TOP SURFACES EXPOSED TO WEATHER OR SATURATED AIR, SUBMERGED OR IN CONTACT WITH EARTH:	2"
OTHER LOCATIONS:	
BARS IN BEAMS OR GIRDERS, INCLUDING STIRRUPS AND COLUMN SPIRALS OR TIES	1 1/2"
SLABS, WALLS AND JOINTS	
#9 AND LARGER	BAR DIA + 1/4"
#8 AND SMALLER	1 1/2"

* COVER FOR REINFORCING STEEL SHALL NOT BE LESS THAN THE MINIMUM GIVEN ABOVE (NO MINUS TOLERANCE) , AND SHALL NOT EXCEED THE MINIMUM BY MORE THAN 1/4 INCH WHERE THE CONCRETE THICKNESS IS 24" OR LESS, OR MORE THAN 1/2 INCH WHERE THE CONCRETE THICKNESS IS MORE THAN 24 INCHES.

REINFORCEMENT CONCRETE COVER

2

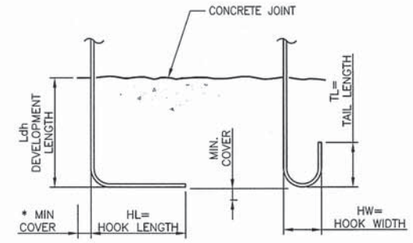

90° STD HOOK 180° STD HOOK

BAR SIZE GRADE 60	f'c=4000 psi				f'c=5000 psi
	Ldh *	HL	HW	TL	Ldh *
#3	6"	6"	3"	3"	6"
#4	7"	8"	4"	4 1/2"	6"
#5	9"	10"	5"	5"	8"
#6	10"	1'-0"	6"	6"	9"
#7	1'-0"	1'-2"	7"	7"	11"
#8	1'-2"	1'-4"	8"	8"	1'-0"
#9	1'-3"	1'-7"	11 3/4"	10 1/2"	1'-2"
#10	1'-5"	1'-10"	1'-1 1/4"	11 1/2"	1'-3"
#11	1'-7"	2'-0"	1'-2 3/4"	1'-1"	1'-5"

* COMPLYING WITH MINIMUM COVER REQUIREMENTS OF ACI 318, 12.5.3.2. OTHERWISE Ldh MUST BE RE-CALCULATED.

REINFORCING HOOK SCHEDULE

3

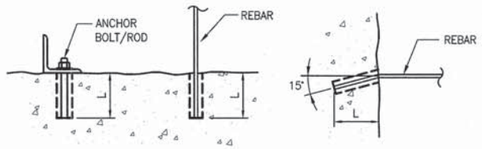

VERTICAL APPLICATION HORIZONTAL APPLICATION

ADHESIVE ANCHOR SCHEDULE			
REINFORCING BARS		ANCHOR BOLTS/RODS	
BAR SIZE	EMBED LENGTH (L)	DIA (IN)	EMBED LENGTH (L)
#3	4"	3/8"	5"
#4	5"	1/2"	6"
#5	6"	5/8"	7"
#6	7"	3/4"	8"
#7	8"	7/8"	9"
#8	9"	1"	10"
#9	10"		
#10	12"		

NOTES:
1. EPOXY TYPE IS SUBJECT TO APPROVAL OF THE ENGINEER OF RECORD.
2. EMBEDMENT LENGTHS SHOWN ARE MINIMUM. PROVIDE MANUFACTURER'S RECOMMENDATIONS FOR INSTALLATION.

ADHESIVE ANCHOR DETAILS AND SCHEDULE

4

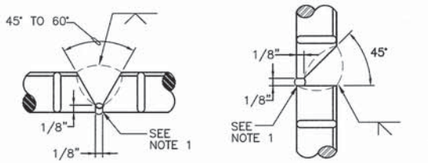

HORIZONTAL POSITION – A VERTICAL POSITION – B

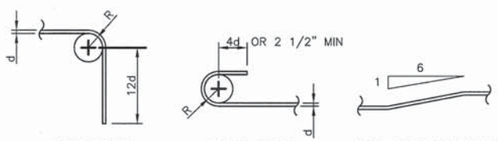

90° BEND 180° BEND MAX OFFSET BEND

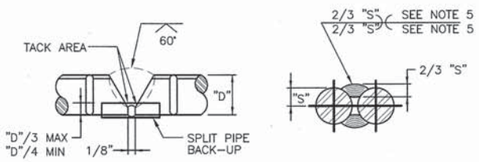

HORIZONTAL AND VERTICAL POSITION – C HORIZONTAL AND VERTICAL POSITION – D

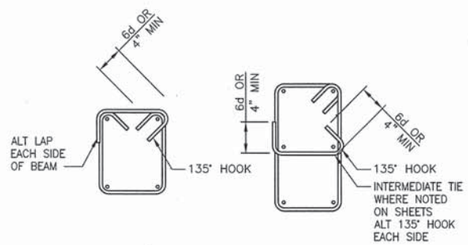

TYP. STIRRUP TYP. COLUMN TIE OR CLOSED STIRRUP

NOTES:

1. CHIP, GRIND, OR GOUGE TO SOUND METAL BEFORE WELDING OTHER SIDE.
2. USE DETAIL A & B FOR #9 & LARGER BARS. USE DETAIL C FOR #8 & SMALLER BARS. USE DETAIL D FOR #6 & SMALLER BARS.
3. E 90 ELECTRODE FOR GRADE 60.
4. SEE AWS D1.4 FOR WELDING PROCESS, PREHEAT REQUIREMENTS, AND OTHER DETAILS. SUBMIT WELDING PROCEDURE PER AWS.
5. 1 1/2" FOR #3 AND #4 BARS; 2" FOR #5 BARS; AND 2 1/2" FOR #6 BARS.

WELDED SPLICE OF REINFORCING BARS

5

BAR SIZE	R
#3 TIES & STIRRUPS	2d
#3–#8	3d
#9–#11	4d
#14–#18	5d

TYPICAL STIRRUPS AND TIES

6

BAR SIZE	f'c = 5.0 ksi		fy = 60.0 ksi	
	LAP LENGTH (IN)		EMBEDMENT LENGTH (IN)	
	TOP	OTHER	TOP	OTHER
#3	21	16	16	12
#4	28	22	22	16
#5	35	27	27	21
#6	43	33	33	25
#7	62	48	48	37
#8	71	55	55	42
#9	80	62	62	47
#10	91	70	70	53
#11	101	77	77	59

BAR SIZE	f'c = 4.0 ksi		fy = 60.0 ksi	
	LAP LENGTH (IN)		EMBEDMENT LENGTH (IN)	
	TOP	OTHER	TOP	OTHER
#3	24	18	18	15
#4	33	24	24	19
#5	40	31	31	24
#6	48	38	37	29
#7	70	55	54	42
#8	81	62	62	48
#9	91	70	70	54
#10	103	79	79	61
#11	113	87	87	67

NOTES:

1. LAP LENGTHS SHOWN ARE FOR CLASS "B" TENSION SPLICES.
2. LAP LENGTHS AND EMBEDMENTS SHOWN ARE FOR BARS SPACED LATERALLY @ > FIVE TIMES THE BAR DIAMETER AND FOR MINIMUM COVER IN ACCORDANCE WITH ACI 318-95.
3. IF SPACING IS < 5 TIMES BAR DIAMETER, INCREASE LAP LENGTH AND EMBEDMENT SHOWN BY 25%.
4. TOP REINFORCING IS HORIZONTAL STEEL SO PLACED THAT MORE THAN 12" OF FRESH CONCRETE IS CAST IN THE MEMBER BELOW THE REINFORCING.

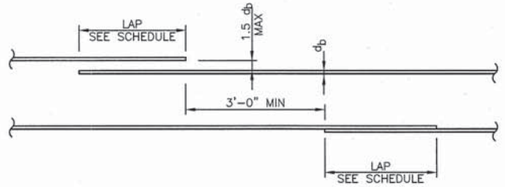

REINFORCING LAP SCHEDULE

7

BAR LENGTH ON ORIGINAL DRAWING EQUALS ONE INCH. ADJUST SCALE ACCORDINGLY

HDR Fisheries DESIGN CENTER

REGISTERED PROFESSIONAL ENGINEER DAVID TAVANGAR NO. 54655 EXP. 12/31/15 CIVIL STATE OF CALIFORNIA 3/18/14

NO.	DATE	REVISION	BY
A	3/17/14	ISSUED FOR BIDS	OT

SONOMA COUNTY WATER AGENCY

SCALE: AS NOTED DATE: 3/17/14
DRAWN: JKW
REVIEWED:

Sonoma County Water Agency
Mirabel Fish Screen and Fish Ladder Replacement
TYPICAL REINFORCING DETAILS

FILE NAME: 164479_s05.dwg
CONTRACT NUMBER: ####
DRAWING NUMBER: S5
SHEET 36 OF 99

C:\pwworking\sec\d0799528\164479_S05

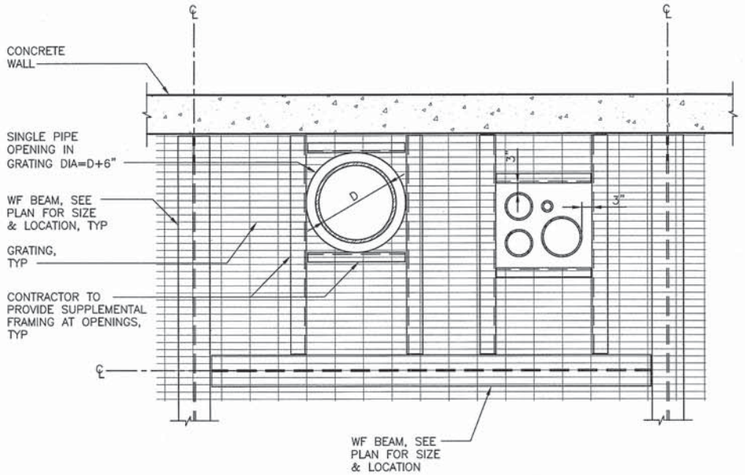

NOTES:
1. CONTRACTOR TO COORDINATE LOCATION OF PIPES & DUCT WORK WITH PROCESS AND MECHANICAL DRAWINGS.
2. CONTRACTOR TO PROVIDE SUPPLEMENTAL STEEL FRAMING AT OPENINGS, TYPICAL.

TYPICAL DETAIL AT GRATING PENETRATION

1 / -|-

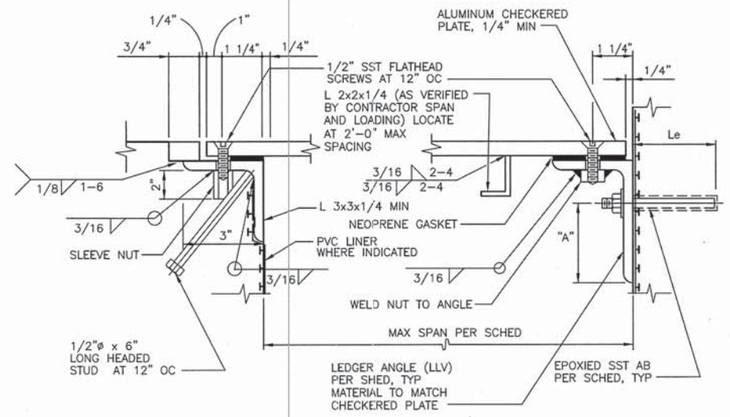

NOTES:
1. ALL METAL ITEMS ARE 6061-T6 ALUMINUM UNLESS NOTED OTHERWISE IN DESIGN DRAWINGS.
2. PVC LINER SHOWN FOR CONSTRUCTION WHERE APPLICABLE.

ALUMINUM CHECKERED PLATE COVER SCHEDULE

DESIGN LOADING PSF	MAX SPAN (FT)	LEDGER ANGLE SIZE	BOLT DIAMETER (IN)	BOLT SPACING (IN)	EMBED LENGTH, Le (IN)	"A" (INCH)
100	2'-0"	L3x2x1/4	1/2	24	5	1.25
	3'-0"	L3x2x1/4	1/2	24	5	1.25
	4'-0"	L3x2x1/4	1/2	24	5	1.25
	5'-0"	L3x2x1/4	5/8	24	6	1.25
150	2'-0"	L3 1/2x3x1/4	1/2	24	5	1.75
	3'-0"	L3 1/2x3x1/4	1/2	24	5	1.75
	4'-0"	L3 1/2x3x1/4	5/8	24	6	1.75
	5'-0"	L3 1/2x3x1/4	3/4	24	6	1.75
200	2'-0"	L4x3x1/4	5/8	24	6	2.00
	3'-0"	L4x3x1/4	5/8	24	6	2.00
	4'-0"	L4x3x1/4	5/8	24	6	2.00
	5'-0"	L4x3x5/16	3/4	24	6	2.00
250	2'-0"	L5x3x5/16	5/8	24	6	2.50
	3'-0"	L5x3x5/16	5/8	24	6	2.50
	4'-0"	L5x3x5/16	3/4	24	6	2.50
	5'-0"	L5x3x5/16	3/4	24	6	2.50

TYPICAL ALUMINUM CHECKERED PLATE COVERED OPENING DETAIL

2 / -|-

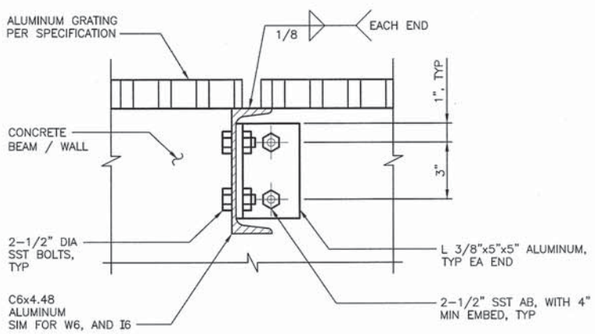

GRATE SUPPORT

3 / -|-

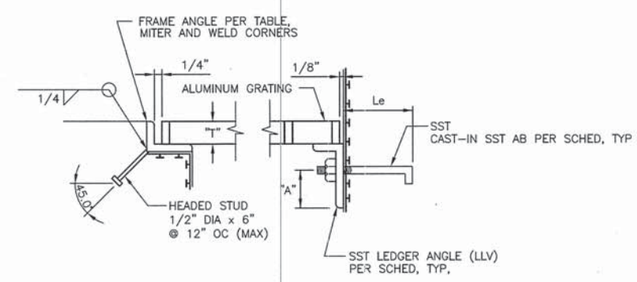

NOTES:
1. GRATING DEPTH TO BE DETERMINED BY MANUFACTURER AND APPROVED BY ENGINEER (UNO).
2. ALL ENDS AND OPENINGS SHALL BE BANDED.
3. ALL GRATING SHALL BE SECURED IN PLACE WITH REMOVABLE FASTENERS, SEE GRATING ANCHOR DETAIL.
4. WEIGHT OF GRATING SECTIONS SHALL NOT EXCEED 80 LBS EACH.
5. BEARING BARS SHALL BE DEPTH T x 3/16" @ 1 3/16" OC, MINIMUM, AND CROSS BARS SHALL BE @ 4" OC.
6. ALL GRATING SHALL BE 6061-T6 ALUMINUM UNLESS NOTED OTHERWISE.
7. PVC LINER SHOWN FOR CONSTRUCTION WHERE APPLICABLE.
8. ALL ALUMINUM IN CONTACT WITH CONCRETE SHALL BE COATED WITH ZINC CHROMATE PRIMER BEFORE EMBEDDING IN CONC.

FRAME ANGLE TABLE

GRATING DEPTH "T"	FRAME ANGLE SIZE MIN
1"	1 3/4x1 1/4x1/4
1 1/4"	2x1 1/2x1/4
1 1/2"	1 3/4x1 3/4x1/4
1 3/4"	2x2x1/4
2"	2 1/2x2 1/2x1/2
2 1/4"	2 1/2x2 1/2x1/2
2 1/2"	3x2 1/2x1/2

ALUMINUM GRATING SUPPORT SCHEDULE

DESIGN LOADING PSF	MAX SPAN	LEDGER ANGLE	BOLT DIAMETER	BOLT SPACING	EMBEDED LENGTH Le	"A" (INCH)
100	2'-0"	L3x2x1/4	1/2 "	24	6	1.25
	3'-0"	L3x2x1/4	1/2 "	24	6	1.25
	4'-0"	L3x2x1/4	1/2 "	24	6	1.25
	5'-0"	L3x2x5/16	1/2 "	24	6	1.25
150	2'-0"	L3 1/2x3x1/4	1/2 "	24	6	1.75
	3'-0"	L3 1/2x3x1/4	1/2 "	24	6	1.75
	4'-0"	L3 1/2x3x5/16	1/2 "	24	6	1.75
	5'-0"	L3 1/2x3x5/16	5/8 "	24	6	1.75
200	2'-0"	L4x3x1/4	1/2 "	24	6	2.00
	3'-0"	L4x3x1/4	1/2 "	24	6	2.00
	4'-0"	L4x3x5/16	5/8 "	24	6	2.00
	5'-0"	L4x3x3/8	3/4 "	24	6	2.00
250	2'-0"	L5x3x5/16	1/2 "	24	6	2.50
	3'-0"	L5x3x5/16	5/8 "	24	6	2.50
	4'-0"	L5x3x5/16	5/8 "	24	6	2.50
	5'-0"	L5x3x5/16	3/4 "	24	6	2.50

ALUMINUM GRATING SUPPORT DETAIL

4 / S6 S12

BAR LENGTH ON ORIGINAL DRAWING EQUALS ONE INCH. ADJUST SCALE ACCORDINGLY

HDR Fisheries DESIGN CENTER

REGISTERED PROFESSIONAL ENGINEER — LEONARD TAKAHASHI — NO. 54655 — EXP. 12/31/15 — CIVIL — STATE OF CALIFORNIA — 3/18/14

NO.	DATE	REVISION	BY
A	3/17/14	ISSUED FOR BIDS	OT

SONOMA COUNTY WATER AGENCY

SCALE: AS NOTED | DATE: 3/17/14
DRAWN: JKW
REVIEWED:

Sonoma County Water Agency
Mirabel Fish Screen and Fish Ladder Replacement
TYPICAL GRATING DETAILS

FILE NAME: 164479_s06.dwg
CONTRACT NUMBER: ####
DRAWING NUMBER: S6
SHEET 37 OF 99

C:\pwworking\sea\d0799528\164479_S06

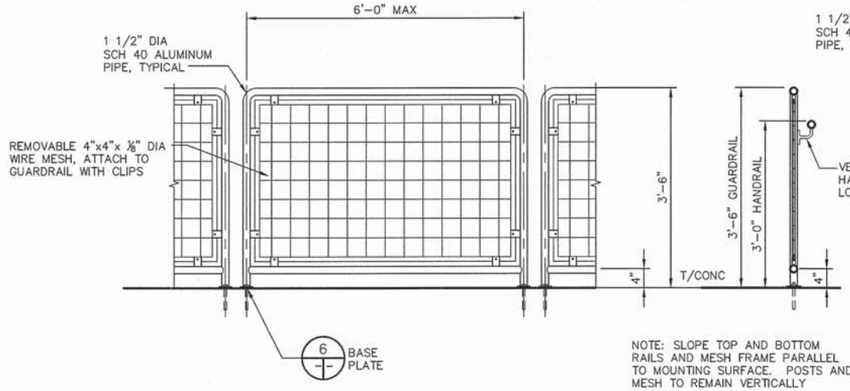

NOTE: SLOPE TOP AND BOTTOM RAILS AND MESH FRAME PARALLEL TO MOUNTING SURFACE. POSTS AND MESH TO REMAIN VERTICALLY ALIGNED.

TYPE 1 GUARDRAIL (1)

0 1 2 4 FT

SCALE: 3/4"=1'-0"

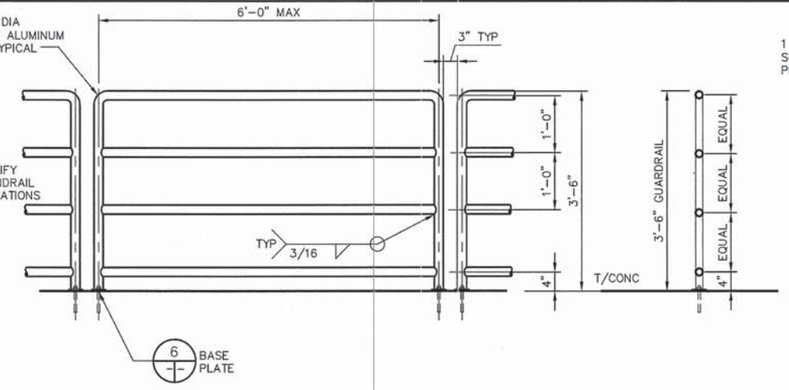

TYPE 2 GUARDRAIL (2)

0 1 2 4 FT

SCALE: 3/4"=1'-0"

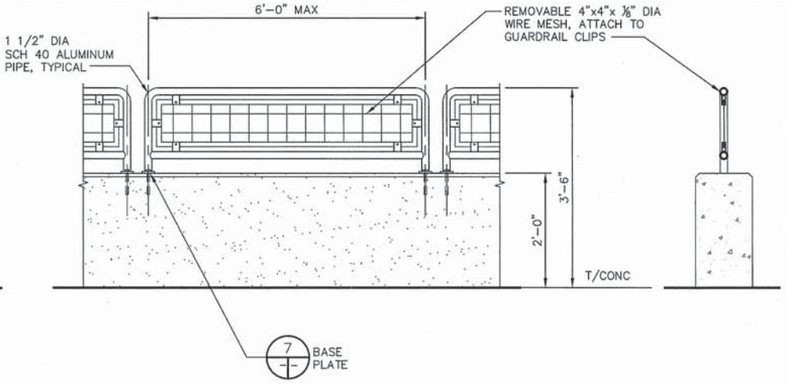

TYPE 3 GUARDRAIL (3)

0 1 2 4 FT

SCALE: 3/4"=1'-0"

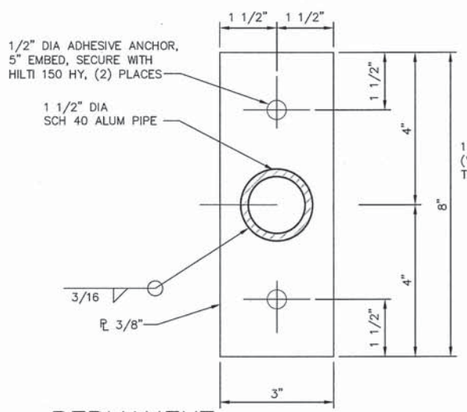

PERMANENT GUARDRAIL BASE PLATE (6)

0 1/2 FT

SCALE: 6"=1'-0"

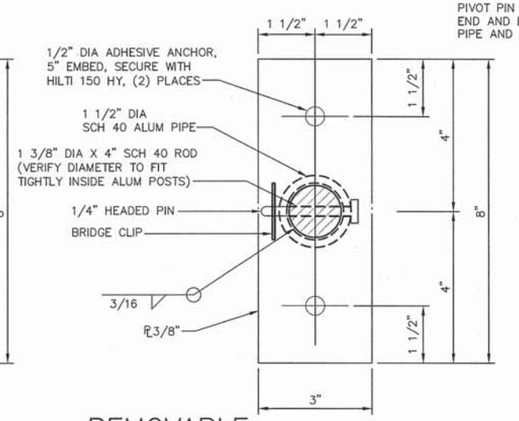

REMOVABLE GUARDRAIL BASE PLATE (7)

0 1/2 FT

SCALE: 6"=1'-0"

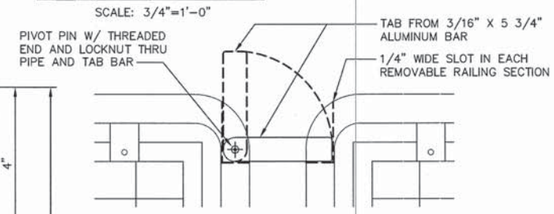

ALIGNMENT TAB (9)

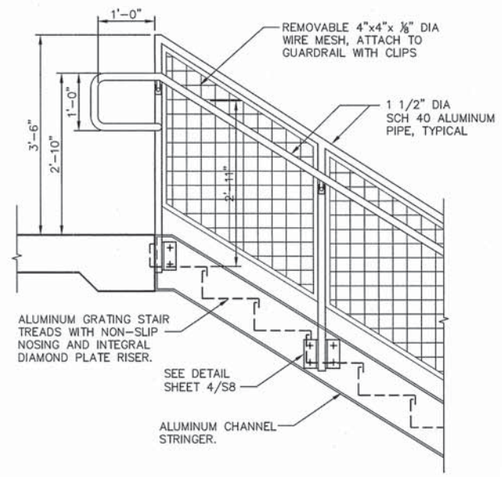

TYPE 4 GUARDRAIL & HANDRAIL (4)

0 1 2 4 FT

SCALE: 3/4"=1'-0"

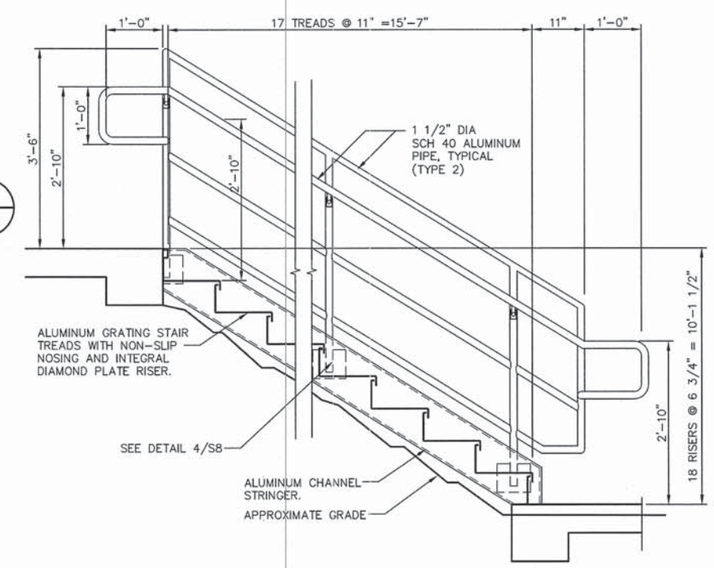

REPLACEMENT STAIR (5)

0 1 2 4 FT

SCALE: 3/4"=1'-0"

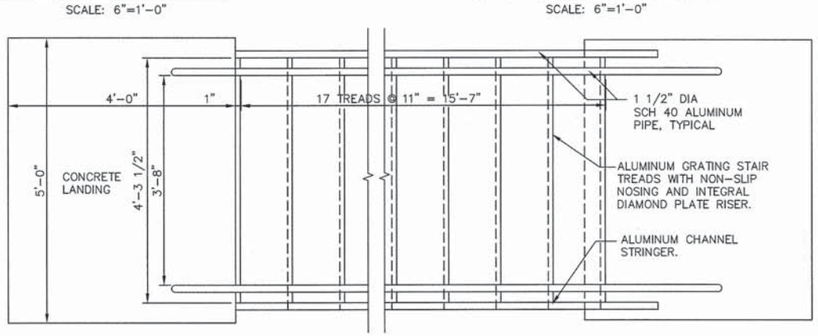

REPLACEMENT STAIR PLAN (8)

0 1 2 4 FT

SCALE: 3/4"=1'-0"

BAR LENGTH ON ORIGINAL DRAWING EQUALS ONE INCH. ADJUST SCALE ACCORDINGLY

HDR Fisheries DESIGN CENTER

REGISTERED PROFESSIONAL ENGINEER
AMID TAVANGAR
NO. 54655
EXP. 12/31/15
CIVIL
STATE OF CALIFORNIA
3/18/14

NO.	DATE	REVISION	BY
A	3/17/14	ISSUED FOR BIDS	OT

SONOMA COUNTY WATER AGENCY

SCALE: AS NOTED
DATE: 3/17/14
DRAWN: JKW
REVIEWED:

Sonoma County Water Agency
Mirabel Fish Screen and Fish Ladder Replacement
TYPICAL STAIR AND RAILING DETAILS 1

FILE NAME: 164479_s07.dwg
CONTRACT NUMBER: ####
DRAWING NUMBER: S7
SHEET 38 OF 99

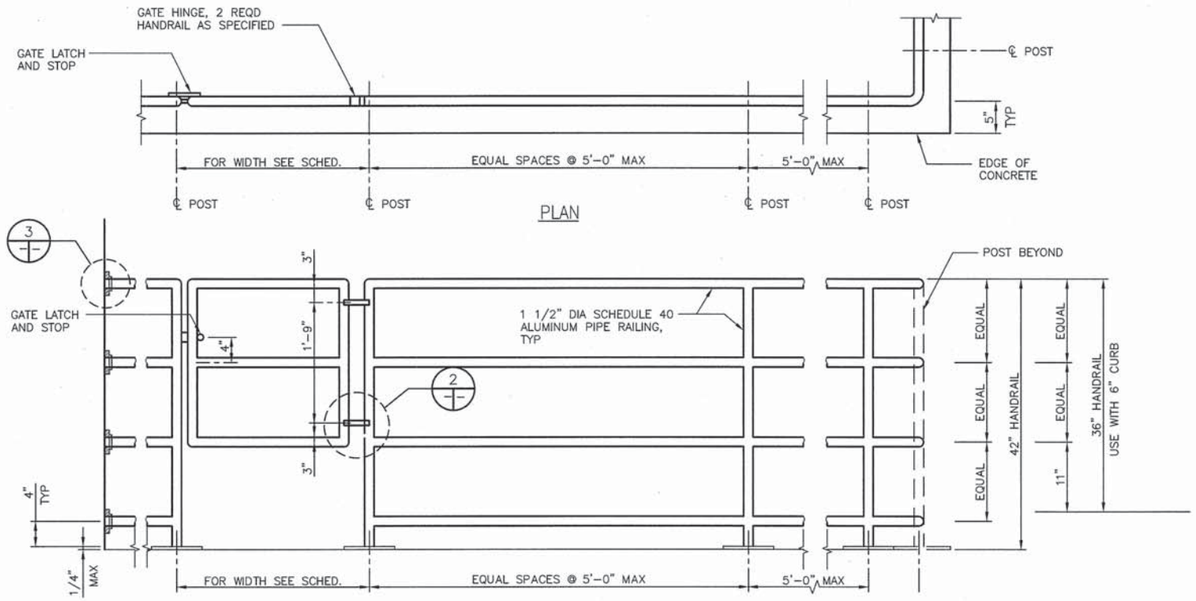

ELEVATION

NOTES:

1. FASTEN RAIL TO WALL BRACKET PER MANUFACTURERS RECOMMENDATIONS.
2. WALL FLANGE TO BE MOUNTED TO WALL WITH 2-3/8" DIA SST x 4" EMBED HILTI HIT HY-150 EPOXY ANCHOR (ICB, ER5193) OR EQUAL SPECIAL INSP REQ'D.

TYPE 4 GUARDRAIL WITH GATES 3, 4, AND 5 (1)

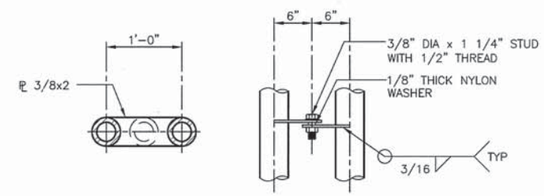

PLAN ELEVATION

GATE HINGE DETAIL (2)

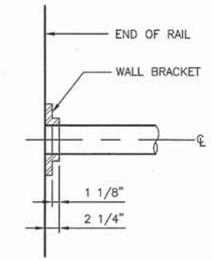

DETAIL (3)

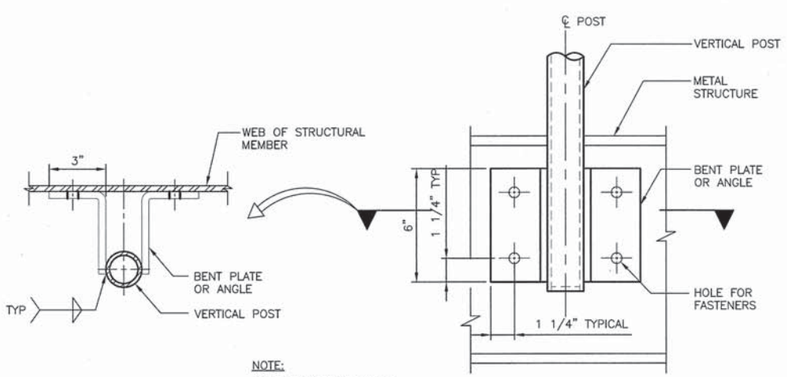

NOTE:
TOE BOARD NOT SHOWN.

PLAN VIEW FRONT VIEW

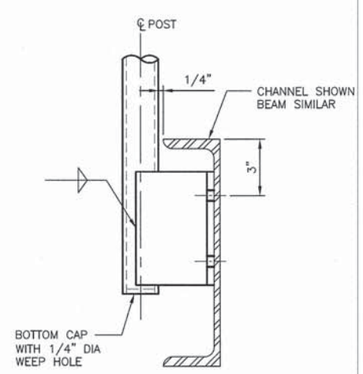

SIDE VIEW

HANDRAIL POST ANCHORAGE DETAIL @ METAL (4)

NOTES:

1. VERTICAL POST SHALL BE 1 1/2" NOMINAL DIAMETER SCHEDULE 40 ALUMINUM PIPE.
2. FASTENERS SHALL BE 1/2" DIAMETER STAINLESS STEEL ADHESIVE ANCHORS WITH 4" MININUM EMBEDMENT. PROVIDE STAINLESS STEEL NUTS AND WASHER.

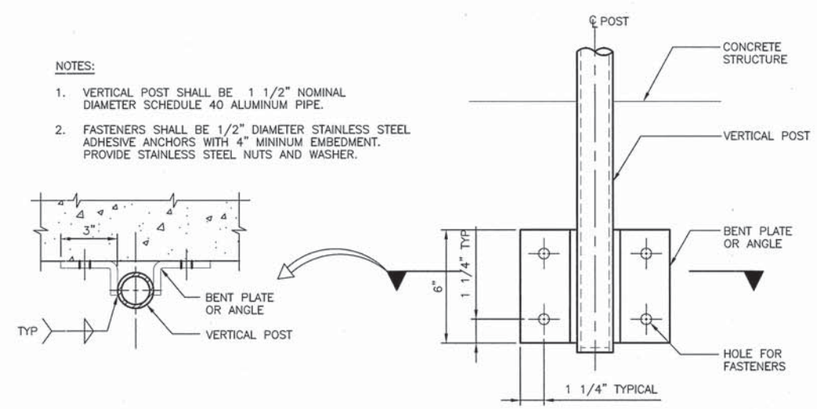

PLAN VIEW FRONT VIEW

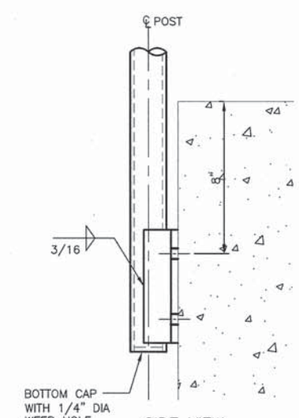

SIDE VIEW

HANDRAIL POST ANCHORAGE DETAIL @ CONCRETE (5)

BAR LENGTH ON ORIGINAL DRAWING EQUALS ONE INCH. ADJUST SCALE ACCORDINGLY

HDR Fisheries DESIGN CENTER

REGISTERED PROFESSIONAL ENGINEER DAVID P. MAVANGAL NO. 54655 EXP. 12/31/15 CIVIL STATE OF CALIFORNIA 3/18/14

NO.	DATE	REVISION	BY
A	3/17/14	ISSUED FOR BIDS	OT

SONOMA COUNTY WATER AGENCY

SCALE: AS NOTED DATE: 3/17/14
DRAWN: JKW
REVIEWED:

Sonoma County Water Agency
Mirabel Fish Screen and Fish Ladder Replacement
TYPICAL STAIR AND RAILING DETAILS 2

FILE NAME: 164479_s08.dwg
CONTRACT NUMBER: ####
DRAWING NUMBER: S8
SHEET 39 OF 99

C:\pwworking\sea\d0799528\164479_S08

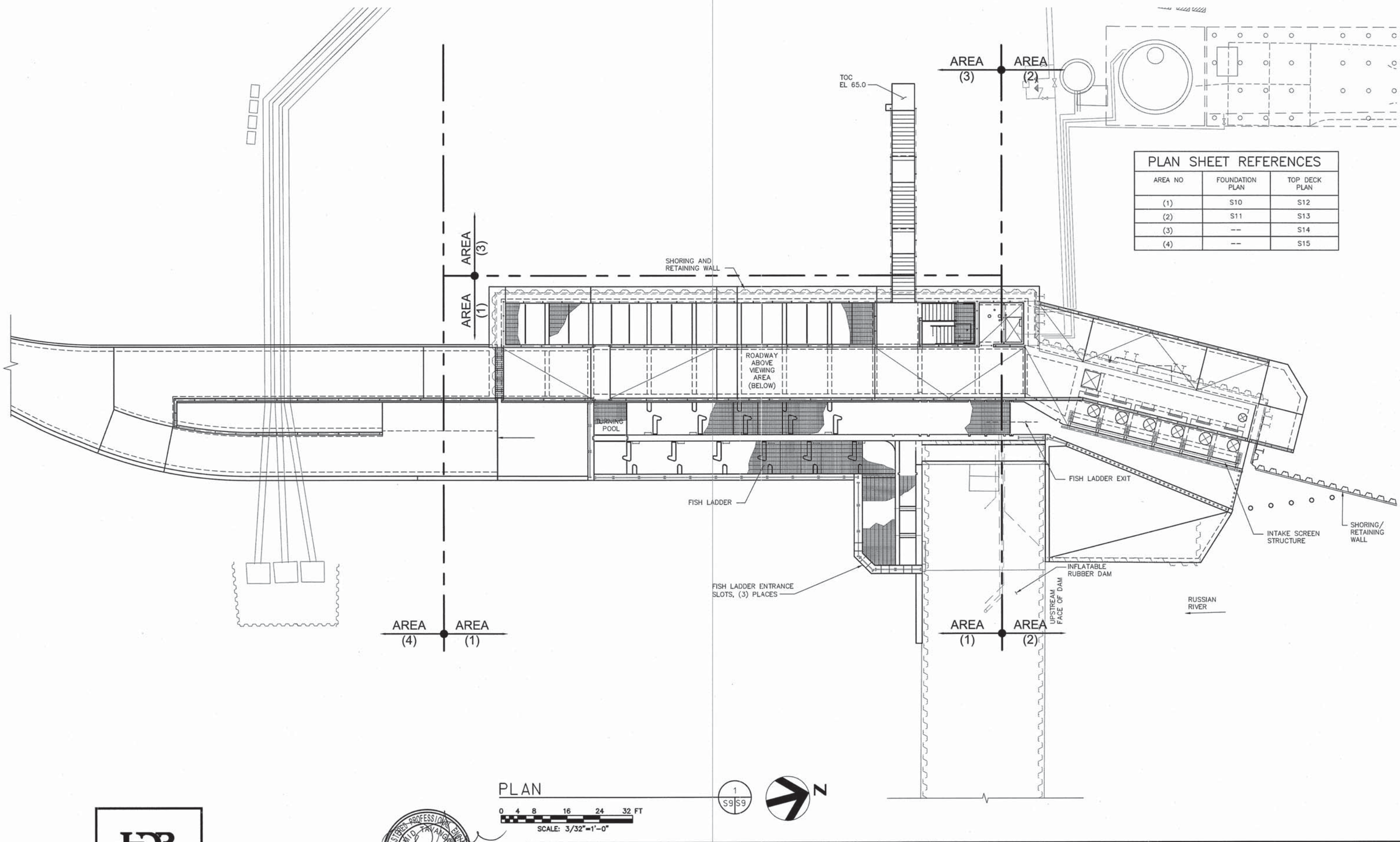

PLAN SHEET REFERENCES		
AREA NO	FOUNDATION PLAN	TOP DECK PLAN
(1)	S10	S12
(2)	S11	S13
(3)	--	S14
(4)	--	S15

PLAN 1 S9 S9

0 4 8 16 24 32 FT
SCALE: 3/32"=1'-0"

BAR LENGTH ON ORIGINAL DRAWING EQUALS ONE INCH. ADJUST SCALE ACCORDINGLY

HDR Fisheries DESIGN CENTER

REGISTERED PROFESSIONAL ENGINEER DAVID TAVANGAR No. 54655 EXP. 12/31/15 CIVIL STATE OF CALIFORNIA 3/18/14

NO.	DATE	REVISION	BY
A	3/17/14	ISSUED FOR BIDS	OT

SONOMA COUNTY WATER AGENCY

SCALE: AS NOTED
DATE: 3/17/14
DRAWN: JKW
REVIEWED:

Sonoma County Water Agency

Mirabel Fish Screen and Fish Ladder Replacement
FISH SCREEN AND FISH LADDER KEY PLAN

FILE NAME: 164479_s09.dwg
CONTRACT NUMBER: ####
DRAWING NUMBER: S9
SHEET 40 OF 99

C:\pwworking\sec\d0799528\164479_S09

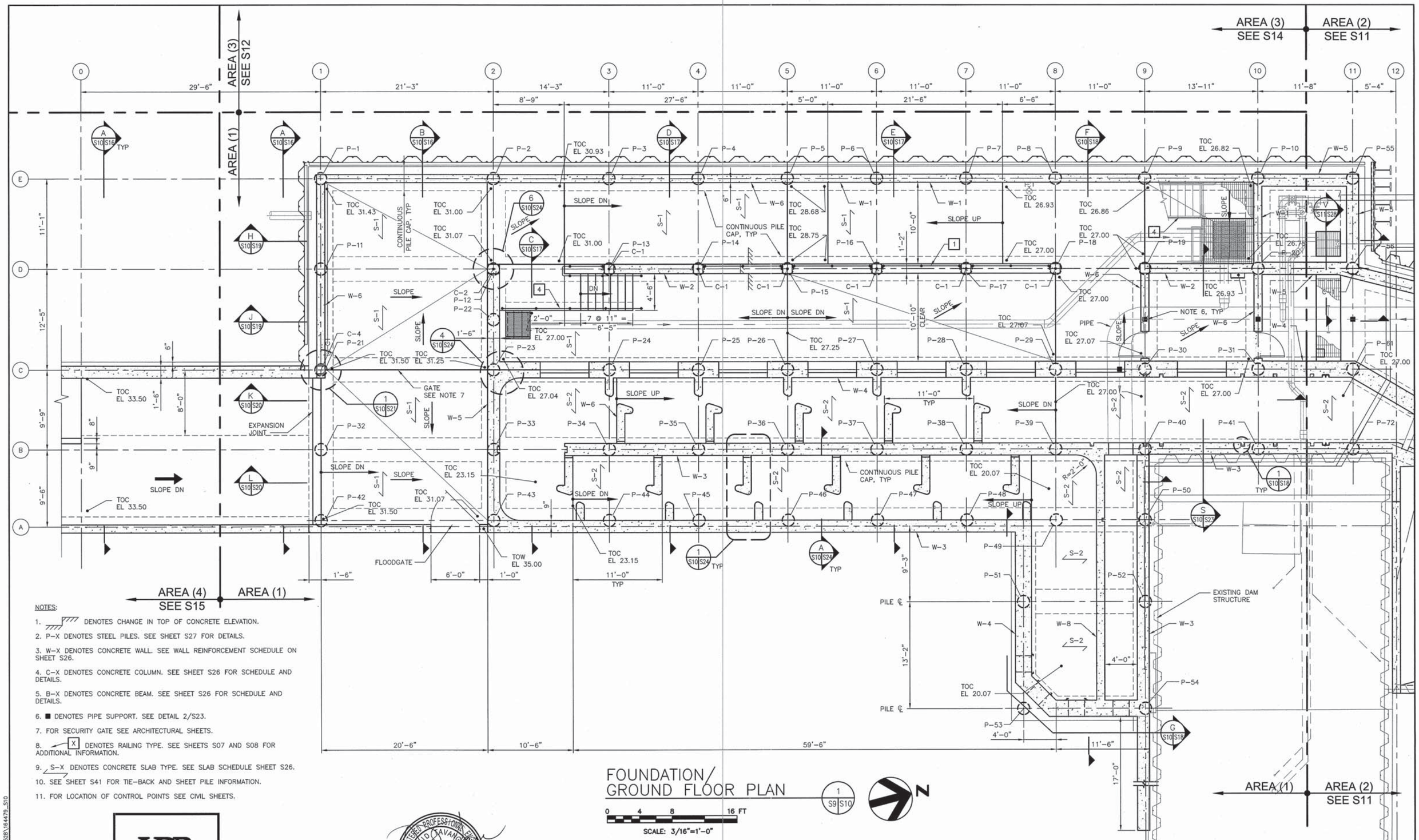

NOTES:

1. DENOTES CHANGE IN TOP OF CONCRETE ELEVATION.
2. P–X DENOTES STEEL PILES. SEE SHEET S27 FOR DETAILS.
3. W–X DENOTES CONCRETE WALL. SEE WALL REINFORCEMENT SCHEDULE ON SHEET S26.
4. C–X DENOTES CONCRETE COLUMN. SEE SHEET S26 FOR SCHEDULE AND DETAILS.
5. B–X DENOTES CONCRETE BEAM. SEE SHEET S26 FOR SCHEDULE AND DETAILS.
6. ■ DENOTES PIPE SUPPORT. SEE DETAIL 2/S23.
7. FOR SECURITY GATE SEE ARCHITECTURAL SHEETS.
8. X DENOTES RAILING TYPE. SEE SHEETS S07 AND S08 FOR ADDITIONAL INFORMATION.
9. S–X DENOTES CONCRETE SLAB TYPE. SEE SLAB SCHEDULE SHEET S26.
10. SEE SHEET S41 FOR TIE–BACK AND SHEET PILE INFORMATION.
11. FOR LOCATION OF CONTROL POINTS SEE CIVIL SHEETS.

FOUNDATION/ GROUND FLOOR PLAN

1 S9 S10

0 4 8 16 FT

SCALE: 3/16"=1'-0"

N

BAR LENGTH ON ORIGINAL DRAWING EQUALS ONE INCH. ADJUST SCALE ACCORDINGLY

HDR Fisheries DESIGN CENTER

REGISTERED PROFESSIONAL ENGINEER
TOM D. TAVANGAR
NO. 54655
EXP. 12/31/15
CIVIL
STATE OF CALIFORNIA
3/18/14

NO.	DATE	REVISION	BY
A	3/17/14	ISSUED FOR BIDS	OT

SONOMA COUNTY WATER AGENCY

SCALE: AS NOTED
DATE: 3/17/14
DRAWN: JKW
REVIEWED:

Sonoma County Water Agency

Mirabel Fish Screen and Fish Ladder Replacement
FOUNDATION PLAN AREA 1

FILE NAME: 164479_s10.dwg
CONTRACT NUMBER: ####

DRAWING NUMBER: S10

SHEET 41 OF 99

C:\pwworking\sea\d0799535\164479_S10

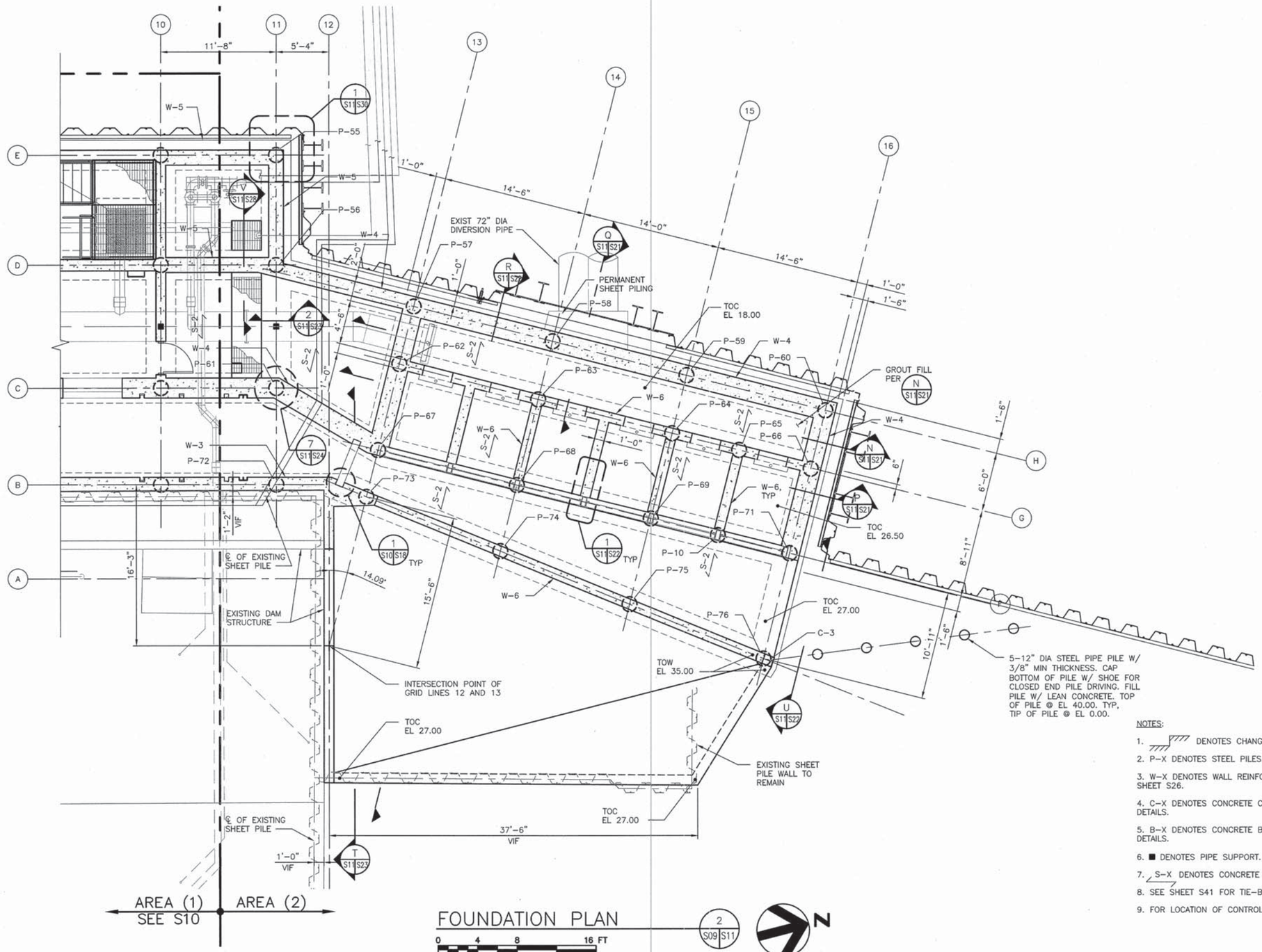

FOUNDATION PLAN

0 4 8 16 FT

SCALE: 3/16"=1'-0"

NOTES:

1. DENOTES CHANGE IN TOP OF CONCRETE ELEVATION.
2. P-X DENOTES STEEL PILES. SEE SHEET S27 FOR DETAILS.
3. W-X DENOTES WALL REINFORCING. SEE WALL REINFORCEMENT SCHEDULE ON SHEET S26.
4. C-X DENOTES CONCRETE COLUMN. SEE SHEET S26 FOR SCHEDULE AND DETAILS.
5. B-X DENOTES CONCRETE BEAM. SEE SHEET S26 FOR SCHEDULE AND DETAILS.
6. ■ DENOTES PIPE SUPPORT. SEE DETAIL 2/S23.
7. S-X DENOTES CONCRETE SLAB TYPE. SEE SLAB SCHEDULE SHEET S26.
8. SEE SHEET S41 FOR TIE-BACK AND SHEET PILE INFORMATION.
9. FOR LOCATION OF CONTROL POINTS SEE CIVIL SHEETS.

BAR LENGTH ON ORIGINAL DRAWING EQUALS ONE INCH. ADJUST SCALE ACCORDINGLY

HDR Fisheries DESIGN CENTER

REGISTERED PROFESSIONAL ENGINEER RONALD TAVANGAR NO. 54655 EXP. 12/31/15 CIVIL STATE OF CALIFORNIA 3/18/14

NO.	DATE	REVISION	BY
A	3/17/14	ISSUED FOR BIDS	OT

SONOMA COUNTY WATER AGENCY

SCALE: AS NOTED DATE: 3/17/14
DRAWN: JKW
REVIEWED:

Sonoma County Water Agency
Mirabel Fish Screen and Fish Ladder Replacement
FOUNDATION PLAN AREA 2

FILE NAME: 164479_s11.dwg
CONTRACT NUMBER: ####
DRAWING NUMBER: S11
SHEET 42 OF 99

C:\pwworking\sea\d0799528\164479_S11

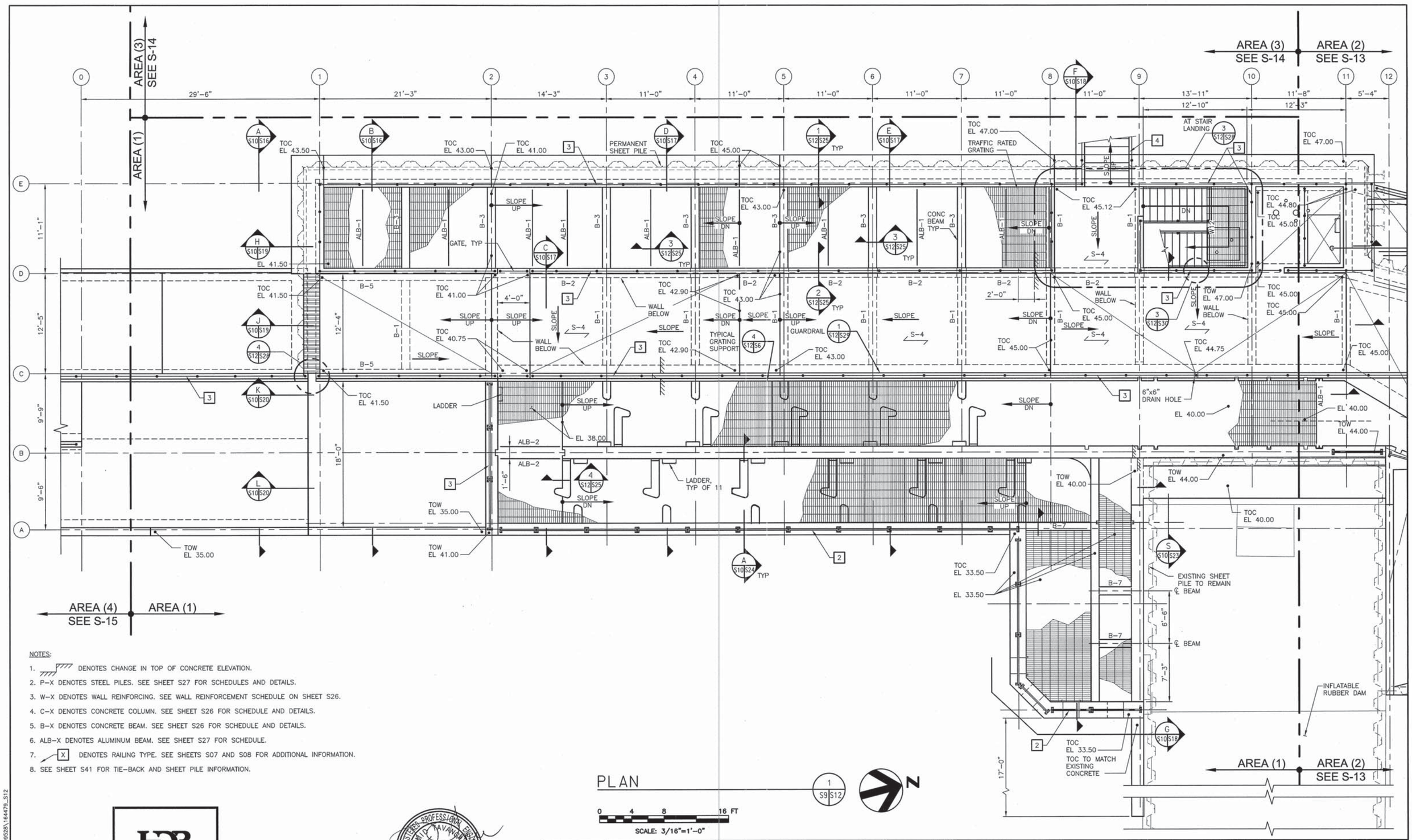

NOTES:

1. DENOTES CHANGE IN TOP OF CONCRETE ELEVATION.
2. P-X DENOTES STEEL PILES. SEE SHEET S27 FOR SCHEDULES AND DETAILS.
3. W-X DENOTES WALL REINFORCING. SEE WALL REINFORCEMENT SCHEDULE ON SHEET S26.
4. C-X DENOTES CONCRETE COLUMN. SEE SHEET S26 FOR SCHEDULE AND DETAILS.
5. B-X DENOTES CONCRETE BEAM. SEE SHEET S26 FOR SCHEDULE AND DETAILS.
6. ALB-X DENOTES ALUMINUM BEAM. SEE SHEET S27 FOR SCHEDULE.
7. X DENOTES RAILING TYPE. SEE SHEETS S07 AND S08 FOR ADDITIONAL INFORMATION.
8. SEE SHEET S41 FOR TIE-BACK AND SHEET PILE INFORMATION.

PLAN 1 S9 S12

0 4 8 16 FT

SCALE: 3/16"=1'-0"

N

BAR LENGTH ON ORIGINAL DRAWING EQUALS ONE INCH. ADJUST SCALE ACCORDINGLY

HDR Fisheries DESIGN CENTER

REGISTERED PROFESSIONAL ENGINEER DAVID NAVANGUL NO. 54655 EXP. 12/31/15 CIVIL STATE OF CALIFORNIA 3/18/14

NO.	DATE	REVISION	BY
A	3/17/14	ISSUED FOR BIDS	OT

SONOMA COUNTY WATER AGENCY

SCALE: AS NOTED
DATE: 3/17/14
DRAWN: JKW
REVIEWED:

Sonoma County Water Agency

Mirabel Fish Screen and Fish Ladder Replacement

TOP DECK PLAN AREA 1

FILE NAME: 164479_s12.dwg
CONTRACT NUMBER: ####

DRAWING NUMBER: S12

SHEET 43 OF 99

C:\pwworking\sea\d0799528\164479_S12

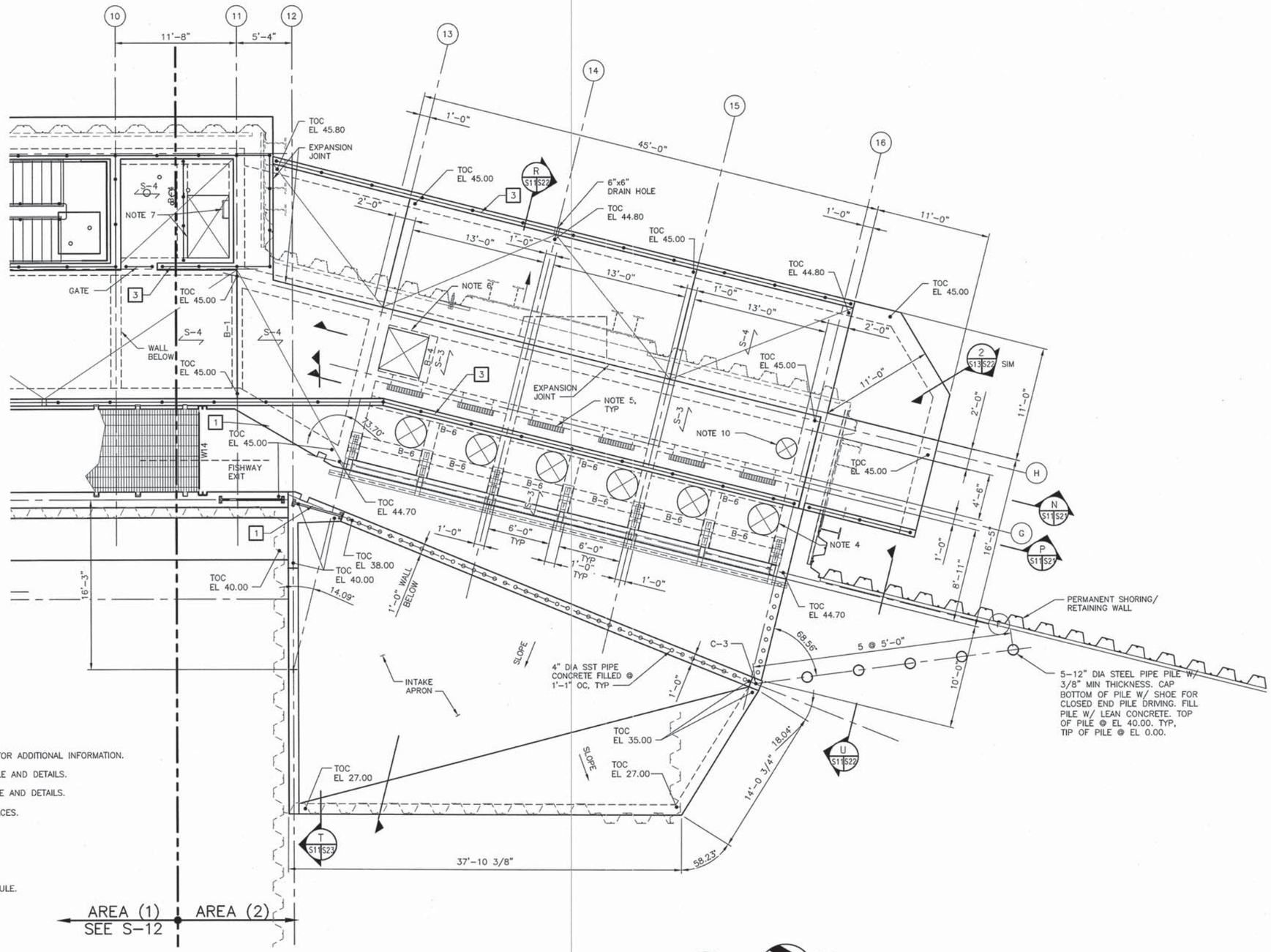

NOTES:

1. X DENOTES RAILING TYPE. SEE SHEETS S07 AND S08 FOR ADDITIONAL INFORMATION.
2. B-X DENOTES CONCRETE BEAM. SEE SHEET S26 FOR SCHEDULE AND DETAILS.
3. S-X DENOTES CONCRETE SLAB. SEE SHEET S26 FOR SCHEDULE AND DETAILS.
4. 36" DIAMETER FIBERGLASS MANHOLE COVER, TYPICAL OF 6 PLACES.
5. TRAFFIC RATED GRATING, TYPICAL OF 6 PLACES.
6. TRAFFIC RATED 4'x4' HINGED ALUMINUM HATCH.
7. 4'x6' HINGED ALUMINUM HATCH WITH LADDER.
8. ALB-X DENOTES ALUMINUM BEAM. SEE SHEET S27 FOR SCHEDULE.
9. SEE SHEET S41 FOR TIE-BACK AND SHEET PILE INFORMATION.
10. 24" DIAMETER TRAFFIC RATED MANHOLE COVER.

PLAN

0 4 8 16 FT

SCALE: 3/16"=1'-0"

2 S9 S13

N

BAR LENGTH ON ORIGINAL DRAWING EQUALS ONE INCH. ADJUST SCALE ACCORDINGLY

HDR Fisheries DESIGN CENTER

REGISTERED PROFESSIONAL ENGINEER KOM YIU TAV ANGKOR NO. 54655 EXP. 12/31/15 CIVIL STATE OF CALIFORNIA

3/18/14

NO.	DATE	REVISION	BY
A	3/17/14	ISSUED FOR BIDS	OT

SONOMA COUNTY WATER AGENCY

SCALE: AS NOTED
DATE: 3/17/14
DRAWN: JKW
REVIEWED:

Sonoma County Water Agency

Mirabel Fish Screen and Fish Ladder Replacement

TOP DECK PLAN AREA 2

FILE NAME: 164479_s13.dwg
CONTRACT NUMBER: ####
DRAWING NUMBER: S13
SHEET 44 OF 99

C:\pwworking\sea\d0799528\164479_S13

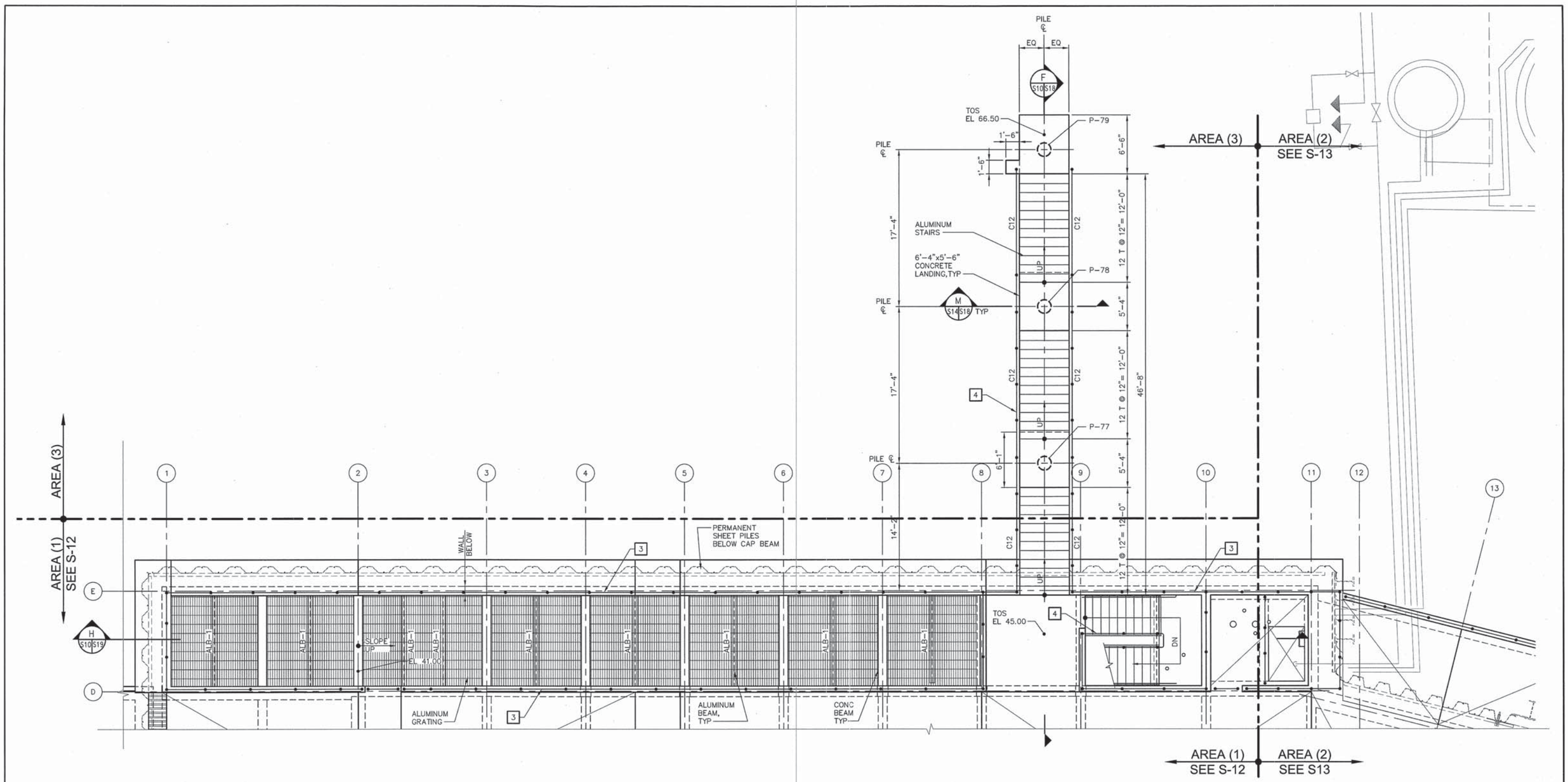

NOTES:

1. X DENOTES RAILING TYPE. SEE SHEETS S07 AND S08 FOR ADDITIONAL INFORMATION.
2. ALB-X DENOTES ALUMINUM BEAM. SEE SHEET S27 FOR SCHEDULE.
3. SEE SHEET S41 FOR TIE-BACK AND SHEET PILE INFORMATION.
4. P-X DENOTES STEEL PILE. SEE SHEET S27 FOR DETAILS.

PLAN

0 4 8 16 FT

SCALE: 3/16"=1'-0"

3
S9 S14

N

BAR LENGTH ON ORIGINAL DRAWING EQUALS ONE INCH. ADJUST SCALE ACCORDINGLY

HDR Fisheries DESIGN CENTER

REGISTERED PROFESSIONAL ENGINEER
RONALD TAVARES
C.E. NO. 54655
EXP. 12/31/15
CIVIL
STATE OF CALIFORNIA
3/18/14

NO.	DATE	REVISION	BY
A	3/17/14	ISSUED FOR BIDS	OT

SONOMA COUNTY WATER AGENCY

SCALE: AS NOTED
DATE: 3/17/14
DRAWN: JKW
REVIEWED:

Sonoma County Water Agency
Mirabel Fish Screen and Fish Ladder Replacement
TOP DECK PLAN AREA 3

FILE NAME: 164479_s14.dwg
CONTRACT NUMBER: ####
DRAWING NUMBER: S14
SHEET 45 OF 99

C:\pwworking\sea\d0799528\164479_S14

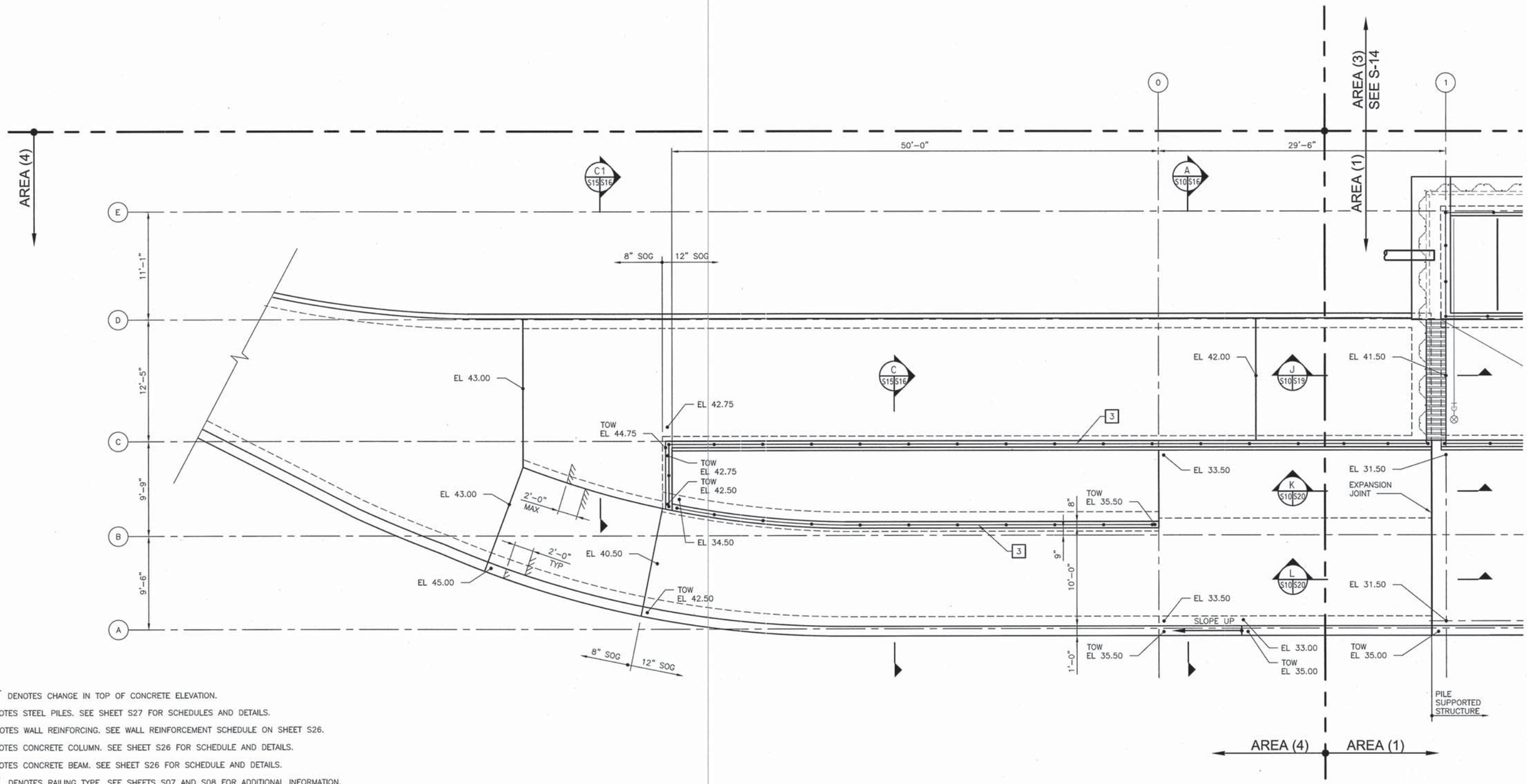

NOTES:

1. DENOTES CHANGE IN TOP OF CONCRETE ELEVATION.
2. P-X DENOTES STEEL PILES. SEE SHEET S27 FOR SCHEDULES AND DETAILS.
3. W-X DENOTES WALL REINFORCING. SEE WALL REINFORCEMENT SCHEDULE ON SHEET S26.
4. C-X DENOTES CONCRETE COLUMN. SEE SHEET S26 FOR SCHEDULE AND DETAILS.
5. B-X DENOTES CONCRETE BEAM. SEE SHEET S26 FOR SCHEDULE AND DETAILS.
6. X DENOTES RAILING TYPE. SEE SHEETS S07 AND S08 FOR ADDITIONAL INFORMATION.
7. SEE SHEET S41 FOR TIE-BACK AND SHEET PILE INFORMATION.
8. FOR LOCATION OF CONTROL POINTS SEE CIVIL SHEETS.

PLAN

4
S9 S15

N

0 4 8 16 FT

SCALE: 3/16"=1'-0"

BAR LENGTH ON ORIGINAL DRAWING EQUALS ONE INCH. ADJUST SCALE ACCORDINGLY

HDR Fisheries DESIGN CENTER

REGISTERED PROFESSIONAL ENGINEER
JOMA P. TAVANGAR
NO. 54655
EXP. 12/31/15
CIVIL
STATE OF CALIFORNIA
3/18/14

NO.	DATE	REVISION	BY
A	3/17/14	ISSUED FOR BIDS	OT

SONOMA COUNTY WATER AGENCY

SCALE: AS NOTED
DATE: 3/17/14
DRAWN: JKW
REVIEWED:

Sonoma County Water Agency
Mirabel Fish Screen and Fish Ladder Replacement
ROADWAY PLAN AREA 4

FILE NAME: 164479_s15.dwg
CONTRACT NUMBER: ####
DRAWING NUMBER: S15
SHEET 46 OF 99

C:\pwworking\sea\d0799528\164479_S15

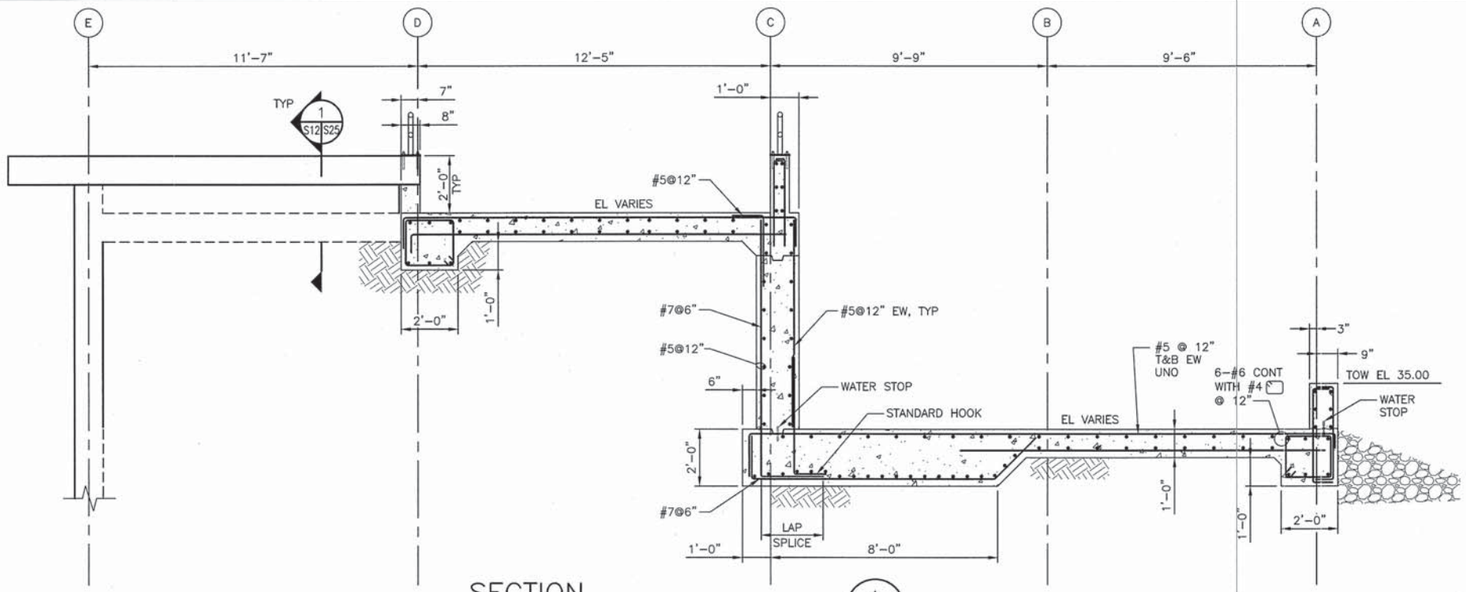

SECTION A S10 S16

0 2 4 8 FT

SCALE: 3/8"=1'-0"

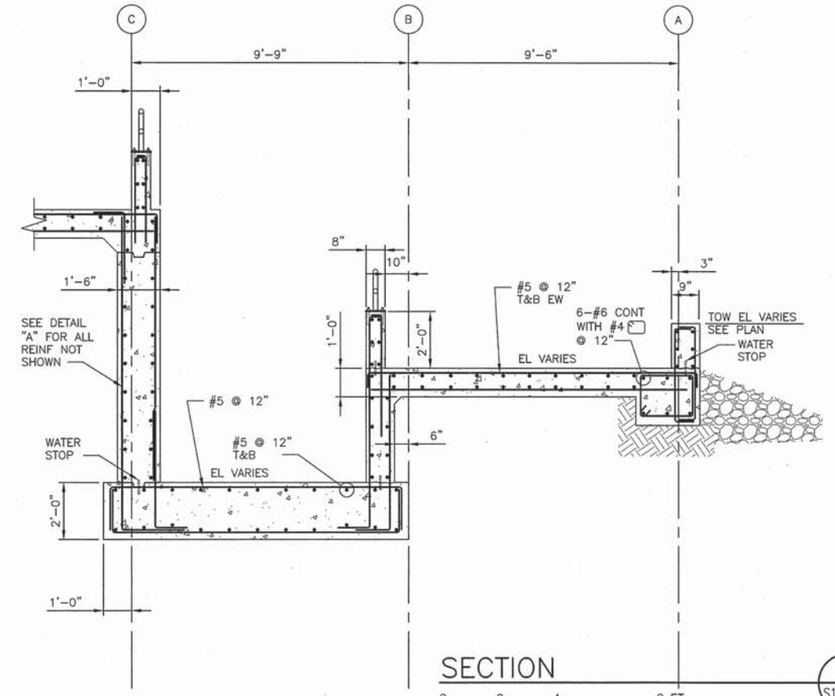

SECTION C S15 S16

0 2 4 8 FT

SCALE: 3/8"=1'-0"

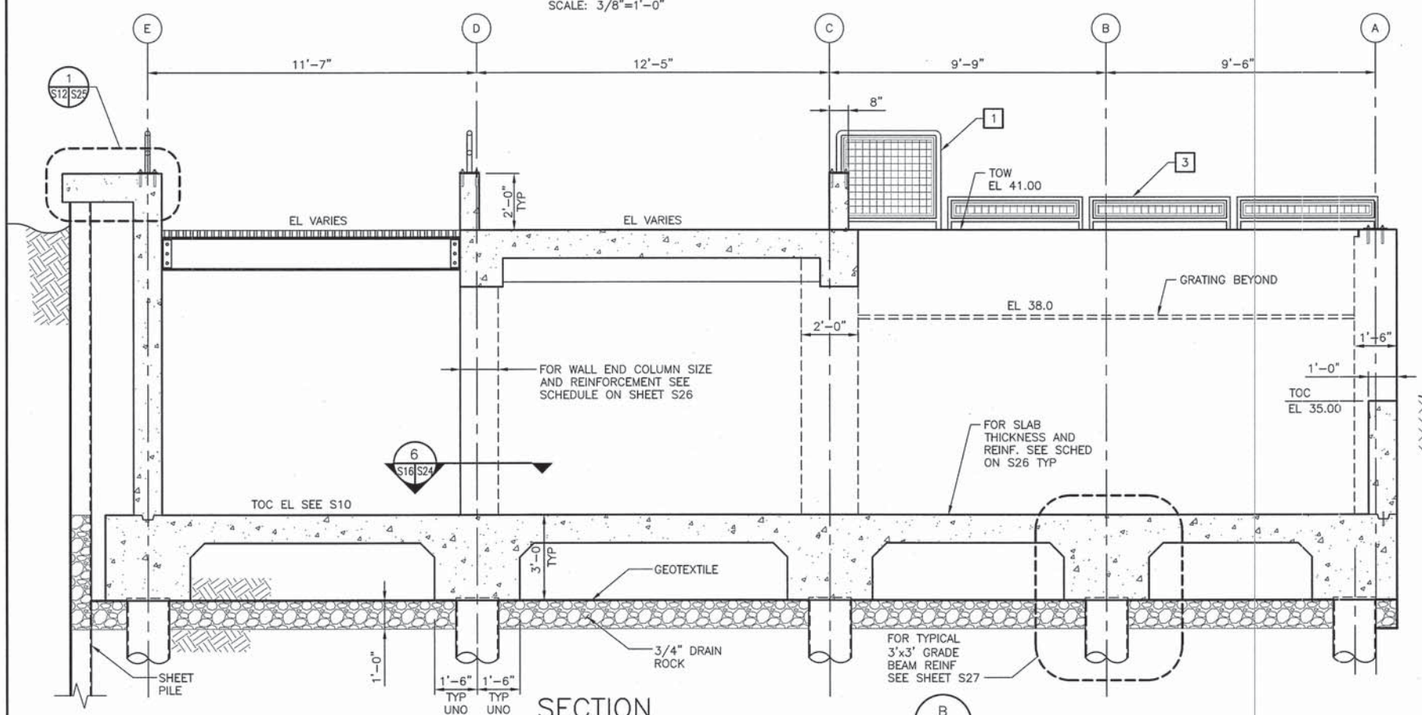

SECTION B S10 S16

0 2 4 8 FT

SCALE: 3/8"=1'-0"

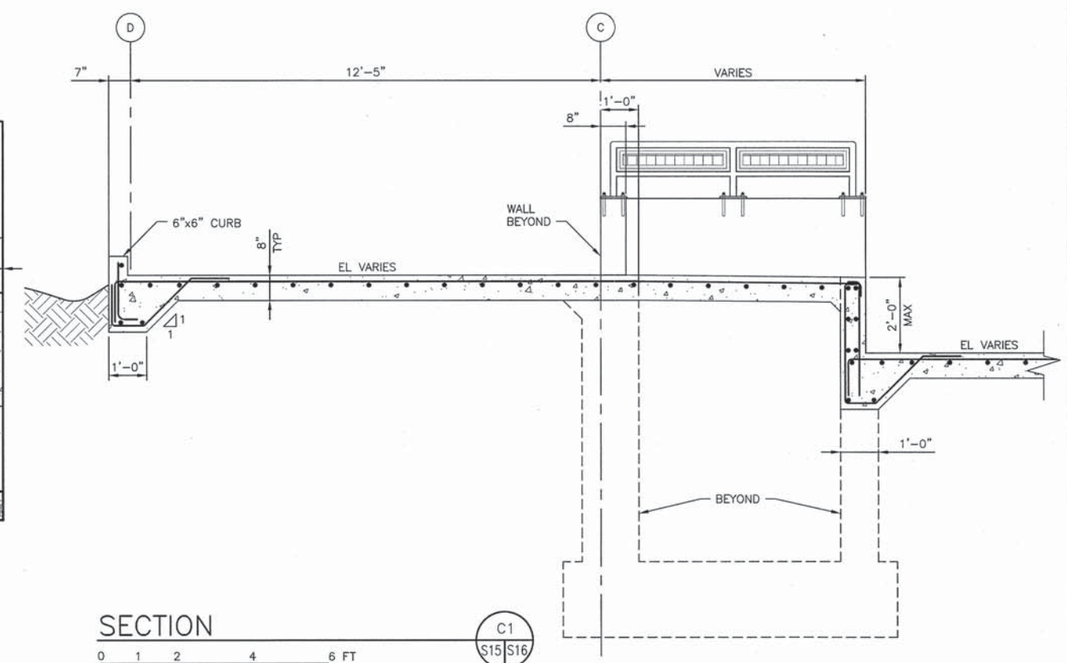

SECTION C1 S15 S16

0 1 2 4 6 FT

SCALE: 1/2"=1'-0"

BAR LENGTH ON ORIGINAL DRAWING EQUALS ONE INCH. ADJUST SCALE ACCORDINGLY

HDR Fisheries DESIGN CENTER

REGISTERED PROFESSIONAL ENGINEER
OMID TAVAKOLI
NO. 54655
EXP. 12/31/15
CIVIL
STATE OF CALIFORNIA
3/18/14

NO.	DATE	REVISION	BY
A	3/17/14	ISSUED FOR BIDS	OT

SONOMA COUNTY WATER AGENCY

SCALE: AS NOTED
DATE: 3/17/14
DRAWN: JKW
REVIEWED:

Sonoma County Water Agency

Mirabel Fish Screen and Fish Ladder Replacement

STRUCTURAL SECTIONS 1

FILE NAME: 164479_S16.DWG
CONTRACT NUMBER: ####

DRAWING NUMBER: S16

SHEET 47 OF 99

C:\pwworking\sea\d0799528\164479_S16

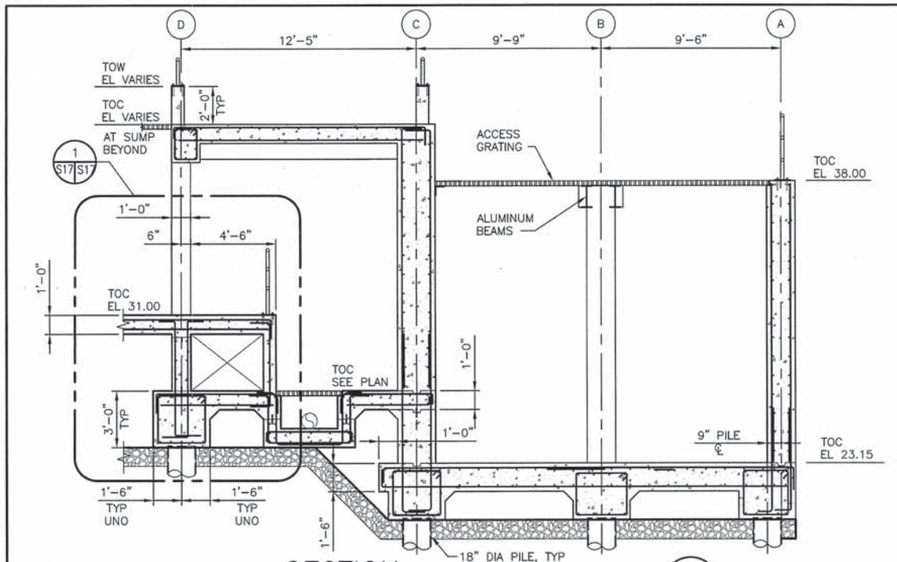

SECTION C

0 4 8 12 FT

SCALE: 1/4"=1'-0"

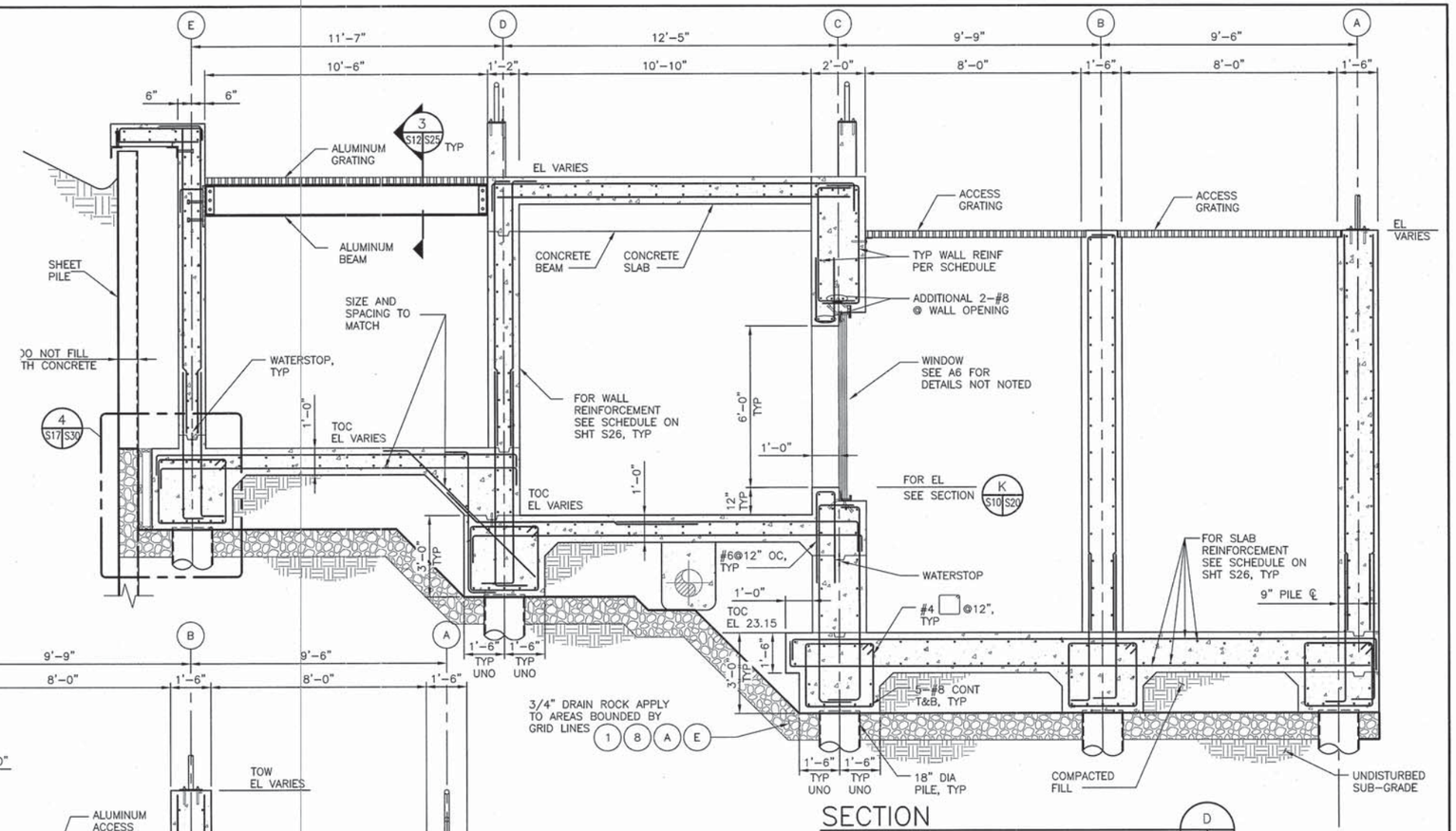

SECTION D

0 2 4 8 FT

SCALE: 3/8"=1'-0"

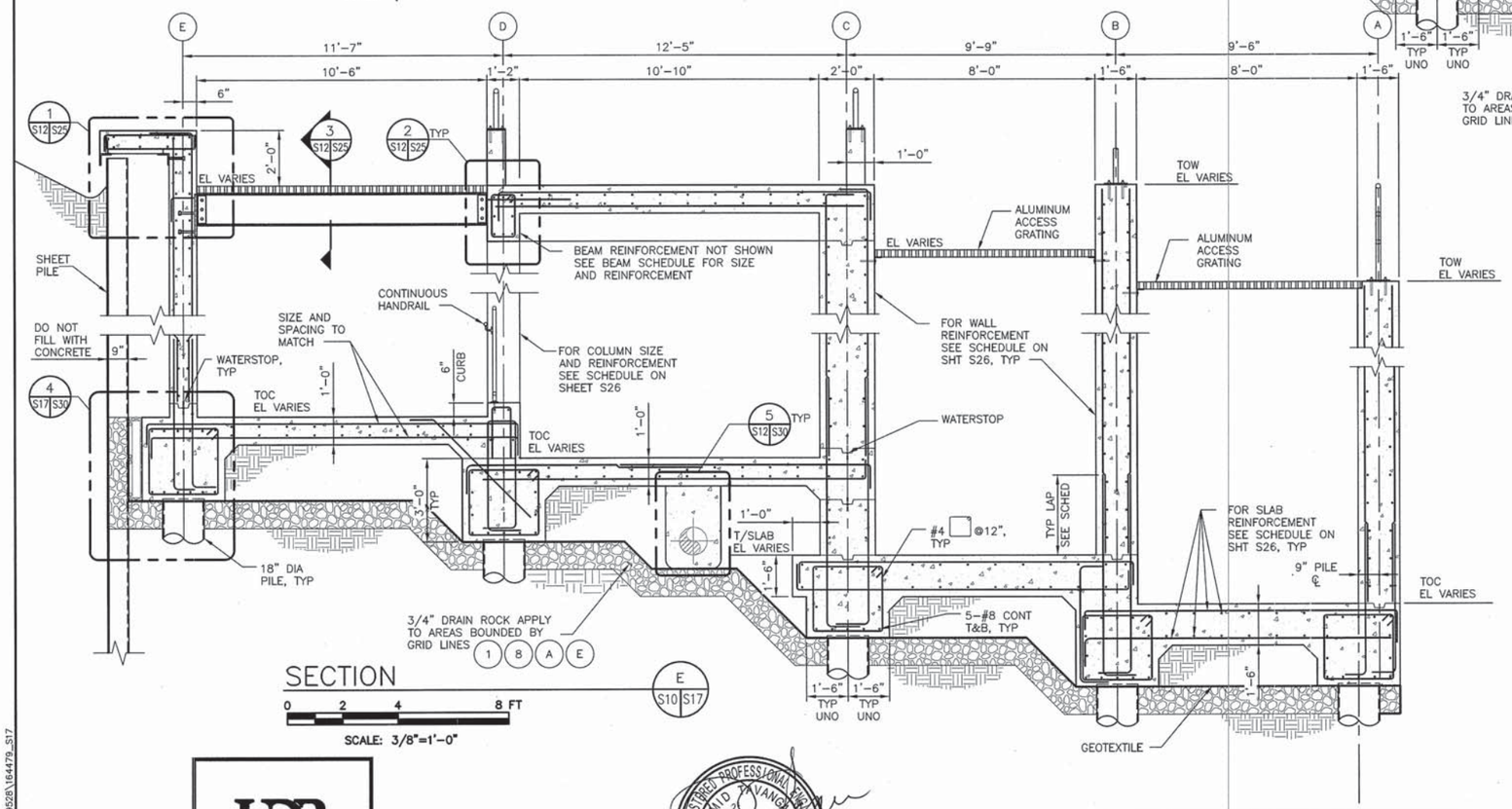

SECTION E

0 2 4 8 FT

SCALE: 3/8"=1'-0"

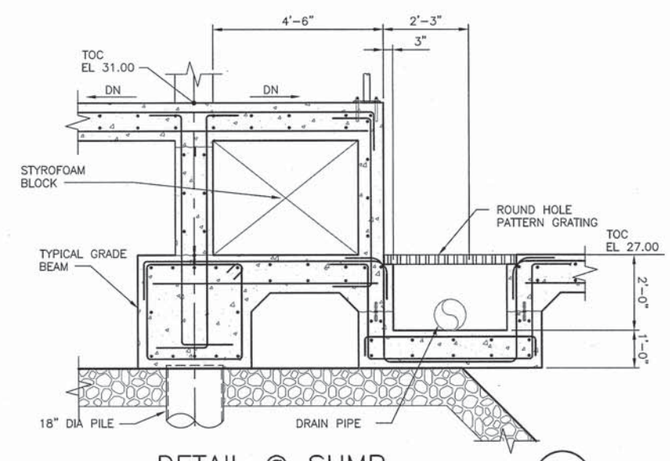

DETAIL @ SUMP

0 1 2 4 6 FT

SCALE: 1/2"=1'-0"

1
S17 S17

BAR LENGTH ON ORIGINAL DRAWING EQUALS ONE INCH. ADJUST SCALE ACCORDINGLY

HDR Fisheries DESIGN CENTER

REGISTERED PROFESSIONAL ENGINEER DAVID P. AVANGAR NO. 54655 EXP. 12/31/15 CIVIL STATE OF CALIFORNIA 3/18/14

NO.	DATE	REVISION	BY
A	3/17/14	ISSUED FOR BIDS	OT

SONOMA COUNTY WATER AGENCY

SCALE: AS NOTED
DATE: 3/17/14
DRAWN: JKW
REVIEWED:

Sonoma County Water Agency

Mirabel Fish Screen and Fish Ladder Replacement

STRUCTURAL SECTIONS 2

FILE NAME: 164479_s17.dwg
CONTRACT NUMBER: ####

DRAWING NUMBER: S17

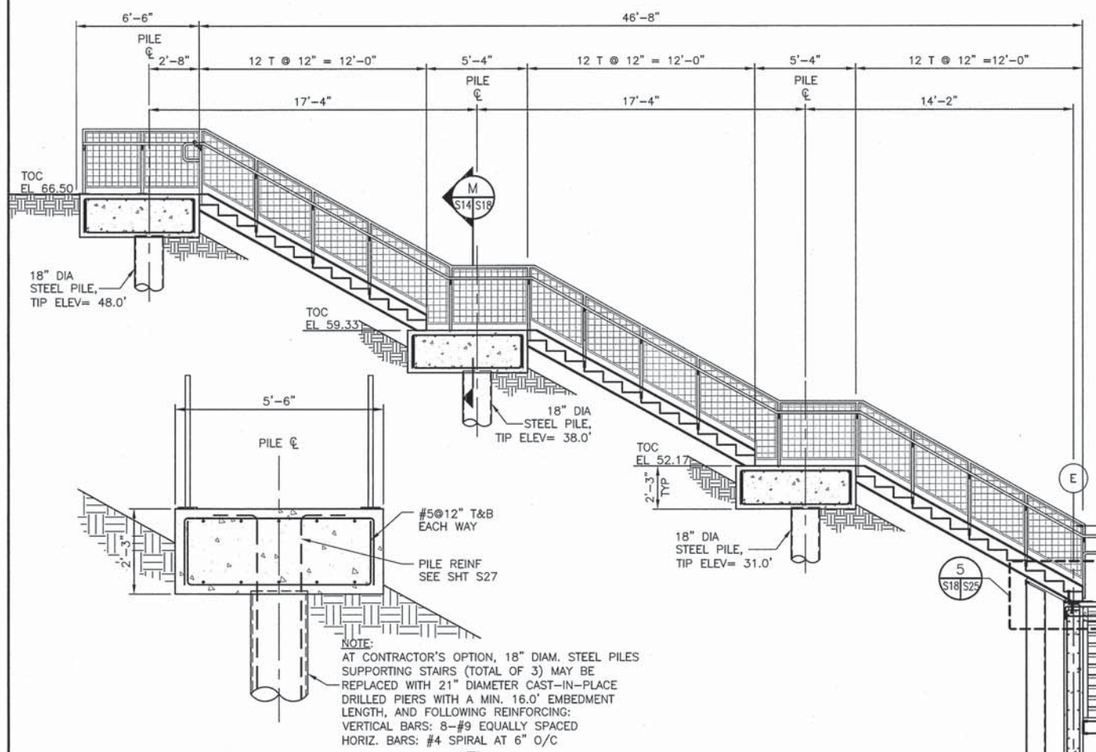

SECTION M S14 S18

0 1 2 4 6 FT

SCALE: 1/2"=1'-0"

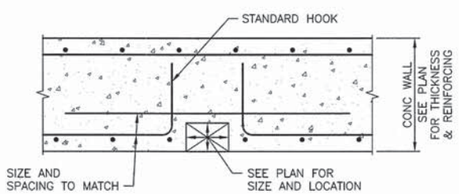

TYPICAL DETAIL AT GUIDE SLOTS 1 S10 S18

0 1 2 4 FT

SCALE: 3/4"=1'-0"

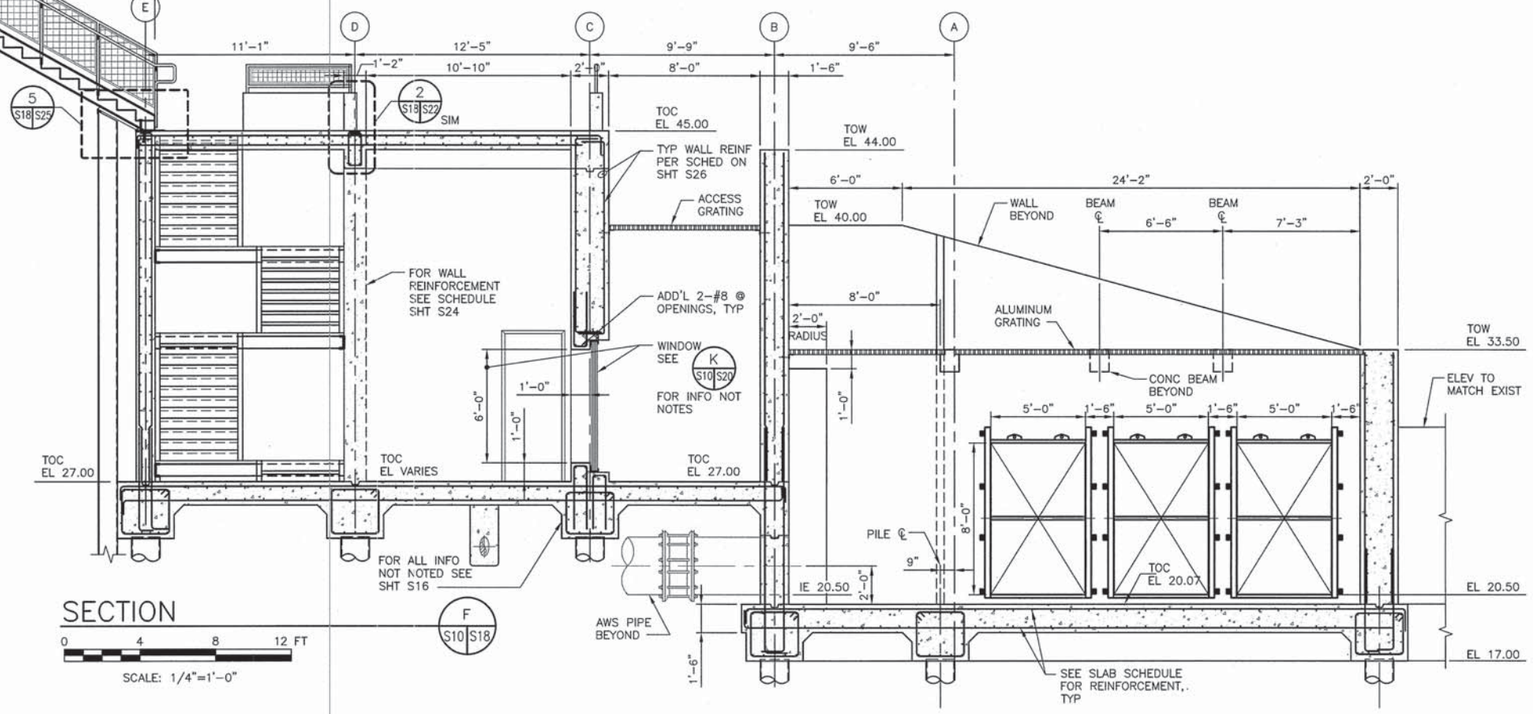

SECTION F S10 S18

0 4 8 12 FT

SCALE: 1/4"=1'-0"

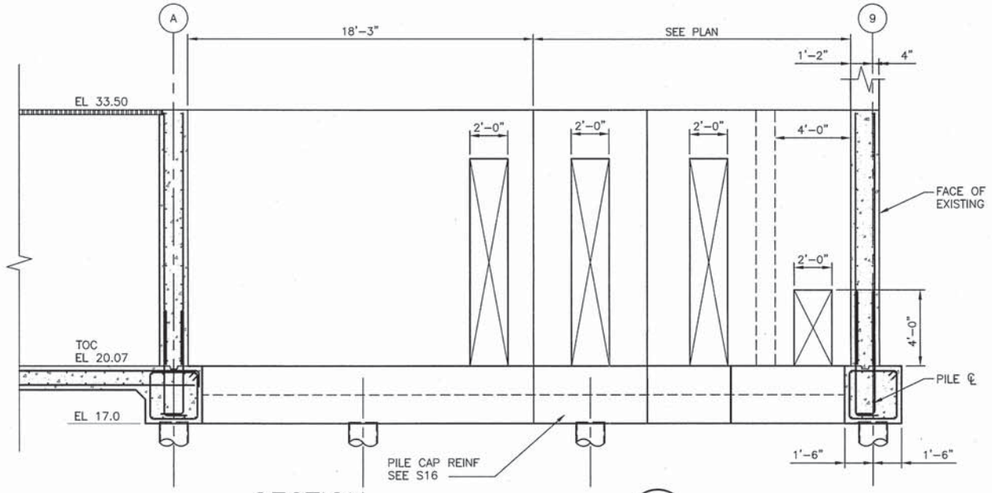

SECTION G S10 S18

0 4 8 12 FT

SCALE: 1/4"=1'-0"

BAR LENGTH ON ORIGINAL DRAWING EQUALS ONE INCH. ADJUST SCALE ACCORDINGLY

HDR Fisheries DESIGN CENTER

REGISTERED PROFESSIONAL ENGINEER RONALD TAVANDAR NO. 54655 EXP. 12/31/15 CIVIL STATE OF CALIFORNIA

3/18/14

NO.	DATE	REVISION	BY
A	3/17/14	ISSUED FOR BIDS	OT

SONOMA COUNTY WATER AGENCY

SCALE: AS NOTED | DATE: 3/17/14

DRAWN: JKW

REVIEWED:

Sonoma County Water Agency

Mirabel Fish Screen and Fish Ladder Replacement

STRUCTURAL SECTIONS 3

FILE NAME: 164479_s18.dwg

CONTRACT NUMBER: ####

DRAWING NUMBER: S18

SHEET 49 OF 99

C:\pwworking\sec\d0799528\164479_S18

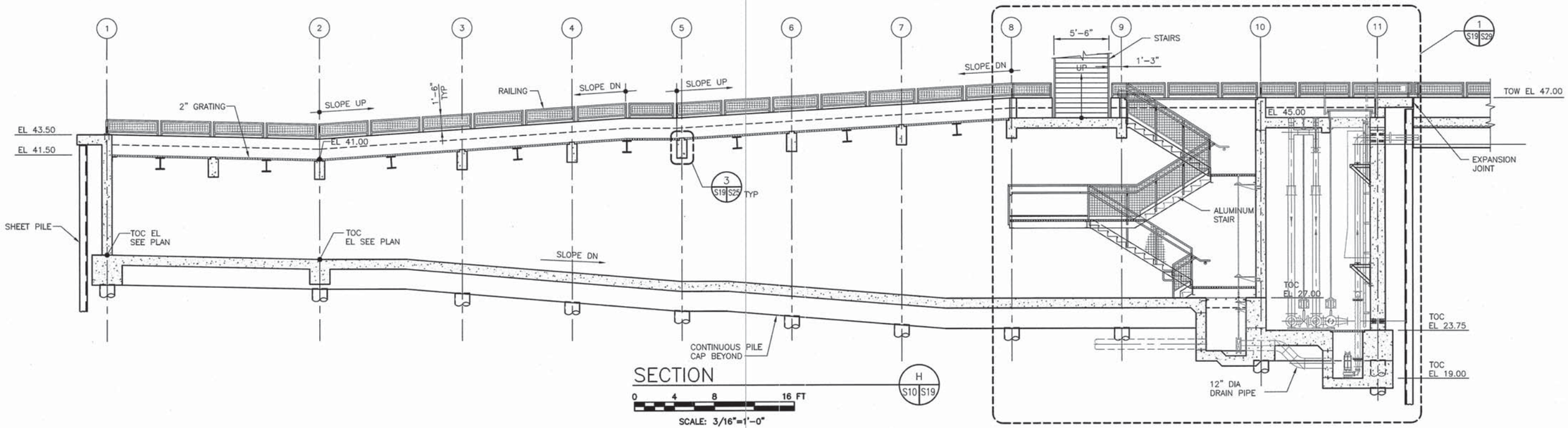

SECTION H S10 S19

0 4 8 16 FT

SCALE: 3/16"=1'-0"

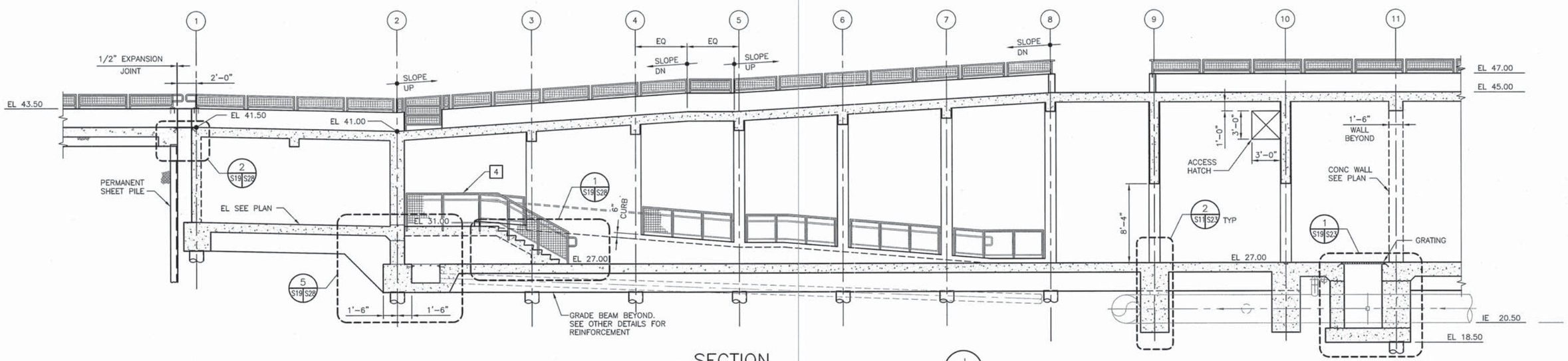

SECTION J S10 S19

0 4 8 16 FT

SCALE: 3/16"=1'-0"

BAR LENGTH ON ORIGINAL DRAWING EQUALS ONE INCH. ADJUST SCALE ACCORDINGLY

HDR Fisheries DESIGN CENTER

REGISTERED PROFESSIONAL ENGINEER — OMID TAVANGAR — NO. 54655 — EXP. 12/31/15 — CIVIL — STATE OF CALIFORNIA — 3/18/14

NO.	DATE	REVISION	BY
A	3/17/14	ISSUED FOR BIDS	OT

SONOMA COUNTY WATER AGENCY

SCALE: AS NOTED | DATE: 3/17/14
DRAWN: JKW
REVIEWED:

Sonoma County Water Agency

Mirabel Fish Screen and Fish Ladder Replacement
STRUCTURAL SECTIONS 4

FILE NAME: 164479_s19.dwg
CONTRACT NUMBER: ####
DRAWING NUMBER: S19
SHEET 50 OF 99

C:\pwworking\sea\d0799528\164479_S19

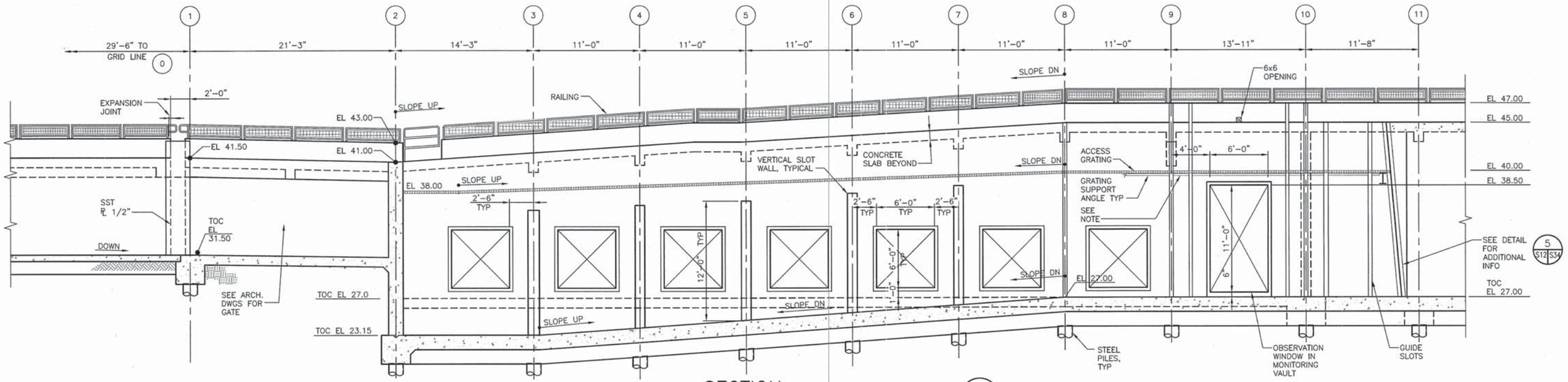

SECTION K S10 S20

0 4 8 16 FT

SCALE: 3/16"=1'-0"

NOTE:
GRATING SUPPORT ANGLE SHALL SPAN BETWEEN GUIDE SLOTS WITH MIN (2) ANCHOR BOLTS (4" FROM EACH END).

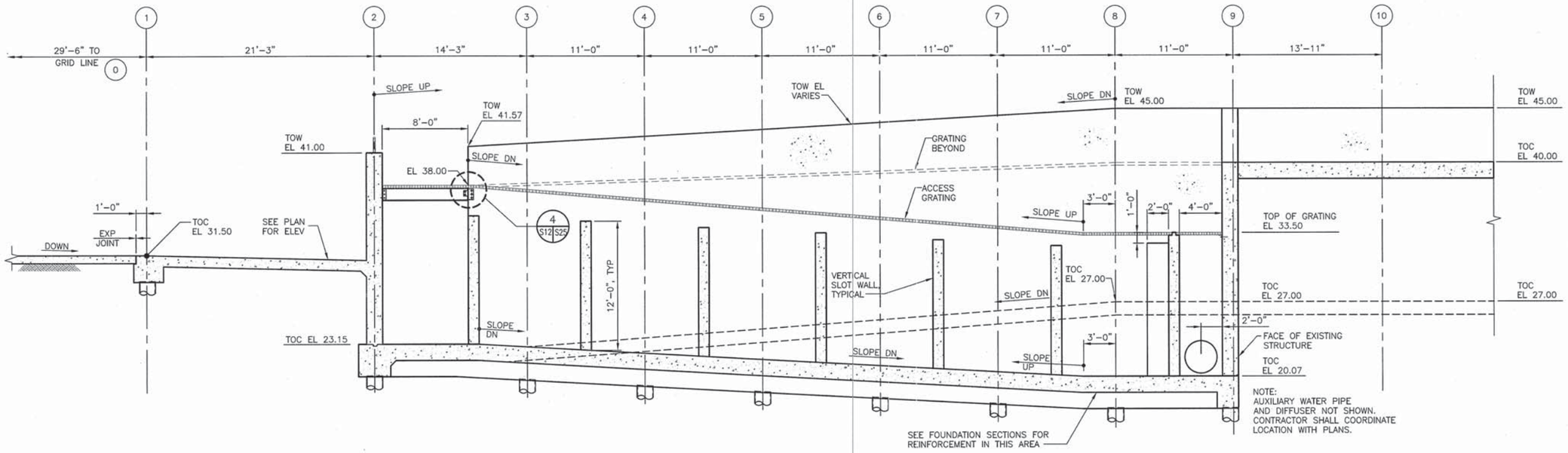

NOTE:
AUXILIARY WATER PIPE AND DIFFUSER NOT SHOWN. CONTRACTOR SHALL COORDINATE LOCATION WITH PLANS.

SECTION L S10 S20

0 4 8 16 FT

SCALE: 3/16"=1'-0"

BAR LENGTH ON ORIGINAL DRAWING EQUALS ONE INCH. ADJUST SCALE ACCORDINGLY

HDR Fisheries DESIGN CENTER

REGISTERED PROFESSIONAL ENGINEER TOM D. TAVANGAR NO. 54655 EXP. 12/31/15 CIVIL STATE OF CALIFORNIA 3/18/14

NO.	DATE	REVISION	BY
A	3/17/14	ISSUED FOR BIDS	OT

SONOMA COUNTY WATER AGENCY

SCALE: AS NOTED
DATE: 3/17/14
DRAWN: JKW
REVIEWED:

Sonoma County Water Agency
Mirabel Fish Screen and Fish Ladder Replacement
STRUCTURAL SECTIONS 5

FILE NAME: 164479_s20.dwg
CONTRACT NUMBER: ####
DRAWING NUMBER: S20
SHEET 51 OF 99

C:\pwworking\ceo\d0799528\164479_S20

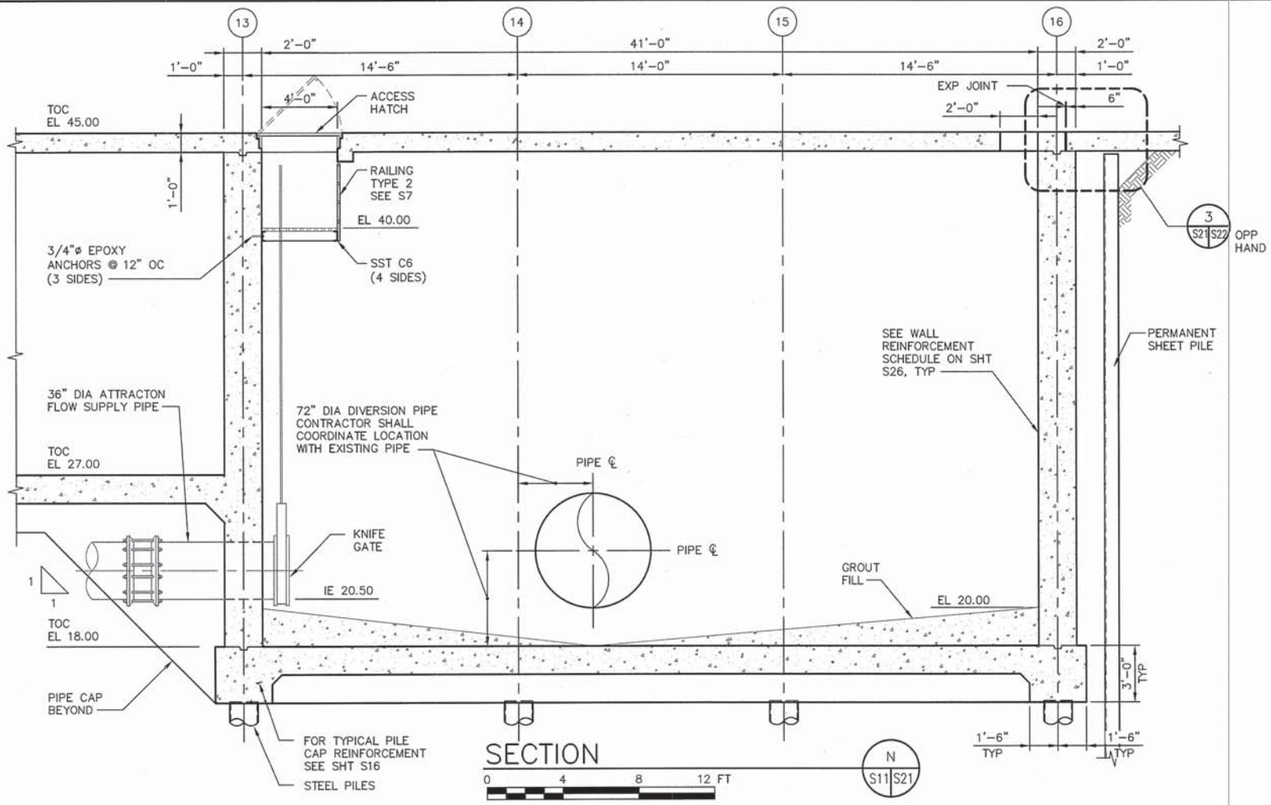

SECTION

N S11 S21

0 4 8 12 FT

SCALE: 1/4"=1'-0"

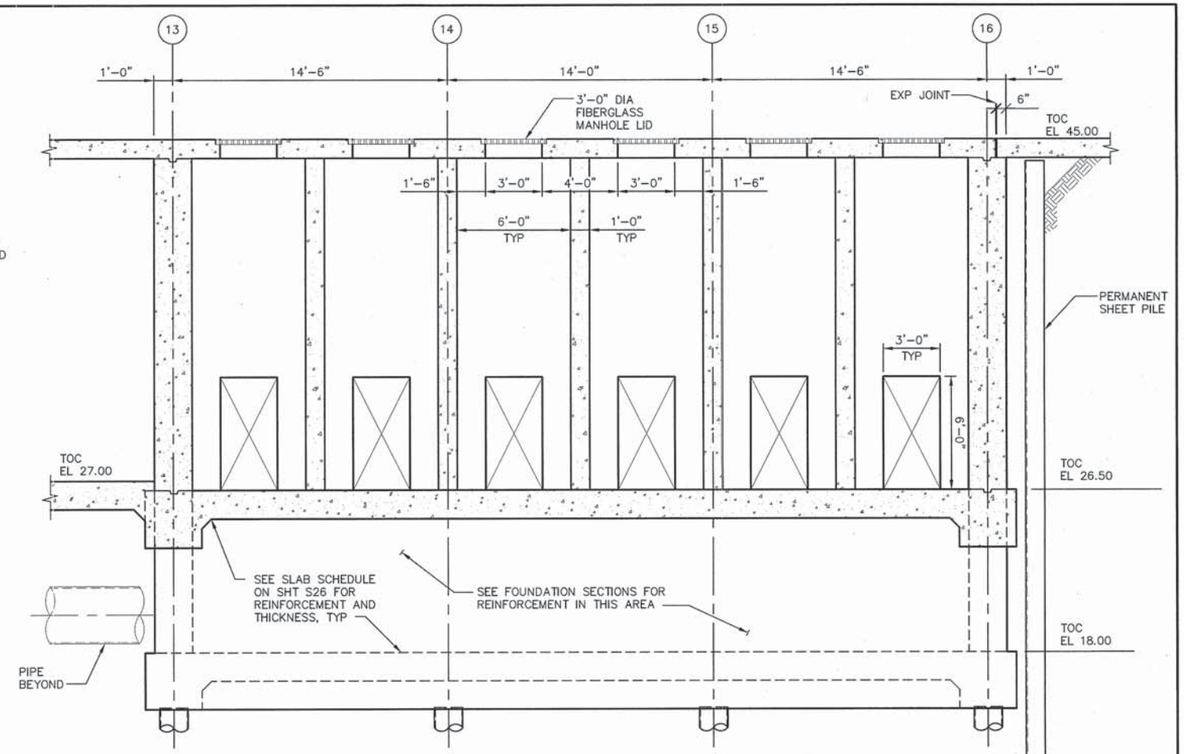

SECTION

P S11 S21

0 4 8 12 FT

SCALE: 1/4"=1'-0"

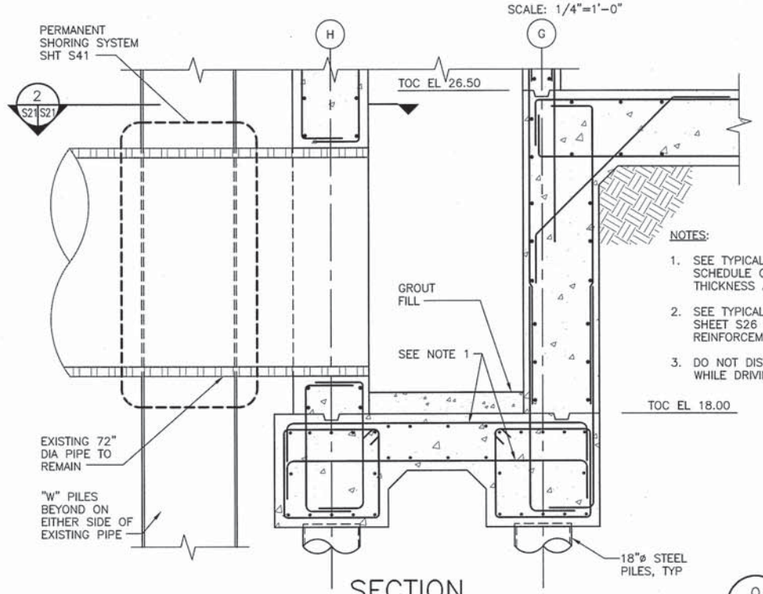

NOTES:

1. SEE TYPICAL SLAB DETAIL AND SCHEDULE ON SHEET S26 FOR THICKNESS AND REINFORCEMENT.
2. SEE TYPICAL WALL SCHEDULE ON SHEET S26 FOR THICKNESS AND REINFORCEMENT.
3. DO NOT DISTURB EXISTING PIPE WHILE DRIVING PILES.

SECTION

Q S11 S21

0 1 2 4 6 FT

SCALE: 1/2"=1'-0"

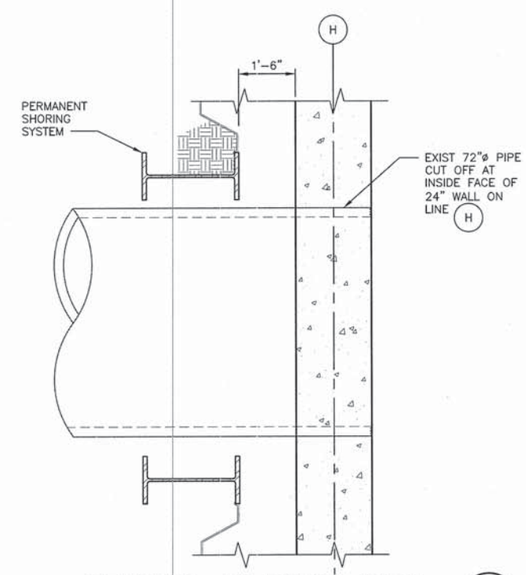

SECTION AT EXIST PIPE

2 S21 S21

0 1 2 4 6 FT

SCALE: 1/2"=1'-0"

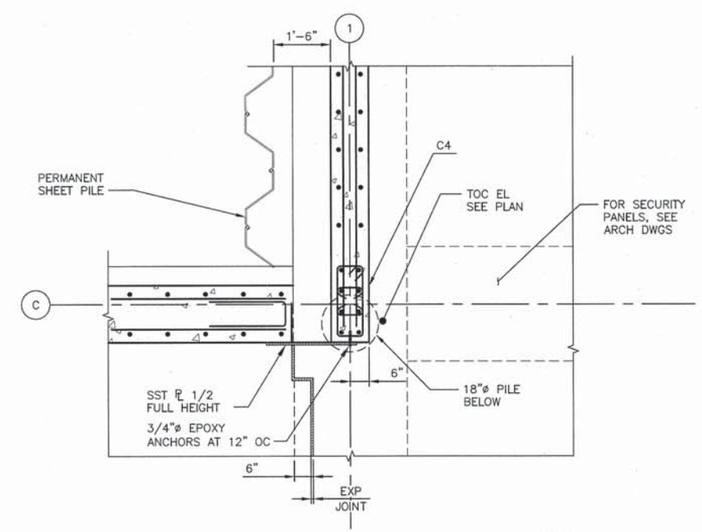

DETAIL

1 S10 S21

0 1 2 4 6 FT

SCALE: 1/2"=1'-0"

BAR LENGTH ON ORIGINAL DRAWING EQUALS ONE INCH. ADJUST SCALE ACCORDINGLY

HDR Fisheries DESIGN CENTER

REGISTERED PROFESSIONAL ENGINEER DAVID TAVANGAR NO. 54655 EXP. 12/31/15 CIVIL STATE OF CALIFORNIA

3/18/14

NO.	DATE	REVISION	BY
A	3/17/14	ISSUED FOR BIDS	OT

SONOMA COUNTY WATER AGENCY

SCALE: AS NOTED | DATE: 3/17/14

DRAWN: ACB

REVIEWED:

Sonoma County Water Agency

Mirabel Fish Screen and Fish Ladder Replacement

STRUCTURAL SECTIONS 6

FILE NAME: 164479_s21.dwg

CONTRACT NUMBER: ####

DRAWING NUMBER: S21

SHEET 52 OF 99

C:\pwworking\sea\d0799528\164479_S21

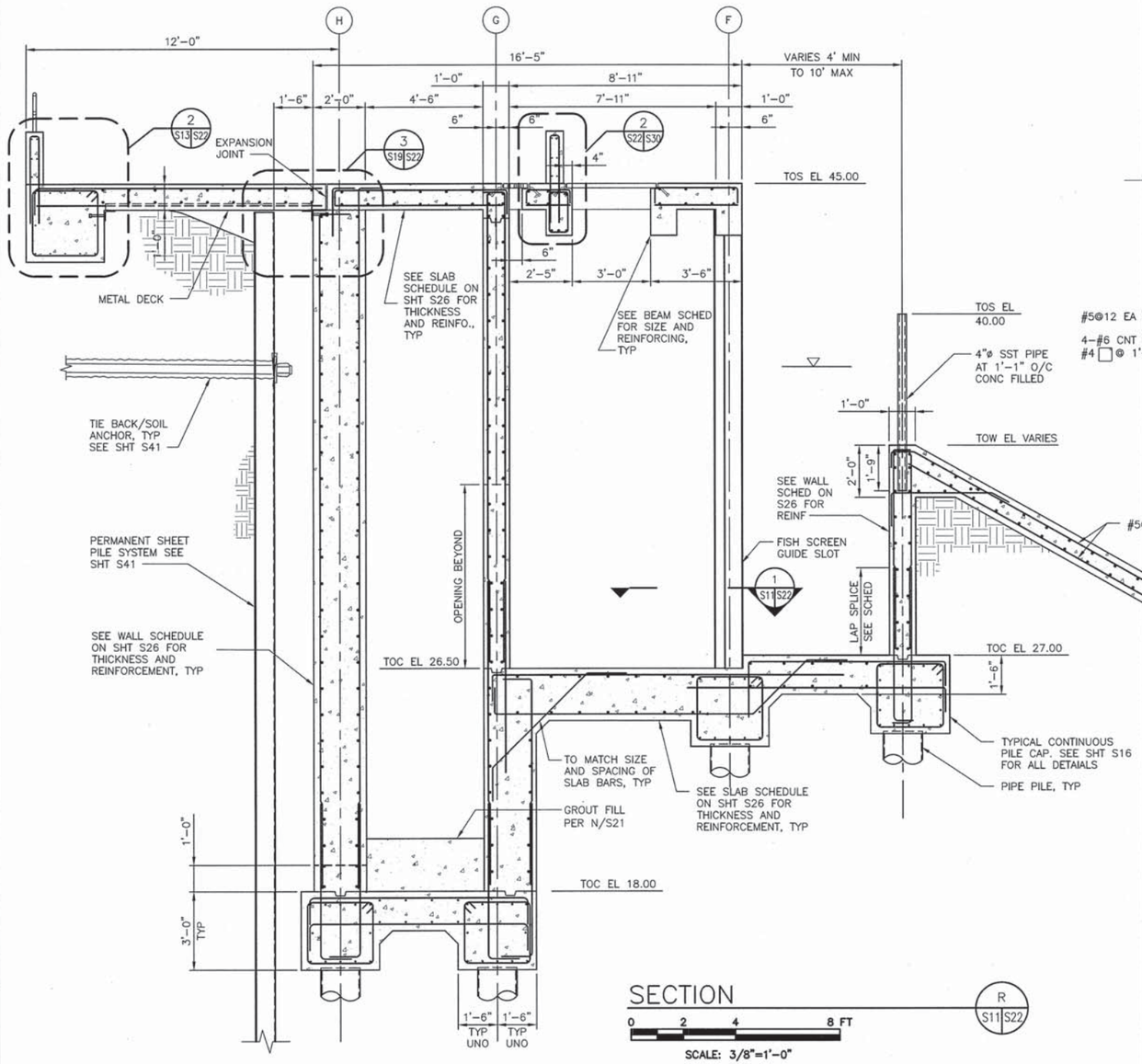

SECTION R S11 S22

0 2 4 8 FT

SCALE: 3/8"=1'-0"

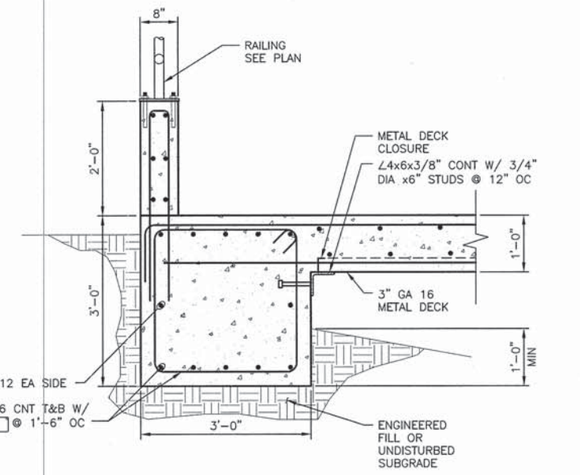

SECTION 2 S13 S22

0 1 2 4 FT

SCALE: 3/4"=1'-0"

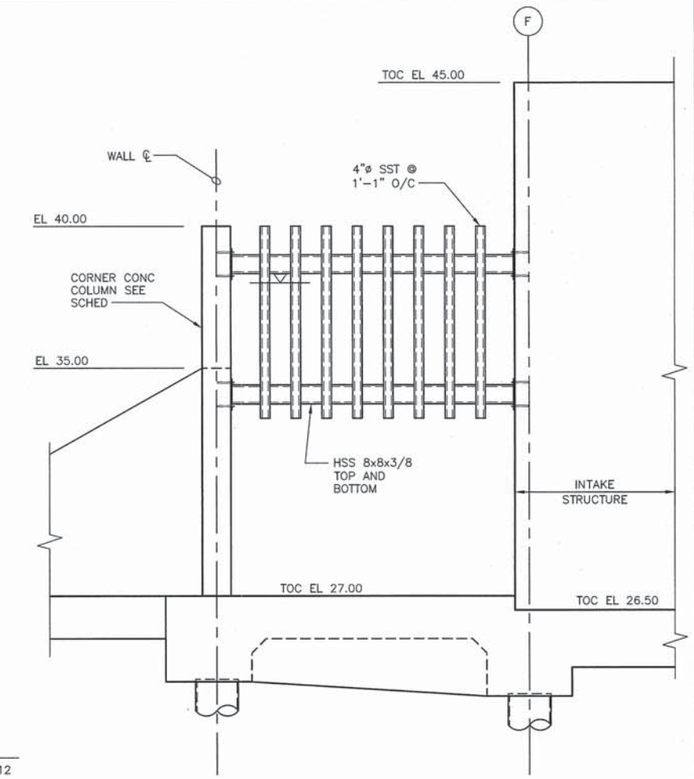

SECTION U S11 S22

0 2 4 8 FT

SCALE: 3/8"=1'-0"

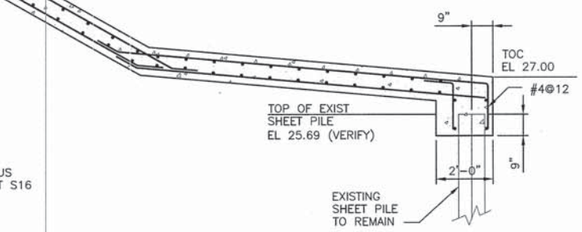

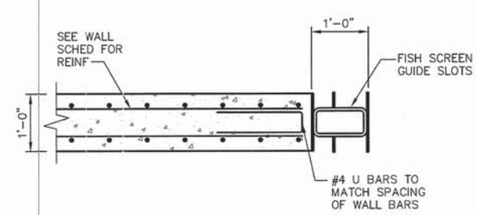

SECTION 1 S11 S22

0 1 2 4 FT

SCALE: 3/4"=1'-0"

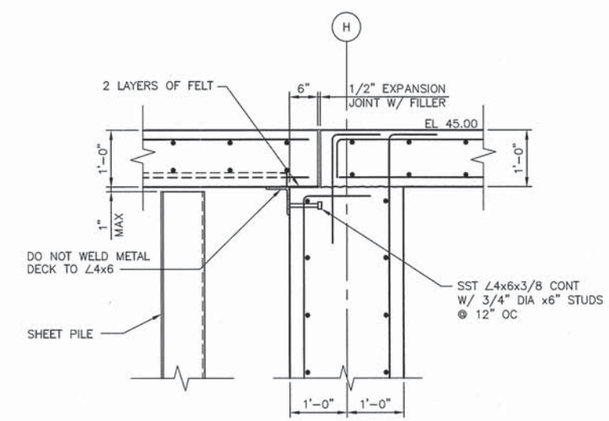

DETAIL 3 S21 S22

0 1 2 4 FT

SCALE: 3/4"=1'-0"

BAR LENGTH ON ORIGINAL DRAWING EQUALS ONE INCH. ADJUST SCALE ACCORDINGLY

HDR Fisheries DESIGN CENTER

REGISTERED PROFESSIONAL ENGINEER — RONALD TAVANGAR — NO. 54655 EXP. 12/31/15 — CIVIL — STATE OF CALIFORNIA — 3/18/14

NO.	DATE	REVISION	BY
A	3/17/14	ISSUED FOR BIDS	OT

SONOMA COUNTY WATER AGENCY

SCALE: AS NOTED | DATE: 3/17/14
DRAWN: ACB
REVIEWED:

Sonoma County Water Agency

Mirabel Fish Screen and Fish Ladder Replacement

STRUCTURAL SECTIONS 7

FILE NAME: 164479_s22.dwg
CONTRACT NUMBER: ####

DRAWING NUMBER: S22

SHEET 53 OF 99

C:\pwworking\sea\d0799528\164479_S22

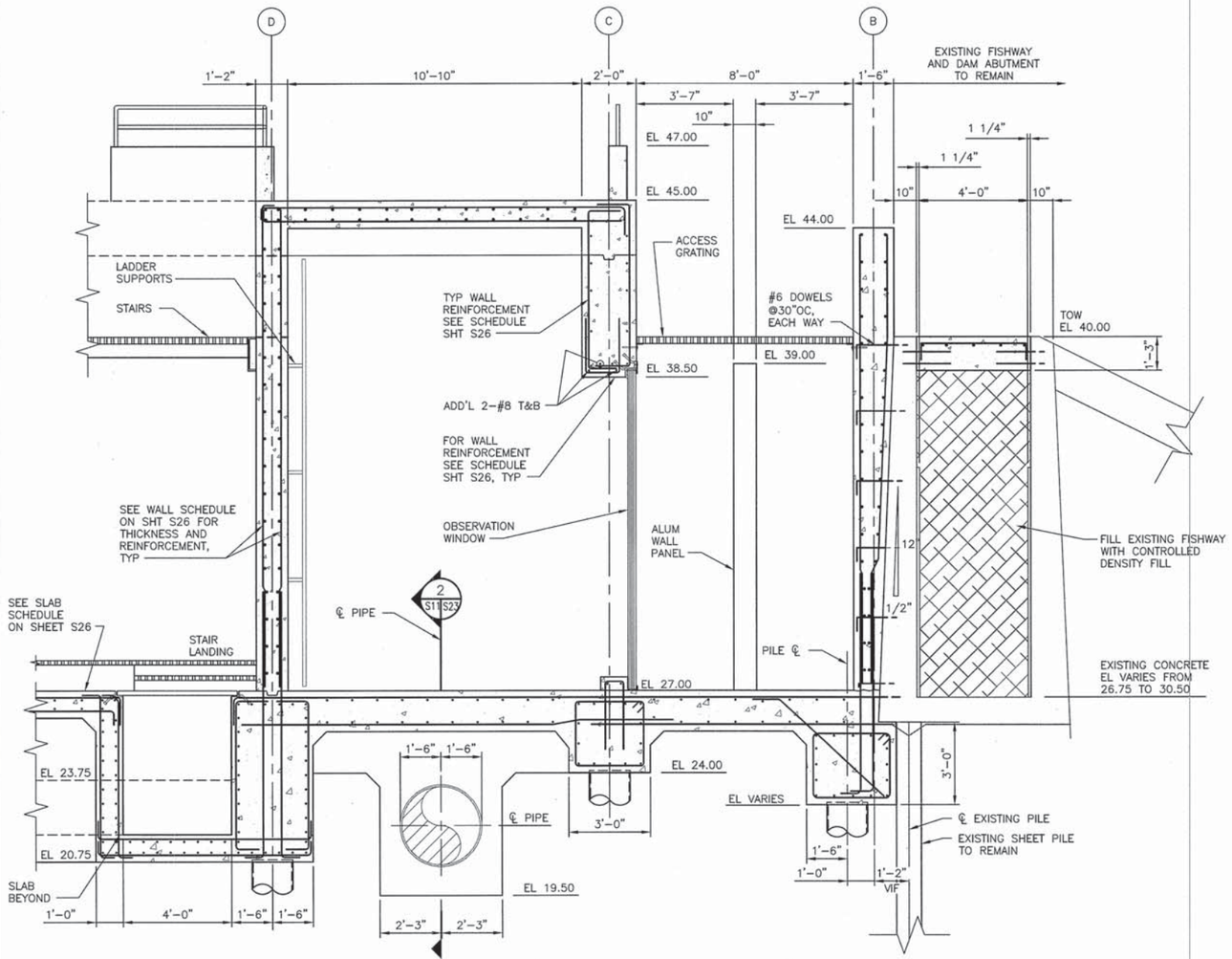

SECTION

S
S10 S23

0 2 4 8 FT

SCALE: 3/8"=1'-0"

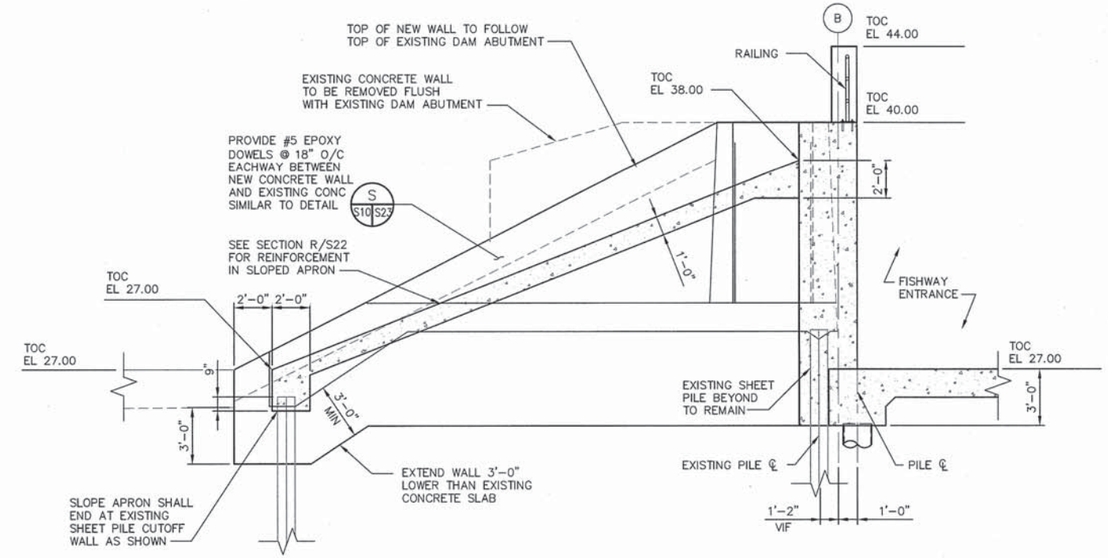

SECTION

T
S11 S23

0 4 8 12 FT

SCALE: 1/4"=1'-0"

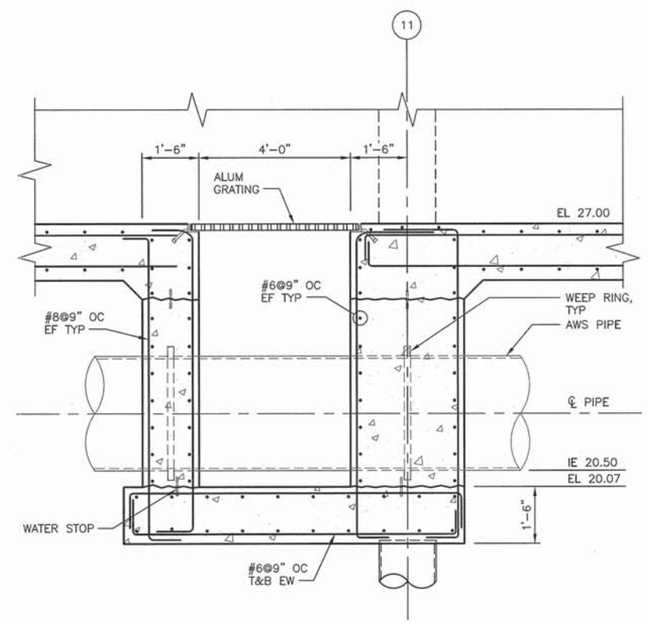

DETAIL

1
S19 S23

0 1 2 4 6 FT

SCALE: 1/2"=1'-0"

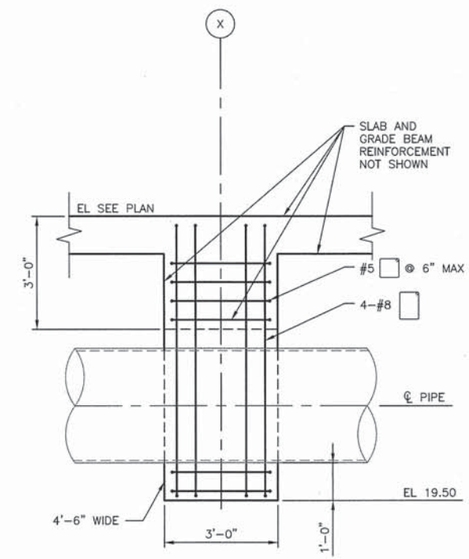

TYPICAL PIPE HANGER

2
S11 S23

0 1 2 4 6 FT

SCALE: 1/2"=1'-0"

BAR LENGTH ON ORIGINAL DRAWING EQUALS ONE INCH. ADJUST SCALE ACCORDINGLY

HDR Fisheries DESIGN CENTER

REGISTERED PROFESSIONAL ENGINEER DAVID TAVANAGH NO. 54655 EXP. 12/31/15 CIVIL STATE OF CALIFORNIA 3/18/14

NO.	DATE	REVISION	BY
A	3/17/14	ISSUED FOR BIDS	OT

SONOMA COUNTY WATER AGENCY

SCALE: AS NOTED
DATE: 3/17/14
DRAWN: JKW
REVIEWED:

Sonoma County Water Agency

Mirabel Fish Screen and Fish Ladder Replacement

STRUCTURAL SECTIONS 8

FILE NAME: 164479_s23.dwg
CONTRACT NUMBER: ####
DRAWING NUMBER: S23
SHEET 54 OF 99

C:\pwworking\sea\d0799528\164479_S23

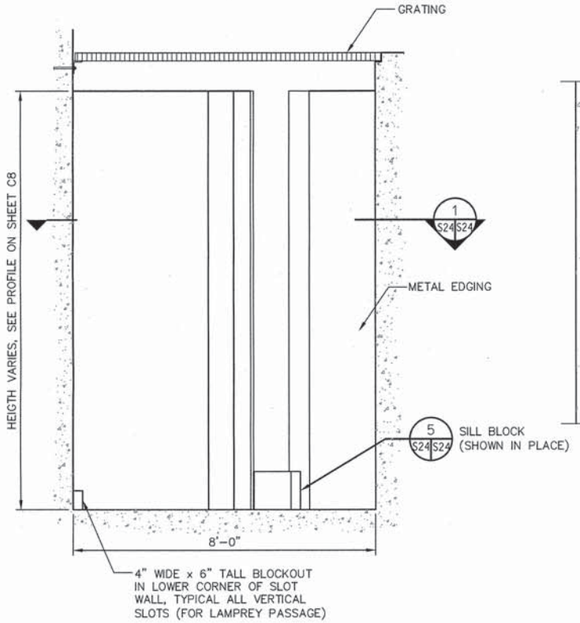

VERTICAL SLOT WALL ELEVATION

A S10 S24

0 1 2 4 6 FT

SCALE: 1/2"=1'-0"

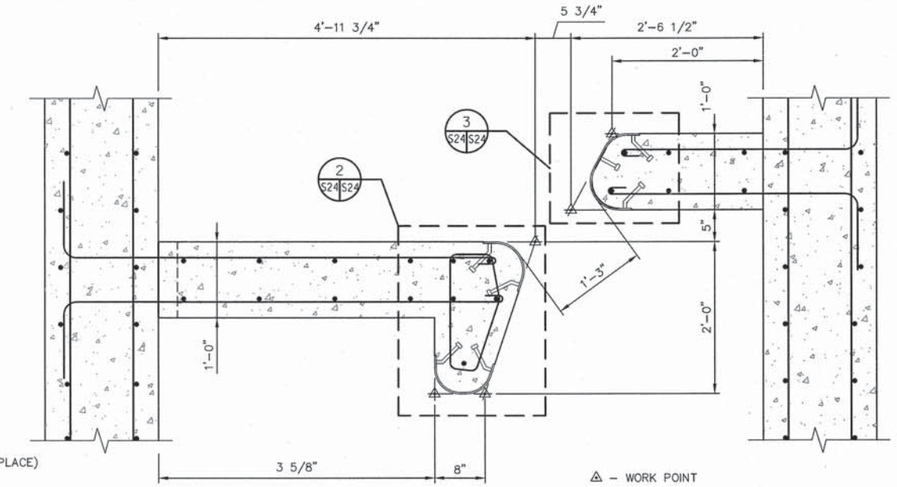

SECTION

1 S22 S24

0 1 2 3 FT

SCALE: 1"=1'-0"

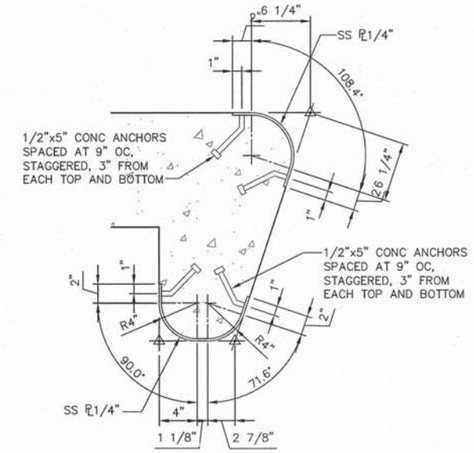

DETAIL

2 S24 S24

0 1 2 FT

SCALE: 1 1/2"=1'-0"

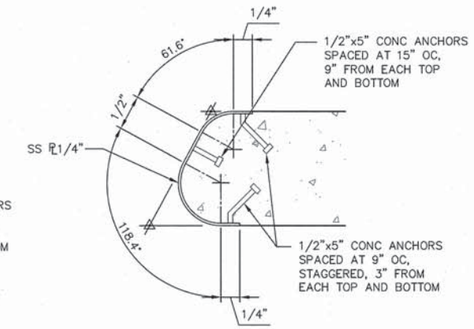

DETAIL

3 S24 S24

0 1 2 FT

SCALE: 1 1/2"=1'-0"

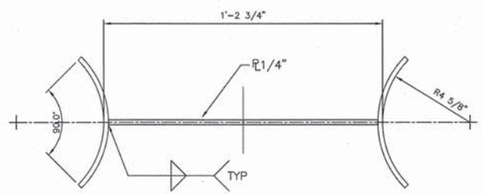

PLAN

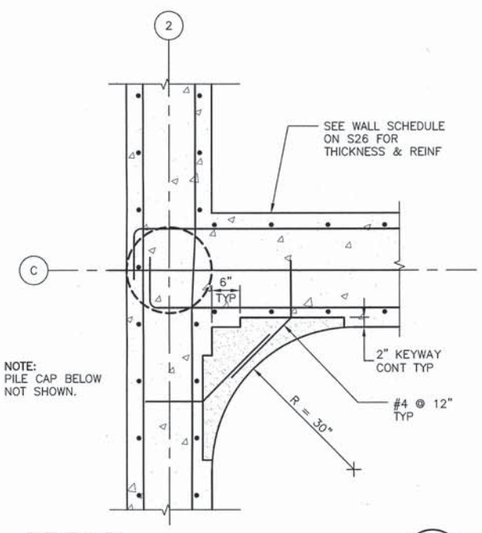

DETAIL

4 S10 S24

0 1 2 4 FT

SCALE: 3/4"=1'-0"

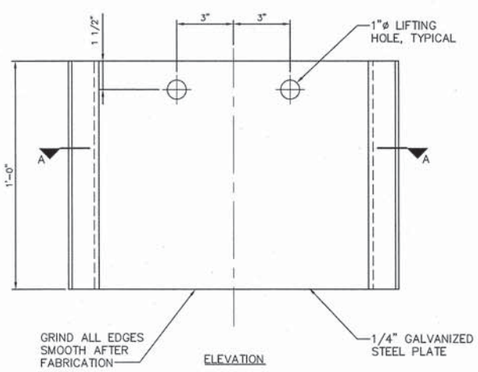

ELEVATION

DETAIL

5 S24 S24

0 1 FT

SCALE: 3"=1'-0"

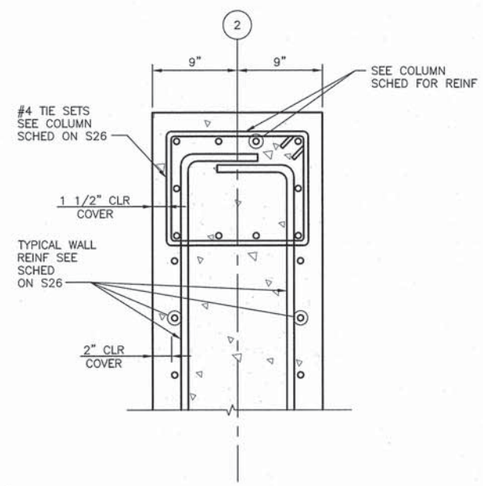

DETAIL

6 S10 S24

0 1 2 FT

SCALE: 1 1/2"=1'-0"

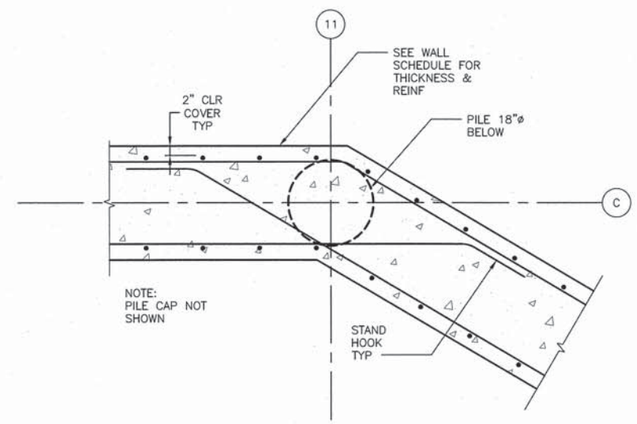

DETAIL

7 S11 S24

0 1 2 4 FT

SCALE: 3/4"=1'-0"

BAR LENGTH ON ORIGINAL DRAWING EQUALS ONE INCH. ADJUST SCALE ACCORDINGLY

HDR Fisheries DESIGN CENTER

REGISTERED PROFESSIONAL ENGINEER — OMID TAVANGAR — NO. 54655 EXP. 12/31/15 — CIVIL — STATE OF CALIFORNIA — 3/18/14

NO.	DATE	REVISION	BY
A	3/17/14	ISSUED FOR BIDS	OT

SONOMA COUNTY WATER AGENCY

SCALE: AS NOTED | DATE: 3/17/14
DRAWN: ACB
REVIEWED:

Sonoma County Water Agency

Mirabel Fish Screen and Fish Ladder Replacement

SECTIONS AND DETAILS 1

FILE NAME: 164479_s24.dwg
CONTRACT NUMBER: ####
DRAWING NUMBER: S24
SHEET 55 OF 99

C:\pwworking\sec\d0799528\164479_S24.dwg, 3/17/2014 10:34:40 AM, swarner

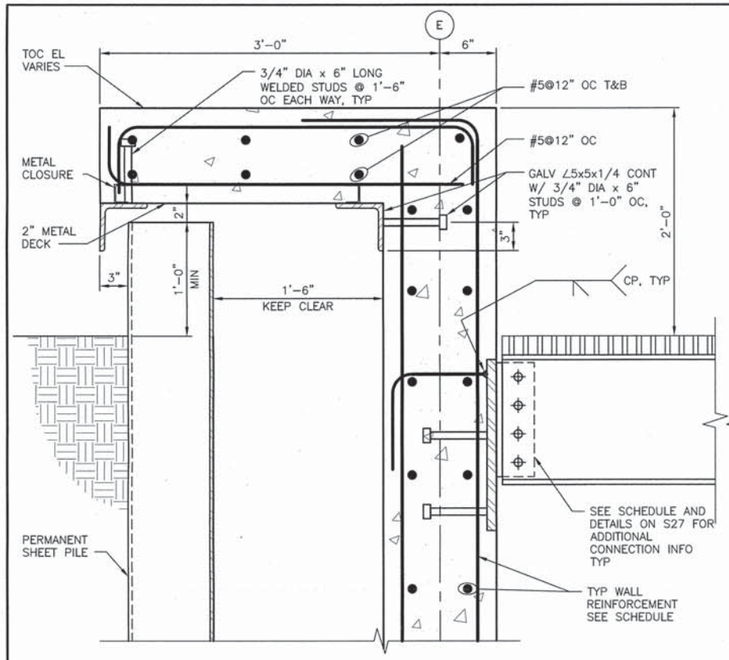

DETAIL 1 S12 S25

0 1 2 FT

SCALE: 1 1/2"=1'-0"

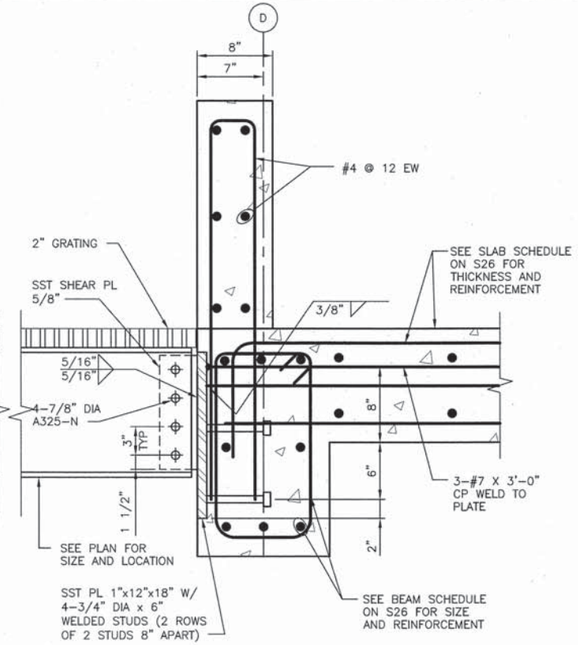

DETAIL 2 S12 S25

0 1 2 FT

SCALE: 1 1/2"=1'-0"

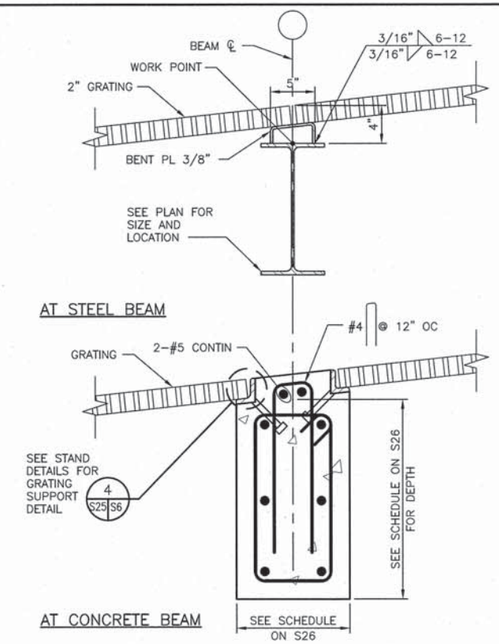

DETAIL 3 S12 S25

0 1 2 FT

SCALE: 1 1/2"=1'-0"

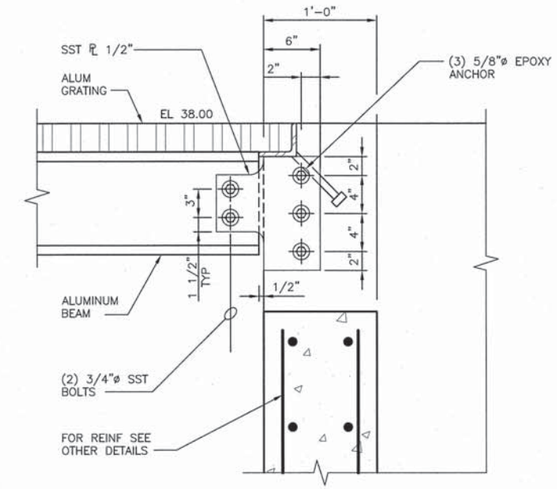

ALUM BEAM SUPPORT 4 S12 S25

0 1 2 FT

SCALE: 1 1/2"=1'-0"

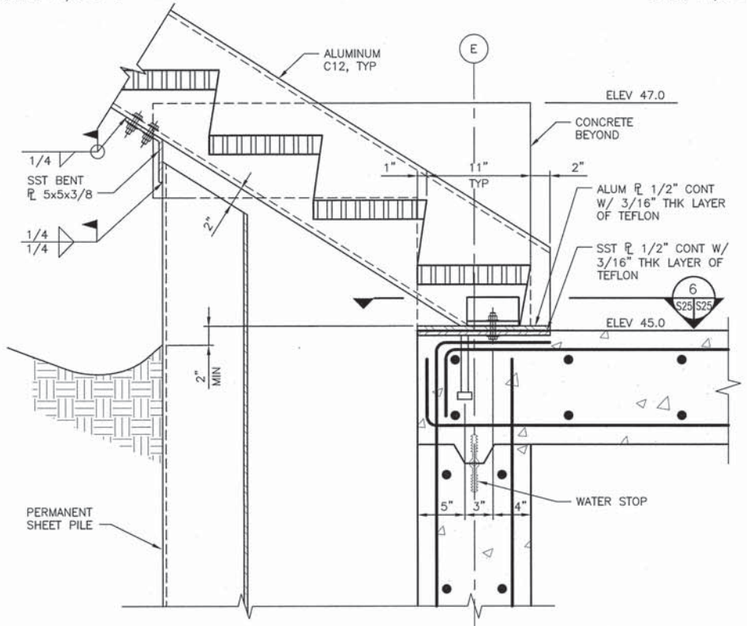

DETAIL 5 S18 S25

0 1 2 FT

SCALE: 1 1/2"=1'-0"

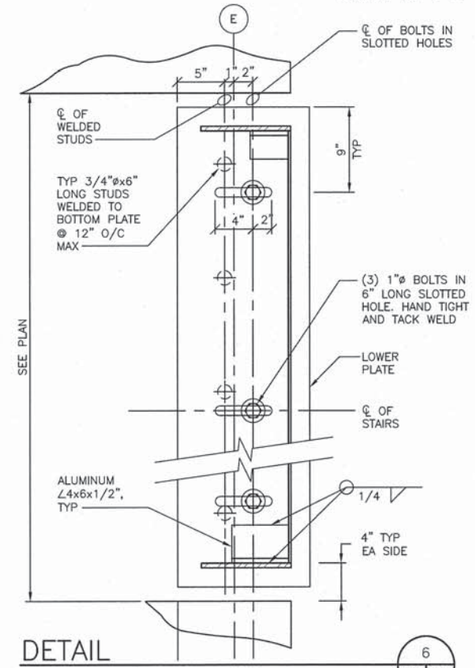

DETAIL 6 S25 S25

0 1 2 FT

SCALE: 1 1/2"=1'-0"

REGISTERED PROFESSIONAL ENGINEER
CHRISTOPHER A. LAVANGAR
NO. 54655
EXP. 12/31/15
CIVIL
STATE OF CALIFORNIA
3/18/14

BAR LENGTH ON ORIGINAL DRAWING EQUALS ONE INCH. ADJUST SCALE ACCORDINGLY

HDR Fisheries DESIGN CENTER

C:\pwworking\sea\d0799528\164479_S25

NO.	DATE	REVISION	BY
A	3/17/14	ISSUED FOR BIDS	OT

SONOMA COUNTY WATER AGENCY

SCALE: AS NOTED
DATE: 3/17/14
DRAWN: JKW
REVIEWED:

Sonoma County Water Agency

Mirabel Fish Screen and Fish Ladder Replacement

SECTIONS AND DETAILS 2

FILE NAME: 164479_s25.dwg
CONTRACT NUMBER: ####
DRAWING NUMBER: S25
SHEET 56 OF 99

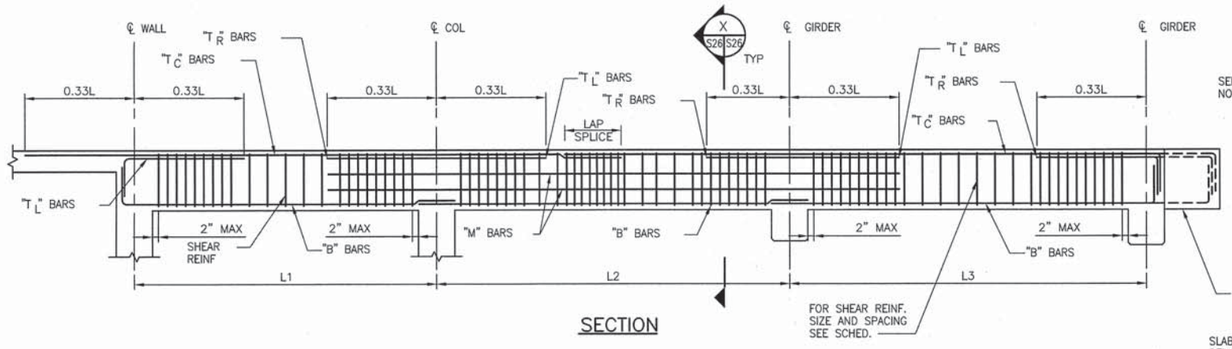

SECTION

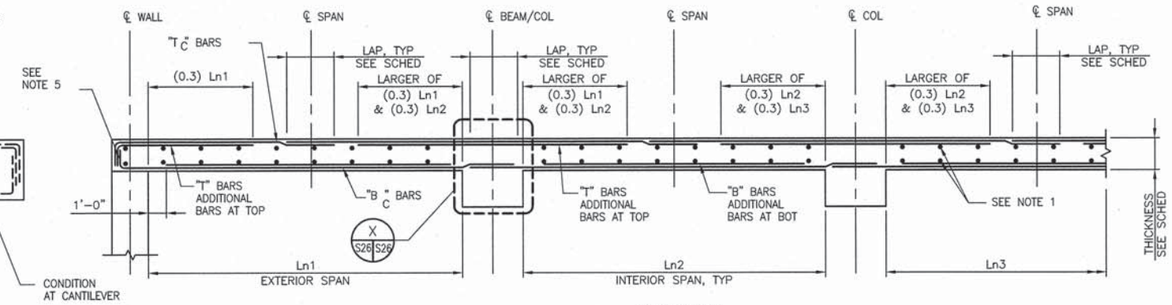

SECTION

CONCRETE BEAM SCHEDULE											f'c=4500 psi
BEAM MARK SEE PLANS	SIZE		TOP REINFORCEMENT			MIDDLE REINF "M"	BOTT REINF "B"	SHEAR REINFORCEMENT			REMARKS
			LEFT	CENTER	RIGHT						
	"W" (INCH)	"D" (INCH)	"TL"	"TC"	"TR"			NO. SIZE	SPACING (INCH)	TYPE	
B-1	12	24	–	2#7	–	2#5	2#8	#4	10	TS1	–
B-2	14	26	–	2#7	–	2#5	2#7	#4	10	TS1	–
B-3	12	24	–	2#6	–	2#5	2#6	#4	10	TS1	–
B-4	10	18	–	2#6	–	2#5	2#6	#3	10	TS1	–
B-5	18	24	1#9	2#9	1#9	2#5	3#11	#4	10	TS3	–
B-6	12	24	–	2#8	–	2#5	2#9	#4	10	TS1	–
B-7	12	14	–	2#5	–	–	2#5	#3	6	TSI	–
GRADE BEAM	36	36	–	5#8	–	4#5	5#8	#4	12	TS3	–

TYPICAL CONCRETE BEAM REINFORCING DETAIL AND SCHEDULE

CONC. BEAM NOTES:

1. SLAB REINFORCEMENT NOT SHOWN FOR CLARITY.
2. THE TOP REINFORCEMENT OF TWO ADJACENT BEAMS AT THE COMMON END WILL BE GOVERNED BY THE LARGER OF THE TWO.
3. "M" BARS SCHEDULED ARE TOTAL REQUIRED. PROVIDE 1/2 OF "M" BARS EACH SIDE OF BEAM.
4. ALL LONGITUDINAL BARS SHALL BE CONTIN WITH STAND HOOK AT ENDS.
5. TOP AND BOTTOM BARS SHALL BE CONTINUOUS FROM PUMP STATION WALL TO CANTILEVER. BEAM END NEAR FILTRATION BUILDING.

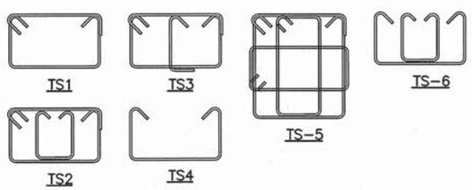

TYPICAL STIRRUP DETAIL

TYPICAL WALL REINFORCEMENT SCHEDULE				
WALL MARK	THICK (INCHES)	VERTICAL BARS	HORIZONTAL BARS	REMARKS
W-1	12	#7@9 O.F. #6@9 I.F.	#5@9 E.F.	–
W-2	14	#5@9 E.F.	#5@9 E.F.	–
W-3	18	#5@9 E.F.	#5@9 E.F.	–
W-4	24	#6@9 E.F.	#6@9 E.F.	–
W-5	18	#6@9 E.F.	#6@9 E.F.	–
W-6	12	#5@9 E.F.	#5@9 E.F.	#6@9" DOWELS @ EXT FACE. W/5'-0" LAP
W-7	10	#6@9 E.F.	#5@12 E.F.	–
W-8	12	#7@9 E.F.	#7@9 E.F.	–

TYPICAL WALL REINFORCEMENT KEY PLAN AND SCHEDULE

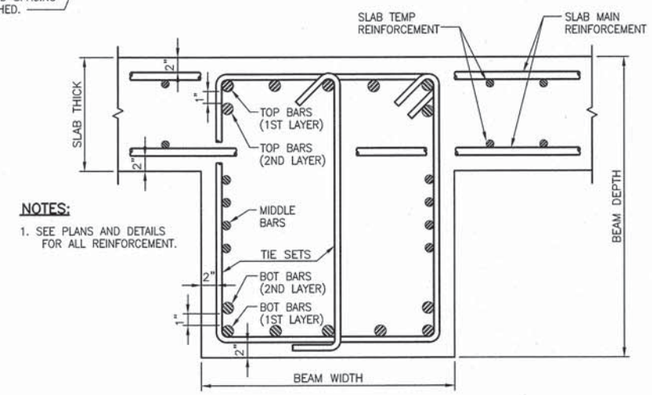

NOTES:

1. SEE PLANS AND DETAILS FOR ALL REINFORCEMENT.

TYPICAL BAR PLACEMENT DETAIL

CONCRETE SLAB SCHEDULE								f'c=4500 psi
SLAB MARK SEE PLANS		TOP REINFORCEMENT			BOTTOM REINFORCEMENT		TEMPERATURE REINFORCEMENT TOP & BOTTOM	REMARKS
		CONTIN	ADDITIONAL		CONTIN	ADDITIONAL		
	THICK (INCH)	"Tc"	"T" EXTERIOR SUPPORT	"T" INTERIOR SUPPORT	"Bc"	"B"		
S-1	12	#5@9	–	–	#7@9	–	#7@9 @ BOTTOM #5@9 @ TOP	–
S-2	18	#6@9	–	–	#6@9	–	#6@9 T&B	–
S-3	12	#5@9	–	–	#5@9	–	#5@9 T&B	–
S-4	12	#6@18	#6@18	#6@18	#8@18	#8@18	#5@9 T&B	–
S-5	NOT	USED	–	–	–	–	–	–
S-6	NOT	USED	–	–	–	–	–	–
S-7	NOT	USED	–	–	–	–	–	–

TYPICAL ONE-WAY SLAB REINFORCING DETAIL AND SCHEDULE

CONC. SLAB NOTES:

1. TRANSVERSE BARS (TEMPERATURE REINFORCEMENT)
2. ALL BARS AND CONTINUOUS BARS SHALL BE IN THE SAME PLANE UNLESS NOTED OTHERWISE.
3. IN PLACEMENT OF REINFORCING, "Tc" & "T" BARS AND "Bc" & "B" BARS SHALL BE ALTERNATED TO ACHIEVE UNIFORM DISTRIBUTION AND SPACING.
4. THE LARGER QUANTITY OF "T" BARS FOR TWO ADJACENT SLAB MARKS WILL GOVERN THE "T" BARS FOR BOTH SLABS.
5. HOOK BOTTOM BARS AT EXTERIOR SUPPORTS.

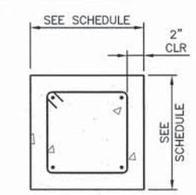

COLUMN TYPE A

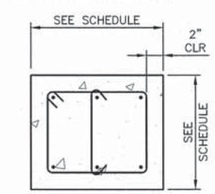

COLUMN TYPE B

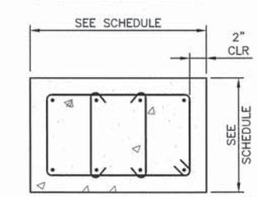

COLUMN TYPE C

CONCRETE COLUMN SCHEDULE					
LATERAL TIES	ZONE B	#4@6	#4@6	#4@6	#4@6
	ZONE A	#4@3	#4@3	#4@6	#4@6
VERTICAL BARS		4#9	6#9	4-#6	8-#6
COLUMN SIZE		14"x14"	18"x14"	12"x12"	12"x24"
DETAIL (COLUMN TYPE)		A	B	A	C
MARK		C-1	C-2	C-3	C-4

NOTES:

1. ALL FOOTING AND SLAB DOWELS SHALL MATCH WALL VERTICAL REINF. UNO.
2. CONCRETE STRENGTH f'c=4.5 KSI
3. SEE COLUMN SCHEDULE FOR TIE SPACING

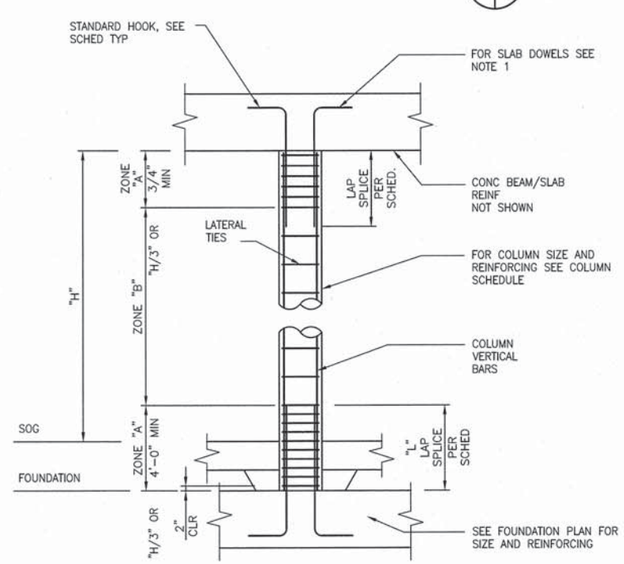

TYPICAL COLUMN DETAIL

BAR LENGTH ON ORIGINAL DRAWING EQUALS ONE INCH. ADJUST SCALE ACCORDINGLY

HDR Fisheries DESIGN CENTER

REGISTERED PROFESSIONAL ENGINEER DAVID A. TAVANGAR NO. 54655 EXP. 12/31/15 CIVIL STATE OF CALIFORNIA 3/18/14

NO.	DATE	REVISION	BY
A	3/17/14	ISSUED FOR BIDS	OT

SONOMA COUNTY WATER AGENCY

SCALE: AS NOTED | DATE: 3/17/14
DRAWN: JKW
REVIEWED:

Sonoma County Water Agency
Mirabel Fish Screen and Fish Ladder Replacement
BEAM, SLAB AND COLUMN DETAILS

FILE NAME: 164479_s26.dwg
CONTRACT NUMBER: ####
DRAWING NUMBER: S26
SHEET 57 OF 99

C:\pwworking\sea\d0799526\164479_S26.dwg, 3/17/2014 9:12:27 PM, jamrhea

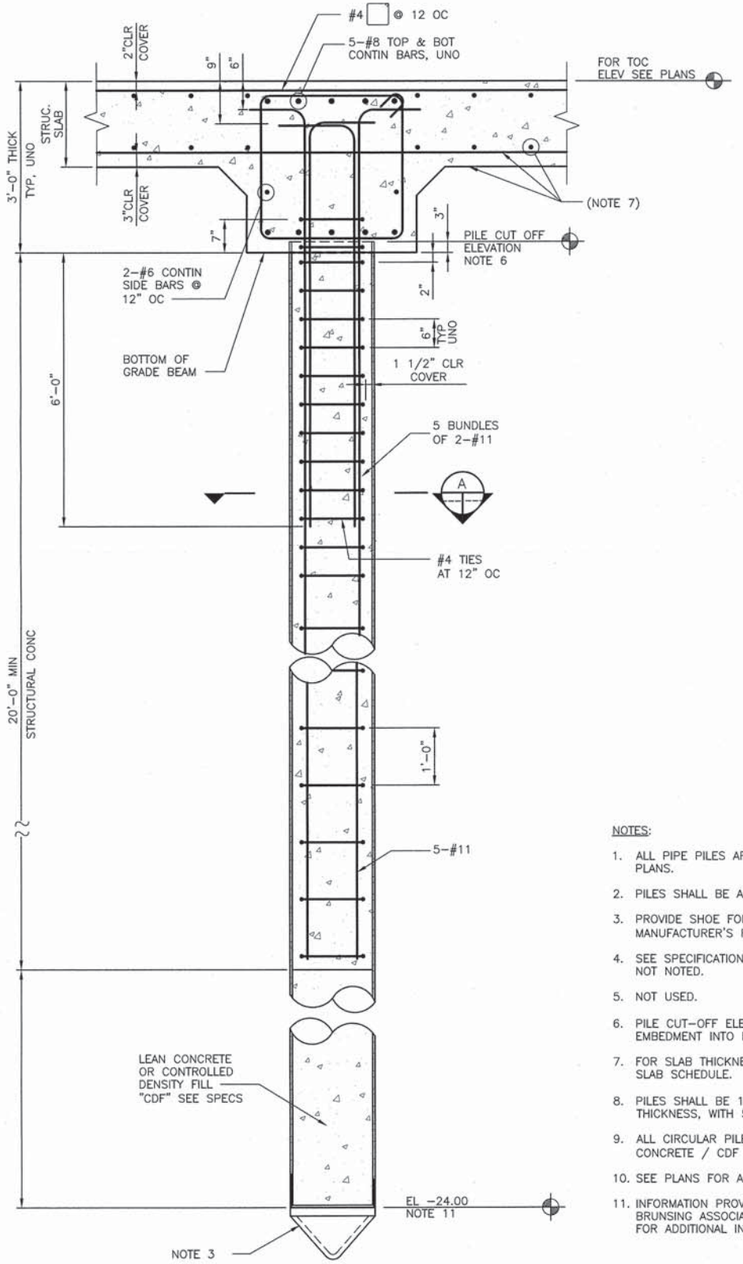

TYPICAL PILE DETAIL

NTS

NOTES:

1. ALL PIPE PILES ARE NOTED THUS P-X ON FOUNDATION PLANS.
2. PILES SHALL BE ASTM A 252 GRADE 3 WITH FY=50 KSI.
3. PROVIDE SHOE FOR CLOSED-ENDED PILE DRIVING PER MANUFACTURER'S RECOMMENDATION.
4. SEE SPECIFICATION SECTION 02315 FOR ALL INFORMATION NOT NOTED.
5. NOT USED.
6. PILE CUT-OFF ELEVATION SHALL ALLOW 3" OF PILE EMBEDMENT INTO BOTTOM OF THE GRADE BEAM.
7. FOR SLAB THICKNESS AND REINFORCING SEE PLANS AND SLAB SCHEDULE.
8. PILES SHALL BE 18" IN (INSIDE) DIAMETER X 3/8" MIN. THICKNESS, WITH 50 KSI YIELD STRENGTH.
9. ALL CIRCULAR PILES SHALL BE FILLED WITH STRUCTURAL CONCRETE / CDF PER TYPICAL PILE DETAIL.
10. SEE PLANS FOR ALL TOP OF CONCRETE ELEVATIONS.
11. INFORMATION PROVIDED IS FROM GEOTECHNICAL REPORT BY BRUNSING ASSOCIATES INC. SEE NOTE G11 ON SHEET S1 FOR ADDITIONAL INFORMATION.

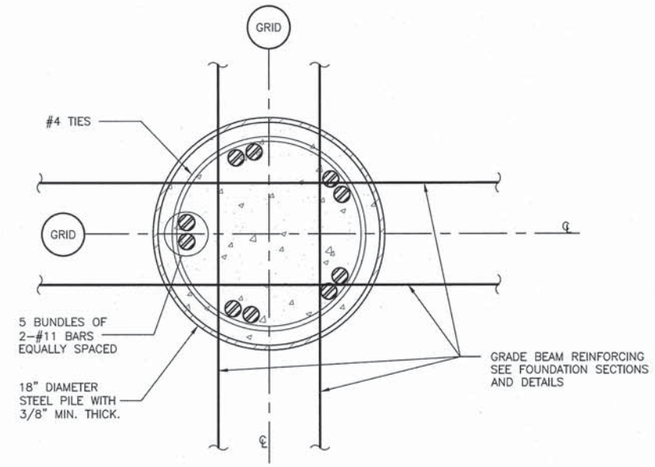

SECTION A-A

NTS

ALUMINUM BEAM SCHEDULE 6061-T6								
MARK	SECTION TYPE	"B" (IN)	"D" (IN)	"T_t" (IN)	"T_w" (IN)	WEIGHT lb/ft	CONN BOLTS	REMARKS
ALB-1	TYPE-1	7.0	12	0.47	0.29	14.3	3	-
ALB-2	TYPE-1	6.0	10	0.50	0.29	10.3	2	-

NOTES:

1. DIMENSIONS SHOWN ARE MINIMUM.
2. ALL CONNECTIONS SHALL BE WITH 3/4"ø SST BOLTS WITH 2 3/4" MIN SPACING.

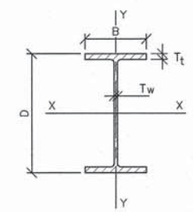

TYPE-1

NTS

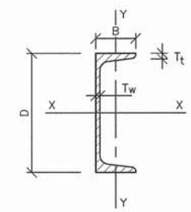

TYPE-2

NTS

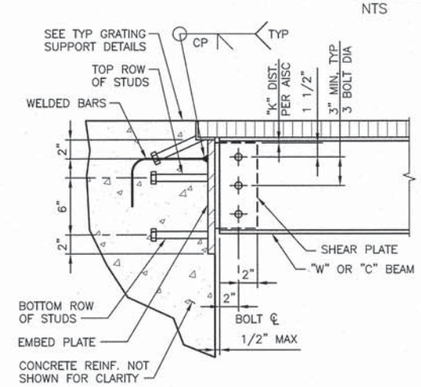

BEAM	BOLTS [3]	SHEAR PLATE	EMBED PLATE	WELDED BARS A706 [2]	STUDS [1]	
					TOP ROW	BOT ROW
W12	(3)-3/4"ø	1/2"	PL 3/4"x12"x1'-2"	2-#7	(2)	(2)
W10	(3)-3/4"ø	1/2"	PL 3/4"x12"x1'-2"	2-#7	(2)	(2)
W8	(2)-3/4"ø	3/8"	PL 5/8"x12"x1'-0"	2-#6	-	(2)
C8	(2)-3/4"ø	3/8"	PL 5/8"x12"x1'-0"	2-#6	-	(2)

NOTES:

1. STUDS ARE 3/4"øx6" LONG.
2. REBAR SHALL BE COMPLETE-PEN WELDED TO PLATE.
3. BOLTS ARE ALL STAINLESS STEEL 316.

BEAM TO CONCRETE CONNECTION

1 / -/-

BAR LENGTH ON ORIGINAL DRAWING EQUALS ONE INCH. ADJUST SCALE ACCORDINGLY

HDR Fisheries DESIGN CENTER

REGISTERED PROFESSIONAL ENGINEER DAVID TAVANGAR NO. 54655 EXP. 12/31/15 CIVIL STATE OF CALIFORNIA 3/18/14

NO.	DATE	REVISION	BY
A	3/17/14	ISSUED FOR BIDS	OT

SONOMA COUNTY WATER AGENCY

SCALE: AS NOTED | DATE: 3/17/14
DRAWN: ACB
REVIEWED:

Sonoma County Water Agency
Mirabel Fish Screen and Fish Ladder Replacement
PILE SCHEDULE AND DETAILS

FILE NAME: 164479_s27.dwg
CONTRACT NUMBER: ####
DRAWING NUMBER: S27
SHEET 58 OF 99

C:\pwworking\sea\d0799528\164479_S27

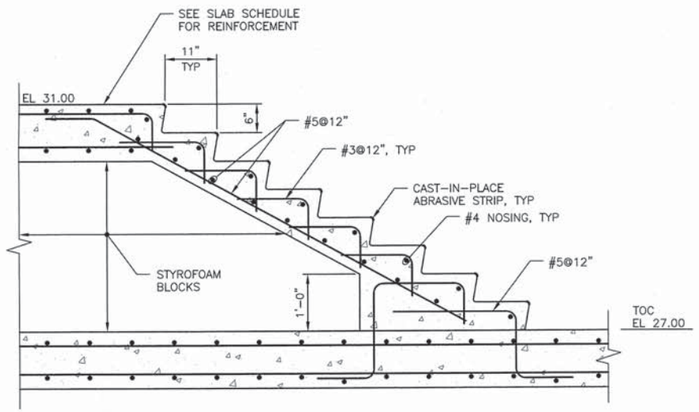

SECTION AT STAIR

1 / S19 S28

0 1 2 4 FT

SCALE: 3/4"=1'-0"

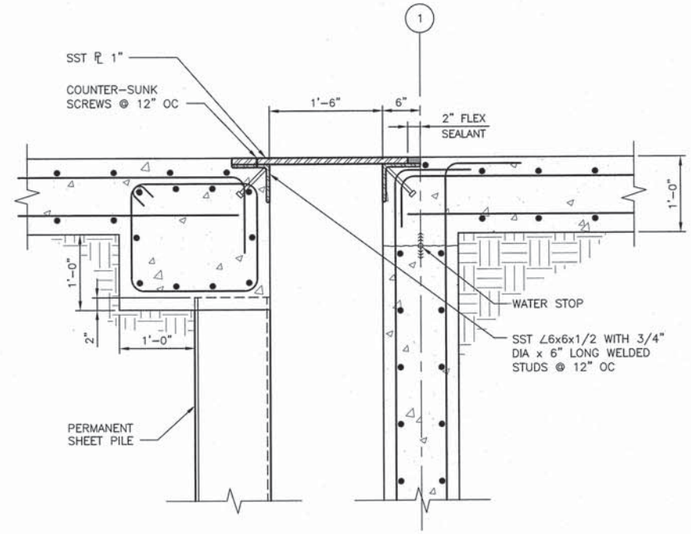

DETAIL

2 / S19 S28

0 1 2 3 FT

SCALE: 1"=1'-0"

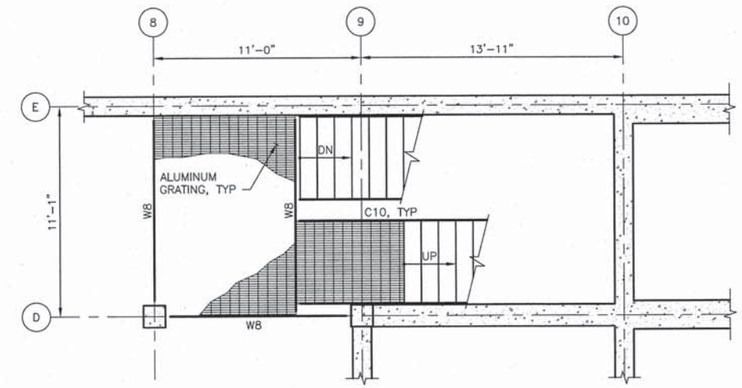

NOTE:

SEE DEFERRED APPROVAL NOTES ON SHEET S1.

PLAN @ STAIR INTERMEDIATE LANDING

3 / S12 S28

0 4 8 12 FT

SCALE: 1/4"=1'-0"

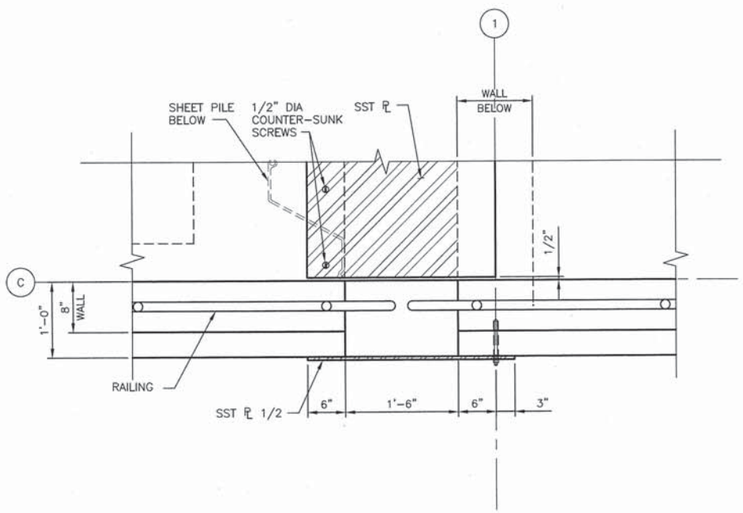

DETAIL

4 / S12 S28

0 1 2 3 FT

SCALE: 1"=1'-0"

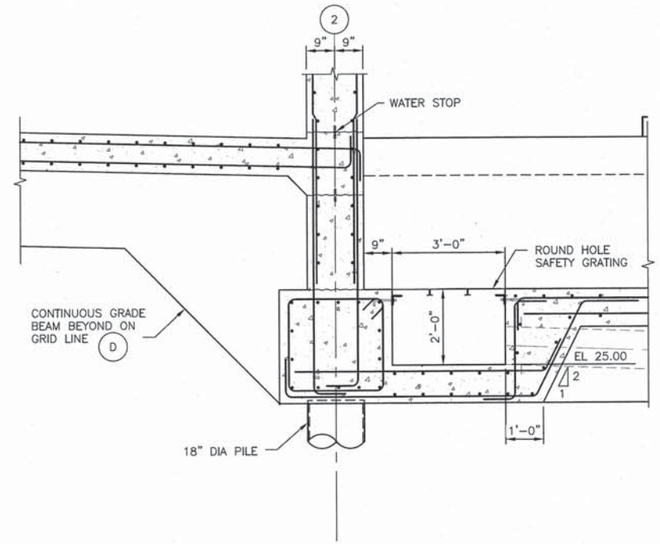

SECTION AT SUMP

5 / S19 S28

0 1 2 4 6 FT

SCALE: 1/2"=1'-0"

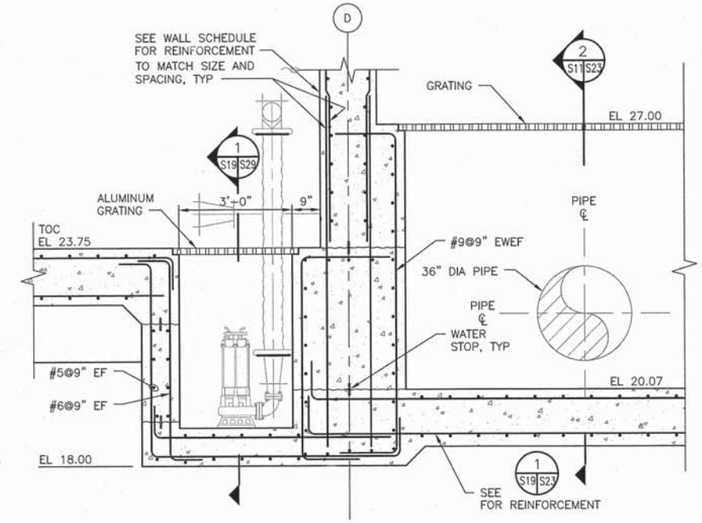

SECTION

V / S10 S28

0 1 2 4 6 FT

SCALE: 1/2"=1'-0"

BAR LENGTH ON ORIGINAL DRAWING EQUALS ONE INCH. ADJUST SCALE ACCORDINGLY

HDR Fisheries DESIGN CENTER

REGISTERED PROFESSIONAL ENGINEER — OMID TAVANGAR — NO. 54655 — EXP. 12/31/15 — CIVIL — STATE OF CALIFORNIA — 3/18/14

NO.	DATE	REVISION	BY
A	3/17/14	ISSUED FOR BIDS	OT

SONOMA COUNTY WATER AGENCY

SCALE: AS NOTED | DATE: 3/17/14
DRAWN: JKW
REVIEWED:

Sonoma County Water Agency

Mirabel Fish Screen and Fish Ladder Replacement
SECTIONS AND DETAILS 3

FILE NAME: 164479_s28.dwg
CONTRACT NUMBER: ####
DRAWING NUMBER: S28
SHEET 59 OF 99

C:\pwworking\sea\d0795528\164479_S28

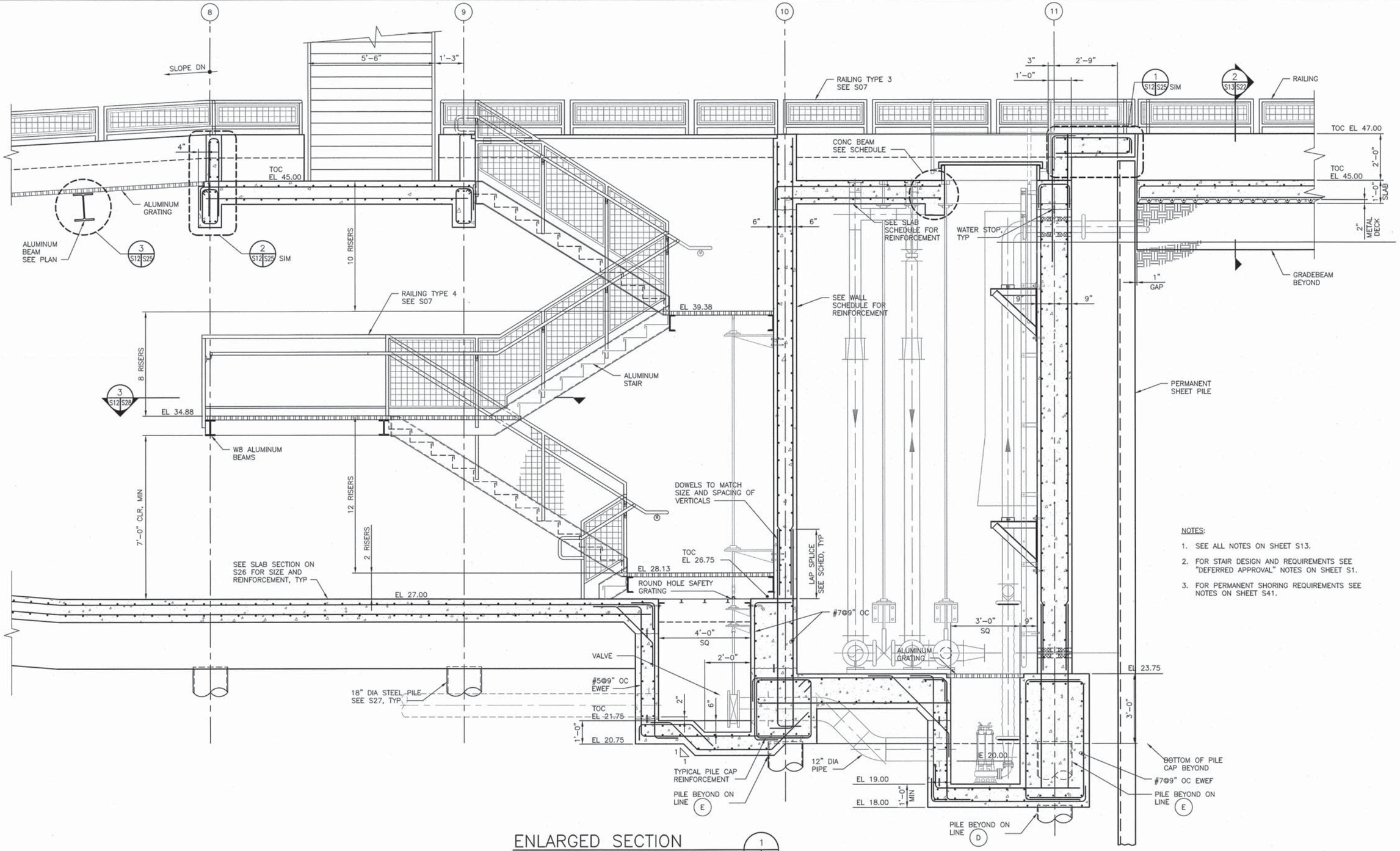

NOTES:

1. SEE ALL NOTES ON SHEET S13.
2. FOR STAIR DESIGN AND REQUIREMENTS SEE "DEFERRED APPROVAL" NOTES ON SHEET S1.
3. FOR PERMANENT SHORING REQUIREMENTS SEE NOTES ON SHEET S41.

ENLARGED SECTION

1 S19 S29

0 1 2 4 6 FT

SCALE: 1/2"=1'-0"

BAR LENGTH ON ORIGINAL DRAWING EQUALS ONE INCH. ADJUST SCALE ACCORDINGLY

HDR Fisheries DESIGN CENTER

REGISTERED PROFESSIONAL ENGINEER
OMID TAVANGAR
NO. 54655
EXP. 12/31/15
CIVIL
STATE OF CALIFORNIA
3/18/14

NO.	DATE	REVISION	BY
A	3/17/14	ISSUED FOR BIDS	OT

SONOMA COUNTY WATER AGENCY

SCALE: AS NOTED
DATE: 3/17/14
DRAWN: JKW
REVIEWED:

Sonoma County Water Agency

Mirabel Fish Screen and Fish Ladder Replacement

SECTIONS AND DETAILS 4

FILE NAME: 164479_s29.dwg
CONTRACT NUMBER: ####
DRAWING NUMBER: S29
SHEET 60 OF 99

C:\pwworking\sea\d0799528\164479_S29.dwg

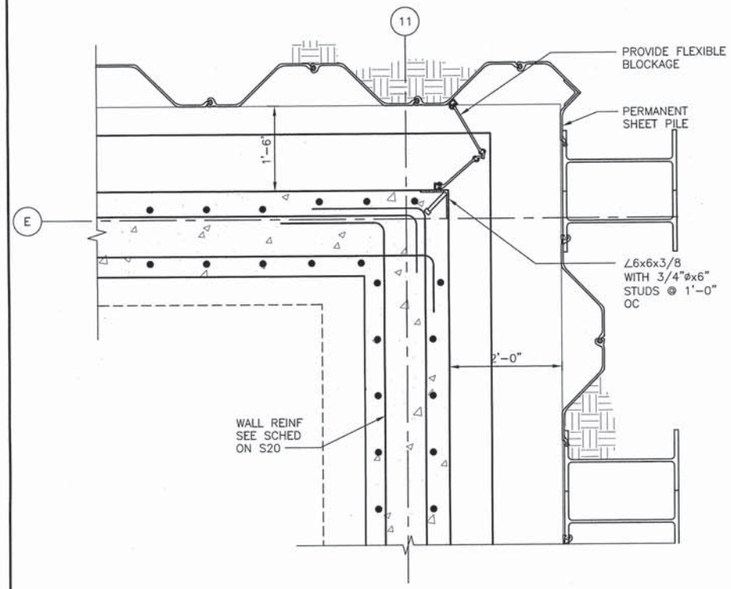

DETAIL 1 (S11 | S30)

0 1 2 4 FT

SCALE: 3/4"=1'-0"

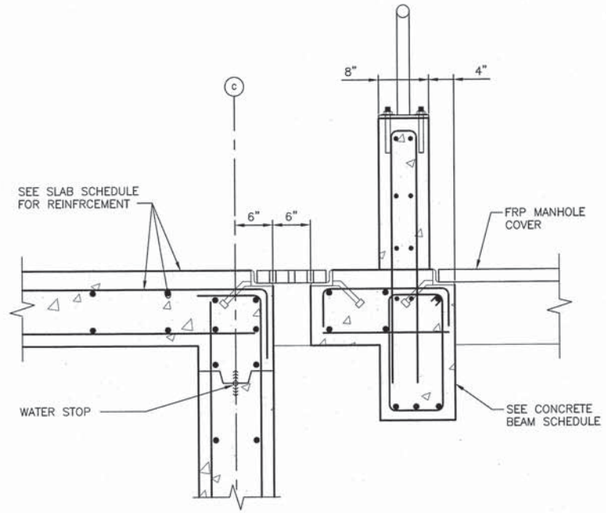

DETAIL 2 (S22 | S30)

0 1 2 3 FT

SCALE: 1"=1'-0"

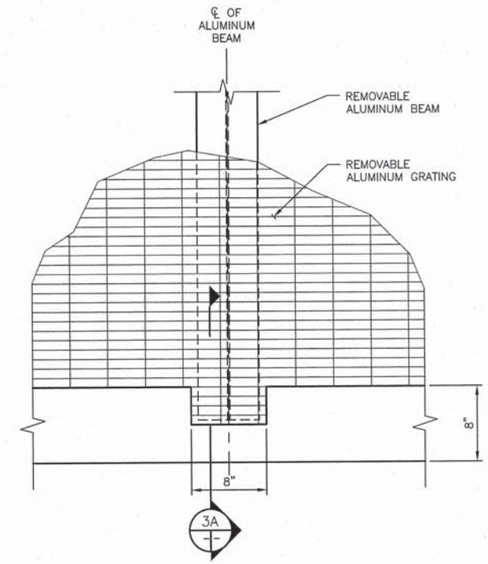

STAIR TOP COVER DETAIL 3 (S12 | S30)

0 1 2 FT

SCALE: 1 1/2"=1'-0"

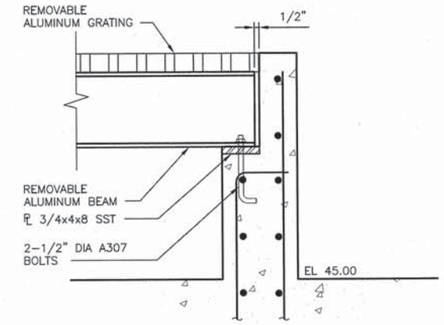

DETAIL AT POCKET 3A

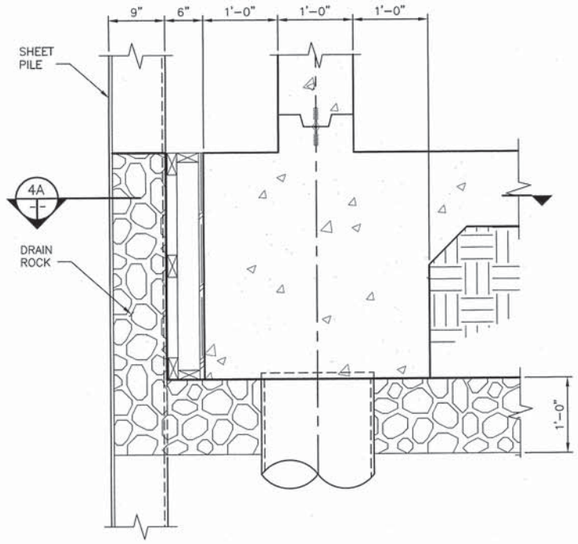

DETAIL 4 (S17 | S30)

0 1 2 3 FT

SCALE: 1"=1'-0"

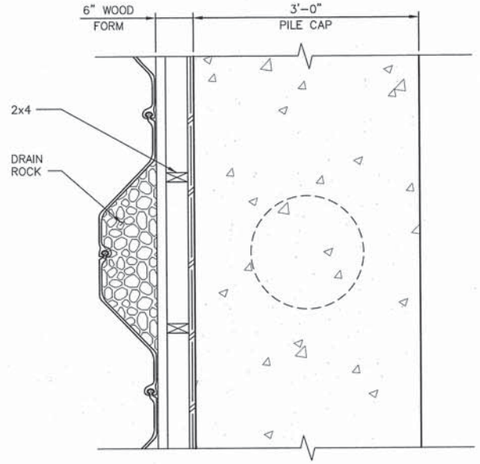

DETAIL 4A

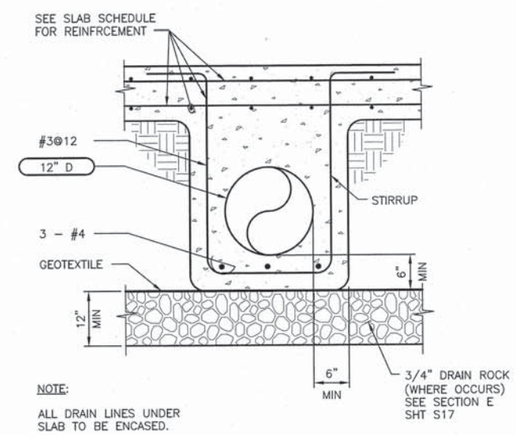

NOTE:

ALL DRAIN LINES UNDER SLAB TO BE ENCASED.

UNDERSLAB PIPING ENCASEMENT 5 (S17 | S30)

SCALE: NTS

BAR LENGTH ON ORIGINAL DRAWING EQUALS ONE INCH. ADJUST SCALE ACCORDINGLY

HDR Fisheries DESIGN CENTER

REGISTERED PROFESSIONAL ENGINEER CAMILO TAMANAHA NO. 54655 EXP. 12/31/15 CIVIL STATE OF CALIFORNIA 3/18/14

NO.	DATE	REVISION	BY
A	3/17/14	ISSUED FOR BIDS	OT

SONOMA COUNTY WATER AGENCY

SCALE: AS NOTED | DATE: 3/17/14

DRAWN: JKW

REVIEWED: Kent Gylle

Sonoma County Water Agency

Mirabel Fish Screen and Fish Ladder Replacement

SECTIONS AND DETAILS 5

FILE NAME: 164479_s30.dwg

CONTRACT NUMBER: ####

DRAWING NUMBER: S30

SHEET 61 OF 99

C:\pwworking\sea\d0799528\164479_S30

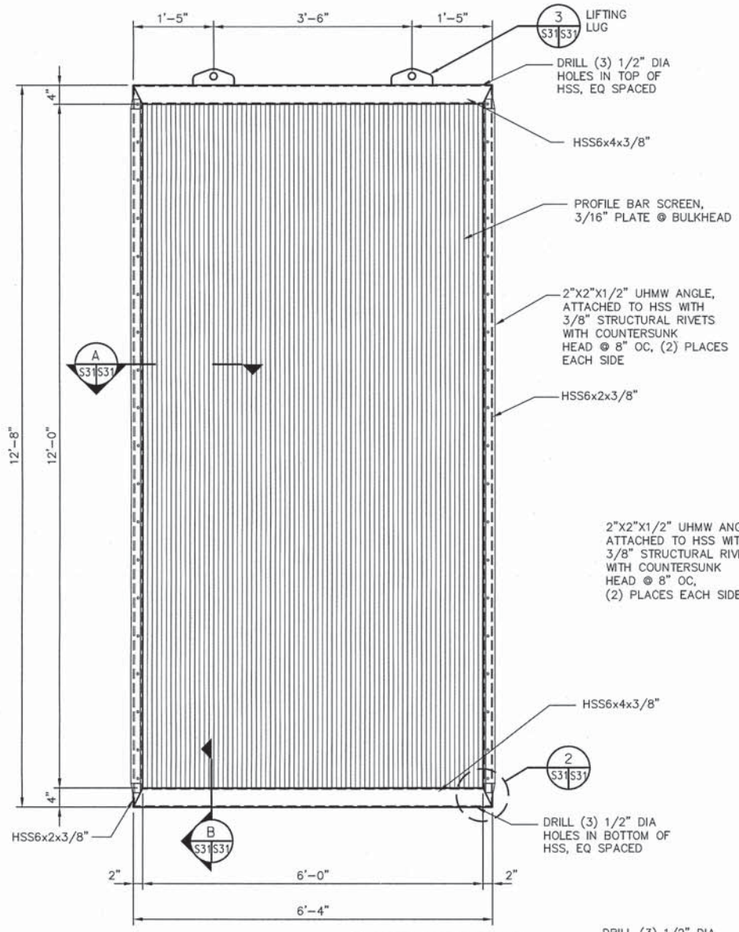

(7) SCREEN ASSEMBLIES AND (6) BULKHEAD ASSMBLIES REQUIRED

INTAKE SCREEN

1 S13 S31

0 1 2 4 FT

SCALE: 3/4"=1'-0"

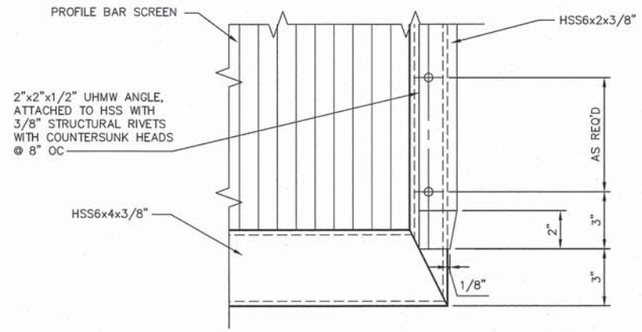

DETAIL

2 S31 S31

0 1 FT

SCALE: 3"=1'-0"

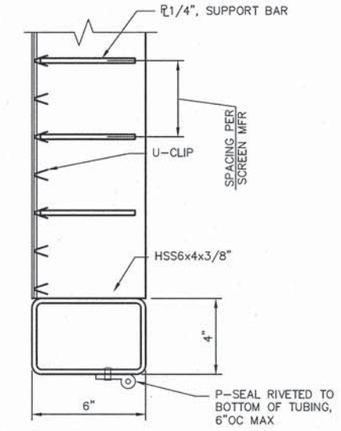

SECTION

B S31 S31

0 1 FT

SCALE: 3"=1'-0"

NOTES:

1. (7) SCREEN ASSEMBLIES REQUIRED.
2. ALL MATERIAL SHALL BE STAINLESS STEEL
3. SCREEN ASSEMBLY SHALL BE FULLY WELDED USING 1/4" FILLET OR FULL PEN WELDS AS REQUIRED BY SCREEN MANUFACTURER.
4. ALL EDGES SHALL BE FREE OF ALL BURRS AND SHARP EDGES.
5. (6) BULKHEAD ASSEMBLIES REQUIRED.

SCREEN NOTES:

1. SCREEN SHALL BE PROFILE BAR SCREEN WITH 1.75 MM OPENINGS AND EFFECTIVE OPEN AREA GREATER THAN 27%.
2. SCREEN SHALL BE CAPABLE OF WITHSTANDING 10 FEET OF SUBMERGENCE AT 100% BLINDING.

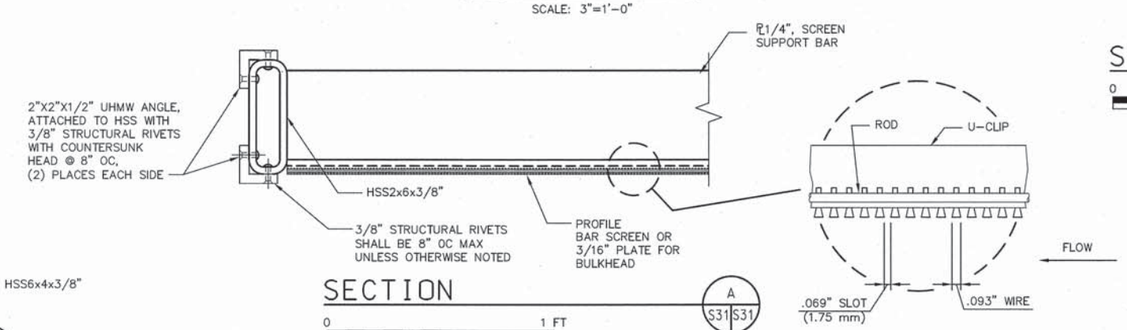

SECTION

A S31 S31

0 1 FT

SCALE: 3"=1'-0"

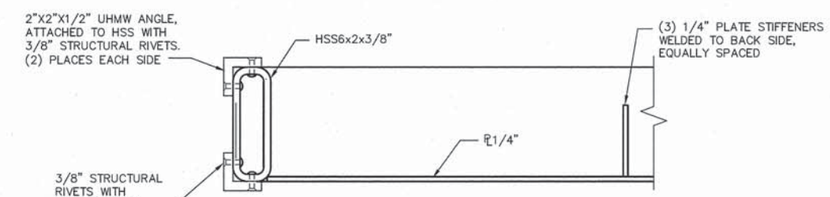

SECTION

C S31 S31

0 1 FT

SCALE: 3"=1'-0"

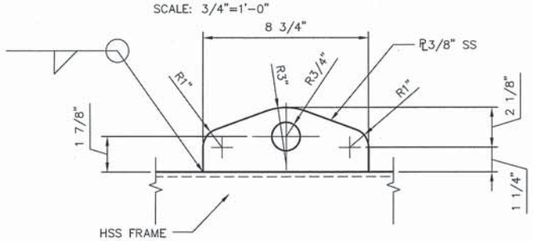

LIFTING LUG

3 S31 S31

0 1 FT

SCALE: 3"=1'-0"

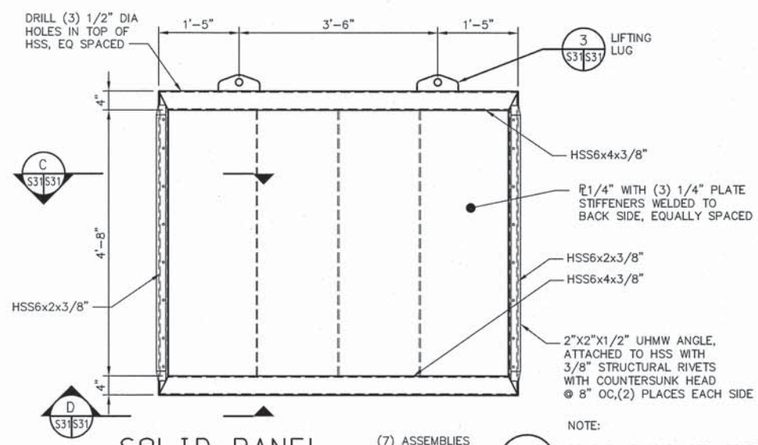

SOLID PANEL

(7) ASSEMBLIES REQUIRED

4 S13 S31

0 1 2 4 FT

SCALE: 3/4"=1'-0"

NOTE:

SOLID PANEL IS PLACED ABOVE INTAKE SCREEN PANEL TO CLOSE THE OPEN AREA ABOVE THE INTAKE SCREEN PANEL.

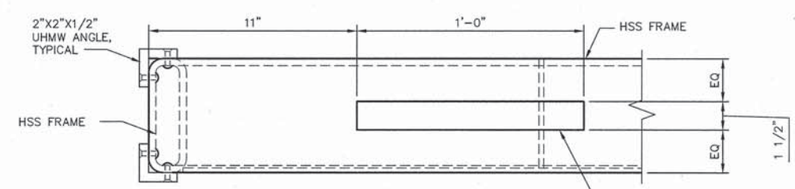

SECTION

D S31 S31

0 1 FT

SCALE: 3"=1'-0"

BAR LENGTH ON ORIGINAL DRAWING EQUALS ONE INCH. ADJUST SCALE ACCORDINGLY

HDR Fisheries DESIGN CENTER

REGISTERED PROFESSIONAL ENGINEER JONATHON A. MANN C63782 Exp. 4/30/14 CIVIL STATE OF CALIFORNIA

3/17/14

NO.	DATE	REVISION	BY
A	3/17/14	ISSUED FOR BIDS	JM

SONOMA COUNTY WATER AGENCY

SCALE: AS NOTED | DATE: 3/17/14

DRAWN: ACB

REVIEWED:

Sonoma County Water Agency

Mirabel Fish Screen and Fish Ladder Replacement

INTAKE SCREEN ELEVATION, SECTIONS AND DETAILS

FILE NAME: 164479_s31.dwg

CONTRACT NUMBER: ####

DRAWING NUMBER: S31

SHEET 62 OF 99

C:\pwworking\sno\d0799528\164479_S31

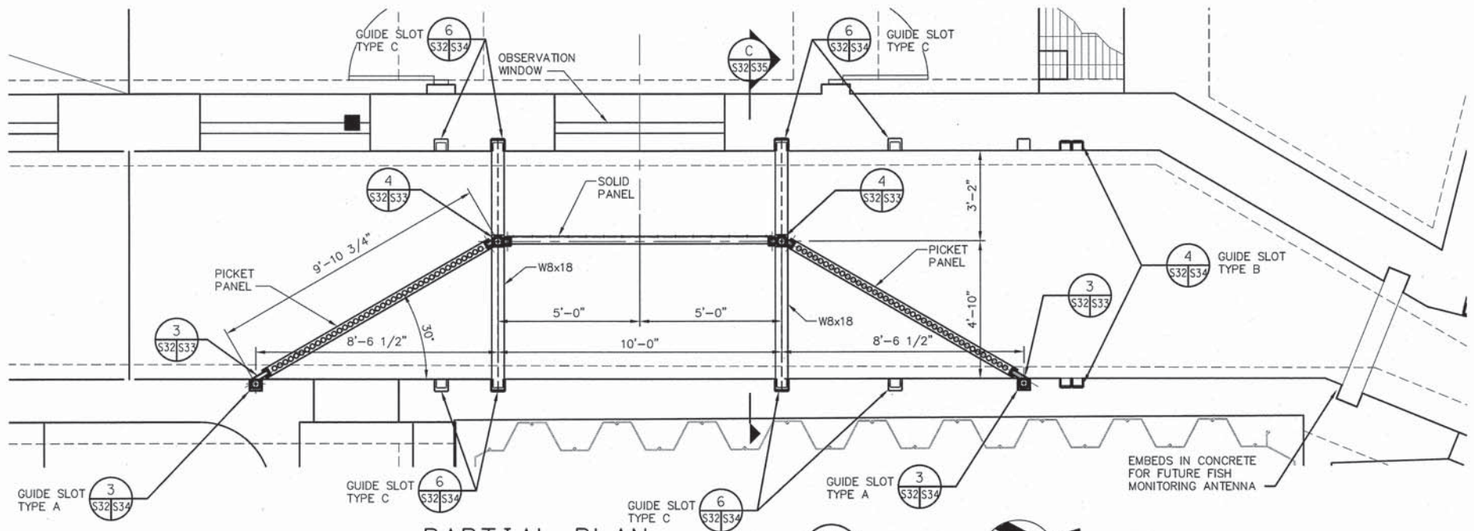

PARTIAL PLAN

0 2 4 8 FT

SCALE: 3/8"=1'-0"

NOTE: SPARE GUIDE SLOTS TO BE TYPE A

NOTES:

1. ALL MATERIAL SHALL BE TYPE 304 STAINLESS STEEL.
2. ALL SHARP EDGES AND BURRS SHALL BE GROUND SMOOTH AFTER FABRICATION.

BAR LENGTH ON ORIGINAL DRAWING EQUALS ONE INCH. ADJUST SCALE ACCORDINGLY

HDR Fisheries DESIGN CENTER

REGISTERED PROFESSIONAL ENGINEER JONATHON A. MANN C63782 Exp. 9/30/14 CIVIL STATE OF CALIFORNIA

3/17/14

NO.	DATE	REVISION	BY
A	3/17/14	ISSUED FOR BIDS	JM

SONOMA COUNTY WATER AGENCY

SCALE: AS NOTED
DATE: 3/17/14
DRAWN: ACB
REVIEWED:

Sonoma County Water Agency

Mirabel Fish Screen and Fish Ladder Replacement

MONITORING AREA PLAN

FILE NAME: 164479_s32.dwg
CONTRACT NUMBER: ####
DRAWING NUMBER: S32
SHEET 63 OF 99

C:\pwworking\sea\d0799528\164479_S32

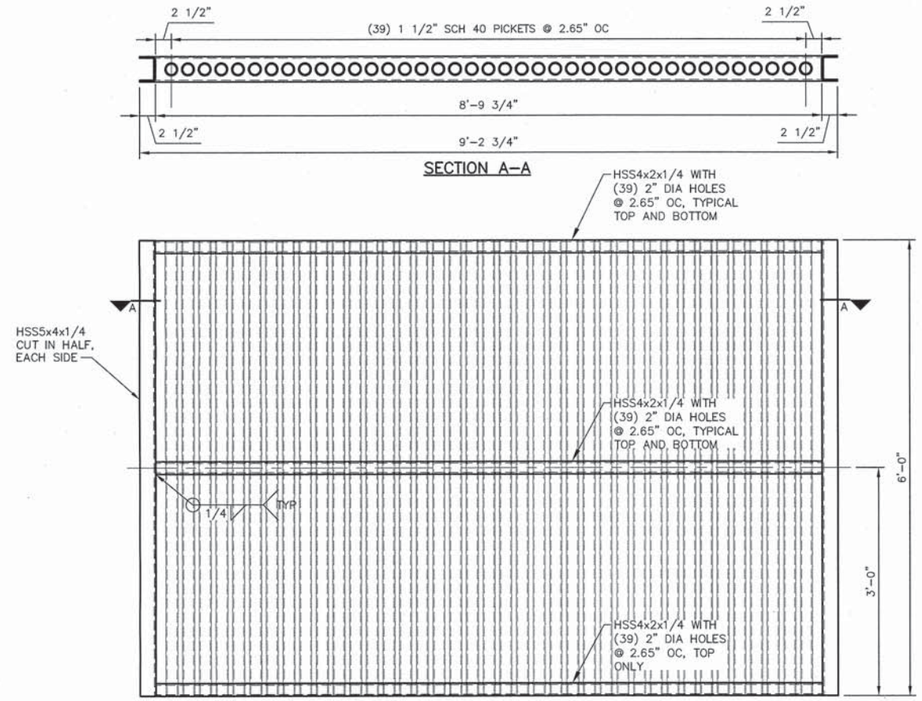

PICKET PANEL DETAIL 1 S32 S33 (4) REQUIRED

0 1 2 3 FT

SCALE: 1"=1'-0"

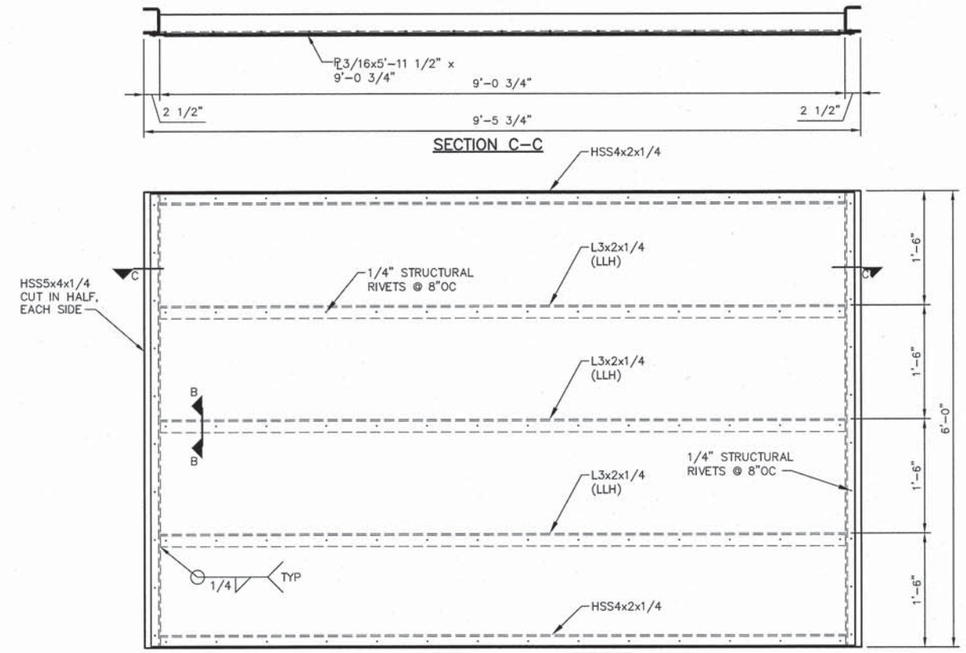

SOLID PANEL DETAIL 2 S32 S33 (2) REQUIRED

0 1 2 3 FT

SCALE: 1"=1'-0"

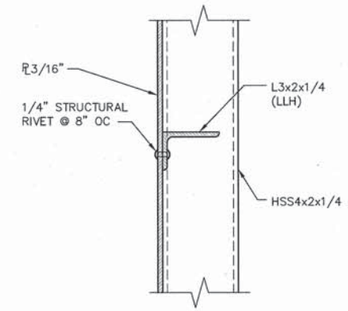

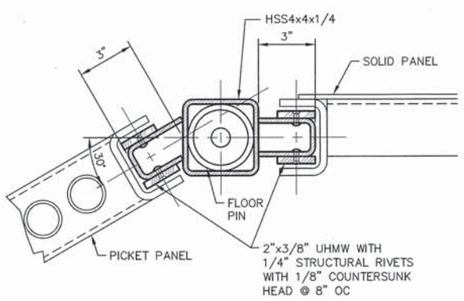

DETAIL 3 S32 S33

0 1 FT

SCALE: 3"=1'-0"

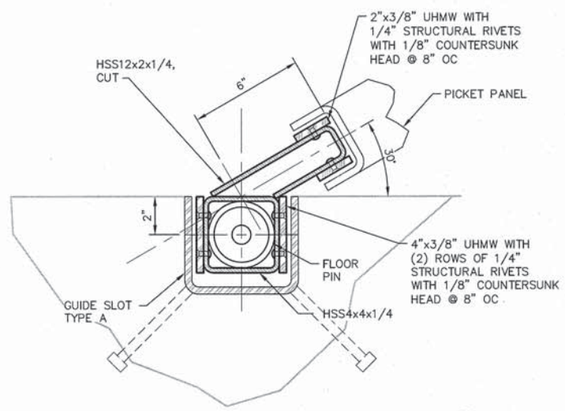

DETAIL 4 S32 S33

0 1 FT

SCALE: 3"=1'-0"

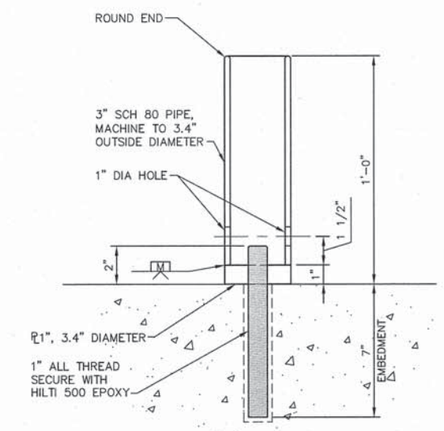

DETAIL 5 S32 S33

0 1 FT

SCALE: 3"=1'-0"

NOTES:

1. ALL MATERIAL SHALL BE TYPE 304 STAINLESS STEEL.
2. ALL SHARP EDGES AND BURRS SHALL BE GROUND SMOOTH AFTER FABRICATION.

BAR LENGTH ON ORIGINAL DRAWING EQUALS ONE INCH. ADJUST SCALE ACCORDINGLY

HDR Fisheries DESIGN CENTER

REGISTERED PROFESSIONAL ENGINEER JONATHON A. MANN C63782 Exp. 9/30/14 CIVIL STATE OF CALIFORNIA

3/17/14

NO.	DATE	REVISION	BY
A	3/17/14	ISSUED FOR BIDS	JM

SONOMA COUNTY WATER AGENCY

SCALE: AS NOTED | DATE: 3/17/14

DRAWN: ACB

REVIEWED:

Sonoma County Water Agency

Mirabel Fish Screen and Fish Ladder Replacement

MONITORING AREA DETAILS AND SECTIONS

FILE NAME: 164479_s33.dwg

CONTRACT NUMBER: ####

DRAWING NUMBER: S33

SHEET 64 OF 99

C:\pwworking\sea\d0799528\164479_S33

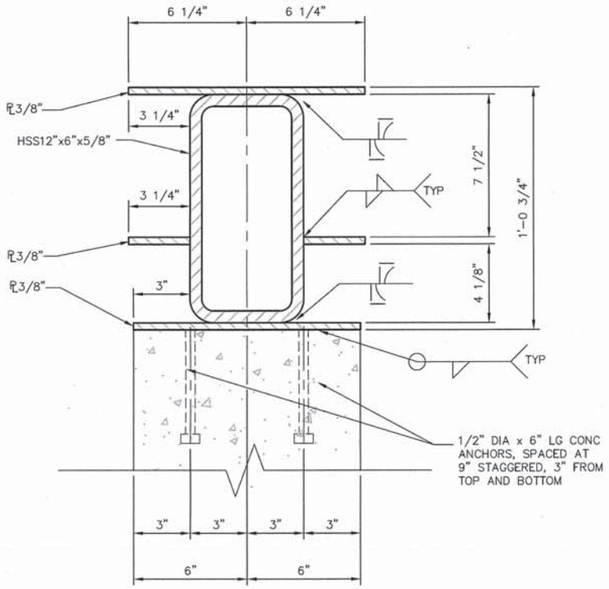

SCREEN GUIDE 1

1 / S13 S34

0 — 1 FT

SCALE: 3"=1'-0"

NOTE:

(5) ASSEMBLIES REQUIRED

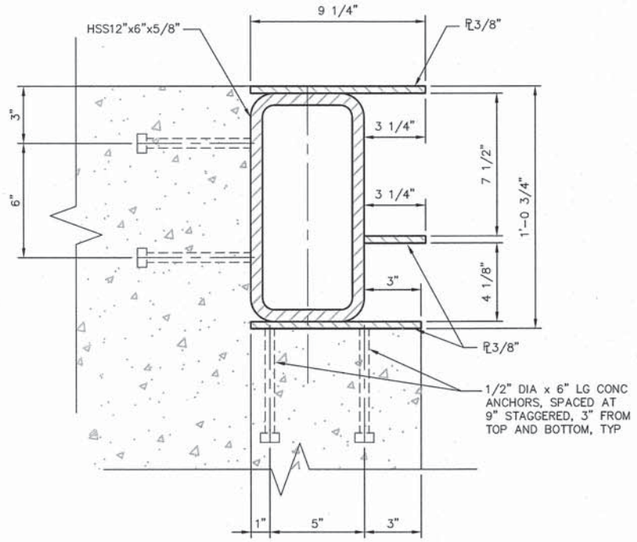

SCREEN GUIDE 2

2 / S13 S34

0 — 1 FT

SCALE: 3"=1'-0"

NOTES:

1. SEE DETAIL 1/S27 FOR COMMON WELDS.
2. (2) ASSEMBLIES REQUIRED, (1) AS SHOWN AND (1) MIRROR IMAGE.

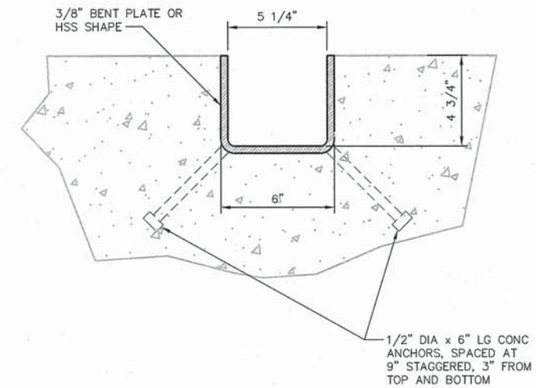

GUIDE SLOT TYPE A

3 / S12 S34

0 — 1 FT

SCALE: 3"=1'-0"

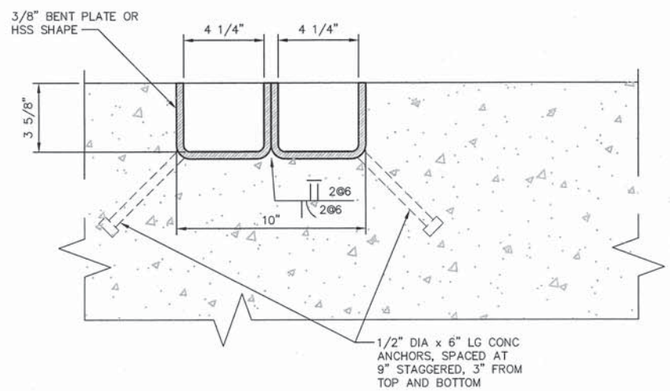

GUIDE SLOT TYPE B

4 / S12 S34

0 — 1 FT

SCALE: 3"=1'-0"

NOTE:

(4) ASSEMBLIES REQUIRED

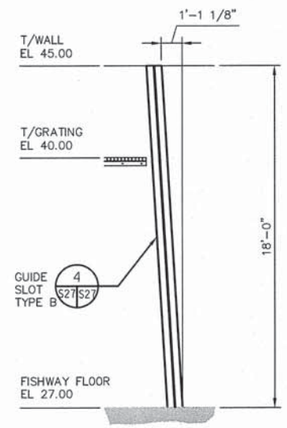

TRASH RACK GUIDE SLOT

5 / S12 S34

0 — 4 — 8 — 12 FT

SCALE: 1/4"=1'-0"

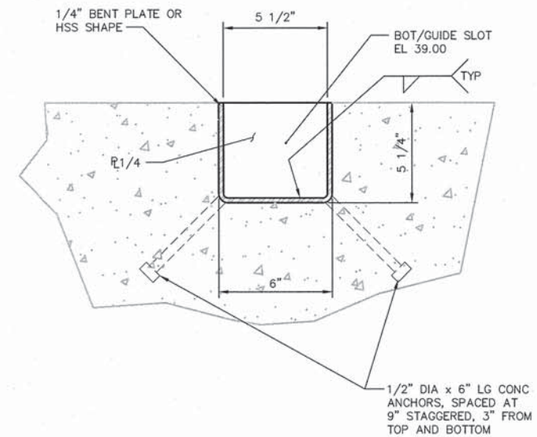

GUIDE SLOT TYPE C

6 / S12 S34

0 — 1 FT

SCALE: 3"=1'-0"

BAR LENGTH ON ORIGINAL DRAWING EQUALS ONE INCH. ADJUST SCALE ACCORDINGLY

HDR Fisheries DESIGN CENTER

REGISTERED PROFESSIONAL ENGINEER JONATHON A. MANN C63782 Exp. 9/30/14 CIVIL STATE OF CALIFORNIA

3/17/14

NO.	DATE	REVISION	BY
A	3/17/14	ISSUED FOR BIDS	JM

SONOMA COUNTY WATER AGENCY

SCALE: AS NOTED | DATE: 3/17/14

DRAWN: ACB

REVIEWED:

Sonoma County Water Agency

Mirabel Fish Screen and Fish Ladder Replacement

GUIDE SLOT DETAILS 1

FILE NAME: 164479_s34.dwg

CONTRACT NUMBER: ####

DRAWING NUMBER: S34

SHEET 65 OF 99

C:\pwworking\sea\d0799528\164479_S34

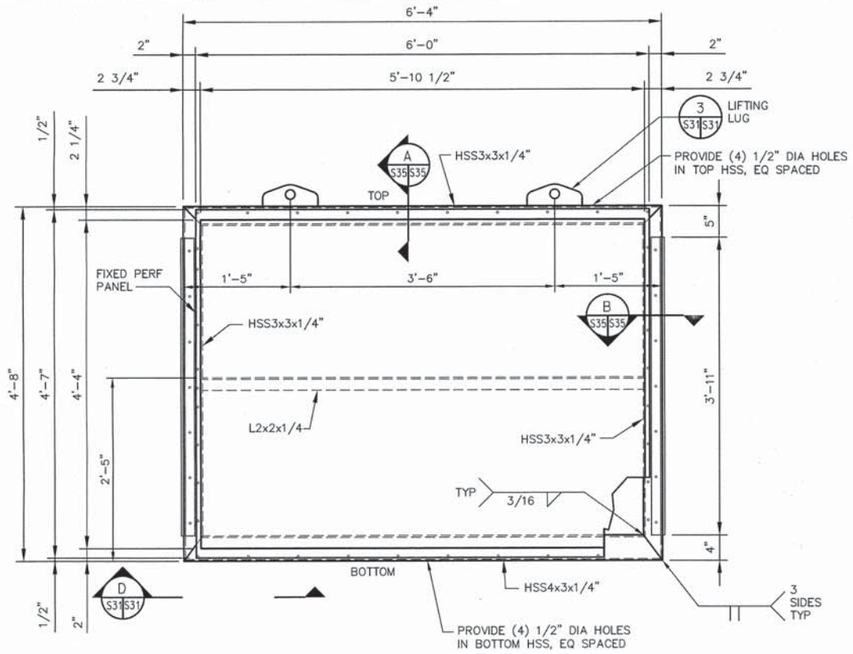

GENERAL NOTE:
PANEL ASSEMBLY FOR BEHIND FISH SCREEN. SEE SHEET S31.

PERFORATED PLATE PANEL ASSEMBLY (1 S31 S35)

0 1 2 3 FT
SCALE: 1"=1'-0"

NOTES:
DETAIL 1: 20% OPEN AREA, 3/16" THICK PERFORATED PLATE WITH 1/4" DIA HOLE SIZE, (12) ASSEMBLIES REQUIRED.
DETAIL 2: 40% OPEN AREA, 3/16" THICK PERFORATED PLATE WITH 1/4" DIA HOLE SIZE, (6) ASSEMBLIES REQUIRED.

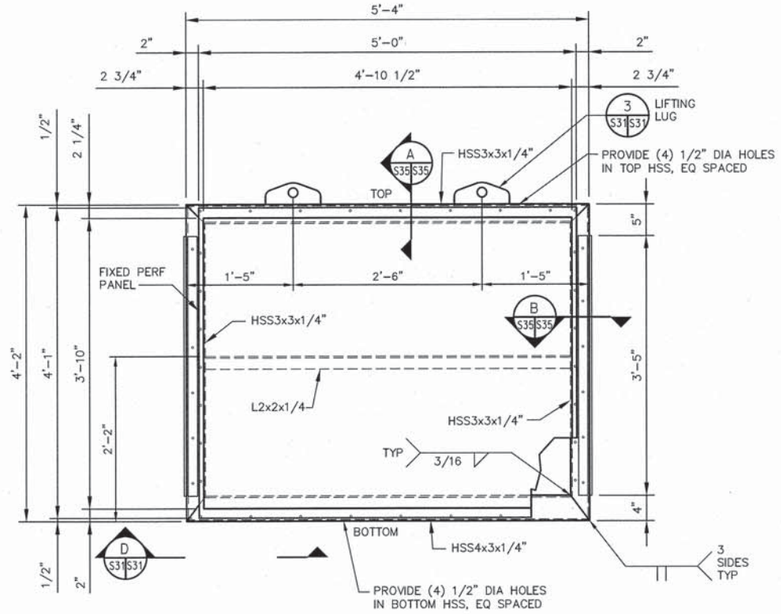

GENERAL NOTE:
PANEL ASSEMBLY FOR INSIDE CHANNELS OF ATTRACTION FLOW DIFFUSER PLAN, SEE SHEET S37.

PERFORATED PLATE PANEL ASSEMBLY (2 S27 S37)

0 1 2 3 FT
SCALE: 1"=1'-0"

NOTES:
DETAIL 1: 20% OPEN AREA, 3/16" THICK PERFORATED PLATE WITH 1/4" DIA HOLE SIZE, (3) ASSEMBLIES REQUIRED.
DETAIL 2: 40% OPEN AREA, 3/16" THICK PERFORATED PLATE WITH 1/4" DIA HOLE SIZE, (3) ASSEMBLIES REQUIRED.

NOTES:

1. ALL MATERIAL SHALL BE TYPE 304 STAINLESS STEEL.
2. ALL SHARP EDGES AND BURRS SHALL BE GROUND SMOOTH AFTER FABRICATION.

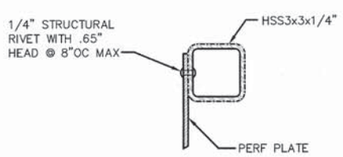

SECTION (A S35 S35)

0 1 FT
SCALE: 3"=1'-0"

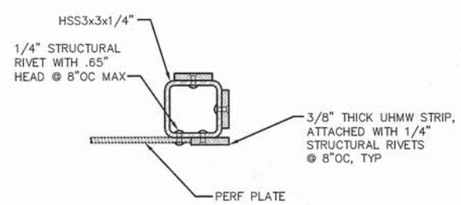

SECTION (B S35 S35)

0 1 FT
SCALE: 3"=1'-0"

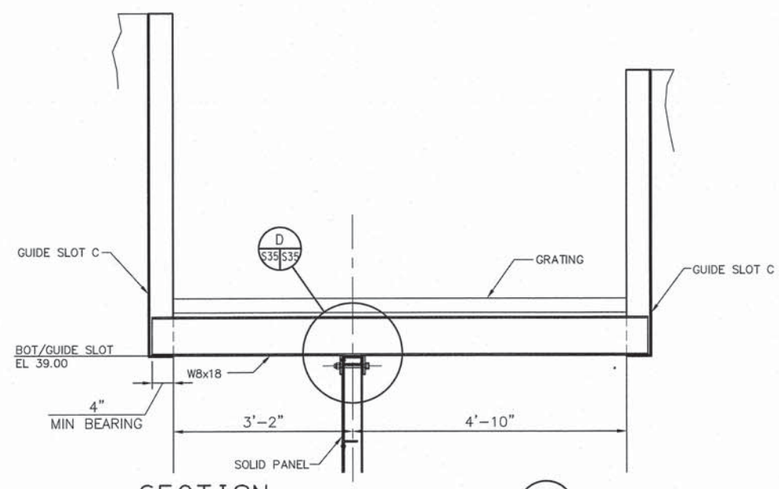

SECTION (C S32 S35)

0 1 2 4 FT
SCALE: 3/4"=1'-0"

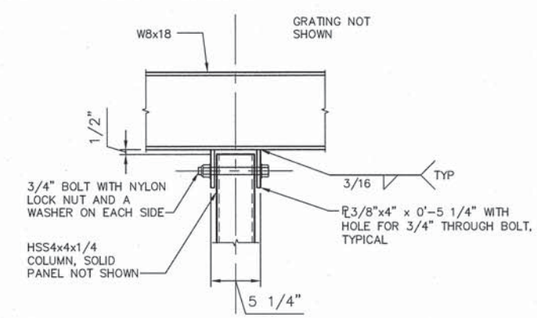

SECTION (D S35 S35)

0 1 2 FT
SCALE: 1 1/2"=1'-0"

BAR LENGTH ON ORIGINAL DRAWING EQUALS ONE INCH. ADJUST SCALE ACCORDINGLY

HDR Fisheries DESIGN CENTER

REGISTERED PROFESSIONAL ENGINEER JONATHON A. MANN C63782 Exp. 9/30/14 CIVIL STATE OF CALIFORNIA
3/17/14

NO.	DATE	REVISION	BY
A	3/17/14	ISSUED FOR BIDS	JM

SONOMA COUNTY WATER AGENCY

SCALE: AS NOTED
DATE: 3/17/14
DRAWN: ACB
REVIEWED:

Sonoma County Water Agency
Mirabel Fish Screen and Fish Ladder Replacement
INTAKE SCREEN BAFFLE ASSEMBLY AND SECTIONS

FILE NAME: 164479_s35.dwg
CONTRACT NUMBER: ####
DRAWING NUMBER: S35
SHEET 66 OF 99

C:\pwworking\sea\d0799528\164479_S35

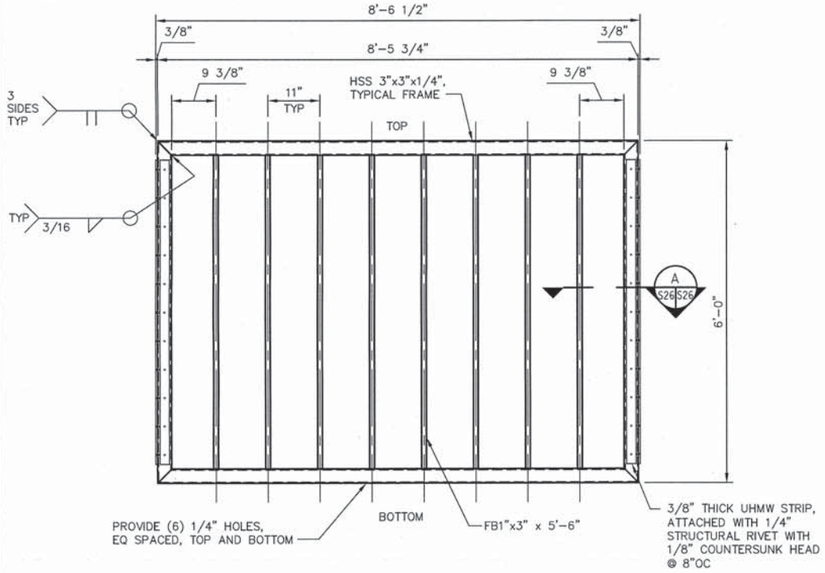

TRASHRACK ELEVATION

1 S12 S36 (2) REQUIRED

0 1 2 4 FT

SCALE: 3/4"=1'-0"

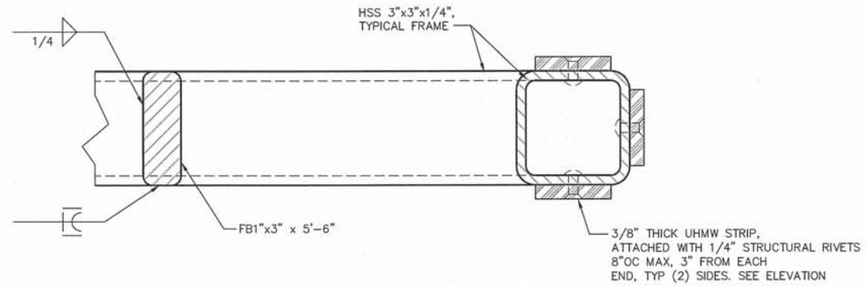

SECTION

A S36 S36

0 1/2 FT

SCALE: 6"=1'-0"

BAR LENGTH ON ORIGINAL DRAWING EQUALS ONE INCH. ADJUST SCALE ACCORDINGLY

HDR Fisheries DESIGN CENTER

REGISTERED PROFESSIONAL ENGINEER JONATHON A. MANN C63782 Exp. 9/30/14 CIVIL STATE OF CALIFORNIA

3/17/14

NO.	DATE	REVISION	BY
A	3/17/14	ISSUED FOR BIDS	JM

SONOMA COUNTY WATER AGENCY

SCALE: AS NOTED

DATE: 3/17/14

DRAWN: ACB

REVIEWED:

Sonoma County Water Agency

Mirabel Fish Screen and Fish Ladder Replacement

TRASH RACK ELEVATION AND SECTION

FILE NAME: 164479_s36.dwg

CONTRACT NUMBER: ####

DRAWING NUMBER: S36

SHEET 67 OF 99

C:\pwworking\sea\d0799528\164479_S36

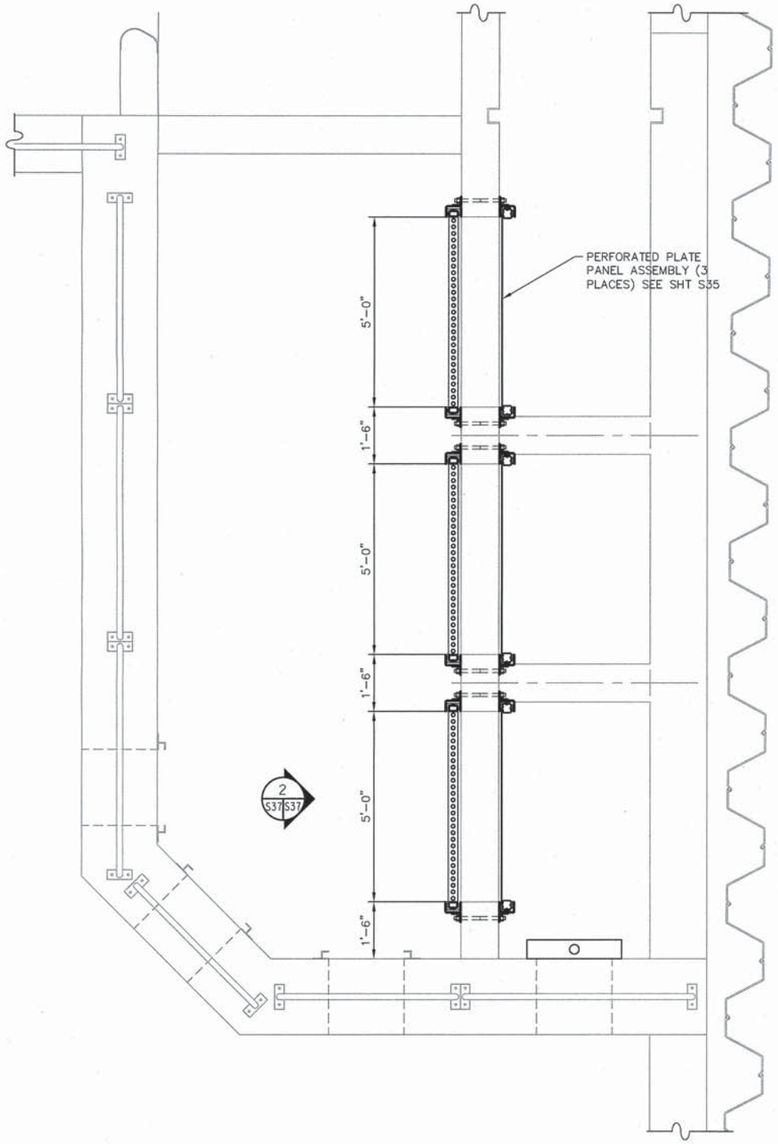

PARTIAL PLAN 1 S12 S37

0 1 2 4 6 FT

SCALE: 1/2"=1'-0"

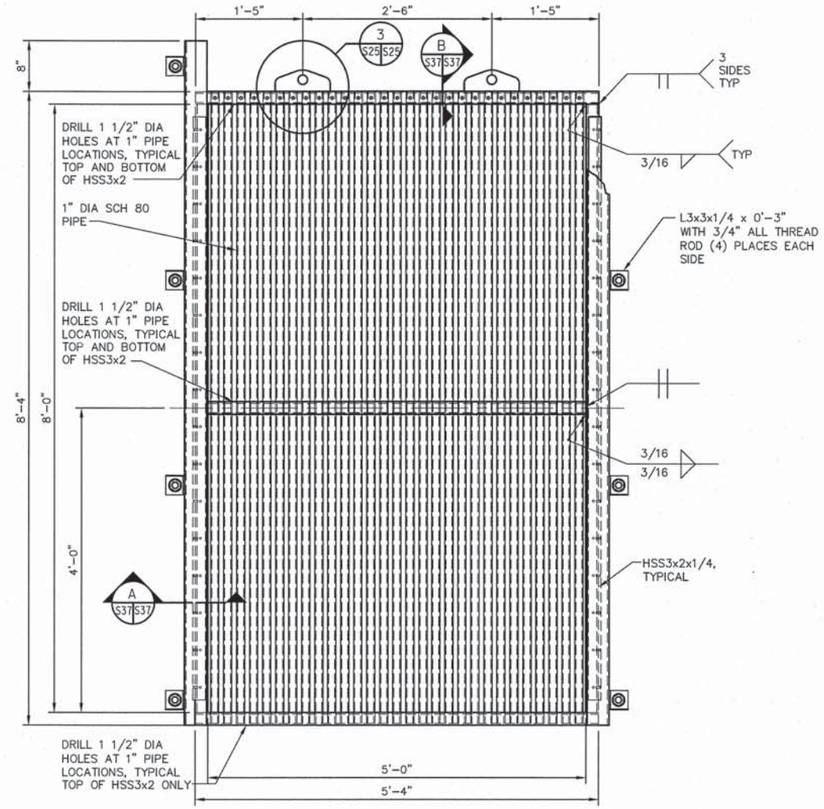

DIFFUSER PANEL DETAIL 2 S37 S37 (3) REQUIRED

0 1 2 3 FT

SCALE: 1"=1'-0"

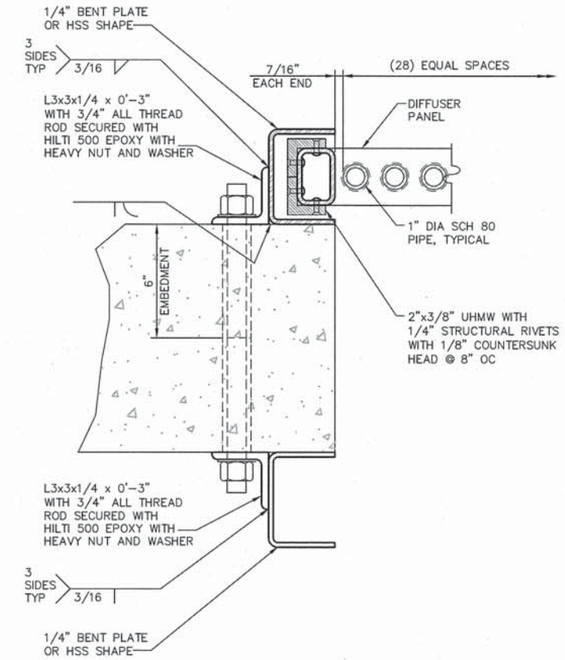

SECTION A S37 S37

0 1 FT

SCALE: 3"=1'-0"

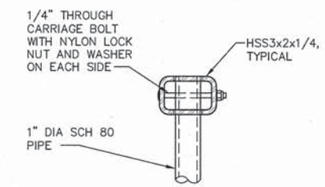

SECTION B S37 S37

0 1 FT

SCALE: 3"=1'-0"

BAR LENGTH ON ORIGINAL DRAWING EQUALS ONE INCH. ADJUST SCALE ACCORDINGLY

HDR Fisheries DESIGN CENTER

REGISTERED PROFESSIONAL ENGINEER JONATHON A. MANN C63782 Exp. 9/30/14 CIVIL STATE OF CALIFORNIA 3/17/14

NO.	DATE	REVISION	BY
A	3/17/14	ISSUED FOR BIDS	JM

SONOMA COUNTY WATER AGENCY

SCALE: AS NOTED DATE: 3/17/14
DRAWN: ACB
REVIEWED:

Sonoma County Water Agency

Mirabel Fish Screen and Fish Ladder Replacement

ATTRACTION FLOW DIFFUSER PLAN, SECTIONS AND DETAILS

FILE NAME: 164479_s37.dwg
CONTRACT NUMBER: ####
DRAWING NUMBER: S37
SHEET 68 OF 99

C:\pwworking\sec\d0799528\164479_S37

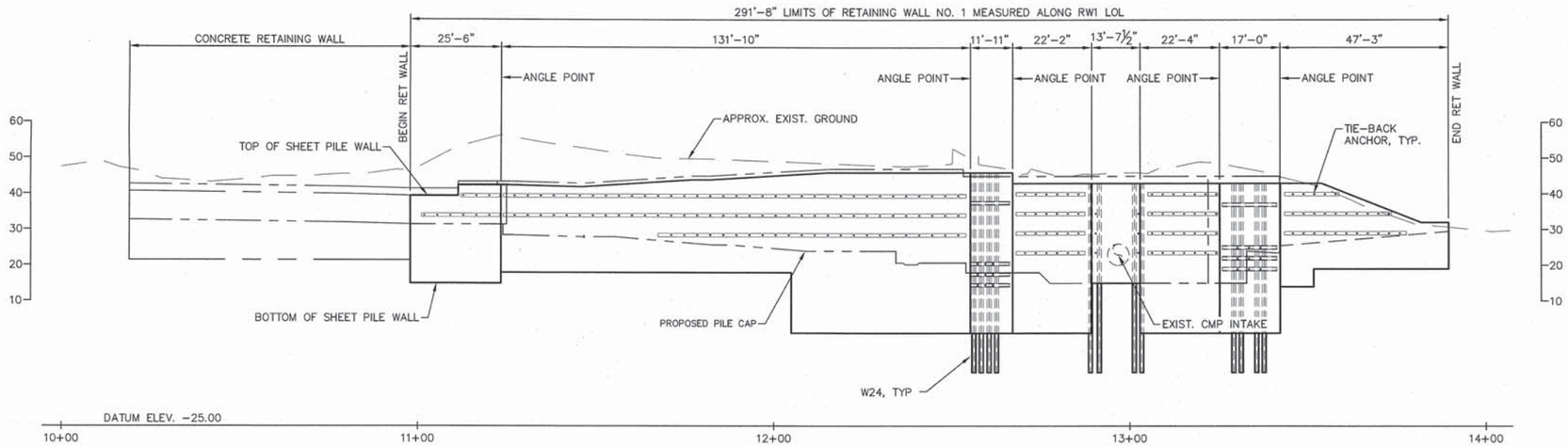

ELEVATION

0 20 40 60 FT

SCALE: 1"=20'

1 / S9

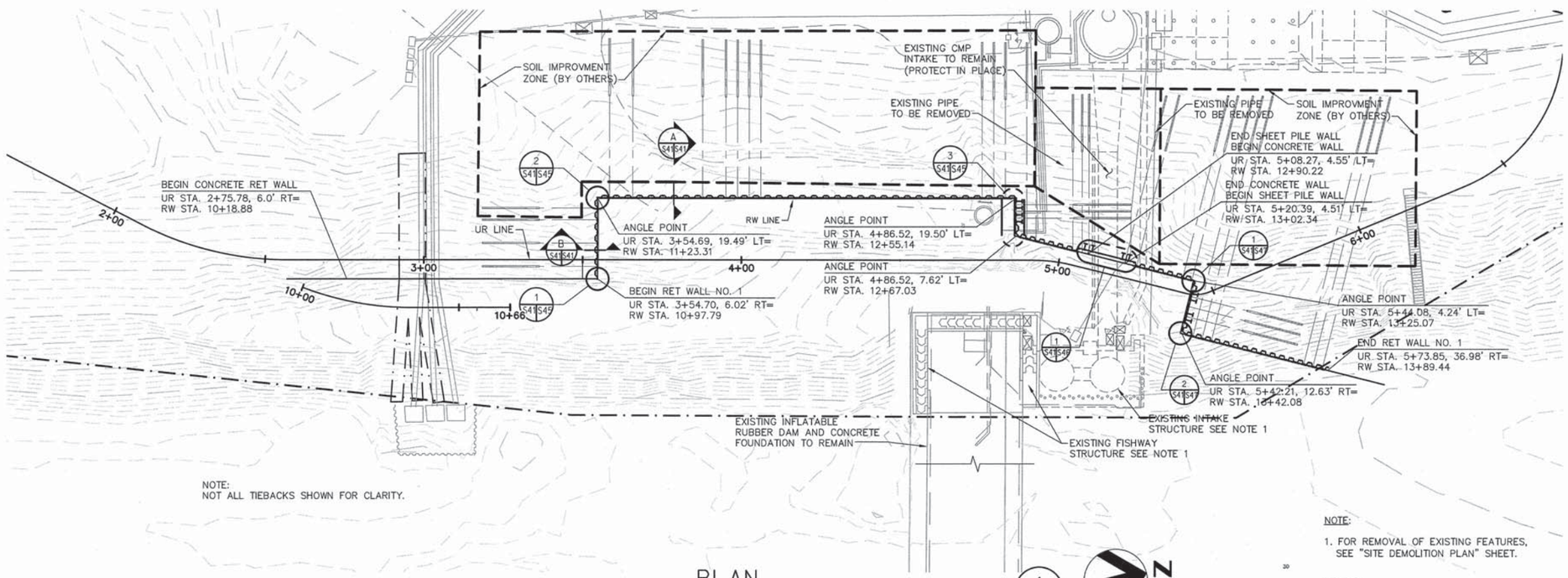

NOTE:
NOT ALL TIEBACKS SHOWN FOR CLARITY.

PLAN

0 20 40 60 FT

SCALE: 1"=20'

1 / S9

NOTE:

1. FOR REMOVAL OF EXISTING FEATURES, SEE "SITE DEMOLITION PLAN" SHEET.

LEGEND:

1. UR DENOTES UPPER ROAD STATION LINE.
2. RW DENOTES RETAINING WALL.

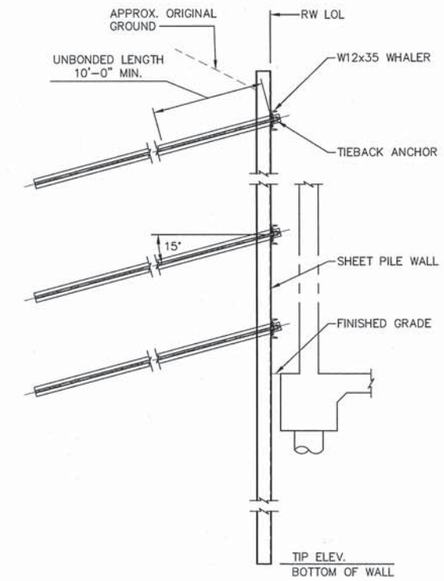

15° TIEBACK TYPICAL SECTION

0 4 8 12 FT

SCALE: 1/4"=1'-0"

A / S41 S41

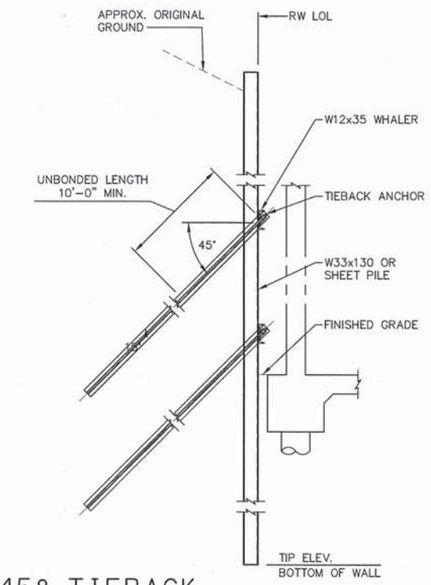

45° TIEBACK TYPICAL SECTION

0 4 8 12 FT

SCALE: 1/4"=1'-0"

B / S41 S41

BAR LENGTH ON ORIGINAL DRAWING EQUALS ONE INCH. ADJUST SCALE ACCORDINGLY

HDR Fisheries DESIGN CENTER

NOTE:
THE CONTRACTOR SHALL VERIFY ALL CONTROLLING DIMENSIONS BEFORE ORDERING OF FABRICATING ANY MATERIALS.

REGISTERED PROFESSIONAL ENGINEER
JOHN MANUSCALCO
No. 40911
Exp. 3-31-15
CIVIL
STATE OF CALIFORNIA
3/18/14

NO.	DATE	REVISION	BY
A	3/17/14	ISSUED FOR BIDS	JAM

SONOMA COUNTY WATER AGENCY

SCALE: AS NOTED
DATE: 3/17/14
DRAWN: JG
REVIEWED:

Sonoma County Water Agency

Mirabel Fish Screen and Fish Ladder Replacement
RETAINING WALL NO. 1 PLAN AND ELEVATION

FILE NAME: 164479_s41.dwg
CONTRACT NUMBER: ####
DRAWING NUMBER: S41
SHEET 69 OF 99

C:\pwworking\sea\d0799528\164479_S41

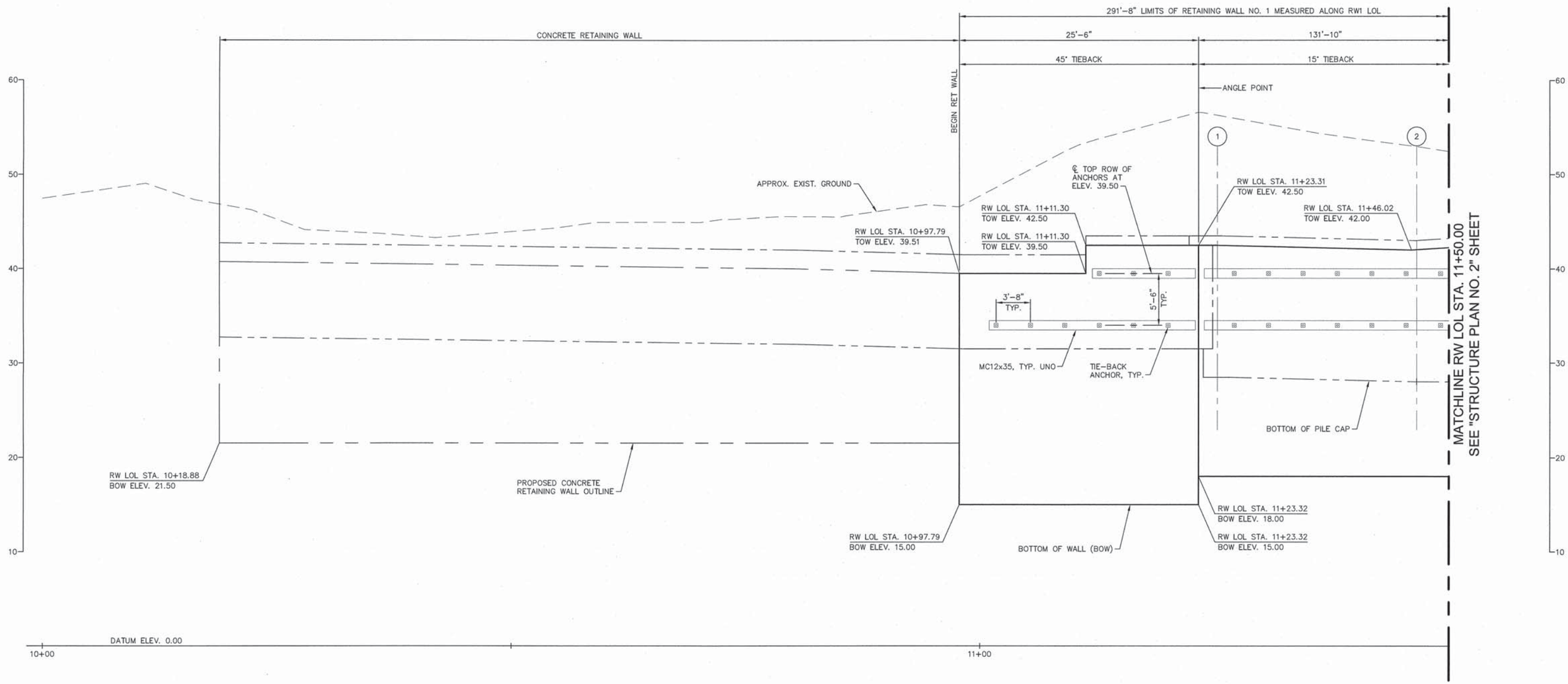

DEVELOPED ELEVATION

(1 / S42 / S42)

0 4 8 16 FT

SCALE: 3/16"=1'-0"

N

BAR LENGTH ON ORIGINAL DRAWING EQUALS ONE INCH. ADJUST SCALE ACCORDINGLY

HDR Fisheries DESIGN CENTER

NOTE:
THE CONTRACTOR SHALL VERIFY ALL CONTROLLING DIMENSIONS BEFORE ORDERING OF FABRICATING ANY MATERIALS.

REGISTERED PROFESSIONAL ENGINEER
JOHN MANSCALCO
No. 40911
Exp. 3-31-15
CIVIL
STATE OF CALIFORNIA
3/18/14

NO.	DATE	REVISION	BY
A	3/17/14	ISSUED FOR BIDS	JAM

SONOMA COUNTY WATER AGENCY

SCALE: AS NOTED
DATE: 3/17/14
DRAWN: JG
REVIEWED:

Sonoma County Water Agency
Mirabel Fish Screen and Fish Ladder Replacement
STRUCTURE PLAN NO. 1

FILE NAME: 164479_s42.dwg
CONTRACT NUMBER: ####
DRAWING NUMBER: S42
SHEET 70 OF 99

C:\pwworking\sea\d0799528\164479_S42

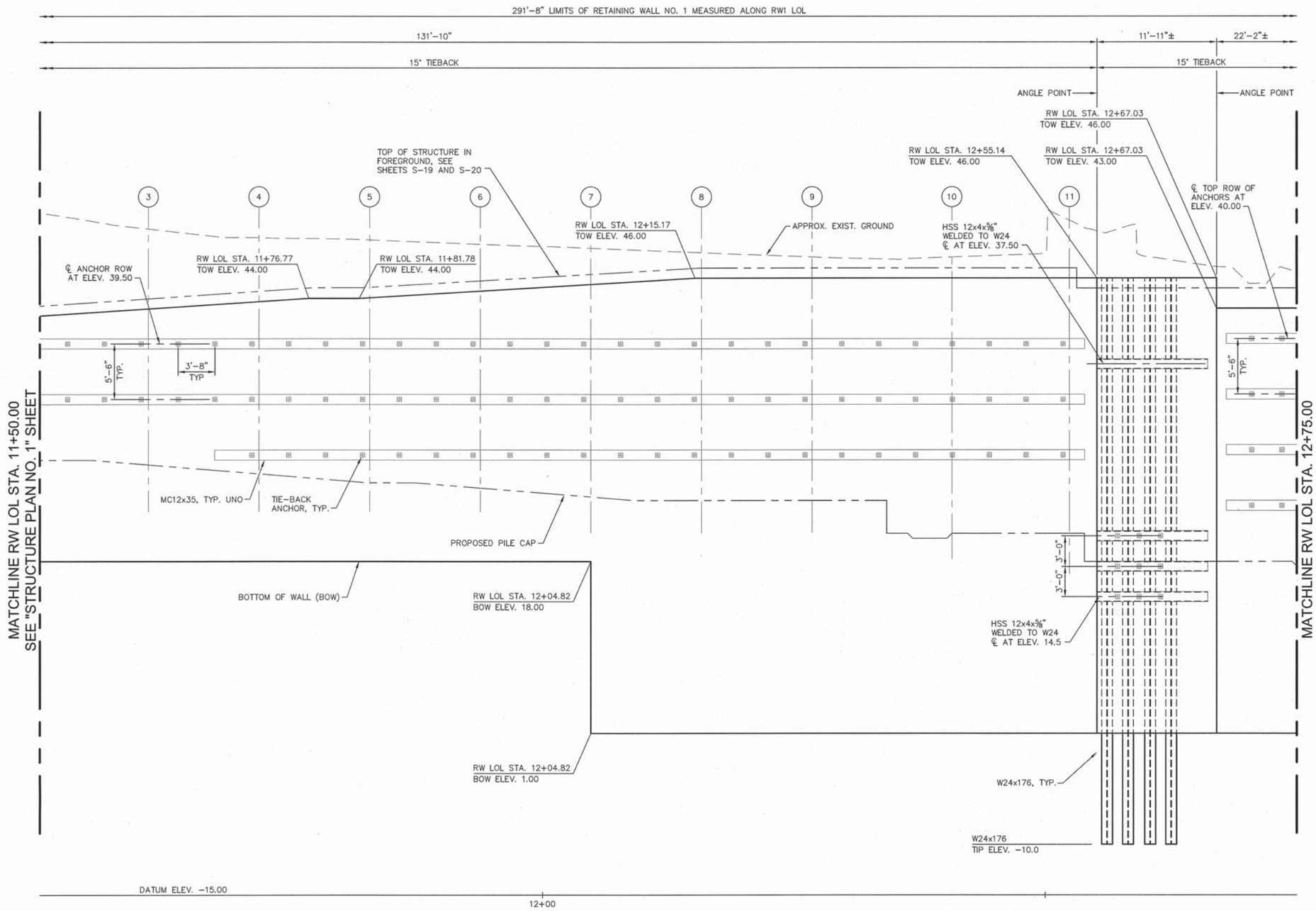

DEVELOPED ELEVATION

1 S43 S43

0 4 8 16 FT

SCALE: 3/16"=1'-0"

N

BAR LENGTH ON ORIGINAL DRAWING EQUALS ONE INCH. ADJUST SCALE ACCORDINGLY

HDR Fisheries DESIGN CENTER

NOTE:
THE CONTRACTOR SHALL VERIFY ALL CONTROLLING DIMENSIONS BEFORE ORDERING OF FABRICATING ANY MATERIALS.

REGISTERED PROFESSIONAL ENGINEER
JOHN MANISCALCO
No. 40911
Exp. 3-31-15
CIVIL
STATE OF CALIFORNIA
3/18/14

NO.	DATE	REVISION	BY
A	3/17/14	ISSUED FOR BIDS	JAM

SONOMA COUNTY WATER AGENCY

SCALE: AS NOTED
DATE: 3/17/14
DRAWN: JG
REVIEWED:

Sonoma County Water Agency
Mirabel Fish Screen and Fish Ladder Replacement
STRUCTURE PLAN NO. 2

FILE NAME: 164479_s43.dwg
CONTRACT NUMBER: ####
DRAWING NUMBER: S43
SHEET 71 OF 99

C:\pwworking\sec\d0799528\164479_S43

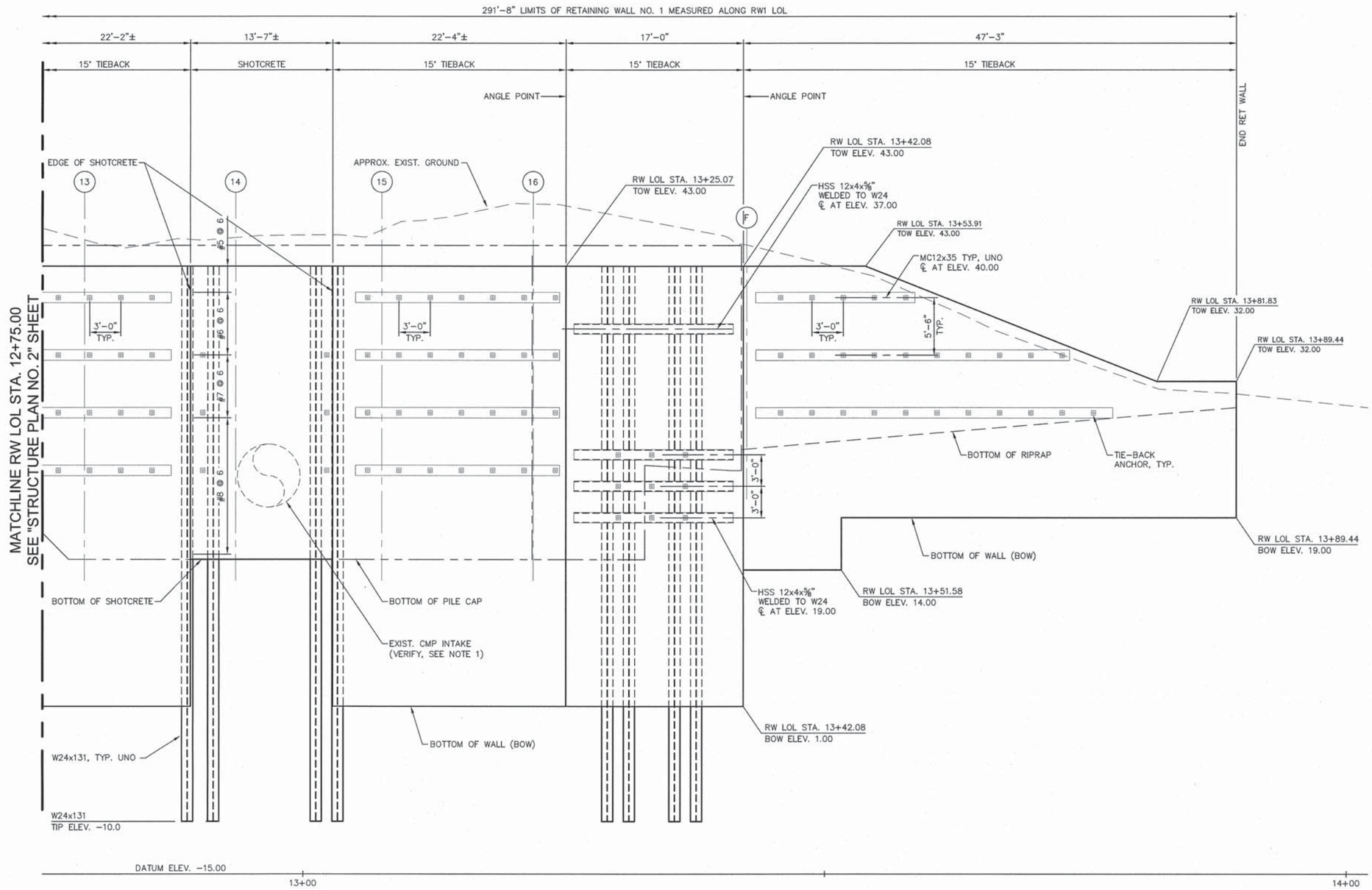

DEVELOPED ELEVATION

(1 / S44 | S44)

0 4 8 16 FT

SCALE: 3/16"=1'-0"

N

NOTE:

1. VERIFY LOCATION OF CMP INTAKE IN FIELD BY POTHOLING BEFORE DRIVING PILING. ADJUST LOCATION OF PILING AS NEEDED TO PROVIDE 12" MINIMUM CLEARANCE BETWEEN OUTSIDE FACE OF CMP AND OUTER EDGE OR W24. SEE SHEET S46.

BAR LENGTH ON ORIGINAL DRAWING EQUALS ONE INCH. ADJUST SCALE ACCORDINGLY

HDR Fisheries DESIGN CENTER

NOTE:
THE CONTRACTOR SHALL VERIFY ALL CONTROLLING DIMENSIONS BEFORE ORDERING OF FABRICATING ANY MATERIALS.

REGISTERED PROFESSIONAL ENGINEER
JOHN MANISCALCO
No. 40911
Exp. 3-31-15
CIVIL
STATE OF CALIFORNIA
3/18/14

NO.	DATE	REVISION	BY
1	2/21/14	ADDENDUM 2	JAM

SONOMA COUNTY WATER AGENCY

SCALE: AS NOTED
DATE: 3.18.2014
DRAWN: JG
REVIEWED:

Sonoma County Water Agency
Mirabel Fish Screen and Fish Ladder Replacement
STRUCTURE PLAN NO. 3

FILE NAME: 164479_s44.dwg
CONTRACT NUMBER: ####
DRAWING NUMBER: S44
SHEET 72 OF 99

C:\pwworking\sea\d0799528\164479_S44

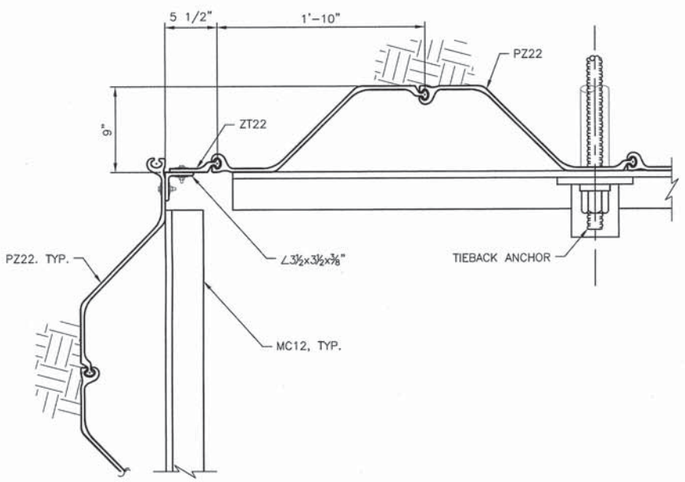

PLAN (2 / S41 S45)

0 1 2 FT

SCALE: 1 1/2"=1'-0"

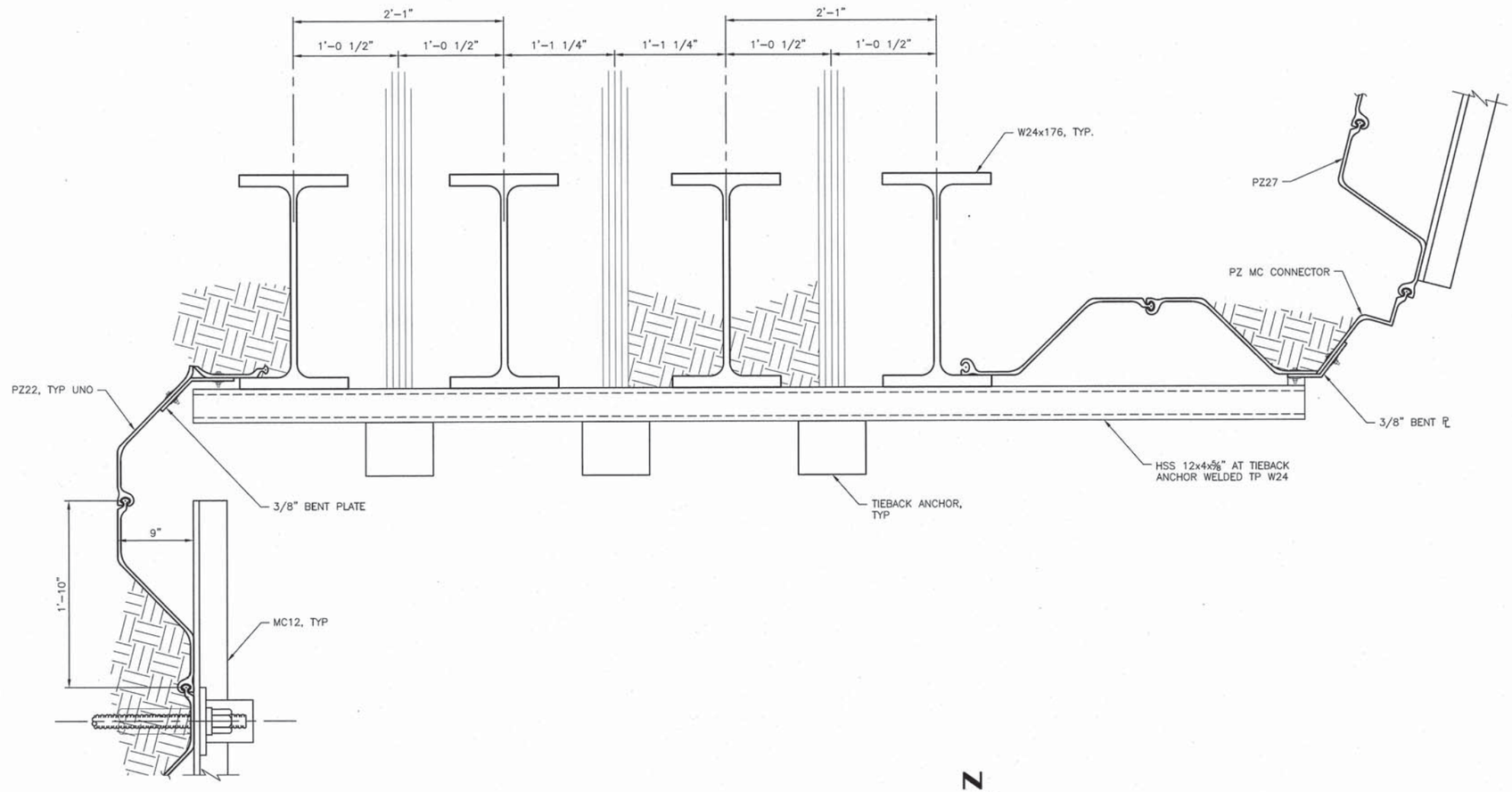

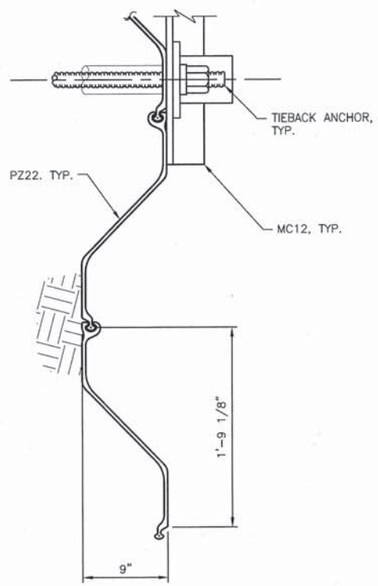

PLAN (1 / S41 S45)

0 1 2 FT

SCALE: 1 1/2"=1'-0"

PLAN (3 / S41 S45)

0 1 2 FT

SCALE: 1 1/2"=1'-0"

SOIL ANCHORS TABLE

Tieback Location		FTL (kips)					Inclination Angle (degrees)	Estimated Tieback Length (feet). Actual length to be determined by contractor.	Anchor
Start Station	End Station	Top Row	2nd Row	3rd Row	4th Row	5th Row			
10+98	11+23	30	40	NA	NA	NA	45	65	1" Dia. Bar
11+23	11+61	30	40	NA	NA	NA	15	65	1" Dia. Bar
11+61	12+07	40	40	40	NA	NA	15	50	1" Dia. Bar
12+07	12+54	40	40	40	40	NA	15	50	1" Dia. Bar
12+54	12+66	120	120	NA	NA	NA	15	80	7 - 0.5" Strands
12+66	12+89	40	40	40	40	40	15	65	1" Dia. Bar
12+89	13+03	100	100	100	NA	NA	15	80	7 - 0.5" Strands
13+03	13+41	120	120	NA	NA	NA	15	80	7 - 0.5" Strands
13+41	13+89	30	30	30	NA	NA	15	55	1" Dia. Bar

BAR LENGTH ON ORIGINAL DRAWING EQUALS ONE INCH. ADJUST SCALE ACCORDINGLY

HDR Fisheries DESIGN CENTER

NOTE:
THE CONTRACTOR SHALL VERIFY ALL CONTROLLING DIMENSIONS BEFORE ORDERING OF FABRICATING ANY MATERIALS.

REGISTERED PROFESSIONAL ENGINEER JOHN MANISCALCO No. 40911 Exp. 3-31-15 CIVIL STATE OF CALIFORNIA 3/18/14

NO.	DATE	REVISION	BY
A	3/17/14	ISSUED FOR BIDS	JAM

SONOMA COUNTY WATER AGENCY

SCALE: AS NOTED
DATE: 3/17/14
DRAWN: JG
REVIEWED:

Sonoma County Water Agency
Mirabel Fish Screen and Fish Ladder Replacement
RETAINING WALL DETAILS NO. 1

FILE NAME: 164479_s45.dwg
CONTRACT NUMBER: ####
DRAWING NUMBER: S45
SHEET 73 OF 99

C:\pwworking\sno\d0799528\164479_S45

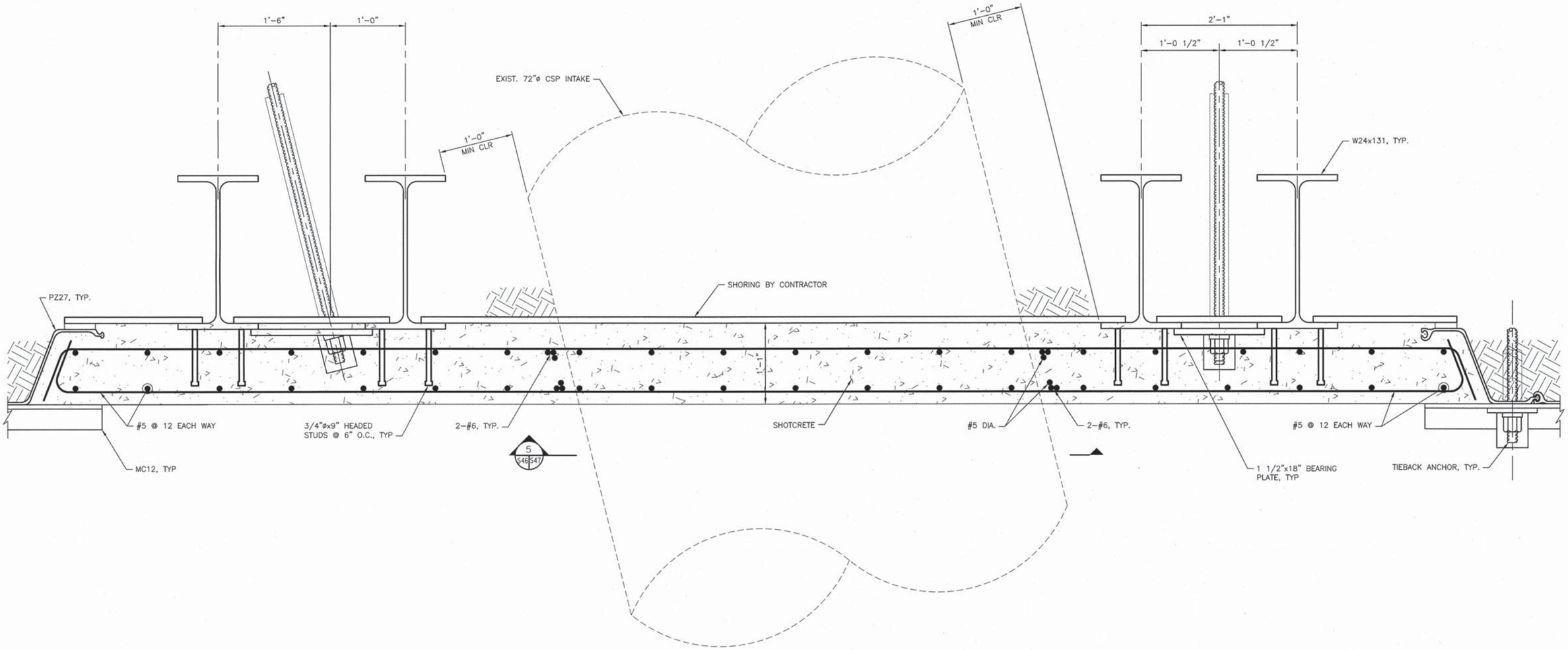

PLAN

1
S41 S46

0 1 2 FT

SCALE: 1 1/2"=1'-0"

N

BAR LENGTH ON ORIGINAL DRAWING EQUALS ONE INCH. ADJUST SCALE ACCORDINGLY

HDR Fisheries DESIGN CENTER

NOTE:
THE CONTRACTOR SHALL VERIFY ALL CONTROLLING DIMENSIONS BEFORE ORDERING OF FABRICATING ANY MATERIALS.

REGISTERED PROFESSIONAL ENGINEER
JOHN MANISCALCO
No. 40911
Exp. 3-31-15
CIVIL
STATE OF CALIFORNIA

NO.	DATE	REVISION	BY
A	3/17/14	ISSUED FOR BIDS	JAM

SONOMA COUNTY WATER AGENCY

SCALE: AS NOTED
DATE: 3/17/14
DRAWN: JG
REVIEWED:

Sonoma County Water Agency
Mirabel Fish Screen and Fish Ladder Replacement
RETAINING WALL DETAILS NO. 2

FILE NAME: 164479_s46.dwg
CONTRACT NUMBER: ####
DRAWING NUMBER: S46
SHEET 74 OF 99

C:\pwworking\sea\d0799528\164479_S46

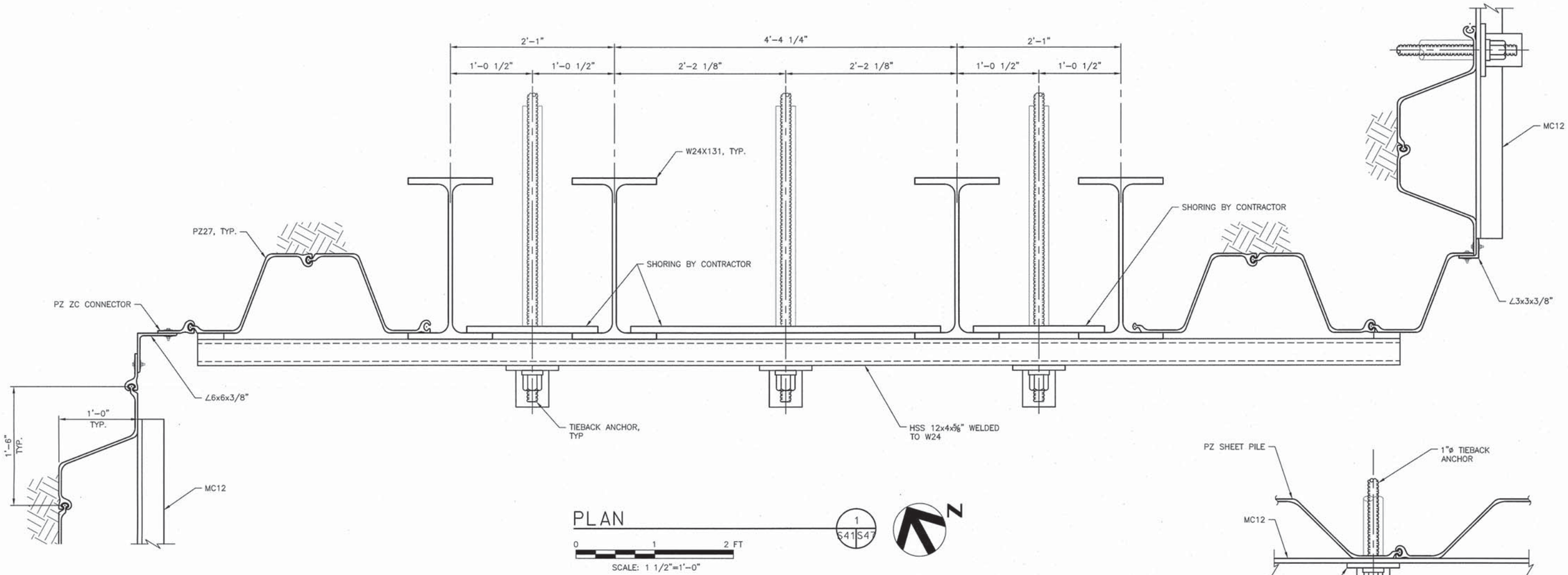

PLAN

1 S41 S47

0 1 2 FT

SCALE: 1 1/2"=1'-0"

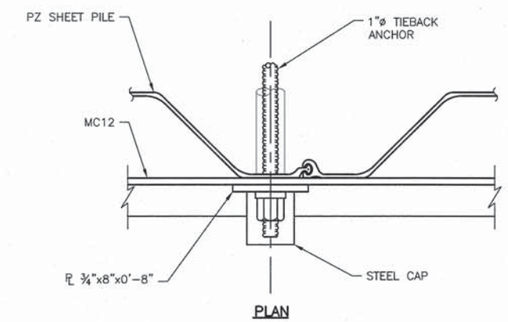

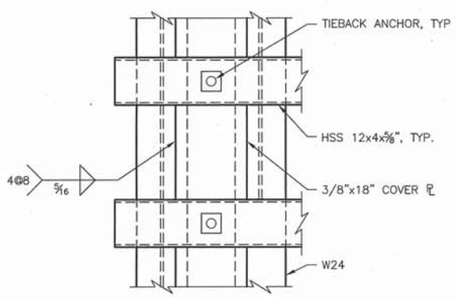

DETAIL

4 -- S47

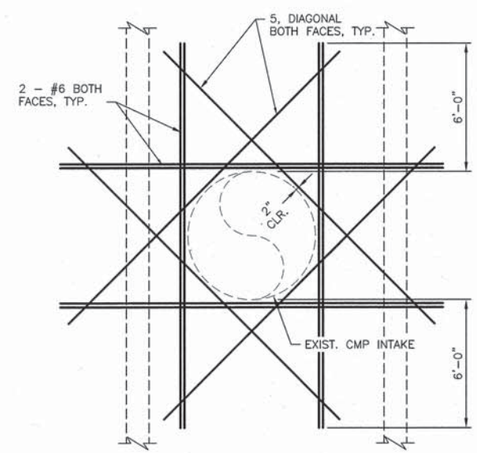

DETAIL

5 S46 S47

DETAIL

3 -- S47

0 1 2 FT

SCALE: 1 1/2"=1'-0"

BAR LENGTH ON ORIGINAL DRAWING EQUALS ONE INCH. ADJUST SCALE ACCORDINGLY

HDR Fisheries DESIGN CENTER

NOTE:
THE CONTRACTOR SHALL VERIFY ALL CONTROLLING DIMENSIONS BEFORE ORDERING OF FABRICATING ANY MATERIALS.

REGISTERED PROFESSIONAL ENGINEER
LAUREN MANSICALCO
No. 40911
Exp. 3-31-15
CIVIL
STATE OF CALIFORNIA
3/18/14

NO.	DATE	REVISION	BY
A	3/17/14	ISSUED FOR BIDS	JAM

SONOMA COUNTY WATER AGENCY

SCALE: AS NOTED
DATE: 3/17/14
DRAWN: JG
REVIEWED:

Sonoma County Water Agency
Mirabel Fish Screen and Fish Ladder Replacement
RETAINING WALL DETAILS NO. 3

FILE NAME: 164479_s47.dwg
CONTRACT NUMBER: ####
DRAWING NUMBER: S47
SHEET 75 OF 99

C:\pwworking\sea\d0799528\164479_S47

GENERAL NOTES

DESIGN:

AASHTO LRFD BRIDGE DESIGN SPECIFICATIONS, 4TH EDITION WITH CALIFORNIA AMENDMENTS.

PRESTRESSING STEEL:

Bars – ASTM DESIGNATION: A722 TYPE II (150 ksi)

STRAND TENDONS–ASTM DESIGNATION: A416 (270 Ksi LOW RELAXATION STEEL)

FTL = FACTORED TEST LOAD PER ANCHOR (Kips)

fpu = MINIMUM TENSILE STRENGTH OF PRESTRESSING STEEL

As = MINIMUM CROSS SECTIONAL AREA OF PRESTRESSING STEEL IN GROUND ANCHOR (square inch)

$As(Min) = \frac{1.0\ FTL}{0.75\ fpu}$ (STRANDS)

$As(Min) = \frac{1.0\ FTL}{0.80\ fpu}$ (BARS)

NOTES:

(A) Level of initial grouting for drilled hole 6" in diameter or smaller

(B) Level of secondary grouting

(C) Level of initial grouting inside corrugated sheathing

(D) Bonded length shall be determined by the contractor

(E) For unbonded length, see PROJECT PLANS

(F) For inclination, see PROJECT PLANS

(G) Face of Wall Excavation

NOTES:

1. ANCHORAGE ENCLOSURE SHALL ONLY BE USED WHEN ANCHOR HEAD ASSEMBLY IS NOT ENCLOSED IN CONCRETE.
2. ANCHORAGE ENCLOSURE SHALL HAVE PROVISIONS TO ALLOW INJECTING GROUT AT LOW END AND VENTING AT HIGH END. GALVANIZE AFTER FABRICATION.
3. SILICONE SEALANT TO COVER FULL WIDTH OF FLANGE.
4. STEEL TUBE (MIN THICKNESS = ¼") WELDED TO BEARING PLATE. GALVANIZE ASSEMBLY AFTER FABRICATION
5. STEEL TUBE WELDED TO BEARING PLATE. INSIDE DIAMETER OF STEEL TUBE (MIN THICKNESS = ¼") TO BE 1" GREATER THAN OUTSIDE DIAMETER OF SMOOTH SHEATHING.
6. GALVANIZE ASSEMBLY AFTER FABRICATION.
7. FOR OTHER WALL DETAILS, SEE PROJECT PLANS.

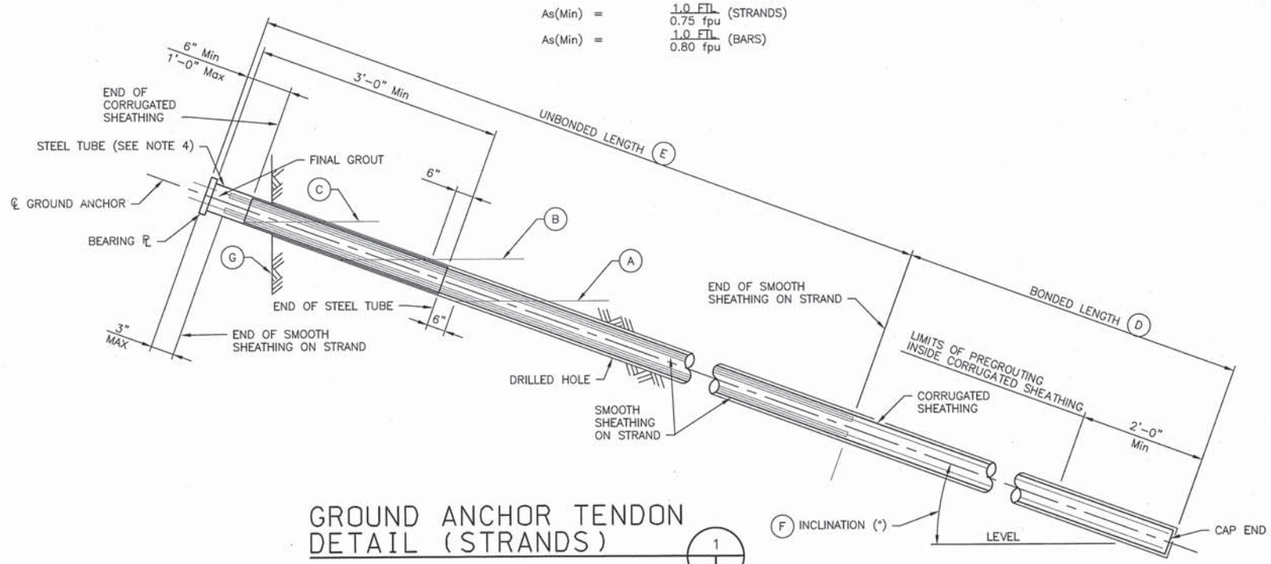

GROUND ANCHOR TENDON DETAIL (STRANDS) (1)

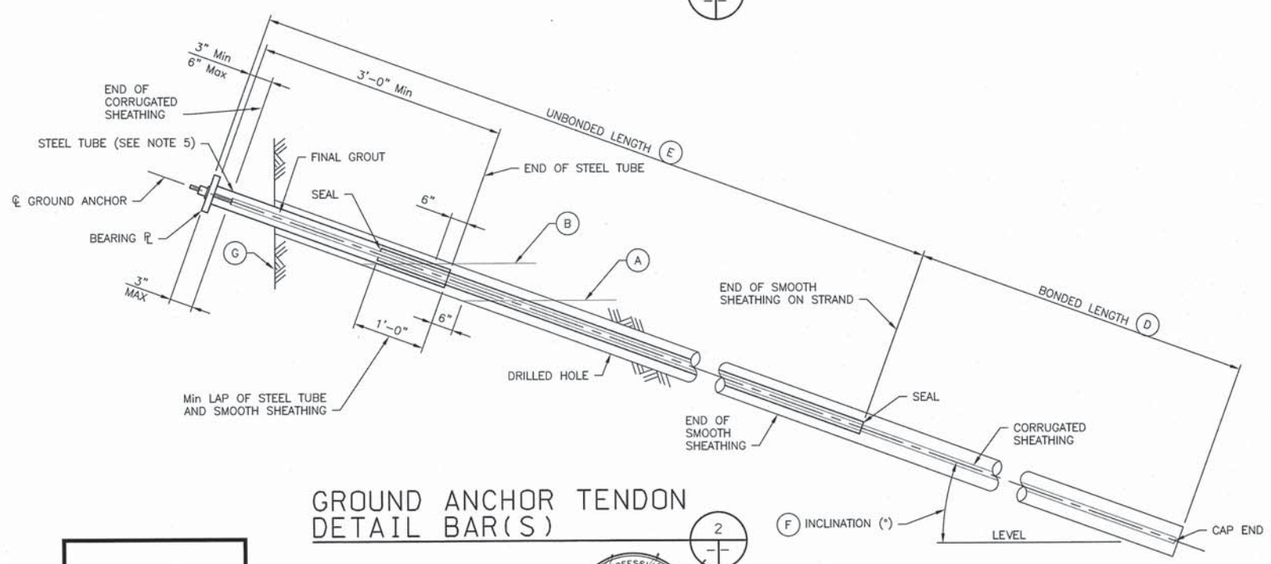

GROUND ANCHOR TENDON DETAIL BAR(S) (2)

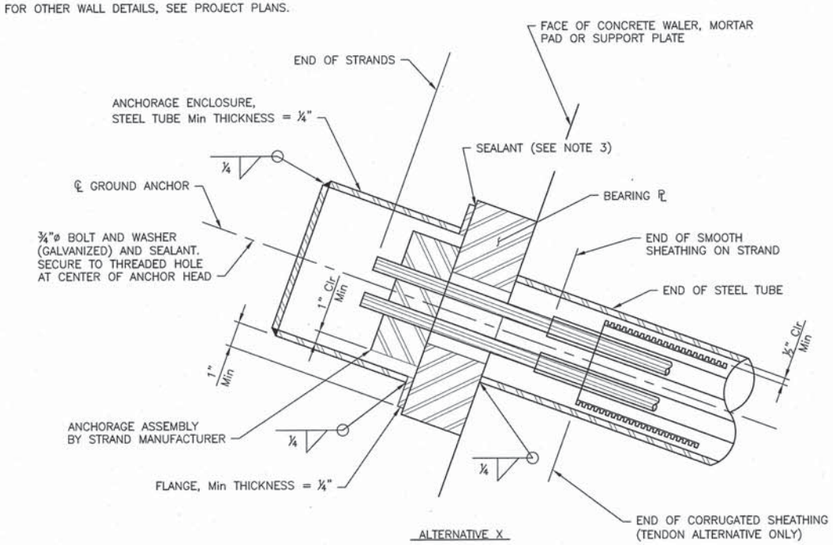

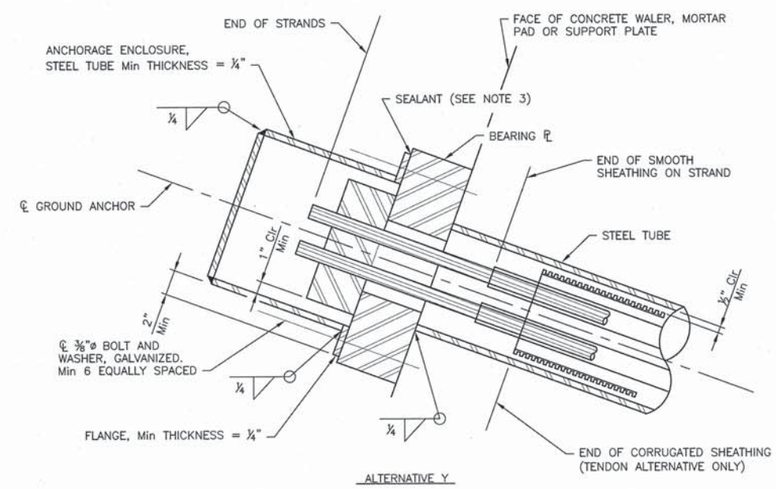

ANCHORAGE ENCLOSURE DETAIL (3)

BAR LENGTH ON ORIGINAL DRAWING EQUALS ONE INCH. ADJUST SCALE ACCORDINGLY

HDR Fisheries DESIGN CENTER

NOTE:
THE CONTRACTOR SHALL VERIFY ALL CONTROLLING DIMENSIONS BEFORE ORDERING OF FABRICATING ANY MATERIALS.

REGISTERED PROFESSIONAL ENGINEER JOHN MANISCALCO No. 40911 Exp. 3-31-15 CIVIL STATE OF CALIFORNIA
3/18/14

NO.	DATE	REVISION	BY
A	3/17/14	ISSUED FOR BIDS	JAM

SONOMA COUNTY WATER AGENCY

SCALE: AS NOTED | DATE: 3/17/14
DRAWN: JG
REVIEWED:

Sonoma County Water Agency
Mirabel Fish Screen and Fish Ladder Replacement
RETAINING WALL DETAILS NO. 4

FILE NAME: 164479_s48.dwg
CONTRACT NUMBER: ####
DRAWING NUMBER: S48
SHEET 76 OF 99

C:\pwworking\sea\d0799528\164479_S48

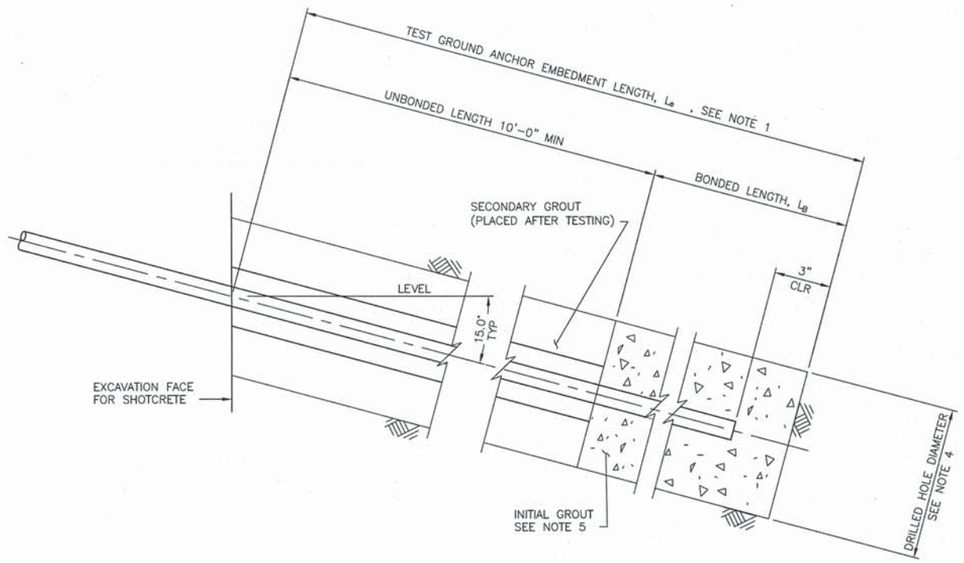

TEST GROUND ANCHOR DETAIL

3

NOTES:

1. THE TEST NAIL BONDED LENGTH L_{eT} , SHALL NOT BE LESS THAN 2/3 OF THE EMBEDMENT LENGTH, L_e, OF ADJACENT PRODUCTION SOIL NAIL ASSEMBLIES, BUT NOT LESS THAN 12'-0".
2. THE TOTAL LENGTH OF THE TEST NAIL ASSEMBLY EQUALS THE EMBEDMENT LENGTH PLUS THE LENGTH REQUIRED FOR JACKING EQUIPMENT.
3. FOR LOCATION OF PROOF TEST NAIL SEE "STRUCTURE PLAN" SHEETS. ADDITIONAL PROOF TEST NAILS WILL BE INSTALLED AND TESTED PER SPECIAL PROVISIONS.
4. CONTRACTOR TO DETERMINE DRILLED HOLE DIAMETER. MINIMUM DIAMETER SHALL BE 8".
5. FINISHED GROUT SURFACE TO BE NORMAL TO THE BAR.
6. REFERENCE: GEOTECHNICAL INVESTIGATION

   MIRABEL FISH SCREEN AND LADDER REPLACEMENT PROJECT
   SONOMA COUNTY, CALIFORNIA

   PROJECT NO. 12225.01
   MARCH 12, 2013

BAR LENGTH ON ORIGINAL DRAWING EQUALS ONE INCH. ADJUST SCALE ACCORDINGLY

HDR Fisheries DESIGN CENTER

NOTE:
THE CONTRACTOR SHALL VERIFY ALL CONTROLLING DIMENSIONS BEFORE ORDERING OF FABRICATING ANY MATERIALS.

REGISTERED PROFESSIONAL ENGINEER
JOHN MARSHALL
No. 40911
Exp. 3-31-15
CIVIL
STATE OF CALIFORNIA
3/18/14

NO.	DATE	REVISION	BY
A	3/17/14	ISSUED FOR BIDS	JAM

SONOMA COUNTY WATER AGENCY

SCALE: AS NOTED
DATE: 3/17/14
DRAWN: JG
REVIEWED:

Sonoma County Water Agency
Mirabel Fish Screen and Fish Ladder Replacement
RETAINING WALL DETAILS NO. 5

FILE NAME: 164479_s49.dwg
CONTRACT NUMBER: ####
DRAWING NUMBER: S49
SHEET 77 OF 99

C:\pwworking\sea\d0799528\\164479_S49

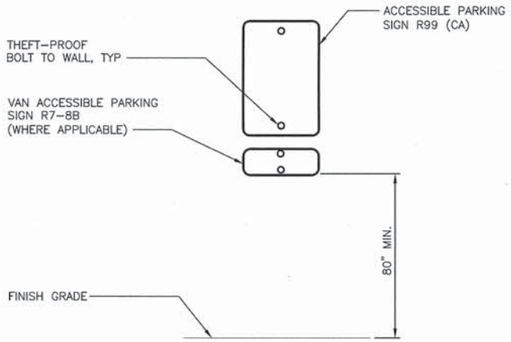

WALL MOUNTED ADA SIGN (2 / A1|A1)
NTS

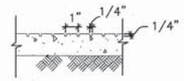

TACTILE WARNING SURFACE (3 / A2|A1)
NTS

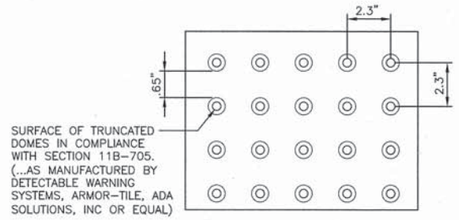

DETECTABLE WARNING (TRUNCATED DOMES) (4 / A2|A1)
NTS

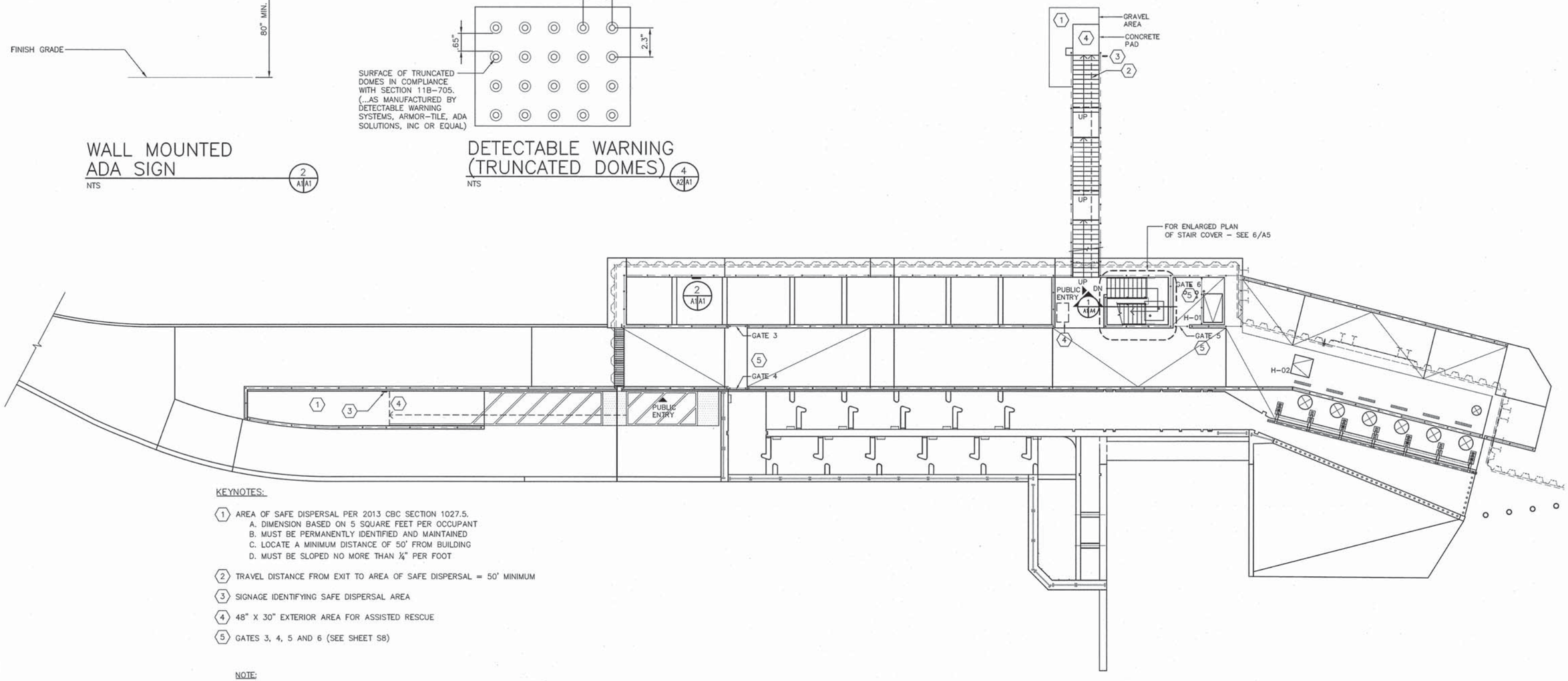

KEYNOTES:

1. AREA OF SAFE DISPERSAL PER 2013 CBC SECTION 1027.5.
   A. DIMENSION BASED ON 5 SQUARE FEET PER OCCUPANT
   B. MUST BE PERMANENTLY IDENTIFIED AND MAINTAINED
   C. LOCATE A MINIMUM DISTANCE OF 50' FROM BUILDING
   D. MUST BE SLOPED NO MORE THAN ¼" PER FOOT
2. TRAVEL DISTANCE FROM EXIT TO AREA OF SAFE DISPERSAL = 50' MINIMUM
3. SIGNAGE IDENTIFYING SAFE DISPERSAL AREA
4. 48" X 30" EXTERIOR AREA FOR ASSISTED RESCUE
5. GATES 3, 4, 5 AND 6 (SEE SHEET S8)

NOTE:

APPLY LIQUID WATER REPELLANT TO ALL EXPOSED INTERIOR AND EXTERIOR CONCRETE SURFACES. SEE SPECIFICATIONS.

TOP DECK FLOOR AND CODE PLAN AREA 1 (1 / A1|A1)

0 4 8 16 FT

SCALE: 3/16"=1'-0"

N

BAR LENGTH ON ORIGINAL DRAWING EQUALS ONE INCH. ADJUST SCALE ACCORDINGLY

HDR Fisheries DESIGN CENTER

LICENSED ARCHITECT VICTOR J. DURAN NO. C 18647 REN. 6/31/15 STATE OF CALIFORNIA 3/17/14

NO.	DATE	REVISION	BY
A	3/17/14	ISSUED FOR BIDS	VD

SONOMA COUNTY WATER AGENCY

SCALE: AS NOTED
DATE: 3/17/14
DRAWN: DTB
REVIEWED:

Sonoma County Water Agency
Mirabel Fish Screen and Fish Ladder Replacement
TOP DECK FLOOR AND CODE PLAN AREA 1

FILE NAME: 164479_a01.dwg
CONTRACT NUMBER: ####
DRAWING NUMBER: A1
SHEET 78 OF 99

C:\pwworking\sea\d0998472\164479_A01

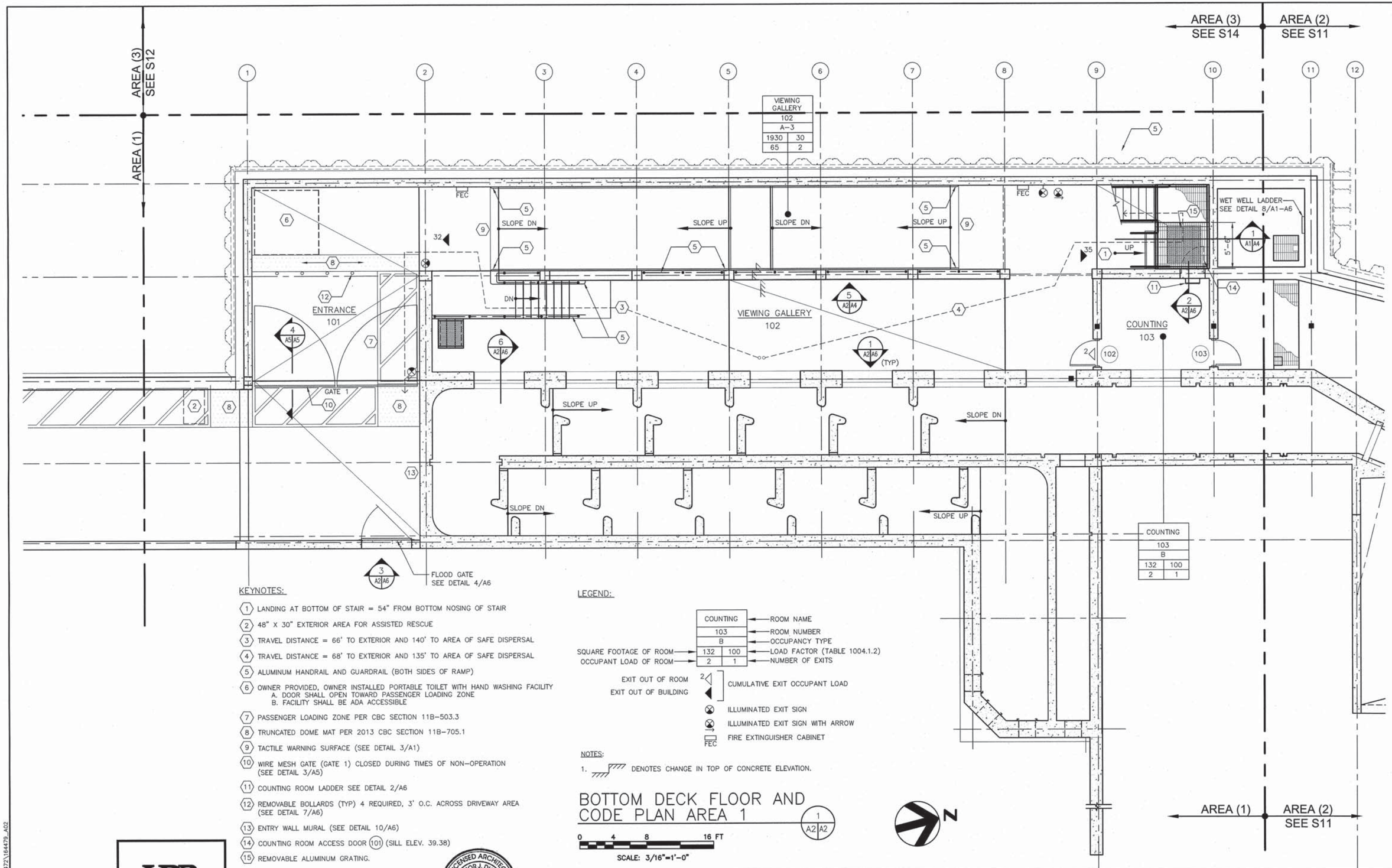

KEYNOTES:

1. LANDING AT BOTTOM OF STAIR = 54" FROM BOTTOM NOSING OF STAIR
2. 48" X 30" EXTERIOR AREA FOR ASSISTED RESCUE
3. TRAVEL DISTANCE = 66' TO EXTERIOR AND 140' TO AREA OF SAFE DISPERSAL
4. TRAVEL DISTANCE = 68' TO EXTERIOR AND 135' TO AREA OF SAFE DISPERSAL
5. ALUMINUM HANDRAIL AND GUARDRAIL (BOTH SIDES OF RAMP)
6. OWNER PROVIDED, OWNER INSTALLED PORTABLE TOILET WITH HAND WASHING FACILITY
   A. DOOR SHALL OPEN TOWARD PASSENGER LOADING ZONE
   B. FACILITY SHALL BE ADA ACCESSIBLE
7. PASSENGER LOADING ZONE PER CBC SECTION 11B-503.3
8. TRUNCATED DOME MAT PER 2013 CBC SECTION 11B-705.1
9. TACTILE WARNING SURFACE (SEE DETAIL 3/A1)
10. WIRE MESH GATE (GATE 1) CLOSED DURING TIMES OF NON-OPERATION (SEE DETAIL 3/A5)
11. COUNTING ROOM LADDER SEE DETAIL 2/A6
12. REMOVABLE BOLLARDS (TYP) 4 REQUIRED, 3' O.C. ACROSS DRIVEWAY AREA (SEE DETAIL 7/A6)
13. ENTRY WALL MURAL (SEE DETAIL 10/A6)
14. COUNTING ROOM ACCESS DOOR (101) (SILL ELEV. 39.38)
15. REMOVABLE ALUMINUM GRATING.

LEGEND:

	COUNTING	ROOM NAME
	103	ROOM NUMBER
	B	OCCUPANCY TYPE
SQUARE FOOTAGE OF ROOM	132	100 — LOAD FACTOR (TABLE 1004.1.2)
OCCUPANT LOAD OF ROOM	2	1 — NUMBER OF EXITS

EXIT OUT OF ROOM — 2
EXIT OUT OF BUILDING — CUMULATIVE EXIT OCCUPANT LOAD

ILLUMINATED EXIT SIGN

ILLUMINATED EXIT SIGN WITH ARROW

FEC — FIRE EXTINGUISHER CABINET

NOTES:

1. DENOTES CHANGE IN TOP OF CONCRETE ELEVATION.

BOTTOM DECK FLOOR AND CODE PLAN AREA 1

(1 / A2 A2)

0 4 8 16 FT

SCALE: 3/16"=1'-0"

N

BAR LENGTH ON ORIGINAL DRAWING EQUALS ONE INCH. ADJUST SCALE ACCORDINGLY

HDR Fisheries DESIGN CENTER

LICENSED ARCHITECT VICTOR J. DURAN NO. C 18,647 EXP. 6/31/15 STATE OF CALIFORNIA 3/17/14

NO.	DATE	REVISION	BY
A	3/17/14	ISSUED FOR BIDS	VD

SONOMA COUNTY WATER AGENCY

SCALE: AS NOTED
DATE: 3/17/14
DRAWN: DTB
REVIEWED:

Sonoma County Water Agency

Mirabel Fish Screen and Fish Ladder Replacement

BOTTOM DECK FLOOR AND CODE PLAN AREA 1

FILE NAME: 164479_a02.dwg
CONTRACT NUMBER: ####
DRAWING NUMBER: A2
SHEET 79 OF 99

C:\pwworking\sea\d0998472\164479_A02

KEYNOTES:

(A) THE CBC PERMITS A-3 OCCUPANCY TO NOT HAVE AUTOMATIC FIRE SPRINKLERS FOR OCCUPANT LOADS OF LESS THAN 300. 67 IS THE TOTAL OCCUPANT LOAD.

GATE, HATCH AND DOOR SCHEDULE

TAG	SIZE	DETAIL	MATL	REMARKS
GATE 1	(2) 9'-7"x6'-2"	3/A2-A5	ALUM	SECURITY GATE (VERIFY DIMENSIONS)
GATE 2	3'-8"x7'-0"	8/A4-A5	ALUM	SECURITY GATE (VERIFY DIMENSIONS)
GATE 3	----	----	ALUM	ACCESS GATE
GATE 4	----	----	ALUM	ACCESS GATE
GATE 5	----	----	ALUM	ACCESS GATE
DOOR 101	2'-8"x2'-8"	----	FRP	FRP FRAME PLUS FISH SCREEN
DOOR 102	3'-0"x7'-0"	----	FRP	FRP FRAME PLUS FISH SCREEN
DOOR 103	3'-0"x7'-0"	----	FRP	FRP FRAME PLUS FISH SCREEN
H-01	4'-0"x6'-0"	8/A1-A6	ALUM	HEAVY DUTY
H-02	4'-0"x4'-0"	5/A1-A6	ALUM	TRAFFIC RATED

(H-01 AND H-02 SEE SPECIFICATION SECTION 08310)

JURISDICTION
COUNTY OF SONOMA
STATE OF CALIFORNIA

APPLICABLE CODES
2013 CALIFORNIA BUILDING CODE (CBC)
2013 CALIFORNIA PLUMBING CODE (CPC)
2013 CALIFORNIA ELECTRICAL CODE (CEC)
2013 CALIFORNIA MECHANICAL CODE (CMC)
2013 CALIFORNIA GREEN BUILDING STANDARD CODE (CGBS)
2013 CALIFORNIA FIRE CODE (CFC)
2013 CALIFORNIA ENERGY CODE (CENC)
NATIONAL FIRE PROTECTION ASSOCIATION (NFPA)
CALIFORNIA OCCUPATIONAL SAFETY AND HEALTH ADMINISTRATION SAFETY AND HEALTH ADMINISTRATION GENERAL INDUSTRY ORDERS (OSHA)
SONOMA COUNTY MUNICIPAL CODE (SCMC)

ASSUMPTIONS
•SINGLE BUILDING ON LOT.
•DESIGNED FOR NO FIRE SPRINKLERS.

OCCUPANCY TABLE

ROOM NO.	ROOM NAME	AREA (SQ. FT.)	OCCUPANCY GROUP
101	VIEWING GALLERY	1930	A3
102	COUNTING	132	B (ACCESSORY TO OCCUPANCY GROUP A3)

TOTAL SQUARE FEET
A3 = 2062 (INCLUDING ACCESSORY)

COMPLIANCE TABLE

SECTION (CBC UNLESS OTHERWISE NOTED)	TOPIC	COMPLIANCE	HDR RECOMMENDATION
303.4	OCCUPANCY TYPE	OCCUPANCY GROUP A-3 FOR THE VIEWING GALLERY.	
304.1	OCCUPANCY TYPE	OCCUPANCY B FOR THE COUNTING ROOM. THIS WILL BE COUNTED AS PART OF OCCUPANCY GROUP A-3 UNDER ACCESSORY PROVISIONS.	
TABLE 503	ALLOWABLE HEIGHTS AND BUILDING AREA	"ONE STORY, 40'HIGH MAX. 6,000 SF MAX. DESIGN COMPLIES."	
SECTION 508.2	ACCESSORY OCCUPANCY	THE COUNTING ROOM (OCCUPANCY GROUP B)IS AN ACCESSORY OCCUPANCY BASED ON IT BEING LESS THAN 10% OF THE MAIN A3 OCCUPANCY. PER 508.2.4, NO OCCUPANCY SEPARATION IS NECESSARY.	
TABLE 601	CONSTRUCTION TYPE	TYPE VB. NO RATED BUILDING SYSTEMS NEEDED.	
TABLE 602	EXTERIOR WALLS	NO EXTERIOR WALLS NEED FIRE PROTECTION. NEAREST PROPERTY LINE OR BUILDING IS GREATER THAN 30'AWAY.	
903.2.1.3 AND SCMC CHAPTER 13 ARTICLE IV	FIRE PROTECTION SYSTEMS	SEE: KEYNOTE A	
907.2.1	FIRE PROTECTION SYSTEMS	THIS BUILDING DOES NOT NEED A FIRE ALARM SYSTEM SINCE IT HAS AN OCCUPANT LOAD OF LESS THAN 300.	
TABLE 1004.1.2	OCCUPANCY LOAD	"EXHIBIT GALLERY AND MUSEUM AT 30SF PER OCCUPANT IS USED FOR THE VIEWING GALLERY. BUSINESS AREA AT 100SF PER OCCUPANT IS USED FOR THE COUNTING ROOM".	
1005.3.1	EGRESS WIDTH	THE STAIRWAY IS 48"BETWEEN HANDRAILS. BASED ON OCCUPANT LOAD, WIDTH COMPLIES. (20.1"MIN. BASED ON OCCUPANT LOAD).	ONE OF THE EGRESS ROUTES INCLUDES A STAIR THAT WILL MAINTAIN A WIDTH OF 48" BETWEEN HANDRAILS.
1006	MEANS OF EGRESS ILLUMINATION	THE WALKING SURFACE OF THE MEANS OF EGRESS SHALL NOT BE LESS THAN 1 FOOTCANDLE AT ALL TIMES. EMERGENCY POWER SHALL BE PROVIDED FOR IN THE EVENT OF NORMAL POWER FAILURE.	IF SUCH LIGHTING IS NOT FEASIBLE, AND WHEN NATURAL LIGHT IS UNAVAILABLE TO ACHIEVE THIS STANDARD, HDR SUGGESTS THAT THE FACILITY BE CLOSED TO THE PUBLIC DURING SUCH TIMES.
1007.7	MEANS OF EGRESS	"AN EXTERIOR AREA OF ASSISTED RESCUE SHALL BE LOCATED AT THE BASE OF THE EGRESS STAIR. THIS IS CONSIDERED AN OUTDOOR FACILITY AND UNDER THE PROVISION OF SECTION 1007.7.2. THIS DESIGN IS COUNTING ON ACCEPTANCE BY THE ENFORCING AGENCY OF SECTION 1007.6.1 EXCEPTION STATING THAT THE SIZE OF THE AREA MAY BE FOR ONE WHEELCHAIR". STAIRWAY HAS MINIMUM 48"WIDTH BETWEEN HANDRAILS. SIGNAGE IDENTIFYING "EXTERIOR AREA FOR ASSISTED RESCUE". INSTRUCTIONS SHALL BE POSTED FOR THE USE OF EXTERIOR AREA FOR ASSISTED RESCUE UNDER EMERGENCY CONDITIONS. SEE SECTION 1007.11.	A 48"X30"EXTERIOR AREA OF ASSISTED RESCUE WILL BE MARKED OUT NEAR THE BOTTOM OF THE STAIRWAY. IT WILL HAVE SIGNAGE NEARBY ON THE WALL OR SECURITY SCREEN.

COMPLIANCE TABLE

SECTION (CBC UNLESS OTHERWISE NOTED)	TOPIC	COMPLIANCE	HDR RECOMMENDATION
1011	EXIT SIGNAGE	"EXIT SIGNAGE SHALL INCLUDE TACTILE SIGNAGE THAT INCLUDE BRAILLE, AND ILLUMINATED EXIT SIGNS. THERE SHALL BE A 90 MINUTE POWER SOURCE FOR ILLUMINATED EXIT SIGNS. SEE SECTIONS 1011.4 AND 1011.6".	"TWO TYPES OF EXIT SIGNS SHALL BE PROVIDED. ONE WILL BE MOUNTED ON THE WALLS AND HAVE RAISED LETTERING AND BRAILLE. THE OTHER WILL ILLUMINATED EXIT SIGNS. THE ILLUMINATED EXIT SIGNS SHALL HAVE THE ABILITY TO REMAIN ILLUMINATED FOR A MINIMUM TIME OF 90 MINUTES AFTER POWER FAILURE OCCURS".
1012	HANDRAILS	"•HANDRAILS ARE ON BOTH SIDES OF RAMPS AND STAIRWAY. •34"TO 38"ABOVE NOSING OR RAMP. •TYPE I HANDRAILS ARE PROVIDED •MIN. 1 1/2"CLEAR OF ADJACENT WALL."	
1013	GUARDS	"GUARDS ARE: •WHERE ADJACENT GRADE, LANDING, STAIR, ETC IS 30" OR GREATER VERTICALLY, AND LESS THAN 36"HORIZONTALLY. •42"MINIMUM HEIGHT •4"DIAMETER MAY NOT PASS THROUGH."	VERTICAL BALUSTRADES WILL HELP TO KEEP CHILDREN FROM CLIMBING OVER GUARDS.
TABLE 1014.3	EGRESS	COMMON PATH OF EGRESS TRAVEL COMPLIES. MAXIMUM IS 75'. MOST IN THIS FACILITY IS 15'AT COUNTING ROOM. DESIGN COMPLIES.	TWO EXITS ARE REQUIRED OUT OF THE EXHIBIT SPACE, ONE EXIT OUT OF THE COUNTING ROOM. THE COUNTING ROOM EXIT GO INTO EXHIBIT SPACE. AN ADDITIONAL EXIT VIA LADDER TO A HATCH WILL BE PROVIDED FOR USE WHEN OCCUPANTS ARE TRAPPED IN THE COUNTING ROOM; THIS IS NOT A CODE REQUIREMENT, BUT MAKES GOOD SENSE GIVEN THE USE AND RISK OF FLOODING.
1015.2.1	EGRESS	ARRANGEMENT OF TWO EXIT COMPLIES SINCE THEY ARE FARTHER APART THAN HALF THE DIAGONAL.	
TABLE 1016.2	EGRESS	DISTANCE TO EGRESS COMPLIES. ALL PARTS OF THE BUILDING MAY EXIT IN LESS THAN THE MAXIMUM 200'.	ALL TRAVEL DISTANCES CHECK OUT TO LESS THAN 200'.
1027.5	EGRESS	A PATHWAY TO AN AREA OF SAFE DISPERSAL IS PROVIDED FOR EACH EXIT PER EXCEPTION. NOTE THAT AN AREA OF SAFE DISPERSAL MUST PROVIDE AT LEAST 5 SQUARE FEET PER OCCUPANT AND IDENTIFIED.	TWO AREAS OF SAFE DISPERSAL ARE PROVIDED. ONE AT THE LOWEST LEVEL ALONG THE ENTRANCE ROAD, THE OTHER AT THE TOP OF THE STAIRS.
TABLE 11B-208.2	PARKING	"IF THERE ARE 25 SPACES PROVIDED, ONE MUST BE ACCESSIBLE. IF THERE ARE BETWEEN 26 AND 50 SPACES PROVIDED, TWO MUST BE ACCESSIBLE".	
11B-302.3	ADA	OPENINGS IN GROUND OR FLOOR MAY NOT BE WIDER THAN THAT WHICH WOULD ALLOW A 1/2"SPHERE TO TRAVEL THROUGH.	1/2"SLOTS IN DRAINS, TREADS AND FLOOR SHALL PREVENT HIGH HEEL SHOE WEAR FROM GETTING CAUGHT. DRAINS WILL BE REQUIRED TO PREVENT WATER ACCUMULATION ON WALKING SURFACES.

COMPLIANCE TABLE

SECTION (CBC UNLESS OTHERWISE NOTED)	TOPIC	COMPLIANCE	HDR RECOMMENDATION
FIGURE 11B-307.4	ADA	A BARRIER SUCH AS A GUARD SHALL BE PLACED UNDER THE STAIR SUCH THAT AN 80"HEAD HEIGHT MAY BE MAINTAINED.	THIS CODE SECTION ADDRESSES HEAD CLEARANCE FOR THE VISUALLY IMPAIRED. THERE WILL BE A BARRIER UNDER THE STAIRWAY DETECTABLE BY CANE THAT WILL PREVENT ACCIDENTAL HEAD INJURY.
FIGURE 11B-405.7	ADA	"•RAMPS: BOTTOM LANDING IS A MINIMUM OF 72"LONG BY WIDTH OF RAMP. •INTERMEDIATE LANDING IS A MINIMUM OF 48"BY THE WIDTH OF THE RAMP. •TOP LANDING IS MINIMUM 60"X60". •CLEAR WIDTH IS 48"MINIMUM. DESIGN COMPLIES. •RISE MAY NOT BE MORE THAN 30"WITHOUT LANDING. •MAXIMUM SLOPE =1:12 RUNNING SLOPE AND 1:48 CROSS SLOPE. •EDGE PROTECTION OR CURB RISING UP FROM RAMP AND LANDINGS AT HAND RAIL".	
11B-502	ADA	ACCESSIBLE PARKING SPACES SHALL COMPLY WITH THIS SECTION AND IN QUANTITY CONSISTENT WITH TABLE 11B-208.2.	THESE PARKING SPACES SHALL BE PROVIDED AT A RATE INDICATED ON TABLE 11B-208.2.
11B-503	ADA	ACCESSIBLE PASSENGER LOADING ZONE SHALL COMPLY WITH THIS SECTION.	THE PASSENGER LOADING SHALL BE MARKED OUT ON THE PAVEMENT BETWEEN WHERE THE VEHICLE WILL TEMPORARILY PARK AND THE EXHIBIT SPACE.
11B-504	ADA	"STAIRS •OPEN RISERS NOT PERMITTED. •A TWO INCH WIDE STRIPE ONE INCH FROM THE NOSING IN A CONTRASTING COLOR SHALL BE ON EACH STEP SINCE THIS IS CONSIDERED AN OUTDOOR STAIR. •1/2"RADIUS AS NOSINGS •STAIRS SHALL NOT ALLOW ACCUMULATION OF WATER".	
11B-505	ADA	"HANDRAILS •34"TO 38"FROM TOP OF RAIL TO NOSING OF STAIR OR RAMP. •1 1/2"CLEARANCE BETWEEN HAND RAIL AND WALL. •1 1/2"DIAMETER HAND RAIL. •12"HAND RAIL EXTENTIONS TOP AND BOTTOM OF RAMP AND AT TOP OF STAIR. •12"PLUS TREAD DEPTH AT BOTTOM OF STAIR".	
11B-601	ADA	PORTABLE TOILETS COMPLIANT WITH THIS SECTION SHALL BE PROVIDED BY SONOMA COUNTY WATER AGENCY.	
TABLE 1505.1	ROOF CLASSIFICATION	MINIMUM ROOF COVERING CLASSIFICATION FOR PORTION OF BUILDING THAT IS ROOFED SHALL BE MINIMUM CLASS C FIRE CLASSIFICATION. SINCE THE ROOF IS REINFORCED CONCRETE, THIS COMPLIES WITH THE HIGHER CLASS A FIRE CLASSIFICATION.	
"2010 CPC TABLE 401 AND TABLE A (CHECK AGAIN WHEN IN RECEIPT OF 2013 EDITION)".	FIXTURE COUNT	"MALE: 1 TOILET; 1 URINAL; 1 LAVATORY FEMALE: 3 TOILETS; 1 LAVATORY 1 DRINKING FOUNTAIN. PER SECTION 412.3, UNISEX IS NOT PERMITTED IN SATISFYING MINIMUM REQUIREMENTS".	"AT THE PARKING LOT, THERE WILL BE PROVIDED ONE ADA ACCESSIBLE PORTABLE TOILET WITH A TOILET AND URINAL LABELED "MEN". THERE WILL ALSO BE PROVIDED ONE ADA ACCESSIBLE PORTABLE TOILET, AND TWO TOILETS DESIGNED FOR ABLE BODIED VISITORS EACH LABELED "WOMEN". EACH GENDER SHALL HAVE ONE EXTERIOR HAND WASHING STATION WITH AMPLE WASTE PAPER RECEPTACLES. ONE ADA ACCESSIBLE TOILET SHALL BE PROVIDED AT THE ENTRANCE ROAD AREA OF SAFE DISPERSAL. THIS WILL BE UNISEX AND WILL ALSO BE ACCOMPANIED BY AN EXTERIOR HAND WASHING STATION WITH AMPLE WASTE PAPER RECEPTACLES. A TEMPORARY WATER COOLER SHALL BE PROVIDED BY SONOMA COUNTY WATER AGENCY IN LIEU OF A DRINKING FOUNTAIN. THIS SHALL BE PLACED SOMEWHERE INSIDE THE BUILDING".

LICENSED ARCHITECT
VICTOR J. DURAN
NO. C 18662
EXP. 6/31/15
STATE OF CALIFORNIA
3/17/14

NO.	DATE	REVISION	BY
A	3/17/14	ISSUED FOR BIDS	VD

SONOMA COUNTY WATER AGENCY

SCALE: AS NOTED
DATE: 3/17/14
DRAWN: DTB
REVIEWED:

Sonoma County Water Agency
Mirabel Fish Screen and Fish Ladder Replacement
ARCHITECTURAL CODE COMPLIANCE NOTES

FILE NAME: 164479_a03.dwg
CONTRACT NUMBER: ####
DRAWING NUMBER: A3

HDR Fisheries DESIGN CENTER

BAR LENGTH ON ORIGINAL DRAWING EQUALS ONE INCH. ADJUST SCALE ACCORDINGLY

C:\pwworking\sea\d0998472\164479_A03

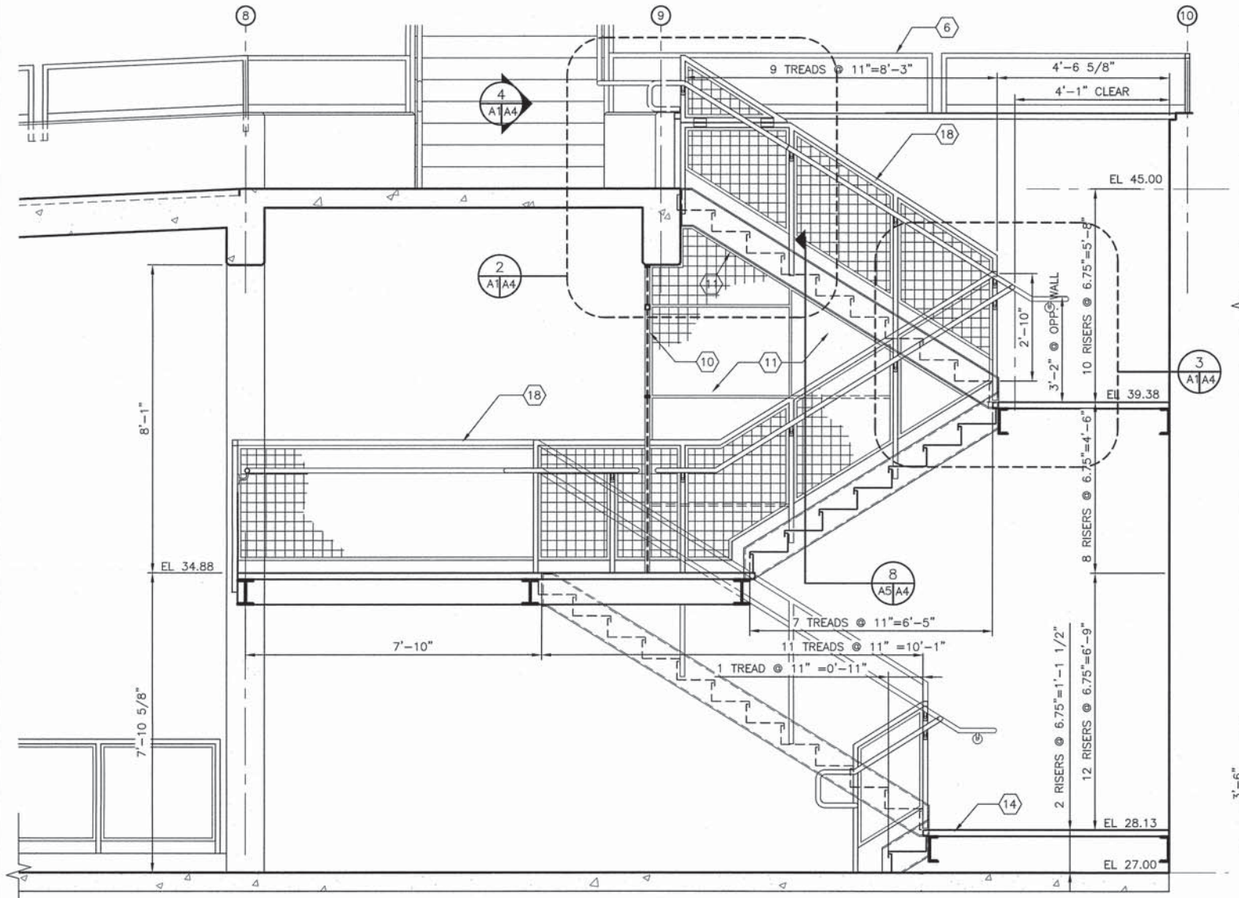

ENTRY STAIR

SCALE: 1/2"=1'-0"

1 A1|A4

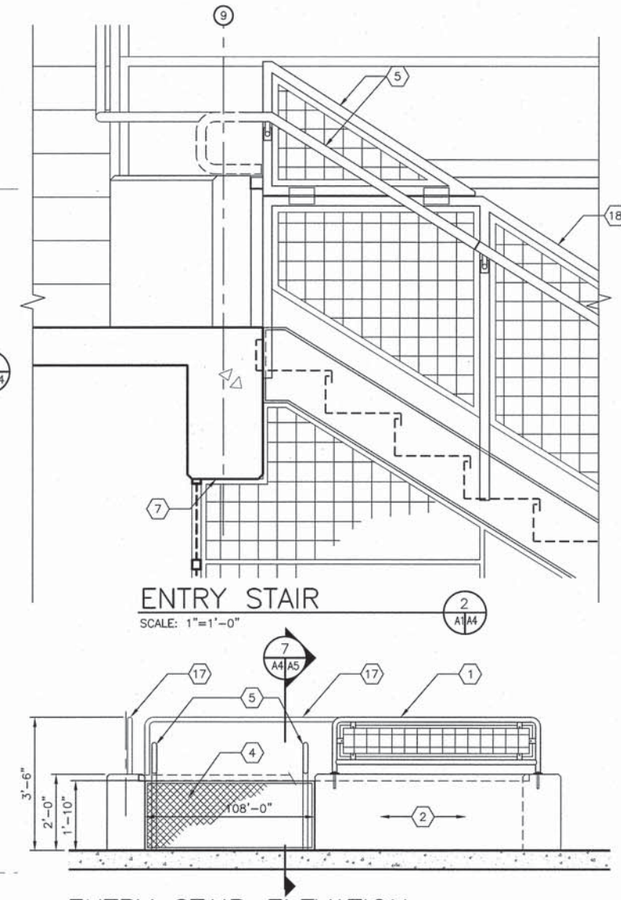

ENTRY STAIR ELEVATION SEASONAL COVER

SCALE: 1/2"=1'-0"

4 A1|A4

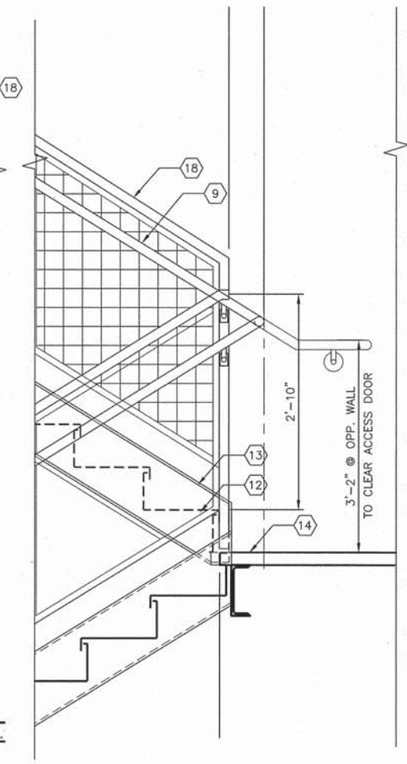

ENTRY STAIR

SCALE: 1"=1'-0"

3 A1|A4

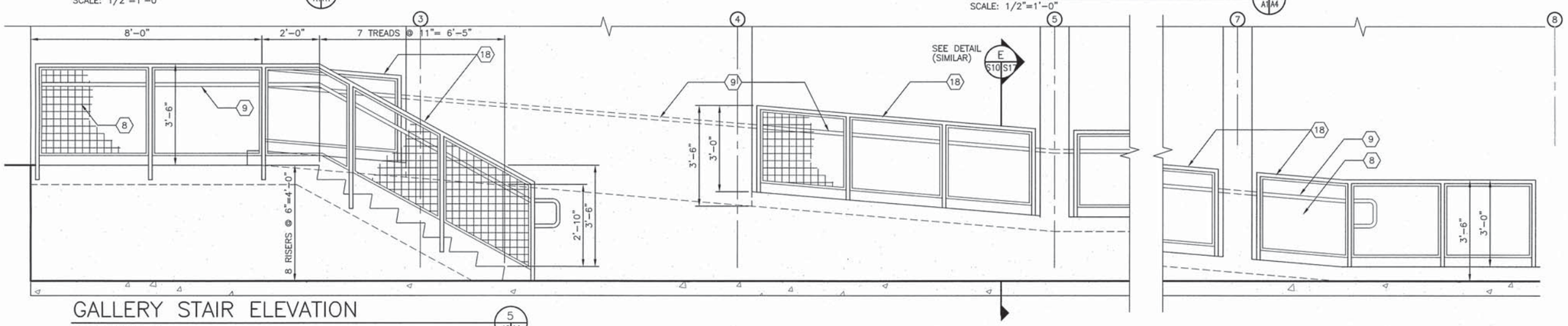

GALLERY STAIR ELEVATION

SCALE: 1/2"=1'-0"

5 A2|A4

KEY NOTES:

1. REMOVABLE GUARDRAIL WITH 4" X 4" X 1/8" MESH INFILL. (REMOVABLE TYPE 3) SEE DETAIL 7/A5
2. CONCRETE WALL
3. SEASONAL SECURITY PANELS SEE DETAIL 7/A5
4. STAIR OPENING REMOVABLE SECURITY PANEL SEE DETAIL 7/A5
5. REMOVABLE OR HINGED RAILING SECTION
6. GUARDRAIL AND MESH INFILL BEYOND
7. CONCRETE BEAM
8. ALUMINUM GUARDRAIL WITH 4" X 4" X 1/8" ALUMINUM MESH INFILL. SEE DETAIL 4/S7
9. ALUMINUM HANDRAIL BOTH SIDES OF RAMP OR STAIR. ATTACH TO WALL AT WEST SIDE OF RAMP.
10. 4" X 4" X 1/8" ALUMINUM WIRE MESH SECURITY ENCLOSURE AND GATE 2. SEE DETAIL 8/A5
11. HORIZONTAL ALUMINUM FRAMING W/ WIRE MESH CLOSURE TO STAIR STRINGER. SEE DETAIL 8/A5
12. ALUMINUM STAIR RISER AND NON-SLIP, PUNCHED GRATING TREAD.
13. ALUMINUM STRINGER
14. REMOVABLE ALUMINUM LANDING SEE SHEET A2
15. REMOVABLE ALUM. WIRE MESH SECURITY PANELS. SEE DETAIL 9/A5
16. NOT USED
17. ALUMINUM RAILING BEYOND (REMOVABLE TYPE 3) SEE DETAIL 3/S7
18. GUARDRAIL TYPE 4 (WITH HANDRAIL) SEE DETAIL 4/S7

BAR LENGTH ON ORIGINAL DRAWING EQUALS ONE INCH. ADJUST SCALE ACCORDINGLY

HDR Fisheries DESIGN CENTER

LICENSED ARCHITECT VICTOR J. DURAN NO. C 18447 STATE OF CALIFORNIA 3/17/14

NO.	DATE	REVISION	BY
A	3/17/14	ISSUED FOR BIDS	VD

SONOMA COUNTY WATER AGENCY

SCALE: AS NOTED | DATE: 3/17/14
DRAWN: DTB
REVIEWED:

Sonoma County Water Agency

Mirabel Fish Screen and Fish Ladder Replacement

TYPICAL STAIR AND RAILING DETAILS

FILE NAME: 164479_a04.dwg
CONTRACT NUMBER: ####
DRAWING NUMBER: A4

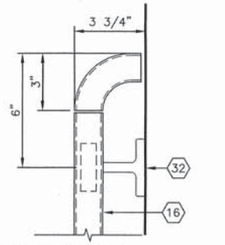

HANDRAIL AT WALL (1 / A2 A5)
SCALE: 3"=1'-0"

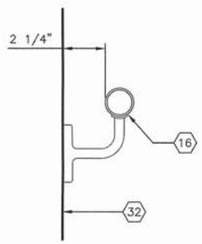

TYPICAL HANDRAIL (2 / A2 A5)
SCALE: 3"=1'-0"

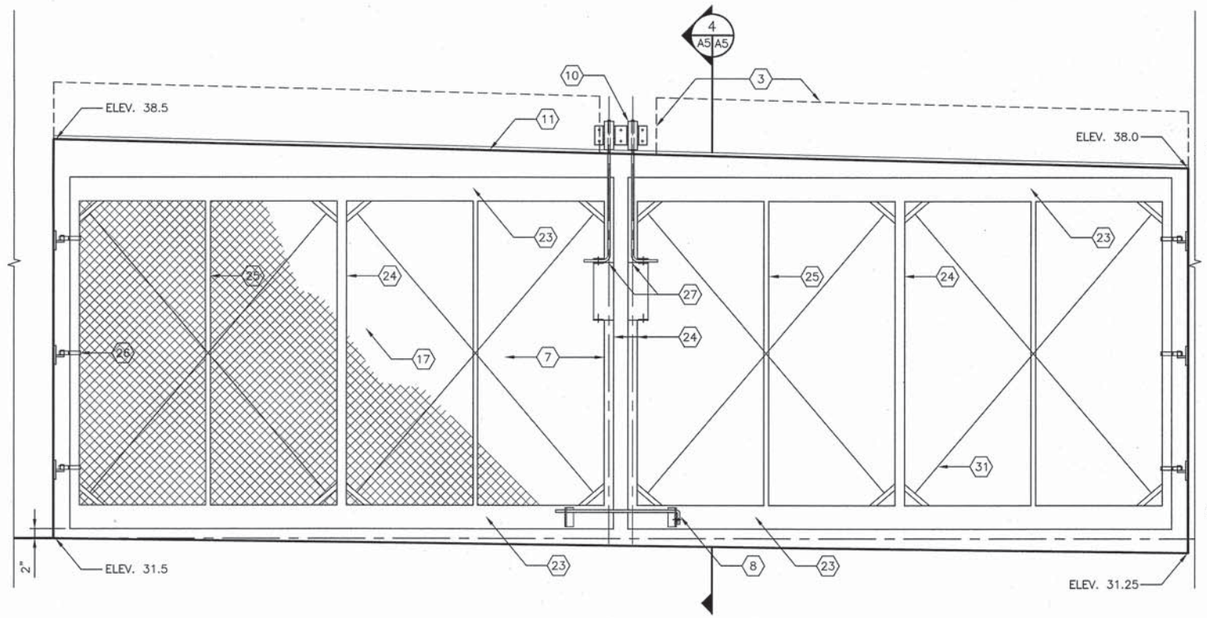

SECURITY GATE 1 (3 / A2 A5)
SCALE: 3/4"=1'-0"

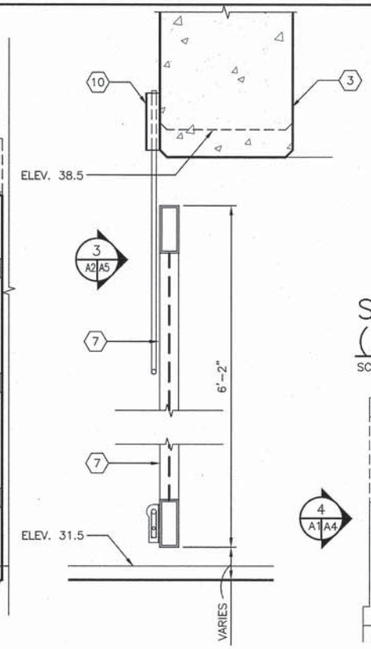

SECURITY GATE 1 (4 / A5 A5)
SCALE: 1-1/2"=1'-0"

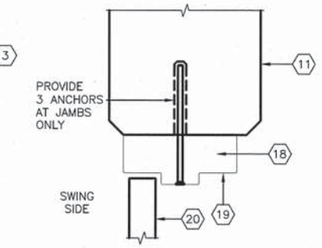

SECURITY DOOR JAMB (HEAD SIMILAR) (5 / A2 A5)
SCALE: 3"=1'-0"

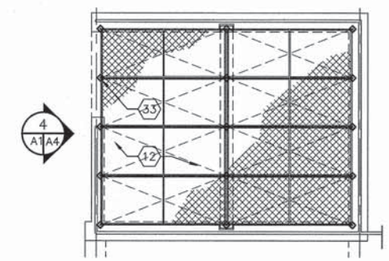

SEASONAL COVER (9 / A5 A5)
SCALE: 1-1/2"=1'-0"

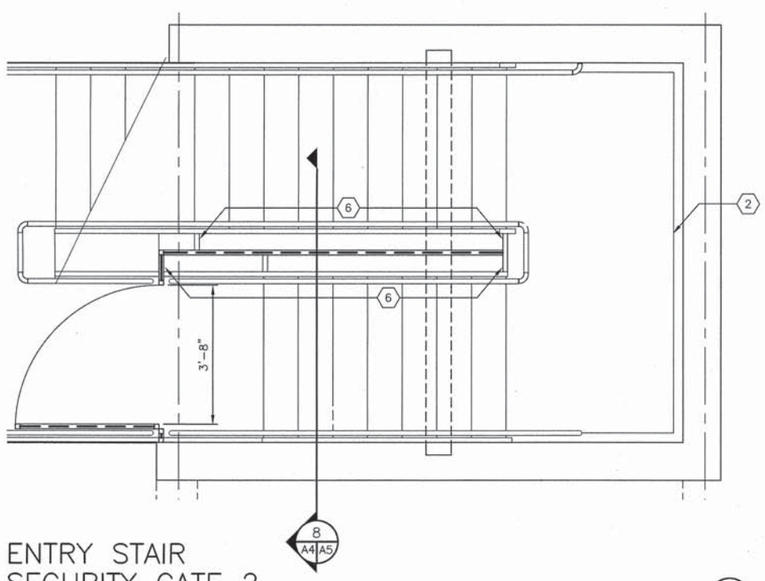

ENTRY STAIR SECURITY GATE 2 (6 / A1 A5)
SCALE: 1/2"=1'-0"

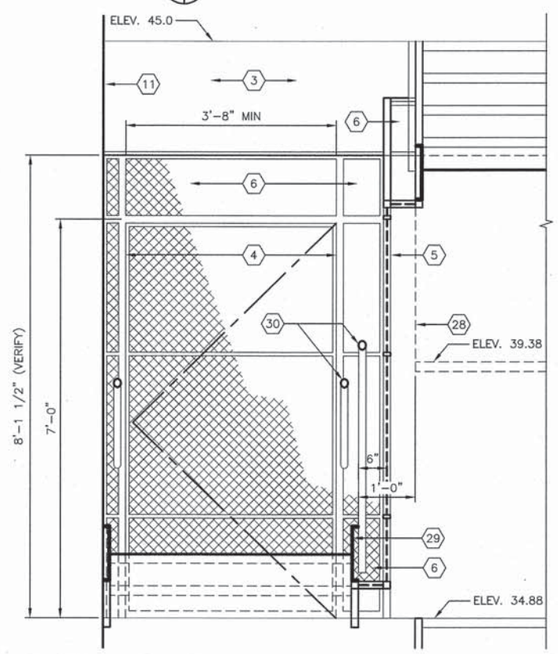

ENTRY STAIR SECURITY GATE 2/ ENCLOSURE (8 / A4 A5)
SCALE: 3/4"=1'-0"

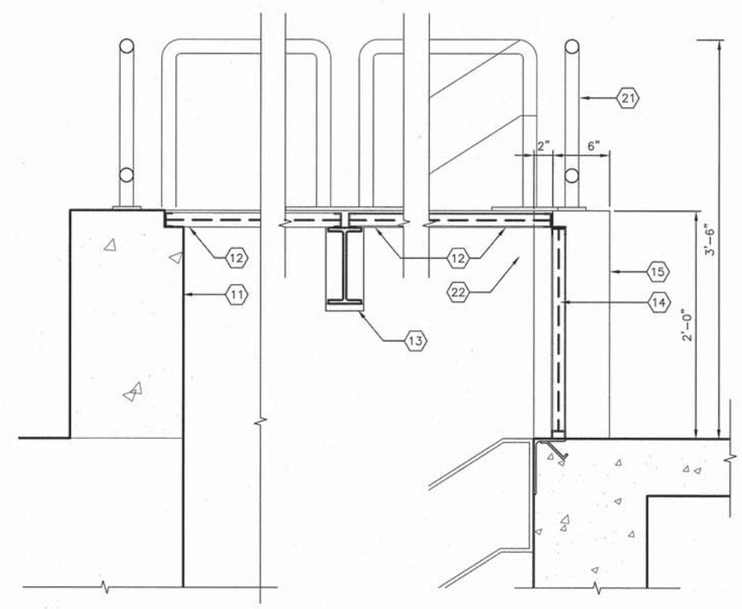

ENTRY STAIR REMOVABLE SEASONAL COVER AND GUARDRAIL (7 / A5 A5)
SCALE: 1-1/2"=1'-0"

KEY NOTES:

1. ALUMINUM GRATING
2. GRATING SUPPORT BEAM
3. CONCRETE BEAM
4. ALUMINUM SECURITY GATE 2 W/ FISH RATED ALUMINUM WIRE MESH INFILL
5. ALUMINUM WIRE MESH PARTITION. CENTERED BETWEEN STAIR STRINGERS. PROVIDE HORIZONTAL CLOSURE MESH AND FRAMING AT TOP AND BOTTOM BETWEEN PARTITION AND STRINGERS
6. ALUMINUM WIRE MESH INFILL TO UNDERSIDE OF STRINGER
7. ALUMINUM SECURITY GATE W/ FISH RATED WIRE MESH INFILL. 2 LEAVES AT 9'-7"(W) X 6'-2"(H)
8. HORIZONTAL BOLT WITH ALUMINUM STRIKE.
9. BOTTOM OF CONCRETE BEAM
10. 4" LONG X 1-1/2" DIA ALUM. PIPE TO RECEIVE GATE LATCH BOLT. ATTACH TO FACE OF BEAM
11. CONCRETE WALL
12. REMOVABLE ALUMINUM WIRE SECURITY PANELS, 2'-7" X 6'-7 1/2" WITH 3/4" X 1-1/2" ALUMINUM FRAME. 8 REQUIRED. SEE DETAIL 9/A5
13. REMOVABLE ALUMINUM BEAM (SEE DETAIL 3/S30)
14. REMOVABLE ALUMINUM WIRE SECURITY PANEL ACROSS STAIR OPENING. SEE DETAIL 4/A4
15. CONCRETE WALL (BEYOND)
16. 1-1/2" DIA SCH 40 ALUMINUM PIPE HANDRAIL
17. FISH RATED ALUMINUM WIRE MESH INFILL
18. GROUT
19. FRP SECURITY DOOR FRAME
20. FRP SECURITY DOOR
21. REMOVABLE GUARDRAIL WITH 4" X 4" X 1/8" MESH INFILL. (TYPE 3) SEE DETAIL 3/S7
22. NOT USED
23. 2" X 5" ALUMINUM TUBE (TOP AND BOTTOM PRIMARY MEMBER)
24. 2" X 2" ALUMINUM TUBE
25. 1" X 2" ALUMINUM TUBE
26. HINGE ASSEMBLY
27. LATCH BOLT AND/OR DROP BOLT ASSEMBLY
28. LINE OF STAIR STRINGER FROM TOP FLOOR
29. STAIR STRINGER FROM UPPER LANDING
30. GUARDRAIL AND HANDRAIL (TYPICAL)
31. 3/16" STAINLESS STEEL TENSION CABLE AND BRACKET
32. LINE OF WALL OR GUARDRAIL
33. 3" X 3" X 1/8" ALUMINUM HOLD DOWN CLIPS. BOLT TO SUPPORT FRAME.

BAR LENGTH ON ORIGINAL DRAWING EQUALS ONE INCH. ADJUST SCALE ACCORDINGLY

HDR Fisheries DESIGN CENTER

LICENSED ARCHITECT VICTOR J. DURAN NO. C 18547 REN. 6/30/15 STATE OF CALIFORNIA 3/17/14

NO.	DATE	REVISION	BY
A	3/17/14	ISSUED FOR BIDS	VD

SONOMA COUNTY WATER AGENCY

SCALE: AS NOTED
DATE: 3/17/14
DRAWN: DTB
REVIEWED:

Sonoma County Water Agency
Mirabel Fish Screen and Fish Ladder Replacement
ARCHITECTURAL DETAILS

FILE NAME: 164479_a05.dwg
CONTRACT NUMBER: ####
DRAWING NUMBER: A5
SHEET 82 OF 99

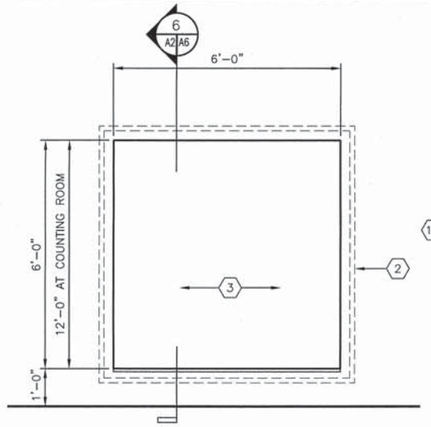

OBSERVATION WINDOW (1 / A2 A6)
SCALE: 1/2"=1'-0"

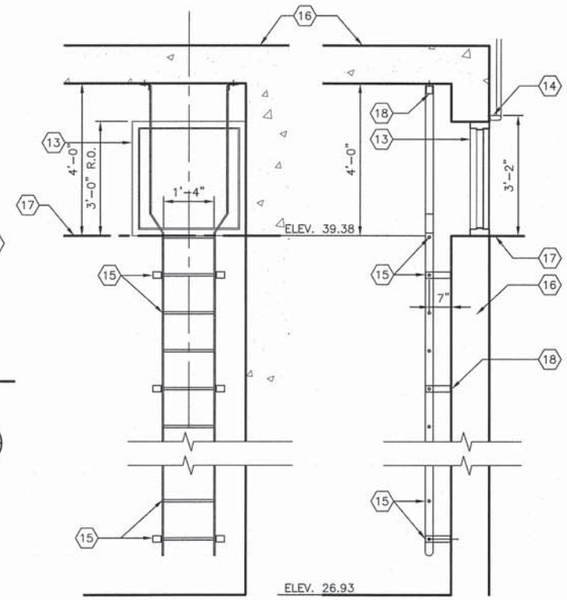

COUNTING ROOM LADDER (2 / A2 A6)
SCALE: 1/2"=1'-0"

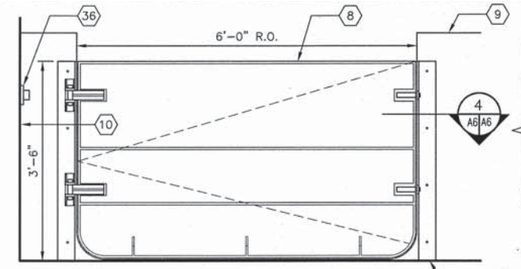

FLOOD GATE (3 / A2 A6)
SCALE: 3/4"=1'-0"

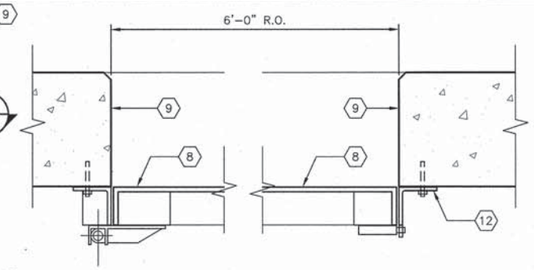

FLOOD GATE PLAN (4 / A6 A6)
SCALE: 1-1/2"=1'-0"

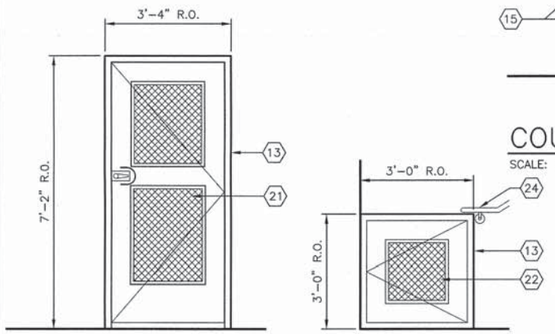

DOOR-102 (103 SIM) ACCESS DOOR-101
COUNTING ROOM DOORS (9 / A2 A6)
SCALE: 1/2"=1'-0"

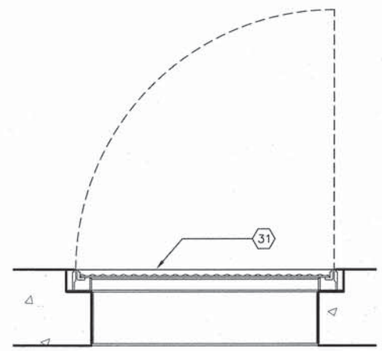

TRAFFIC RATED ACCESS HATCH H-02 (5 / A1 A6)
SCALE: 1"= 1'-0"

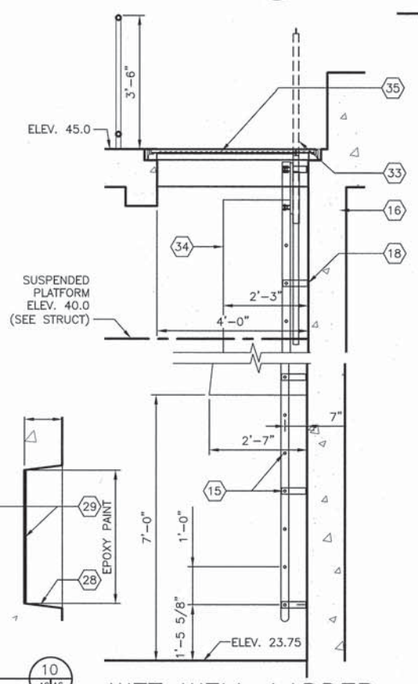

WET WELL LADDER (8 / A1 A6)
SCALE: 1/2"=1'-0"

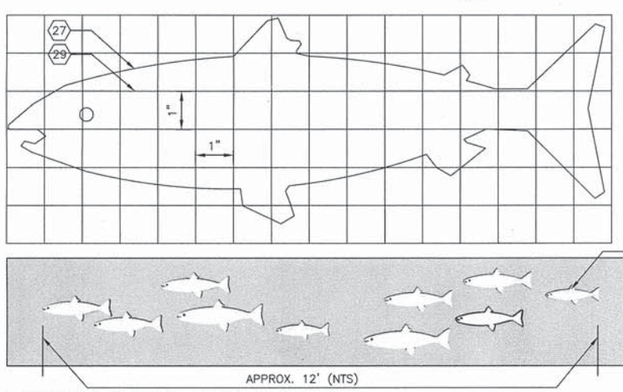

ENTRY WALL MURAL (10 / A2 A6)
NTS

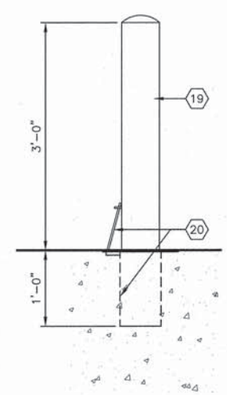

REMOVABLE BOLLARD (7 / A2 A6)
SCALE: 1-1/2"=1'-0"

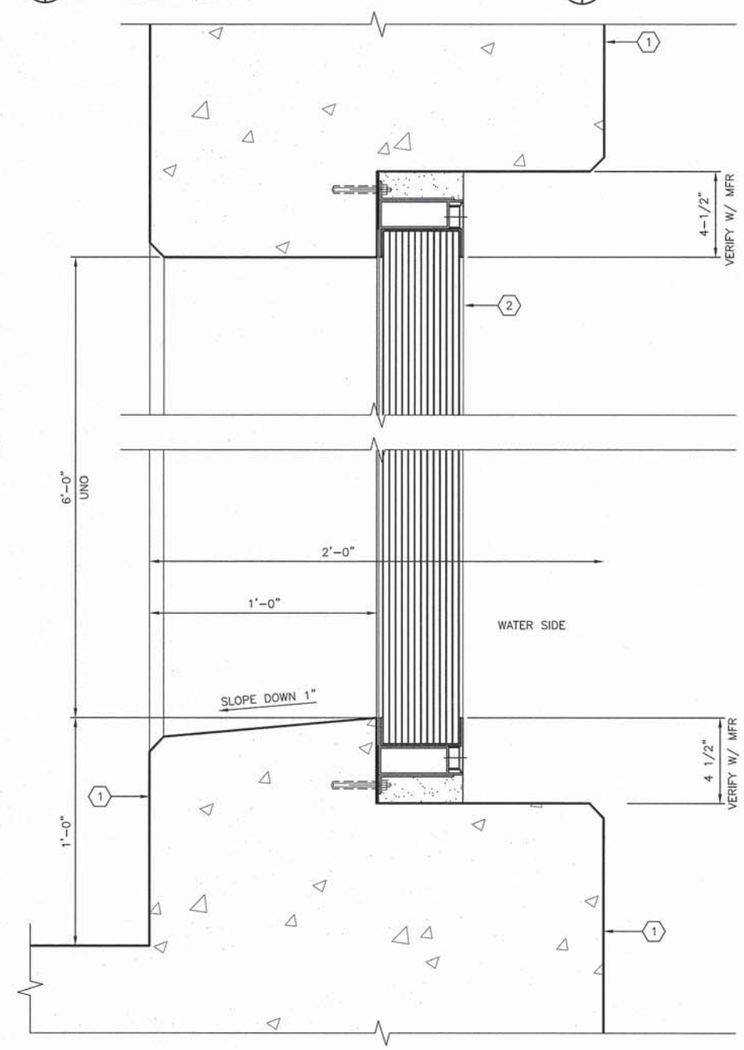

OBSERVATION WINDOW (6 / A2 A6)
SCALE: 3"=1'-0"

KEY NOTES:

1. CONCRETE WALL
2. UNDERWATER OBSERVATION WINDOW (DETAIL AND THICKNESS PER MANUFACTURERS RECOMMENDATIONS)
3. NOT USED
4. NOT USED
5. NOT USED
6. NOT USED
7. NOT USED
8. SINGLE LEAF ALUMINUM FLOOD GATE W/ PNEUMATIC SEALS
9. TOP OF CONCRETE RETAINING WALL ELEV 35.00
10. FACE OF CONCRETE WALL
11. TOP OF CONCRETE DRIVEWAY. APPROX. ELEV. 31.07
12. ALUMINUM ANGLE FRAME BY FLOOD GATE MANUFACTURER (PRESRAY FB44 OR EQUAL)
13. FIBERGLAS DOOR AND FRAME, GEL COAT FINISH
14. TOP OF STAIR RAILING
15. PRE-FABRICATED ALUMINUM LADDER, RUNGS AND SUPPORT ANGLES (PER SPEC)
16. CONCRETE FLOOR SLAB AND/OR WALL
17. STAIR LANDING FLOOR LINE ELEV 39.38
18. ANCHOR BOLT BRACKET TO WALL AND/OR BOTTOM OF FLOOR SLAB
19. REMOVABLE PIPE BOLLARD CAL PIPE SS06040 SCH 40 STAINLESS STEEL.
20. EMBEDMENT SLEEVE (BY BOLLARD MFR) AND HINGED LID (LOCK BY OWNER)
21. FIBERGLASS FRAME DOOR WITH FLAT PANEL FISH SCREEN MATERIAL, SCREEN INTEGRATED INTO DOOR
22. FIBERGLASS EMERGENCY ESCAPE DOOR WITH FLAT PANEL FISH SCREEN MATERIAL, SCREEN INTEGRATED INTO DOOR
23. NOT USED
24. TOP OF HANDRAIL (38" AFF)
25. NOT USED
26. NOT USED
27. FISH PROFILE CAST IN CONCRETE WALL PER APPROVED PLAN BY OWNER.
28. PROVIDE 1/4" EDGE DRAFT FOR FORM REMOVAL
29. FISH IMAGE CAST IN CONCRETE, PER APPROVED PLAN BY OWNER.
30. NOT USED
31. ALUMINUM TRAFFIC RATED ACCESS HATCH
32. NOT USED
33. LADDER SAFETY POST
34. BASKET GUARD PER OSHA REQUIREMENTS
35. 4'-0" X 6'-0" HEAVY DUTY HATCH H-01
36. PROVIDE WALL MTD. LOCKING HOLD OPEN LATCH BY FLOOD GATE MFR.

BAR LENGTH ON ORIGINAL DRAWING EQUALS ONE INCH. ADJUST SCALE ACCORDINGLY

HDR Fisheries DESIGN CENTER

LICENSED ARCHITECT VICTOR J. DURAN NO. C 18647 EXP. 6/30/15 STATE OF CALIFORNIA 3/17/14

NO.	DATE	REVISION	BY
A	3/17/14	ISSUED FOR BIDS	VD

SONOMA COUNTY WATER AGENCY

SCALE: AS NOTED
DATE: 3/17/14
DRAWN: DTB
REVIEWED:

Sonoma County Water Agency
Mirabel Fish Screen and Fish Ladder Replacement
ARCHITECTURAL DETAILS

FILE NAME: 164479_a06.dwg
CONTRACT NUMBER: ####
DRAWING NUMBER: A6
SHEET 83 OF 99

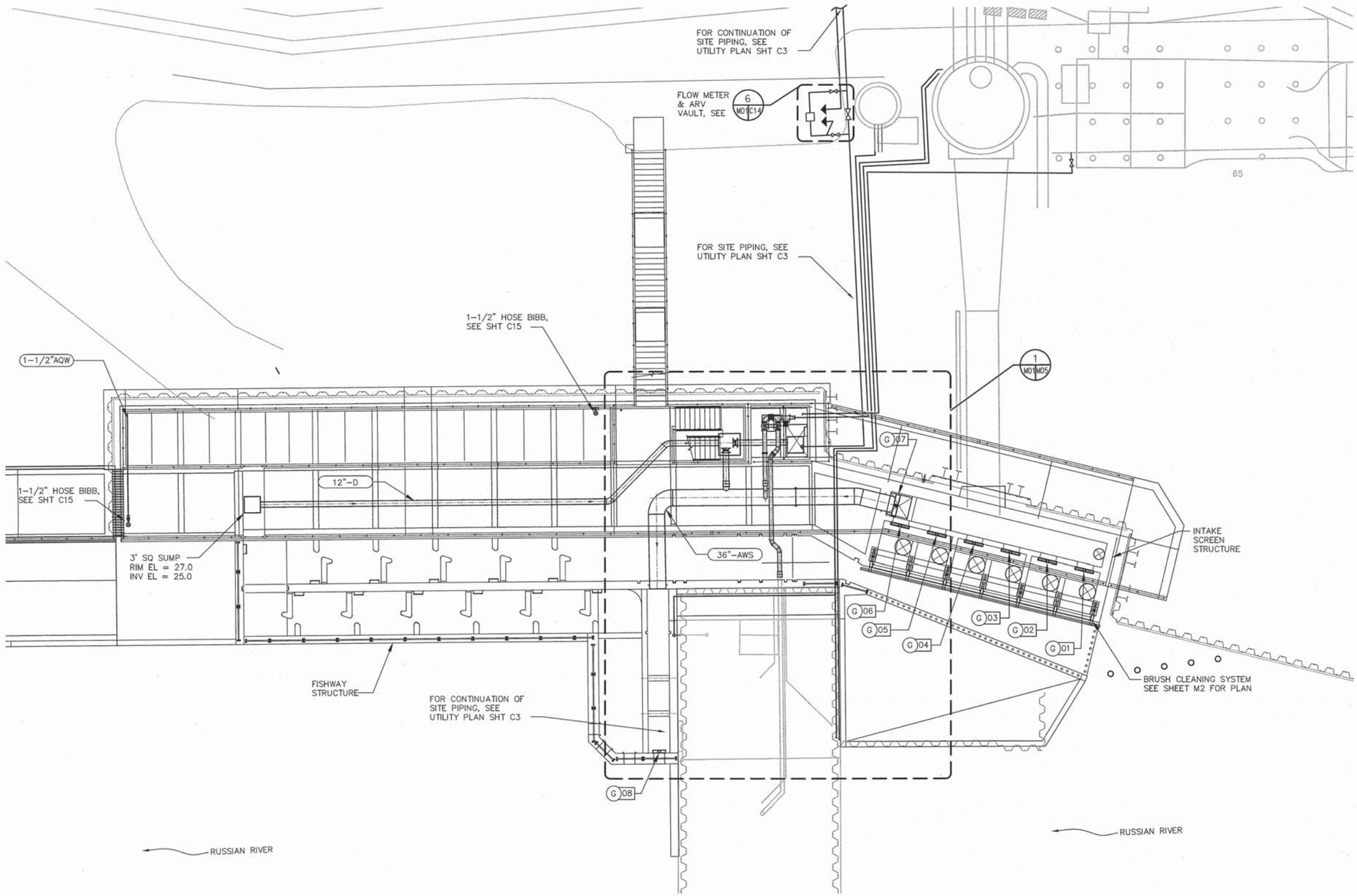

NOTES:

1. SEE CIVIL DRAWINGS FOR ADDITIONAL INFORMATION.
2. SEE SHEET M4 FOR GATE SCHEDULE.

LEGEND:

G 01 GATE

SITE PLAN 1 M1

0 5 10 20 30 FT

SCALE: 1"=10'

N

BAR LENGTH ON ORIGINAL DRAWING EQUALS ONE INCH. ADJUST SCALE ACCORDINGLY

HDR Fisheries DESIGN CENTER

REGISTERED PROFESSIONAL ENGINEER JONATHON A. MANN C63782 Exp. 9/30/14 CIVIL STATE OF CALIFORNIA

3/17/14

NO.	DATE	REVISION	BY
A	3/17/14	ISSUED FOR BIDS	JM

SONOMA COUNTY WATER AGENCY

SCALE: AS NOTED DATE: 3/17/14
DRAWN: ACB
REVIEWED:

Sonoma County Water Agency
Mirabel Fish Screen and Fish Ladder Replacement
MECHANICAL SITE PLAN

FILE NAME: 164479_m01.dwg
CONTRACT NUMBER: ####
DRAWING NUMBER: M1
SHEET 84 OF 99

C:\pwworking\sea\d0645478\164479_M01

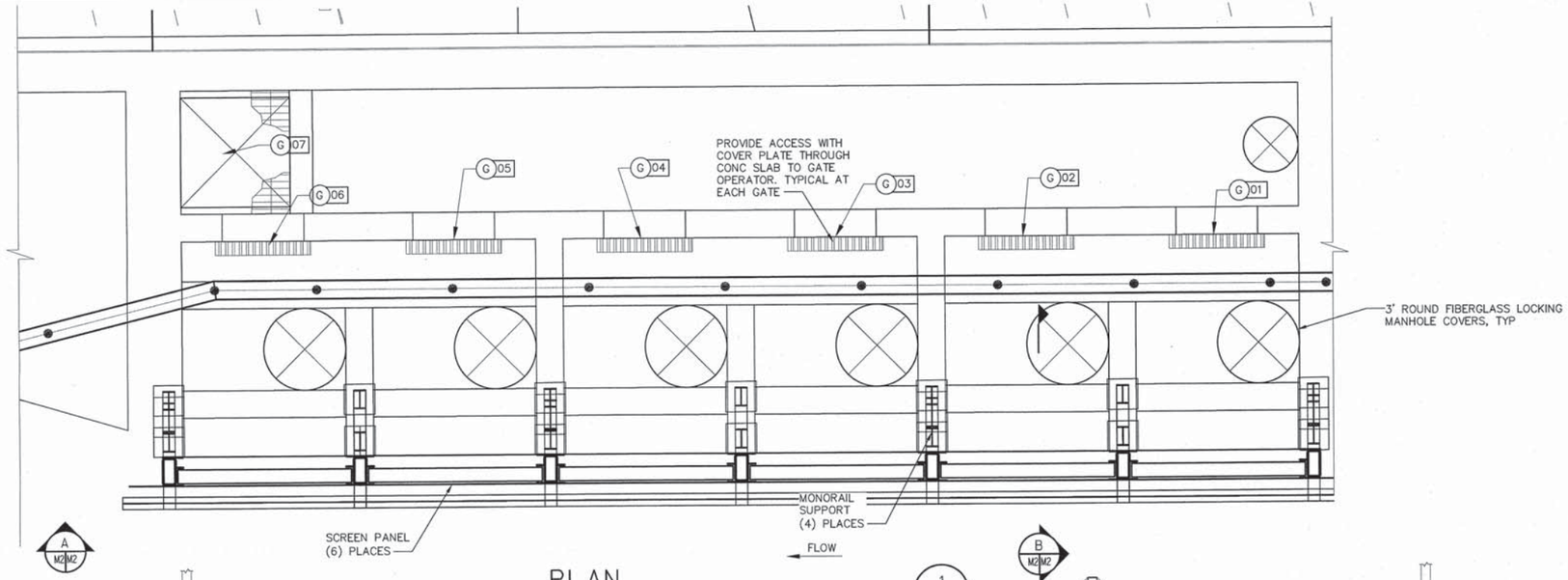

PLAN

1 M1 M2

0 2 4 8 FT

SCALE: 3/8"=1'-0"

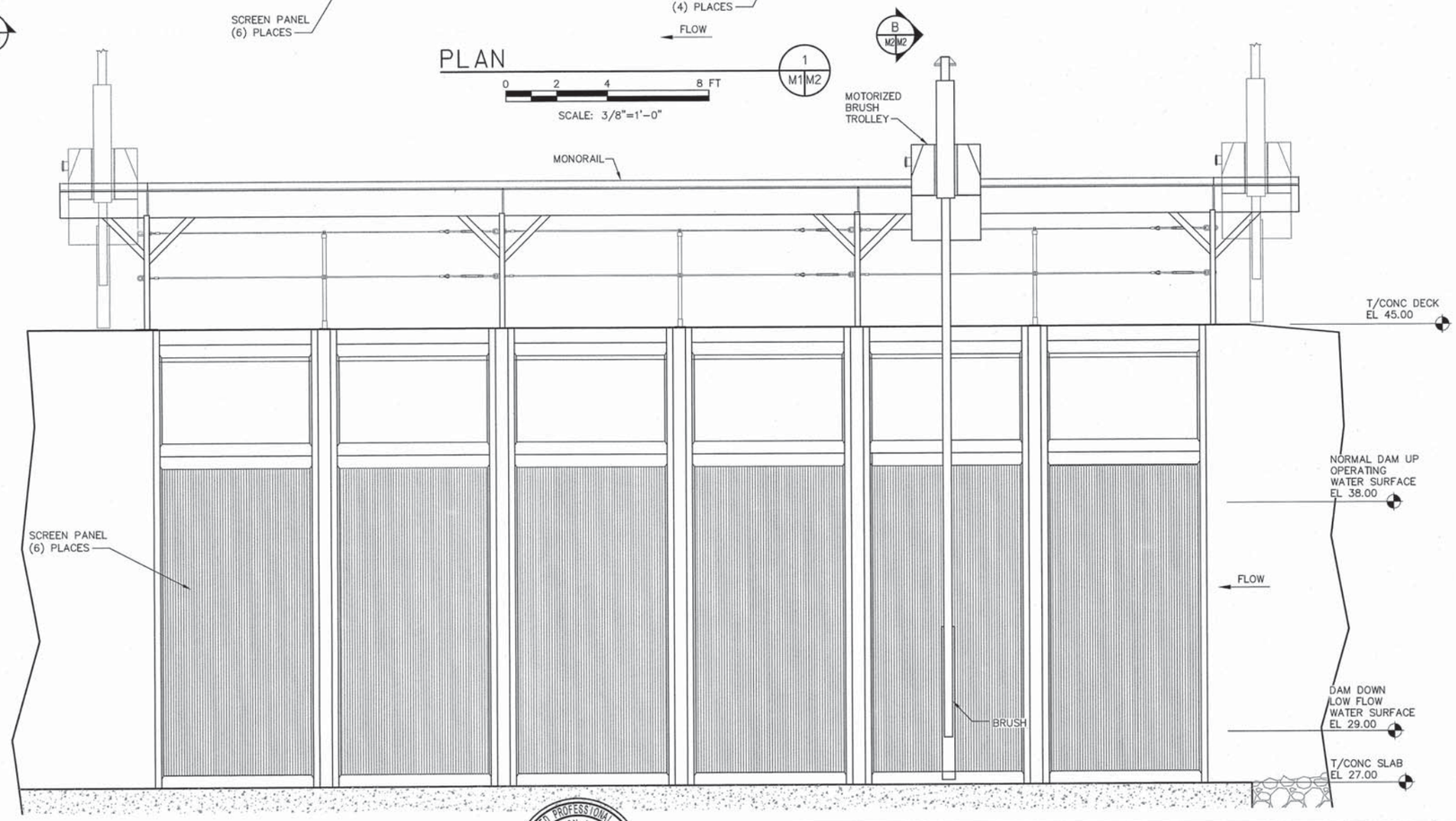

SECTION

0 2 4 8 FT

SCALE: 3/8"=1'-0"

A M2 M2

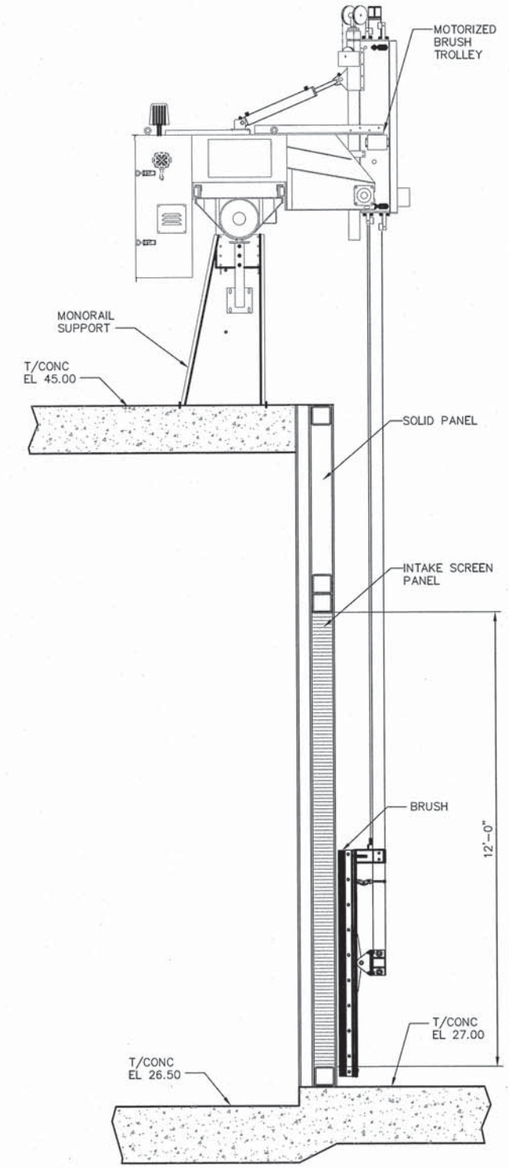

SECTION

0 1 2 4 6 FT

SCALE: 1/2"=1'-0"

B M2 M2

REGISTERED PROFESSIONAL ENGINEER JONATHON A. MANN C63782 Exp. 9/30/14 CIVIL STATE OF CALIFORNIA

3/17/14

NO.	DATE	REVISION	BY
A	3/17/14	ISSUED FOR BIDS	JM

SONOMA COUNTY WATER AGENCY

SCALE: AS NOTED

DATE: 3/17/14

DRAWN: ACB

REVIEWED:

Sonoma County Water Agency

Mirabel Fish Screen and Fish Ladder Replacement

CLEANING SYSTEM PLAN, ELEVATION AND SECTION

FILE NAME: 164479_m02.dwg

CONTRACT NUMBER: ####

DRAWING NUMBER: M2

SHEET 85 OF 99

GATE SCHEDULE

LOCATION	NO.	TYPE OF GATE	GATE MATERIAL	GATE OPENING	MAX HEAD (FT)		TYPE OF FRAME	LIFTING DEVICE		GATE INVERT	TOP OF OPERATOR	TOP SEAL	SIDE SEAL	BOTTOM SEAL	REMARKS
					SEAT	UNSEAT		STEM	TYPE						
DIVERSION 1	G1	SLIDE GATE	ALUM	3 x 6	18.5	0.0	S.C., FL.	N.R.S.	NUT	26.5	44.83	1	2	3	NOTE 1
DIVERSION 2	G2	SLIDE GATE	ALUM	3 x 6	18.5	0.0	S.C., FL	N.R.S.	NUT	26.5	44.83	1	2	3	NOTE 1
DIVERSION 3	G3	SLIDE GATE	ALUM	3 x 6	18.5	0.0	S.C., FL	N.R.S.	NUT	26.5	44.83	1	2	3	NOTE 1
DIVERSION 4	G4	SLIDE GATE	ALUM	3 x 6	18.5	0.0	S.C., FL	N.R.S.	NUT	26.5	44.83	1	2	3	NOTE 1
DIVERSION 5	G5	SLIDE GATE	ALUM	3 x 6	18.5	0.0	S.C., FL	N.R.S.	NUT	26.5	44.83	1	2	3	NOTE 1
DIVERSION 6	G6	SLIDE GATE	ALUM	3 x 6	18.5	0.0	S.C., FL	N.R.S.	NUT	26.5	44.83	1	2	3	NOTE 1
AWS	G7	CANAL GATE	CAST	3'ø	20.0	0.0	S.C., FL	R.S.	ELEC	20.5	44.50	–	–	–	–
AWS CHAMBER	G8	SLIDE GATE	SS304	2 x 4	14.0	14.0	S.C., FL	N.R.S.	NUT	20.5	33.33	1	2	3	NOTE 1

LEGEND:

S.C. – SELF CONTAINED

FL. – FLAT BACK OR FLANGE BACK

N.R.S. – NON-RISING STEM

ELEC. – ELECTRIC OPERATOR

NOTES:

1. PROVIDE (1) TEE HANDLE WRENCH 2'-6" LONG, FOR EACH GATE WITH NON-RISING SYSTEM. ALL TEE HANDLE WRENCHES SHALL BE BUILT TO OPERATE 2" NUTS.
2. CONTRACTOR SHALL PROVIDE ALL ADJUSTMENTS AND TUNING TO ENSURE WATERTIGHT SEAL AND SMOOTH OPERATION.
3. CONTRACTOR SHALL VERIFY GATES AND OPERATORS HAVE SUFFICIENT CLEARANCE FROM WALLS, VAULTS, LIDS AND SURFACES.

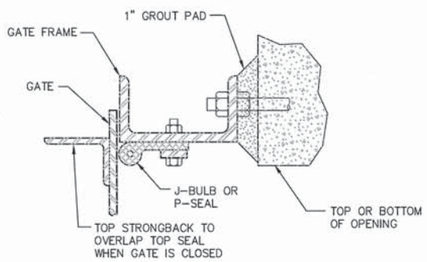

DETAIL 1 M4|M4
NO SCALE

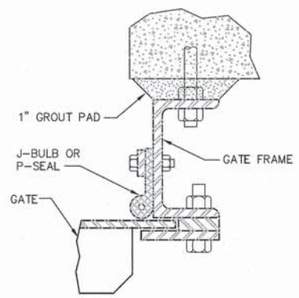

DETAIL 2 M4|M4
NO SCALE

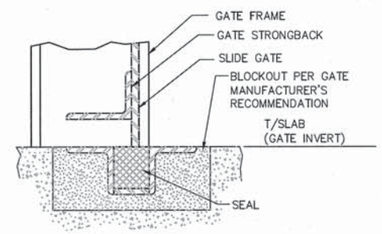

DETAIL 3 M4|M4
NO SCALE

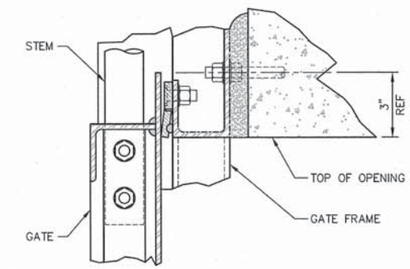

DETAIL 4 M4|M4
NO SCALE

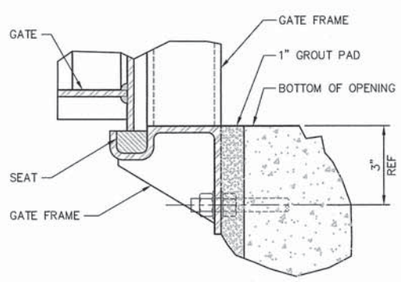

DETAIL 5 M4|M4
NO SCALE

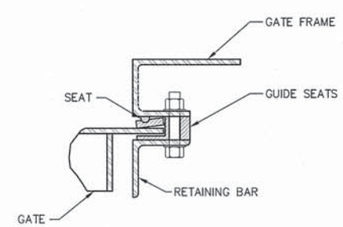

DETAIL 6 M4|M4
NO SCALE

REGISTERED PROFESSIONAL ENGINEER
JONATHON A. MANN
C63782
Exp. 9/30/14
CIVIL
STATE OF CALIFORNIA
3/17/14

NO.	DATE	REVISION	BY
A	3/17/14	ISSUED FOR BIDS	JM

SONOMA COUNTY WATER AGENCY

SCALE: AS NOTED
DATE: 3/17/14
DRAWN: JLC
REVIEWED:

Sonoma County Water Agency
Mirabel Fish Screen and Fish Ladder Replacement
GATE SCHEDULE

FILE NAME: 164479_m04.dwg
CONTRACT NUMBER: ####
DRAWING NUMBER: M4
SHEET 87 OF 99

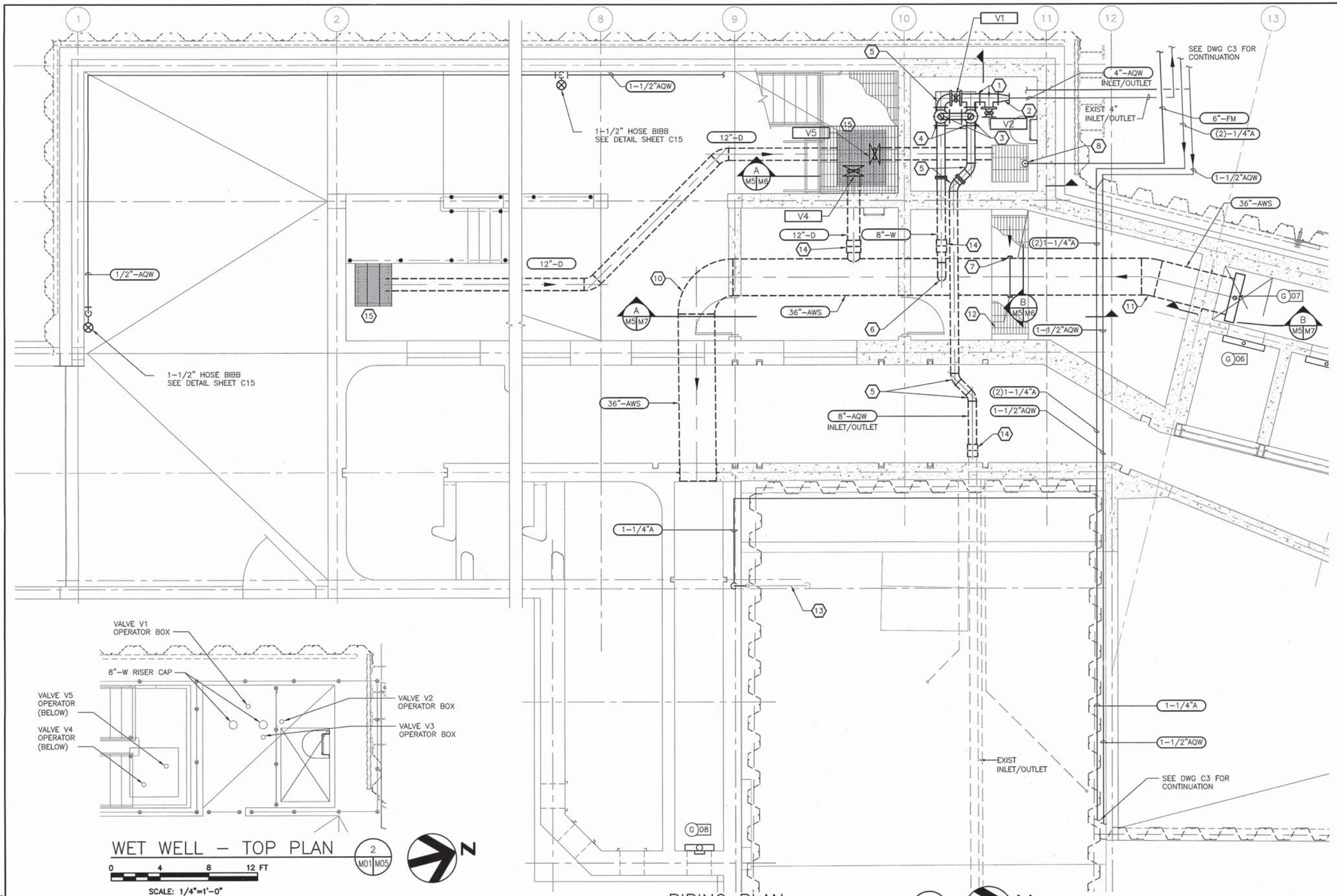

KEYNOTES:

1. 8" TEE
2. 8"X4" REDUCER
3. 6" TEE ABOVE
4. 8" TEE BELOW
5. 8" ELBOW
6. 8" ELBOW – EMERGENCY OVERFLOW
7. FLOW METER
8. 6" DRAIN RISER
9. NOT USED
10. 36" ELBOW
11. 36" FABRICATED ELBOW
12. 12" SQ. SUMP PIT W/ REMOVABLE GRATING ABOVE
13. EXISTING AIR
14. DEPEND-O-LOK COUPLING (OR EQUAL) W/ RESTRAINT RING ON NEW PIPE
15. SAFETY GRATING PLANKS WITH 1/8" PERFORATED HOLES THAT PROVIDE SLIP RESISTANCE. PROVIDE GASKETS AND SHIMS FOR TIGHT SEAL.

LEGEND

V1	KNIFE GATE VALVE – "MAIN RIVER VALVE"
V2	GATE VALVE – "DAM DRAIN VALVE"
V3	KNIFE GATE VALVE
V4	KNIFE GATE VALVE – SUMP
V5	KNIFE GATE VALVE – SUMP

WET WELL – TOP PLAN (2 / M01 M05)

0 4 8 12 FT

SCALE: 1/4"=1'-0"

PIPING PLAN (1 / M1 M5)

0 4 8 12 FT

SCALE: 1/4"=1'-0"

BAR LENGTH ON ORIGINAL DRAWING EQUALS ONE INCH. ADJUST SCALE ACCORDINGLY

HDR Fisheries DESIGN CENTER

REGISTERED PROFESSIONAL ENGINEER JONATHON A. MANN C63782 Exp. 9/30/14 CIVIL STATE OF CALIFORNIA

3/17/14

NO.	DATE	REVISION	BY
A	3/17/14	ISSUED FOR BIDS	JM

SONOMA COUNTY WATER AGENCY

SCALE: AS NOTED | DATE: 3/17/14

DRAWN: LEA

REVIEWED:

Sonoma County Water Agency

Mirabel Fish Screen and Fish Ladder Replacement

PIPING PLAN - "U-TUBE"

FILE NAME: 164479_m05.dwg

CONTRACT NUMBER: ####

DRAWING NUMBER: M5

SHEET 88 OF 99

C:\pwworking\sea\d0645478\164479_M05

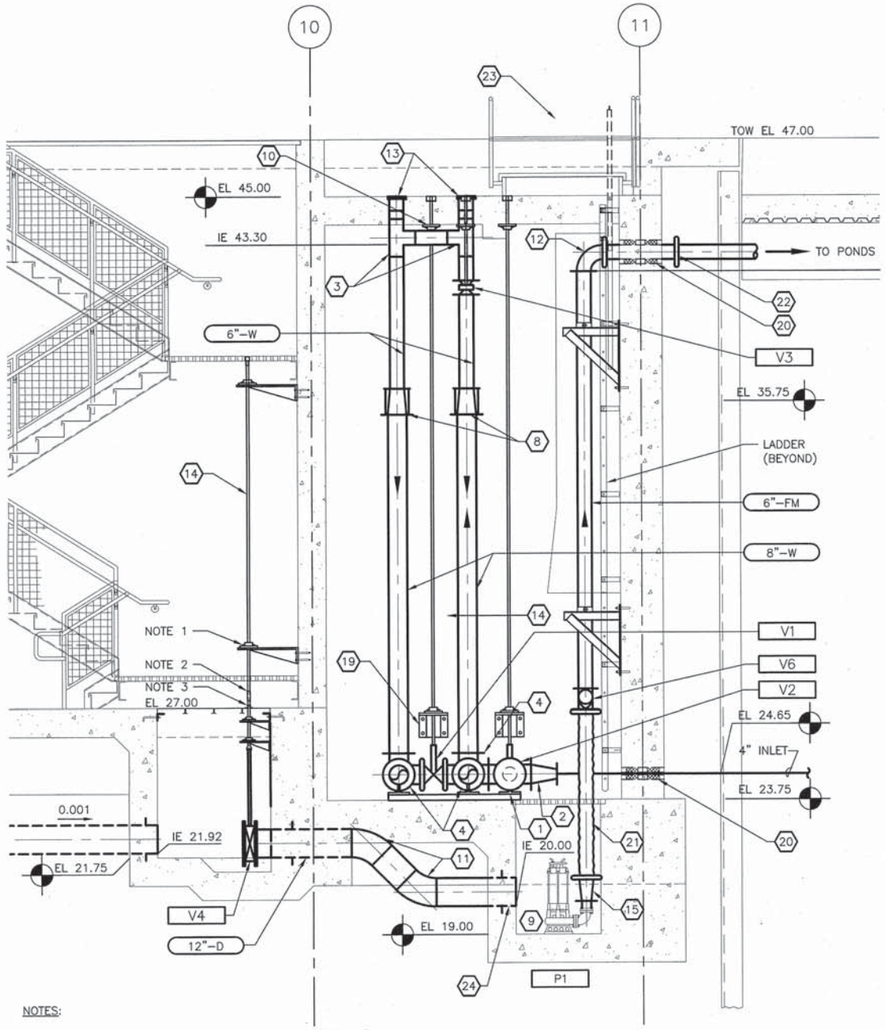

NOTES:

1. STEM SUPPORT ATTACHED WITH REMOVABLE BOLTS AND INSERTS, TYPICAL V4 AND V5.
2. BOLTED STEM COUPLER, TYPICAL V4 AND V5.
3. RUBBER GASKET ATTACHED TO STEM WITH STAINLESS STEEL HOSE CLAMP, TYPICAL V4 AND V5.

SECTION A M5 M6

0 2 4 8 FT

SCALE: 3/8"=1'-0"

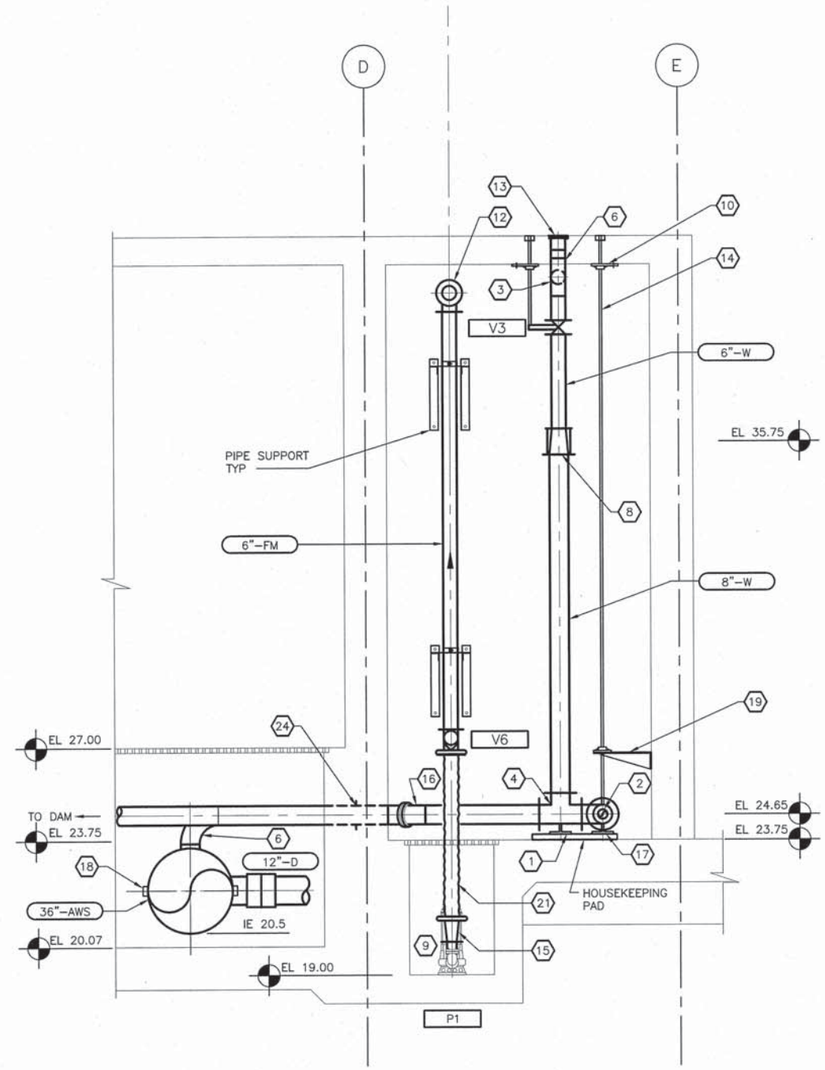

SECTION B M5 M6

0 2 4 8 FT

SCALE: 3/8"=1'-0"

KEYNOTES:

1. TEE SUPPORT
2. 8"X4" REDUCER
3. 6" TEE
4. 8" TEE
5. 8" ELBOW
6. 8" ELBOW – EMERGENCY OVERFLOW
7. NOT USED
8. 8"X6" REDUCERS/COUPLINGS
9. REUSE EXISTING PUMP P1
10. STEM GUIDE
11. 45° 12" ELBOW
12. 6" ELBOW
13. 8" CAP
14. ACTUATOR STEM, 1 1/4" GALVANIZED STEEL, TYP
15. 4"X6" REDUCER
16. 45° 8" ELBOW
17. PIPE SUPPORT AT V1
18. FLOW METER
19. STEM SUPPORT
20. STAINLESS STEEL WALL SLEEVE WITH DOUBLE LINK SEALS (OR EQUAL), TYP
21. 1/4" THICK SUCTION RUBBER HOSE, SUCTION LINE FLEX HOSE
22. FLEX COUPLING
23. ALUMINUM HATCH, H-01
23. INTEGRALLY CAST PIPE, WITH WEEP RING

LEGEND

V1	KNIFE GATE VALVE – MAIN RIVER VALVE
V2	CHECK VALVE – DAM DRAIN VALVE
V3	KNIFE GATE VALVE, GEAR OPERATOR, RIGHT ANGLE DRIVE
V4	KNIFE GATE VALVE – SUMP
V5	KNIFE GATE VALVE – SUMP
V6	6" BALL CHECK VALVE, 3' ABOVE FLOOR
P1	EXISTING/RELOCATED DAM DRAIN PUMP

GENERAL NOTES:

1. ALL FITTINGS STAINLESS STEEL 304 OR 316.

BAR LENGTH ON ORIGINAL DRAWING EQUALS ONE INCH. ADJUST SCALE ACCORDINGLY

HDR Fisheries DESIGN CENTER

REGISTERED PROFESSIONAL ENGINEER JONATHON A. MANN C63782 Exp. 9/30/14 CIVIL STATE OF CALIFORNIA

3/17/14

NO.	DATE	REVISION	BY
A	3/17/14	ISSUED FOR BIDS	JM

SONOMA COUNTY WATER AGENCY

SCALE: AS NOTED DATE: 3/17/14
DRAWN: LEA
REVIEWED:

Sonoma County Water Agency

Mirabel Fish Screen and Fish Ladder Replacement

MECHANICAL SECTIONS 1 - "U-TUBE PIPING"

FILE NAME: 164479_m06.dwg
CONTRACT NUMBER: ####
DRAWING NUMBER: M6
SHEET 89 OF 99

C:\pwworking\sea\d0645478\164479_M06

KEYNOTES:

1. FLOW METER
2. 8" ELBOW
3. 36" ELBOW
4. CANAL GATE COVER
5. CANAL GATE FRAME
6. CANAL GATE GUIDE RAIL
7. ACTUATOR
8. STEM EXTENSION
9. ANCHOR BOLT PER MFR IF REQUIRED
10. FLANGE INSTALLED W/ BOLT HOLES ON PIPE ℄
11. STEM GUIDE
    INTEGRALLY CAST PIPE, W/ WEEP RING

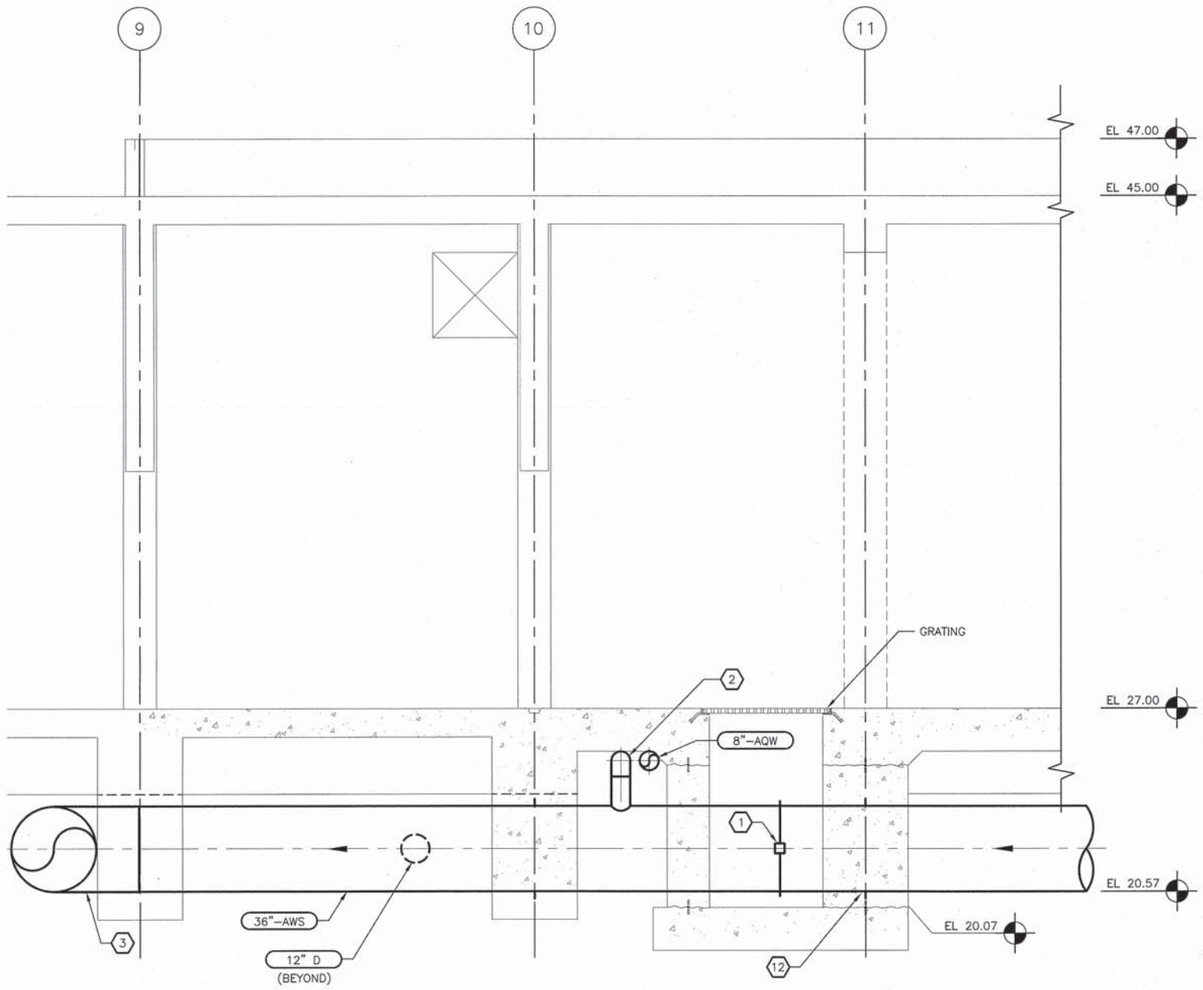

SECTION A M5 M7

0 2 4 8 FT

SCALE: 3/8"=1'-0"

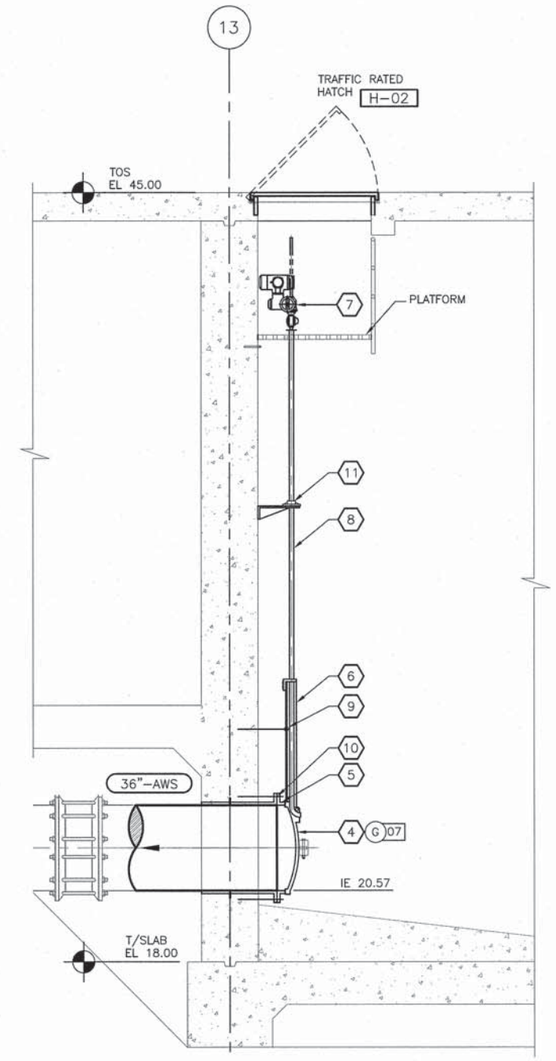

SECTION B M5 M7

0 2 4 8 FT

SCALE: 3/8"=1'-0"

BAR LENGTH ON ORIGINAL DRAWING EQUALS ONE INCH. ADJUST SCALE ACCORDINGLY

HDR Fisheries DESIGN CENTER

REGISTERED PROFESSIONAL ENGINEER
JONATHON A. MANN
C63782
Exp. 9/30/14
CIVIL
STATE OF CALIFORNIA

3/17/14

NO.	DATE	REVISION	BY
A	3/17/14	ISSUED FOR BIDS	JM

SONOMA COUNTY WATER AGENCY

SCALE: AS NOTED
DATE: 3/17/14
DRAWN: LEA
REVIEWED:

Sonoma County Water Agency

Mirabel Fish Screen and Fish Ladder Replacement

MECHANICAL SECTIONS 2

FILE NAME: 164479_m07.dwg
CONTRACT NUMBER: ####
DRAWING NUMBER: M7
SHEET 90 OF 99

C:\pwworking\sea\d0645478\164479_M07.dwg 3/17/2014 9:34:48 PM, pwpmae

X 20A 3P OR X 100AF 80AT 3P — LOW – VOLTAGE CIRCUIT BREAKER (CB). RATINGS AND NO. OF POLES AS SHOWN. WHEN SPECIFIC TYPE IS REQUIRED, X INDICATES TYPE.

TYPES:
MCCB – MOLDED CASE
ICCB – INSULATED CASE
LVP – LOW – VOLTAGE POWER
MCP – MOTOR CIRCUIT PROTECTOR (RATING PER CONNECTED LOAD)

CB — SEPARATELY MOUNTED CIRCUIT BREAKER; SEE ELECTRICAL ONE – LINE DIAGRAM OR SCHEDULE FOR DESCRIPTION

GFP — GROUND FAULT PROTECTION

52 — MEDIUM – VOLTAGE CIRCUIT BREAKER

FUSE, SIZE, AND NUMBER OF FUSES AS NOTED

FUSED CUTOUT, CURRENT RATING, FUSE SIZE, AND NUMBER OF POLES AS NOTED

FUSIBLE SWITCH, CURRENT RATING, FUSE SIZE, AND QUANTITY AS NOTED

NON–FUSED SWITCH, CURRENT RATING, AND NUMBER OF POLES AS NOTED

DISCONNECT OR DRAWOUT CONNECTION

A & B — MAGNETIC MOTOR STARTER AND SEPARATELY MOUNTED COMBINATION MAGNETIC MOTOR STARTER

D & D — MOTOR CONTROLLER AND SEPARATELY MOUNTED MOTOR CONTROLLER WITH SHORT CIRCUIT PROTECTION AND DISCONNECT

MOTOR STARTER AND CONTROLLER SUBSCRIPTS:

A – MAGNETIC STARTER NEMA SIZE

B – STARTER TYPE
NONE – FULL VOLTAGE NON–REVERSING (FVNR)
FVR – FULL VOLTAGE REVERSING
2S – TWO SPEED
RVAT – REDUCED VOLTAGE AUTO TRANSFORMER

C – CONTROL DIAGRAM OR CONTROLS SCHEDULE NUMBER (IF REQUIRED)

D – CONTROLLER TYPE
VFD – VARIABLE FREQUENCY DRIVE
SS – SOLID STATE

SEPARATELY MOUNTED COMBINATION MOTOR STARTER OR CONTROLLER; SEE ELECTRICAL ONE – LINE DIAGRAM OR SCHEDULE FOR DESCRIPTION

THERMAL OVERLOAD ELEMENT

OL — THERMAL OVERLOAD RELAY CONTACT

DISCONNECT OR SAFETY SWITCH, 30A, 3P, NON–FUSED UNLESS OTHERWISE NOTED

7 1/2 OR HP — MOTOR WITH DESIGN HORSEPOWER (WHEN INDICATED)

G — GENERATOR

ATS — TRANSFER SWITCH, CURRENT RATING, AND NUMBER OF POLES AS NOTED

ATS – AUTOMATIC
MTS – MANUAL

TRANSFORMER

Δ 3–PHASE, 3–WIRE DELTA CONNECTION

Y 3–PHASE, 4–WIRE GROUNDED WYE CONNECTION

LP100 208/120V 3ø, 4W — SWITCHBOARD OR PANELBOARD; NAME, VOLTAGE, PHASE, NUMBER OF WIRES WHEN INDICATED

100 KVA — NON–MOTOR LOAD WITH DESIGN KVA, KW, OR AMP

CPT — CONTROL POWER TRANSFORMER (CPT)

VOLTAGE TRANSFORMER (VT OR PT)

CURRENT TRANSFORMER (CT)

WH — UTILITY WATT–HOUR METER PER UTILITY REQUIREMENTS

DMP — DIGITAL METERING PACKAGE

RTM — RUN TIME METER

GROUND

LIGHTNING ARRESTER

SPD — LOW VOLTAGE SURGE PROTECTIVE DEVICE

ELECTRICAL CONNECTION

OR OR — NO ELECTRICAL CONNECTION

SV OR — SOLENOID VALVE

X Y — CONTROL/RELAY COIL; X INDICATES TYPE, Y INDICATES LOOP NO. WHEN USED

TYPES:
CR – CONTROL RELAY
DP – DEFINITE PURPOSE RELAY
LC – LIGHTING CONTACTOR
M – MOTOR STARTER
PC – PHOTO CELL
TC – TIME CLOCK
TR – TIMING RELAY

NORMALLY OPEN CONTACT (N.O.)

NORMALLY CLOSED CONTACT (N.C.)

NORMALLY OPEN TIME DELAY RELAY CONTACT WITH TIME DELAY ON CLOSING AFTER COIL IS ENERGIZED

NORMALLY CLOSED TIME DELAY RELAY CONTACT WITH TIME DELAY ON OPENING AFTER COIL IS ENERGIZED

NORMALLY OPEN TIME DELAY RELAY CONTACT WITH TIME DELAY ON OPENING AFTER COIL IS DE–ENERGIZED

NORMALLY CLOSED TIME DELAY RELAY CONTACT WITH TIME DELAY ON CLOSING AFTER COIL IS DE–ENERGIZED

NORMALLY OPEN TEMPERATURE SWITCH; CLOSE ON RISING TEMPERATURE

NORMALLY CLOSED TEMPERATURE SWITCH; OPEN ON RISING TEMPERATURE

NORMALLY OPEN FLOW SWITCH; CLOSE ON INCREASING FLOW

NORMALLY CLOSED FLOW SWITCH; OPEN ON INCREASING FLOW

NORMALLY OPEN LEVEL SWITCH, CLOSE ON RISING LEVEL

NORMALLY CLOSED LEVEL SWITCH, OPEN ON RISING LEVEL

NORMALLY OPEN PRESSURE SWITCH, CLOSE ON INCREASING PRESSURE

NORMALLY CLOSED PRESSURE SWITCH, OPEN ON INCREASING PRESSURE

NORMALLY OPEN LIMIT SWITCH, CLOSE ON REACHING LIMIT

NORMALLY CLOSED LIMIT SWITCH, OPEN ON REACHING LIMIT

FIELD WIRING EXTERNAL TO CONTROL PANEL

X — INTERLOCK; X INDICATES TYPE

TYPES:
E – ELECTRICAL
M – MECHANICAL
K – KEY

OFF HAND AUTO XOO OOX — 3 POSITION SELECTOR SWITCH, MAINTAINED CONTACTS; UNLESS OTHERWISE NOTED, 2–POSITION SIMILAR

NORMALLY OPEN PUSHBUTTON, MOMENTARY CONTACT UNLESS OTHERWISE NOTED

NORMALLY CLOSED PUSHBUTTON, MOMENTARY CONTACT UNLESS OTHERWISE NOTED

X — INDICATING LIGHT, X INDICATES LENS COLOR

X — PUSH TO TEST INDICATING LIGHT, X INDICATES LENS COLOR

LENS COLORS:
R – RED
G – GREEN
B – BLUE
Y – YELLOW
W – WHITE
A – AMBER

T — TRANSFORMER

CS — CONTROL STATION

SS — SELECTOR SWITCH

PB — PUSHBUTTON

IC — INSTRUMENTATION/CONTROL DEVICE

CONTROL PANEL INTEGRAL OR PROVIDED WITH ASSOCIATED EQUIPMENT

CONTROL PANEL WITH DISCONNECT SWITCH INTEGRAL OR PROVIDED WITH ASSOCIATED EQUIPMENT

J — JUNCTION OR PULL BOX

PANELBOARD (250V TO 600V)

PANELBOARD (LESS THAN 250V)

ELECTRICAL EQUIPMENT ENCLOSURE: SWITCHBOARD, MOTOR CONTROL CENTER, CONTROL PANEL, OR OTHER EQUIPMENT AS INDICATED

PC — PHOTOCELL

X Y — CEILING/PENDANT–MOUNTED LUMINAIRE – HID, COMPACT FLUORESCENT, OR INCANDESCENT

X Y — WALL–MOUNTED LUMINAIRE – HID, COMPACT FLUORESCENT, OR INCANDESCENT

X Y — CEILING/PENDANT–MOUNTED FLUORESCENT FIXTURE

X Y — WALL–MOUNTED FLUORESCENT FIXTURE

X Y — CEILING/PENDANT–MOUNTED FLUORESCENT FIXTURE NORMAL/EMERGENCY

X Y — WALL–MOUNTED FLUORESCENT FIXTURE NORMAL/EMERGENCY

X Y — EMERGENCY LIGHT FIXTURE, 2 ATTACHED HEADS AS SHOWN

X Y — EMERGENCY LIGHT, REMOTE MOUNTED HEAD

X Y — AREA OR ROADWAY LIGHT – POLE–MOUNTED

LIGHTING FIXTURE SUBSCRIPTS:
X – INDICATES FIXTURE TYPE PER LIGHTING FIXTURE SCHEDULE
Y – INDICATES CIRCUIT NUMBER FROM PANELBOARD
z – INDICATES CONTROLLING SWITCH (IF REQUIRED)

$ Y X — TOGGLE SWITCH

SUBSCRIPTS:
X – INDICATES TYPE
NONE – SINGLE POLE
3 – THREE–WAY
4 – FOUR–WAY
HP – TOGGLE SWITCH, HORSEPOWER RATED
K – KEY SWITCH
TE – MANUAL MOTOR STARTER W/ THERMAL ELEMENT
P – PILOT LIGHT
L – LIGHTED HANDLE
Y – INDICATES CONTROLLING SWITCH (IF REQUIRED)

SPECIAL–PURPOSE RECEPTACLE AS DEFINED ON PLANS

PLUG–IN RECEPTACLE STRIP, QUANTITY AND SPACING OF RECEPTACLES AS NOTED OR SPECIFIED

TELECOMMUNICATIONS OUTLET JUNCTION BOX

X Y — QUAD–DUPLEX RECEPTACLE, TWO NEMA 5–20R UNDER COMMON COVER PLATE

X Y — DUPLEX RECEPTACLE, NEMA 5–20R

X Y — SIMPLEX RECEPTACLE, NEMA 5–20R

SUBSCRIPTS:
X – INDICATES TYPE
GFCI – GROUND FAULT CIRCUIT INTERRUPTER
Y – INDICATES CIRCUIT NUMBER FROM PANELBOARD

CONDUIT TURNING UP

CONDUIT TURNING DOWN

HOME RUN TO PANEL, 2 #12, 1 #12G IN 3/4"C UNLESS OTHERWISE NOTED

CIRCUIT RUN BETWEEN DEVICES EXPOSED IN NON–ARCHITECTURALLY FINISHED AREAS; CONCEALED IN ARCHITECTURALLY FINISHED AREAS. CONDUIT AND CONDUCTOR SIZES SHALL BE THE SAME AS THE HOMERUN FOR THE CIRCUIT.

CONDUIT RUN BETWEEN DEVICES CONCEALED IN NON–ARCHITECTURALLY FINISHED AREAS OR UNDER FLOOR SLAB. CONDUIT AND CONDUCTOR SIZES SHALL BE THE SAME AS THE HOMERUN FOR THE CIRCUIT.

EE — EXISTING UNDERGROUND ELECTRICAL DUCTBANK

E — UNDERGROUND ELECTRICAL DUCTBANK

CIRCUIT HASH MARKS (WHEN INDICATED); LONG, SHORT, SINGLE DOT, AND DOUBLE DOT REPRESENT PHASE, NEUTRAL, EQUIPMENT GROUND, AND ISOLATED EQUIPMENT GROUND, RESPECTIVELY. #12 IN 3/4" CONDUIT UNLESS OTHERWISE INDICATED.

CIRCUIT CONTINUATION

CONDUIT STUBBED OUT AND CAPPED

XXX — CONDUIT TAG OR CIRCUIT NUMBER – WIRE AND CONDUIT SIZE AS SPECIFIED IN CIRCUIT SCHEDULE ON THE SHEETS

GROUND CABLE

GROUND ROD

FAA — FIRE ALARM ANNUNCIATOR

FACP — FIRE ALARM CONTROL PANEL

F — FIRE ALARM MANUAL PULL STATION

CR — FIRE ALARM CONTROL RELAY

FS — FIRE ALARM CONTACT, FLOW SWITCH

TS — FIRE ALARM CONTACT, TAMPER SWITCH

PS — FIRE ALARM CONTACT, PRESSURE SWITCH

X AND X — SMOKE AND DUCT DETECTOR

SUBSCRIPT:
I – IONIZATION TYPE
P – PHOTOELECTRIC TYPE

X — HEAT DETECTOR

SUBSCRIPT:
R/C – RATE COMPENSATION
R/F – COMBINATION RATE OF RISE AND FIXED TEMP
R – RATE OF RISE
F – FIXED

X — ALARM BELL

X — ALARM HORN

X — ALARM FLASHING LIGHT

X — ALARM BELL AND FLASHING LIGHT COMBINATION UNIT

X — ALARM HORN AND FLASHING LIGHT COMBINATION UNIT

SUBSCRIPT:
NONE – GENERAL ALARM DEVICE
F – FIRE ALARM DEVICE

WALL END MOUNTED EXIT SIGN – READABLE FROM ONE OR TWO SIDES AS SHOWN BY ARROWS

WALL MOUNTED EXIT SIGN – READABLE FROM FRONT AS SHOWN BY ARROW WITH ARROW ON SIGN SHOWING EXIT DIRECTION

WALL MOUNTED EXIT SIGN – READABLE FROM FRONT AS SHOWN BY ARROW

NOTE: ALL EXIT SIGNS TO BE EASILY REMOVABLE FOR SEASONAL OFF–SITE STORAGE.

GENERAL NOTES:

1. THIS IS A STANDARD ELECTRICAL SYMBOLOGY SHEET. NOT ALL SYMBOLS MAY BE USED ON THIS PROJECT.
2. SCREENING OR SHADING OF WORK IS USED TO INDICATE EXISTING COMPONENTS OR TO DE–EMPHASIZE PROPOSED IMPROVEMENT TO HIGHLIGHT SELECTED TRADE WORK. REFER TO CONTEXT OF EACH SHEET FOR USAGE.
3. SEE P&ID LEGEND SHEET FOR PROJECT–SPECIFIC EQUIPMENT SYMBOLS, EQUIPMENT ABBREVIATIONS, AND PIPING SYSTEM ABBREVIATIONS.

BAR LENGTH ON ORIGINAL DRAWING EQUALS ONE INCH. ADJUST SCALE ACCORDINGLY

HDR Fisheries DESIGN CENTER

REGISTERED PROFESSIONAL ENGINEER WILLIAM F. ETTLICH NO. 7625 EXP. 09/30/14 STATE OF CALIFORNIA
3/17/14

NO.	DATE	REVISION	BY
A	3/17/14	ISSUED FOR BIDS	WFE

SONOMA COUNTY WATER AGENCY

SCALE: AS NOTED
DATE: 3.17.2014
DRAWN: RJG
REVIEWED:

Sonoma County Water Agency
Mirabel Fish Screen and Fish Ladder Replacement
ELECTRICAL LEGENDS AND SYMBOLS

FILE NAME: 164479_e01.dwg
CONTRACT NUMBER: ####
DRAWING NUMBER: E1
SHEET 91 OF 99

C:\pwworking\sea\d0845476\164479_E01

PANEL: D	FEEDER ENTRANCE: TOP	MOUNTING: SURFACE
SERVICE: 120/208 VOLTS, 3 PHASE, 4W, 100A		SERVICE ENTRANCE LABEL: NO
MAIN DEVICE: 50A CIRCUIT BREAKER		

CKT NO.	CIRCUIT IDENTIFICATION	CB AMPS	VA PER PHASE A	VA PER PHASE B	VA PER PHASE C	CB AMPS	CIRCUIT IDENTIFICATION	CKT NO.
1	LIGHTS	20/1	600 / 500			20/1	EXIT SIGNS	2
3	FLOW TRANSMITTER	20/1		· / ·		20/1	OUTLETS	4
5	SPARE	20/1			· / 500	20/1	SWITCHED LIGHTS	6
7	GATE ACTUATOR AND CONTROL PANEL	15/3	100 / 100			20/1	GATE CONTROL PANEL	8
9				100 / 1000		15/3	FISH SCREEN CP	10
11					100 / 1000			12
13	SUMP PUMP	20/1	300 / 1000					14
15	SPARE	20/1		· / ·		20/1	SPARE	16
17	SPARE	20/1			· / ·	20/1	SPARE	18
19	SPARE	20/1	· / ·			20/1	SPARE	20
21	SPARE	20/1		· / ·		20/1	SPARE	22
23	SPARE	20/1			· / ·	20/1	SPARE	24
25	SPARE	20/1	· / ·			20/1	SPARE	26
27	SPARE	20/1		· / ·		20/1	SPARE	28
29	SPARE	20/1			· / ·	20/1	SPARE	30
	EST TOTAL VA PER PHASE		2600	1100	1600			
	EST TOTAL PANELBOARD VA				5300			

PANEL D (1 / E2 E5)

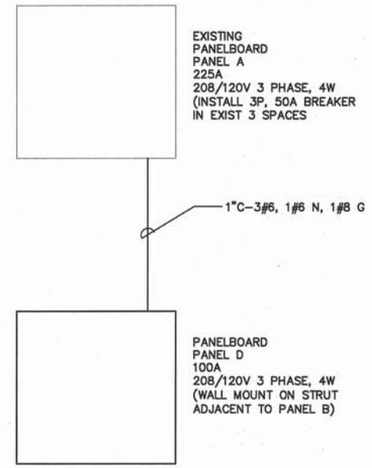

SINGLE LINE DIAGRAM (2 / E2 E5)

SEE DWG E5

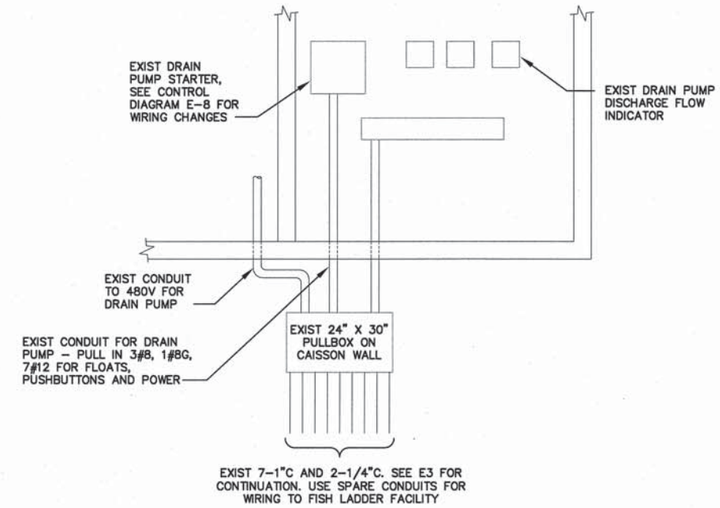

CONTROL ROOM SOUTH WALL ELEVATION (3 / E2 E5)

SEE DWG E5

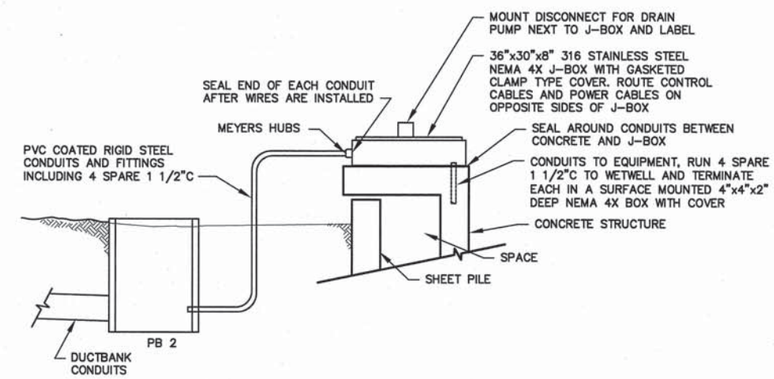

DUCT CONNECTION FROM PB2 TO STRUCTURE (4 / E2 E6)

SCALE: 1/2"=1'-0"

BAR LENGTH ON ORIGINAL DRAWING EQUALS ONE INCH. ADJUST SCALE ACCORDINGLY

HDR Fisheries DESIGN CENTER

REGISTERED PROFESSIONAL ENGINEER WILLIAM F. ETTLICH NO. 7625 EXP. 09/30/14 STATE OF CALIFORNIA

3/17/14

NO.	DATE	REVISION	BY
A	3/17/14	ISSUED FOR BIDS	WFE

SONOMA COUNTY WATER AGENCY

SCALE: NONE | DATE: 3.17.2014 | DRAWN: RAA | REVIEWED:

Sonoma County Water Agency

Mirabel Fish Screen and Fish Ladder Replacement

SINGLE LINE DIAGRAM AND PANEL BOARD SCHEDULE

FILE NAME: 164479_e02.dwg | CONTRACT NUMBER: #### | DRAWING NUMBER: E2 | SHEET 92 OF 99

C:\pwworking\sea\d0645476\164479_E02.dwg, 3/17/2014 10:17:21 AM, mmoore

C:\pwworking\sea\d0645476\164479_E02

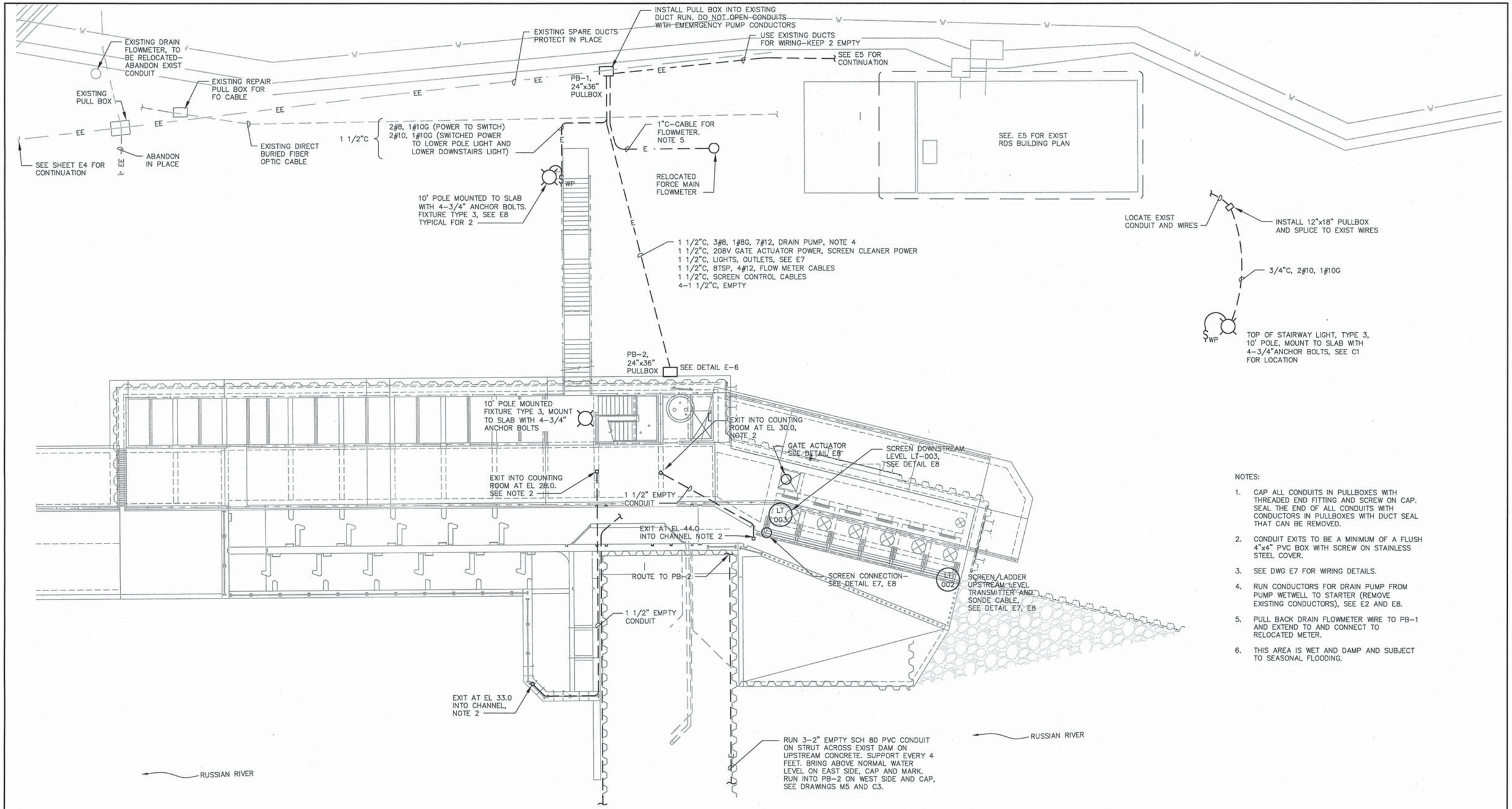

NOTES:

1. CAP ALL CONDUITS IN PULLBOXES WITH THREADED END FITTING AND SCREW ON CAP. SEAL THE END OF ALL CONDUITS WITH CONDUCTORS IN PULLBOXES WITH DUCT SEAL THAT CAN BE REMOVED.
2. CONDUIT EXITS TO BE A MINIMUM OF A FLUSH 4"x4" PVC BOX WITH SCREW ON STAINLESS STEEL COVER.
3. SEE DWG E7 FOR WIRING DETAILS.
4. RUN CONDUCTORS FOR DRAIN PUMP FROM PUMP WETWELL TO STARTER (REMOVE EXISTING CONDUCTORS), SEE E2 AND E8.
5. PULL BACK DRAIN FLOWMETER WIRE TO PB-1 AND EXTEND TO AND CONNECT TO RELOCATED METER.
6. THIS AREA IS WET AND DAMP AND SUBJECT TO SEASONAL FLOODING.

SITE PLAN

1 / E2

0 5 10 20 30 FT

SCALE: 1"=10'

N

BAR LENGTH ON ORIGINAL DRAWING EQUALS ONE INCH. ADJUST SCALE ACCORDINGLY

HDR Fisheries DESIGN CENTER

REGISTERED PROFESSIONAL ENGINEER WILLIAM F. ETLICH NO. 7625 EXP. 09/30/14 STATE OF CALIFORNIA

3/17/14

NO.	DATE	REVISION	BY
A	3/17/14	ISSUED FOR BIDS	WRE

SONOMA COUNTY WATER AGENCY

SCALE: AS NOTED | DATE: 3.17.2014

DRAWN: EGS

REVIEWED:

Sonoma County Water Agency

Mirabel Fish Screen and Fish Ladder Replacement

ELECTRICAL SITE PLAN

FILE NAME: 164479_e03.dwg

CONTRACT NUMBER: ####

DRAWING NUMBER: E3

SHEET 93 OF 99

C:\pwworking\sea\d0645478\164479_E03

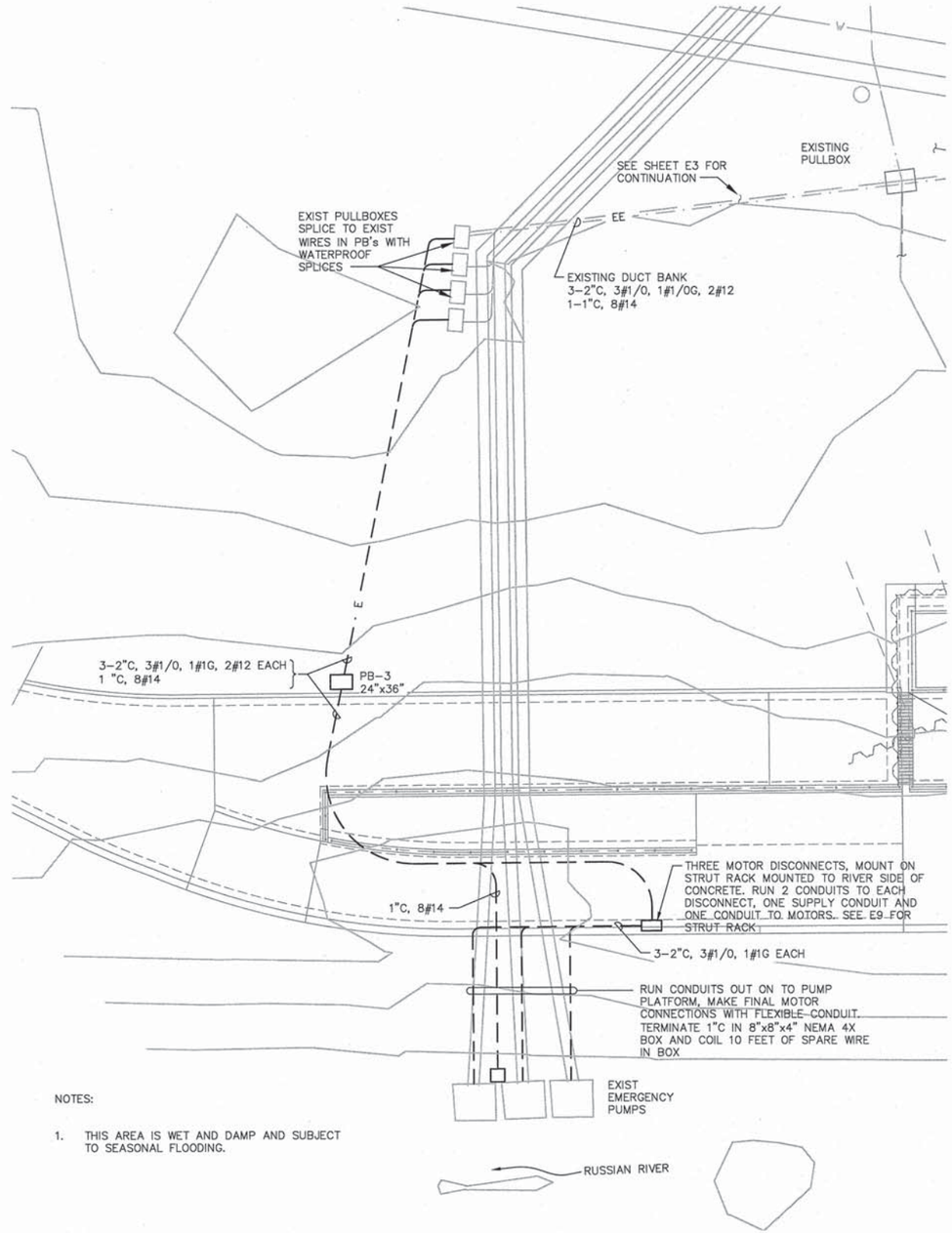

NOTES:

1. THIS AREA IS WET AND DAMP AND SUBJECT TO SEASONAL FLOODING.

EMERGENCY PUMP SITE PLAN

1 -- E4

N

0 5 10 20 30 FT

SCALE: 1"=10'

BAR LENGTH ON ORIGINAL DRAWING EQUALS ONE INCH. ADJUST SCALE ACCORDINGLY

HDR Fisheries DESIGN CENTER

REGISTERED PROFESSIONAL ENGINEER WILLIAM F. ETTLICH NO. 7625 EXP. 09/30/14 STATE OF CALIFORNIA

3/17/14

NO.	DATE	REVISION	BY
A	3/17/14	ISSUED FOR BIDS	WFE

SONOMA COUNTY WATER AGENCY

SCALE: AS NOTED
DATE: 3.17.2014
DRAWN: EGS
REVIEWED:

Sonoma County Water Agency

Mirabel Fish Screen and Fish Ladder Replacement

EMERGENCY PUMP SITE PLAN

FILE NAME: 164479_e04.dwg
CONTRACT NUMBER: ####
DRAWING NUMBER: E4
SHEET 94 OF 99

C:\pwworking\sea\d0845476\164479_E04

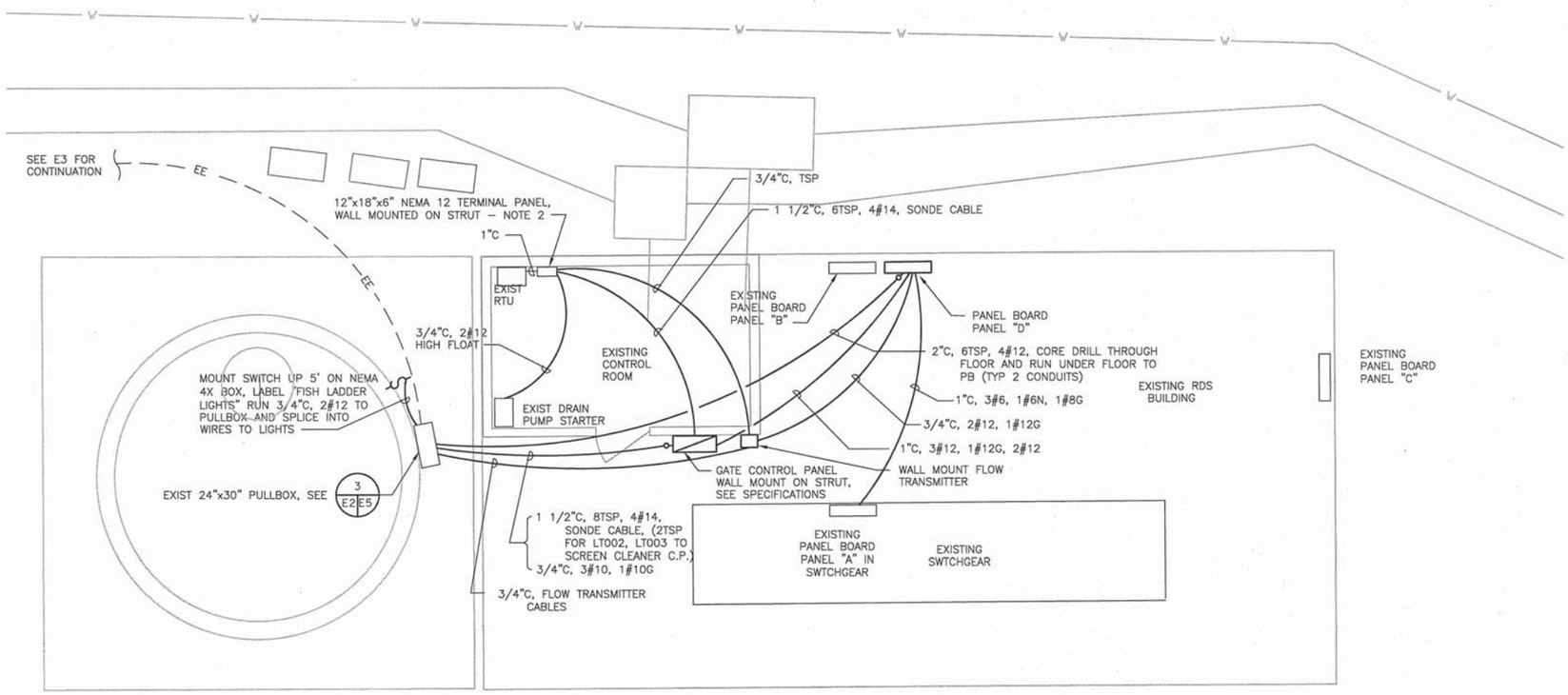

NOTES:

1. INSIDE OF RDS BUILDING IS DRY.
2. INSTALL TERMINAL STRIPS IN PANEL AND TERMINATE ALL WIRES ON THE STRIP. MARK EACH WIRE AND TERMINAL AND PROVIDE CONNECTION DIAGRAM IN PANEL. PROVIDE 20 SPARE TERMINALS.

EXISTING RDS BUILDING PLAN

N

0 2 4 8 12 FT

SCALE: 1/4"=1'-0"

BAR LENGTH ON ORIGINAL DRAWING EQUALS ONE INCH. ADJUST SCALE ACCORDINGLY

HDR Fisheries DESIGN CENTER

REGISTERED PROFESSIONAL ENGINEER WILLIAM F. ETTLICH NO. 7625 EXP. 09/30/14 STATE OF CALIFORNIA

3/17/14

NO.	DATE	REVISION	BY
A	3/17/14	ISSUED FOR BIDS	WFE

SONOMA COUNTY WATER AGENCY

SCALE: AS NOTED
DATE: 3.17.2014
DRAWN: EGS
REVIEWED:

Sonoma County Water Agency
Mirabel Fish Screen and Fish Ladder Replacement
RDS ELECTRICAL PLAN

FILE NAME: 164479_e05.dwg
CONTRACT NUMBER: ####
DRAWING NUMBER: E5
SHEET 95 OF 99

C:\pwworking\sea\d0645478\164479_E05

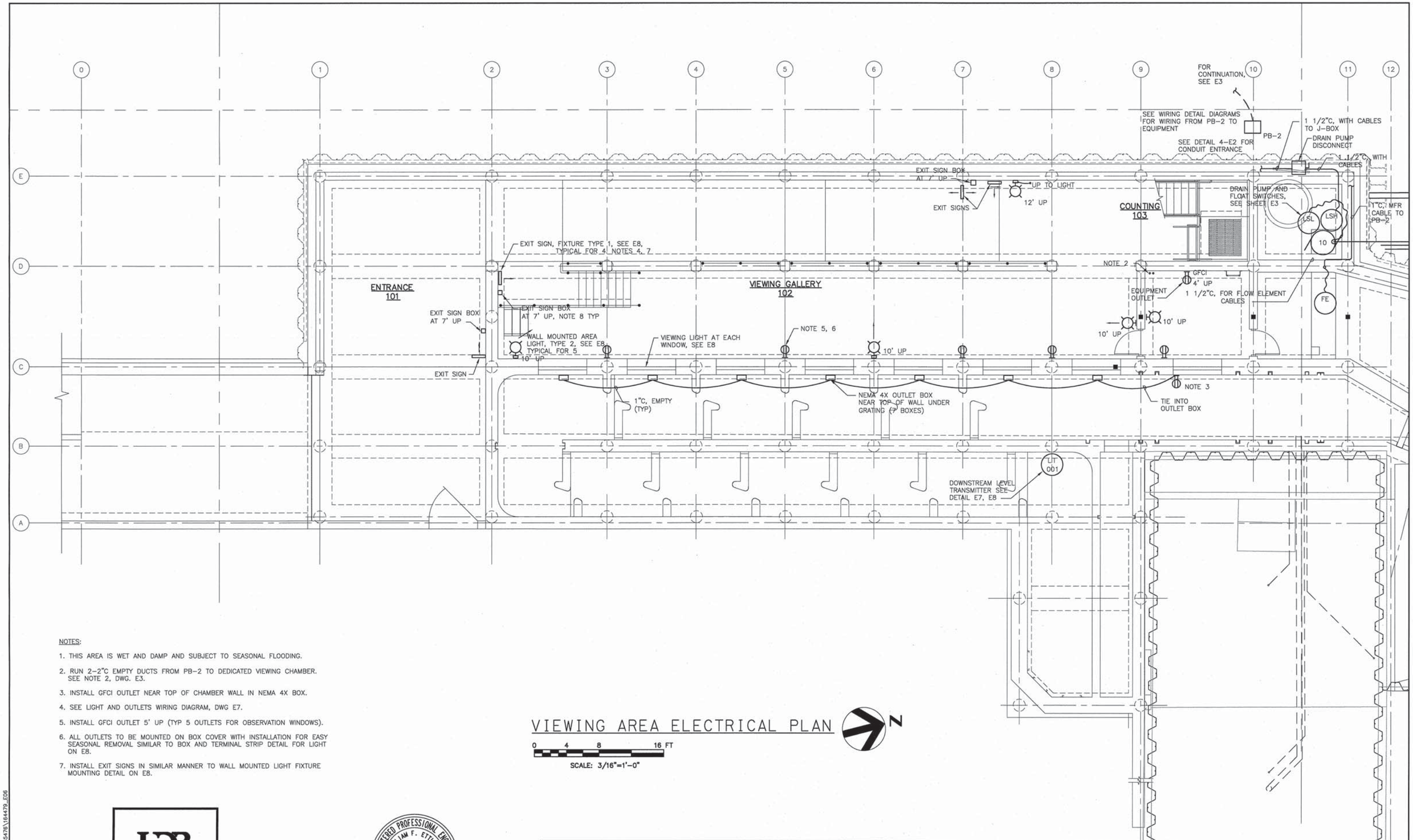

NOTES:

1. THIS AREA IS WET AND DAMP AND SUBJECT TO SEASONAL FLOODING.
2. RUN 2-2"C EMPTY DUCTS FROM PB-2 TO DEDICATED VIEWING CHAMBER. SEE NOTE 2, DWG. E3.
3. INSTALL GFCI OUTLET NEAR TOP OF CHAMBER WALL IN NEMA 4X BOX.
4. SEE LIGHT AND OUTLETS WIRING DIAGRAM, DWG E7.
5. INSTALL GFCI OUTLET 5' UP (TYP 5 OUTLETS FOR OBSERVATION WINDOWS).
6. ALL OUTLETS TO BE MOUNTED ON BOX COVER WITH INSTALLATION FOR EASY SEASONAL REMOVAL SIMILAR TO BOX AND TERMINAL STRIP DETAIL FOR LIGHT ON E8.
7. INSTALL EXIT SIGNS IN SIMILAR MANNER TO WALL MOUNTED LIGHT FIXTURE MOUNTING DETAIL ON E8.

VIEWING AREA ELECTRICAL PLAN

0 4 8 16 FT

SCALE: 3/16"=1'-0"

N

BAR LENGTH ON ORIGINAL DRAWING EQUALS ONE INCH. ADJUST SCALE ACCORDINGLY

HDR Fisheries DESIGN CENTER

REGISTERED PROFESSIONAL ENGINEER WILLIAM F. ETTLICH NO. 7625 EXP. 09/30/14 STATE OF CALIFORNIA

3/17/14

NO.	DATE	REVISION	BY
A	3/17/14	ISSUED FOR BIDS	WFE

SONOMA COUNTY WATER AGENCY

SCALE: AS NOTED
DATE: 3.17.2014
DRAWN: EGS
REVIEWED:

Sonoma County Water Agency

Mirabel Fish Screen and Fish Ladder Replacement

VIEWING AREA ELECTRICAL PLAN

FILE NAME: 164479_e06.dwg
CONTRACT NUMBER: ####
DRAWING NUMBER: E6
SHEET 96 OF 99

C:\pwworking\sac\d0645476\164479_E06

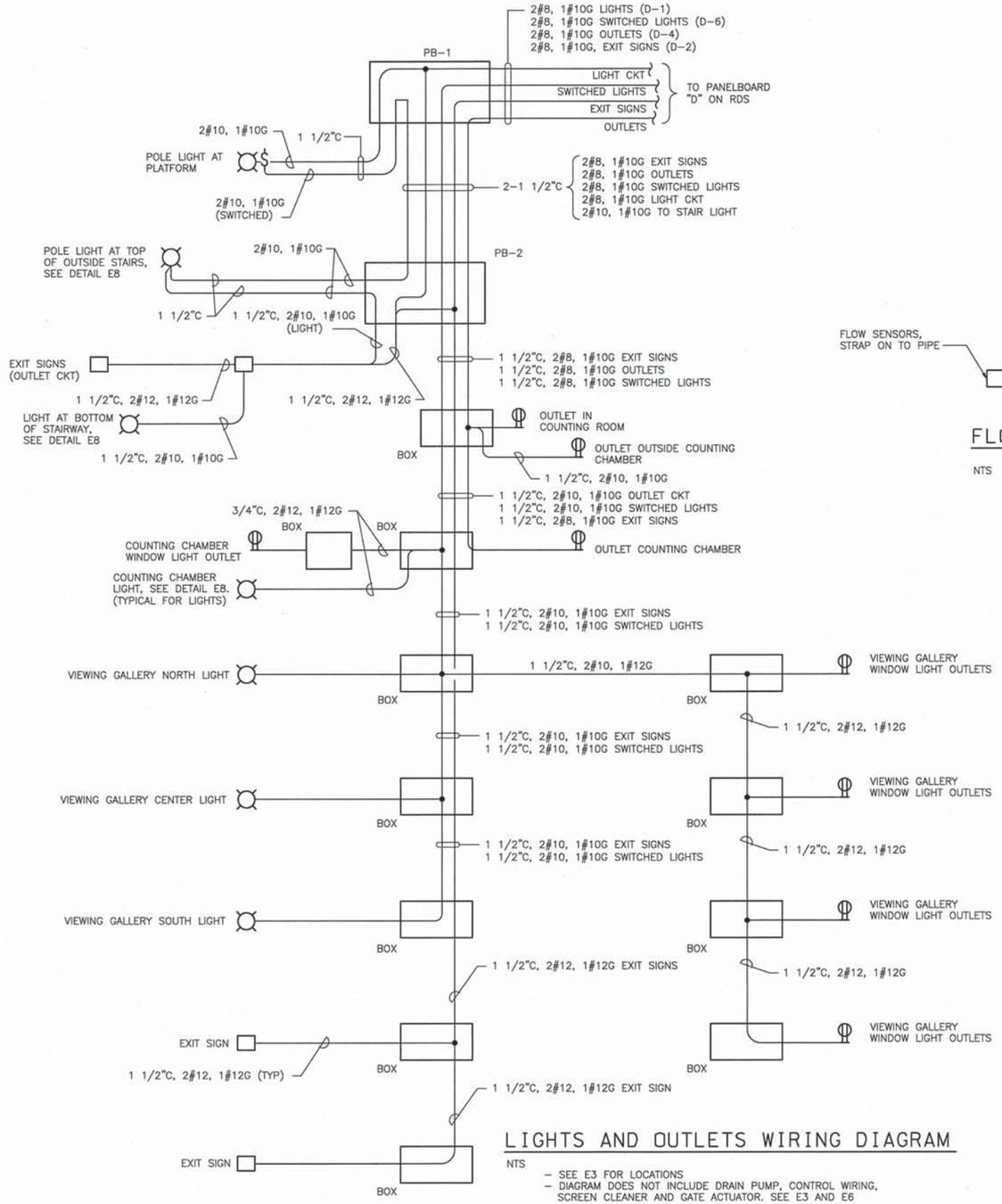

LIGHTS AND OUTLETS WIRING DIAGRAM

NTS

- SEE E3 FOR LOCATIONS
- DIAGRAM DOES NOT INCLUDE DRAIN PUMP, CONTROL WIRING, SCREEN CLEANER AND GATE ACTUATOR. SEE E3 AND E6

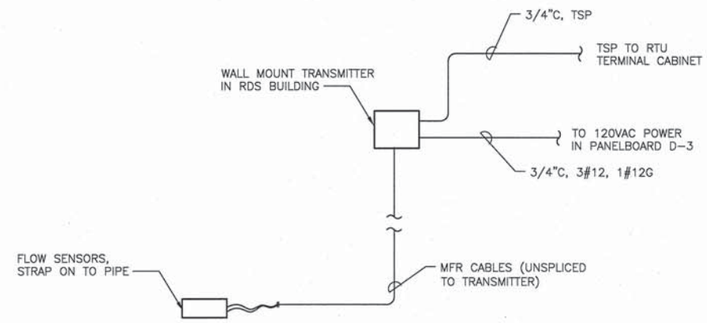

FLOW METER WIRING DIAGRAM

NTS

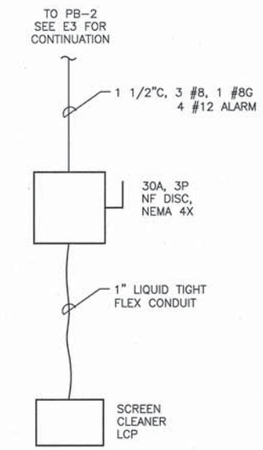

MOUNT DISCONNECT ON SOUTH SCREEN SUPPORT OR PEDESTAL

SCREEN CLEANING CONNECTION DETAIL

NTS

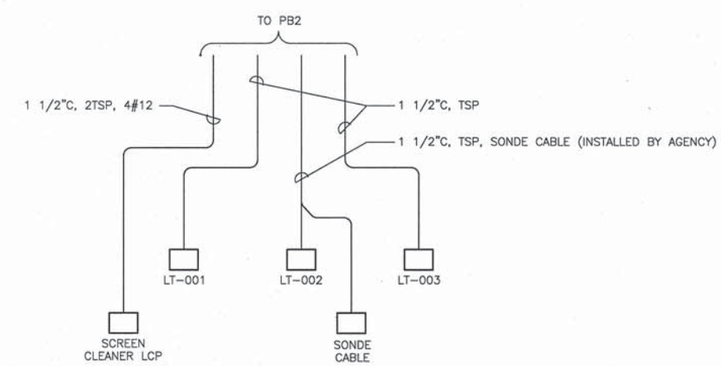

LEVEL TRANSMITTER WIRING DETAIL

NTS

BAR LENGTH ON ORIGINAL DRAWING EQUALS ONE INCH. ADJUST SCALE ACCORDINGLY

HDR Fisheries DESIGN CENTER

REGISTERED PROFESSIONAL ENGINEER WILLIAM F. ETTLICH NO. 7625 EXP. 09/30/14 STATE OF CALIFORNIA

3/17/14

NO.	DATE	REVISION	BY
A	3/17/14	ISSUED FOR BIDS	WFE

SONOMA COUNTY WATER AGENCY

SCALE: NONE | DATE: 3.17.2014
DRAWN: EGS
REVIEWED:

Sonoma County Water Agency
Mirabel Fish Screen and Fish Ladder Replacement
ELECTRICAL WIRING DIAGRAMS

FILE NAME: 164479_e07.dwg
CONTRACT NUMBER: ####
DRAWING NUMBER: E7
SHEET 97 OF 99

C:\pwworking\sac\d0845478\164479_E07

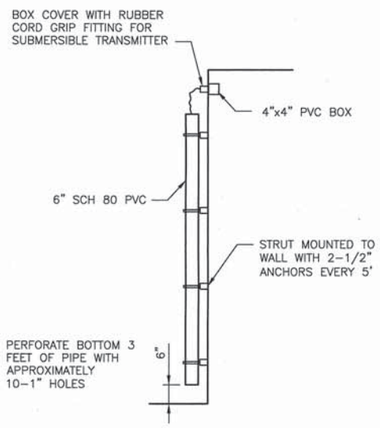

LEVEL MEASUREMENT

NTS

(TYPICAL FOR 3; FISHLADDER UPSTREAM AND DOWNSTREAM, LT-001 AND LT-002 AND SCREEN DOWNSTREAM LT-002)

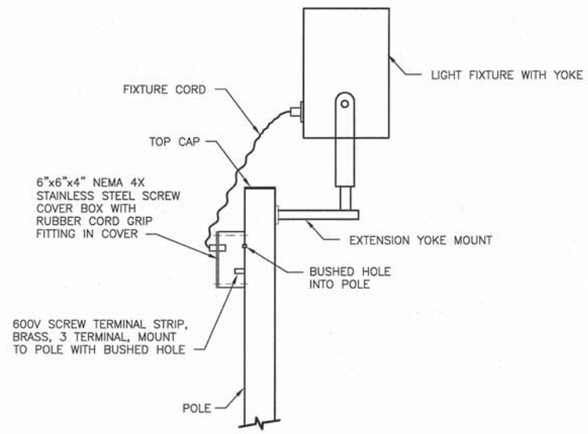

POLE MOUNTED LIGHT FIXTURE MOUNTING

NTS

(TYPICAL FOR 2)
SEE SPECIFICATION SECTION 16493

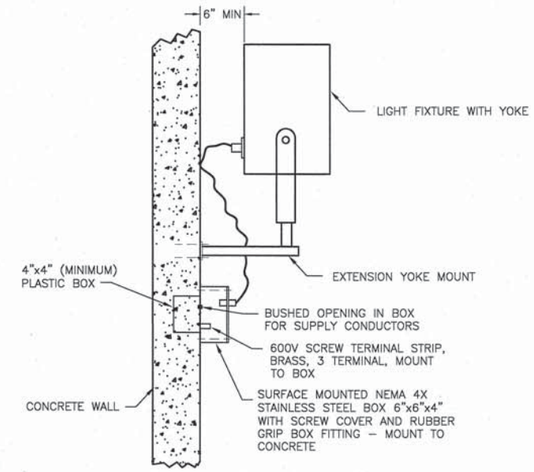

WALL MOUNTED LIGHT FIXTURE MOUNTING

NTS

(TYPICAL FOR EXIT LIGHTS AND WALL LIGHTS - 9 TOTAL)
SEE SPECIFICATION SECTION 16493

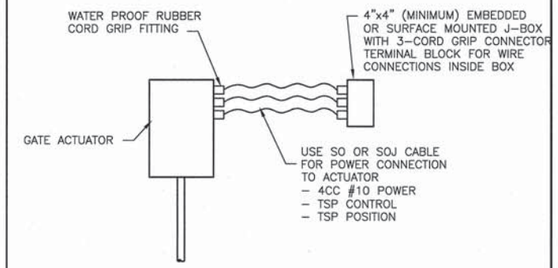

GATE ACTUATOR CONNECTION

NTS

SEE SPECIFICATION SECTION 16493

LIGHT FIXTURE SCHEDULE

TYPE	DESCRIPTION	MOUNTING
1	EXIT SIGN LITHONIA QUANTUM LQM-LED-SW-SINGLE OR DOUBLEFACE AS SHOWN - R120ELN WITH CORD AND PLUG, NICAD BATTERY AND CHARGER. PROVIDE WITH BACK OR END MOUNTING PLATES AS SHOWN FOR EASY SEASONAL INSTALLATION/REMOVAL WITH SCREW ANCHORS TO WALL	MOUNT 7' UP EITHER WALL OR END MOUNT AS SHOWN ON DRAWING
2	WALL MOUNT LIGHT, HYDREL SERIES 8100, DIE-CAST A369 ALUMINUM HOUSING, STAINLESS STEEL FASTENER, YOKE MOUNTING WITH WALL MOUNT HORIZONTAL YOKE ARM, 3 WIRE TYPE SO OR SOJ CORD MOUNTED AND SEALED TO FIXTURE, IP66 OR IP68 LISTING, 36 LED, 87W, NEMA FLOOD, STANDARD LED's TESTED TO LM-80-08 (REBEL 100), 70% LUMEN MAINTENANCE TO 50,000 HOURS AND DARK BRONZE COLOR.	MOUNT 8' UP ON WALL
3	POLE MOUNT LIGHT, FIXTURE SAME AS TYPE 2 WITH POLE MOUNT HORIZONTAL YOKE ARM. POLE TO BE 4" SQUARE STRAIGHT ALUMINUM, HEIGHT AS SHOWN, DARK BRONZE POWDER COATED, BASE WITH BASE COVER AND STAINLESS STEEL ANCHOR BOLTS FOR CONCRETE SLAB MOUNTING. PROVIDE GROUND LUG, HANDHOLE AND SWITCH MOUNTING WHERE SHOWN.	POLE MOUNT, SEE NOTE
4	VIEWING WINDOW WASHER LIGHT, ELEMENTAL LED ITEM # EL-LWASH-WP-491N-45CW WITH WATER RESISTANT END CAPS. SEE WWW.ELEMENTALLED.COM	SEE DETAIL THIS SHEET

NOTES:

1. POLES TO BE LITHONIA SSA104C WITH FITTINGS TO MOUNT FIXTURES AS SHOWN.
2. ALL FIXTURES TO BE AS NOTED OR EQUAL.

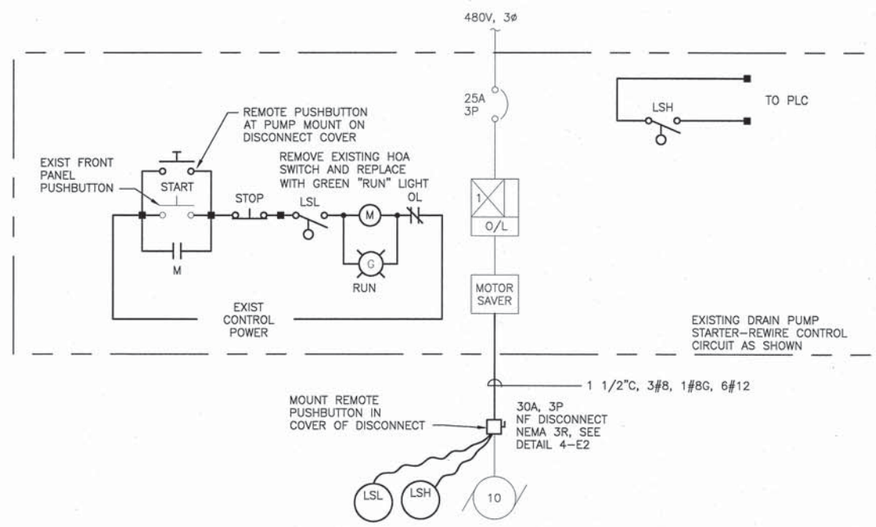

DRAIN PUMP STARTER REWIRE

NTS

SCREENED LINES INDICATE EXISTING AND HEAVY INDICATES WORK UNDER THIS CONTRACT. TIE FLOAT CORDS TO PUMP CABLE WITH HEAVY DUTY TIE-WRAPS SO LOW SWITCH TRIPS ABOUT 6 INCHES ABOVE TOP OF PUMP AND HIGH SWITCH TRIPS AT ELEVATION 26.0.

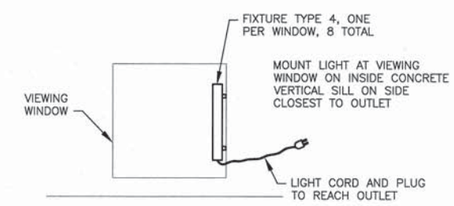

VIEWING WINDOW LIGHT INSTALLATION

SCALE: 1/4"=1'-0"

BAR LENGTH ON ORIGINAL DRAWING EQUALS ONE INCH, ADJUST SCALE ACCORDINGLY

HDR Fisheries DESIGN CENTER

REGISTERED PROFESSIONAL ENGINEER WILLIAM F. ETTLICH NO. 7625 EXP. 09/30/14 STATE OF CALIFORNIA

3/17/14

NO.	DATE	REVISION	BY
A	3/17/14	ISSUED FOR BIDS	WFE

SONOMA COUNTY WATER AGENCY

SCALE: AS SHOWN | DATE: 3.17.2014
DRAWN: EGS
REVIEWED:

Sonoma County Water Agency
Mirabel Fish Screen and Fish Ladder Replacement
ELECTRICAL DETAILS 1

FILE NAME: 164479_e08.dwg
CONTRACT NUMBER: ####
DRAWING NUMBER: E8
SHEET 98 OF 99

C:\pwworking\sea\d0645476\164479_E08

NOTES:

1. COMBINED EQUIPMENT LOADS PER 36" SPAN SHALL NOT EXCEED 500 LBS.
2. PROVIDE GROUNDING FOR OUTDOOR INSTALLATIONS. HOT DIPPED GALVANIZED AFTER FABRICATION.
3. ANCHORS: STAINLESS STEEL, 1/2" DIAMETER, 3 1/2" EMBEDMENT.
4. PROTECT SURFACES WITH DISSIMILAR MATERTIALS IN ACCORDANCE WITH SPECIFICATION 09905.

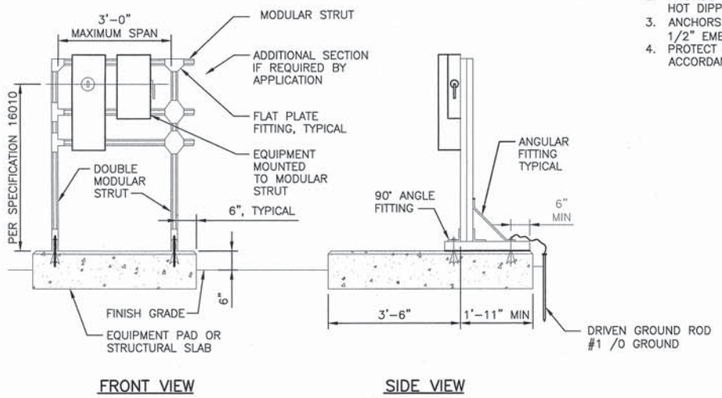

MODULAR EQUIPMENT RACK

NTS

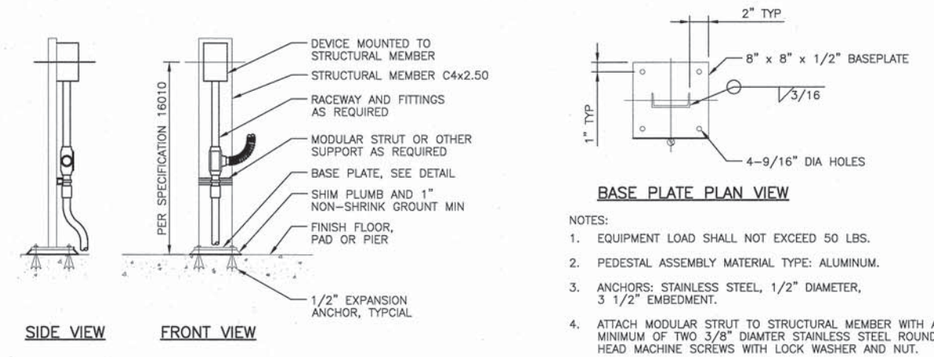

NOTES:

1. EQUIPMENT LOAD SHALL NOT EXCEED 50 LBS.
2. PEDESTAL ASSEMBLY MATERIAL TYPE: ALUMINUM.
3. ANCHORS: STAINLESS STEEL, 1/2" DIAMETER, 3 1/2" EMBEDMENT.
4. ATTACH MODULAR STRUT TO STRUCTURAL MEMBER WITH A MINIMUM OF TWO 3/8" DIAMTER STAINLESS STEEL ROUND HEAD MACHINE SCREWS WITH LOCK WASHER AND NUT.
5. PROTECT SURFACES WITH DISSIMILAR MATERIALS IN ACCORDANCE WITH SPECIFICATION 09905.

SINGLE DEVICE PEDESTAL

NTS

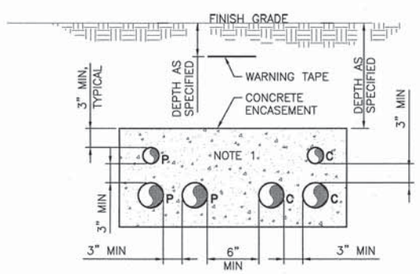

NOTES:

1. NUMBER OF CONDUITS AS REQUIRED FOR THE APPLICATION.
2. P SUBSCRIPT ELECTRICAL POWER OR CONTROL CONDUIT.
3. C SUBSCRIPT COMMUNICATION (TELEPHONE, DATA, INSTRUMENTATION) CONDUIT.

CONCRETE ENCASED DUCT BANK SECTION

NTS

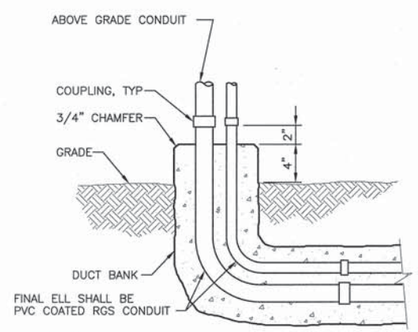

NOTE:
SEE1 DUCT BANK SECTION DETAIL FOR ADDITIONAL REQUIREMENTS.

CONDUIT TRANSITION TO ABOVE GROUND (EXTERIOR)

NTS

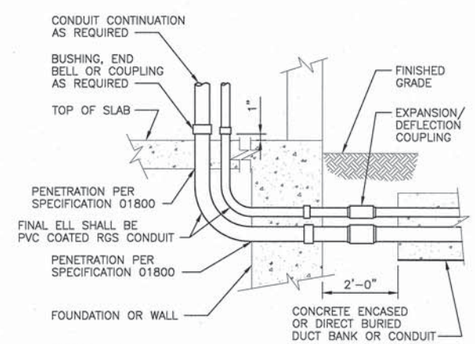

NOTE:
1. SEE DUCT BANK DETAIL FOR ADDITIONAL REQUIREMENTS.

CONDUIT TRANSITION TO ABOVE GROUND (EXTERIOR TO INTERIOR)

NTS

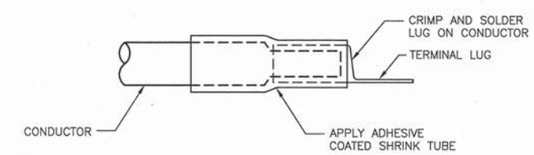

CONDUCTOR TERMINATION

NTS

APPLICABLE TO ALL TERMINATIONS ON PERMANENT CONDUCTORS WHICH CAN BE FLOODED

SEE SPECIFICATION SECTION 16493

BAR LENGTH ON ORIGINAL DRAWING EQUALS ONE INCH. ADJUST SCALE ACCORDINGLY

HDR Fisheries DESIGN CENTER

REGISTERED PROFESSIONAL ENGINEER WILLIAM F. ETTLICH NO. 7625 EXP. 09/30/14 STATE OF CALIFORNIA

3/17/14

NO.	DATE	REVISION	BY
A	3/17/14	ISSUED FOR BIDS	WFE

SONOMA COUNTY WATER AGENCY

SCALE: NONE | DATE: 3.17.2014
DRAWN: EGS
REVIEWED:

Sonoma County Water Agency
Mirabel Fish Screen and Fish Ladder Replacement
ELECTRICAL DETAILS 2

FILE NAME: 164479_e09.dwg
CONTRACT NUMBER: ####
DRAWING NUMBER: E9
SHEET 99 OF 99

C:\pwworking\sec\d0645478\164479_E09