SONOMA COUNTY WATER AGENCY

MIRABEL EMERGENCY DIVERSION

RUSSIAN RIVER - COTATI INTERTIE PROJECT

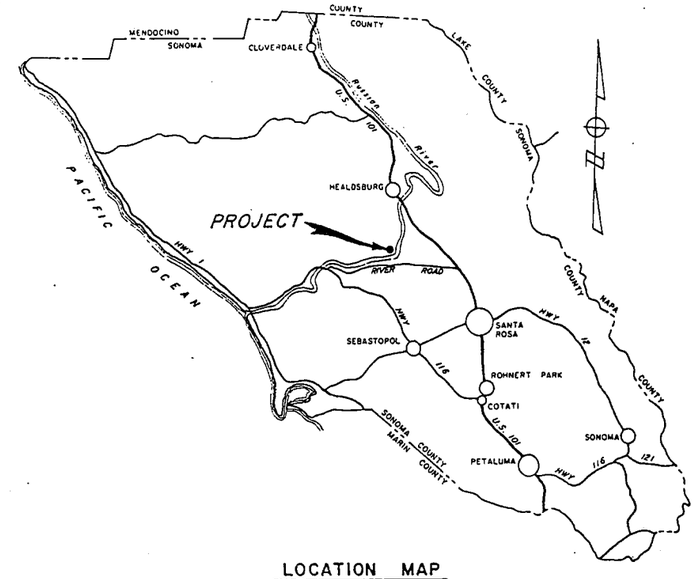

LOCATION MAP

RETURN TO DRAFTING FILES

SYMBOLS:

TREE TO BE REMOVED ONLY IF NECESSARY (PROTECT ALL TREES IN PLACE UNLESS OTHERWISE SPECIFIED)

ø DIAMETER

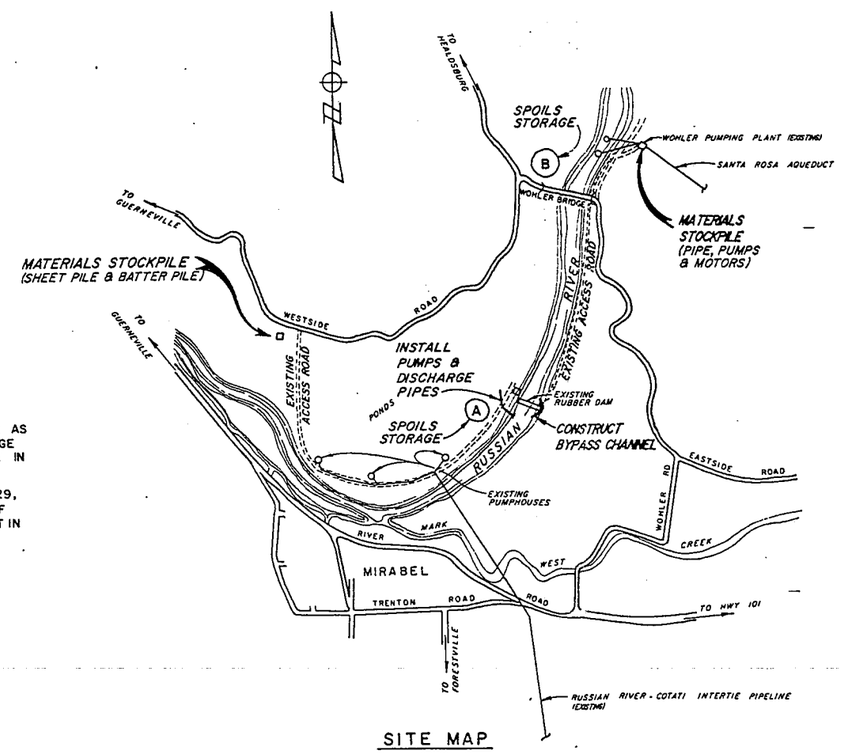

SITE MAP

NO SCALE

GENERAL NOTES:

1. HORIZONTAL DATUM: THE CALIFORNIA COORDINATE SYSTEM ZONE II AS SHOWN ON 1971 CONTROL MAP RECORDED IN BOOK 168 OF MAPS AT PAGE 16, SONOMA COUNTY RECORDS, AND ON SUPPLEMENT SHEETS ON FILE IN THE OFFICES OF THE AGENCY AND THE COUNTY SURVEYOR.
2. VERTICAL DATUM: U.S. NATIONAL GEODETIC MEAN SEA LEVEL OF 1929, BASED ON BENCH MARK "A 239 1935" AT THE SOUTHWEST CORNER OF WOHLER ROAD STEEL BRIDGE OVER RUSSIAN RIVER, A STD. DISK SET IN TOP OF CONCRETE CURB, 6 FT. FROM END (EL. 79.14).
3. FOR MORE INFORMATION ON SPOILS STORAGE, SEE SPECIFICATIONS.

INDEX TO DRAWINGS

SHEET NO.	DRAWING NO.	TITLE
1	60-5-102.271	LOCATION MAP & INDEX TO DRAWINGS
2	.272	GENERAL PLAN
3	.273	SHEET PILE DETAILS
4	.274	BATTER PILE DETAILS
5	.275	PIPE LAYING DETAILS
6	.276	INTAKE DETAILS
7	.277	CATWALK DETAILS
8	.278	ELECTRICAL DETAILS

THIS DRAWING REDUCED APPROXIMATELY HALF SIZE

REGISTERED PROFESSIONAL ENGINEER ROBERT J. CORTELYOU No. 23790 Exp. 12/31/89 CIVIL STATE OF CALIFORNIA

REGISTERED PROFESSIONAL ENGINEER WILLARD R. STILLMAN No. 13480 7/93 CIVIL STATE OF CALIFORNIA

REGISTERED PROFESSIONAL ENGINEER DAVID R. ALLEN Exp. 9-30-89 20481 CIVIL STATE OF CALIFORNIA

No.	Date	REVISION	By

MIRABEL EMERGENCY DIVERSION

LOCATION MAP & INDEX TO DRAWINGS

SCALE: NONE | APPROVED CHIEF ENGINEER | DRAWN: SALLY

DATE: MAY 1989 | RCE 13480 | CHECKED

SONOMA COUNTY WATER AGENCY

DESIGNED RCE 20481 | SUBMITTED RCE 23790 | DRAWING NUMBER 60-5-102.271

SHEET NO. 1

PRINTED ON DIFPO NO. 1028 CLEARPRINT

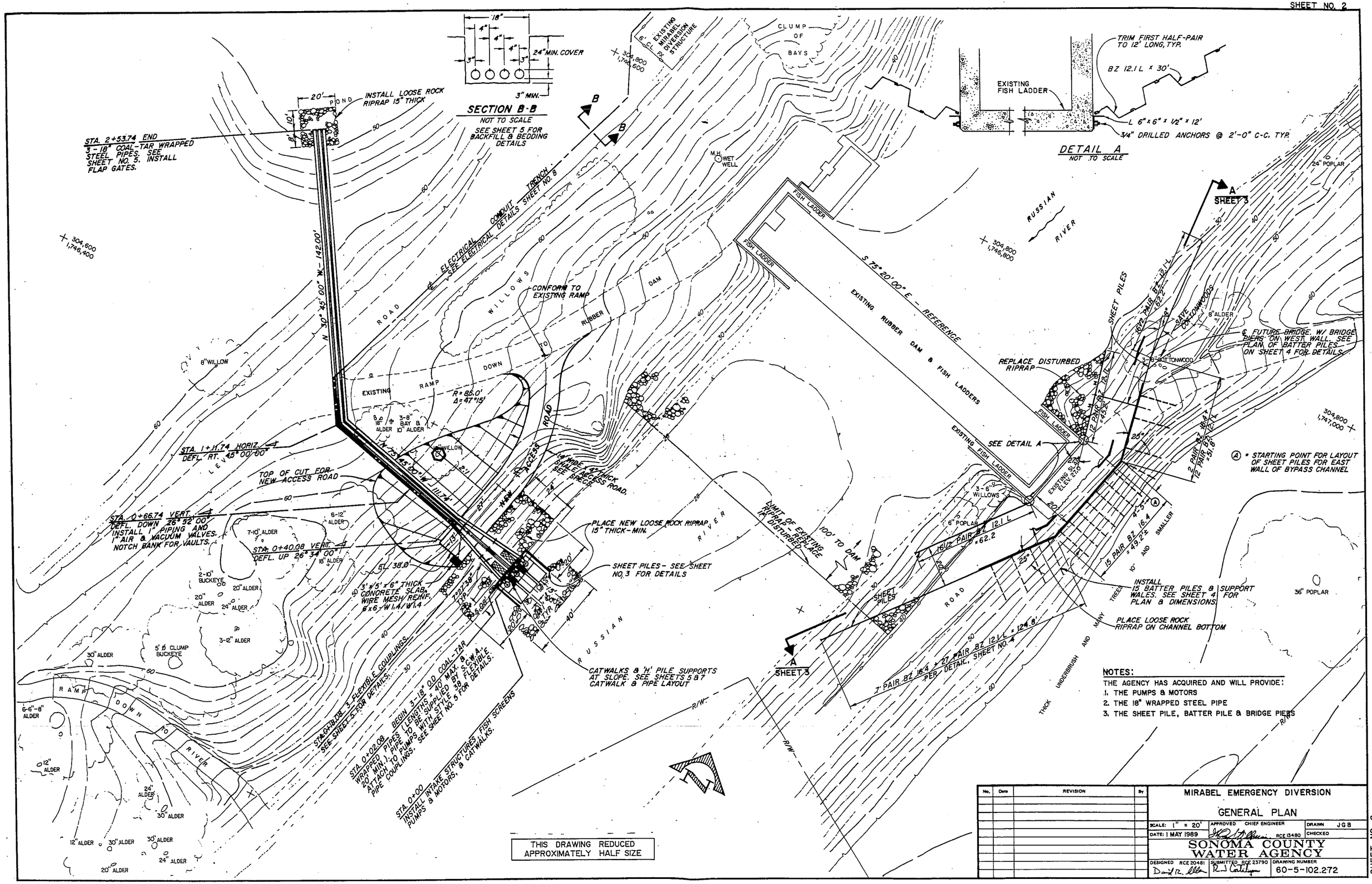

NOTES:

THE AGENCY HAS ACQUIRED AND WILL PROVIDE:

1. THE PUMPS & MOTORS
2. THE 18" WRAPPED STEEL PIPE
3. THE SHEET PILE, BATTER PILE & BRIDGE PIERS

No.	Date	REVISION	By

MIRABEL EMERGENCY DIVERSION

GENERAL PLAN

SCALE: 1" = 20' | APPROVED CHIEF ENGINEER | DRAWN JGB

DATE: 1 MAY 1989 | RCE 13480 | CHECKED

SONOMA COUNTY WATER AGENCY

DESIGNED RCE 20481 | SUBMITTED RCE 23790 | DRAWING NUMBER 60-5-102.272

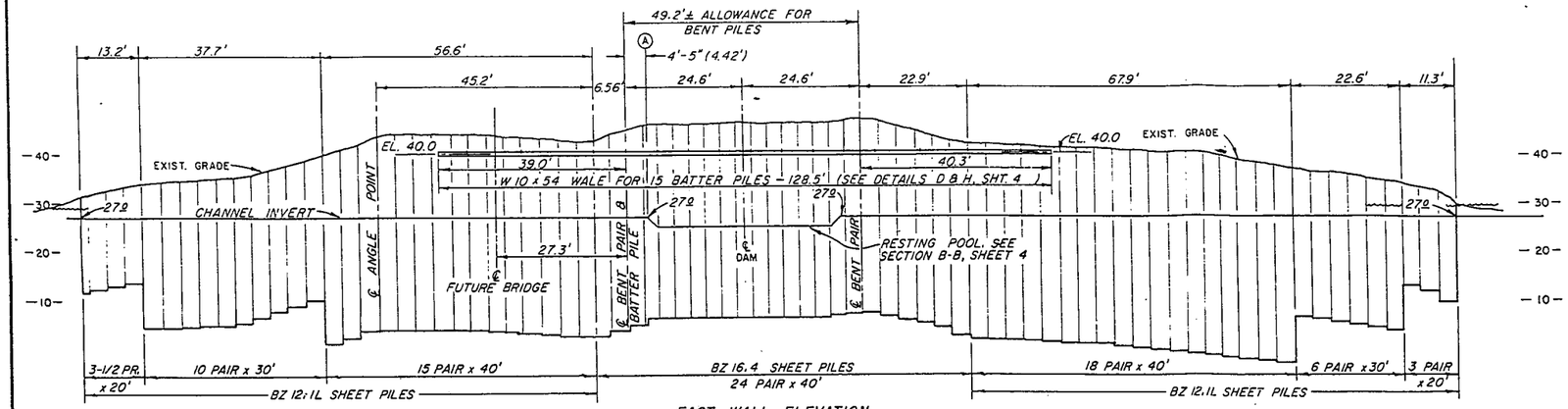

EAST WALL ELEVATION
FROM RIVER SIDE OF CHANNEL
SCALE: 1" = 15'

AGENCY PROVIDED PILE SCHEDULE

PAIRS	MODULE	15'	20'	30'	40'
B Z 16.4	3.28'	0	0	0	24
B Z 12.1 L	3.77'	15	17	34	33

BATTER PILES
15 - HP 12 x 74 x 40'

BRIDGE PIERS
2 - HP 12 x 74 x 40'

Ⓐ = STARTING POINT FOR LAYOUT OF SHEET PILES FOR THE EAST WALL OF BYPASS CHANNEL.

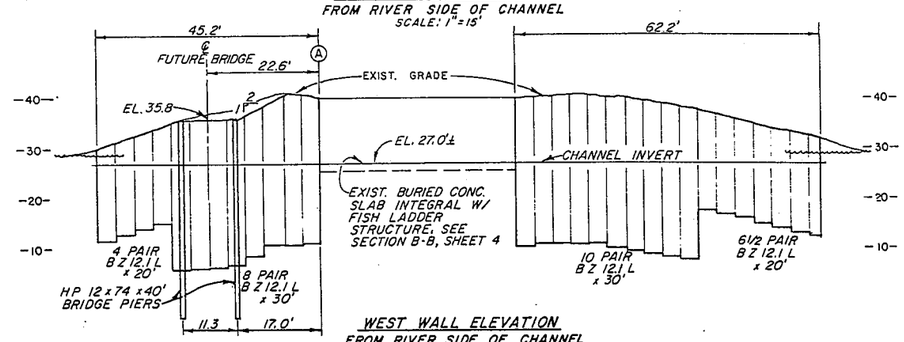

WEST WALL ELEVATION
FROM RIVER SIDE OF CHANNEL
SCALE: 1" = 15'

QUANTITIES (sq. ft.)

LENGTH	40'	30'	20'	15'	TOTALS
EAST WALL CHANNEL	8,125	1,810	490	0	10,425
WEST WALL CHANNEL	0	2,036	792	0	2,828
AROUND INTAKES	0	0	0	848	848
TOTALS	8,125	3,846	1,282	848	14,101
B Z 12.1 L	4,976	3,846	1,282	848	10,952
B Z 16.4	3,149	0	0	0	3,149

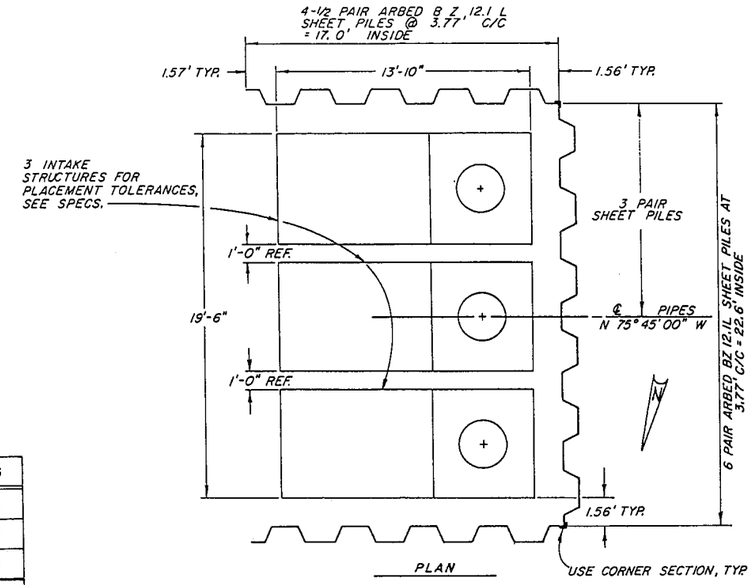

PLAN

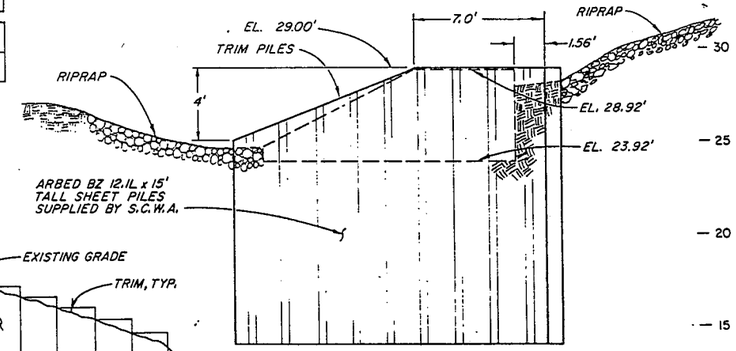

ELEVATION

SHEET PILE DETAILS AROUND INTAKES
(LOOKING DOWNSTREAM)
SCALE 1/4" = 1'-0"

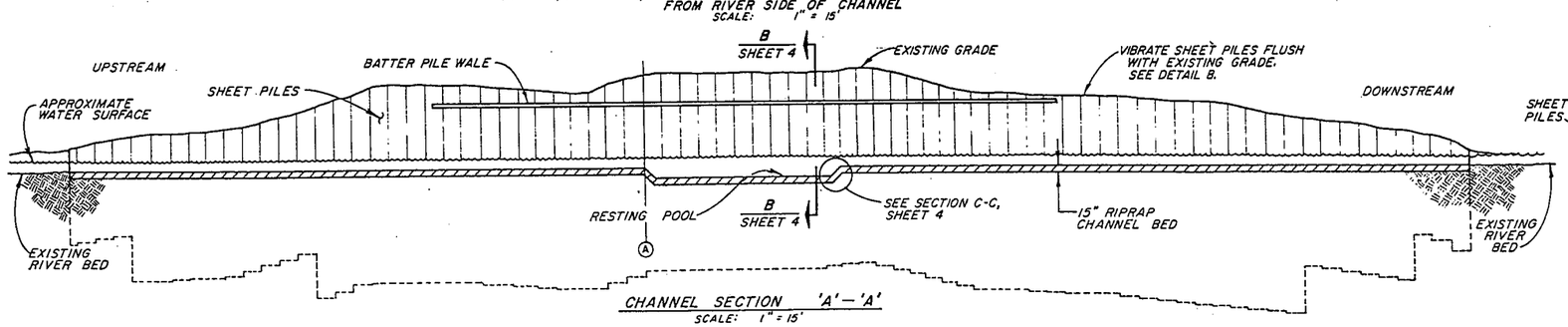

CHANNEL SECTION 'A' - 'A'
SCALE: 1" = 15'

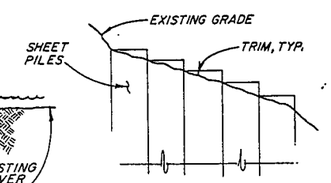

DETAIL B
NOT TO SCALE

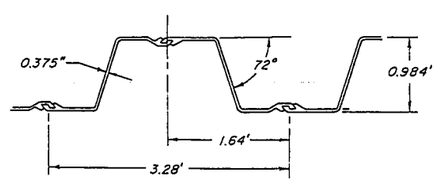

ARBED B Z 16.4 STEEL SHEET PILING
SCALE: 1" = 1'-0"

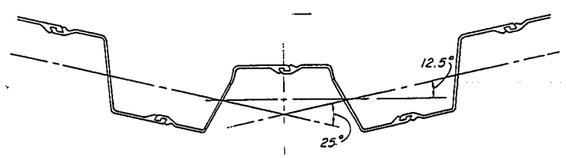

BENT PILE MODIFIED B Z 16.4
SCALE: 1" = 1'-0"

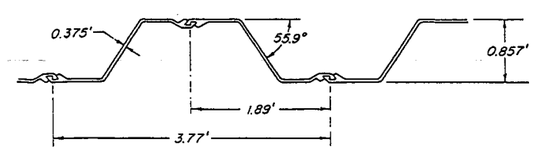

ARBED B Z 12.1 L STEEL SHEET PILING
SCALE: 1" = 1'-0"

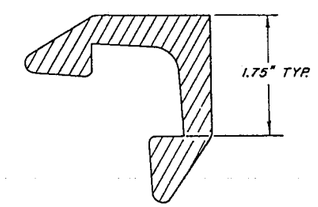

ARBED B Z CORNER SECTION MODEL C C 12
NOT TO SCALE

THIS DRAWING REDUCED APPROXIMATELY HALF SIZE

No.	Date	REVISION	By

MIRABEL EMERGENCY DIVERSION

SHEET PILE DETAILS

SCALE: AS SHOWN | APPROVED CHIEF ENGINEER | DRAWN JGB
DATE: 1 MAY 1989 | RCE 13480 | CHECKED

SONOMA COUNTY WATER AGENCY

DESIGNED RCE 20481 | SUBMITTED RCE 23790 | DRAWING NUMBER 60-5-102.273

SHEET NO. 3

PRINTED ON DIEPO NO 1030 CLEARPRINT

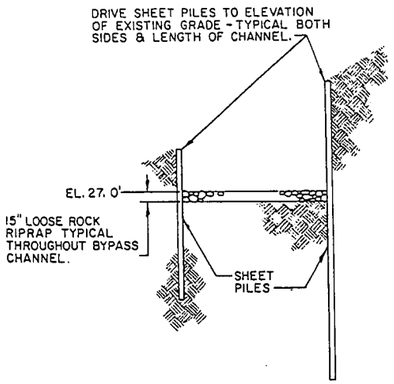

SECTION A-A
SCALE: 1" = 10'

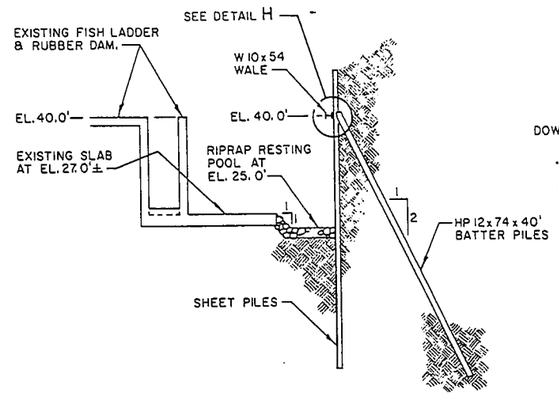

SECTION B-B
SCALE: 1" = 10'

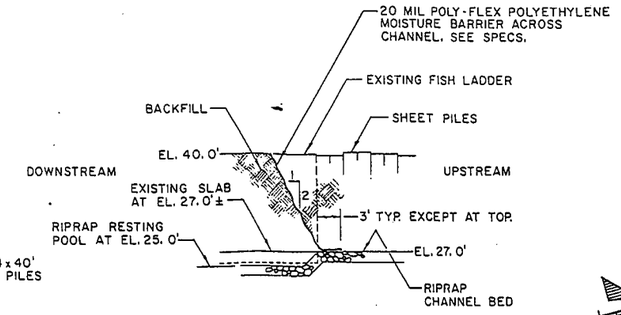

SECTION C-C
SCALE: 1" = 10'

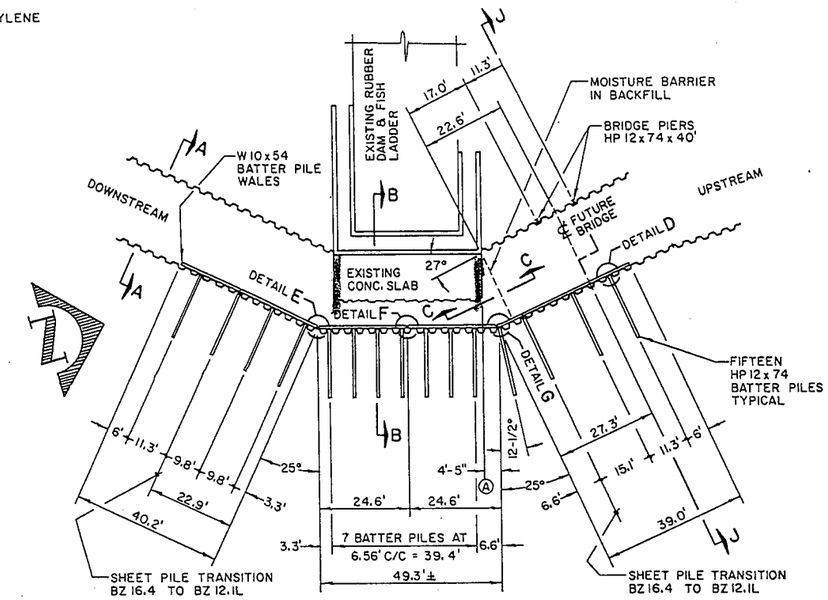

PLAN OF BATTER PILES & BRIDGE PIERS
SCALE: 1" = 20'

NOTE: REFER TO PLAN OF BYPASS CHANNEL ON SHEET NO. 2 FOR SHEET PILE LAYOUT DIMENSIONS NOT SHOWN.

Ⓐ = STARTING POINT FOR LAYOUT OF SHEET PILES FOR EAST WALL OF BYPASS CHANNEL

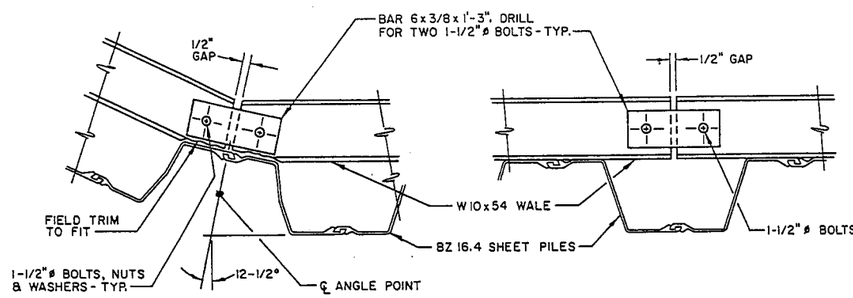

DETAIL E
SCALE: 1" = 1'-0"

DETAIL F
SCALE: 1" = 1'-0"

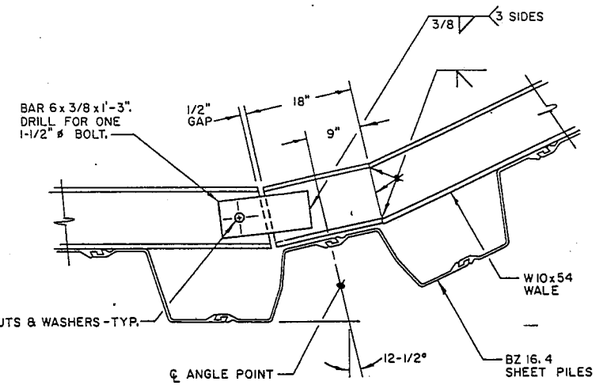

DETAIL G
SCALE: 1" = 1'-0"

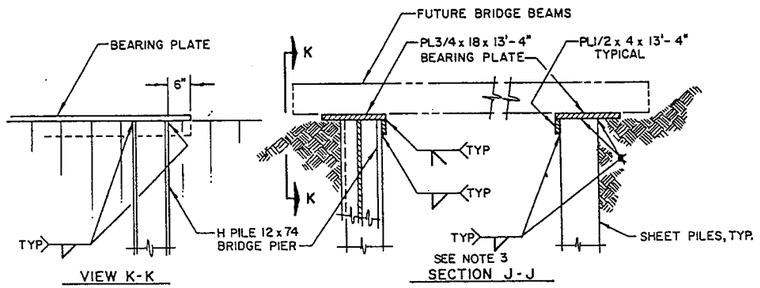

VIEW K-K

SECTION J-J

BEARING PLATES FOR FUTURE BRIDGE
SCALE: 1/2" = 1'-0"

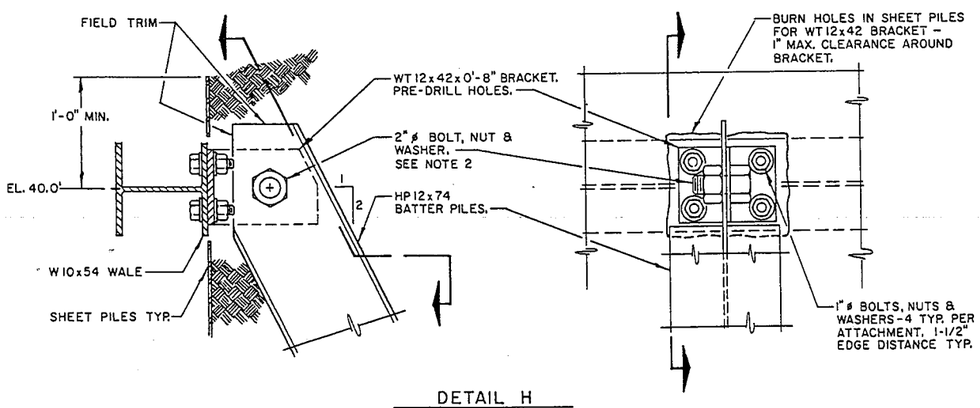

DETAIL H
BATTER PILE TO WALE ATTACHMENT
SCALE: 1-1/2" = 1'-0"

THIS DRAWING REDUCED APPROXIMATELY HALF SIZE

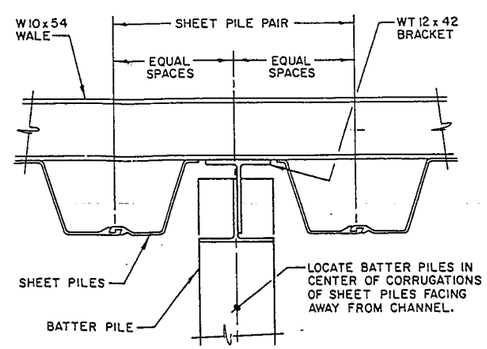

DETAIL D
SCALE: 1" = 1'-0"

GENERAL NOTES

1. ALL HOLES SHALL BE DRILLED EXCEPT WHERE NOTED. NO BOLT HOLES SHALL BE FREEHAND CUT.
2. HOLES IN THE BATTER PILES FOR THE 2" BOLTS MAY BE FLAME CUT, BUT A HOLE JIG MUST BE USED. THESE HOLES MAY NOT BE MADE BEFORE THE PILES ARE VIBRATED INTO THEIR FINAL POSITION.
3. GALVANIZING OF THE BEARING PLATES IN SECTION J-J IS NOT REQUIRED.

No.	Date	REVISION	By

MIRABEL EMERGENCY DIVERSION

BATTER PILE DETAILS

SCALE: AS SHOWN | APPROVED CHIEF ENGINEER | DRAWN SALLY
DATE: 1 MAY 1989 | RCE 13480 | CHECKED

SONOMA COUNTY WATER AGENCY

DESIGNED RCE 20481 | SUBMITTER RCE 23790 | DRAWING NUMBER 60-5-102.274

PRINTED ON DIEPO NO 1030 CLEARPRINT

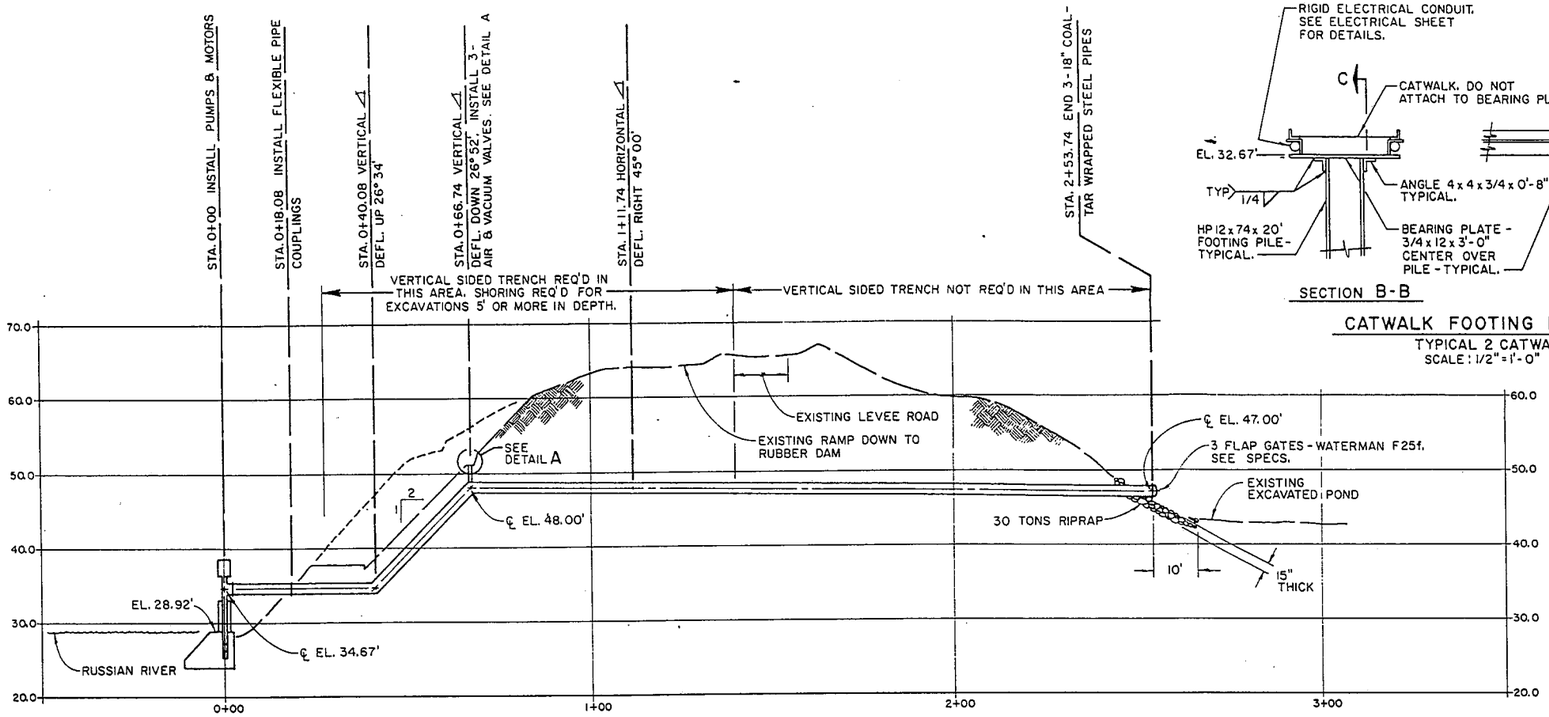

DISCHARGE PIPING - PROFILE

SCALE: HORIZ. 1" = 20'
VERT. 1" = 10'

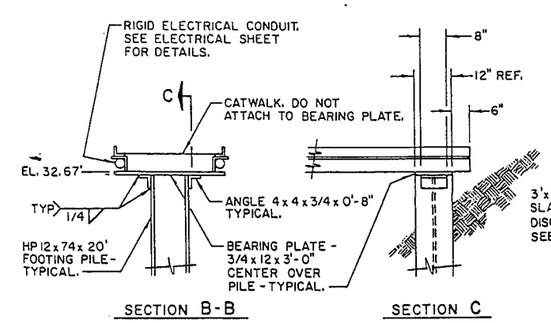

CATWALK FOOTING DETAIL

TYPICAL 2 CATWALKS
SCALE: 1/2" = 1'-0"

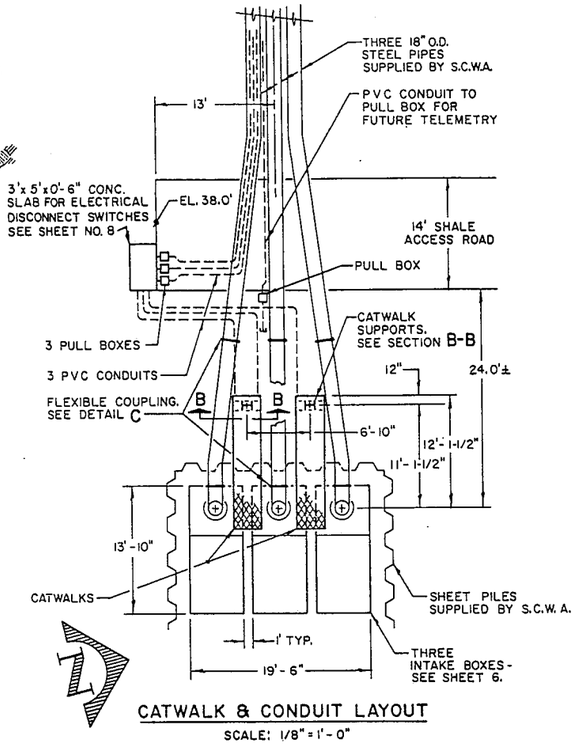

CATWALK & CONDUIT LAYOUT

SCALE: 1/8" = 1'-0"

GENERAL NOTES

1. CONTRACTOR SHALL FURNISH ALL MATERIALS NOT NOTED AS SUPPLIED BY S.C.W.A.

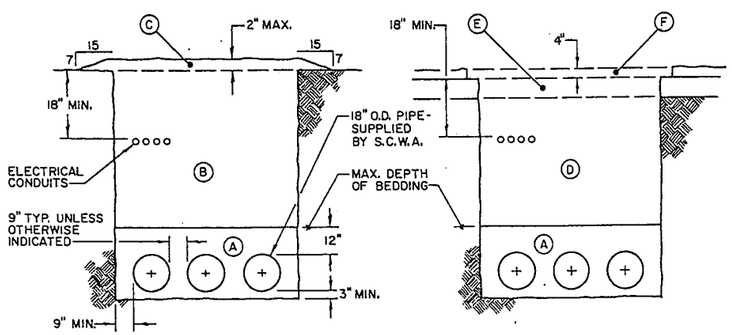

BACKFILL & BEDDING DETAILS FOR PIPES & ELECTRICAL CONDUITS

NO SCALE

(A) BEDDING TO CONFORM WITH THE SPECIAL PROVISIONS (SAND EQUIVALENT OF 30 OR BETTER) COMPACTED TO 90%.

(B) NATIVE MATERIAL TO BE MECHANICALLY COMPACTED PER STD. SPECS. 306-1.3.2 TO A RELATIVE DENSITY OF 90%.

(C) EXCESS SPOIL TO BE MOUNDED EVENLY OVER TRENCH.

(D) STRUCTURE BACKFILL MATERIAL GRADATION PER STD. SPECS. 300-3.5, COMPACTED TO 95% WITHIN 3' OF FINISHED GRADE, 90% BELOW.

(E) CLASS 2 AGGREGATE BASE 6" MIN. WITH COMPACTION OF 95%

(F) SHALE COMPACTED TO 95%. SEE SPECIFICATIONS.

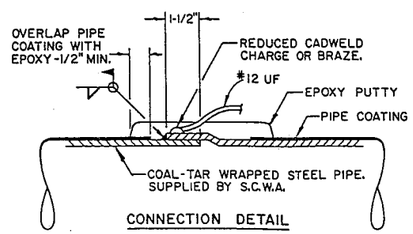

CONNECTION DETAIL

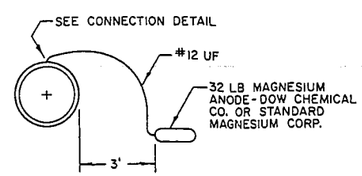

GALVANIC ANODE WITHOUT TEST LEAD INSTALLATION

NO SCALE

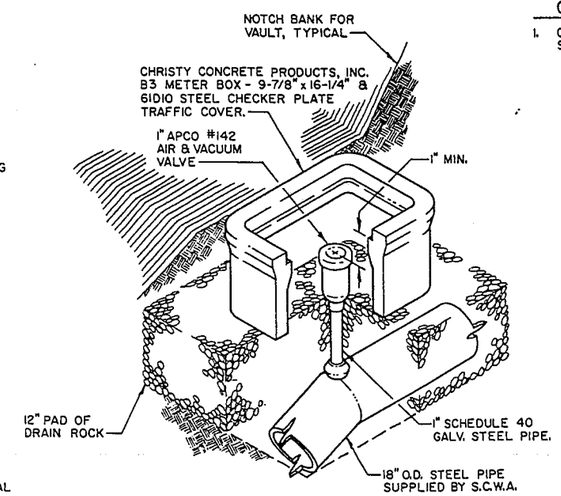

DETAIL A - (3-REQ'D) AIR & VACUUM VALVE

NO SCALE

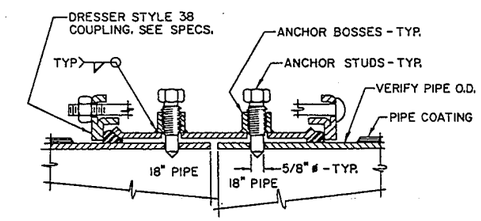

DETAIL C

FLEXIBLE PIPE COUPLING
(6 REQUIRED)
NO SCALE

THIS DRAWING REDUCED APPROXIMATELY HALF SIZE

No.	Date	REVISION	By

MIRABEL EMERGENCY DIVERSION

PIPE LAYING DETAILS

SCALE: AS SHOWN	APPROVED CHIEF ENGINEER	DRAWN SALLY
DATE: 1 MAY 1989	RCE 13480	CHECKED

SONOMA COUNTY WATER AGENCY

DESIGNED RCE 20481	SUBMITTED RCE 23790	DRAWING NUMBER
David R. Allen	R. J. Cartwright	60-5-102.275

PRINTED ON DEPO NO. 1038 CLEARPRINT

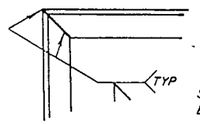

DETAIL E
NO SCALE

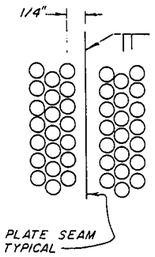

DETAIL D
NO SCALE

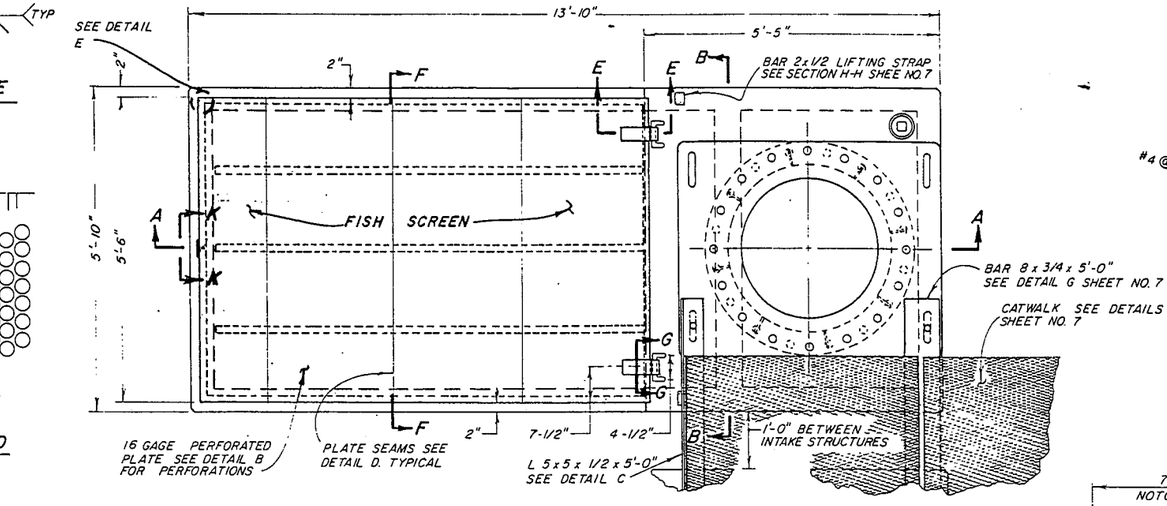

PLAN
SCALE 3/4" = 1'-0"
(3 REQUIRED)

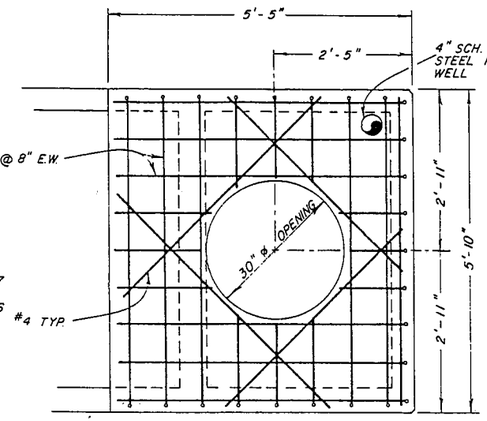

SECTION C-C
SCALE 3/4" = 1'-0"

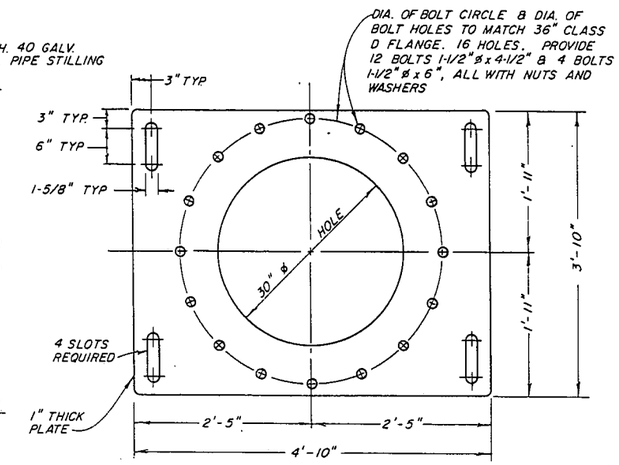

DETAIL A
SOLE PLATE
SCALE 1" = 1'-0"

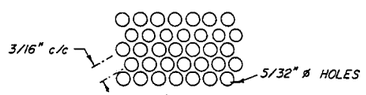

DETAIL B
NO SCALE

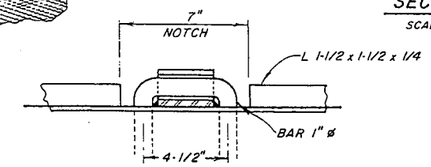

SECTION G-G
SCALE 3" = 1'-0"

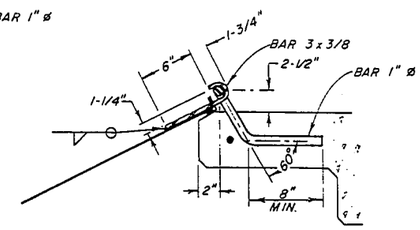

SECTION E-E
SCALE 1-1/2" = 1'-0"

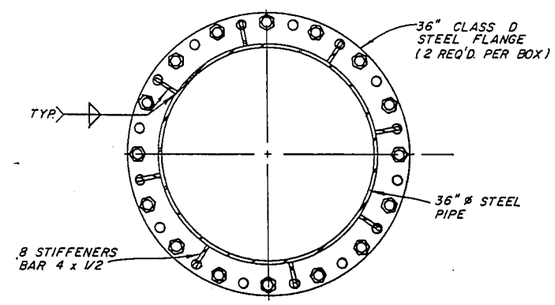

SECTION D-D
SCALE 1" = 1'-0"

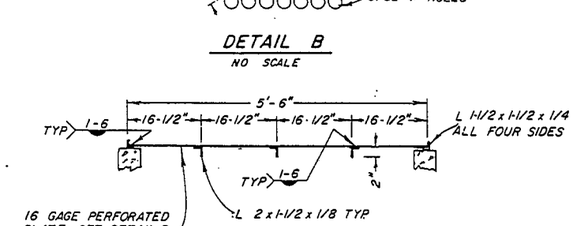

SECTION F-F
SCALE 3/4" = 1'-0"

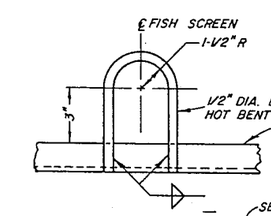

SECTION K-K
SCALE 3" = 1'-0"

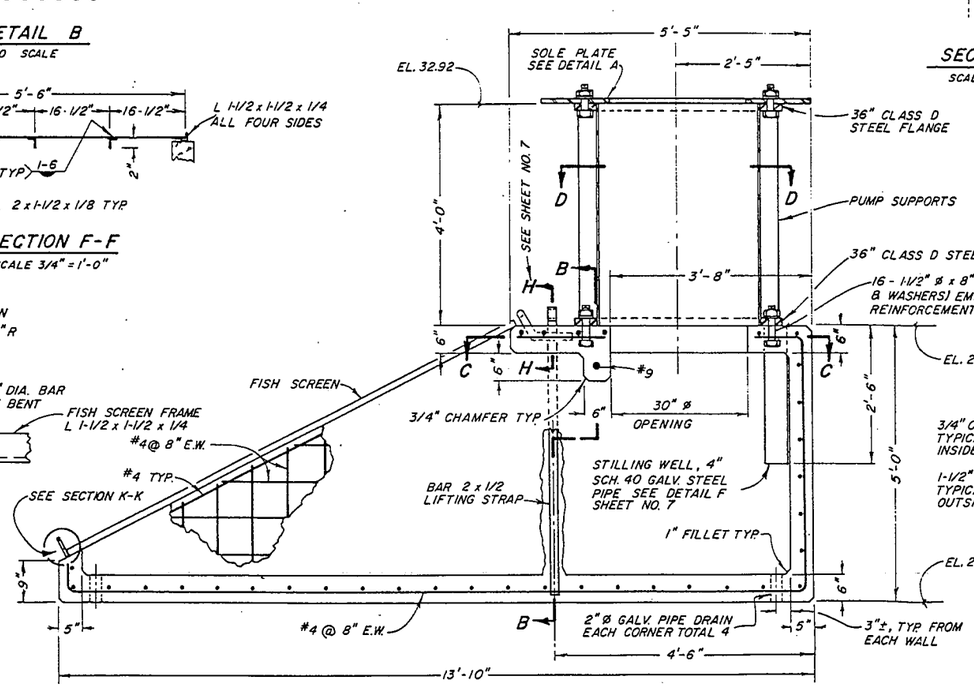

SECTION A-A
SCALE 3/4" = 1'-0"

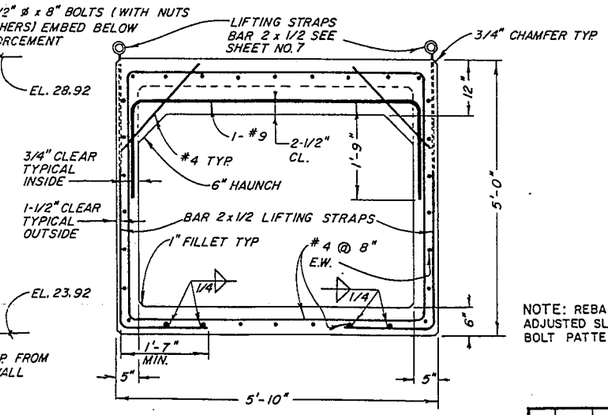

SECTION B-B
SCALE 3/4" = 1'-0"

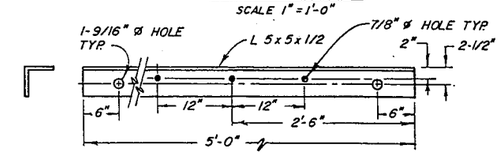

DETAIL C
(2 REQUIRED)
SCALE 1" = 1'-0"

NOTE: REBAR IN TOP SLAB MAY BE ADJUSTED SLIGHTLY TO ACCOMMODATE BOLT PATTERN.

THIS DRAWING REDUCED APPROXIMATELY HALF SIZE

No.	Date	REVISION	By

MIRABEL EMERGENCY DIVERSION

INTAKE DETAILS

SCALE: AS SHOWN	APPROVED CHIEF ENGINEER	DRAWN ADF
DATE: 1 MAY 1989	RCE 13480	CHECKED

SONOMA COUNTY WATER AGENCY

DESIGNED RCE 20481	SUBMITTED RCE 23790	DRAWING NUMBER
		60-5-102.276

SHEET NO. 6

PRINTED ON DIETO NO. 1030 CLEARPRINT

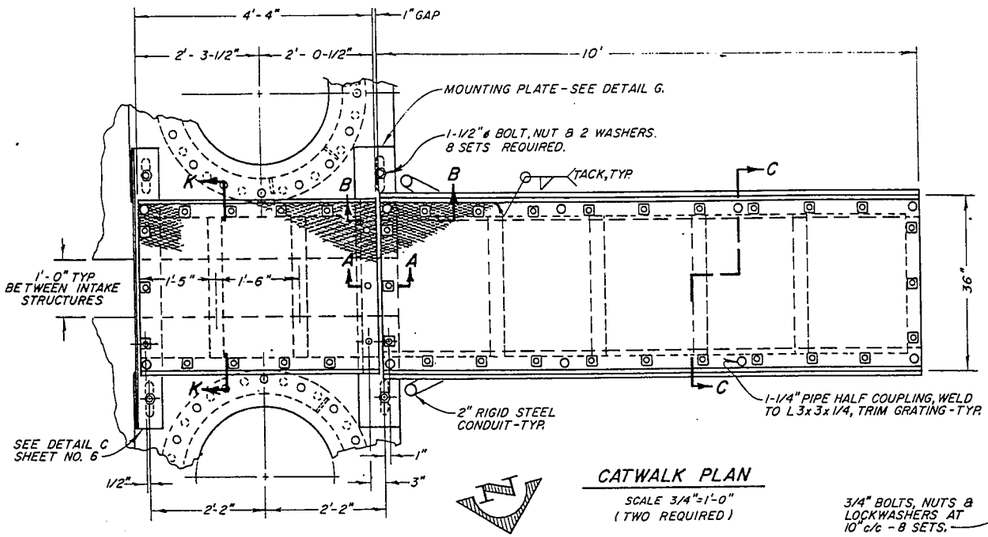

CATWALK PLAN

SCALE 3/4"=1'-0"
(TWO REQUIRED)

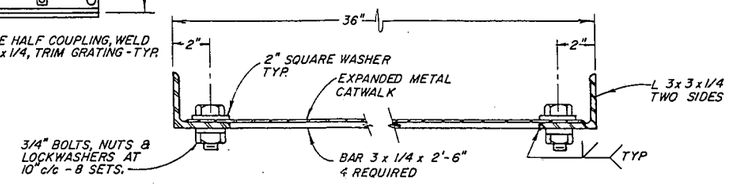

SECTION K-K

(CATWALK BETWEEN PUMPS)
SCALE 3"=1'-0"

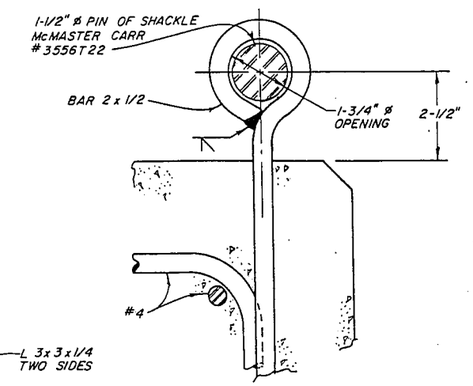

SECTION H-H

LIFTING STRAP (2 REQUIRED PER BOX)
HALF SIZE
SEE SHEET NO. 6

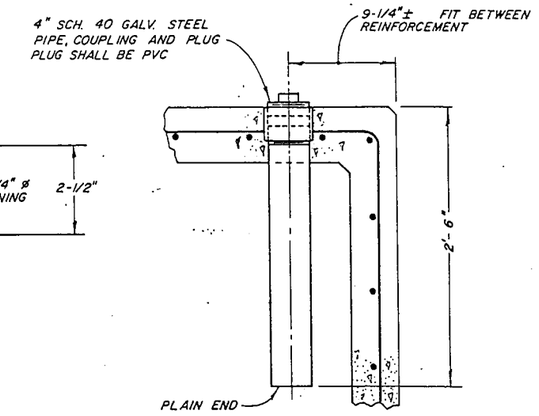

DETAIL F (STILLING WELL)

SCALE 1-1/2"=1'-0"
SEE SHEET NO. 6

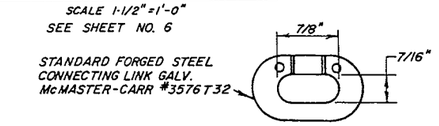

STANDARD FORGED STEEL CONNECTING LINK GALV.
McMASTER-CARR #3576T32

CONNECTING LINK

USE TO ATTACH BOLT SNAP TO CHAIN. TYPICAL

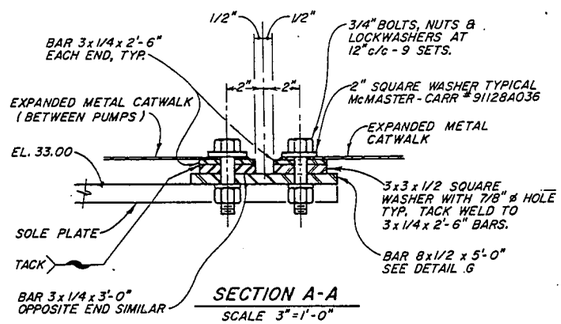

SECTION A-A

SCALE 3"=1'-0"

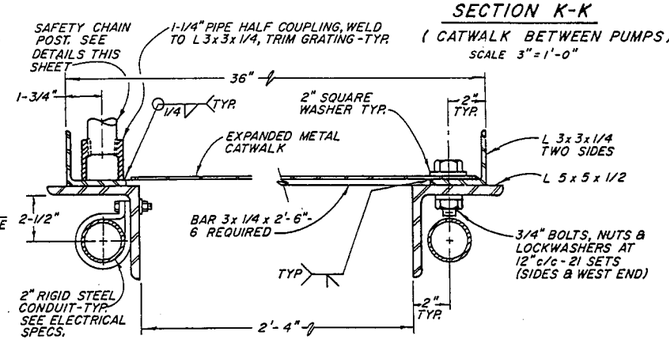

SECTION C-C

ACCESS CATWALK
SCALE 3"=1'-0"

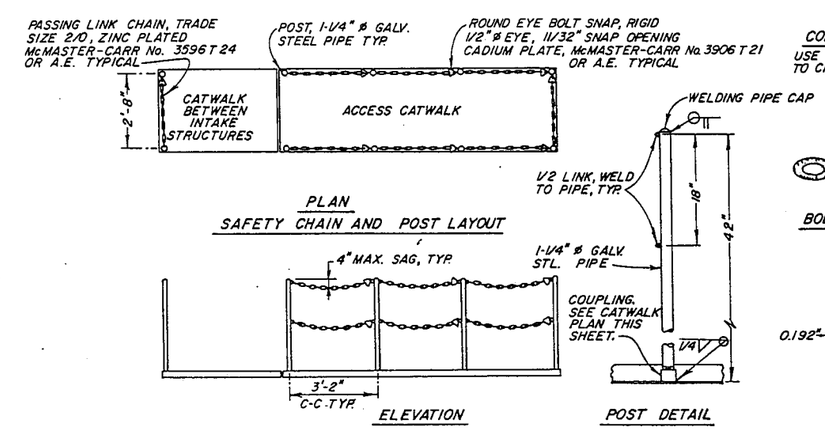

PLAN

SAFETY CHAIN AND POST LAYOUT

BOLT SNAP

ELEVATION

POST DETAIL

CHAIN

SAFETY CHAIN & POST DETAILS

NO SCALE

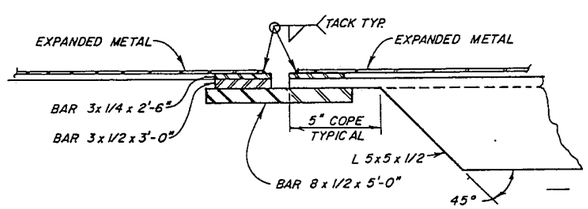

SECTION B-B

SCALE 3"=1'-0"

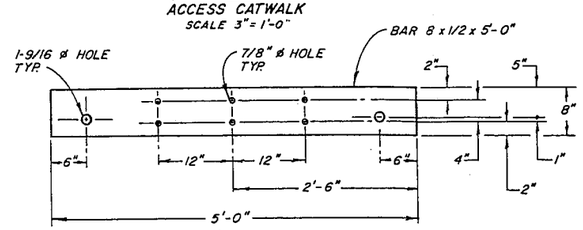

DETAIL G

(MOUNTING PLATE)
SCALE 1"=1'-0"
(2 REQUIRED)

NOTES:

1. CATWALK SHALL BE GALVANIZED EXPANDED METAL WEIGHING 5 lb. PER SQUARE FOOT.
2. BOLTS SHALL BE ASTM A325. ALL BOLTS, NUTS & WASHERS TO BE CADMIUM PLATED.
3. ALL STRUCTURAL STEEL AND MISCELLANEOUS METALWORK SHALL BE HOT-DIPPED GALVANIZED AFTER FABRICATION.
4. THERE SHALL BE TWO COMPLETE CATWALK ASSEMBLIES. SEE SHEET 5.

THIS DRAWING REDUCED APPROXIMATELY HALF SIZE

No.	Date	REVISION	By

MIRABEL EMERGENCY DIVERSION

CATWALK DETAILS

SCALE: AS SHOWN	APPROVED CHIEF ENGINEER	DRAWN ADF
DATE: 1 MAY 1989	RCE 13480	CHECKED

SONOMA COUNTY WATER AGENCY

DESIGNED RCE 20481	SUBMITTED RCE 23790	DRAWING NUMBER
David R. Ale	R J Collyer	60-5-102.277

PRINTED ON DIEPO NO. 1030 CLEARPRINT

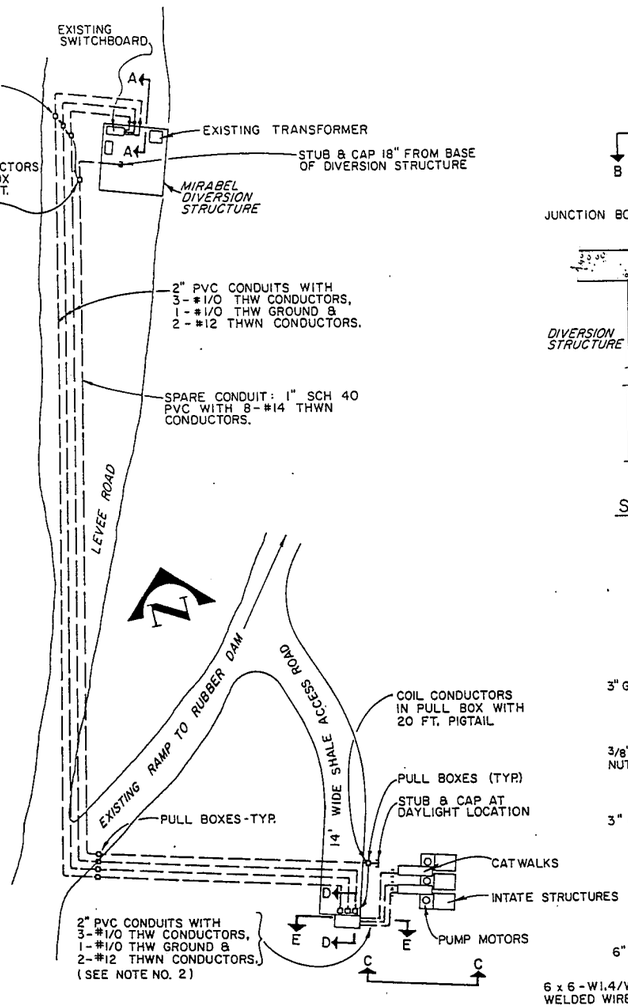

ELECTRICAL PLAN
NOT TO SCALE

MAKE FOLLOWING MODIFICATIONS TO EXISTING SWITCHBOARD:

1. LEAVE SUFFICIENT CABLE LENGTH ON MOTOR CONDUCTORS TO REACH THE LOAD LUGS OF THE EXISTING 50 H.P. & 100 H.P. MOTOR STARTERS. DO NOT CONNECT LEADS. TAPE ENDS & TIE BACK FROM LIVE PARTS.
2. COIL 15' FEET OF #12 WIRES FROM NEW MOTORS & TAPE ENDS
3. ALL WIRES & CABLES RUN INSIDE THE SWITCHBOARD SHALL BE PROTECTED BY RACEWAY. (SEE SECTION B-B)

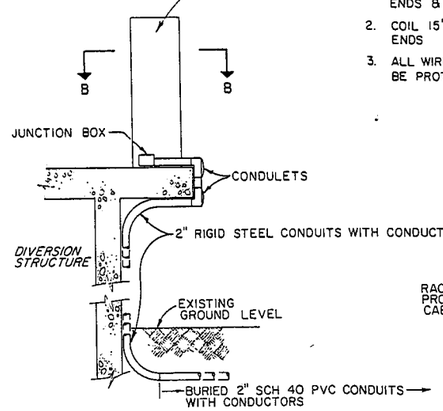

SECTION A-A
NOT TO SCALE

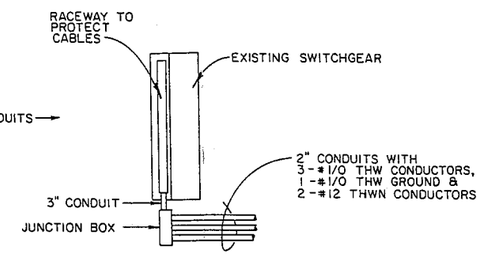

SECTION B-B
NOT TO SCALE

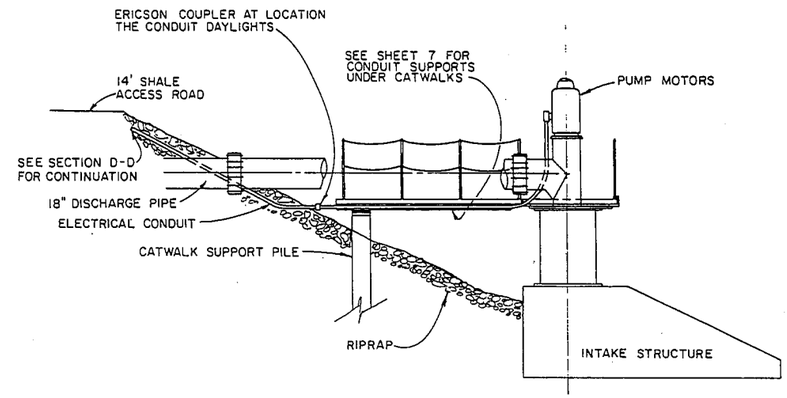

SECTION C-C
NOT TO SCALE

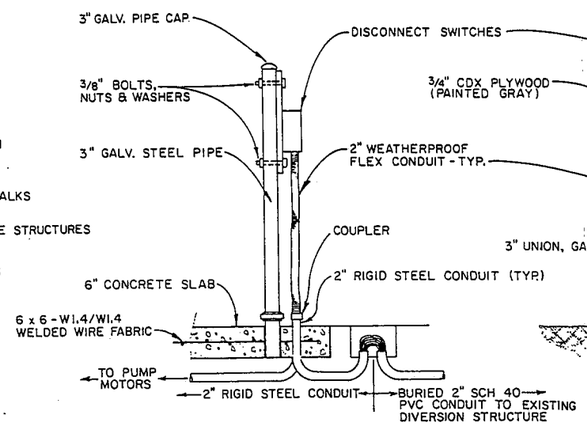

SECTION D-D
NOT TO SCALE

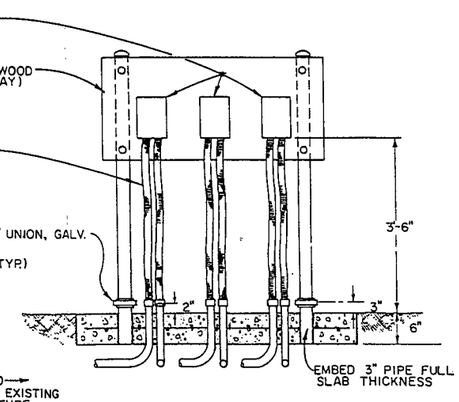

SECTION E-E
NOT TO SCALE

SYMBOLS

- EXPOSED CONDUIT
- BURIED CONDUIT
- PULL BOX

NOTES

1. THE CONTRACTOR SHALL MODIFY CONDUIT RUNS TO SUIT EQUIPMENT PROVIDED. ANY MODIFICATIONS TO CONDUIT RUNS SHALL BE APPROVED BY THE ENGINEER.
2. COIL 3' OF SPARE #12 CONDUCTORS IN MOTOR WEATHER HEAD.
3. SEE SHEET NO. 5 FOR BEDING & BACKFILL DETAILS.

THIS DRAWING REDUCED APPROXIMATELY HALF SIZE

CONTROL SYSTEM ENGINEER RICHARD C. KELLY No. 108 Exp. 3-31-90 STATE OF CALIFORNIA

No.	Date	REVISION	By

MIRABEL EMERGENCY DIVERSION

ELECTRICAL DETAILS

SCALE: AS SHOWN | APPROVED CHIEF ENGINEER | DRAWN JGB
DATE: 1 MAY 1989 | RCE 13480 | CHECKED

SONOMA COUNTY WATER AGENCY

DESIGNED CSE 106 R Kelly | SUBMITTED RCE 23790 R J Cortelyou | DRAWING NUMBER 60-5-102.278

SHEET NO. 8

PRINTED ON DIEFO NO 1020 CLEARPRINT

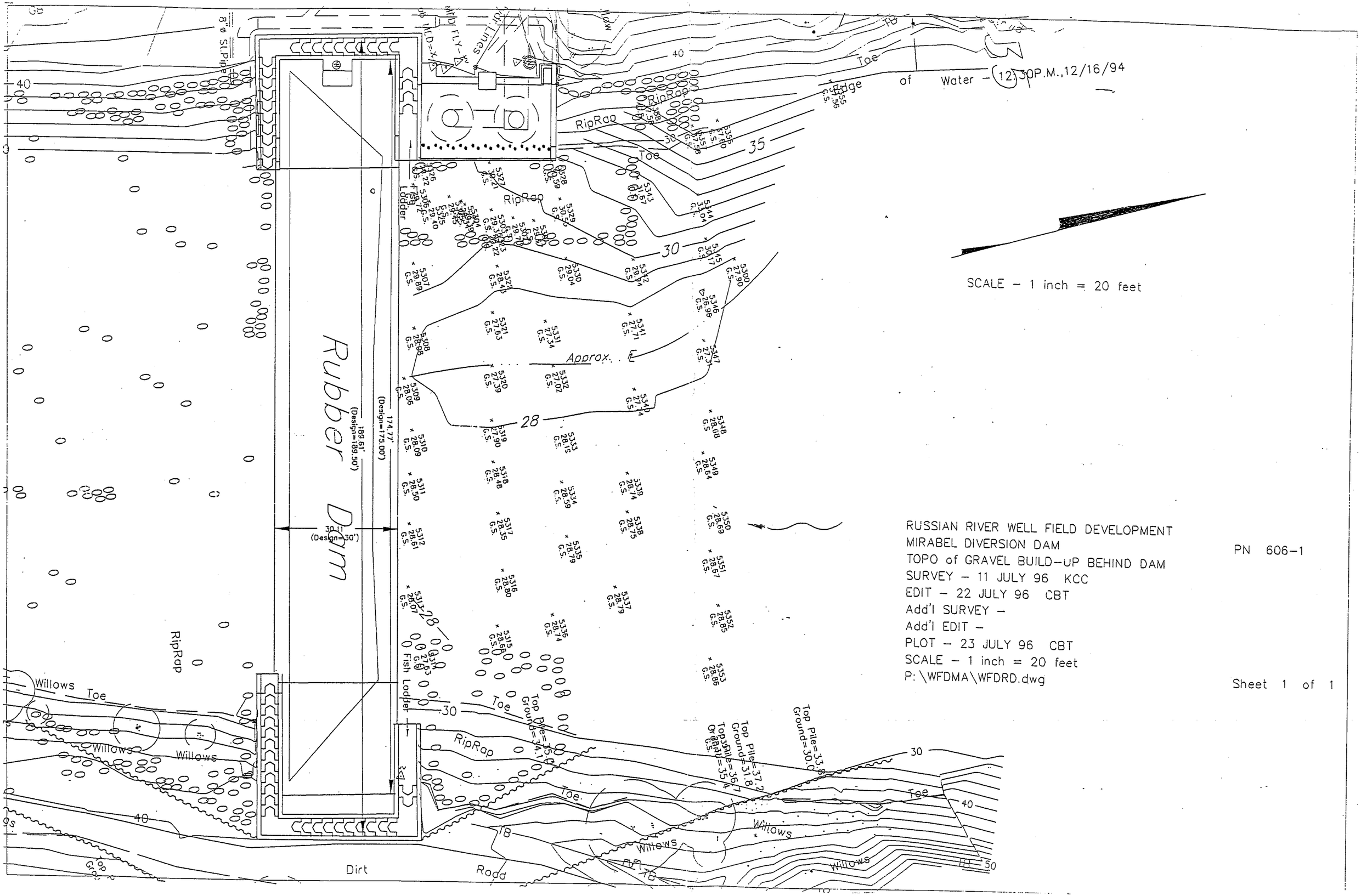

RUSSIAN RIVER WELL FIELD DEVELOPMENT
MIRABEL DIVERSION DAM
TOPO of GRAVEL BUILD-UP BEHIND DAM
SURVEY - 11 JULY 96 KCC
EDIT - 22 JULY 96 CBT
Add'l SURVEY -
Add'l EDIT -
PLOT - 23 JULY 96 CBT
SCALE - 1 inch = 20 feet
P:\WFDMA\WFDRD.dwg

PN 606-1

Sheet 1 of 1

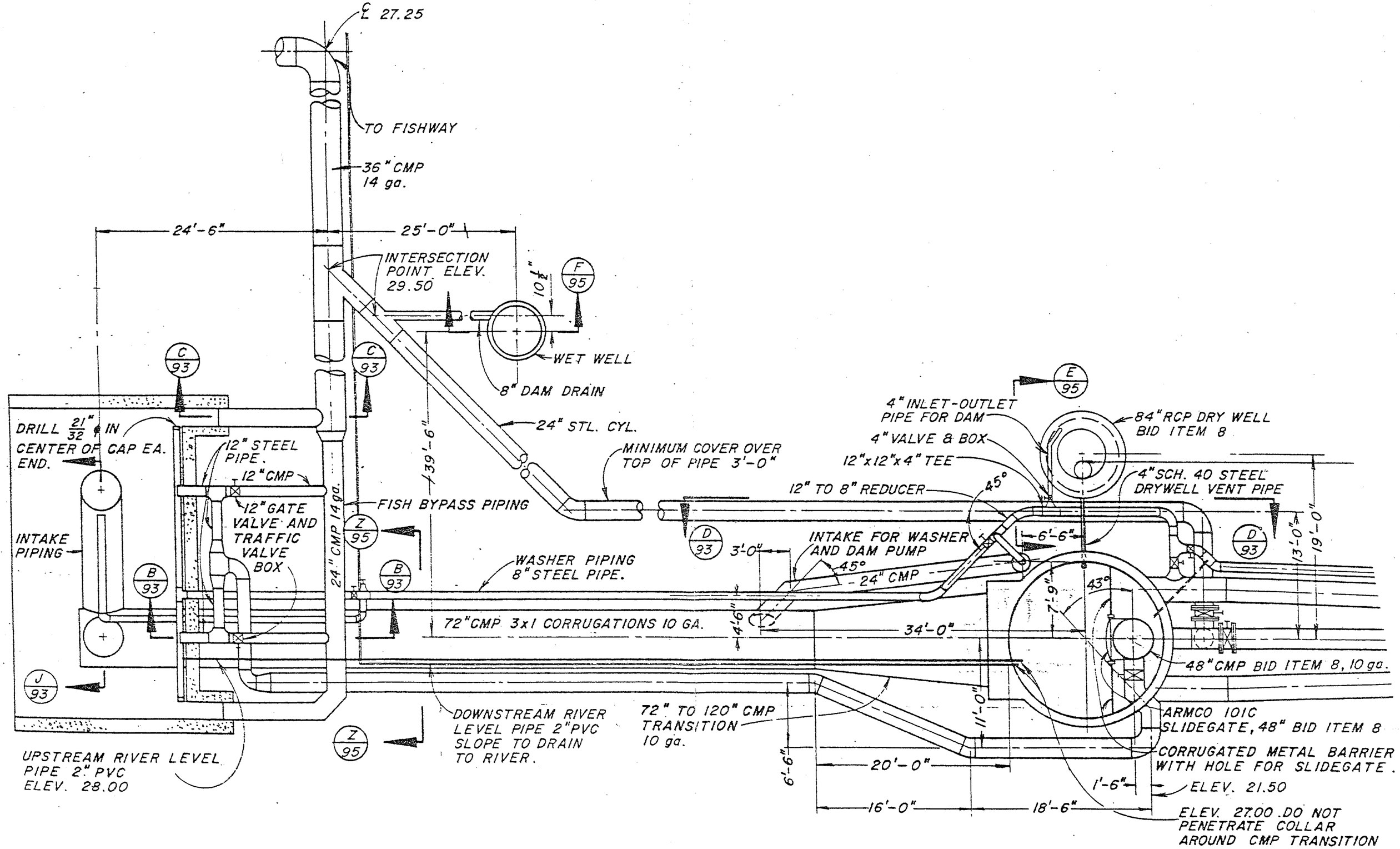
℄ 27.25
TO FISHWAY
36" CMP
14 ga.
24'-6"
25'-0"
INTERSECTION POINT ELEV. 29.50
10½"
F 95
WET WELL
8" DAM DRAIN
C 93
C 93
24" STL. CYL.
39'-6"
MINIMUM COVER OVER TOP OF PIPE 3'-0"
DRILL 21/32" ⌀ IN CENTER OF CAP EA. END.
12" STEEL PIPE.
12" CMP
12" GATE VALVE AND TRAFFIC VALVE BOX
24" CMP 14 ga.
FISH BYPASS PIPING
INTAKE PIPING
Z 95
B 93
B 93
D 93
3'-0"
WASHER PIPING 8" STEEL PIPE.
INTAKE FOR WASHER AND DAM PUMP
45°
24" CMP
4'-6"
72" CMP 3x1 CORRUGATIONS 10 GA.
34'-0"
J 93
Z 95
DOWNSTREAM RIVER LEVEL PIPE 2" PVC SLOPE TO DRAIN TO RIVER.
72" TO 120" CMP TRANSITION 10 ga.
UPSTREAM RIVER LEVEL PIPE 2" PVC ELEV. 28.00
6'-6"
20'-0"
16'-0"
18'-6"
11'-0"
E 95
4" INLET-OUTLET PIPE FOR DAM
4" VALVE & BOX
12"x12"x4" TEE
12" TO 8" REDUCER
45°
84" RCP DRY WELL BID ITEM 8
4" SCH. 40 STEEL DRYWELL VENT PIPE
6'-6"
D 93
13'-0"
19'-0"
7'-9"
43°
48" CMP BID ITEM 8, 10 ga.
ARMCO 101C SLIDEGATE, 48" BID ITEM 8
CORRUGATED METAL BARRIER WITH HOLE FOR SLIDEGATE.
1'-6"
ELEV. 21.50
ELEV. 27.00 DO NOT PENETRATE COLLAR AROUND CMP TRANSITION

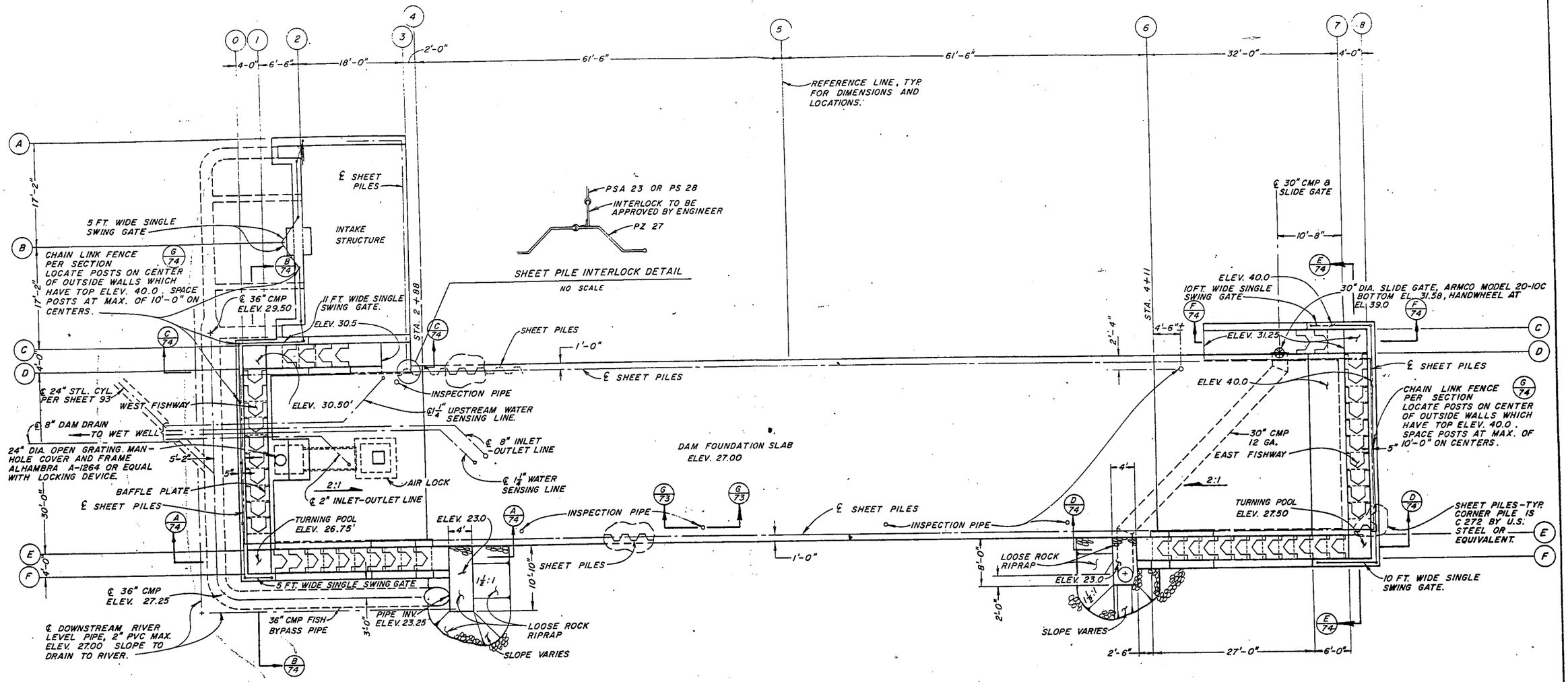

NOTE:
SEE SHEET NO. 93 FOR CONTINUATION OF PIPING.

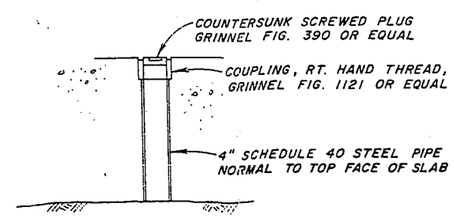

INSPECTION PIPE, 6 REQ'D.

SECTION G/73

NOT TO SCALE

THIS DRAWING REDUCED APPROXIMATELY HALF SIZE

1/8" = 1' 10 0 10 20 SCALE OF FEET

No	DATE	REVISION	By

RUSSIAN RIVER-COTATI INTERTIE PROJECT
WOHLER DAM & DIVERSION
GENERAL PLAN

SCALE: 1/8" = 1'-0"
DATE: SEPT. 20, 1974
APPROVED: CHIEF ENGINEER RE 8271
DRAWN SKMc
CHECKED

SONOMA COUNTY WATER AGENCY

DESIGNED RE 19161
SUBMITTED RE 10196
DRAWING NUMBER 60-5-102.209

NOTE: MATING FLANGES FOR $1\frac{1}{4}$" & 2" FLANGES FURNISHED WITH ATTACHMENT MATERIALS.

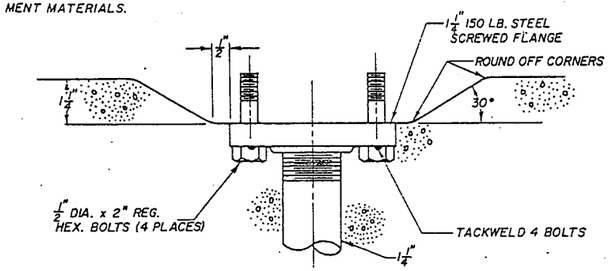

FABRIDAM WATER SENSING FLANGE IN CONCRETE

SCALE: $\frac{1}{2}$ SIZE

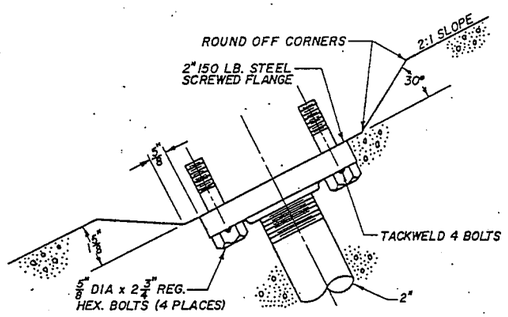

INLET-OUTET FLANGE IN CONCRETE

SCALE: $\frac{3}{8}$" = 1"

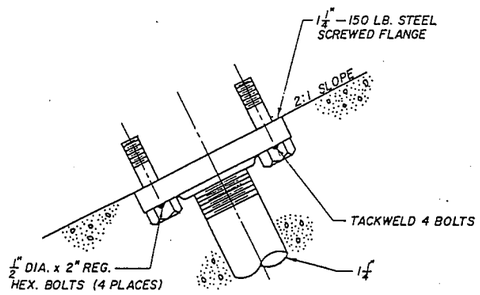

UPSTREAM SENSING FLANGE IN CONCRETE

SCALE: $\frac{1}{2}$ SIZE

NOTE: 8" INLET-OUTLET FIXTURES SHALL BE FURNISHED BY CONTRACTOR AND SHALL BE COATED WITH 2 COATS OF RED LEAD EPOXY AND 2 COATS OF COAL TAR EPOXY. ALL FLANGES SHALL BE FURNISHED BY THE CONTRACTOR.

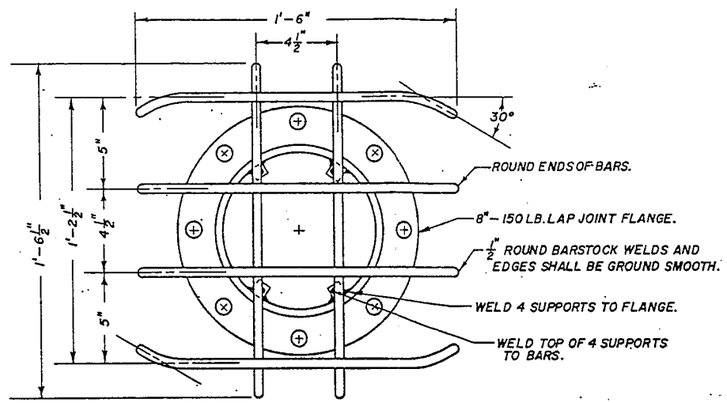

8" INLET-OUTET FIXTURE PLAN AND ELEVATION

SCALE: $\frac{1}{4}$" = 1"

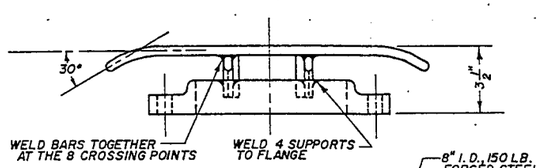

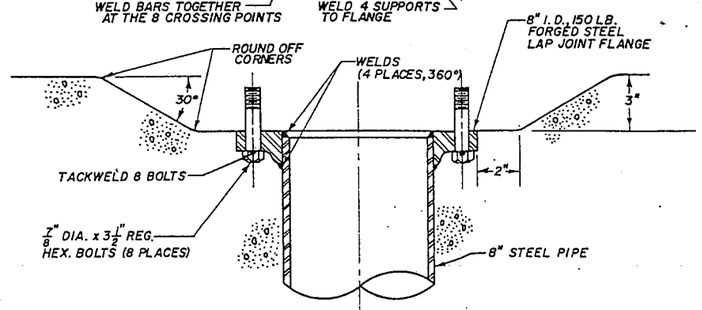

INLET-OUTLET FLANGE IN CONCRETE

SCALE: $\frac{1}{4}$" = 1"

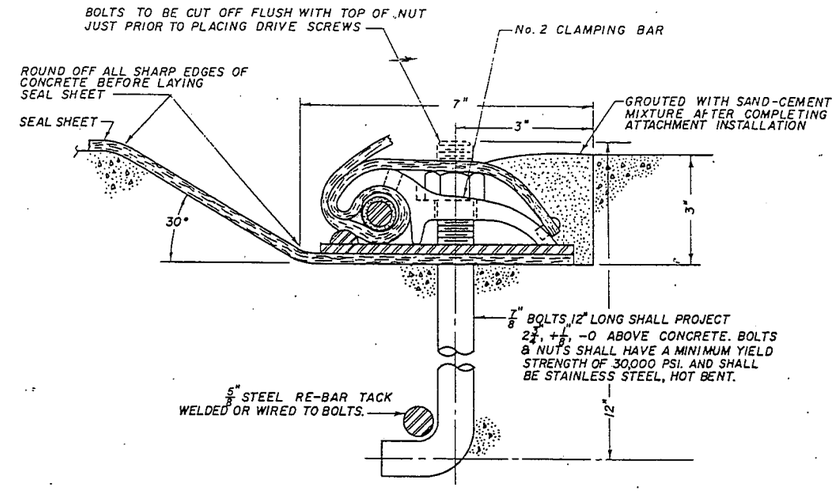

TYPICAL DOWNSTREAM ATTACHMENT AFTER INSTALLATION

PAT. No. 3,355,851 - U.S. & OTHER COUNTRIES

NO SCALE

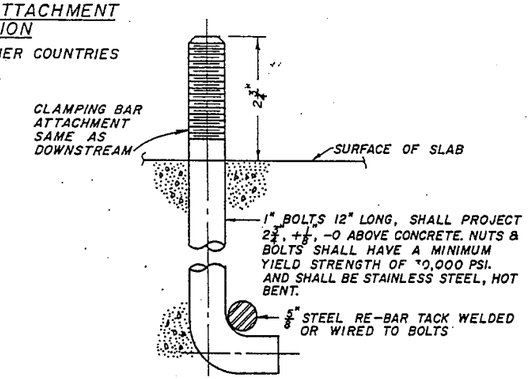

TYPICAL UPSTREAM BOLT

NO SCALE

SECTION D/79

THIS DRAWING REDUCED APPROXIMATELY HALF SIZE

N. M. IMBERTSON & ASSOCIATES
CONSULTING ENGINEERS
2213 W. Burbank Blvd., Burbank, California

Designed By: Date: 12-24-74
Drawn By: P.O.B. Scale:
Traced By: P.O.B.
Approved By: D74-113-3

No.	Date	REVISION	By

RUSSIAN RIVER COTATI INTERTIE PROJECT
WOHLER DAM AND DIVERSION
DAM FLANGE DETAILS

SCALE | APPROVED CHIEF ENGINEER | DRAWN
DATE: | CHECKED
SONOMA COUNTY WATER AGENCY
DESIGNED | SUBMITTED RE 10196 | DRAWING NUMBER 60-5-102.219

NOTES:

1. PIPING PASSING THROUGH CONCRETE WALLS AND FLOORS INTO DRY COMPARTMENTS SHALL BE PROVIDED WITH WEEP RINGS TO REDUCE LEAKAGE OF WATER AROUND PIPE.
2. ALL PIPING CONNECTING DRY VAULT TO WET VAULT EXCEPT THE 2 INCH INLET-OUTLET LINE SHALL PASS THROUGH THE CONCRETE BOTTOM SLAB OF THE DRY VAULT CLEARING THE REINFORCEMENT BY 1 1/2".
3. PLACEMENT OF REINFORCEMENT IN THE DRY VAULT SHALL NOT VARY FROM THAT SHOWN ON SHEET 95.

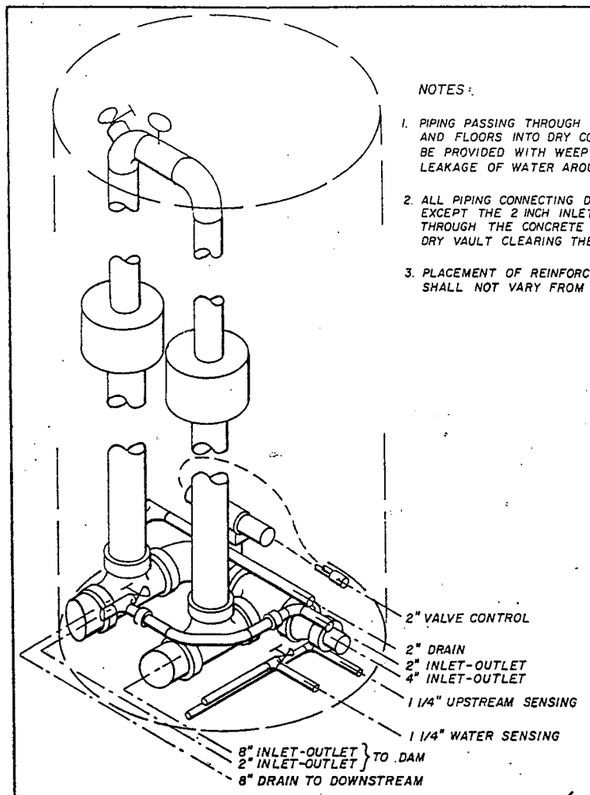

WET VAULT ISOMETRIC
Scale: 3/4" = 1'-0"

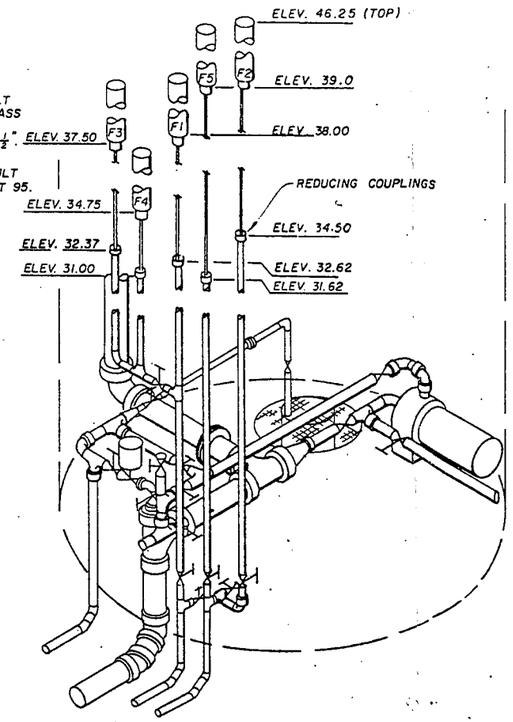

DRY VAULT WATER SYSTEM ISOMETRIC
Scale: 3/4" = 1'-0"

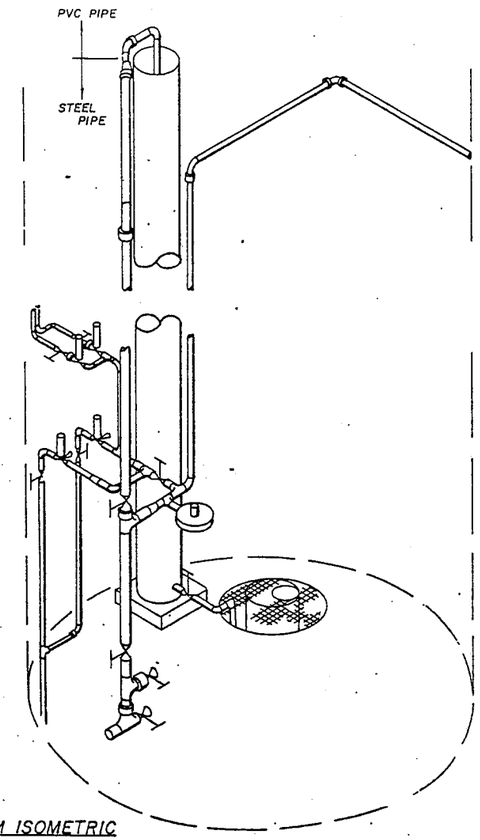

DRY VAULT AIR SYSTEM ISOMETRIC
Scale: 3/4" = 1'-0"

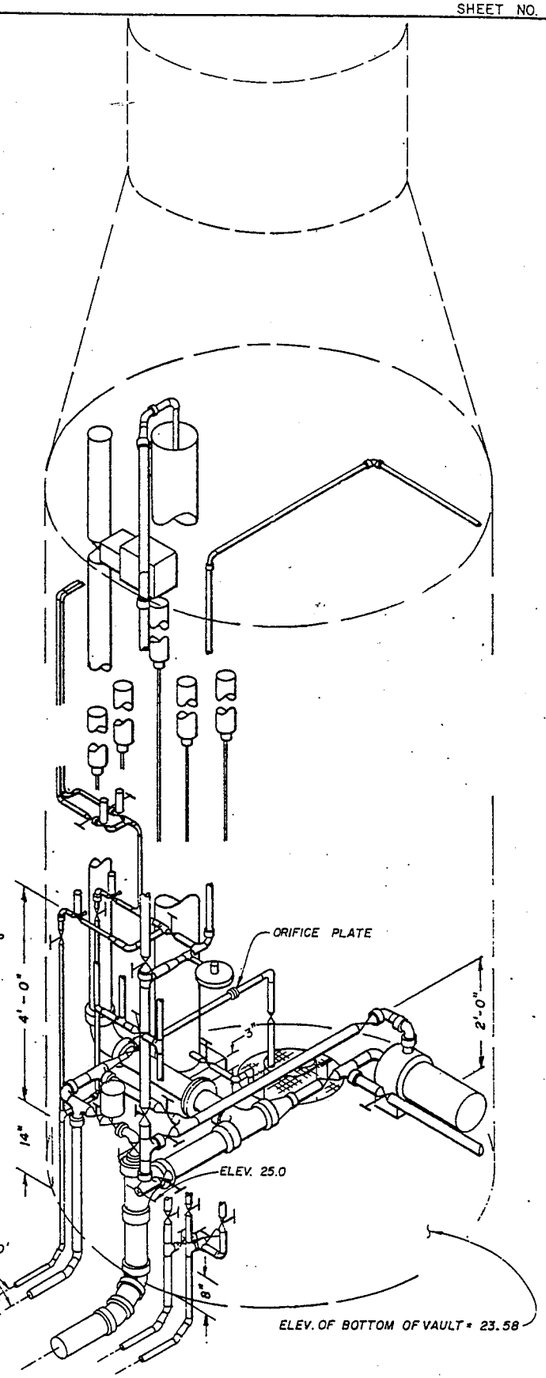

DRY VAULT ISOMETRIC
Scale: 3/4" = 1'-0"

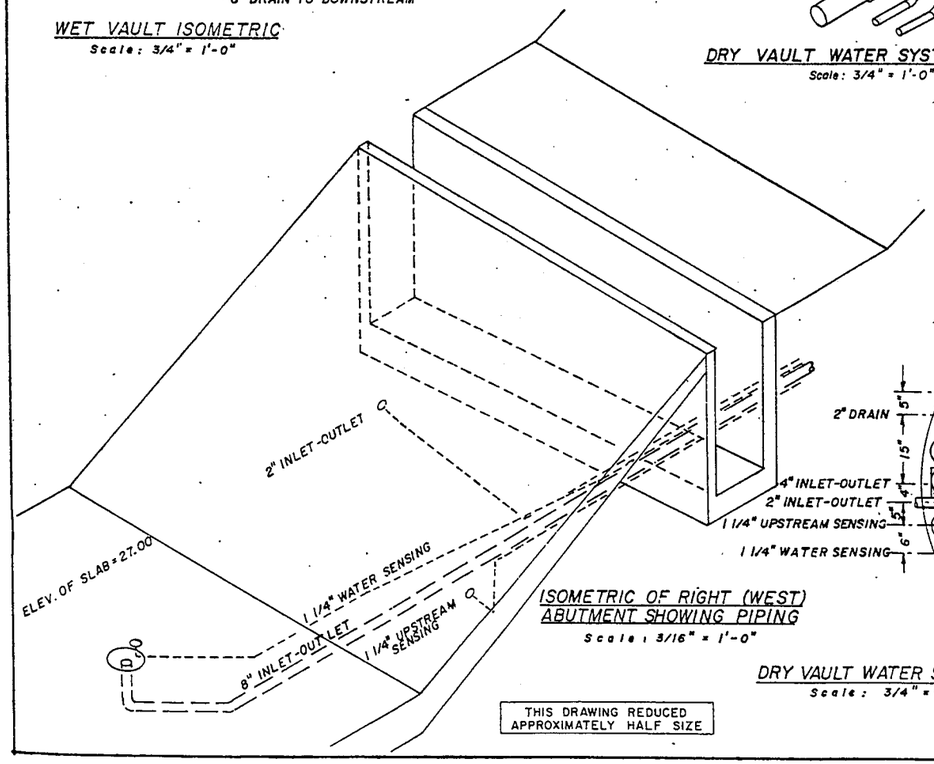

ISOMETRIC OF RIGHT (WEST) ABUTMENT SHOWING PIPING
Scale: 3/16" = 1'-0"

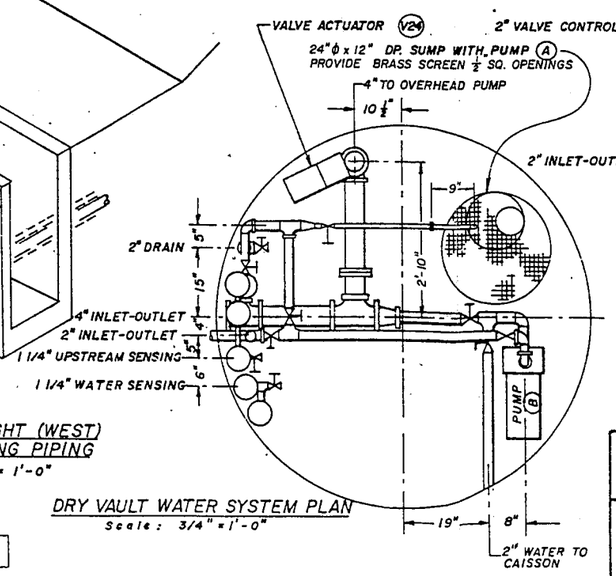

DRY VAULT WATER SYSTEM PLAN
Scale: 3/4" = 1'-0"

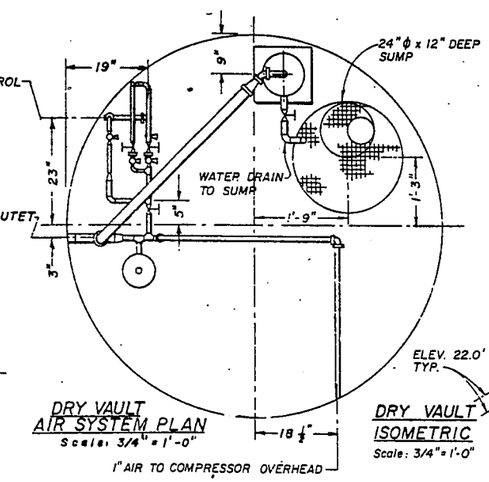

DRY VAULT AIR SYSTEM PLAN
Scale: 3/4" = 1'-0"

THIS DRAWING REDUCED APPROXIMATELY HALF SIZE

N.M. IMBERTSON & ASSOCIATES, INC.
CONSULTING ENGINEERS
2213 W. BURBANK BLVD., BURBANK, CALIFORNIA

Designed By
Drawn By HAB
Traced By HAB
Approved By
Date 1-8-75
Scale

D74-113-6

No.	Date	REVISION	By

RUSSIAN RIVER COTATI INTERTIE PROJECT
WOHLER DAM AND DIVERSION
DAM PIPING DETAILS

SCALE | APPROVED CHIEF ENGINEER | DRAWN
DATE | RE 6271 | CHECKED

SONOMA COUNTY WATER AGENCY

DESIGNED | SUBMITTED RE 10196 | DRAWING NUMBER 60-5-102.222

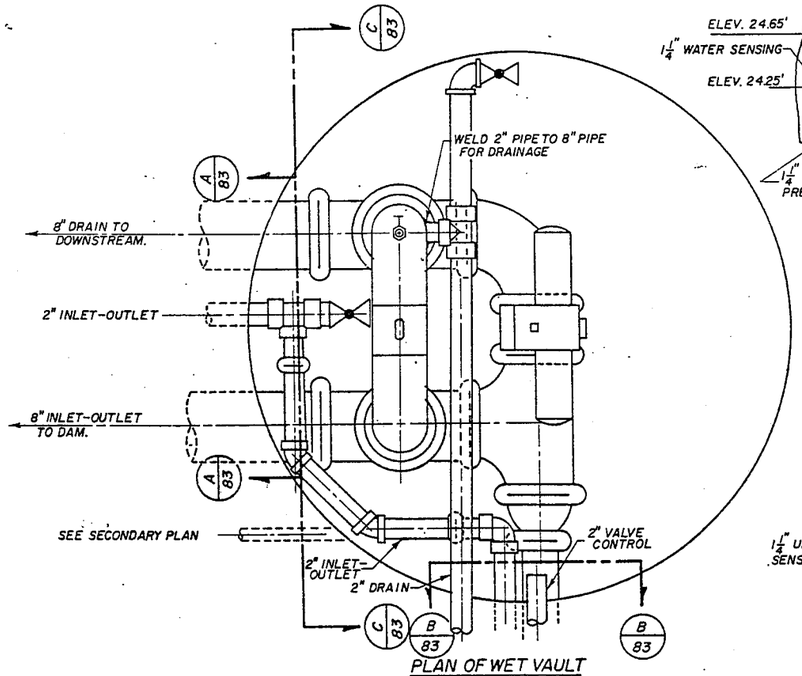

PLAN OF WET VAULT

Scale: $1\frac{1}{2}$" = 1' - 0"

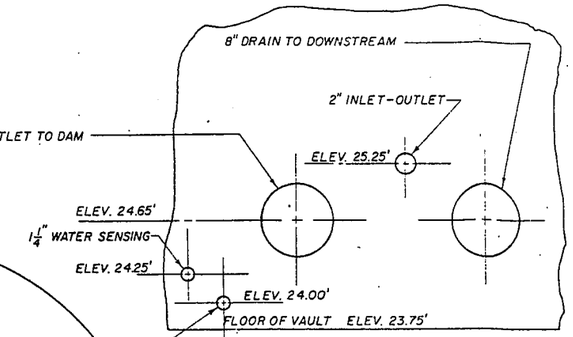

SECTION A/83

Scale: $1\frac{1}{2}$" = 1' - 0"

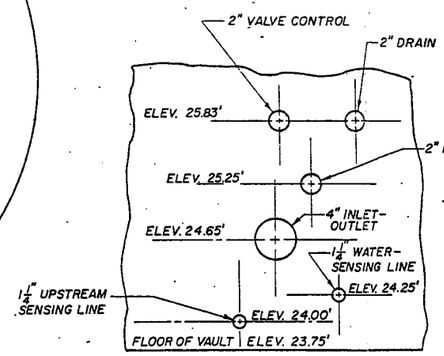

SECTION B/83

Scale: $1\frac{1}{2}$" = 1' - 0"

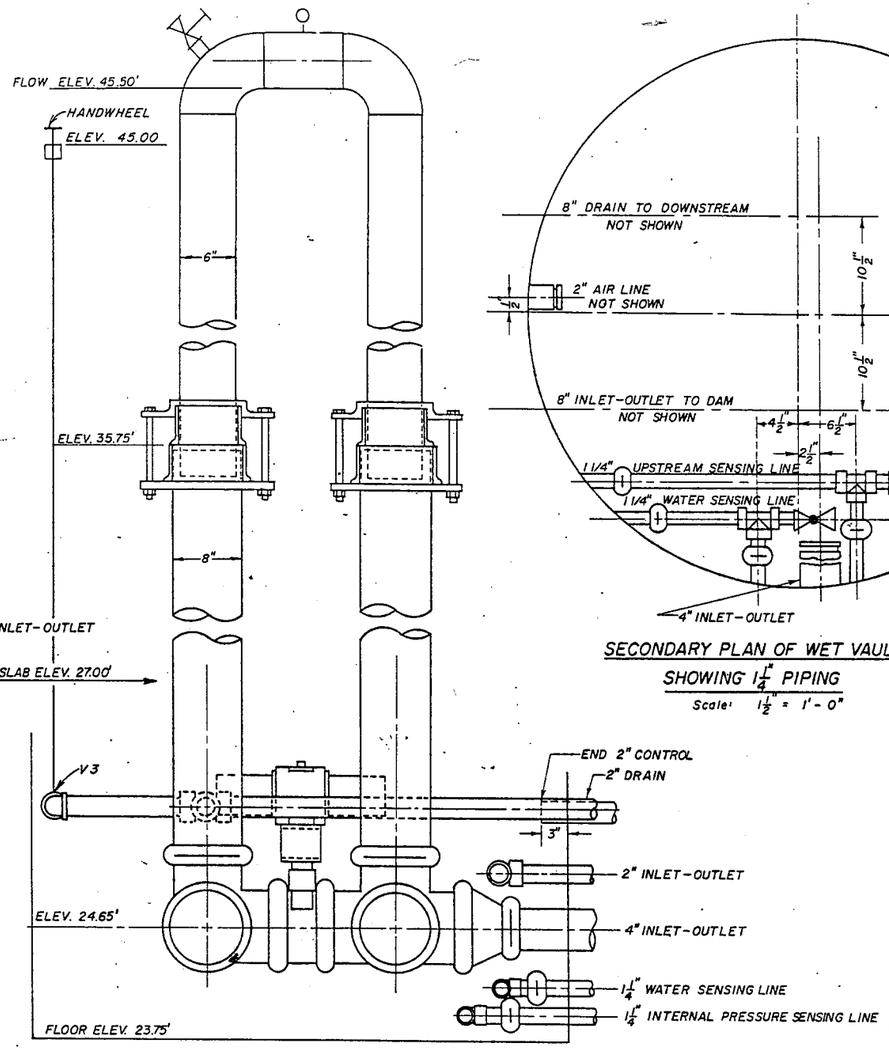

SECTION C/83 & ELEVATION OF SIPHON

Scale: $1\frac{1}{2}$" = 1' - 0"

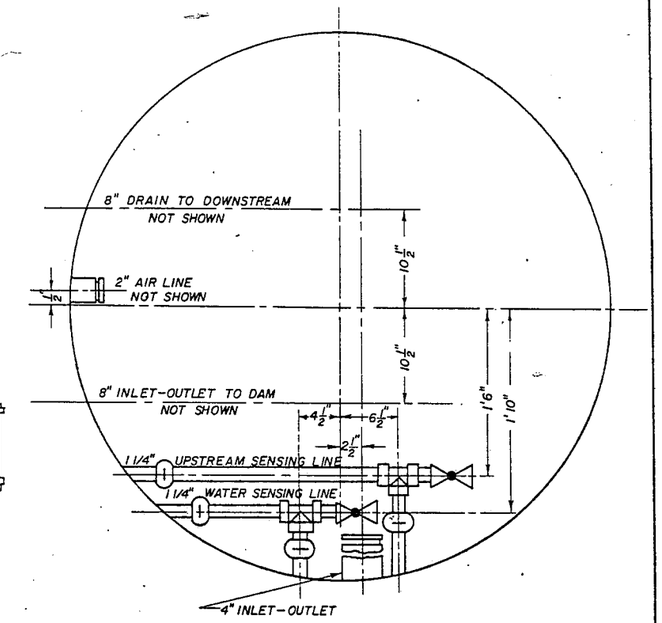

SECONDARY PLAN OF WET VAULT SHOWING $1\frac{1}{4}$" PIPING

Scale: $1\frac{1}{2}$" = 1' - 0"

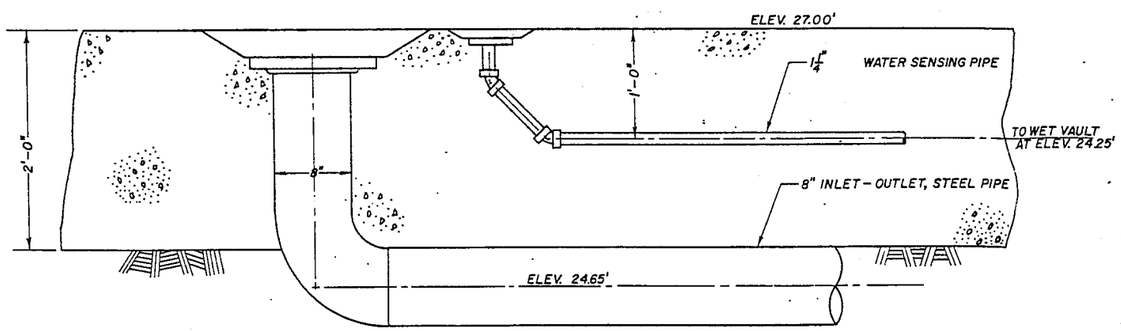

ELEVATION OF PIPING IN SLAB

Scale: $1\frac{1}{2}$" = 1' - 0"

THIS DRAWING REDUCED APPROXIMATELY HALF SIZE

N.M. IMBERTSON & ASSOCIATES, INC.
CONSULTING ENGINEERS
2213 W. BURBANK BLVD., BURBANK, CALIFORNIA

Designed By:
Drawn By: E.R. - P.S.B.
Traced By: P.O.B.
Approved By:
Date: 1-7-75
Scale:
D74-113-5

No	Date	REVISION	By

RUSSIAN RIVER COTATI INTERTIE PROJECT
WOHLER DAM AND DIVERSION
DAM PIPING DETAILS

SCALE: | APPROVED CHIEF ENGINEER RE 8271 | DRAWN
DATE: | CHECKED
DESIGNED | SUBMITTED RE 10196 | DRAWING NUMBER 60-5-102.221

SONOMA COUNTY WATER AGENCY

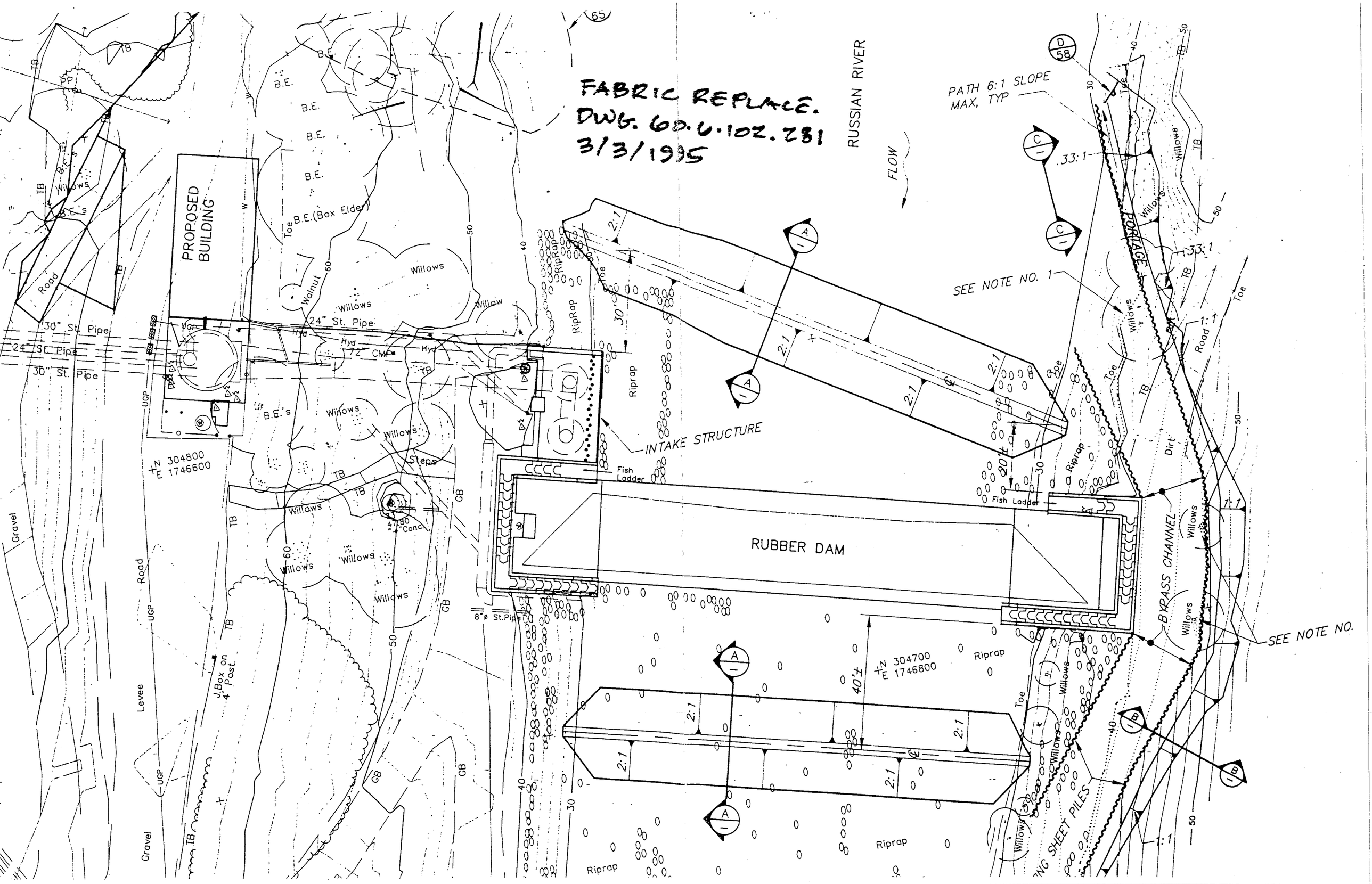
FABRIC REPLACE.
DWG. 60.6.102.281
3/3/1995
RUSSIAN RIVER
FLOW
PATH 6:1 SLOPE
MAX, TYP
PROPOSED
BUILDING
INTAKE STRUCTURE
RUBBER DAM
BYPASS CHANNEL
PORTAGE
SEE NOTE NO. 1
SEE NOTE NO.
Fish Ladder
Riprap
Willows
Walnut
Steps
24" St. Pipe
30" St. Pipe
72" CMP
8"ø St.Pipe
J.Box on 4' Post
N 304800
E 1746600
N 304700
E 1746800
Levee
Road
Gravel
Dirt
Toe
33:1
1:1
2:1
40'±
20'±
30'
B.E.
B.E.(Box Elder)
B.E.'s
Hyd
UGP
TB
GB
PP
65
D
58
A
B
C

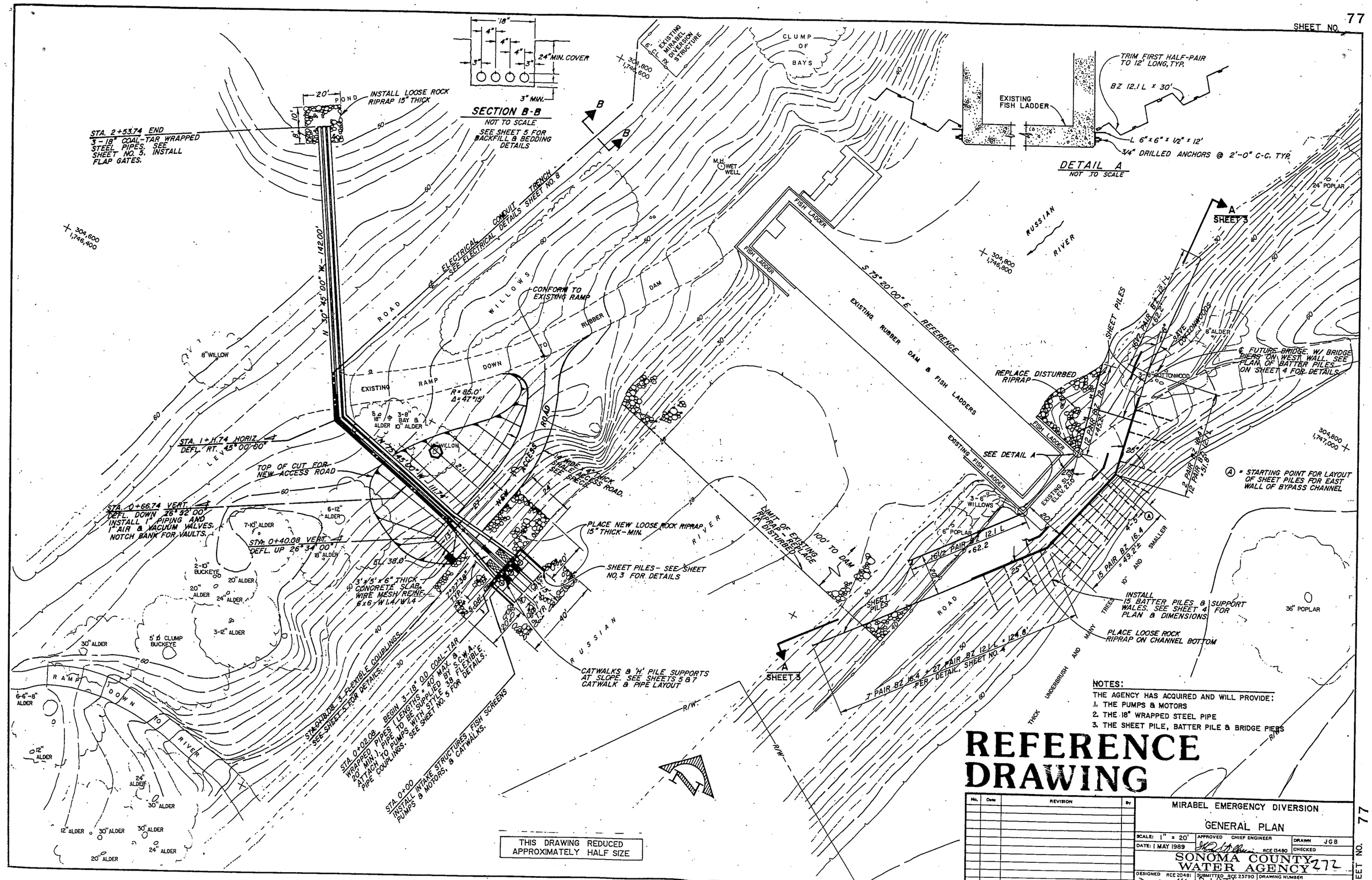

NOTES:

THE AGENCY HAS ACQUIRED AND WILL PROVIDE:

1. THE PUMPS & MOTORS
2. THE 18" WRAPPED STEEL PIPE
3. THE SHEET PILE, BATTER PILE & BRIDGE PIERS

REFERENCE DRAWING

No.	Date	REVISION	By

MIRABEL EMERGENCY DIVERSION

GENERAL PLAN

SCALE: 1" = 20'
DATE: 1 MAY 1989
APPROVED CHIEF ENGINEER RCE 13480
DRAWN JGB
CHECKED
DESIGNED RCE 20481
SUBMITTED RCE 23790
DRAWING NUMBER

SONOMA COUNTY WATER AGENCY

272

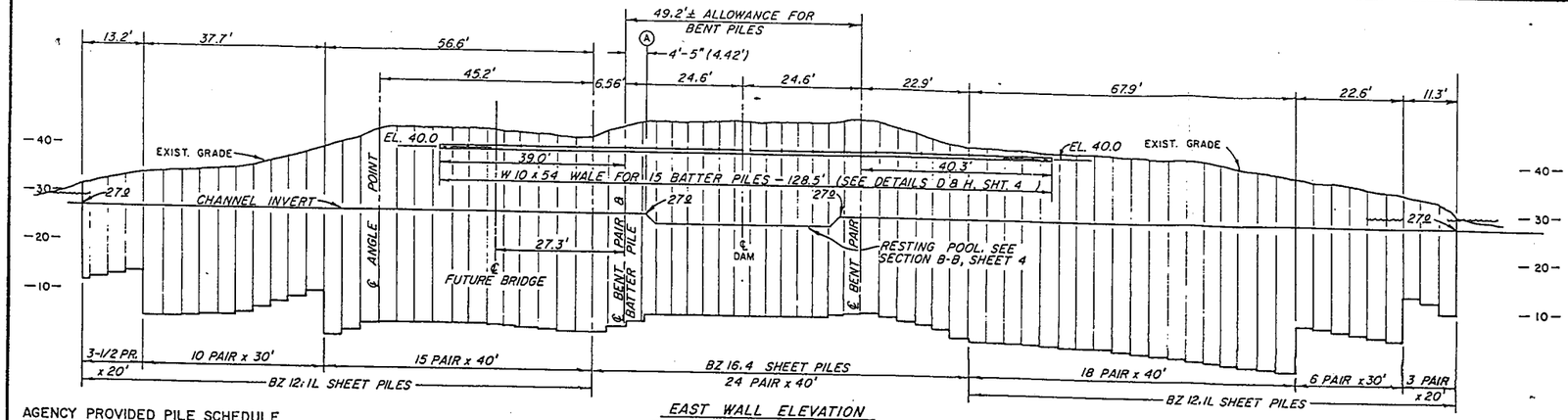

EAST WALL ELEVATION
FROM RIVER SIDE OF CHANNEL
SCALE: 1" = 15'

AGENCY PROVIDED PILE SCHEDULE

PAIRS	MODULE	15'	20'	30'	40'
B Z 16.4	3.28'	0	0	0	24
B Z 12.1 L	3.77'	15	17	34	33

BATTER PILES
15 - H P 12 x 74 x 40'

BRIDGE PIERS
2 - H P 12 x 74 x 40'

Ⓐ = STARTING POINT FOR LAYOUT OF SHEET PILES FOR THE EAST WALL OF BYPASS CHANNEL.

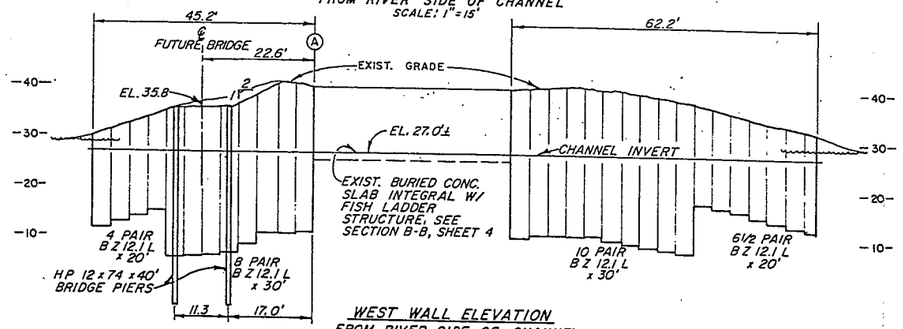

WEST WALL ELEVATION
FROM RIVER SIDE OF CHANNEL
SCALE: 1" = 15'

QUANTITIES (sq. ft.)

LENGTH	40'	30'	20'	15'	TOTALS
EAST WALL CHANNEL	8,125	1,810	490	0	10,425
WEST WALL CHANNEL	0	2,036	792	0	2,828
AROUND INTAKES	0	0	0	848	848
TOTALS	8,125	3,846	1,282	848	14,101
B Z 12.1 L	4,976	3,846	1,282	848	10,952
B Z 16.4	3,149	0	0	0	3,149

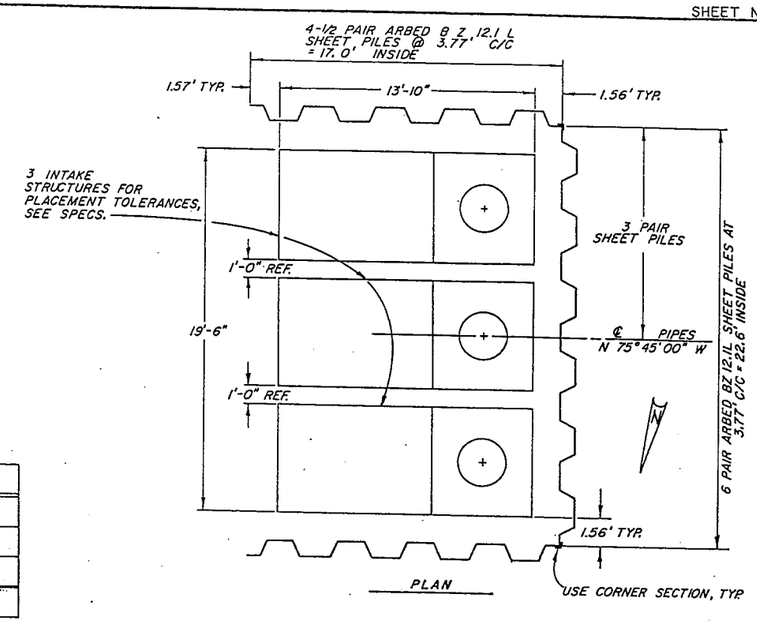

PLAN

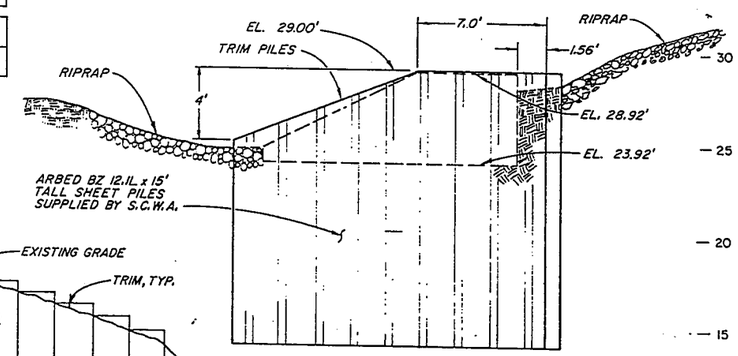

ELEVATION

SHEET PILE DETAILS AROUND INTAKES
(LOOKING DOWNSTREAM)
SCALE 1/4" = 1'-0"

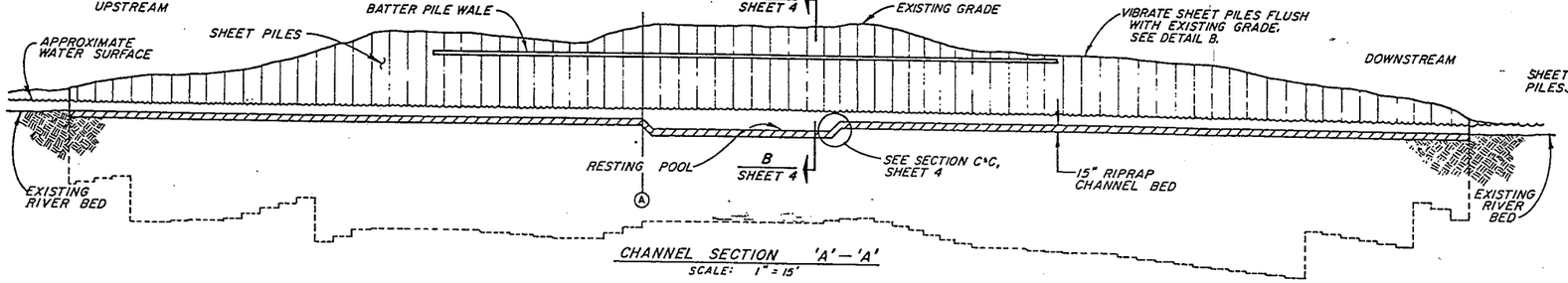

CHANNEL SECTION 'A' — 'A'
SCALE: 1" = 15'

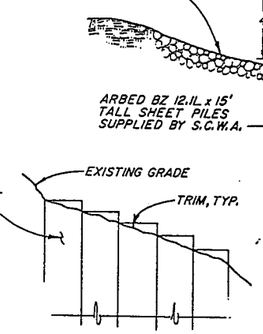

DETAIL B
NOT TO SCALE

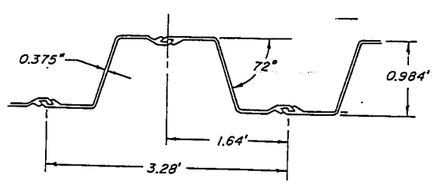

ARBED B Z 16.4 STEEL SHEET PILING
SCALE: 1" = 1'-0"

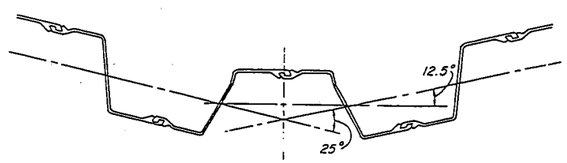

BENT PILE MODIFIED B Z 16.4
SCALE: 1" = 1'-0"

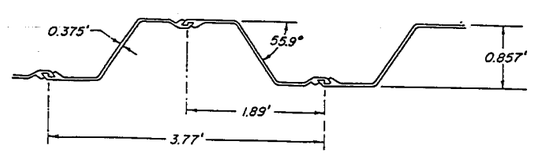

ARBED B Z 12.1 L STEEL SHEET PILING
SCALE: 1" = 1'-0"

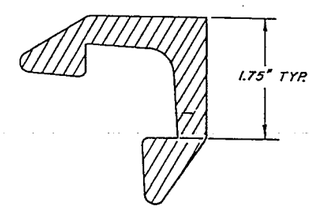

ARBED B Z CORNER SECTION MODEL C C 12
NOT TO SCALE

THIS DRAWING REDUCED APPROXIMATELY HALF SIZE

REFERENCE DRAWING

No.	Date	REVISION	By

MIRABEL EMERGENCY DIVERSION

SHEET PILE DETAILS

SCALE: AS SHOWN | APPROVED CHIEF ENGINEER | DRAWN JGB
DATE: 1 MAY 1989 | RCE 13480 | CHECKED

SONOMA COUNTY WATER AGENCY

DESIGNED RCE 20481 | SUBMITTED RCE 23790 | DRAWING NUMBER 60-5-102.273

PRINTED ON DIEPO NO. 1020 CLEARPRINT

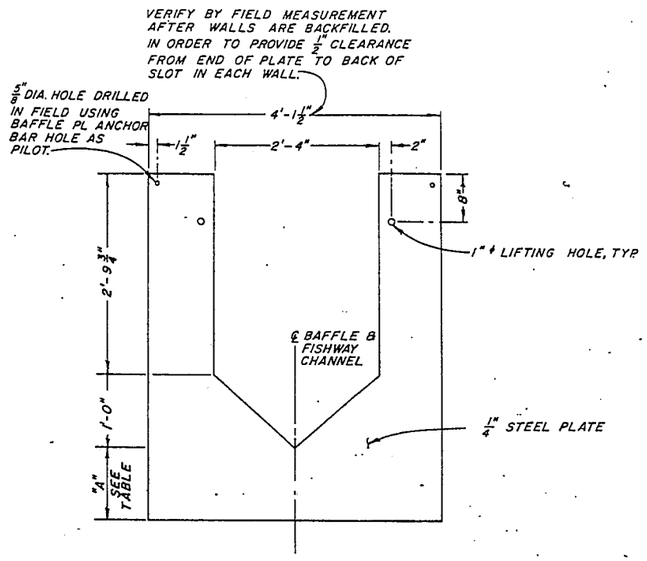

BAFFLE PLATE
SCALE 1" = 1'

EAST FISHWAY	"A"	NO. OF BAFFLES
FROM ELEV. 23.0 TO 27.5	5'-5 3/4"	12
FROM ELEV. 27.5 TO 31.25	4'-10"	10
AT ELEV. 31.25	4'-3 3/4"	1
"	4'-9"	1
WEST FISHWAY		
FROM ELEV. 23.0 TO 26.75	5'-5 3/4"	10
FROM ELEV. 26.75 TO 30.5	4'-11 1/2"	10
AT ELEV. 30.5	4'-5 1/4"	1
"	4'-10"	1
"	5'-2 1/4"	1
"	5'-8 1/4"	1

BAFFLES SHALL BE PLACED IN ORDER OF INCREASING LENGTH FROM THE DOWNSTREAM DIRECTION TO THE UPSTREAM DIRECTION OF THE FISHWAY.

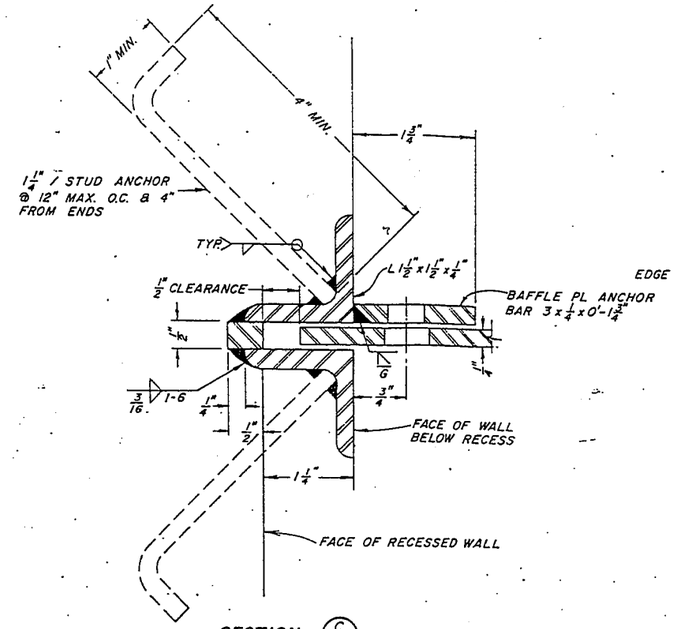

SECTION (C/75)
TYP. ALL BAFFLE PLATES
NO SCALE

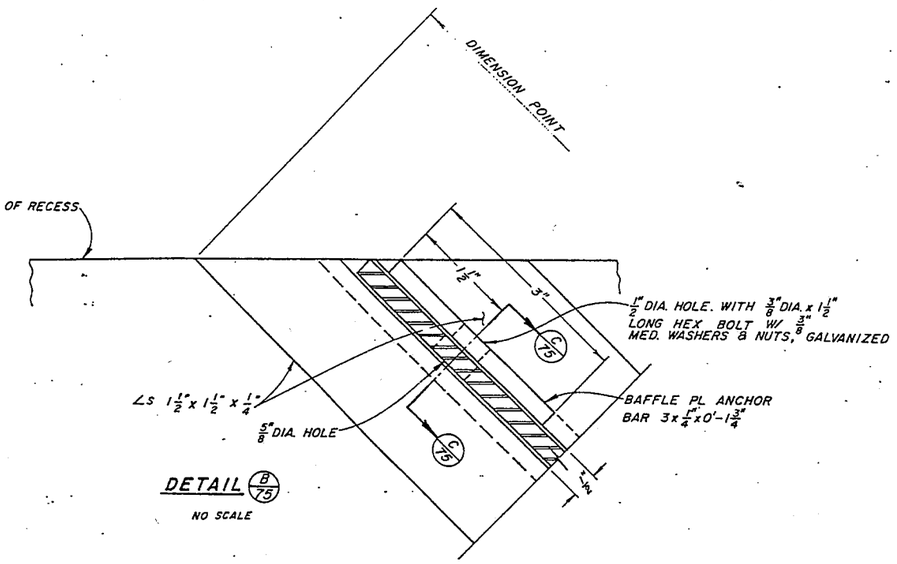

DETAIL (B/75)
NO SCALE

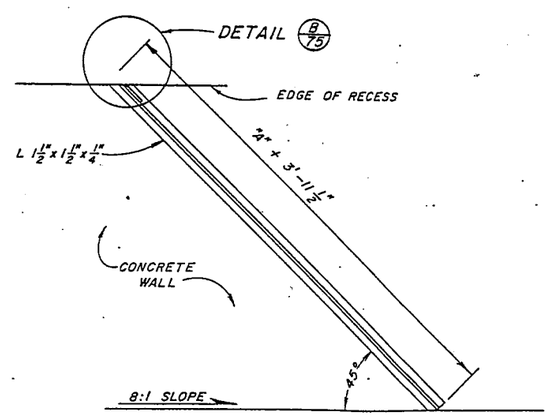

TYPICAL BAFFLE PLATE SLOT
NOT TO SCALE

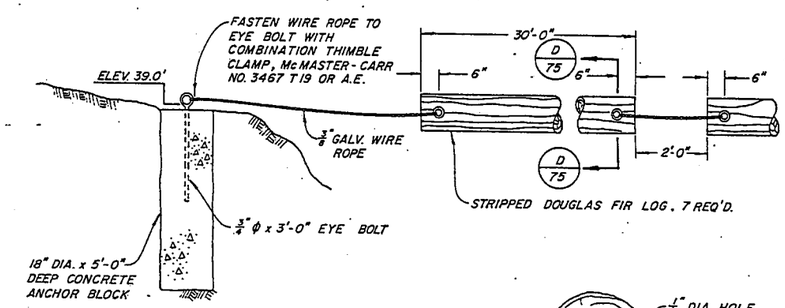

ANCHOR DETAILS
2 REQ'D.

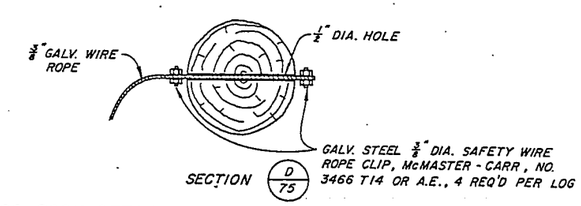

SECTION (D/75)

LOG BOOM DETAILS
NO SCALE

NOTE:
THE STEEL FOR BAFFLE PLATE SLOTS, AND BAFFLE PLATE ANCHORS, SHALL NOT BE GALVANIZED.

THIS DRAWING REDUCED APPROXIMATELY HALF SIZE

1" = 1' 0 1 2 3 SCALE OF FEET
12" = 1' 0 1 2 3 SCALE OF INCHES

REFERENCE DRAWING

No.	DATE	REVISION	By

RUSSIAN RIVER-COTATI INTERTIE PROJECT
WOHLER DAM & DIVERSION
FISHWAY DETAILS

SCALE: AS SHOWN | APPROVED CHIEF ENGINEER | DRAWN SKMc
DATE: SEPT. 30, 1974 | RE 8271 | CHECKED

SONOMA COUNTY WATER AGENCY

DESIGNED RE 19161 | SUBMITTED RE 10196 | DRAWING NUMBER 60-5-102.211

SHEET NO. 72

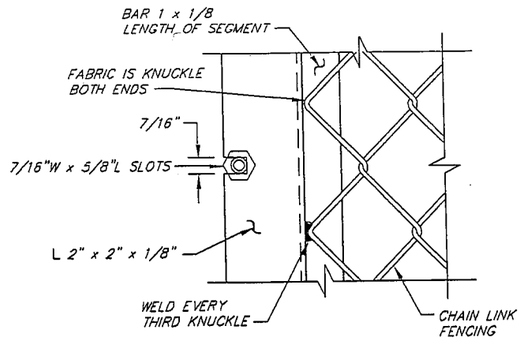

DETAIL (TYP BOTH SIDES) C

HALF SCALE

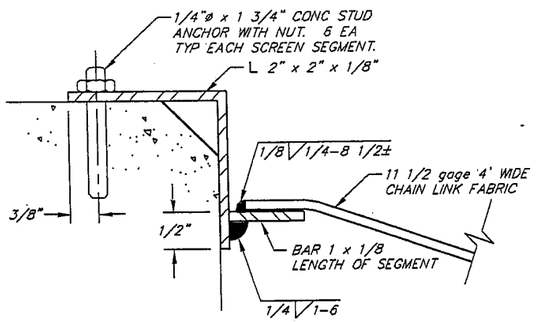

SECTION A

FULL SCALE

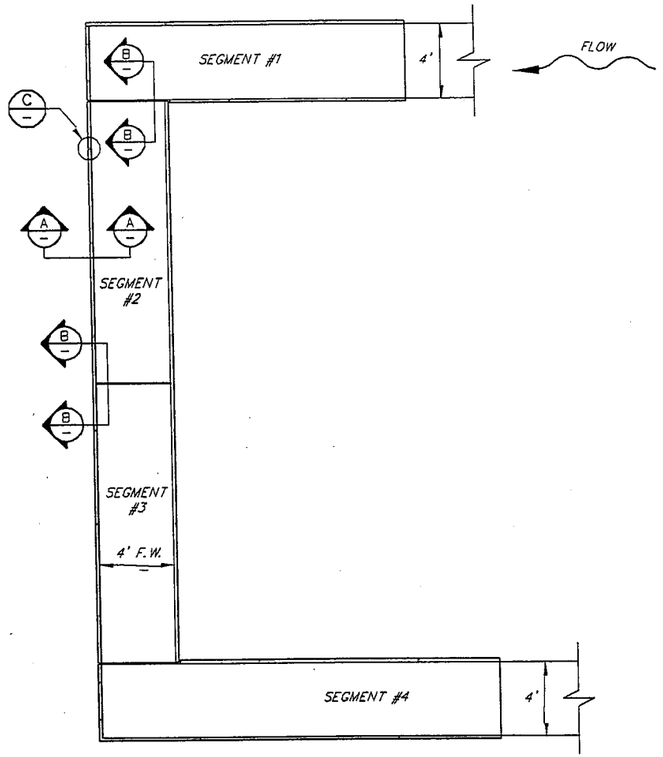

COVER LAYOUT PLAN – WEST FISHWAY
(EAST SIMILAR)
SCALE: 1/4" = 1'-0"

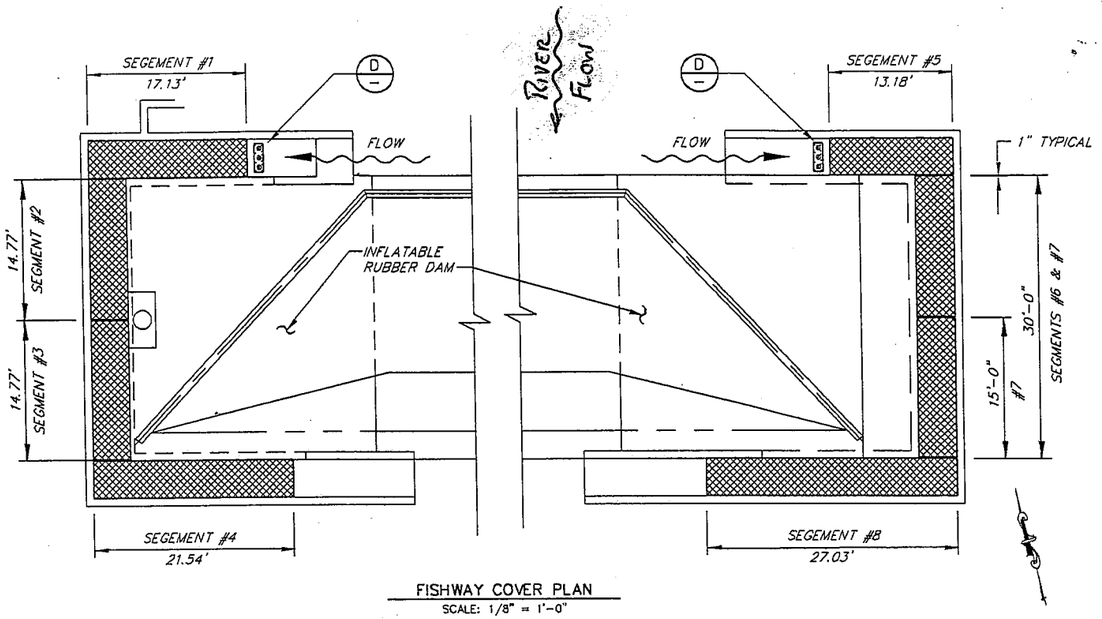

FISHWAY COVER PLAN
SCALE: 1/8" = 1'-0"

FISHWAY COVERS

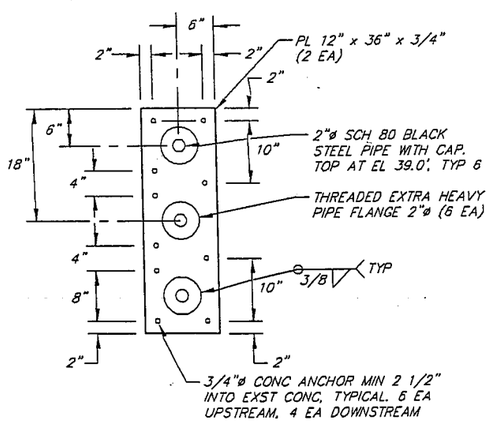

DEBRIS BARRIER D

SCALE: 1" = 1'-0"

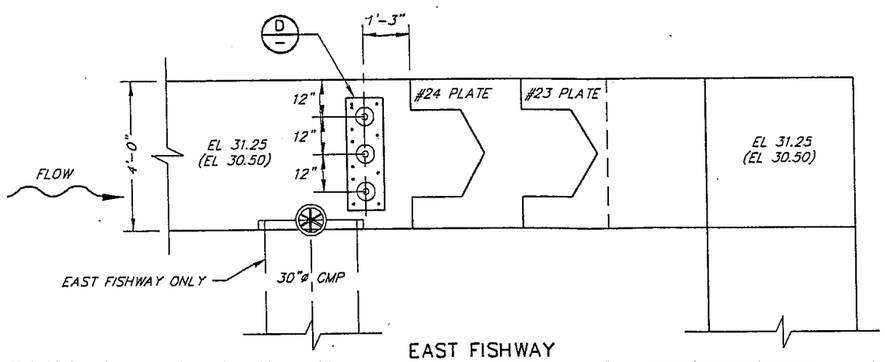

EAST FISHWAY
(WEST FISHWAY SIMILAR)
SCALE: 1/2" = 1'-0"

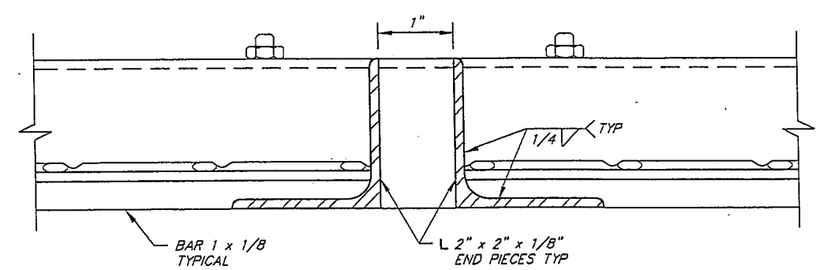

SECTION B

(TYPICAL EACH SEGMENT)
FULL SCALE

THIS DRAWING REDUCED APPROXIMATELY HALF SIZE

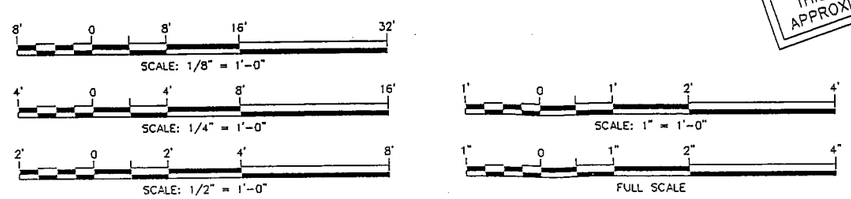

NO.	DATE	REVISION	BY
		PRELIMINARY SUBJECT TO REVISION JAN 27 1995	

MIRABEL INFLATABLE DAM FABRIC REPLACEMENT
WOHLER DAM & DIVERSION
FISHWAY MODIFICATIONS/DETAILS

SCALE : AS SHOWN | APPROVED CHIEF ENGINEER RCE 33447 | DRAWN : FJA
DATE : JAN 27, 1995 | CHECKED :

SONOMA COUNTY
WATER AGENCY

DESIGNED | SUBMITTED RCE 23790 | DRAWING NUMBER 60-5-10~~2.291~~ 90

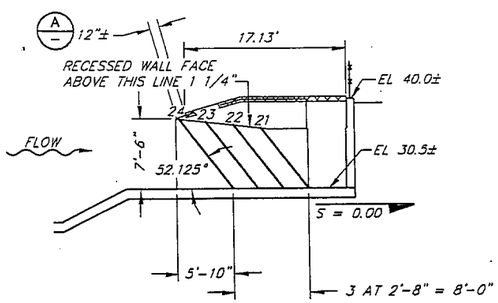

UPSTREAM BAFFLES

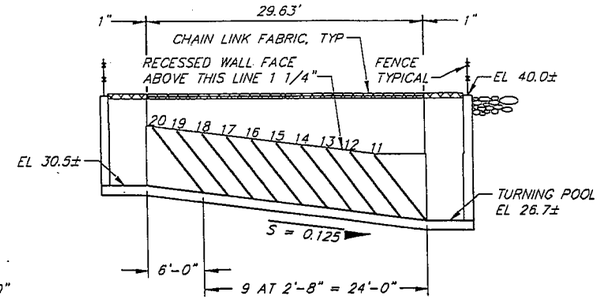

MIDDLE BAFFLES

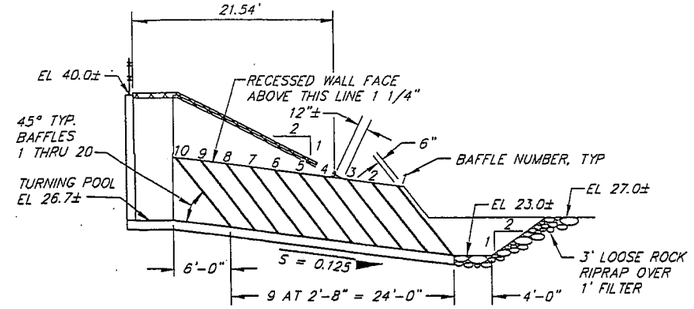

DOWNSTREAM BAFFLES

WEST FISHWAY

SCALE: 1/8"=1'-0"

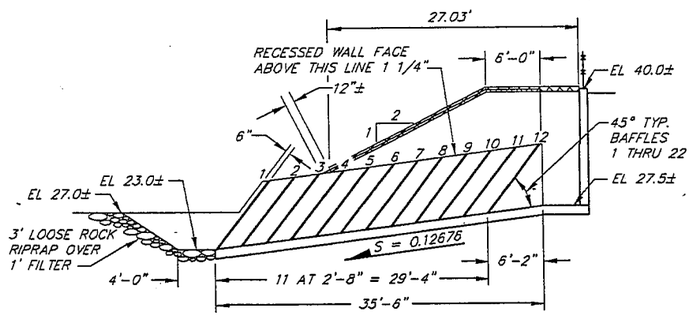

DOWNSTREAM BAFFLES

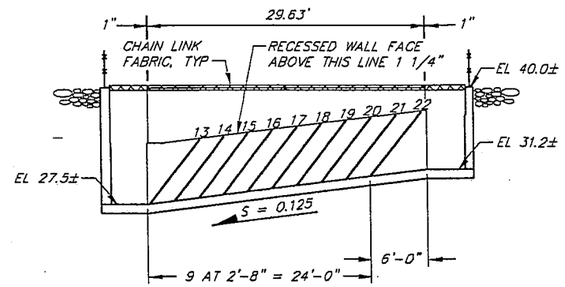

MIDDLE BAFFLES

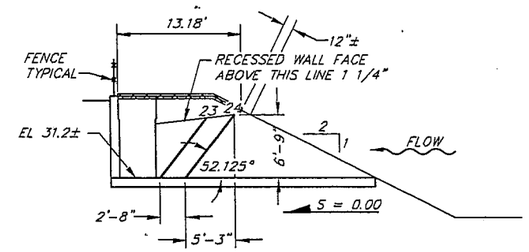

UPSTREAM BAFFLES

EAST FISHWAY

SCALE: 1/8"=1'-0"

WEST FISH LADDER BAFFLE TABLE
WEST SLOPE = 0.125, 0.125, & 0.0

NO.	A	B	C*	"V" EL	FLOOR EL
1	4.00	4.29	9.29	26.16	23.00
2	4.14	4.15	9.29	26.60	23.33
3	4.28	4.01	9.29	27.05	23.67
4	4.42	3.87	9.29	27.49	24.00
5	4.56	3.73	9.29	27.94	24.34
6	4.70	3.59	9.29	28.38	24.67
7	4.85	3.44	9.29	28.83	25.00
8	4.98	3.31	9.29	29.27	25.34
9	5.13	3.16	9.29	29.72	25.67
10	5.27	3.02	9.29	30.16	26.00
11	4.32	3.45	8.77	30.16	26.75
12	4.47	3.30	8.77	30.61	27.08
13	4.60	3.17	8.77	31.05	27.42
14	4.75	3.02	8.77	31.50	27.75
15	4.88	2.89	8.77	31.94	28.09
16	5.03	2.74	8.77	32.39	28.42
17	5.17	2.60	8.77	32.83	28.75
18	5.31	2.46	8.77	33.28	29.09
19	5.45	2.32	8.77	33.72	29.42
20	5.60	2.17	8.77	34.17	29.75
21	4.65	2.60	8.25	34.17	30.50
22	5.21	2.43	8.64	34.61	30.50
23	5.78	2.22	9.00	35.06	30.50
24	6.33	2.17	9.50	35.50	30.50

* ALL DIMENSIONS ARE FROM REFERENCED CONTRACT DRAWINGS & ALL DIMENSIONS MUST BE FIELD VERIFIED

EAST FISH LADDER BAFFLE TABLE
EAST SLOPE = 0.12676, 0.125, & 0.0

NO.	A	B	C*	"V" EL	FLOOR EL
1	4.00	4.29	9.29	26.16	23.00
2	4.12	4.17	9.29	26.60	23.34
3	4.26	4.03	9.29	27.05	23.68
4	4.39	3.90	9.29	27.49	24.02
5	4.54	3.75	9.29	27.94	24.35
6	4.67	3.62	9.29	28.38	24.69
7	4.81	3.48	9.29	28.83	25.03
8	4.86	3.43	9.29	29.21	25.37
9	5.07	3.22	9.29	29.72	25.71
10	5.20	3.09	9.29	30.16	26.05
11	5.35	2.94	9.29	30.61	26.38
12	5.48	2.81	9.29	31.05	26.72
13	4.50	3.14	8.64	31.05	27.50
14	4.65	2.99	8.64	31.50	27.83
15	4.78	2.86	8.64	31.94	28.17
16	4.93	2.71	8.64	32.39	28.50
17	5.05	2.59	8.64	32.83	28.84
18	5.21	2.43	8.64	33.28	29.17
19	5.35	2.29	8.64	33.72	29.50
20	5.49	2.15	8.64	34.17	29.84
21	5.62	2.02	8.64	34.61	30.17
22	5.78	1.86	8.64	35.06	30.50
23	4.83	2.29	8.12	35.06	31.25
24	5.38	2.18	8.56	35.5	31.25

* ALL DIMENSIONS ARE FROM REFERENCED CONTRACT DRAWINGS & ALL DIMENSIONS MUST BE FIELD VERIFIED

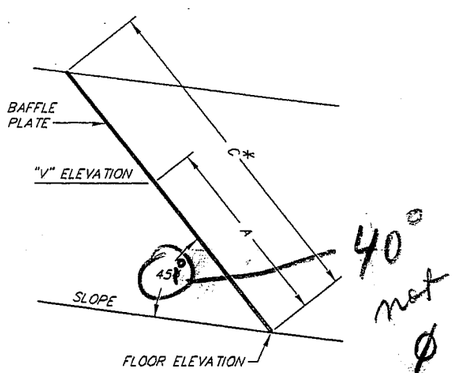

*FROM REFERENCE CONTRACT DRAWING

$A = \frac{\text{"V" ELEVATION} - \text{FLOOR ELEVATION}}{\sin[45° + \arctan \text{OF SLOPE}]}$

$B = C - A - 1$

PLATE DIMENSIONS DETAIL
NOT TO SCALE

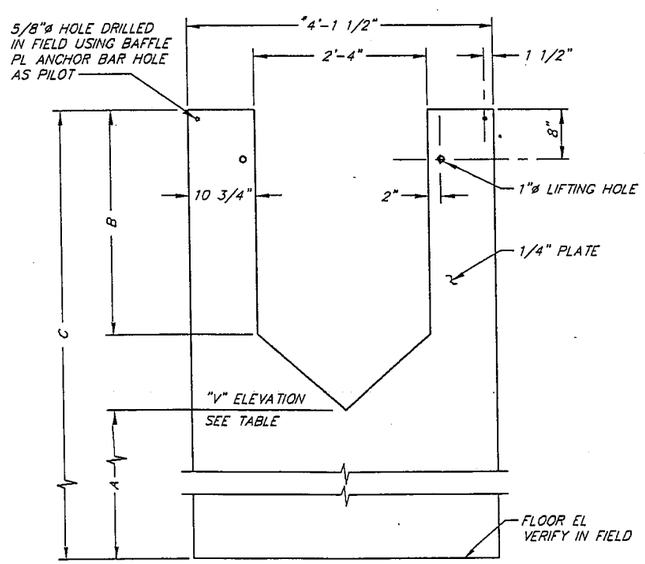

* VERIFY BY FIELD MEASUREMENT IN ORDER TO PROVIDE 1/2" CLEARANCE FROM END OF PLATE TO BACK OF SLOT IN EACH WALL

BAFFLE PLATE
SCALE: 1"=1'-0"

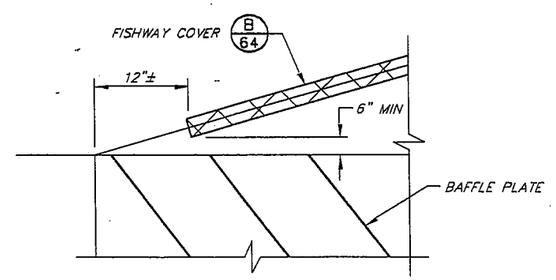

DETAIL
NOT TO SCALE
A

THIS DRAWING REDUCED APPROXIMATELY HALF SIZE

8' 0 8' 16' 32'
SCALE: 1/8" = 1'-0"

1' 0 1' 2' 4'
SCALE: 1" = 1'-0"

NO.	DATE	REVISION	BY
		PRELIMINARY SUBJECT TO REVISION	
		JAN 30 1995	

MIRABEL INFLATABLE DAM FABRIC REPLACEMENT
WOHLER DAM & DIVERSION
FISHWAY MODIFICATIONS/DETAILS

SCALE : AS SHOWN | APPROVED CHIEF ENGINEER RCE 33447 | DRAWN : FJA
DATE : JAN 30, 1995 | CHECKED :

SONOMA COUNTY WATER AGENCY

DESIGNED | SUBMITTED RCE 23790 | DRAWING NUMBER 60-5-102.290

SHEET NO. 63

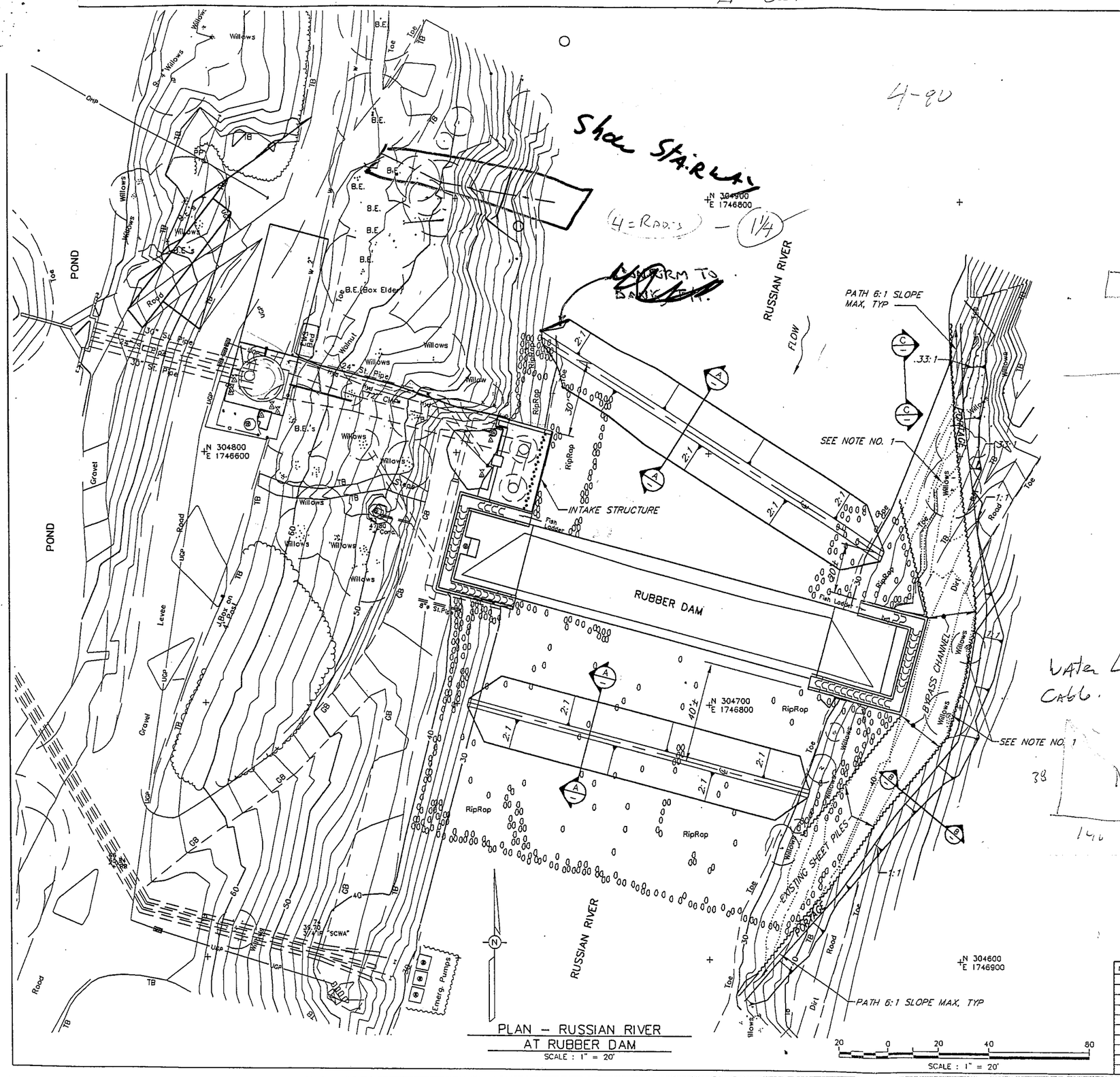

PLAN – RUSSIAN RIVER
AT RUBBER DAM
SCALE : 1" = 20'

Are we going to try to place an impermeable barrier within the river bed? If so, then it be important, then we need details on exactly where and how.

NO - They do not leak

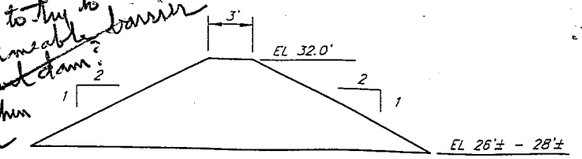

SECTION (A)
NOT TO SCALE

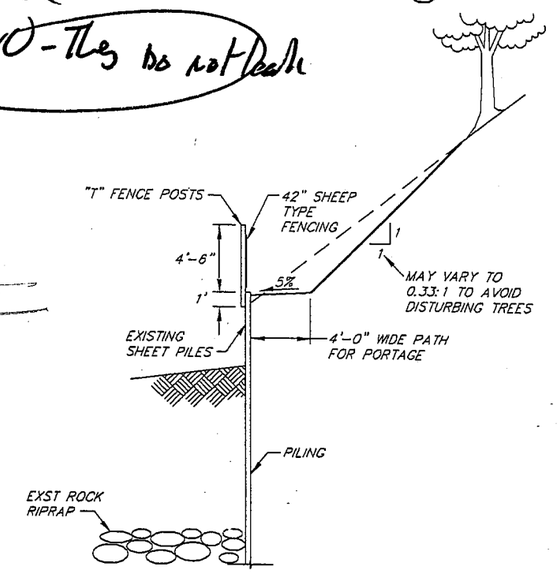

SECTION (B)
NOT TO SCALE

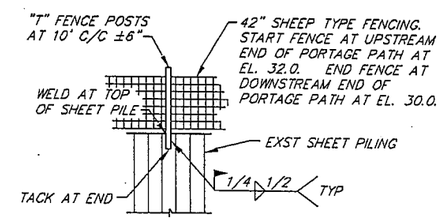

SECTION (C)
NOT TO SCALE

NOTES :

1. REMOVE TREES WITHIN BYPASS CHANNEL

THIS DRAWING REDUCED APPROXIMATELY HALF SIZE

JAN 30 1995

NO.	DATE	REVISION	BY

PRELIMINARY
SUBJECT TO REVISION

P:\NOD\ANV\NOD\ANKL1

MIRABEL INFLATABLE DAM FABRIC REPLACEMENT
MIRABEL COFFER DAMS
PLAN

SCALE : 1" = 20' | APPROVED CHIEF ENGINEER RCE 33447 | DRAWN : ANDY
DATE : JAN 30, 1995 | CHECKED :

SONOMA COUNTY WATER AGENCY

DESIGNED | SUBMITTED RCE 23790 | DRAWING NUMBER 60-6-102.355