DRAWNGS FROM ORIGINAL PIPELINE RECORD DRAWINGS

INDENTED DRAWNS SHOW PIPELINE ADDITIONS AND MODIFICATIONS

PETALUMA AQUEDUCT

- 51-4-102.1 INDEX AND GENERAL NOTES
- 51-4-102.2 PLAN & PROFILE INDEX
  - *4078_C-15R AIR VALVE UPGRADE REPLACEMENT PHASE I, GENERAL LOCATION MAP*
- 51-4-102.3 0+00 TO 12+00
  - *4078_C-16R AIR VALVE UPGRADE REPLACEMENT PHASE I, STA 7+62 SITE PLAN AND DETAILS*
- 51-4-102.3C VERTICAL LINE CHANGE AT THE SANTA ROSA CREEK CROSSING
- 51-4-102.3D PRINCE MEMORIAL GREENWAY CREEK SECTIONS 24" AQUEDUCT @ PIPE ALIGNMENT
- 51-4-102.4 12+00 TO 24+00
- 51-4-102.4A LINE CHANGE BETWEEN 21+57.52 TO 23+49.52
- 51-4-102.5 24+00 TO 36+00
- 51-4-102.6 36+00 TO 66+00
- 51-4-102.7 66+00 TO 96+00
- 51-4-102.8 96+00 TO 126+00
- 51-4-102.9 126+00 TO 156+00
  - *4078_C-17R AIR VALVE UPGRADE REPLACEMENT PHASE I, STA 131+85 SITE PLAN AND DETAILS*
- 51-4-102.10 156+00 TO 196+00
  - *51-4-102.10A SHOWING LOCATION OF TURN-OUTS*
  - *4078_C-18R AIR VALVE UPGRADE REPLACEMENT PHASE I, STA 184+02 SITE PLAN AND DETAILS*
- 51-4-102.11 186+00 TO 216+00
- 51-4-102.12 216+00 TO 246+00
  - *4078_C-19R AIR VALVE UPGRADE REPLACEMENT PHASE I, STA 245+50 SITE PLAN AND DETAILS*
- 51-4-102.13 246+00 TO 276+00
  - *4078_C-20R AIR VALVE UPGRADE REPLACEMENT PHASE I, STA 271+97 SITE PLAN AND DETAILS*
- 51-4-102.14 276+00 TO 306+00
- 51-4-102.15 306+00 TO 336+00
- 51-4-102.16 336+00 TO 366+00
  - *4078_C-21R AIR VALVE UPGRADE REPLACEMENT PHASE I, STA 358+45 SITE PLAN AND DETAILS*
- 51-4-102.17 366+00 TO 396+00
- 51-4-102.18 396+00 TO 426+00
  - *51-2-102.1 FIRE HYDRANT INSTALLATION RALSTON-PURINA FEED MILL NEAR COTATI AVENUE*
  - *51-2-102.4 FIRE HYDRANT RELOCATION STA 404+05*
- 51-4-102.19 426+00 TO 456+00
- 51-4-102.20 456+00 TO 486+00
- 51-4-102.21 486+00 TO 516+00
- 51-4-102.22 516+00 TO 546+00
  - *51-2-102.2 FIRE HYDRANT INSTALLATION MAN STREET AND WOODWARD AVENUE PENNGROVE*
- 51-4-102.23 546+00 TO 576+00
  - *51-4-102.23A 546+00 TO 550+00*
- 51-4-102.24 576+00 TO 606+00
  - *51-4-102.24A SHOWING PUMPING NIPPLE ON SORENSEN DEBERNARDI PROPERTY LINE*
- 51-4-102.25 606+00 TO 636+00
- 51-4-102.26 636+00 TO 666+00
- 51-4-102.27 666+00 TO 696+00
  - *51-4-102.27A LINE CHANGE BETWEEN STA 669+83.43 TO STA 673+35.43*
  - *60-2-102.10 WATER METER INSTALLATIONS CORONA ROAD & NWP RR PAYRAN ST STATION PETALUMA*
- 51-4-102.28 696+00 TO 726+00
  - *4078_C-22R AIR VALVE UPGRADE REPLACEMENT PHASE I, STA 704+93 SITE PLAN AND DETAILS*
- 51-4-102.29 726+00 TO 756+00
- 51-4-102.30 756+00 TO 768+00
- 51-4-102.31 768+00 TO 780+00
  - *51-4-102.53 AQUEDUCT CONNECTIONS PRESSURE REDUCING STATION DETAILS*
- 51-4-102.32 780+00 TO 792+00
- 51-4-102.33 792+00 TO 804+00
- 51-4-102.34 804+00 TO 816+00
  - *60-2-102.11 WATER METER INSTALLATION McNEAR AVE AT PETALUMA BLVD & WASHINGTON ST AT PETALUMA BLVD*

PETALUMA AQUEDUCT (CONT'D)

- 51-4-102.35 816+00 TO 828+00
- 51-4-102.36 828+00 TO 840+00
- 51-4-102.37 840+00 TO 852+00
- 51-4-102.38 852+00 TO 864+00
- 51-4-102.39 864+00 TO 869+90.66 END
  - *51-4-102.39A LINE CHANGE AT END OF PROJECT*
  - *4078_C-23R AIR VALVE UPGRADE REPLACEMENT PHASE I, STA 868+17 SITE PLAN AND DETAILS*
- 51-4-102.40 STA 0+00 TURNOUT DETAILS
  - *51-4-102.40A CORRECT LOCATION OF 20" TURNOUT AT 2ND & WILSON ST.*
  - *DS - 115 Gate Valve Installation, Type A and Type B*
  - *DS - 130 Steel Cylinder Pipe Special Connections*
- 51-4-102.41 SANTA ROSA CREEK CROSSING 5+52.53 TO 7+77.53
- 51-4-102.42 WILFRED AVENUE CROSSING PLAN & PROFILE INDEX
- 51-4-102.43 PIPE DETAILS AT COTATI AVENUE
  - *51-4-102.43.1 TURNOUT METER FOR CITY OF ROHNERT PARK*
- 51-4-102.44 ELY ROAD METERING STATION
- 51-4-102.44.1 ELY ROAD METER VAULT DETAILS
- 51-4-102.45 U.S. 101 FREEWAY CROSSING 728+00 TO 733+00
- 51-4-102.46 PETALUMA RIVER CROSSING 740+61.67 TO 742.16.19
- 51-4-102.47 McNEAR AVE METERING STATION
- 51-4-102.47.1 McNEAR AVE METERVAULT DETAILS
  - *51-4-102.47.3 MCNEAR AVE METER VAULT DETAILS*
- 51-4-102.48 RAILROAD AND HIGHWAY CROSSINGS
- 51-4-102.49 12" LINE TO COTATI
  - *51-4-102.49A ROHNERT PARK METER AND SERVICE CONNECTION STA 14+77*
  - *51-4-102.49B COTATI METER AND SERVICE CONNECTION STA 27+50*
- 51-4-102.50 RELOCATION OF THE DITCH AND CULVERT AT COTATI AVE
- 51-4-102.51 16" PAYRAN STREET LINE
- 51-4-102.52 LOCATION PLANS, PIPE LINES TO EXISTING SYSTEM & STRUCTURAL DETAILS
  - 51-4-104.1 CATHODIC PROTECTION - OVERLAY PT&T MAPS, SECTIONS 8&9, SAN RAFAEL-SANTA ROSA, A CABLE
  - 52-3-102.18 PA TELEMETERING EQUIPMENT PLANS FOR PETALUMA & SONOMA AQUEDUCTS

NO.	DATE	REVISION	BY

SONOMA COUNTY WATER AGENCY

SCALE :
DATE : 10/07/10
DRAWN : SP / JW
REVIEWED :

PETALUMA AQUEDUCT
REVISED INDEX TO DRAWINGS
RECORD DRAWINGS including PIPELINE ADDITIONS

FILE NAME: Petaluma-Aqueduct_HybridDrawingIndex.dwg
CONTRACT NUMBER:
DRAWING NUMBER: G-1_rev
SHEET 1 OF 1

\\sd-data\Proj\water transmission\pipelines\Petaluma\Petaluma-Aqueduct_Hybrid\DrawingIndex.dwg

PLANS OF

PETALUMA AQUEDUCT
WATER TRANSMISSION PIPE LINE

From: THE CITY OF SANTA ROSA

To: THE CITY OF PETALUMA

BY

SONOMA COUNTY FLOOD CONTROL AND WATER CONSERVATION DISTRICT

BOARD OF DIRECTORS

S. CARSON MITCHELL - CHAIRMAN

GUY R. KING — E. J. "NIN" GUIDOTTI

EVERETT LAMPSON — LEIGH SHOEMAKER

GORDON W. MILLER - CHIEF ENGINEER

GENERAL NOTES

1. ELEVATIONS SHOWN ARE IN FEET ABOVE USGS M.S.L. DATUM
2. STATIONS SHOWN ON PLAN AND PROFILE ARE HORIZONTAL DISTANCES UNLESS OTHERWISE SHOWN.
3. ALL STATIONS, GRADES, AND ELEVATIONS ARE SUBJECT TO REVISION TO SUIT FIELD CONDITIONS.
4. LAYING DIRECTION OF PIPE SHALL BE UPHILL WHERE INVERT GRADES EXCEED 25 %.
5. TREES MEASURED LESS THAN 8" IN DIAMETER, 3' FROM THE GROUND, OTHER THAN ORCHARD TREES, ARE NOT SHOWN ON THE DRAWINGS.
6. ALL FENCES ARE TO BE RECONSTRUCTED IN KIND OF NEW MATERIAL. SUBSTITUTIONS SHALL NOT BE MADE WITHOUT PRIOR APPROVAL OF PROPERTY OWNER AND THE ENGINEER.
7. EXISTING PUBLIC UTILITIES SHALL BE MAINTAINED IN PLACE BY THE CONTRACTOR UNLESS OTHERWISE NOTED.
   UTILITY OWNERSHIP AS FOLLOWS UNLESS OTHERWISE NOTED.
   GAS & ELECTRICITY — PACIFIC GAS & ELECTRIC CO.
   WATER & SEWER — CITY OF SANTA ROSA
   COTATI MUTUAL WATER CO.
   PENNGROVE WATER CO.
   CITY OF PETALUMA
   TELEPHONE — PACIFIC TELEPHONE CO.
8. SANITARY SEWER ENCASEMENT AND HOUSE CONNECTION RECONSTRUCTION WHEN REQUIRED SHALL BE ACCORDING TO DETAILS ON DRAWINGS.
9. WHERE ALTERNATE TYPES OF BEDDING B OR C ARE SHOWN ON THE PROFILE, TYPE B SHALL BE USED FOR COAL-TAR COATED PIPE AND TYPE B OR C AT CONTRACTOR'S OPTION ON CEMENT COATED PIPE.

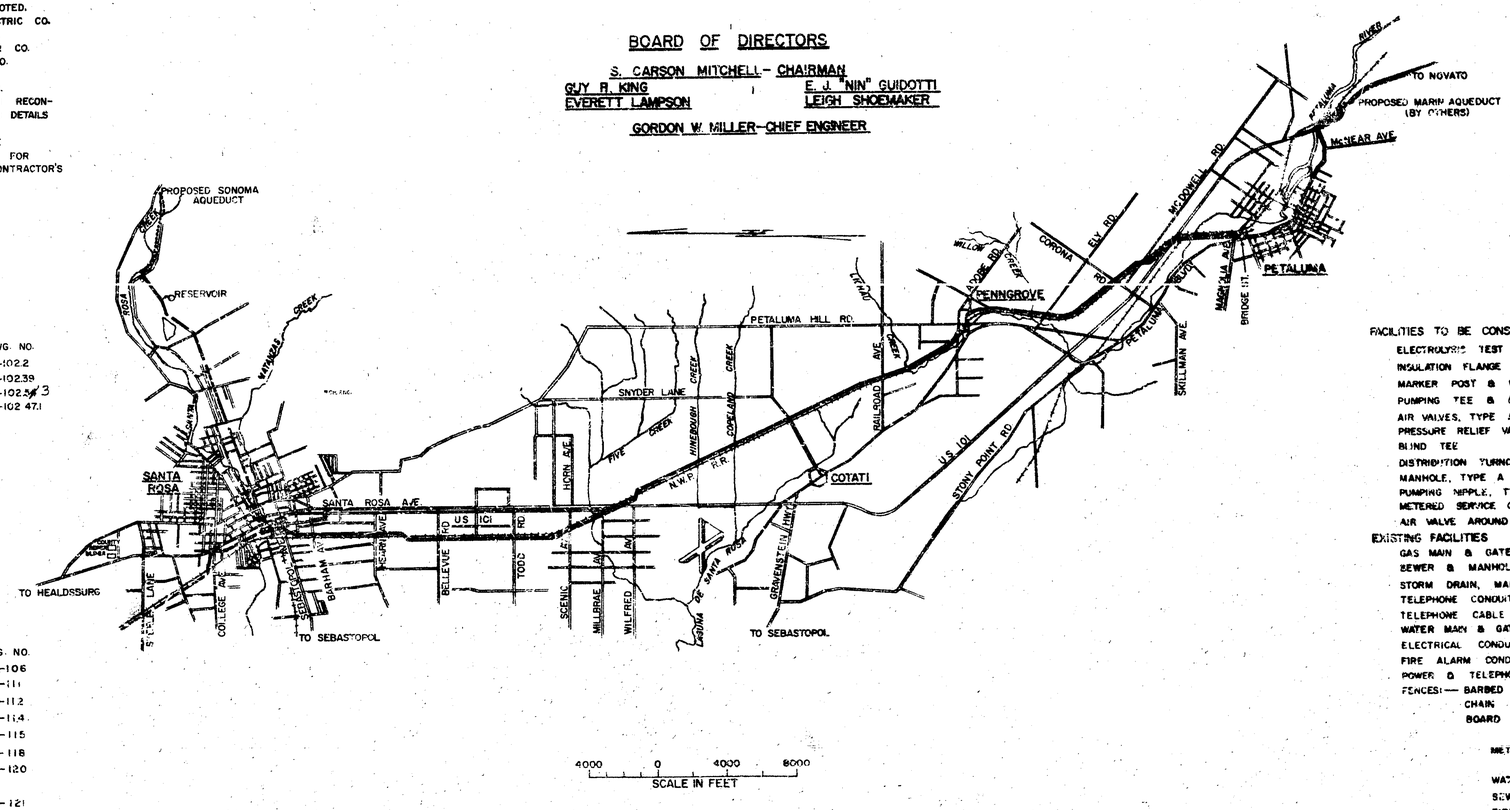

INDEX TO PLANS

	DWG. NO.
INDEX TO PLAN AND PROFILE	51-4-102.2
PLAN AND PROFILE DRAWINGS	51-4-102.3 TO 51-4-102.39
SPECIAL LOCATION DRAWINGS	51-4-102.40 TO 51-4-102.43
	51-4-102.44.1 & 51-4-102.47.1

DESIGN STANDARD DRAWINGS

	DWG. NO.
AIR VALVE INSTALLATION, TYPES A, B, and C	DS-106
TYPICAL METER BOX	DS-111
MANHOLES and PUMPING NIPPLE	DS-112
PIPE BEDDING, BACKFILL, & TOUCH SURFACING	DS-114
GATE VALVE INSTALLATION, TYPES A and B	DS-115
DISTRIBUTION TURNOUT, TYPES A and B	DS-118
RECONSTRUCTION OF SANITARY SEWERS and HOUSE CONNECTIONS	DS-120
PIPE SUPPORTS ACROSS TRENCHES	DS-121
WARNING SIGN	DS-122
TYPICAL FENCE and GATE DETAILS	DS-123
MODIFIED PRESTRESSED CONCRETE CYLINDER PIPE	DS-127
WELDED STEEL PIPE MORTAR LINED AND MORTAR OR COALTAR COATED	DS-128
PIPE JOINT DESIGN	DS-129
SPECIAL PIPE CONNECTIONS	DS-130
PIPE ANCHORAGE AT BENDS - STREAMBED ENCASEMENTS	DS-131
AIR VALVE AROUND MAIN LINE GATE VALVE, TYPES A and B	DS-133
ELECTROLYSIS TEST STATION	DS-134

FACILITIES TO BE CONSTRUCTED

ELECTROLYSIS TEST STATION
INSULATION FLANGE
MARKER POST & WARNING SIGN
PUMPING TEE & BLOWOFF VALVE, TYPE A OR B
AIR VALVES, TYPE A, B, OR C
PRESSURE RELIEF VALVE
BLIND TEE
DISTRIBUTION TURNOUT, TYPE A OR B
MANHOLE, TYPE A OR B
PUMPING NIPPLE, TYPE A OR B
METERED SERVICE CONNECTION
AIR VALVE AROUND MAIN LINE GATE VALVE, TYPE A OR B

EXISTING FACILITIES

GAS MAIN & GATE VALVE
SEWER & MANHOLE
STORM DRAIN, MANHOLE & CATCH BASIN
TELEPHONE CONDUIT & MANHOLE
TELEPHONE CABLE SIGN (TCS)
WATER MAIN & GATE VALVE
ELECTRICAL CONDUIT
FIRE ALARM CONDUIT
POWER & TELEPHONE POLE & GUY
FENCES: BARBED WIRE
CHAIN LINK
BOARD

METER: WATER
GAS
WATER MAIN BLOWOFF
SEWER CLEANOUT
FIRE HYDRANT
MONUMENT
TREE
DITCH, CREEK OR INTERMITTENT STREAM
RIGHT OF WAY & ADJOINING EASEMENT

Return to Revised Index

No.	DATE	REVISION	By
1	12/60	NOTE NO. 9 ADDED	

AS BUILT 4/63 KJT

PETALUMA AQUEDUCT

INDEX AND GENERAL NOTES

SCALE: AS SHOWN | APPROVED | DRAWN KJN | DATE | CHECKED

SONOMA COUNTY FLOOD CONTROL AND WATER CONSERVATION DISTRICT

DRAWING NUMBER 51-4-102.1

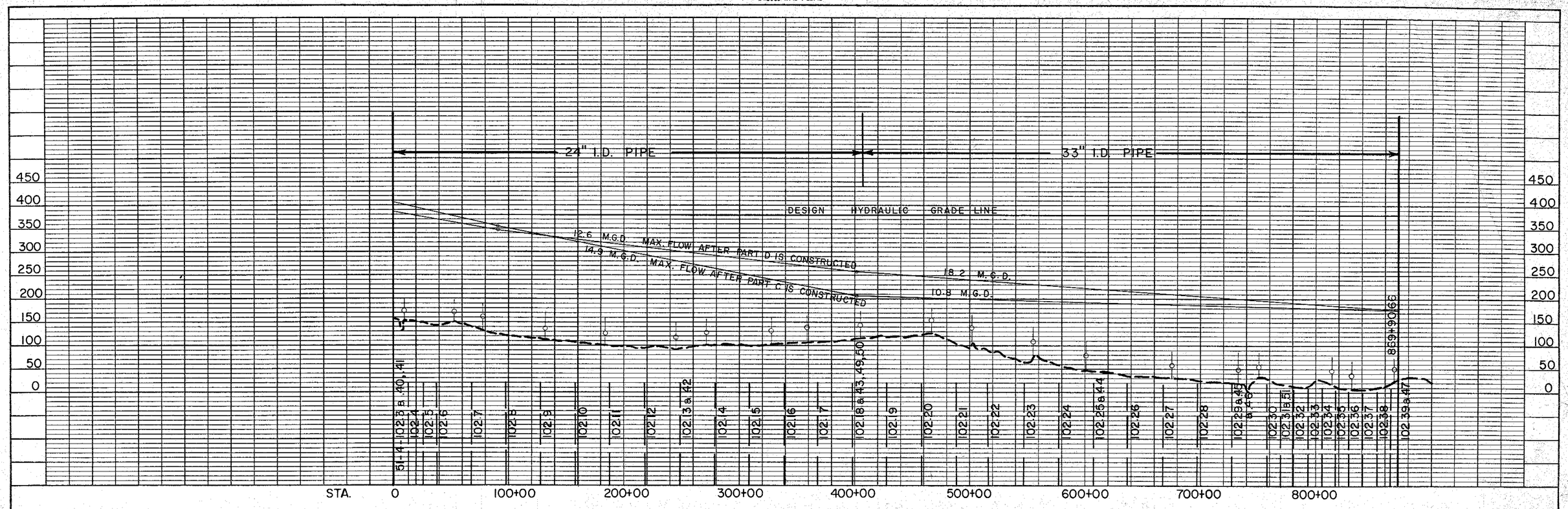

INDICATES AN INSTALLATION OR MANHOLE WHICH WILL AFFORD AN 18" DIA. OPENING AS PERMANENT ACCESS TO THE PIPE.

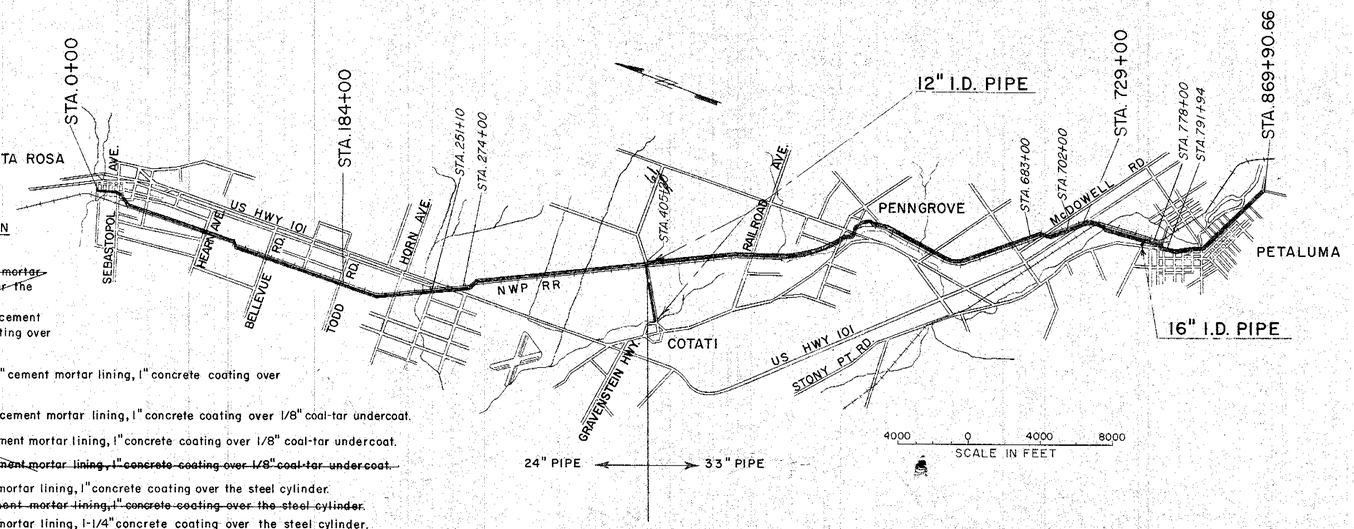

BID SCHEDULE	BID ITEM	PIPE DIA.(I.D.)	STATION	ALTERNATE PIPE DESCRIPTION
~~A~~	~~1~~	~~24"~~	~~0+00-184+00~~	~~Either:~~ M.P. pipe, 1/2" cement mortar lining, 1" concrete coating over the steel cylinder. OR: Welded Steel pipe, 1/2" cement mortar lining, 1" concrete coating over the steel cylinder.
A	1A	24"	184+00-405+20	ONLY: Welded Steel pipe, 1/2" cement mortar lining, 1" concrete coating over 1/8" coal-tar undercoat.
A	2	33"	405+20-869+90.66	ONLY: Welded Steel pipe, 3/4" cement mortar lining, 1" concrete coating over 1/8" coal-tar undercoat.
A	3	12"	0+00-28+09.13	ONLY: Welded Steel pipe, 1/2" cement mortar lining, 1" concrete coating over 1/8" coal-tar undercoat.
~~A~~	~~4~~	~~16"~~	~~0+00-4+87~~	~~ONLY: Welded Steel pipe, 1/2" cement mortar lining, 1" concrete coating over 1/8" coal-tar undercoat.~~
B	1	24"	0+00-184+00	~~EITHER:~~ M.P. pipe, 1/2" cement mortar lining, 1" concrete coating over the steel cylinder. ~~OR: Welded Steel pipe, 1/2" cement mortar lining, 1" concrete coating over the steel cylinder.~~
B	1B	24"	184+00-251+10 274+00-405+20	~~EITHER:~~ M.P. pipe, 1/2" cement mortar lining, 1-1/4" concrete coating over the steel cylinder. ~~OR: Welded Steel pipe, 1/2" cement mortar lining, 1-1/4" concrete coating over the steel cylinder.~~
B	1C	24"	251+10-274+00	~~EITHER: Welded Steel pipe, 1/2" cement mortar lining, double wrapped coal-tar coating. OR:~~ Welded Steel pipe, 1/2" concrete mortar lined, 1" concrete coating over 1/8" coal-tar undercoat.
B	2A	33"	405+20-683+00 702+00-729+00	~~EITHER:~~ M.P. pipe, 3/4" cement mortar lining, 1-1/4" concrete coating over the steel cylinder. ~~OR: Welded Steel pipe, 3/4" cement mortar lining, 1-1/4" concrete coating over the steel cylinder.~~
B	2B	33"	683+00-702+00	~~EITHER: Welded Steel pipe 3/4" cement mortar lining, double wrapped coal-tar coating. OR:~~ Welded Steel pipe, 3/4" concrete mortar lined, 1" concrete coating over 1/8" coal-tar undercoat.
B	2C	33"	729+00-778+00 791+94-869+90.66	~~EITHER:~~ M.P. pipe, 3/4" cement mortar lining, 1-1/2" concrete coating (Type V cement) over the steel cylinder. ~~OR: Welded Steel pipe, 3/4" cement mortar lining, 1-1/2" concrete coating (Type V cement) over the steel cylinder.~~
B	2D	33"	778+00-791+94	~~EITHER: Welded Steel pipe, 3/4" cement mortar lining, triple wrapped coal-tar coating. OR:~~ Welded Steel pipe, 3/4" concrete mortar lined, 1" concrete coating over 1/8" coal-tar undercoat.
B	3A	12"	0+00-28+09.13	~~EITHER:~~ M.P. pipe, 1/2" cement mortar lining, 1-1/4" concrete coating over the steel cylinder. ~~OR: Welded Steel pipe, 1/2" cement mortar lining, 1-1/4" concrete coating over steel cyl.~~
B	4A	16"	0+00-4+87	~~EITHER:~~ M.P. pipe, 1/2" cement mortar lining, 1-1/2" concrete coating over the steel cylinder. ~~OR: Welded Steel pipe, 1/2" cement mortar lining, 1-1/2" concrete coating (Type V cement) over steel cyl.~~

BID SCH.	BID ITEM	PIPE DIA.(I.D.)	STATION	ALTERNATE PIPE DESCRIPTION
C	1	24"	0+00-184+00	EITHER: M.P. pipe, 1/2" cement mortar lining, 1" concrete coating over the steel cylinder. OR: Welded Steel pipe, 1/2" cement mortar lining, 1" concrete coating over the steel cyl.
C	1D	24"	184+00-405+20	ONLY: Welded Steel pipe, 1/2" cement mortar lining, double wrapped coal-tar coating over steel cyl.
C	2E	33"	405+20-729+00	ONLY: Welded Steel pipe, 3/4" cement mortar lining, double wrapped coal-tar coating over steel cyl.
C	2F	33"	729+00-869+90.66	ONLY: Welded Steel pipe, 3/4" cement mortar lining, triple wrapped coal-tar coating over the steel cyl.
C	3B	12"	0+00-28+09.13	ONLY: Welded Steel pipe, 1/2" cement mortar lining, double wrapped coal-tar coating over steel cyl.
C	4B	16"	0+00-4+87	ONLY: Welded Steel pipe, 1/2" cement mortar lining, triple wrapped coal-tar coating over steel cyl.
D	1D	24"	0+00-405+20	ONLY: Welded Steel pipe, 1/2" cement mortar lining, double wrapped coal-tar coating over steel cyl.
D	2E	33"	405+20-729+00	ONLY: Welded Steel pipe, 3/4" cement mortar lining, double wrapped coal-tar coating over steel cyl.
D	2F	33"	729+00-869+90.66	ONLY: Welded Steel pipe, 3/4" cement mortar lining, triple wrapped coal-tar coating over steel cyl.
D	3B	12"	0+00-28+09.13	ONLY: Welded Steel pipe, 1/2" cement mortar lining, double wrapped coal-tar coating over steel cyl.
D	4B	16"	0+00-4+87	ONLY: Welded Steel pipe, 1/2" cement mortar lining, triple wrapped coal-tar coating over steel cyl.

NOTE: In the above Pipe Descriptions the abbreviation M.P. stands for Modified Prestressed.

Where alternate types of bedding B or C are shown on the profile - Type B shall be used for coal-tar coated pipe and Type B or C at contractors option on cement coated pipe.

Return to Revised Index

No.	DATE	REVISION	By

SONOMA COUNTY FLOOD CONTROL AND WATER CONSERVATION DISTRICT

PETALUMA AQUEDUCT
PLAN & PROFILE INDEX

SCALE: AS SHOWN
DATE: 12-1-69
DESIGNED: RE 10702
APPROVED: CHIEF ENGINEER RE 8271
SUBMITTED: RE 8557
DRAWN: VT-KIM
CHECKED:
DRAWING NUMBER: 51-4-102.2

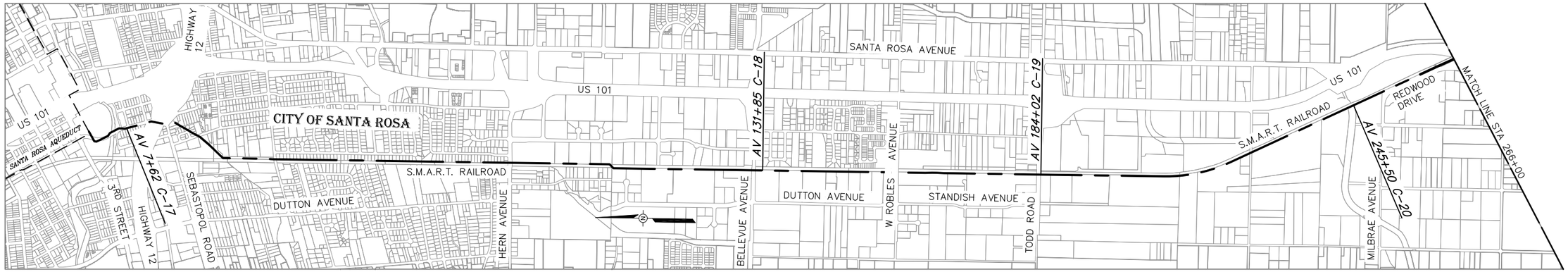

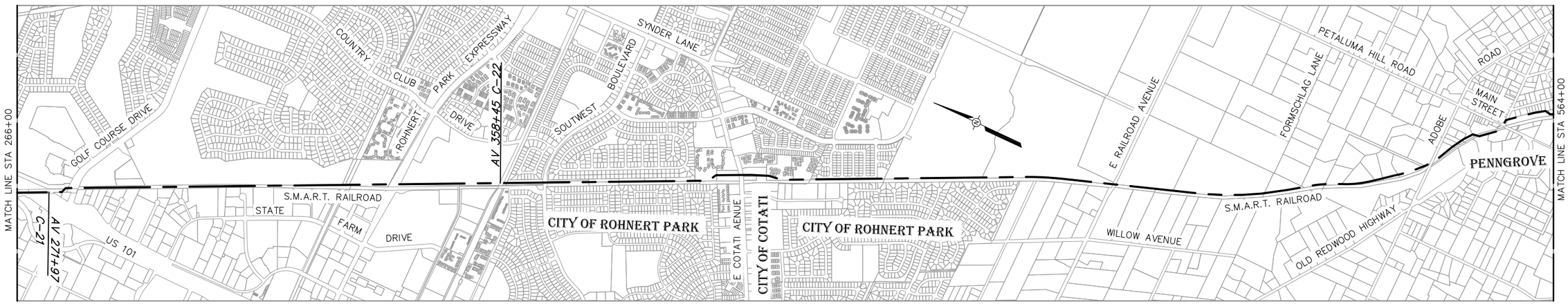

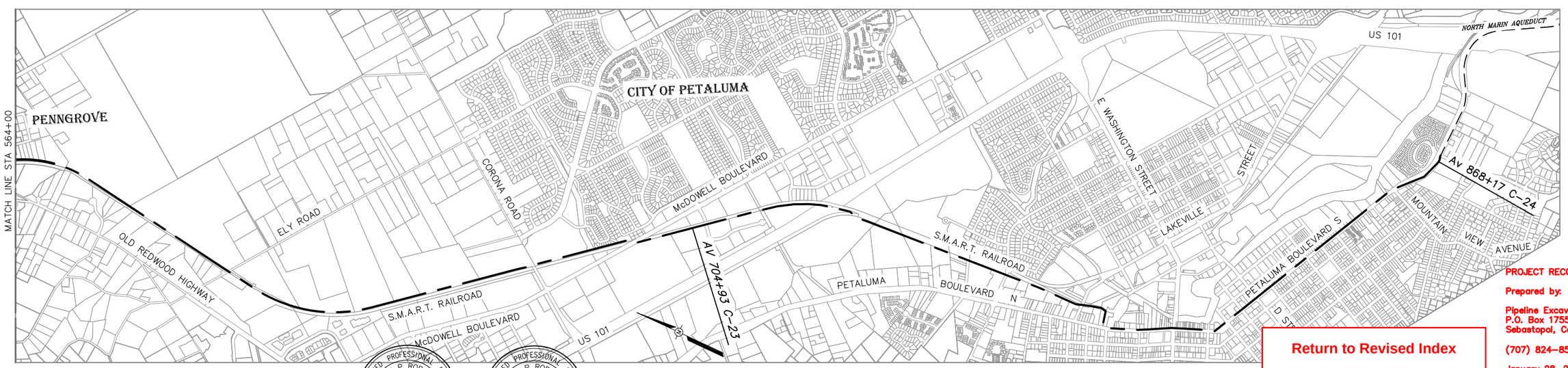

PROJECT RECORD DRAWING

Prepared by:

Pipeline Excavators
P.O. Box 1755
Sebastopol, Ca 95473

(707) 824-8546

January 28, 2009

Return to Revised Index

BAR LENGTH ON ORIGINAL DRAWING EQUALS ONE INCH. ADJUST SCALE ACCORDINGLY

1000 0 1000 2000 4000

REGISTERED PROFESSIONAL ENGINEER DALE P. ROBERTS No. M 029944 Exp. 6/30/08 MECHANICAL STATE OF CALIFORNIA

REGISTERED PROFESSIONAL ENGINEER DALE P. ROBERTS No. C 67949 Exp. 6/30/09 CIVIL STATE OF CALIFORNIA

NO.	DATE	REVISION	BY
	07/25/08	CONFORMED	
R	04-14-09	RECORD DRAWING ACCEPTED BY SCWA	

SONOMA COUNTY WATER AGENCY

SCALE : AS SHOWN
DATE : 28/05/2008
DRAWN : ADF
REVIEWED :

AIR VALVE UPGRADE REPLACEMENT PHASE 1
PETALUMA AQUEDUCT
GENERAL LOCATION MAP

FILE NAME: 4078c-16R.dwg
CONTRACT NUMBER: 60-4-7 #14

DRAWING NUMBER: C-15

SHEET 20 OF 63

\\Sd-data\Proj\water transmission\pipelines\4078_AV-Replacement\4078_record-dwgs\4078c-16R.dwg

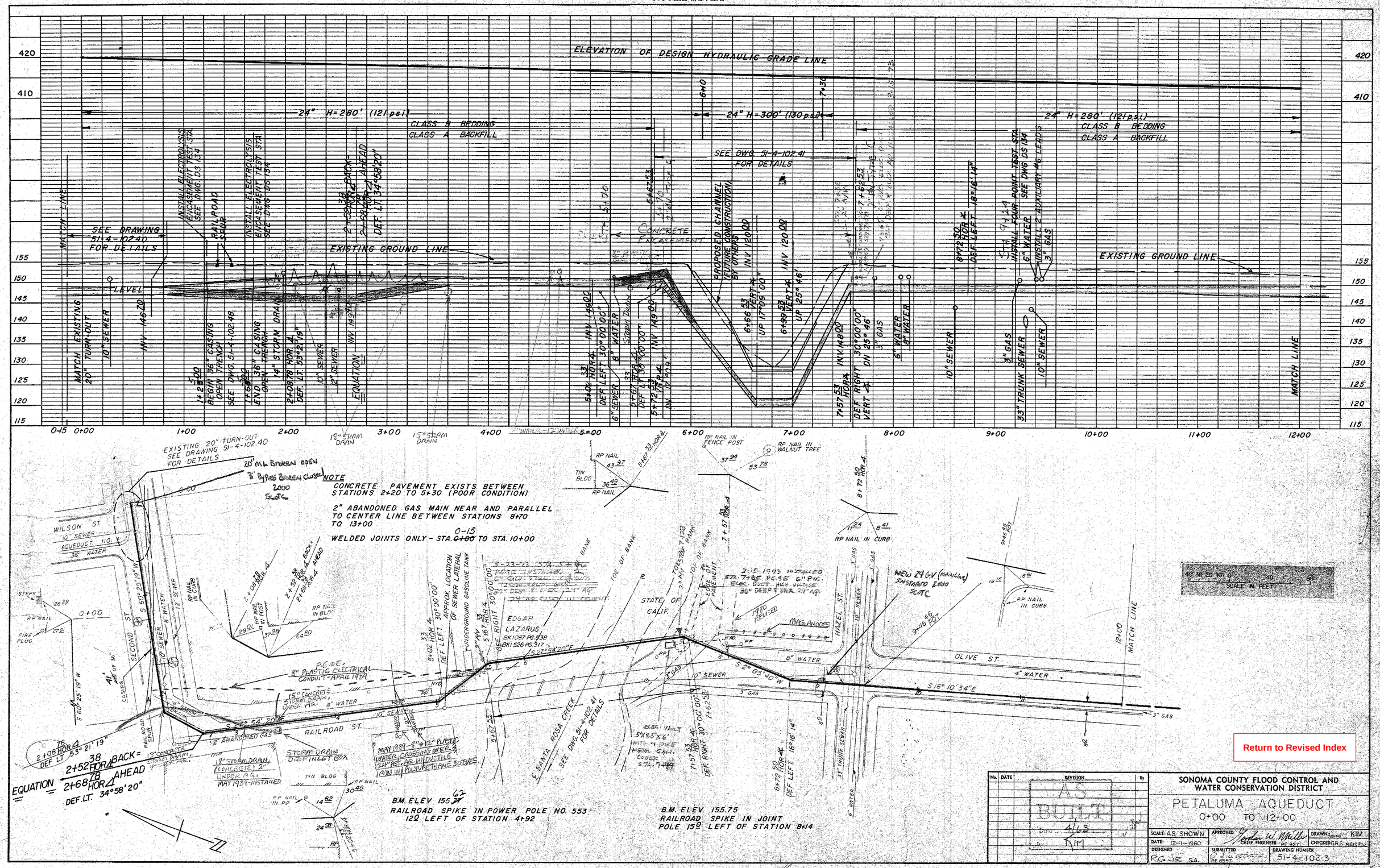

Return to Revised Index

No.	DATE	REVISION	By
		AS BUILT 4/63 KIM	

SONOMA COUNTY FLOOD CONTROL AND WATER CONSERVATION DISTRICT

PETALUMA AQUEDUCT
0+00 TO 12+00

SCALE: AS SHOWN | APPROVED: CHIEF ENGINEER | DRAWN: KIM | CHECKED: G.R.S. REG. 7556
DATE: 12-1-1960 | DESIGNED: R.G.J.Jr. S.A. | SUBMITTED: RE 8557 | DRAWING NUMBER: 51-4-102.3

VIEW – A

NTS

SITE PLAN

SCALE: 1" =100'

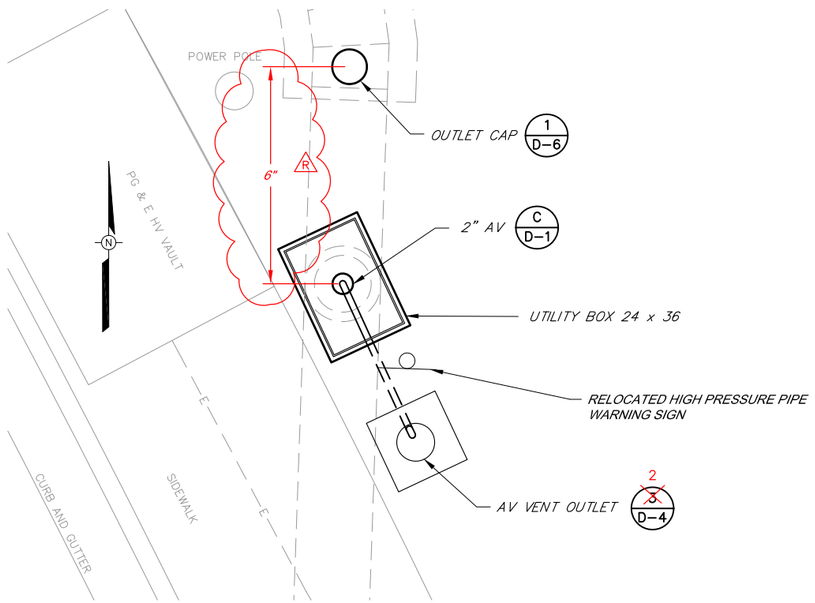

PARTIAL PLAN

NTS

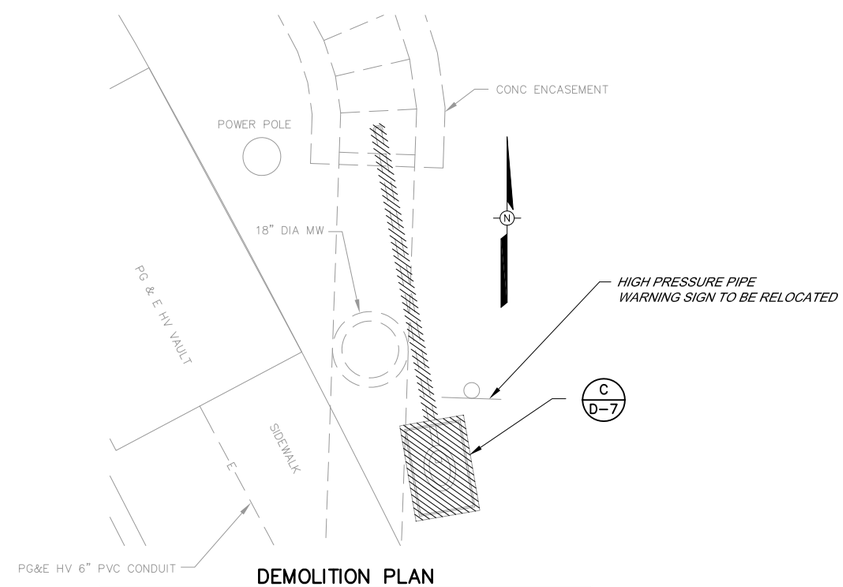

DEMOLITION PLAN

NTS

PROJECT RECORD DRAWING

Prepared by:

Pipeline Excavators
P.O. Box 1755
Sebastopol, Ca 95473

(707) 824–8546

January 28, 2009

NOTE: APPROXIMATELY ~~3~~ 6'-1" FEET OF COVER OVER PIPE (R)

Return to Revised Index

REGISTERED PROFESSIONAL ENGINEER DALE P. ROBERTS No. M 029944 Exp. 6/30/08 MECHANICAL STATE OF CALIFORNIA

REGISTERED PROFESSIONAL ENGINEER DALE P. ROBERTS No. C 67949 Exp. 6/30/09 CIVIL STATE OF CALIFORNIA

BAR LENGTH ON ORIGINAL DRAWING EQUALS ONE INCH. ADJUST SCALE ACCORDINGLY

NO.	DATE	REVISION	BY
	07/25/08	CONFORMED	
R	04–14–09	RECORD DRAWING ACCEPTED BY SCWA	

SONOMA COUNTY WATER AGENCY

SCALE: AS SHOWN
DATE: 28/05/2008
DRAWN: ADF
REVIEWED:

AIR VALVE UPGRADE PROJECT PHASE 1
PETALUMA AQUEDUCT
STA 7+62 SITE PLAN AND DETAILS

FILE NAME: 4078c17–24R.dwg
CONTRACT NUMBER: 60–4–7 #14
DRAWING NUMBER: C–16
SHEET 21 OF 63

\\Sd-data\Proj\water transmission\pipelines\4078_AV-Replacement\4078_record-dwgs\4078c17-24R.dwg

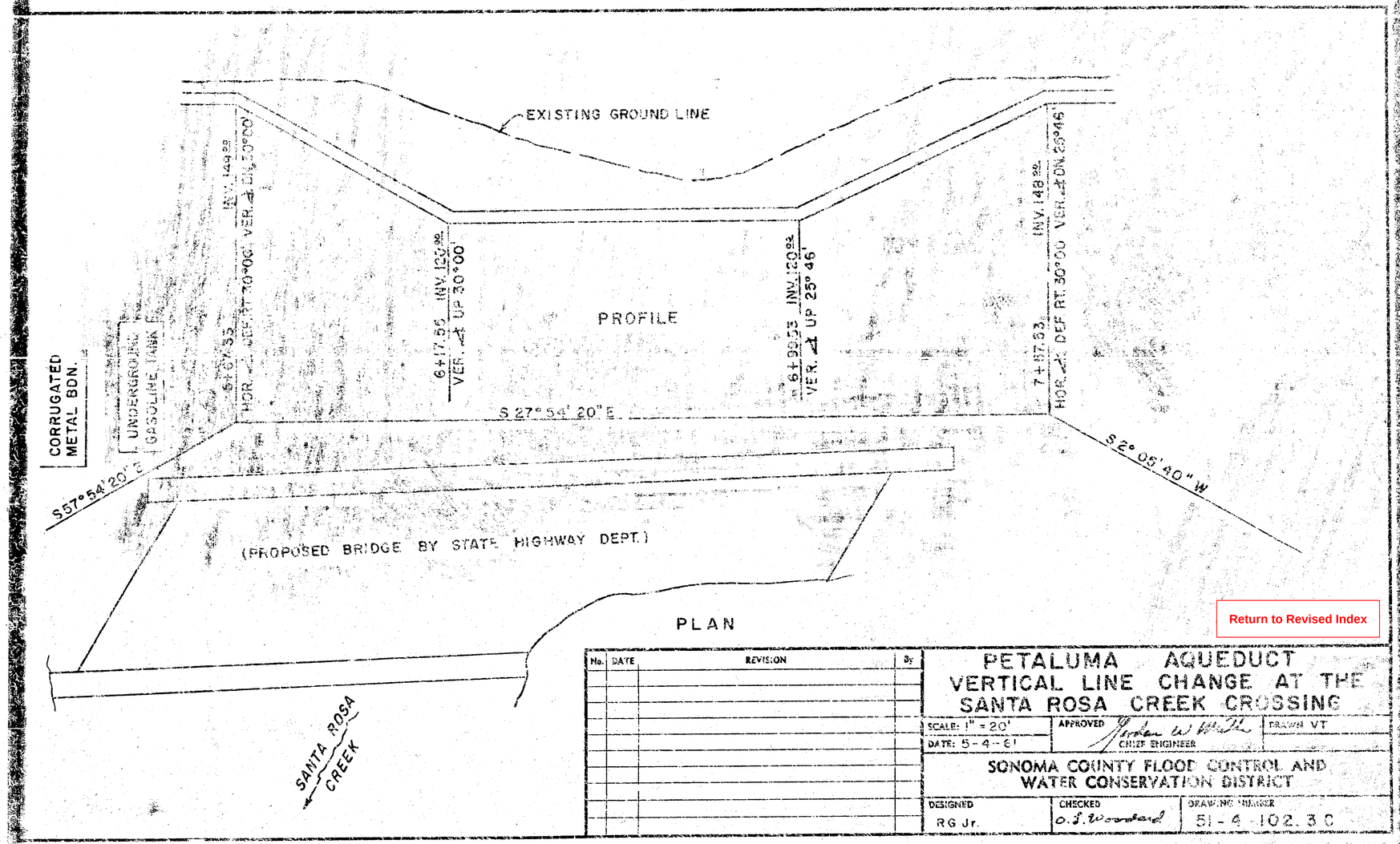

Return to Revised Index

No.	DATE	REVISION	By

PETALUMA AQUEDUCT
VERTICAL LINE CHANGE AT THE SANTA ROSA CREEK CROSSING

SCALE: 1" = 20'	APPROVED [signature] CHIEF ENGINEER	DRAWN VT
DATE: 5-4-61		

SONOMA COUNTY FLOOD CONTROL AND WATER CONSERVATION DISTRICT

DESIGNED	CHECKED	DRAWING NUMBER
RG Jr.	O. S. Woodard	51-4-102.3 C

PRINTED ON DIEPO NO. 1000H CLEARPRINT

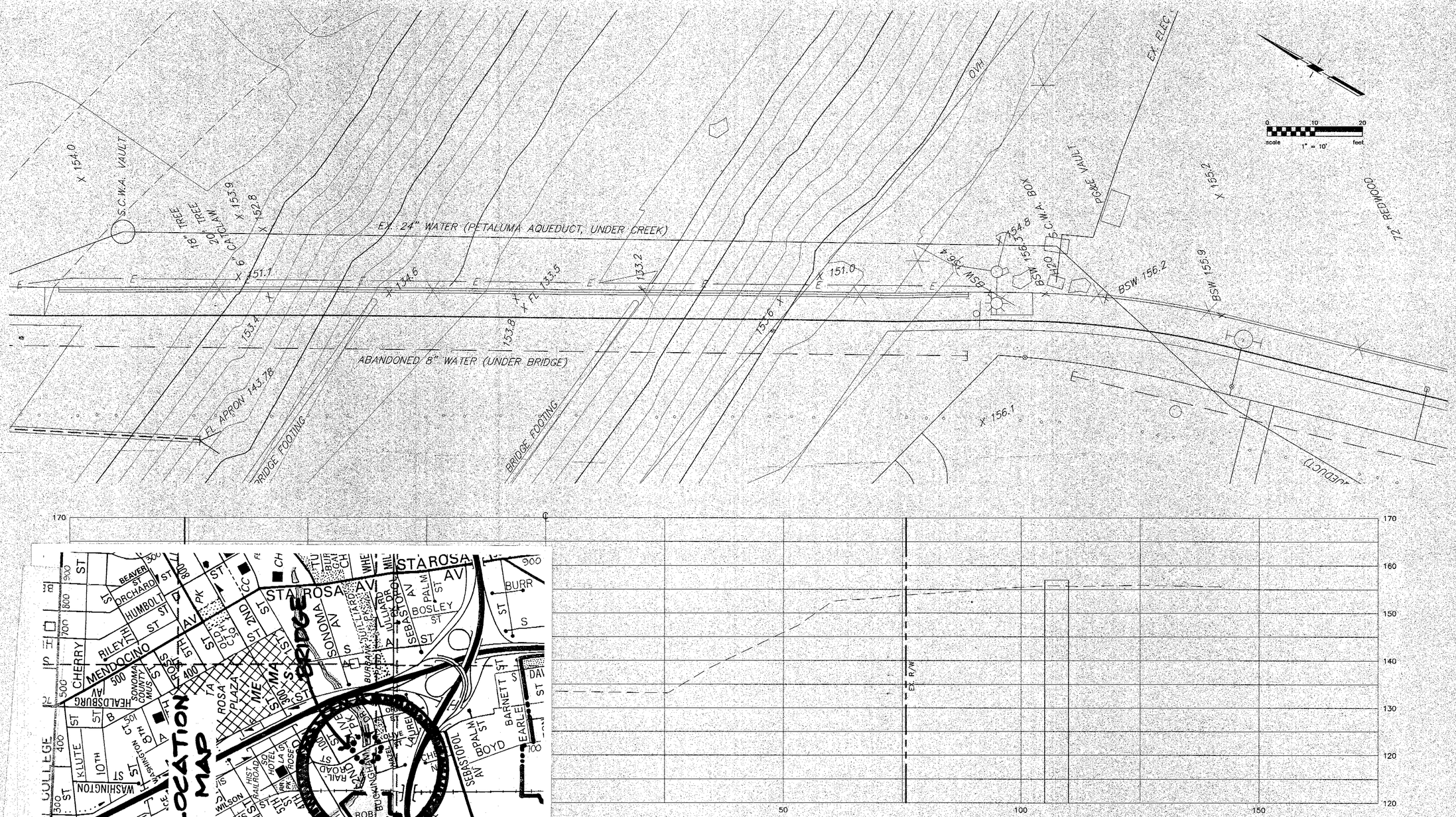

PETALUMA A.Q. CROSSING SANTA ROSA CREEK (CITY OF SANTA ROSA)

INSERT BEHIND S-4-102.41

Return to Revised Index

CIVIL ENGINEERS • URBAN PLANNERS • LAND SURVEYORS • LANDSCAPE ARCHITECTS

15 THIRD STREET, SANTA ROSA, CA 95401
TEL (707) 542-6451 FAX (707) 542-5212

RICHARD G. CARLILE

DATE

R.C.E. 17211

Exp. 6/30/01 CIVIL STATE OF CALIFORNIA

Job Number 96030.A0.03

Copyright © 1999 Carlile-Macy

No.	Date	Revision	By

CITY OF SANTA ROSA

SANTA ROSA CREEK
PRINCE MEMORIAL GREENWAY

CREEK SECTIONS
24" AQUEDUCT @ PIPE ALIGNMENT

Date: OCTOBER 1999 Scale: 1" = 10'

APPROVED: Rosalind A. Daniels, Director of Public Works

By _____ Date _____
Deputy Director–Engineering C30696 Exp. 3–31–00

DWN ____ ____
CHK ____ ____

Sheet C8 of ____ Sheets

File Number: 99–0001

51-4-102.3D

DEC 29 1999

AutoCAD file name: A0LAYS.dwg
AutoCAD xref files: 0030AXS.dwg

G:\PROJ\96030\60030\aplayas, Wed Dec 29 16:53:03 1999 Screened Plot By: Carlile Macy, Santa Rosa, CA

Return to Revised Index

No.	DATE	REVISION	By
		4/63 KIM	

SONOMA COUNTY FLOOD CONTROL AND WATER CONSERVATION DISTRICT

PETALUMA AQUEDUCT

12+00 TO 24+00

SCALE: AS SHOWN
DATE: 12-1-1960
DESIGNED: R.G.Jr. S.A.
APPROVED: Gordon W. Miller, CHIEF ENGINEER RE 6271
SUBMITTED: C. J. ... RE 8557
DRAWN: Bauer - KIM
CHECKED: G.R.S. RE 10702
DRAWING NUMBER: 51-4-102.4

SEE SHEET 102.4A - LINE CHANGE

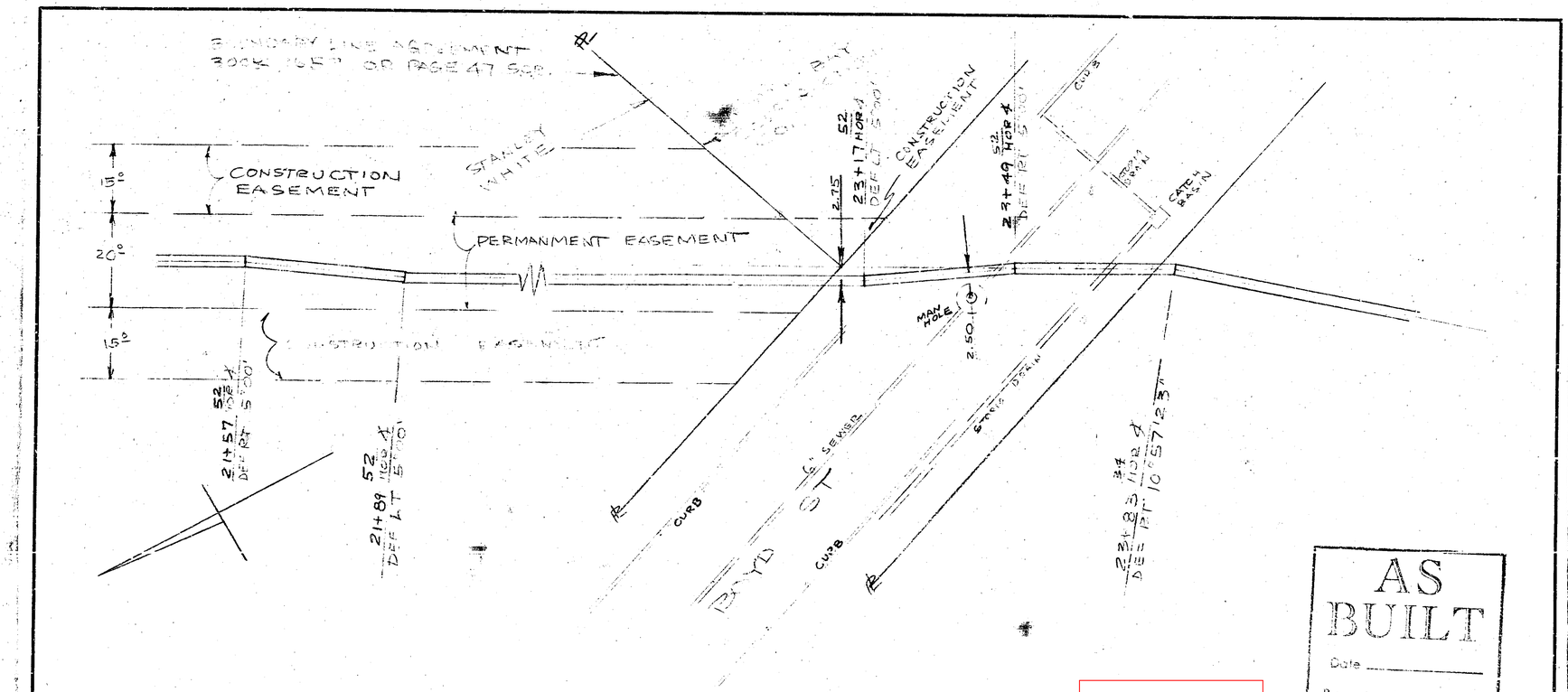

AS BUILT

Date _____

By: _____

Return to Revised Index

No.	DATE	REVISION	By

PETALUMA AQUEDUCT
LINE CHANGE BETWEEN
21+57.52 TO 23+49.52

SCALE: 1" = 20	APPROVED [signature] CHIEF ENGINEER	DRAWN RGJR.
DATE: 2-20-61		

SONOMA COUNTY FLOOD CONTROL AND WATER CONSERVATION DISTRICT

DESIGNED	CHECKED	DRAWING NUMBER
R.G.JR		51-1-102.4A

PRINTED ON DIEPO NO. 1000H CLEARPRINT

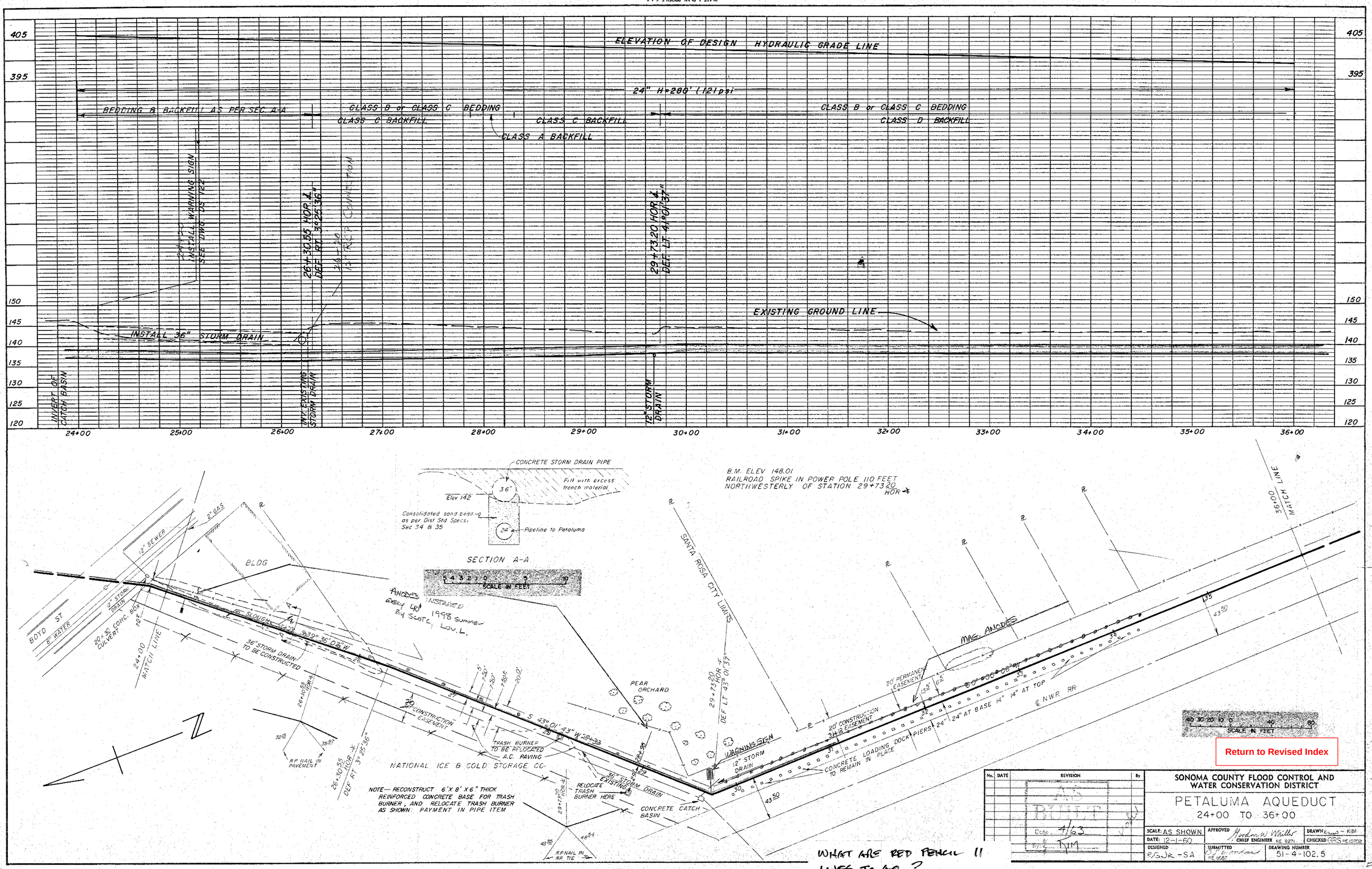

Return to Revised Index

No.	DATE	REVISION	By
		AS BUILT Date 4/63 By KIM	

SONOMA COUNTY FLOOD CONTROL AND WATER CONSERVATION DISTRICT

PETALUMA AQUEDUCT
24+00 TO 36+00

SCALE: AS SHOWN	APPROVED Gordon W. Miller CHIEF ENGINEER RE 8271	DRAWN [illegible] - KIM
DATE: 12-1-60		CHECKED GRS RE 10702
DESIGNED RGJR - SA	SUBMITTED [illegible] RE 8557	DRAWING NUMBER 51-4-102.5

WHAT ARE RED PENCIL 11 LINES TO AQ.?
(FROM 28+33 TO 31+13)

PLATE 1-PLAN-PROFILE-F.A.S.
CLEARPRINT PAPER CO., S.F. CAL.
No. 1000H-1

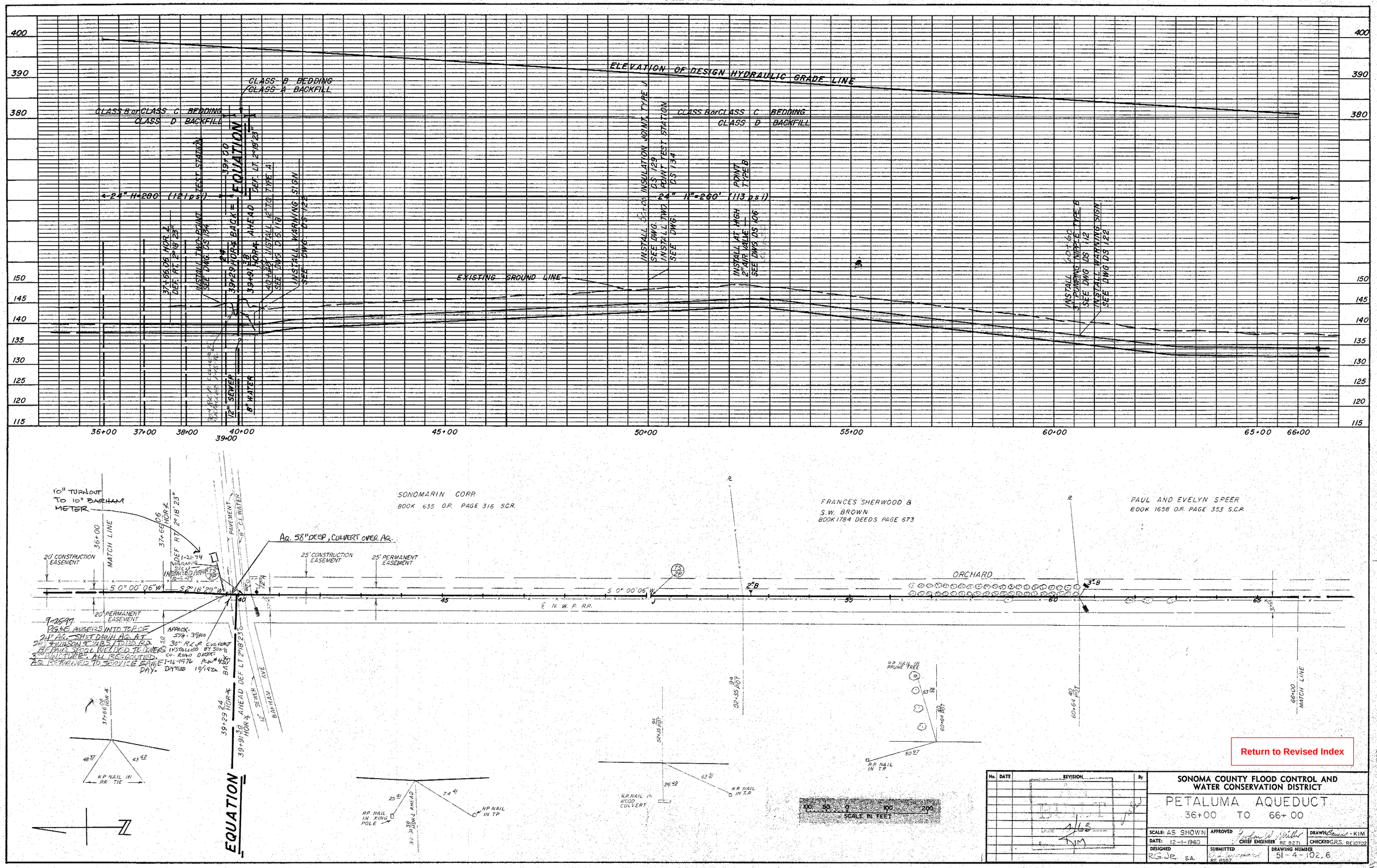

Return to Revised Index

No.	DATE	REVISION	By

SONOMA COUNTY FLOOD CONTROL AND WATER CONSERVATION DISTRICT

PETALUMA AQUEDUCT
36+00 TO 66+00

SCALE: AS SHOWN	APPROVED Jordan W. Miller CHIEF ENGINEER RE 8271	DRAWN Sawa - KIM
DATE: 12-1-1960		CHECKED G.R.S. RE 10702
DESIGNED R.G.Jr. S.A.	SUBMITTED G.R. Sundstrom RE 8867	DRAWING NUMBER 51-4-102.6

PLATE 1-PLAN-PROFILE-F.A.S.
CLEARPRINT PAPER CO. S.F. CAL.
No. 1000H-1

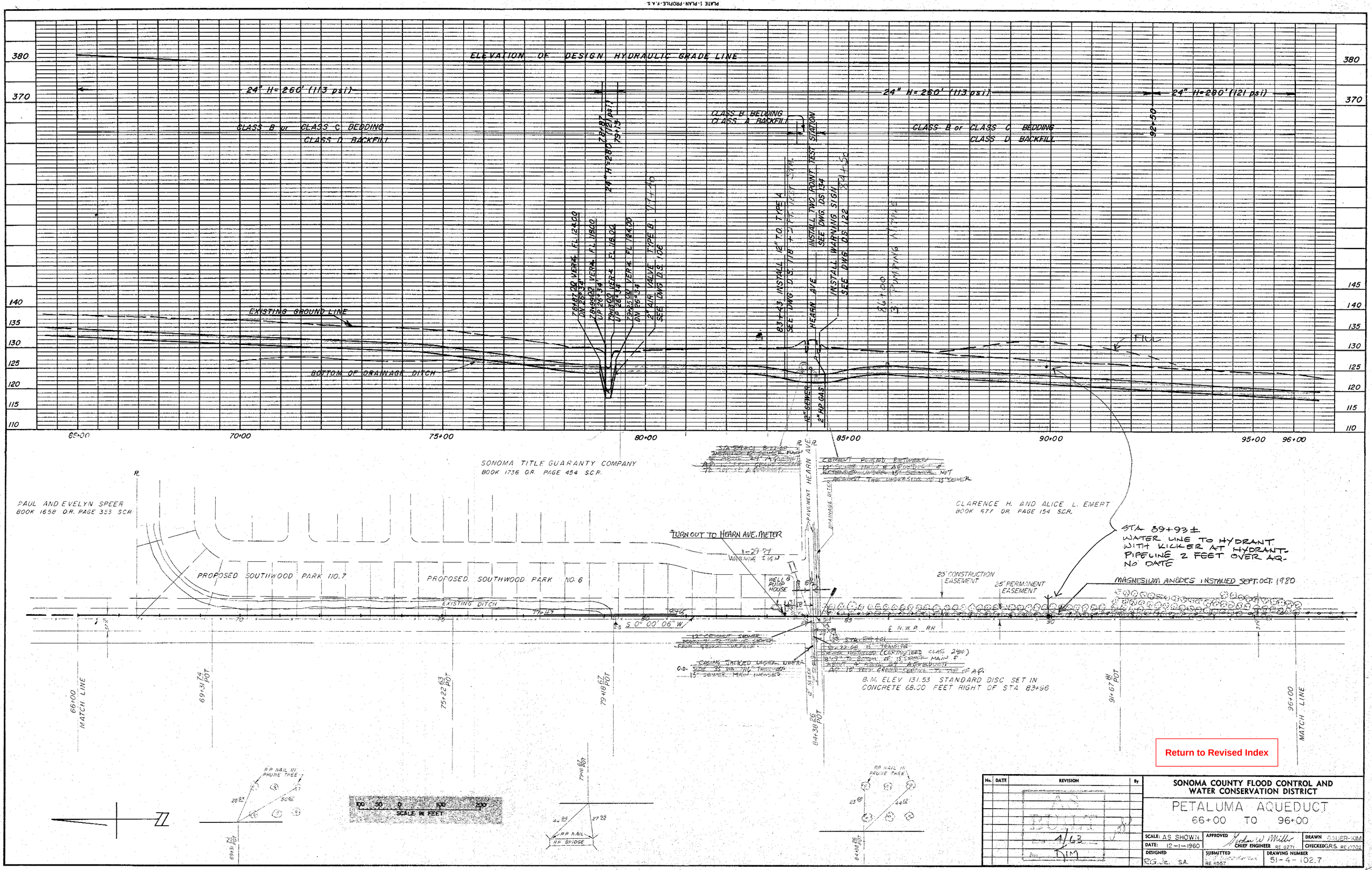

Return to Revised Index

No.	DATE	REVISION	By

AS BUILT 4/63 DJM

SONOMA COUNTY FLOOD CONTROL AND WATER CONSERVATION DISTRICT

PETALUMA AQUEDUCT
66+00 TO 96+00

SCALE: AS SHOWN	APPROVED John W. Miller, CHIEF ENGINEER RE 3271	DRAWN BAUER-KIM
DATE: 12-1-1960		CHECKED G.R.S. RE 10702
DESIGNED R.G.J.E. S.A.	SUBMITTED RE 8557	DRAWING NUMBER 51-4-102.7

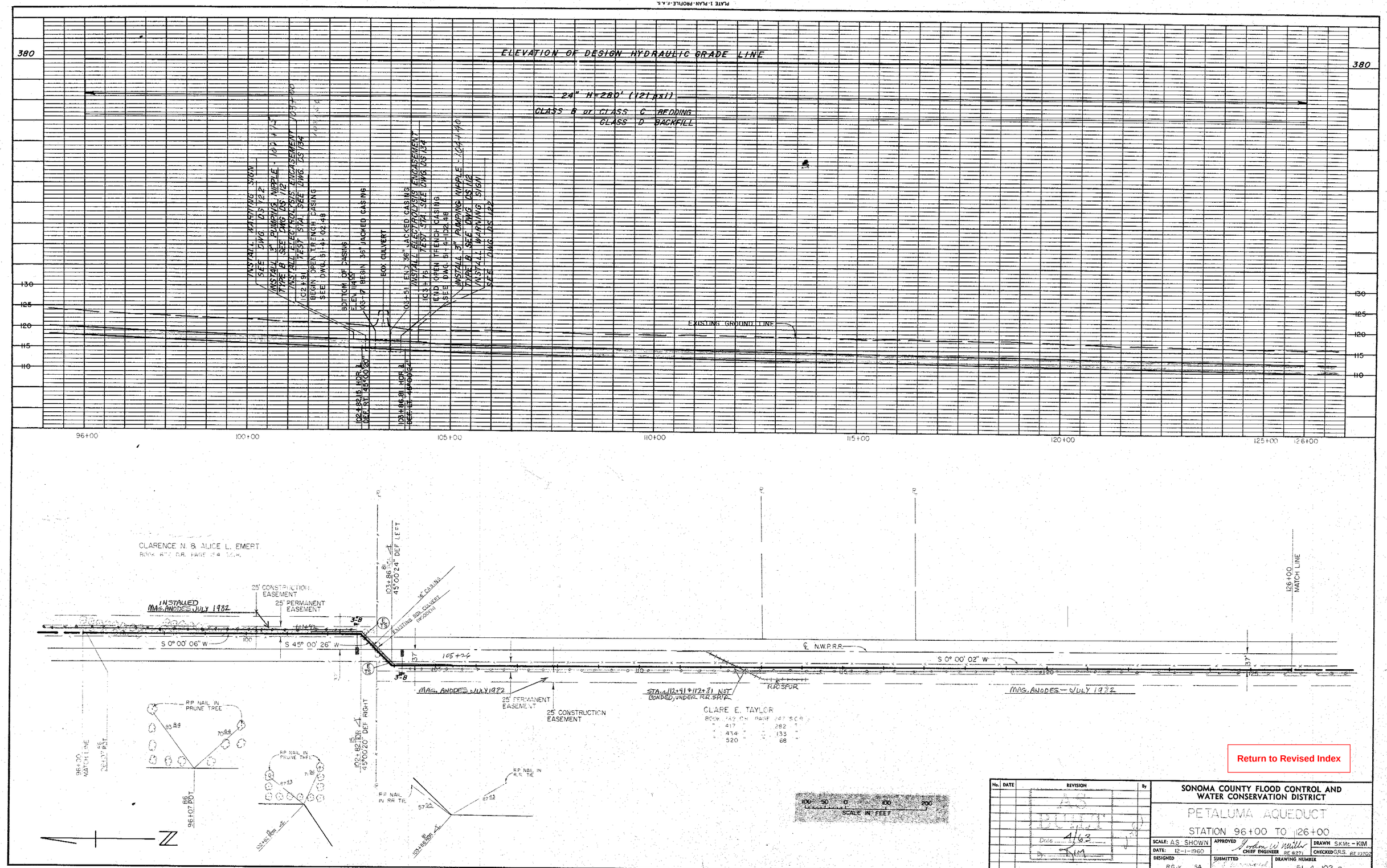

Return to Revised Index

No.	DATE	REVISION	By
		AS BUILT Date 4/63 By KIM	

SONOMA COUNTY FLOOD CONTROL AND WATER CONSERVATION DISTRICT

PETALUMA AQUEDUCT

STATION 96+00 TO 126+00

SCALE: AS SHOWN	APPROVED Gordon W. Miller CHIEF ENGINEER RE 8271	DRAWN SKMc - KIM	
DATE: 12-1-1960		CHECKED G.R.S. RE 10702	
DESIGNED R.G.Jr. SA	SUBMITTED RE 6557	DRAWING NUMBER 51-4-102.8	

PLATE 1-PLAN-PROFILE-F.A.S.
CLEARPRINT PAPER CO., S.F. CAL.
No. 1000H-1

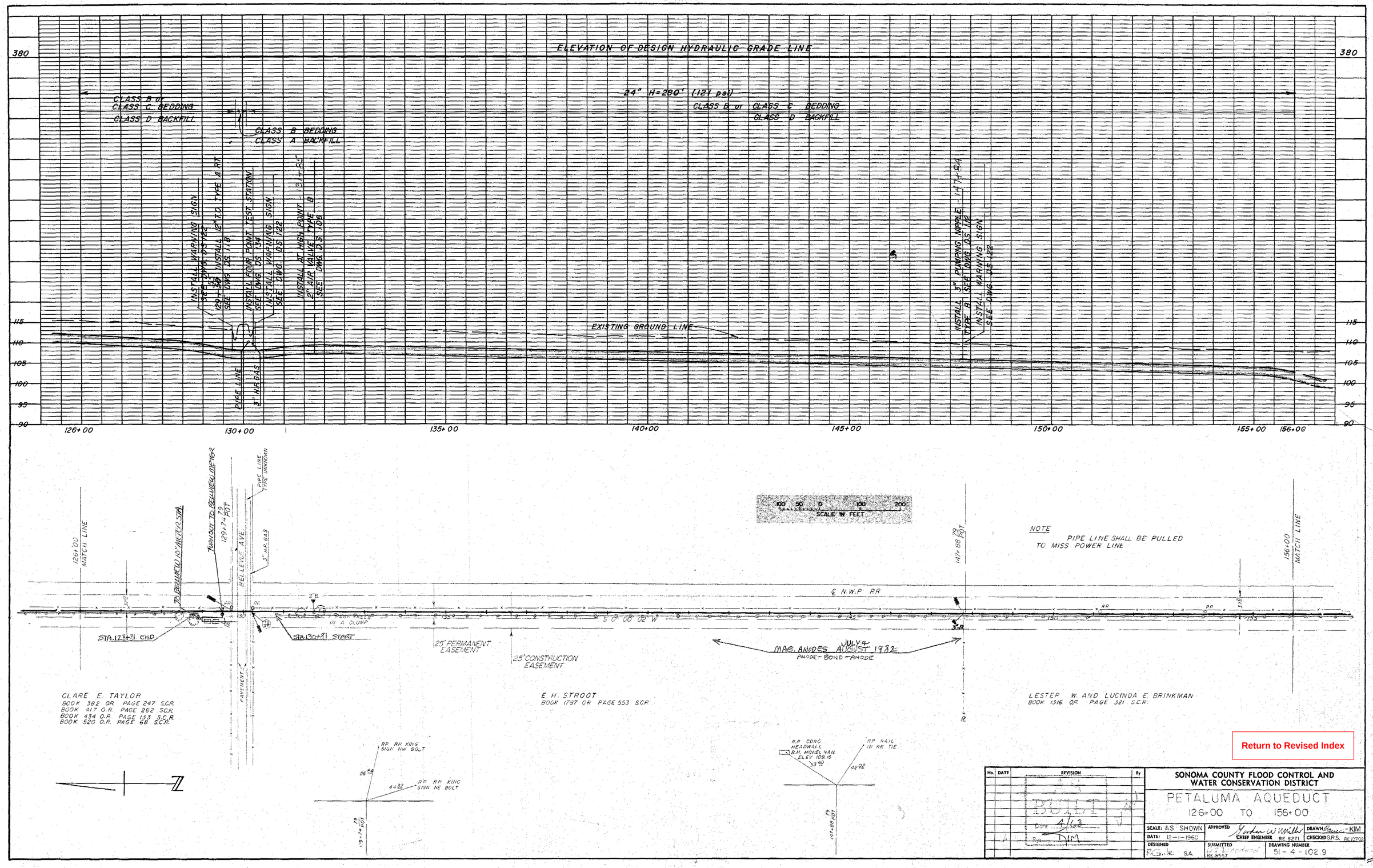

VIEW – A 3100 DUTTON AVENUE

NTS

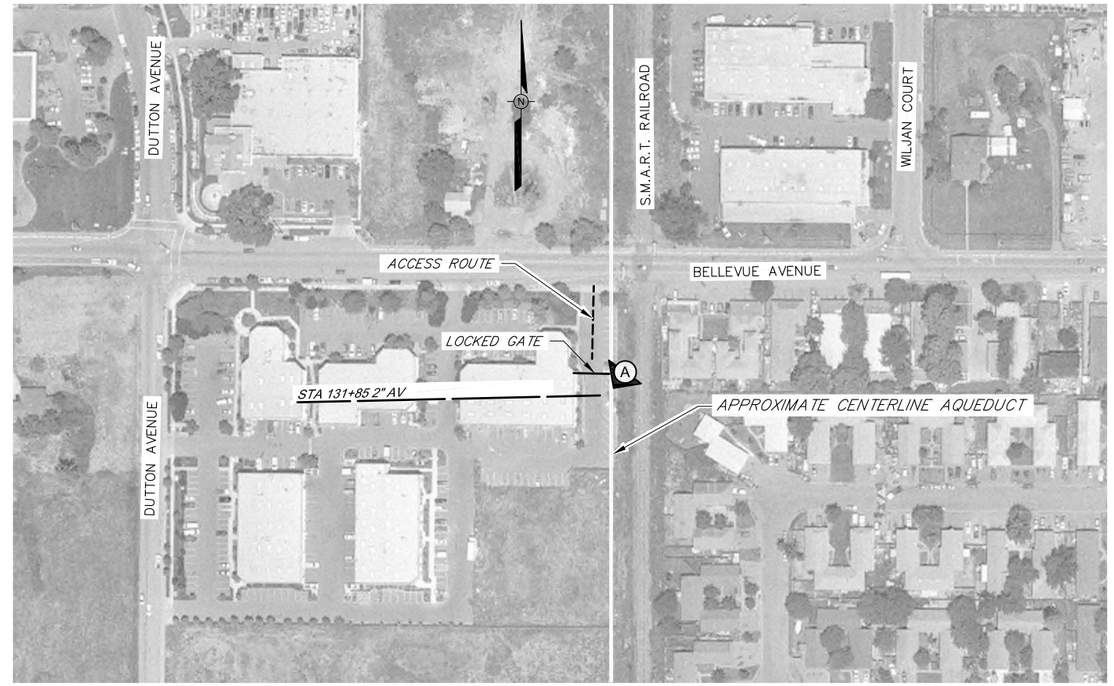

SITE PLAN

SCALE: 1" =100'

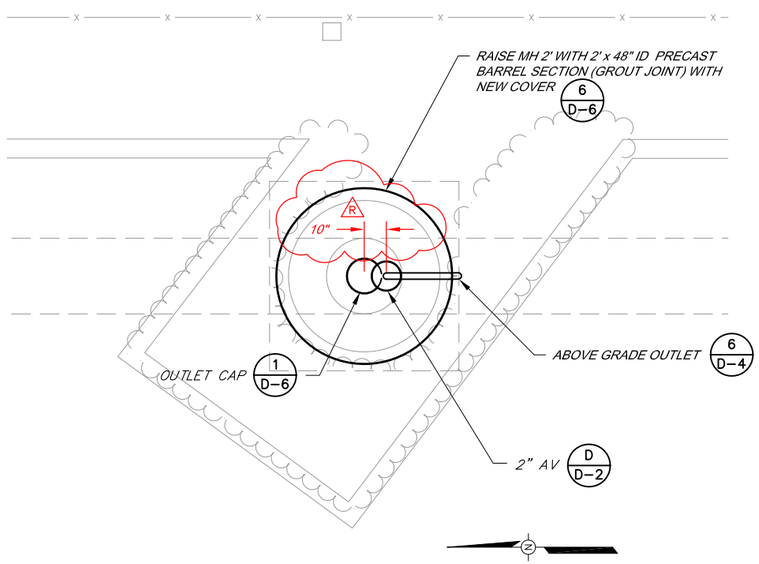

PARTIAL PLAN

NTS

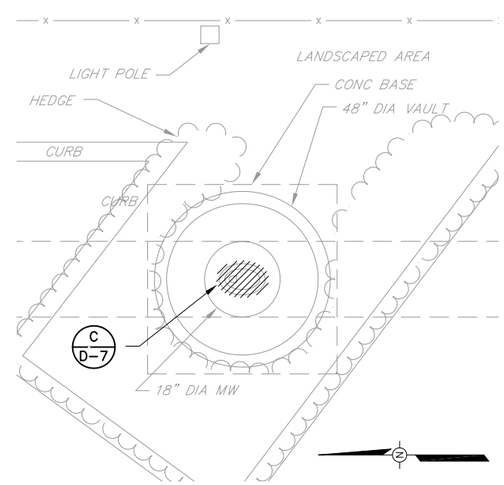

DEMOLITION PLAN

NTS

PROJECT RECORD DRAWING

Prepared by:

Pipeline Excavators
P.O. Box 1755
Sebastopol, Ca 95473

(707) 824–8546

January 28, 2009

NOTE:
APPROXIMATELY 4 FEET OF COVER OVER PIPE

Return to Revised Index

BAR LENGTH ON ORIGINAL DRAWING EQUALS ONE INCH. ADJUST SCALE ACCORDINGLY

REGISTERED PROFESSIONAL ENGINEER DALE P. ROBERTS No. M 029944 Exp. 6/30/08 MECHANICAL STATE OF CALIFORNIA

REGISTERED PROFESSIONAL ENGINEER DALE P. ROBERTS No. C 67949 Exp. 6/30/09 CIVIL STATE OF CALIFORNIA

NO.	DATE	REVISION	BY
	07/25/08	CONFORMED	
R	04–14–09	RECORD DRAWING ACCEPTED BY SCWA	

SONOMA COUNTY WATER AGENCY

SCALE: AS SHOWN
DATE: 28/05/2008
DRAWN: ADF
REVIEWED:

AIR VALVE UPGRADE PROJECT PHASE 1
PETALUMA AQUEDUCT
STA 131+85 SITE PLAN AND DETAILS

FILE NAME: 4078c17–24R.dwg
CONTRACT NUMBER: 60–4–7 #14
DRAWING NUMBER: C–17
SHEET 22 OF 63

\\Sd-data\Proj\water transmission\pipelines\4078_AV-Replacement\4078_record-dwgs\4078c17-24R.dwg

PLATE 1-PLAN-PROFILE-E.A.S.
CLEARPRINT PAPER CO. S.F. CAL.
No. 1000H-1

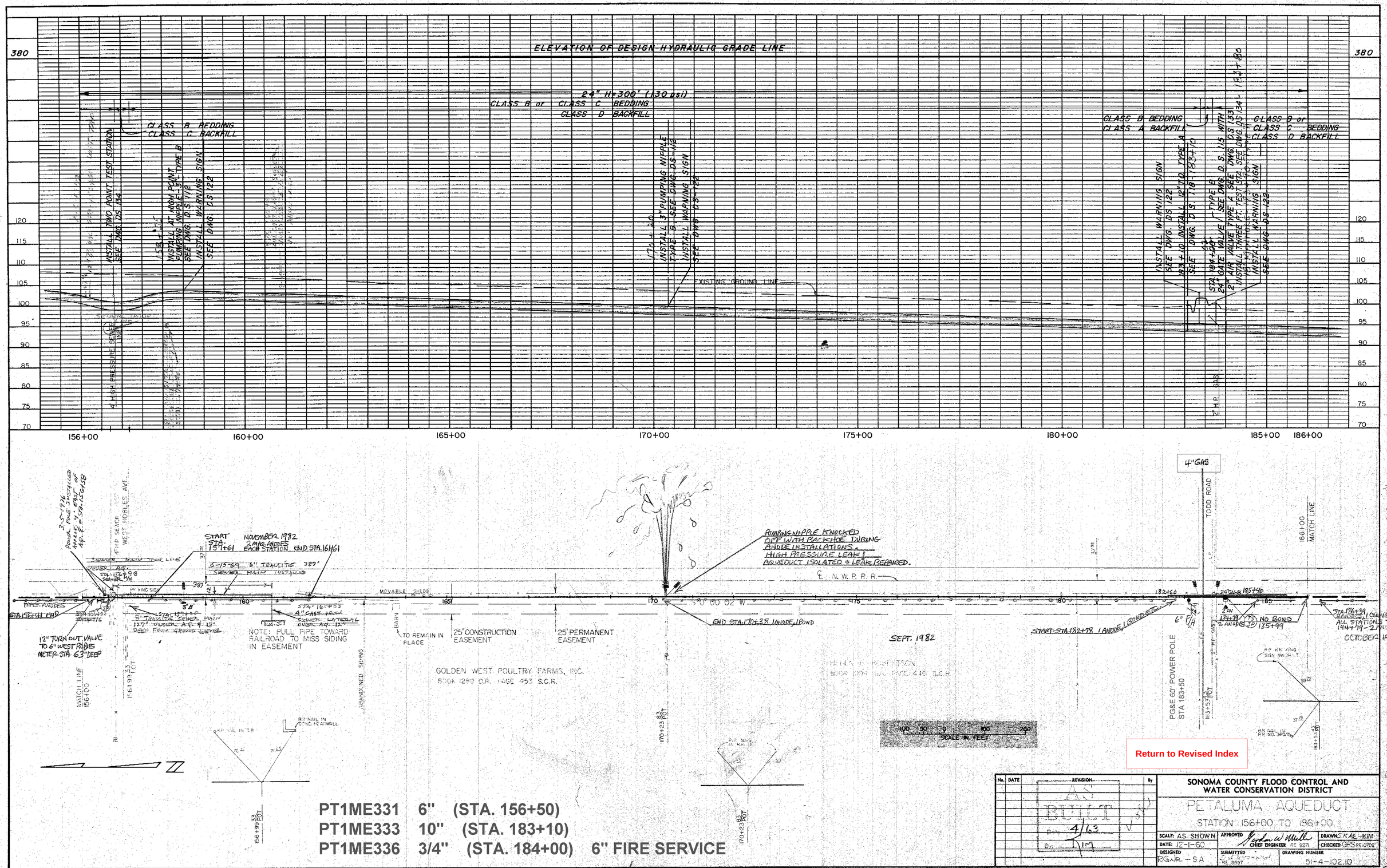

PT1ME331 6" (STA. 156+50)
PT1ME333 10" (STA. 183+10)
PT1ME336 3/4" (STA. 184+00) 6" FIRE SERVICE

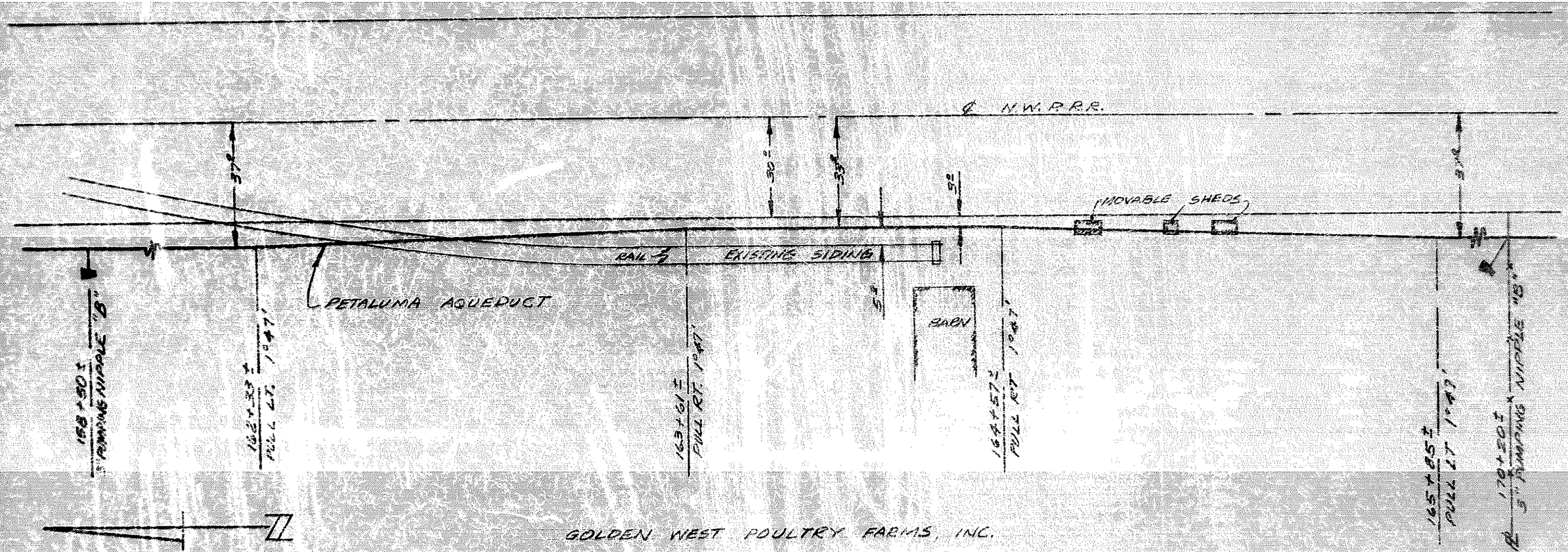

Return to Revised Index

No.	DATE	REVISION	By

PETALUMA AQUEDUCT

SHOWING LOCATION OF TURN-OUTS

SCALE: 1" = 30'
DATE: 2-7-61
APPROVED: CHIEF ENGINEER
DRAWN: RGJR

SONOMA COUNTY FLOOD CONTROL AND WATER CONSERVATION DISTRICT

DESIGNED: O.L.W.
CHECKED:
DRAWING NUMBER: 51-4-10210A

PRINTED ON DIEPO NO. 1000H CLEARPRINT

VIEW – A 238 TODD ROAD

NTS

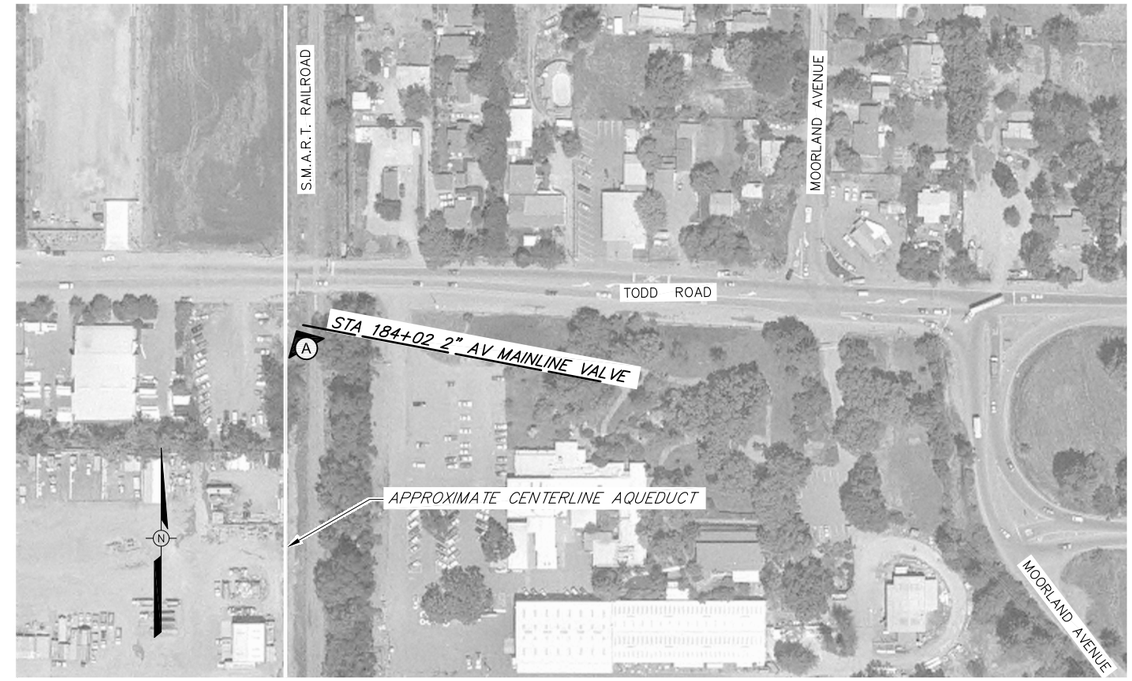

SITE PLAN

SCALE: 1" =100'

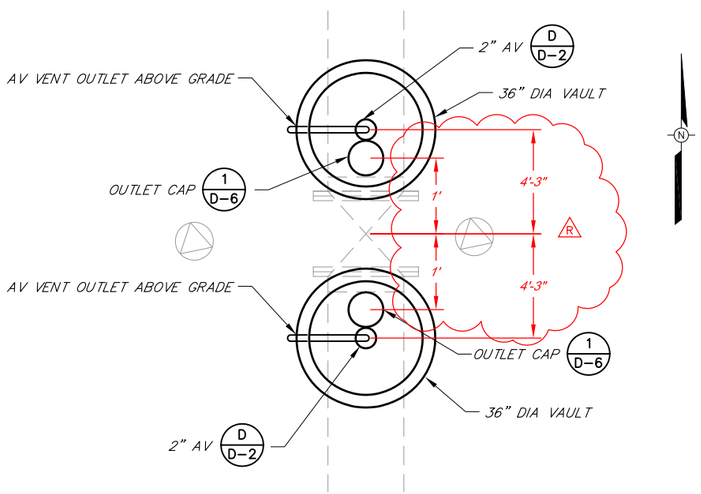

PARTIAL PLAN

NTS

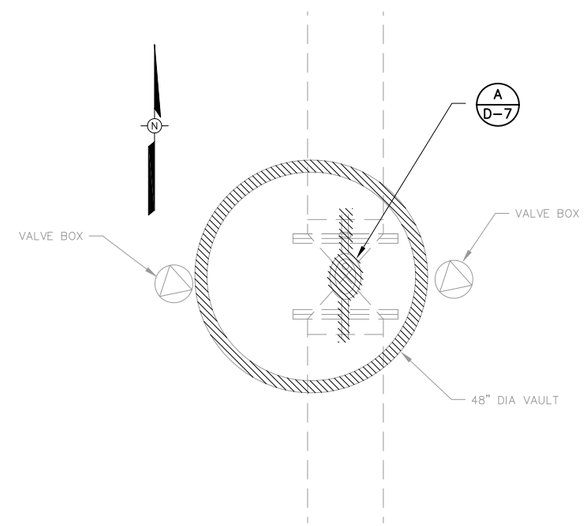

DEMOLITION PLAN

NTS

PROJECT RECORD DRAWING

Prepared by:

Pipeline Excavators
P.O. Box 1755
Sebastopol, Ca 95473

(707) 824–8546

January 28, 2009

Return to Revised Index

NOTE: APPROXIMATELY 5.7' FEET OF COVER OVER PIPE

BAR LENGTH ON ORIGINAL DRAWING EQUALS ONE INCH. ADJUST SCALE ACCORDINGLY

REGISTERED PROFESSIONAL ENGINEER DALE P. ROBERTS No. M 029944 Exp. 6/30/08 MECHANICAL STATE OF CALIFORNIA

REGISTERED PROFESSIONAL ENGINEER DALE P. ROBERTS No. C 67949 Exp. 6/30/09 CIVIL STATE OF CALIFORNIA

NO.	DATE	REVISION	BY
	07/25/08	CONFORMED	
R	04–14–09	RECORD DRAWING ACCEPTED BY SCWA	

SONOMA COUNTY WATER AGENCY

SCALE: AS SHOWN
DATE: 28/05/2008
DRAWN: ADF
REVIEWED:

AIR VALVE UPGRADE PROJECT PHASE 1
PETALUMA AQUEDUCT
STA 184+02 SITE PLAN AND DETAILS

FILE NAME: 4078c17–24R.dwg
CONTRACT NUMBER: 60–4–7 #14
DRAWING NUMBER: C–18
SHEET 23 OF 63

\\Sd-data\Proj\water transmission\pipelines\4078_AV-Replacement\4078_record-dwgs\4078c17-24R.dwg

PLATE 1. PLAN-PROFILE-T.A.S.
CLEARPRINT PAPER CO., S. F. CAL.
No. 1000H-1

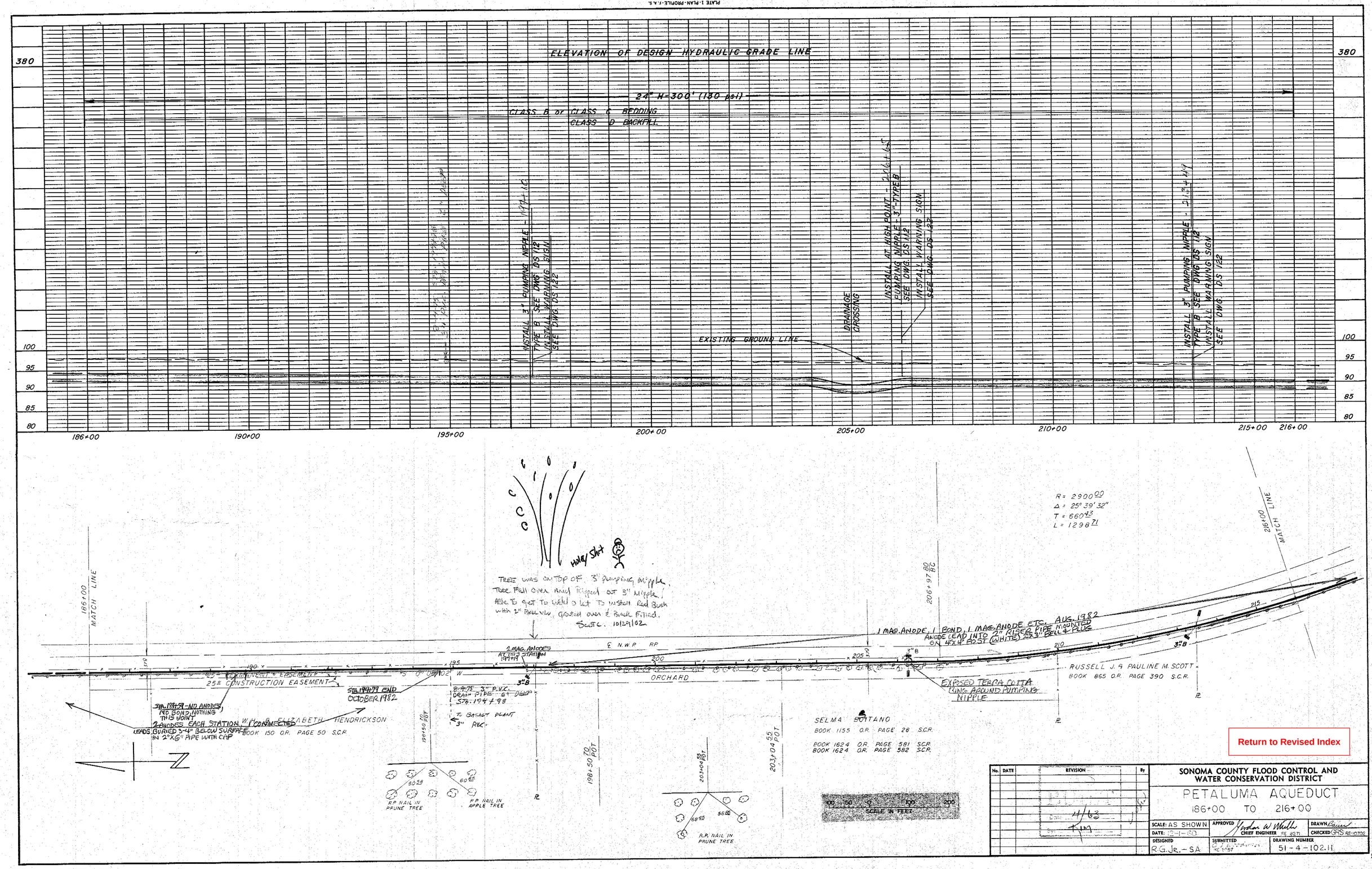

Return to Revised Index

No.	DATE	REVISION	By

SONOMA COUNTY FLOOD CONTROL AND WATER CONSERVATION DISTRICT

PETALUMA AQUEDUCT

186+00 TO 216+00

SCALE: AS SHOWN	APPROVED Gordon W. Wheeler, CHIEF ENGINEER RE 8827	DRAWN Bacon
DATE: 12-1-80		CHECKED GPO RE-10702
DESIGNED R.G.Jr.-S.A.	SUBMITTED RE 6687	DRAWING NUMBER 51-4-102.11

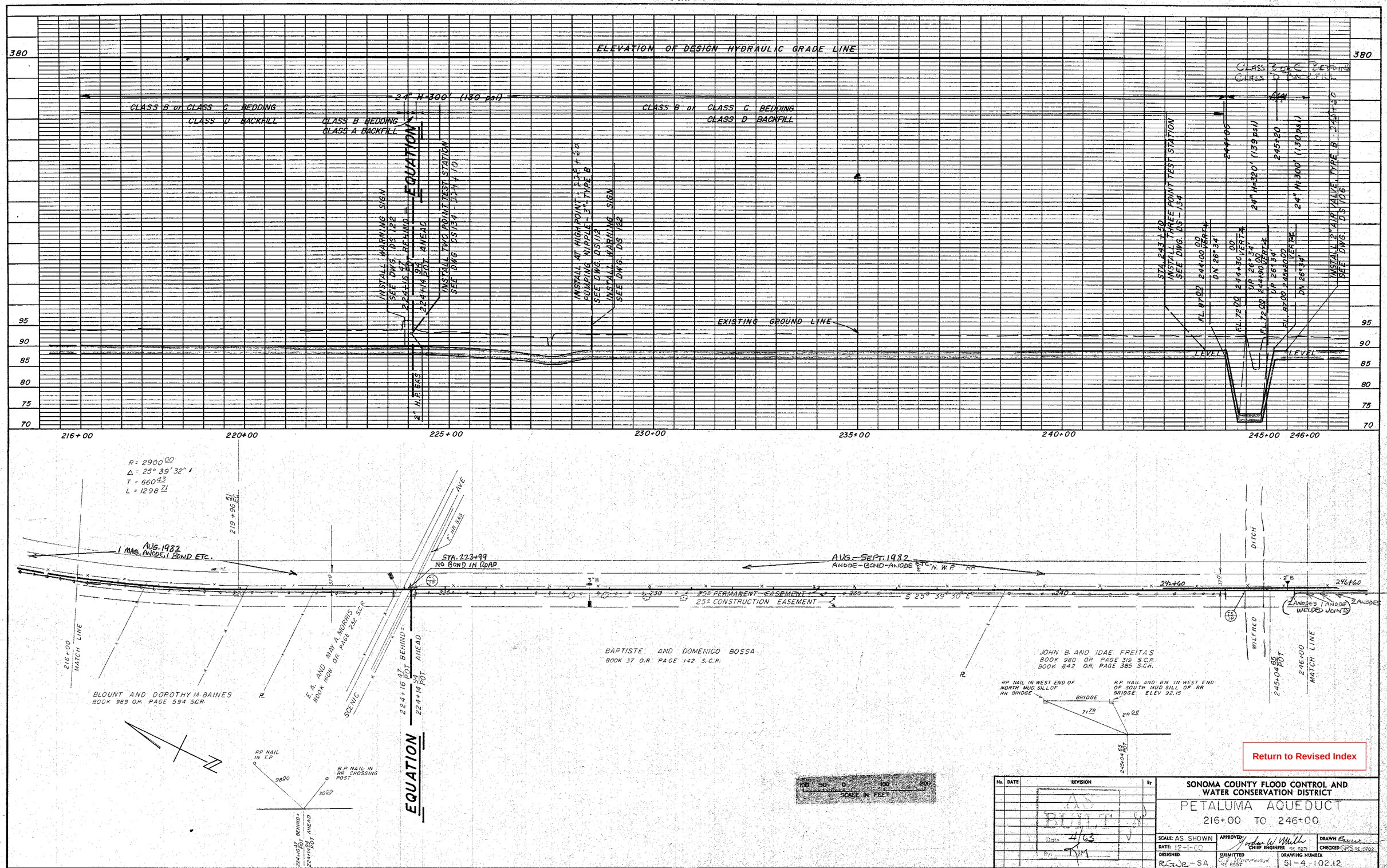

Return to Revised Index

No.	DATE	REVISION	By
		AS BUILT Date 4/63 By:	

SONOMA COUNTY FLOOD CONTROL AND WATER CONSERVATION DISTRICT

PETALUMA AQUEDUCT

216+00 TO 246+00

SCALE: AS SHOWN	APPROVED: Jordan W. Mills, CHIEF ENGINEER RE 8271	DRAWN
DATE: 12-1-60		CHECKED GRS RE 0702
DESIGNED: RGJR-SA	SUBMITTED: C.J. Woodward RE 8557	DRAWING NUMBER: 51-4-102.12

VIEW – A

NTS

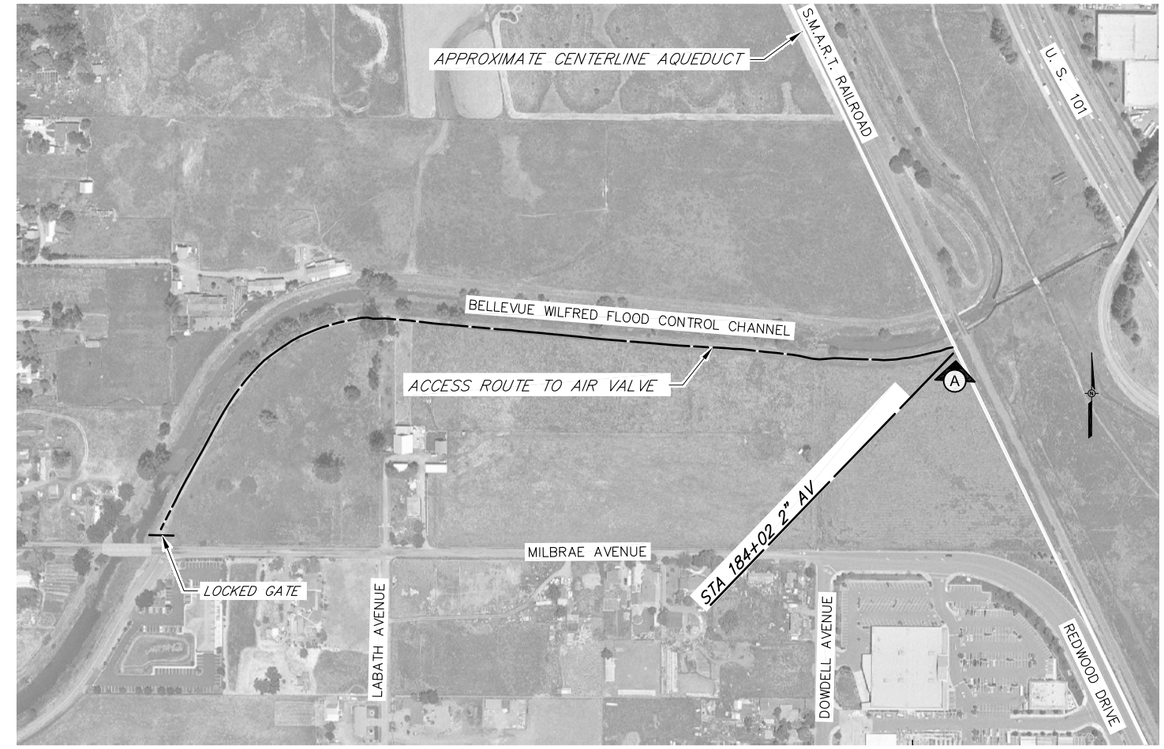

SITE PLAN

SCALE: 1" =200'

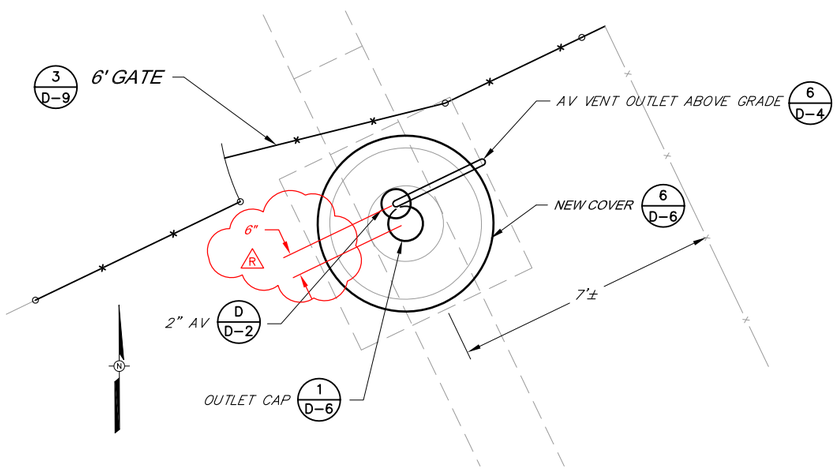

PARTIAL PLAN

NTS

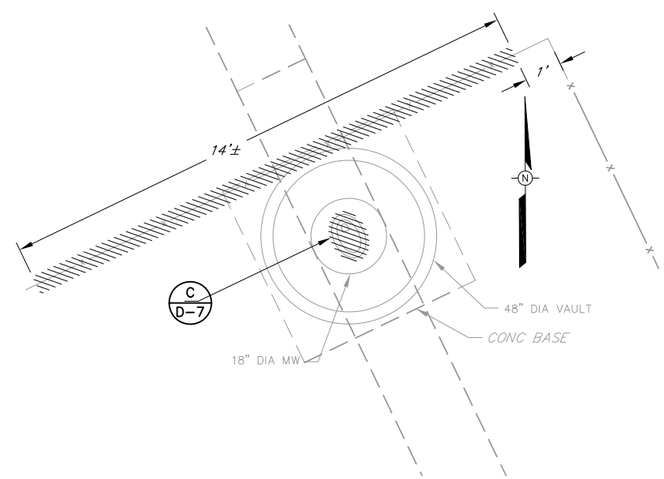

DEMOLITION PLAN

NTS

PROJECT RECORD DRAWING

Prepared by:

Pipeline Excavators
P.O. Box 1755
Sebastopol, Ca 95473

(707) 824–8546

January 28, 2009

Return to Revised Index

NOTE:
APPROXIMATELY 3 FEET OF COVER OVER PIPE

BAR LENGTH ON ORIGINAL DRAWING EQUALS ONE INCH. ADJUST SCALE ACCORDINGLY

REGISTERED PROFESSIONAL ENGINEER DALE P. ROBERTS No. M 029944 Exp. 6/30/08 MECHANICAL STATE OF CALIFORNIA

REGISTERED PROFESSIONAL ENGINEER DALE P. ROBERTS No. C 67949 Exp. 6/30/09 CIVIL STATE OF CALIFORNIA

NO.	DATE	REVISION	BY
	07/25/08	CONFORMED	
R	04–14–09	RECORD DRAWING ACCEPTED BY SCWA	

SONOMA COUNTY WATER AGENCY

SCALE: AS SHOWN
DATE: 28/05/2008
DRAWN: ADF
REVIEWED:

AIR VALVE UPGRADE PROJECT PHASE 1
PETALUMA AQUEDUCT
STA 245+50 SITE PLAN AND DETAILS

FILE NAME: 4078c17–24R.dwg
CONTRACT NUMBER: 60–4–7 #14
DRAWING NUMBER: C–19
SHEET 24 OF 63

\\Sd-data\Proj\water transmission\pipelines\4078_AV-Replacement\4078_record-dwgs\4078c17-24R.dwg

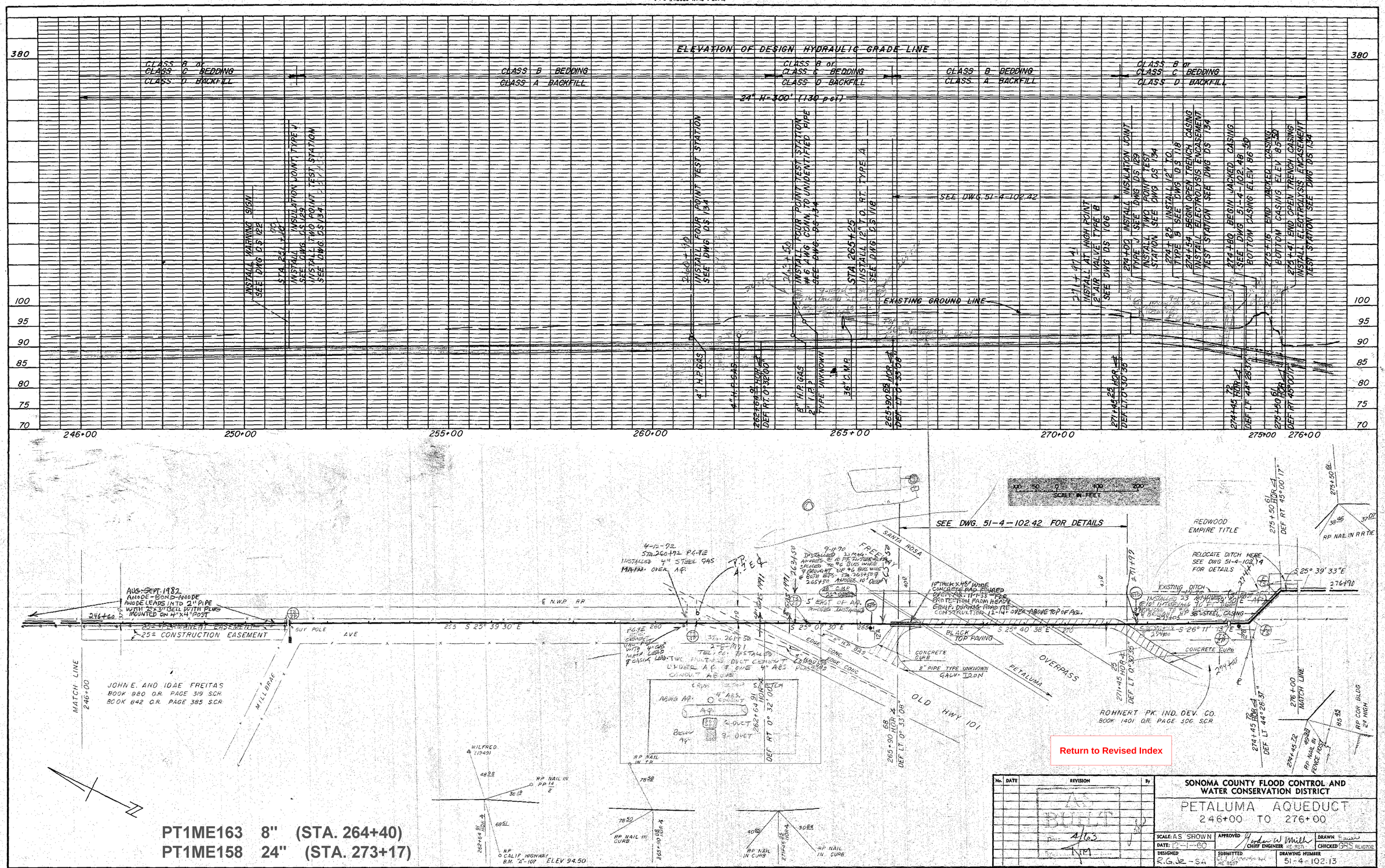
ELEVATION OF DESIGN HYDRAULIC GRADE LINE
CLASS B or CLASS C BEDDING
CLASS D BACKFILL
CLASS B BEDDING
CLASS A BACKFILL
24" H=300' (130 psi)
EXISTING GROUND LINE
SEE DWG. 51-4-102.42
SEE DWG. 51-4-102.42 FOR DETAILS
SCALE IN FEET
REDWOOD EMPIRE TITLE
RELOCATE DITCH HERE SEE DWG 51-4-102.14 FOR DETAILS
AUG-SEPT. 1982 ANODE-BOND-ANODE ANODE LEADS INTO 2" PIPE WITH 2"x3" BELL WITH PLUG MOUNTED ON 4"x4" POST
25° CONSTRUCTION EASEMENT
JOHN E. AND IDAE FREITAS BOOK 980 O.R. PAGE 319 S.C.R. BOOK 842 O.R. PAGE 385 S.C.R.
MATCH LINE 246+00
MILLBRAE
GUY POLE
AVE
℄ N.W.P. RR
SANTA ROSA
FREEWAY
OVERPASS
PETALUMA
OLD HWY 101
BLACK TOP PAVING
CONCRETE CURB
2" PIPE TYPE UNKNOWN GALV. IRON
ROHNERT PK. IND. DEV. CO. BOOK 1401 O.R. PAGE 306 S.C.R.
MATCH LINE 276+00
RP NAIL IN RR TIE
RP COR BLDG 2' HIGH
RP NAIL IN FENCE POST
WILFRED (1949)
RP NAIL IN PP 14/2
RP CALIF HIGHWAY B.M. "A"-107 ELEV 94.50
RP NAIL IN CURB
RP NAIL IN TP
PT1ME163 8" (STA. 264+40)
PT1ME158 24" (STA. 273+17)
Return to Revised Index
SONOMA COUNTY FLOOD CONTROL AND WATER CONSERVATION DISTRICT
PETALUMA AQUEDUCT
246+00 TO 276+00
SCALE: AS SHOWN
DATE: 12-1-60
DESIGNED R.G.Jr.-SA
APPROVED CHIEF ENGINEER
DRAWN
CHECKED GRS
SUBMITTED
DRAWING NUMBER 51-4-102.13
REVISION
AS BUILT
Date 4/63

VIEW – A

NTS

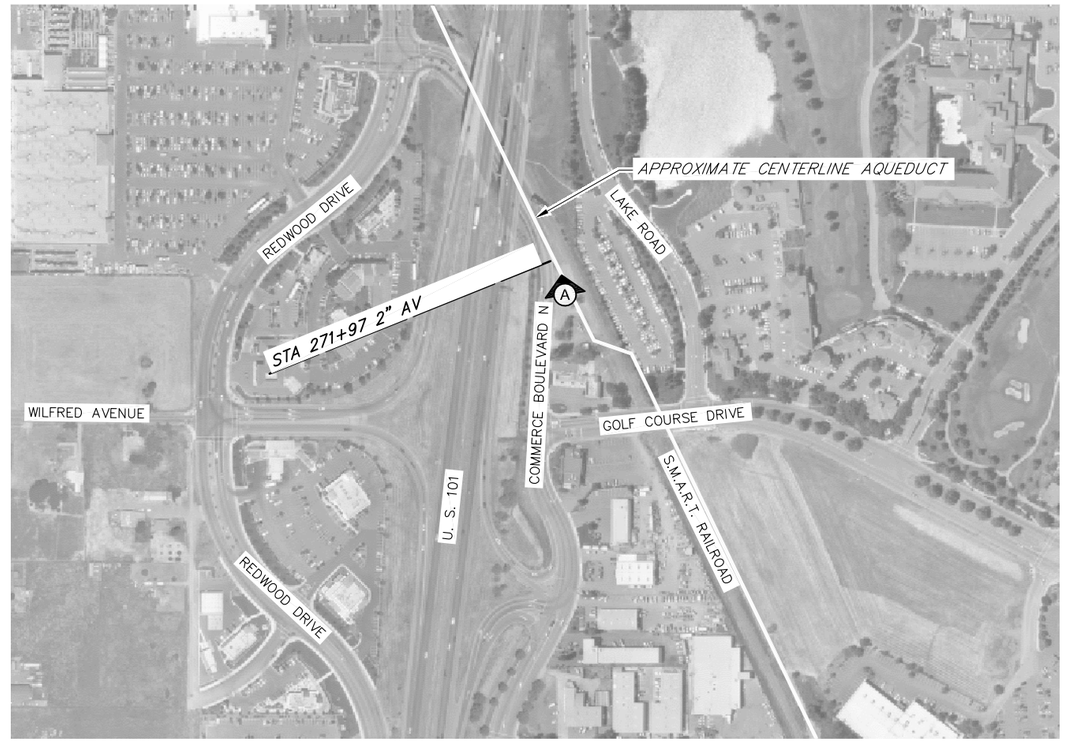

SITE PLAN

SCALE: 1" =200'

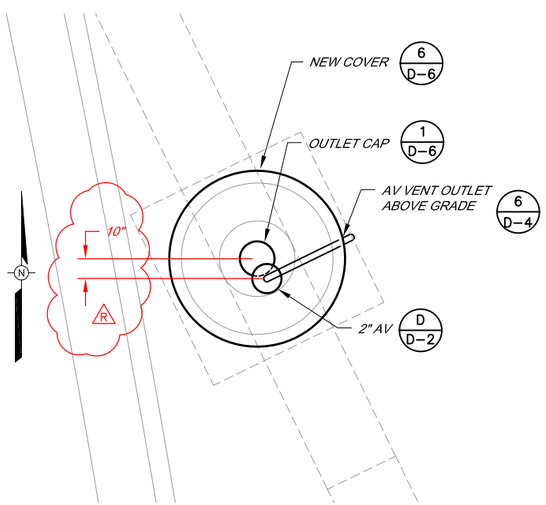

PARTIAL PLAN

NTS

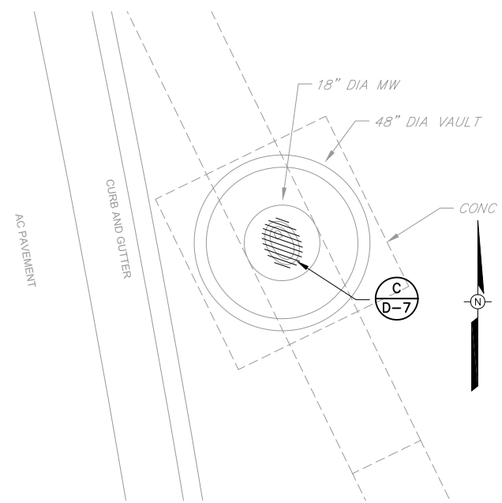

DEMOLITION PLAN PLAN

NTS

PROJECT RECORD DRAWING

Prepared by:

Pipeline Excavators
P.O. Box 1755
Sebastopol, Ca 95473

(707) 824–8546

January 28, 2009

Return to Revised Index

R NOTE:
APPROXIMATELY 3 FEET OF COVER OVER PIPE
2'-6" FG TO TOP OF FLANGE

REGISTERED PROFESSIONAL ENGINEER
DALE P. ROBERTS
No. M 029944
Exp. 6/30/08
MECHANICAL
STATE OF CALIFORNIA

REGISTERED PROFESSIONAL ENGINEER
DALE P. ROBERTS
No. C 67949
Exp. 6/30/09
CIVIL
STATE OF CALIFORNIA

BAR LENGTH ON ORIGINAL DRAWING EQUALS ONE INCH, ADJUST SCALE ACCORDINGLY

NO.	DATE	REVISION	BY
	07/25/08	CONFORMED	
R	04–14–09	RECORD DRAWING ACCEPTED BY SCWA	

SONOMA COUNTY WATER AGENCY

SCALE : AS SHOWN
DATE : 28/05/2008
DRAWN : ADF
REVIEWED

AIR VALVE UPGRADE PROJECT PHASE 1
PETALUMA AQUEDUCT
STA 271+97 SITE PLAN AND DETAILS

FILE NAME: 4078c17–24R.dwg
CONTRACT NUMBER: 60–4–7 #14
DRAWING NUMBER: C–20
SHEET 25 OF 63

\\Sd-data\Proj\water transmission\pipelines\4078_AV-Replacement\4078_record-dwgs\4078c17-24R.dwg

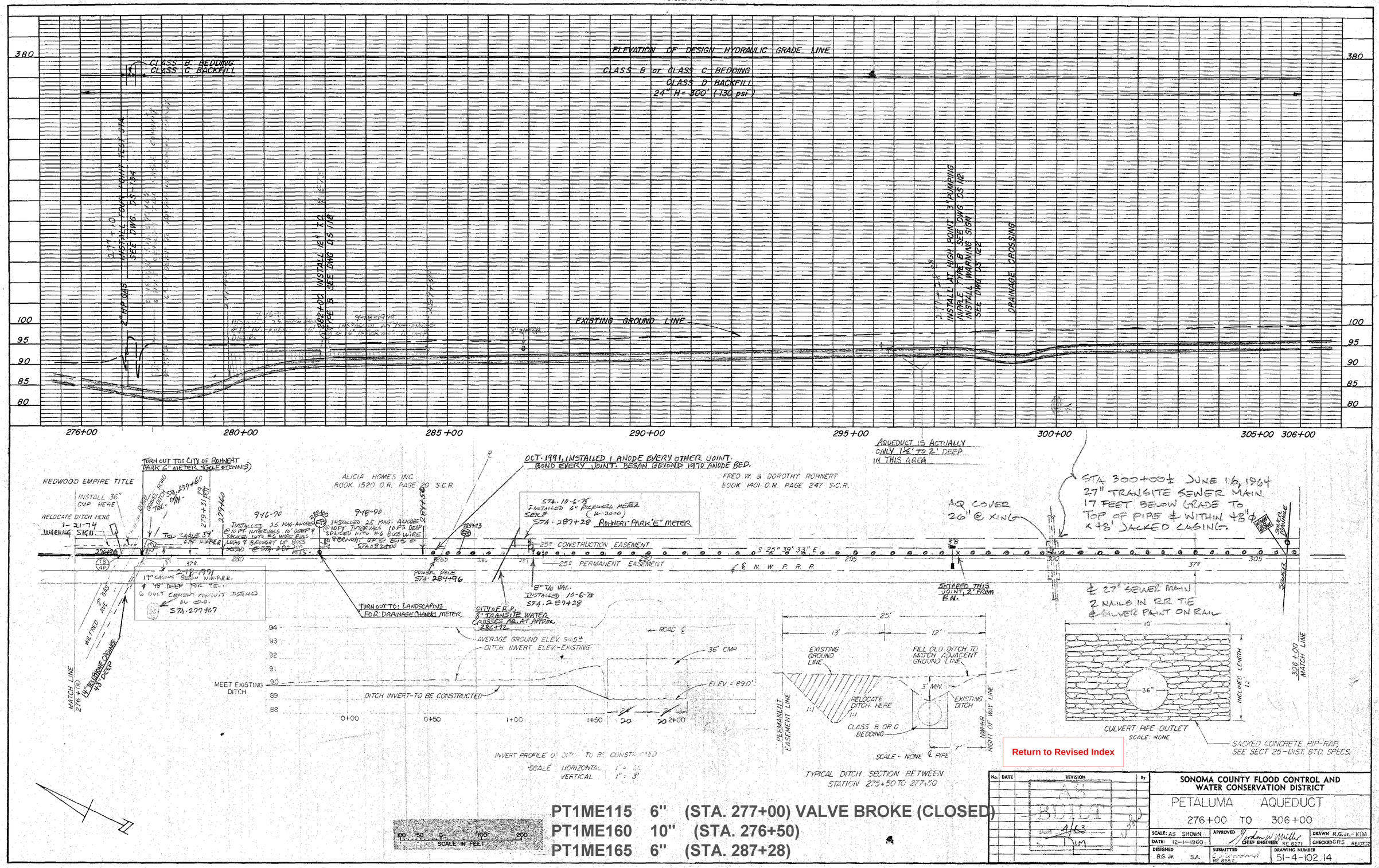

Return to Revised Index

PLATE 1-PLAN-PROFILE-F.A.S.
CLEARPRINT PAPER CO. S.F. CAL.
No. 1000H-1

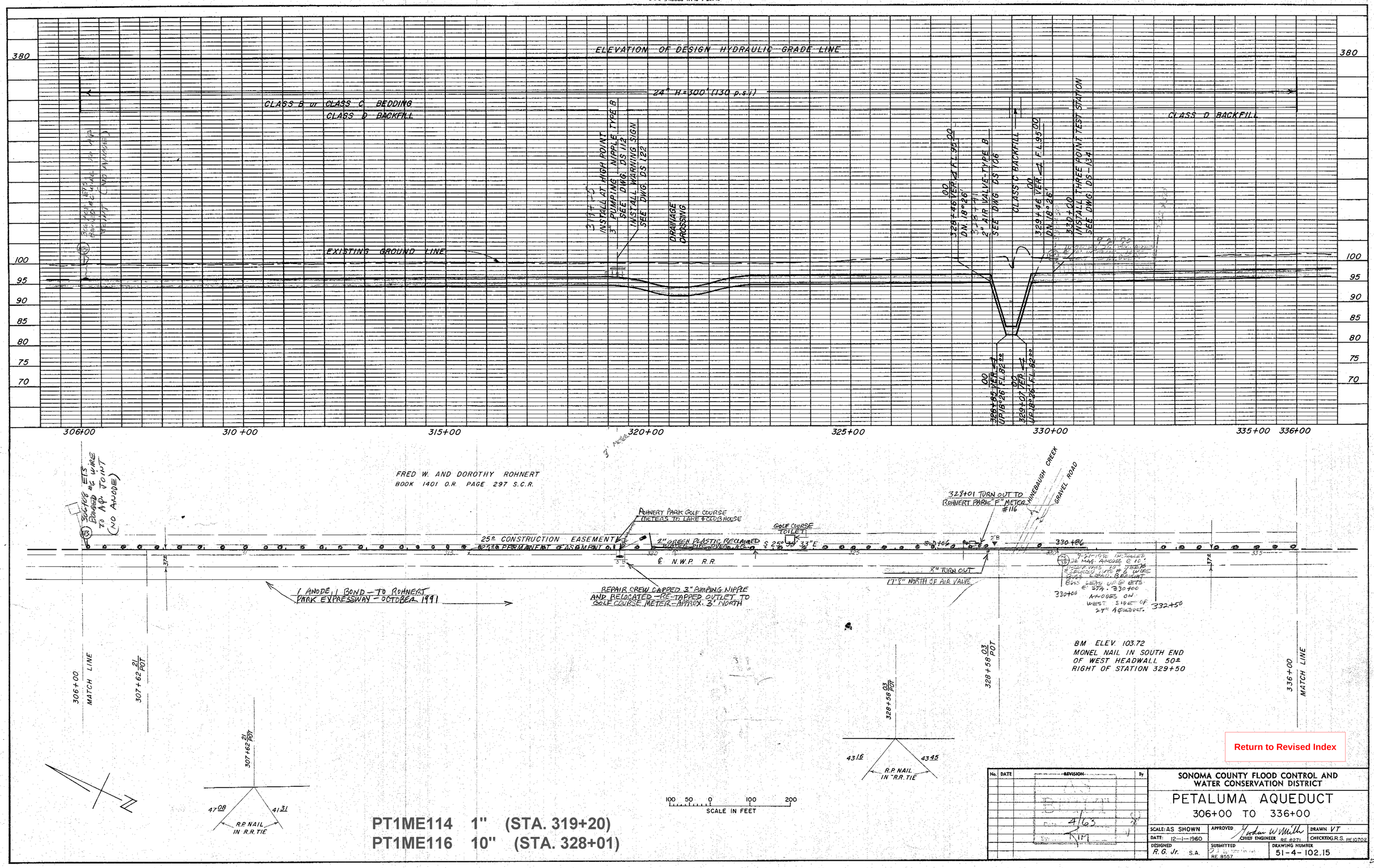

PT1ME114 1" (STA. 319+20)
PT1ME116 10" (STA. 328+01)

No.	DATE	REVISION	By

SONOMA COUNTY FLOOD CONTROL AND WATER CONSERVATION DISTRICT

PETALUMA AQUEDUCT

306+00 TO 336+00

SCALE: AS SHOWN	APPROVED Jordan W. Smith CHIEF ENGINEER RE 8271	DRAWN VT
DATE: 12-1-1960		CHECKED G.R.S. RE 10702
DESIGNED R.G. Jr. S.A.	SUBMITTED RE 8557	DRAWING NUMBER 51-4-102.15

Return to Revised Index

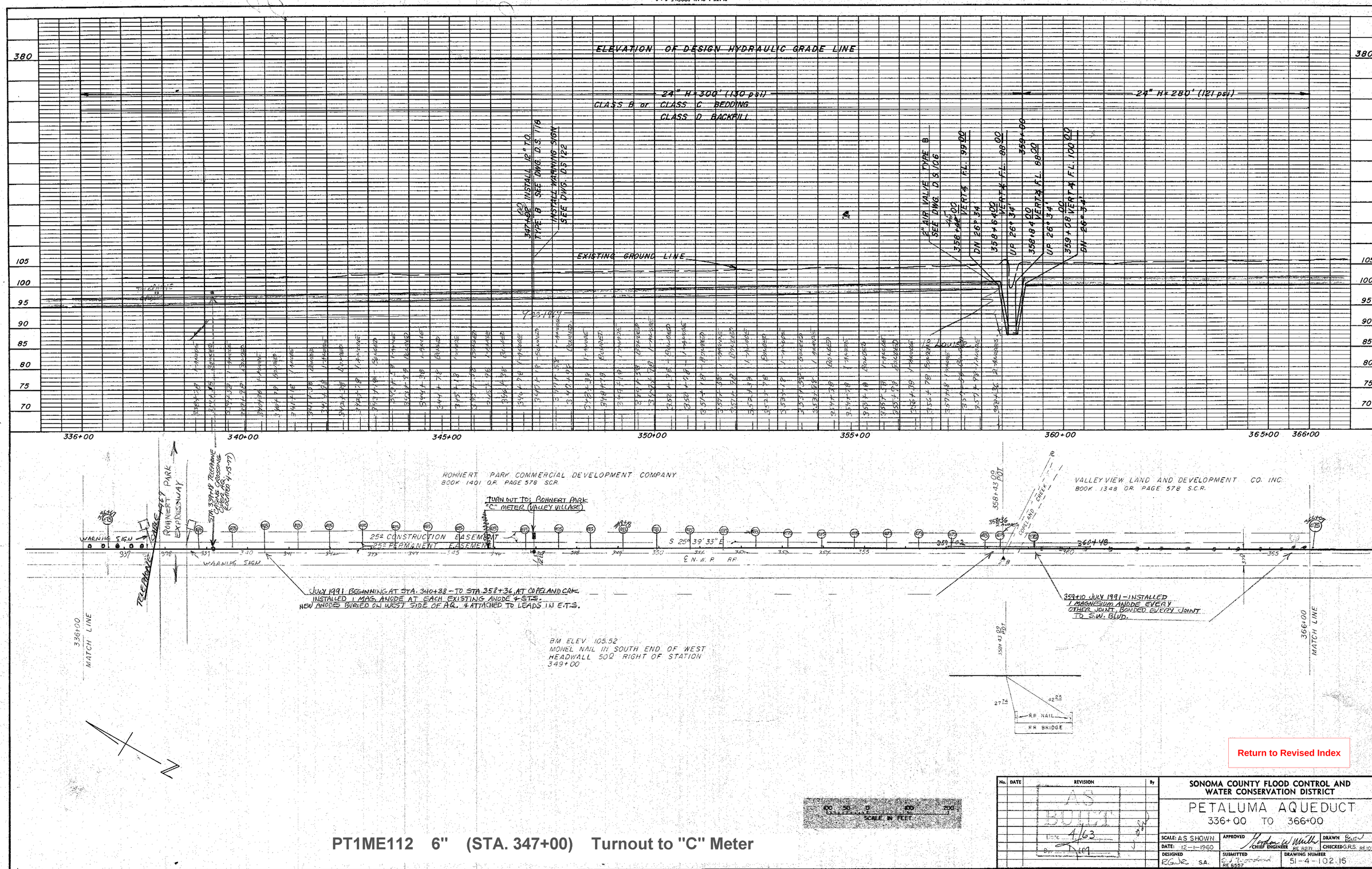

Return to Revised Index

PT1ME112 6" (STA. 347+00) Turnout to "C" Meter

No.	DATE	REVISION	By
		AS BUILT Date 4/63	

SONOMA COUNTY FLOOD CONTROL AND WATER CONSERVATION DISTRICT

PETALUMA AQUEDUCT
336+00 TO 366+00

SCALE: AS SHOWN	APPROVED Gordon W. Mills CHIEF ENGINEER RE 8271	DRAWN
DATE: 12-1-1960		CHECKED G.R.S. RE 10702
DESIGNED RGJR S.A.	SUBMITTED RE 8557	DRAWING NUMBER 51-4-102.16

VIEW – A

NTS

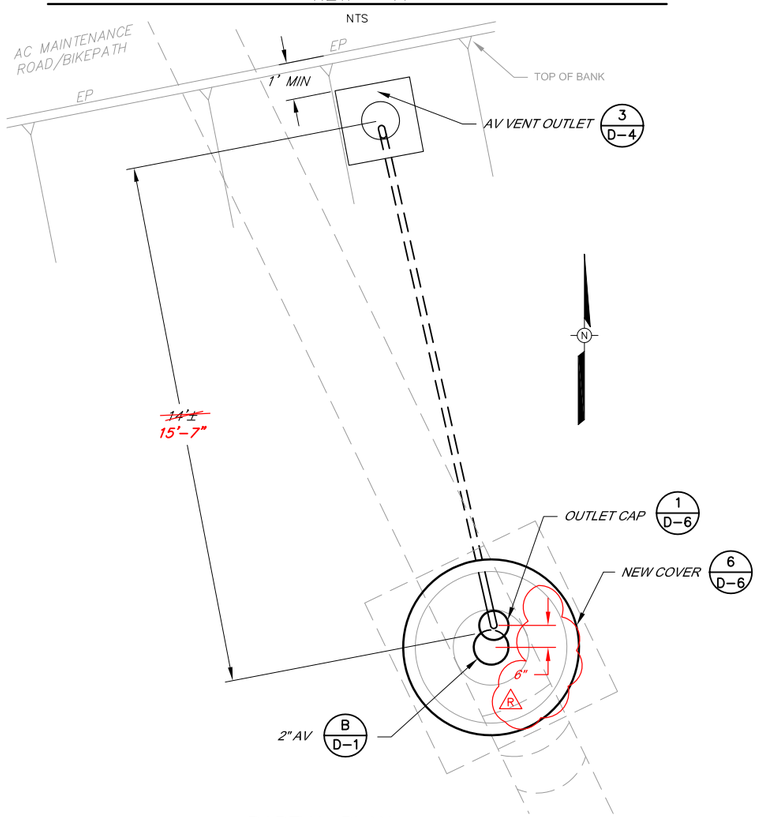

PARTIAL PLAN

NTS

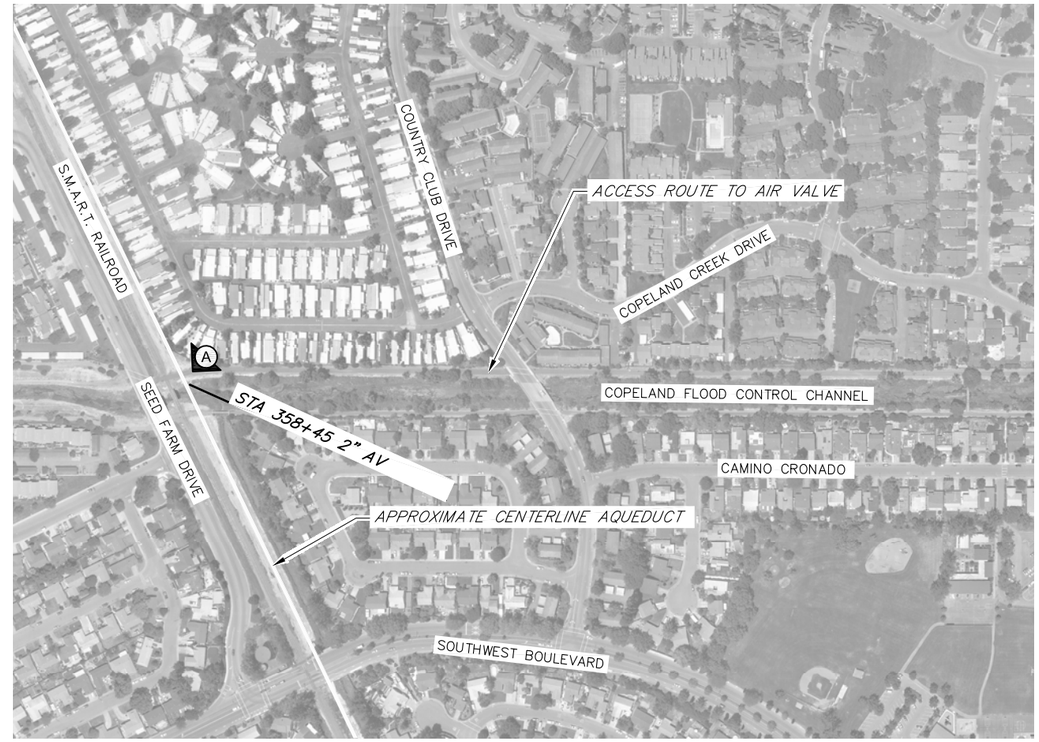

SITE PLAN

SCALE: 1" =200'

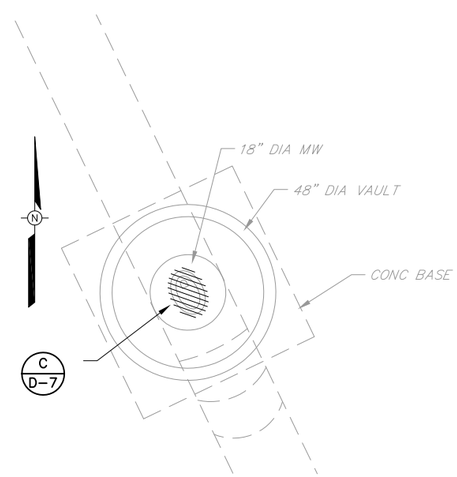

DEMOLITION PLAN PLAN

NTS

PROJECT RECORD DRAWING

Prepared by:

Pipeline Excavators
P.O. Box 1755
Sebastopol, Ca 95473

(707) 824–8546

January 28, 2009

NOTE: 1 6.6 FEET TOP OF MW TO LID
~~APPROXIMATELY 5 FEET OF COVER OVER PIPE~~
R ~~4'-6" FG TO TOP OF FLANGE~~

Return to Revised Index

BAR LENGTH ON ORIGINAL DRAWING EQUALS ONE INCH. ADJUST SCALE ACCORDINGLY

REGISTERED PROFESSIONAL ENGINEER DALE P. ROBERTS No. M 029944 Exp. 6/30/08 MECHANICAL STATE OF CALIFORNIA

REGISTERED PROFESSIONAL ENGINEER DALE P. ROBERTS No. C 67949 Exp. 6/30/09 CIVIL STATE OF CALIFORNIA

NO.	DATE	REVISION	BY
	07/25/08	CONFORMED	
R	04–14–09	RECORD DRAWING ACCEPTED BY SCWA	
1	05–05–09	AQUEDUCT DEPTH CORRECTION	

SONOMA COUNTY WATER AGENCY

SCALE : AS SHOWN
DATE : 28/05/2008
DRAWN : ADF
REVIEWED :

AIR VALVE UPGRADE PROJECT PHASE 1
PETALUMA AQUEDUCT
STA 358+45 SITE PLAN AND DETAILS

FILE NAME: 4078c17–24R.dwg
CONTRACT NUMBER: 60–4–7 #14
DRAWING NUMBER: C–21
SHEET 26 OF 63

\\SD-DATA\Proj\water transmission\pipelines\4078_AV-Replacement\4078_record-dwgs\4078c17-24R.dwg

PLATE 1-PLAN-PROFILE-F.A.S.
CLEARPRINT PAPER CO. S.F. CAL.
No. 1000H-1.

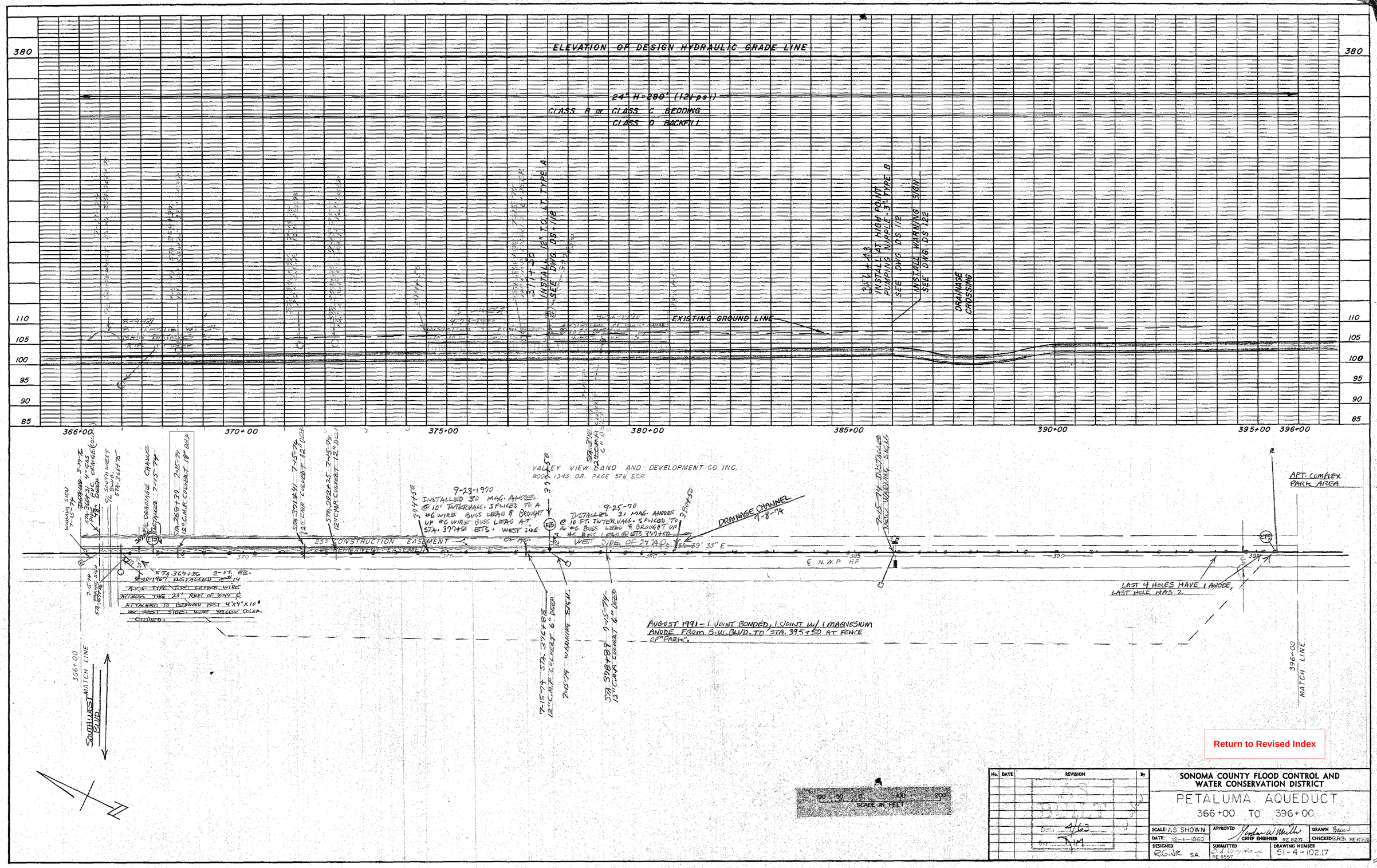

Return to Revised Index

No.	DATE	REVISION	By

SONOMA COUNTY FLOOD CONTROL AND WATER CONSERVATION DISTRICT

PETALUMA AQUEDUCT
366+00 TO 396+00

SCALE: AS SHOWN	APPROVED		DRAWN
DATE: 12-1-1960	CHIEF ENGINEER RE 8271		CHECKED G.R.S. RE 8272
DESIGNED RG.NR. S.A.	SUBMITTED RE 8557		DRAWING NUMBER 51-4-102.17

PLATE 1-PLAN-PROFILE-F.A.S.
CLEARPRINT PAPER CO. S.F. CAL.
No. 1000H-1

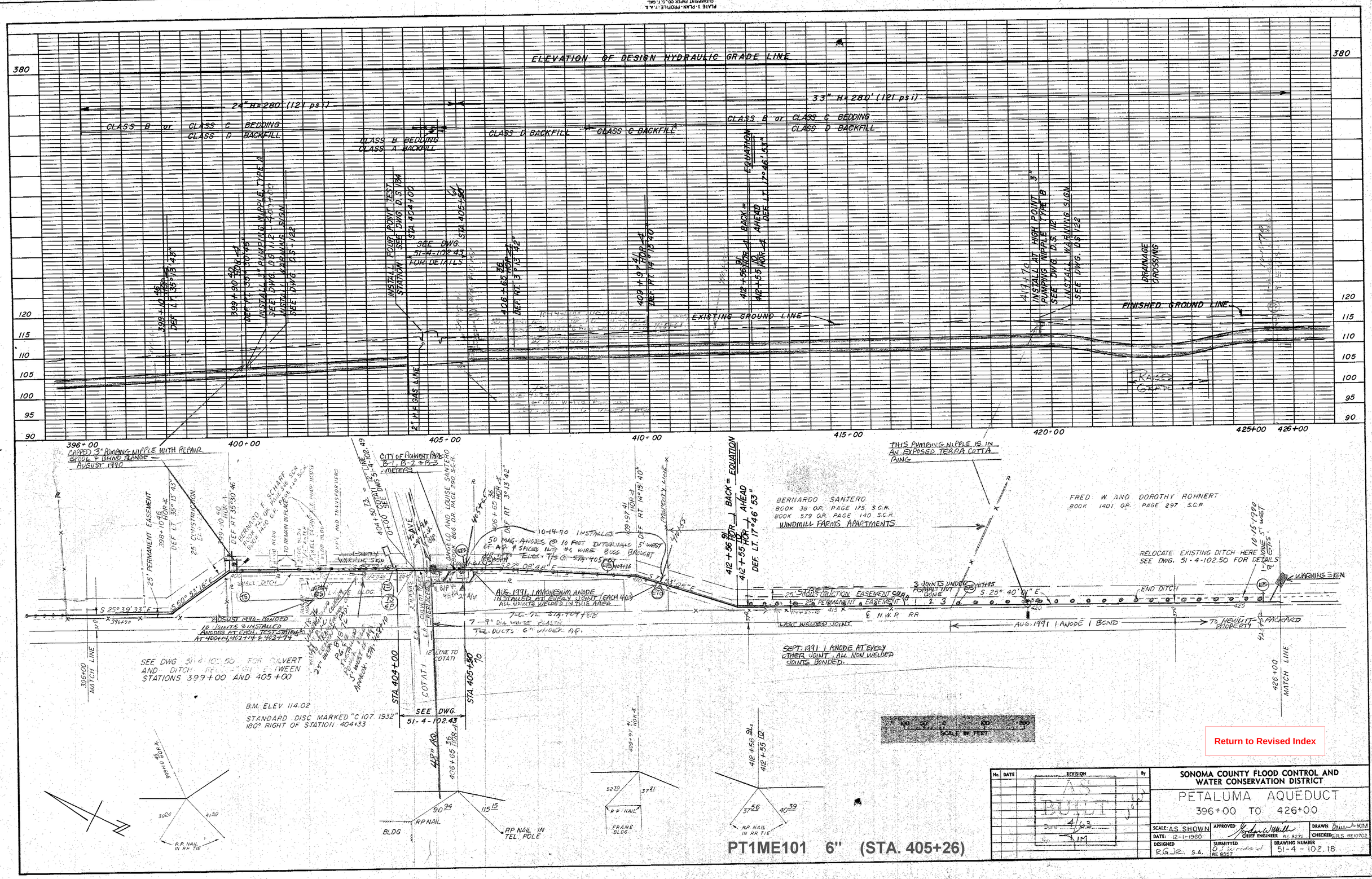

No.	DATE	REVISION	By
		AS BUILT Date 4/63 By KIM	

SONOMA COUNTY FLOOD CONTROL AND WATER CONSERVATION DISTRICT

PETALUMA AQUEDUCT

396+00 TO 426+00

SCALE: AS SHOWN	APPROVED: Jordan W. Hill, CHIEF ENGINEER RE 8271		DRAWN: KIM
DATE: 12-1-1960			CHECKED: R.R.S. RE10702
DESIGNED: R.G.R. S.A.	SUBMITTED: O. Lindsdal RE 8557		DRAWING NUMBER: 51-4-102.18

Return to Revised Index

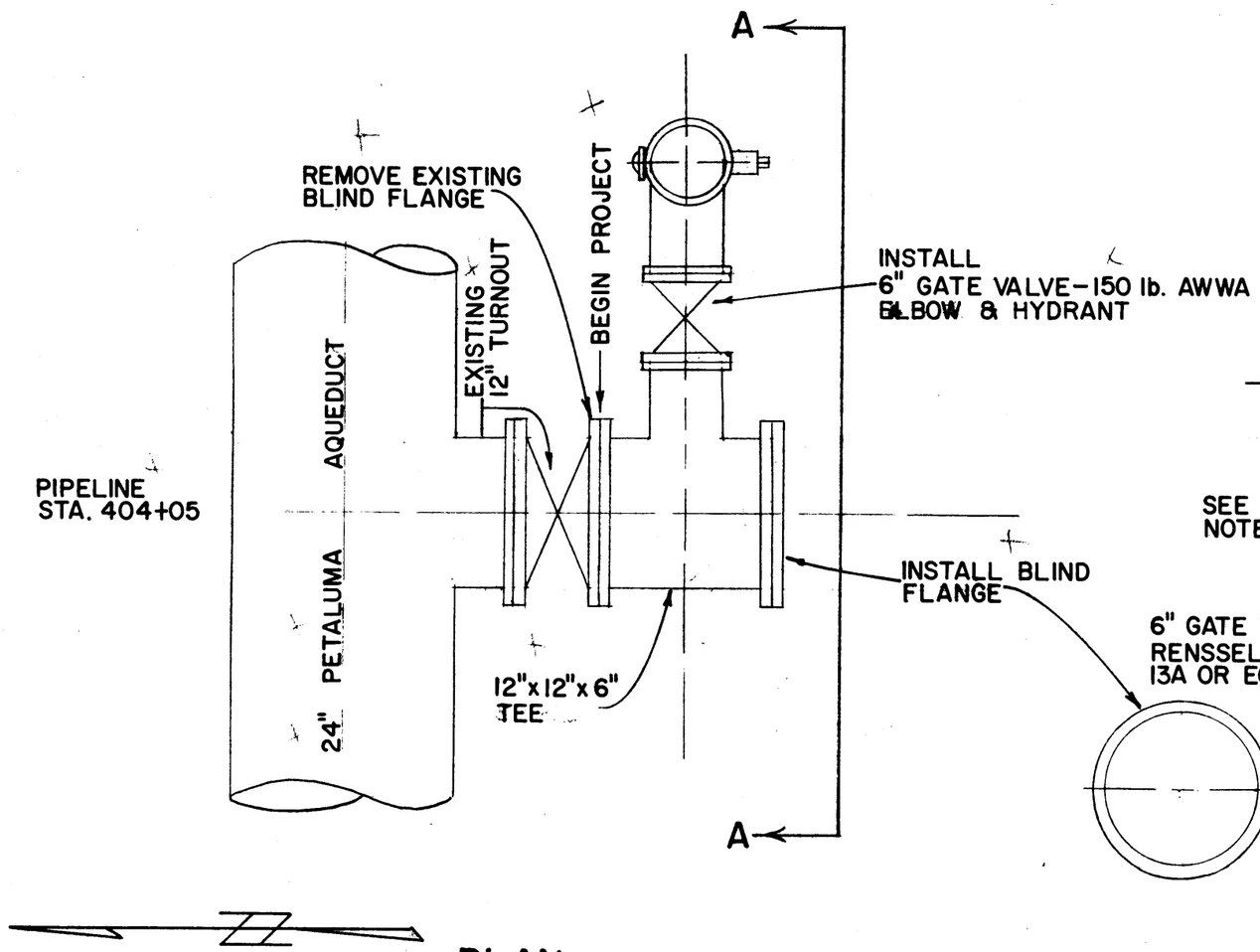

PLAN

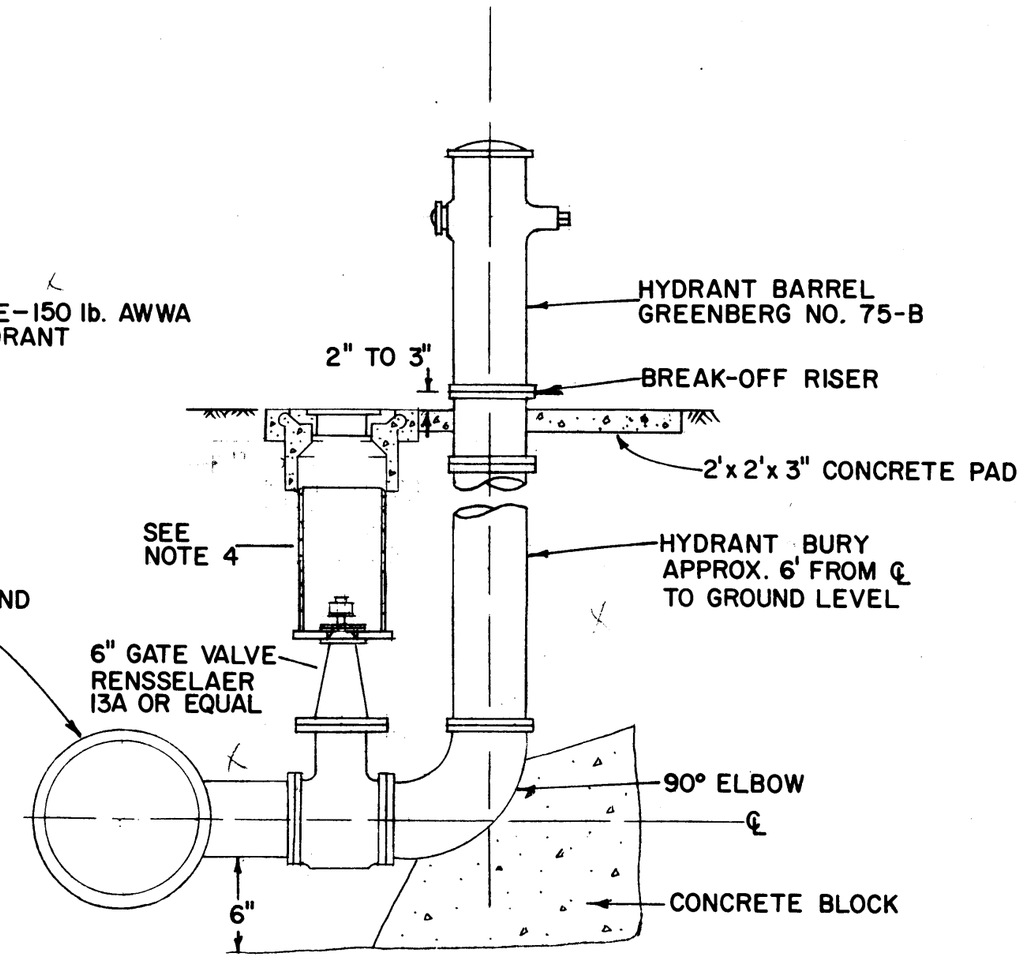

SECTION A-A

Return to Revised Index

NOTE – ALL FLANGES AND CONNECTIONS TO BE INSPECTED UNDER STATIC HEAD BEFORE BACKFILLING.

NOTES

1. ALL BURIED PIPING TO BE COATED WITH CEMENT MORTAR 1" THICK.
2. BURIED GATE VALVE TO BE WRAPPED WITH STUCCO NETTING AND PLASTER WITH 1:3 MIX 1" THICK.
3. 6" PIPE & FITTINGS, SCHEDULE 40 STEEL OR CLASS 150 CAST IRON.
4. 6" GATE VALVE AND VALVE BOX, NO. 161 TRAFFIC VALVE BOX WITH CAST IRON COVER AND EXTENSION, GEORGE P. FORNI, INC., OR APPROVED EQUAL, SET IN 24"x24"x6" CONCRETE COLLAR AT GROUND LEVEL.
5. CLASS C BEDDING AND BACKFILL PER DWG. DS-114.

No.	DATE	REVISION	By

FIRE HYDRANT INSTALLATION RALSTON-PURINA FEED MILL NEAR COTATI AVENUE

SCALE: NONE	APPROVED Gordon W Miller CHIEF ENGINEER RE 8271	DRAWN RJM SKMc
DATE: 2/9/1962		

SONOMA COUNTY FLOOD CONTROL AND WATER CONSERVATION DISTRICT

DESIGNED	CHECKED	DRAWING NUMBER
GRS RE 10702	OLW RE 8557	51-2-102.1

PRINTED ON DIEPO NO. 1000H CLEARPRINT

MICROFILMED PH4-11

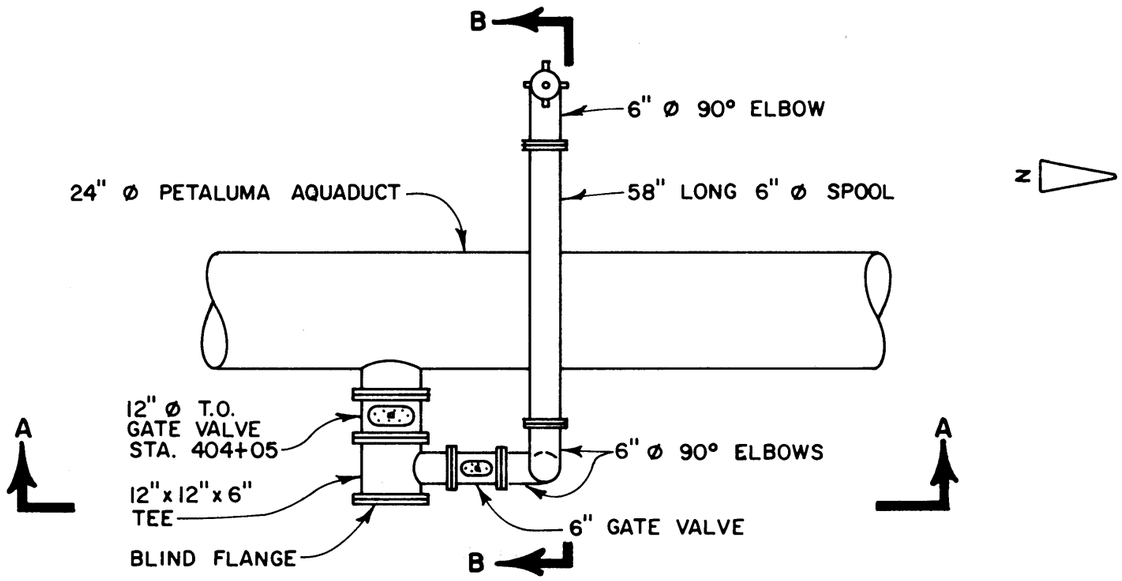

PLAN VIEW

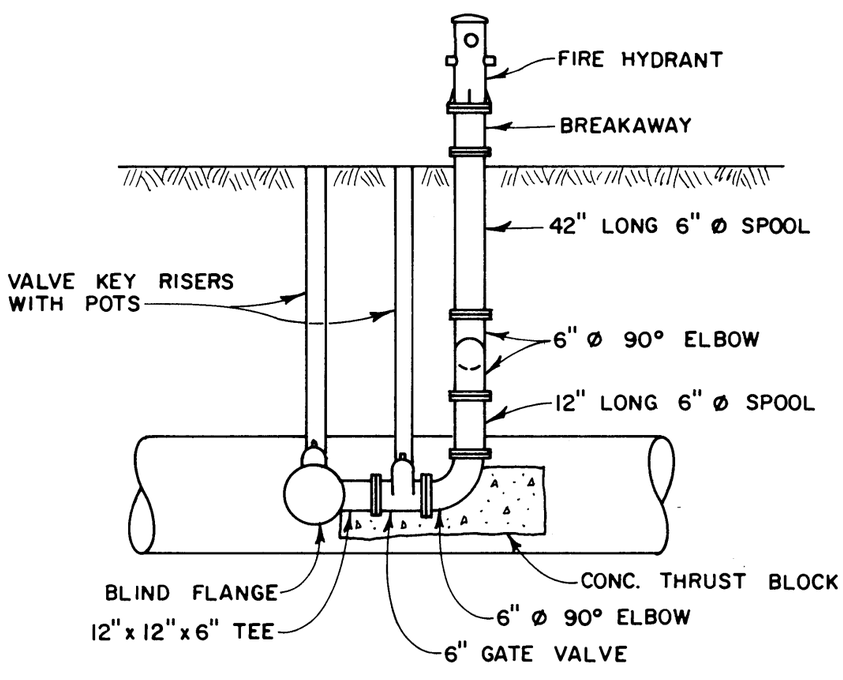

SECTION A-A

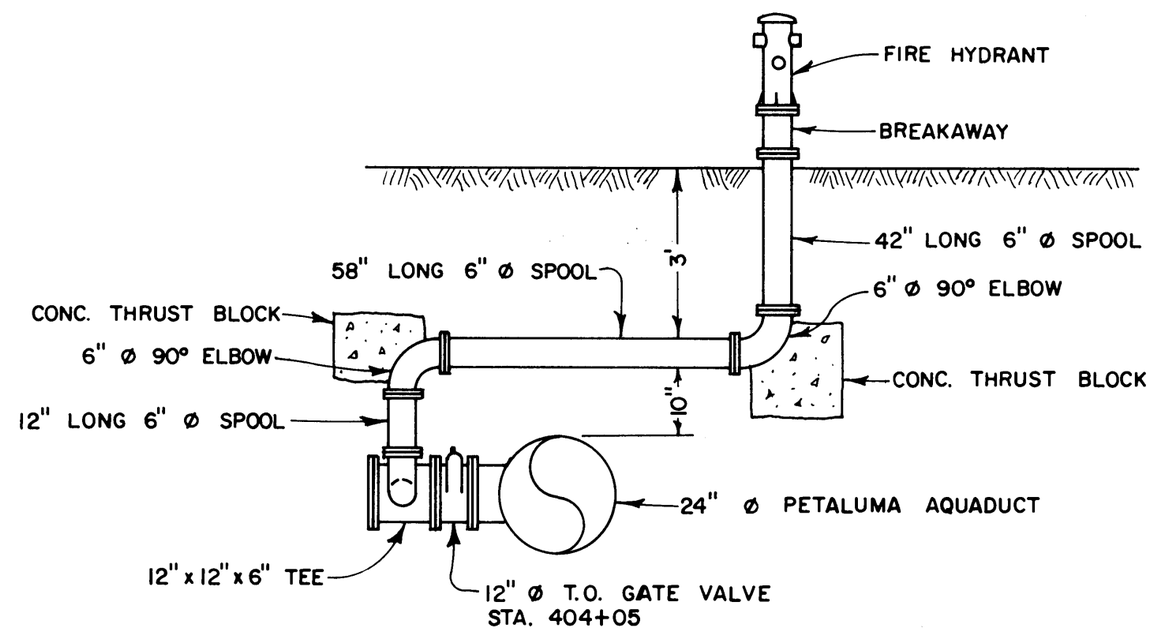

SECTION B-B

Return to Revised Index

No.	DATE	REVISION	By

PETALUMA AQUEDUCT
FIRE HYDRANT RELOCATION
STA. 404+05

SCALE: NONE | APPROVED | DRAWN R.D.
DATE: | CHIEF ENGINEER | CHECKED

SONOMA COUNTY WATER AGENCY

DESIGNED | SUBMITTED | DRAWING NUMBER 51-2-102.4

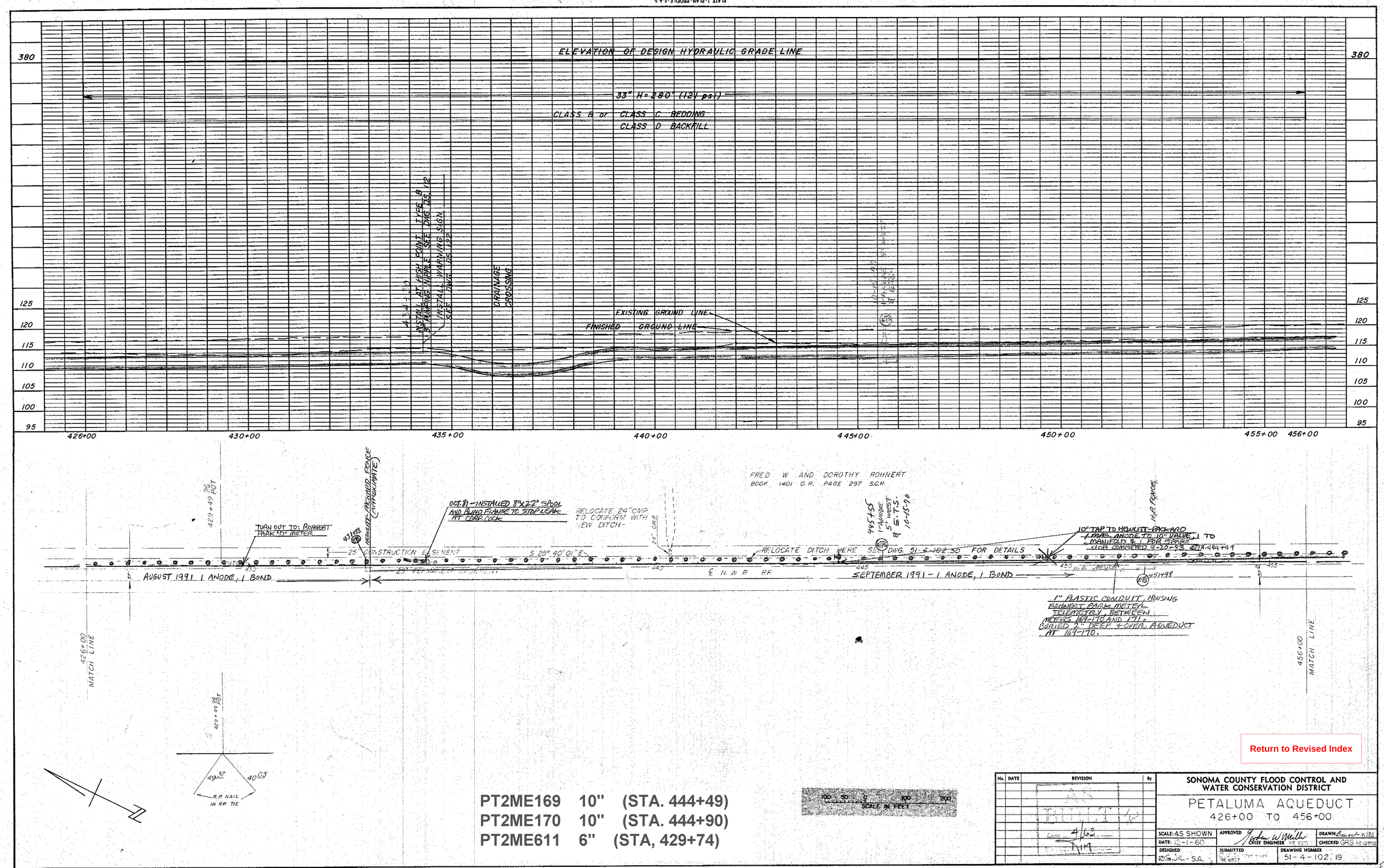

PT2ME169 10" (STA. 444+49)
PT2ME170 10" (STA. 444+90)
PT2ME611 6" (STA, 429+74)

Return to Revised Index

No.	DATE	REVISION	By
		AS BUILT	

SONOMA COUNTY FLOOD CONTROL AND WATER CONSERVATION DISTRICT

PETALUMA AQUEDUCT
426+00 TO 456+00

SCALE: AS SHOWN
DATE: 12-1-60
DESIGNED: RG.JR.-S.A.
APPROVED: CHIEF ENGINEER
SUBMITTED
DRAWN: KIM
CHECKED: GRS
DRAWING NUMBER: 51-4-102.19

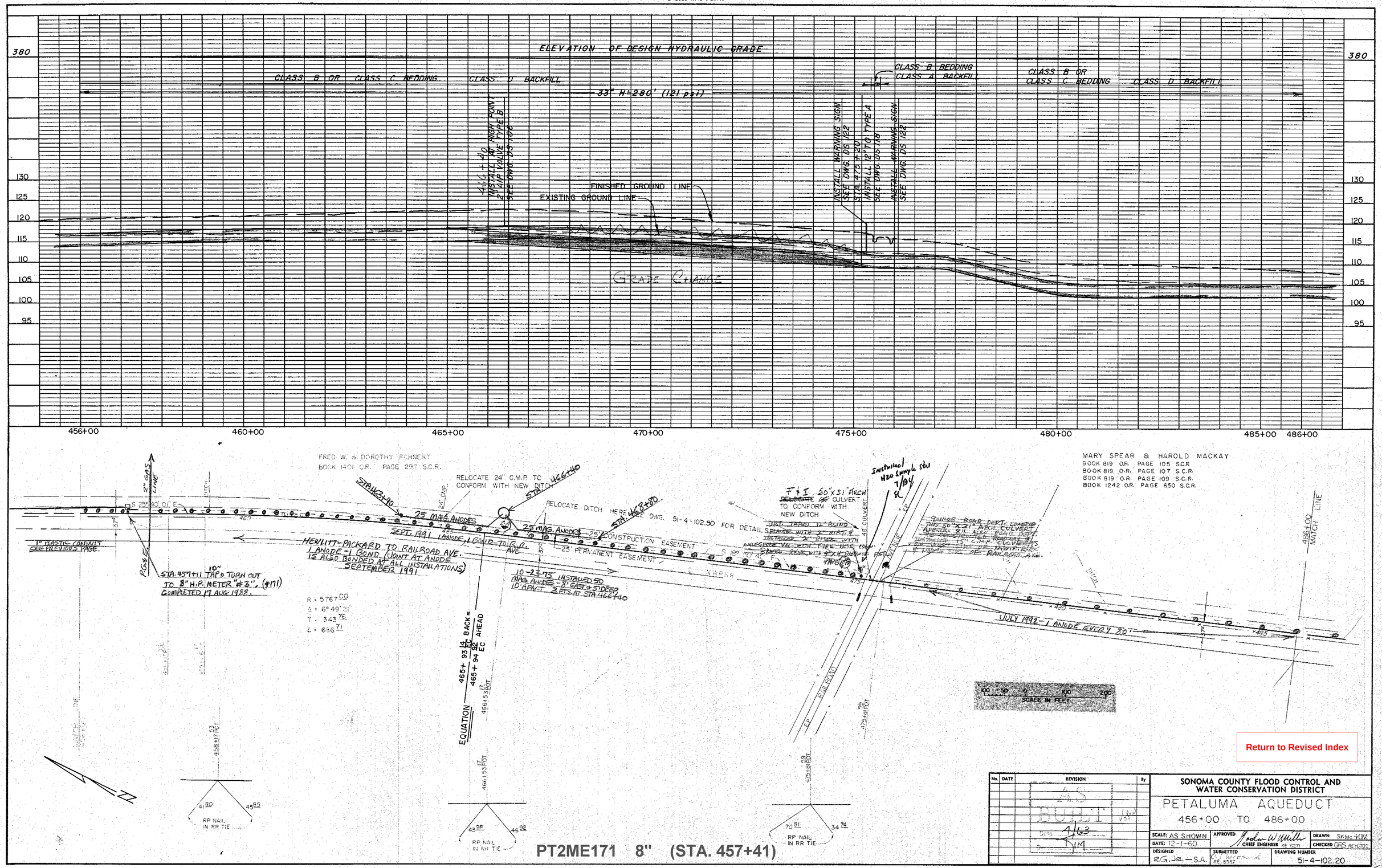

Return to Revised Index

No.	DATE	REVISION	By
		AS BUILT	

SONOMA COUNTY FLOOD CONTROL AND WATER CONSERVATION DISTRICT

PETALUMA AQUEDUCT

456+00 TO 486+00

SCALE: AS SHOWN	APPROVED: Jordan W. Miller, CHIEF ENGINEER RE 8271	DRAWN: SKMc-KIM
DATE: 12-1-60		CHECKED: GRS RE 10702
DESIGNED: R.G. JR. - S.A.	SUBMITTED: RE 8357	DRAWING NUMBER: 51-4-102.20

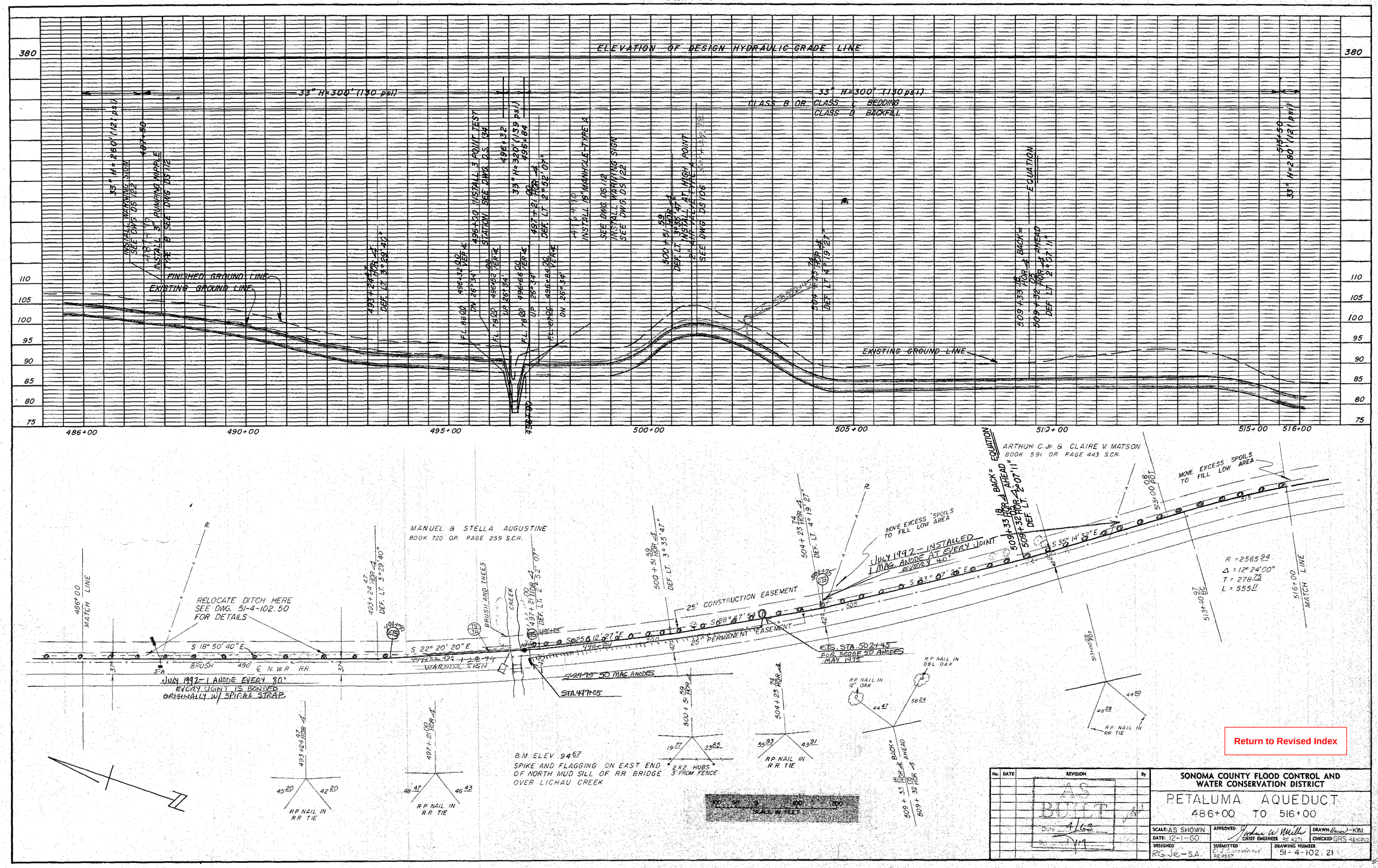

Return to Revised Index

No.	DATE	REVISION	By
		AS BUILT Date 4/63	

SONOMA COUNTY FLOOD CONTROL AND WATER CONSERVATION DISTRICT

PETALUMA AQUEDUCT
486+00 TO 516+00

SCALE: AS SHOWN	APPROVED: CHIEF ENGINEER RE 6271	DRAWN: KIM
DATE: 12-1-60		CHECKED: GRS RE 10702
DESIGNED: R.G. Jr. - S.A.	SUBMITTED: RE 8557	DRAWING NUMBER: 51-4-102.21

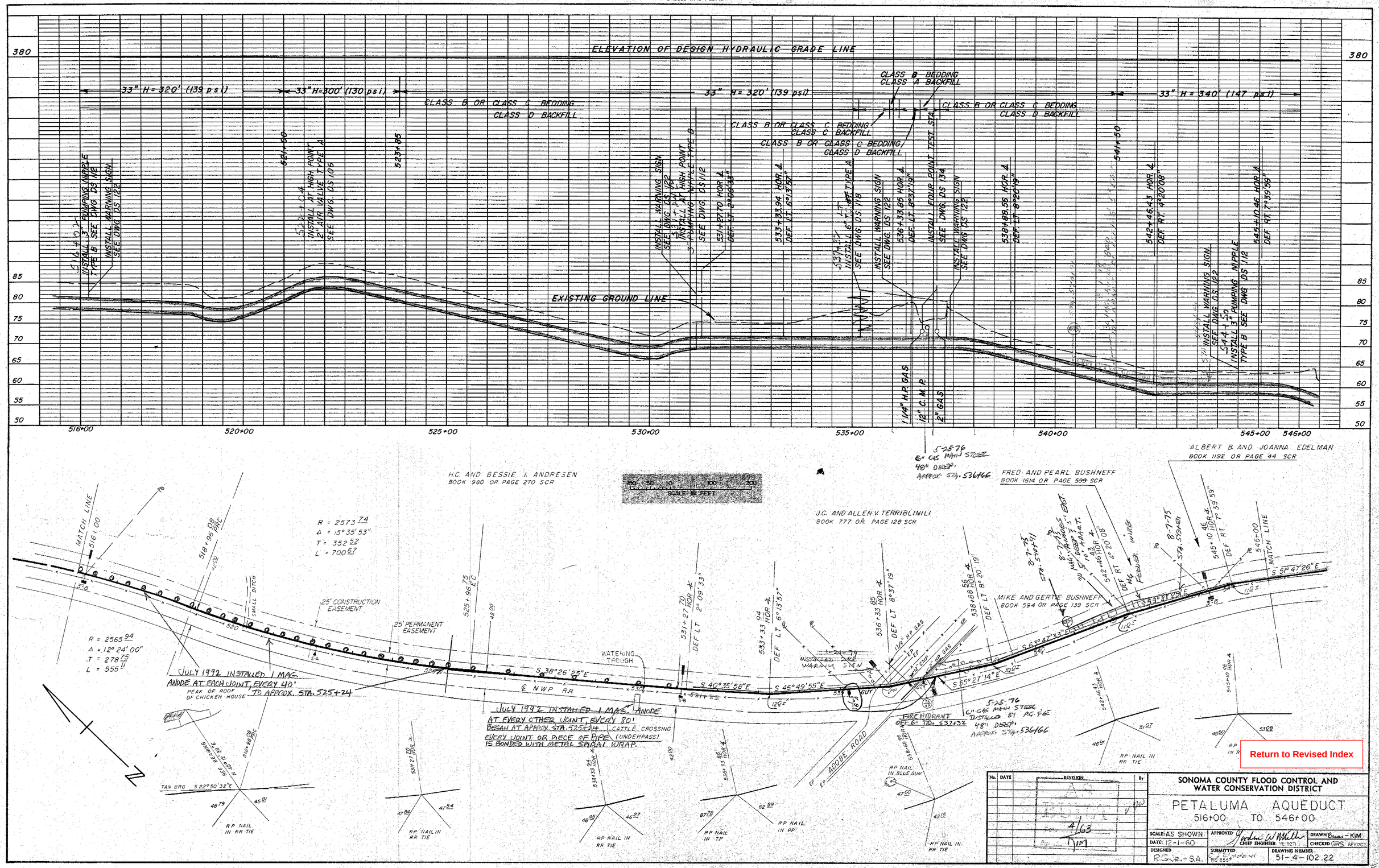

Return to Revised Index

No.	DATE	REVISION	By

SONOMA COUNTY FLOOD CONTROL AND WATER CONSERVATION DISTRICT

PETALUMA AQUEDUCT
516+00 TO 546+00

SCALE: AS SHOWN	APPROVED: Jordan W. Mills, CHIEF ENGINEER RE 8271	DRAWN: Bauer - KIM
DATE: 12-1-60		CHECKED: GRS RE10702
DESIGNED: R.G.Vr.-S.A.	SUBMITTED: RE 8557	DRAWING NUMBER: 51-4-102.22

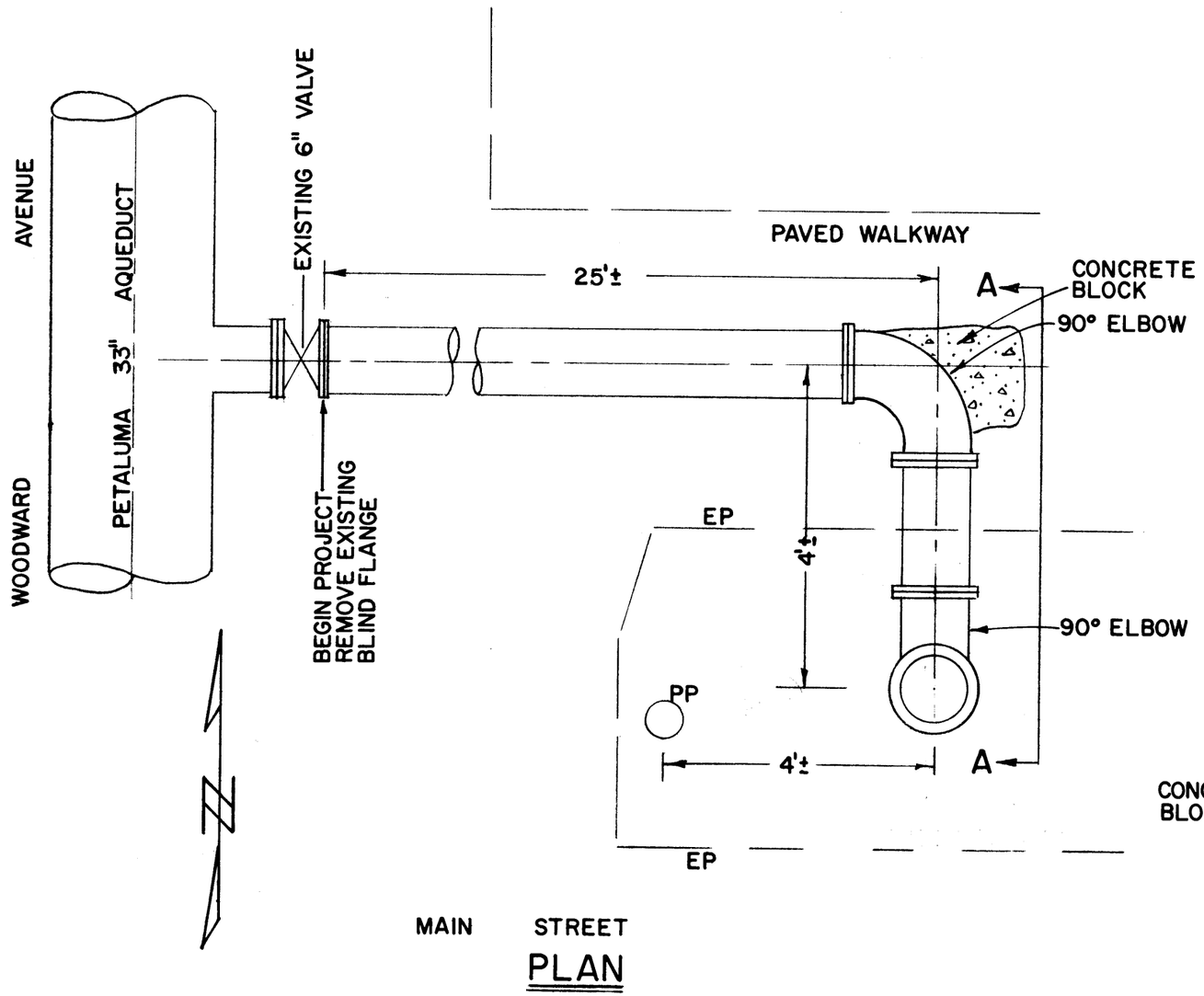

PLAN

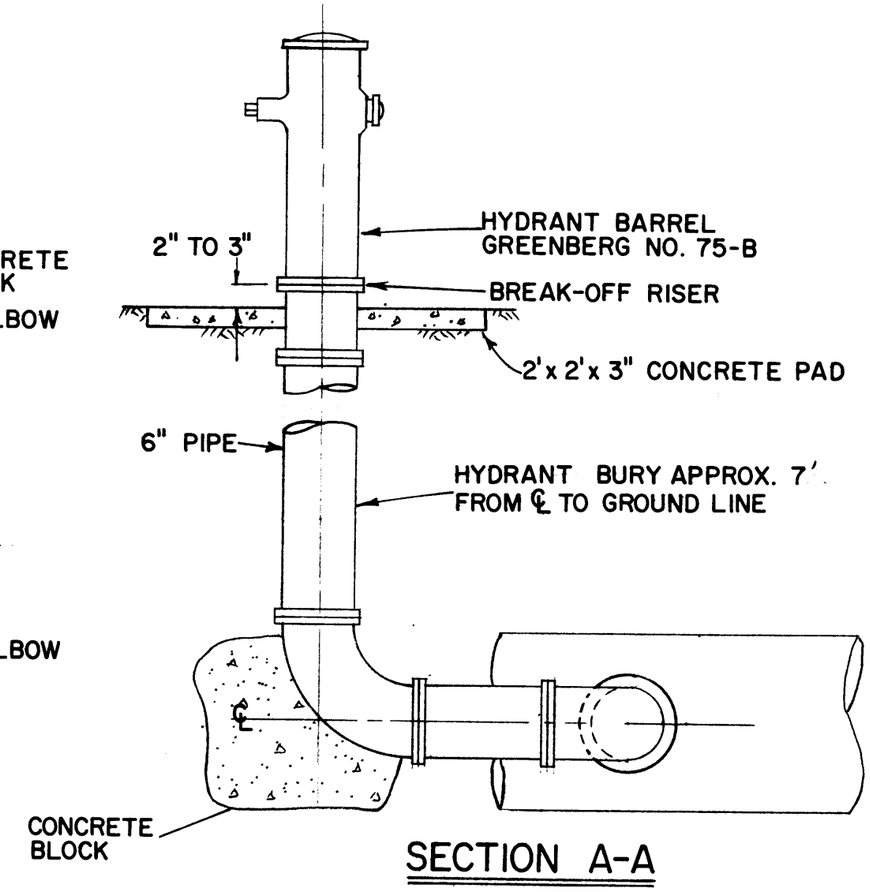

SECTION A-A

Return to Revised Index

NOTES-

1. ALL BURIED PIPING TO BE COATED WITH CEMENT MORTAR 1" THICK.
2. REPLACE BACKFILL, BASE AND PAVING PER DWG. DS-114 USING CLASS B BEDDING AND CLASS A BACKFILL AND TRENCH RESURFACING.
3. 6" PIPE AND FITTINGS-SCHEDULE 40 STEEL OR CLASS 150 CAST IRON.
4. ALL FLANGES AND CONNECTIONS TO BE INSPECTED UNDER STATIC HEAD BEFORE BACKFILLING.

No.	DATE	REVISION	By

FIRE HYDRANT INSTALLATION
MAIN STREET AND WOODWARD AVENUE
PENNGROVE

SCALE: NONE	APPROVED Jordan W. Miller CHIEF ENGINEER RE 8271	DRAWN SKMc	
DATE: 2/9/1962			

SONOMA COUNTY FLOOD CONTROL AND WATER CONSERVATION DISTRICT

DESIGNED	CHECKED	DRAWING NUMBER
GRS RE 10702	OLW RE 8557	51-2-102.2

PRINTED ON DIEPO NO. 1000H CLEARPRINT

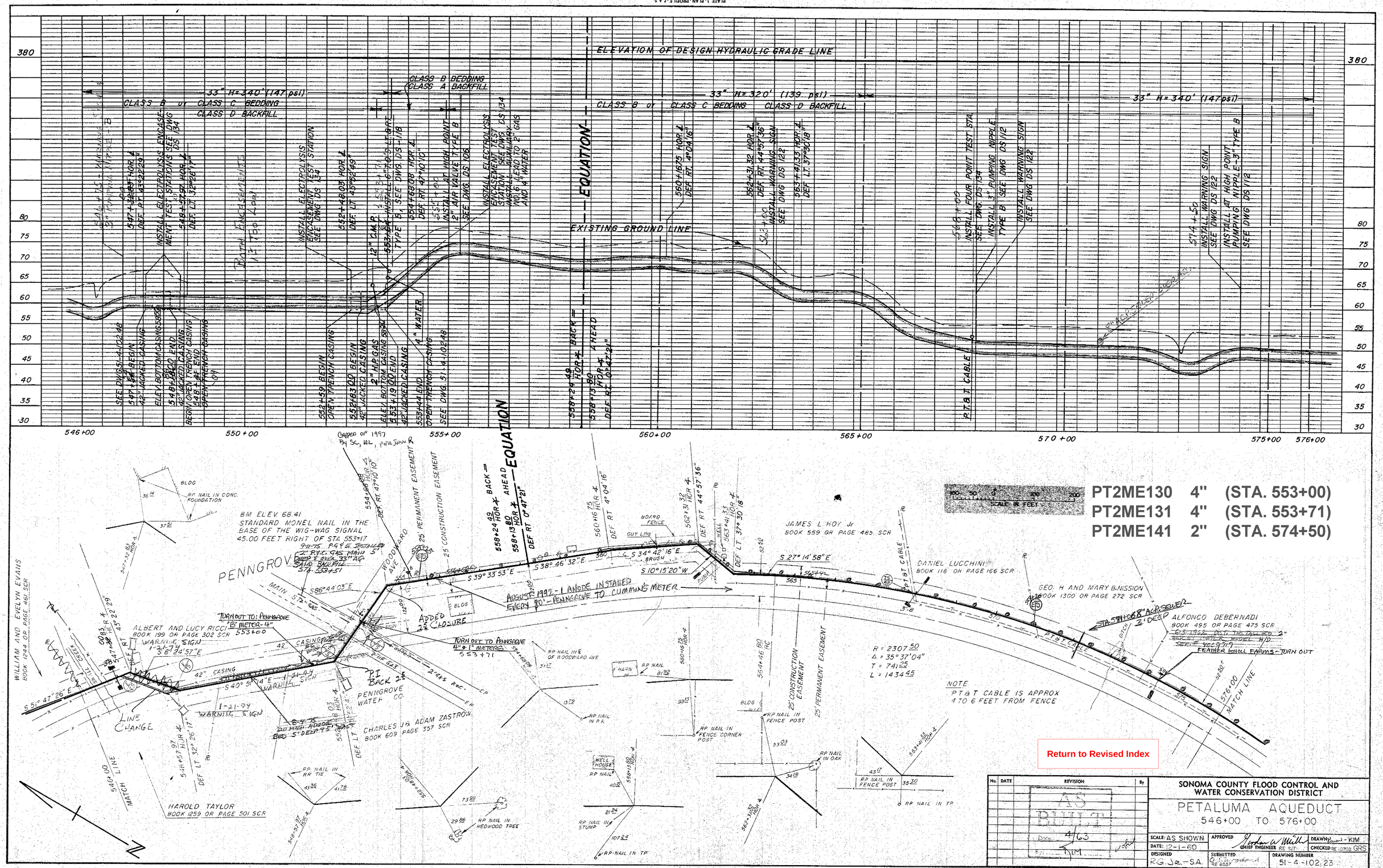

ELEVATION OF DESIGN HYDRAULIC GRADE LINE
EXISTING GROUND LINE
EQUATION
33" H=340' (147 psi)
33" H=320' (139 psi)
CLASS B or CLASS C BEDDING
CLASS D BACKFILL
CLASS B BEDDING
CLASS A BACKFILL
546+00
550+00
555+00
560+00
565+00
570+00
575+00
576+00
PT2ME130 4" (STA. 553+00)
PT2ME131 4" (STA. 553+71)
PT2ME141 2" (STA. 574+50)
SCALE IN FEET
BM ELEV. 68.41
STANDARD MONEL NAIL IN THE BASE OF THE WIG-WAG SIGNAL 45.00 FEET RIGHT OF STA 553+17
PENNGROVE
AUGUST 1992 - 1 ANODE INSTALLED EVERY 80' - PENNGROVE TO CUMMINS METER
ALBERT AND LUCY RICCI BOOK 199 OR PAGE 302 SCR
WILLIAM AND EVELYN EVANS BOOK 1244 OR PAGE 461 SCR
JAMES L HOY Jr BOOK 559 OR PAGE 485 SCR
DANIEL LUCCHINI BOOK 118 OR PAGE 166 SCR
GEO. H AND MARY B. NISSION BOOK 1300 OR PAGE 272 SCR
ALFONCO DEBERNADI BOOK 495 OR PAGE 475 SCR
CHARLES J & ADAM ZASTROW BOOK 609 PAGE 357 SCR
HAROLD TAYLOR BOOK 1259 OR PAGE 501 SCR
PENNGROVE WATER CO.
LINE CHANGE
MATCH LINE
R = 2307.50
Δ = 35°37'04"
T = 741.25
L = 1434.45
NOTE
PT&T CABLE IS APPROX 4 TO 6 FEET FROM FENCE
Return to Revised Index
SONOMA COUNTY FLOOD CONTROL AND WATER CONSERVATION DISTRICT
PETALUMA AQUEDUCT
546+00 TO 576+00
SCALE: AS SHOWN
DATE: 12-1-60
DESIGNED R.G. Jr.-S.A.
APPROVED
CHIEF ENGINEER RE 9271
SUBMITTED
DRAWN
CHECKED RE 10702 GRS
DRAWING NUMBER 51-4-102.23
AS BUILT

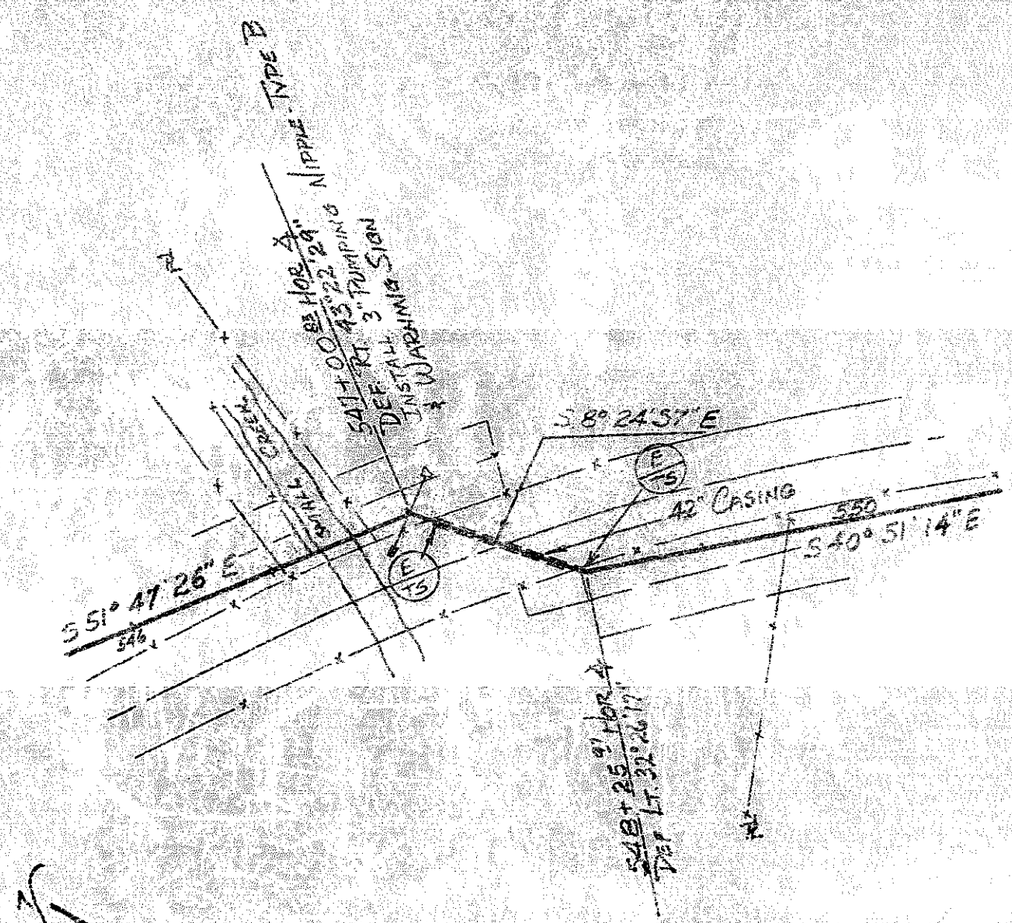

Return to Revised Index

No.	DATE	REVISION	By

PETALUMA AQUEDUCT
546+00 TO 550+00

SCALE: 1" = 100'
DATE:
APPROVED [signature] CHIEF ENGINEER
DRAWN RM

SONOMA COUNTY FLOOD CONTROL AND WATER CONSERVATION DISTRICT

DESIGNED O.L.W.
CHECKED
DRAWING NUMBER 51-4-102 23 H

PLATE 1-PLAN-PROFILE-P.A.S.
CLEARPRINT PAPER CO., S.F., CAL.
No. 1000H-1

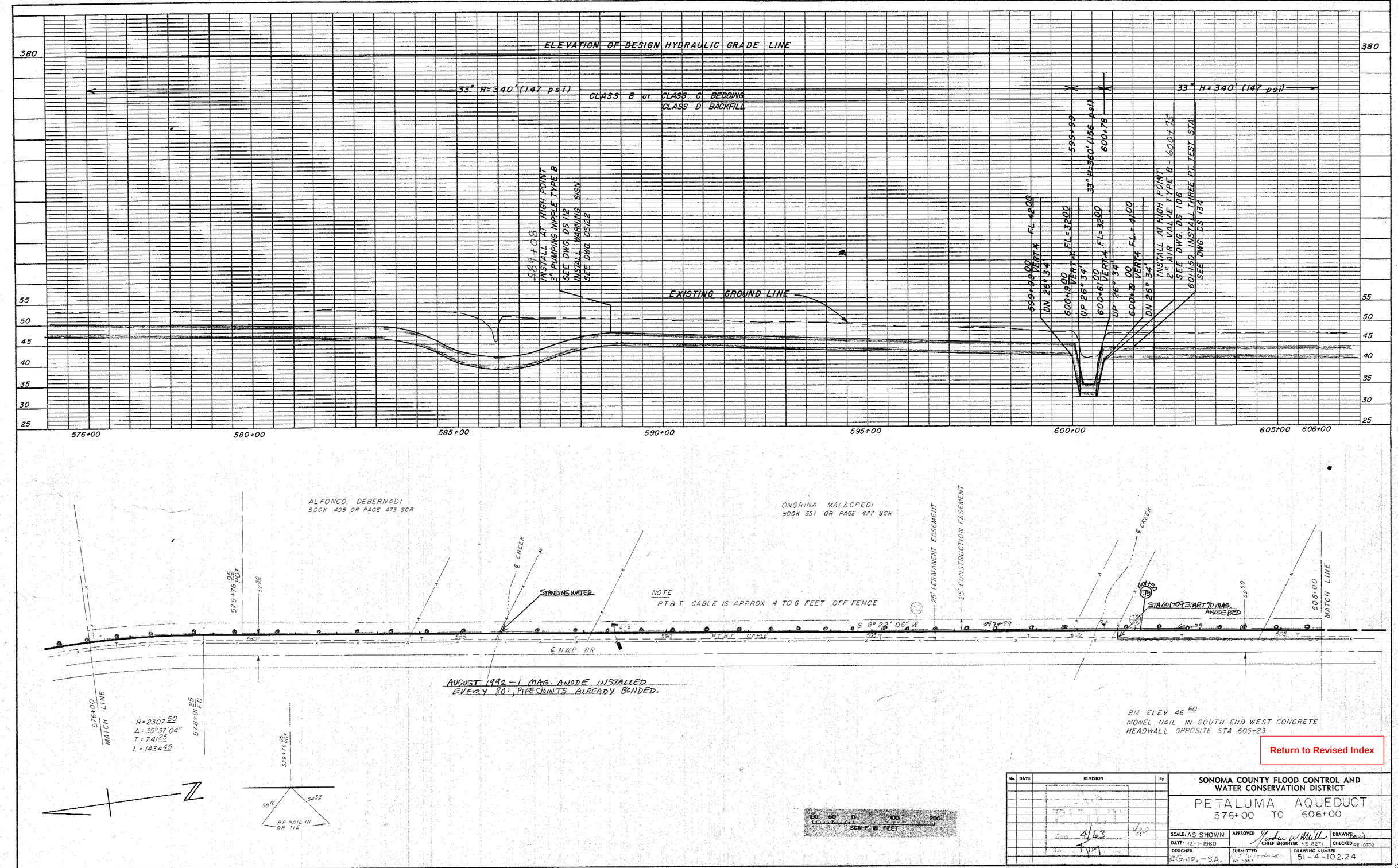

Return to Revised Index

No.	DATE	REVISION	By

SONOMA COUNTY FLOOD CONTROL AND WATER CONSERVATION DISTRICT

PETALUMA AQUEDUCT
576+00 TO 606+00

SCALE: AS SHOWN	APPROVED Gordon W. Smith, CHIEF ENGINEER RE 8271	DRAWN
DATE: 12-1-1960		CHECKED RE 10702
DESIGNED P.G.J.R., -S.A.	SUBMITTED RE 8557	DRAWING NUMBER 51-4-102.24

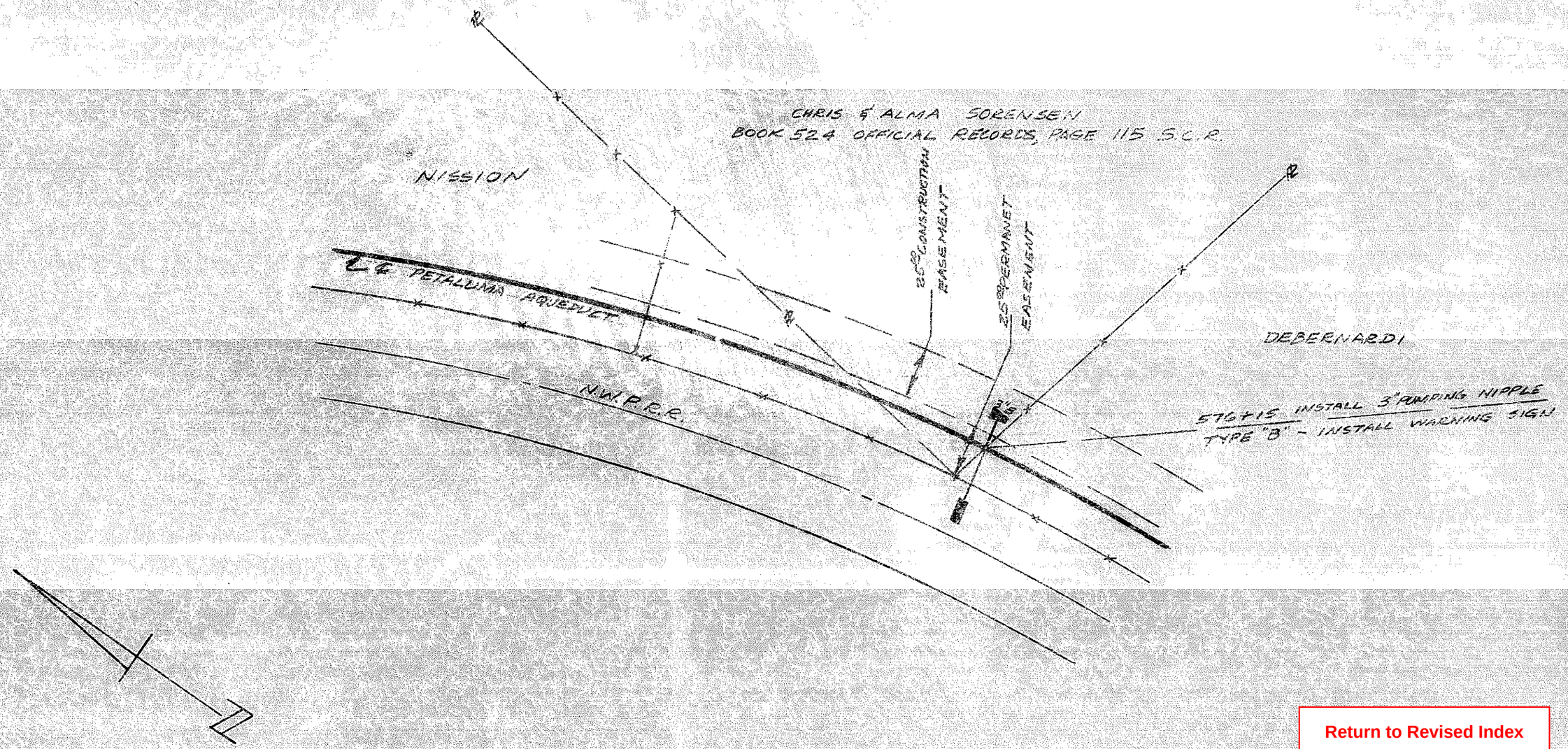

Return to Revised Index

No.	DATE	REVISION	By

PETALUMA AQUEDUCT
SHOWING PUMPING NIPPLE ON SORENSEN
DEBERNARDI PROPERTY LINE

SCALE: NONE
DATE: 3-7-61
APPROVED: [signature]
DRAWN: RBJR

SONOMA COUNTY FLOOD CONTROL AND WATER CONSERVATION DISTRICT

DESIGNED
CHECKED: O.L.W.
DRAWING NUMBER: 51-4-102.24A

PRINTED ON DIEPO NO. 1000H CLEARPRINT

PLATE 1-PLAN-PROFILE-F.A.S.
CLEARPRINT PAPER CO., S. F. CAL.
No. 1000H-1

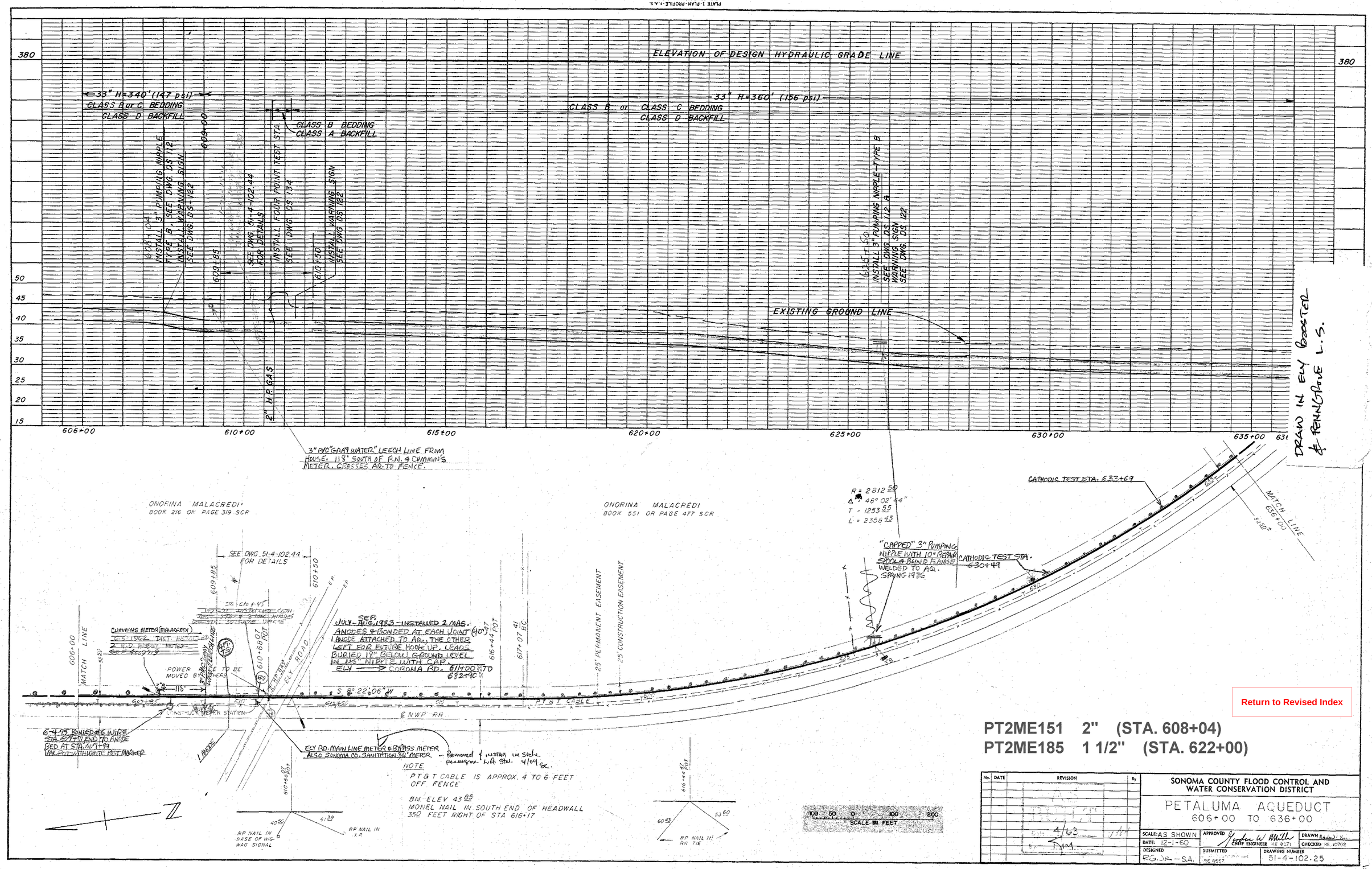

Return to Revised Index

PT2ME151 2" (STA. 608+04)
PT2ME185 1 1/2" (STA. 622+00)

No.	DATE	REVISION	By

SONOMA COUNTY FLOOD CONTROL AND WATER CONSERVATION DISTRICT

PETALUMA AQUEDUCT
606+00 TO 636+00

SCALE: AS SHOWN	APPROVED	DRAWN	
DATE: 12-1-60	CHIEF ENGINEER	CHECKED	
DESIGNED RG.-DP.-S.A.	SUBMITTED	DRAWING NUMBER 51-4-102.25	

PLATE 1-PLAN-PROFILE-F.A.S.
CLEARPRINT PAPER CO. S.F. CAL.
No. 1000H-1

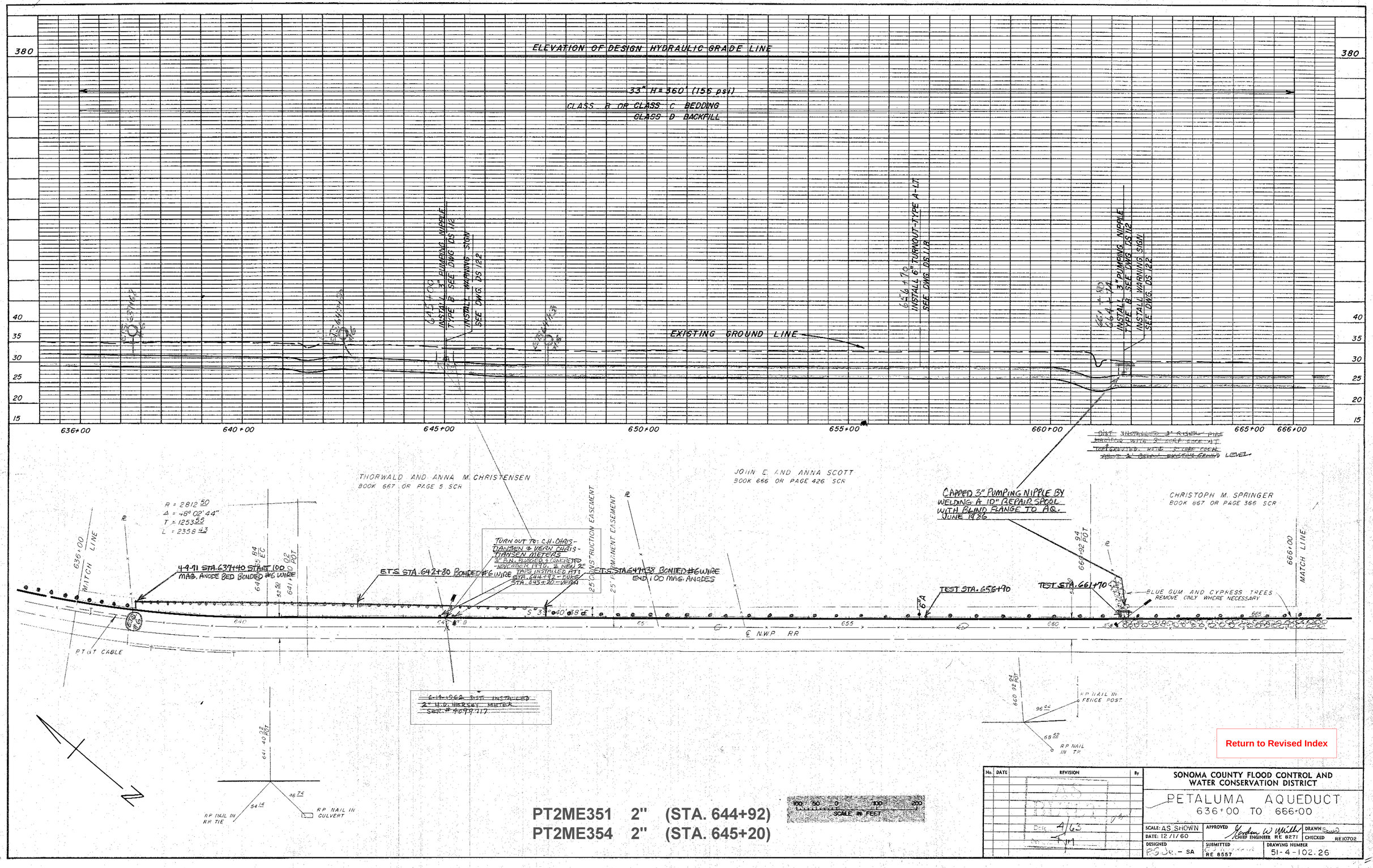

No.	DATE	REVISION	By

SONOMA COUNTY FLOOD CONTROL AND WATER CONSERVATION DISTRICT

PETALUMA AQUEDUCT
636+00 TO 666+00

SCALE: AS SHOWN	APPROVED John W. Mills CHIEF ENGINEER RE 8271	DRAWN	
DATE: 12/1/60		CHECKED	RE 10702
DESIGNED RG Jr. - SA	SUBMITTED RE 8557	DRAWING NUMBER 51-4-102.26	

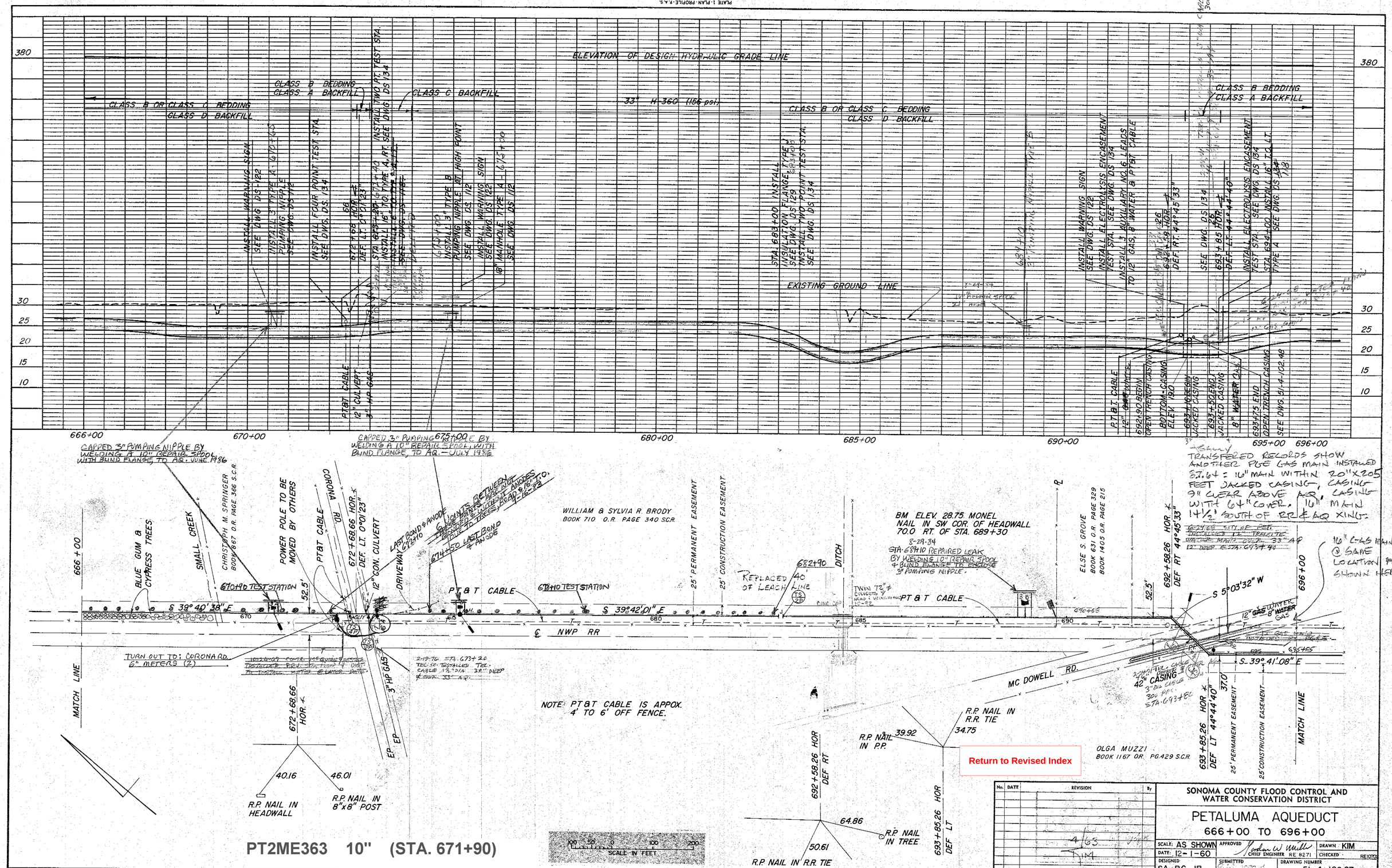

PT2ME363 10" (STA. 671+90)

No.	DATE	REVISION	By

SONOMA COUNTY FLOOD CONTROL AND WATER CONSERVATION DISTRICT

PETALUMA AQUEDUCT

666+00 TO 696+00

SCALE: AS SHOWN	APPROVED: Andrew W. Mullen, CHIEF ENGINEER RE 8271	DRAWN: KIM	
DATE: 12-1-60		CHECKED:	REIOTOS
DESIGNED: SA-RG JR	SUBMITTED: RE 8557	DRAWING NUMBER: 51-4-102.27	

Return to Revised Index

SEE SHEET 27-A - LINE CHANGE

PLATE 1-PLAN-PROFILE-P.A.S.
CLEARPRINT PAPER CO. S.F. CAL.
No. 1000H-1

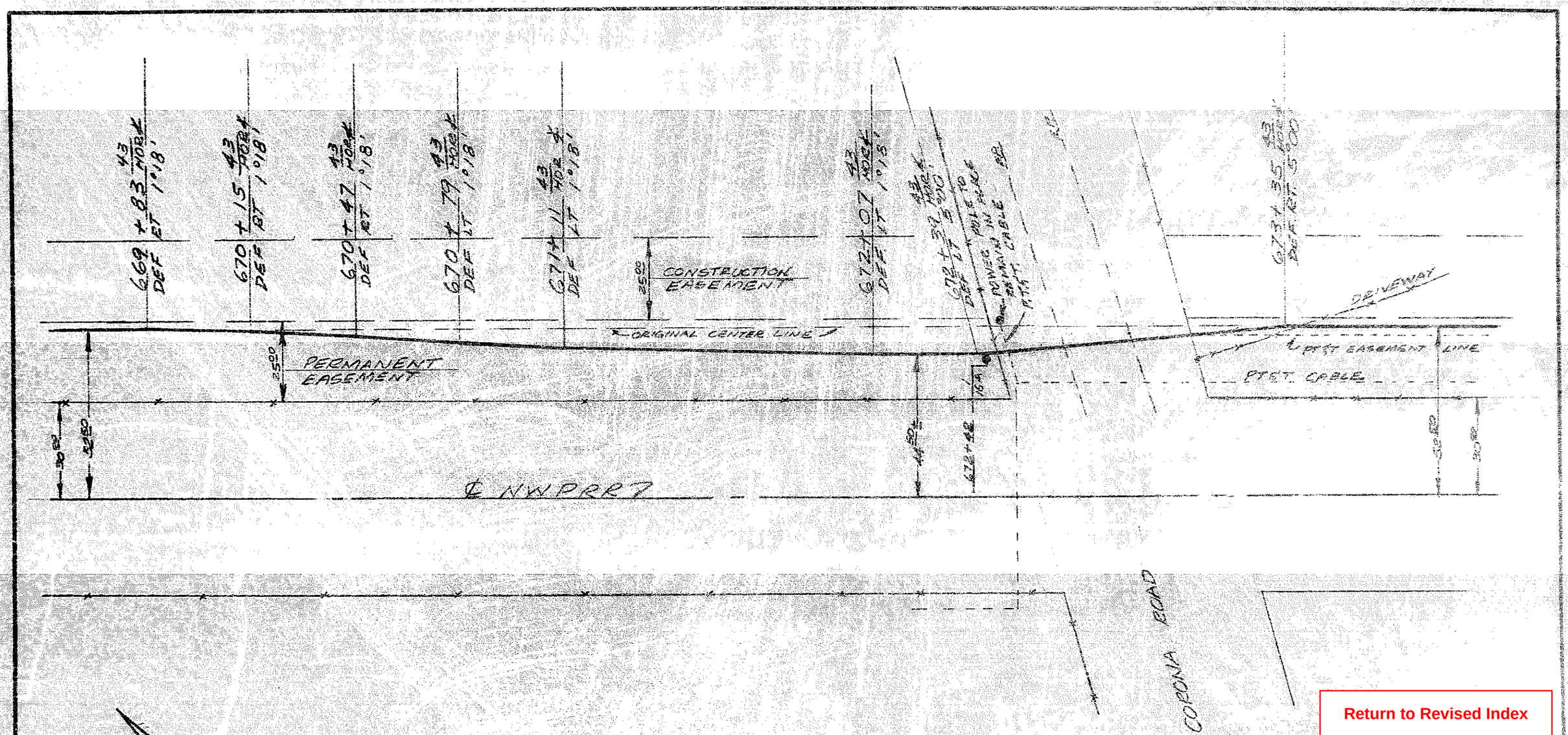

Return to Revised Index

No.	DATE	REVISION	By

PETALUMA AQUEDUCT
LINE CHANGE BETWEEN
STA. 669+83 43 TO STA 673+35 43

SCALE: 1" = 30'
DATE: 2-23-61
APPROVED: [signature] CHIEF ENGINEER
DRAWN: RGJR

SONOMA COUNTY FLOOD CONTROL AND WATER CONSERVATION DISTRICT

DESIGNED: R.GJR
CHECKED:
DRAWING NUMBER: 51-4-102 37 A

PRINTED ON DIEPO NO. 1000H CLEARPRINT

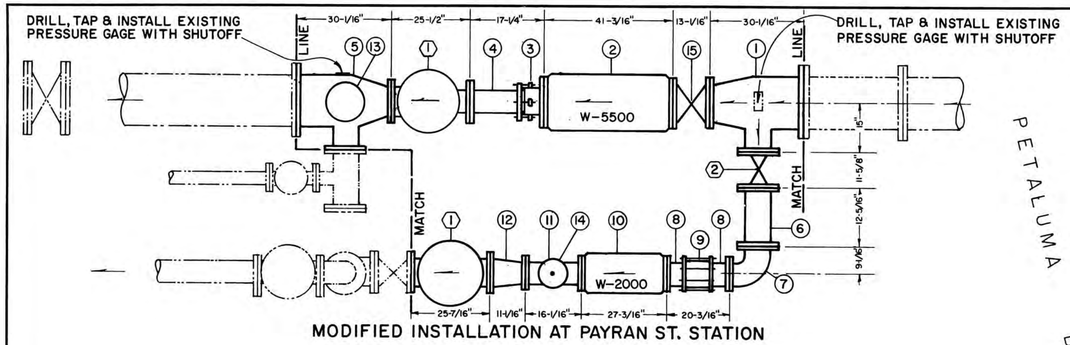

MODIFIED INSTALLATION AT PAYRAN ST. STATION

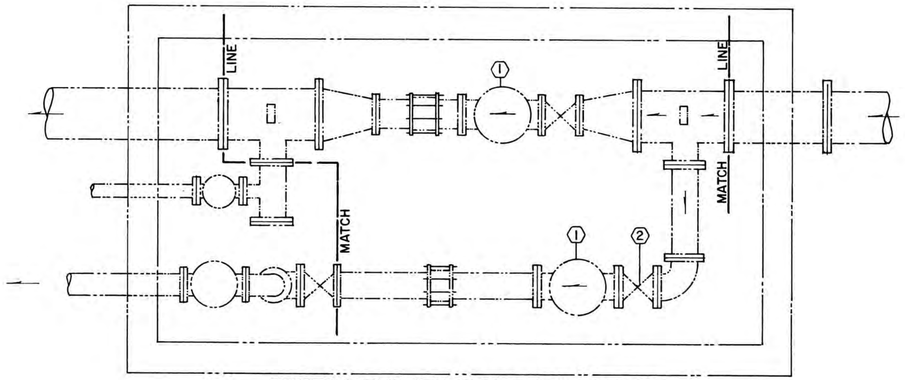

EXISTING FACILITY AT PAYRAN ST. STATION

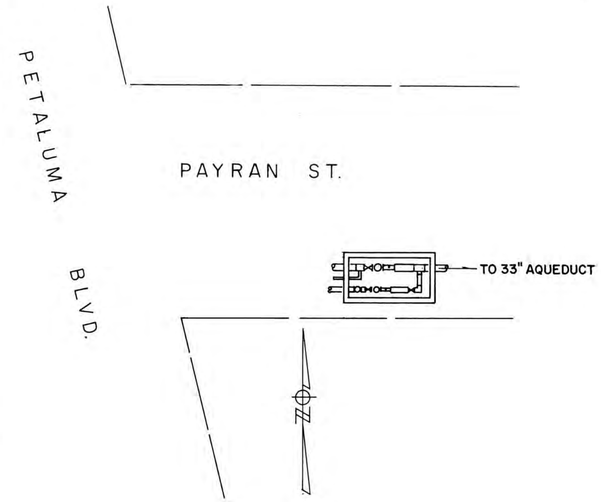

PAYRAN ST. STATION

SCHEDULE OF ITEMS (FROM GENERAL STOCK)		SCHEDULE OF ITEMS (AT SITE IN EXISTING INSTALLATION)	
1	16"x10"x8" TEE	1	8" PRESSURE REDUCER (2 PLACES)
2	10" ROCKWELL METER, W-5500	2	8" GATE VALVE
3	10" FLANGED x 8" PLAIN END FLANGED COUPLING ADAPTOR SMITH-BLAIR No. 914-10-863		
4	8" NIPPLE, LENGTH TO SUIT F.O.E./P.O.E.		
5	16"x8"x8"x6" SIDE OUTLET TEE, RT HAND		
6	8" NIPPLE, LENGTH TO SUIT F.B.E.		
7	8"x6" REDUCING ELL		
8	6" NIPPLE, LENGTH TO SUIT F.O.E./P.O.E.(2 REQ'D)		
9	6" FLEX COUPLING		
10	6" ROCKWELL METER, W-2000		
11	6"x6"x4" TEE		
12	8"x6" REDUCER		
13	6" BLIND FLANGE		
14	4" BLIND FLANGE		
15	10" GATE VALVE		

PT2ME371 10" (STA. 768+90)
PT2ME372 6"

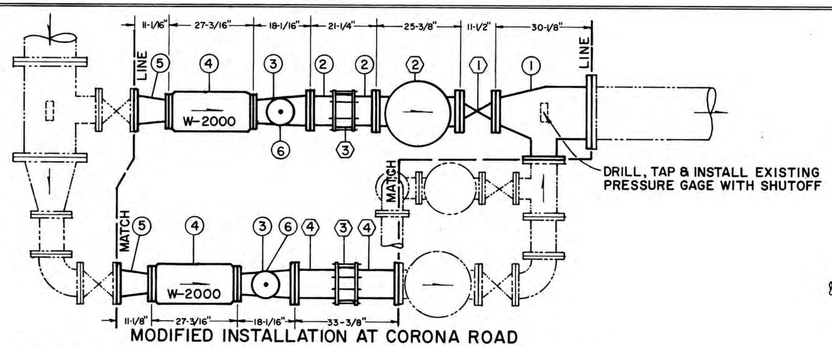

MODIFIED INSTALLATION AT CORONA ROAD

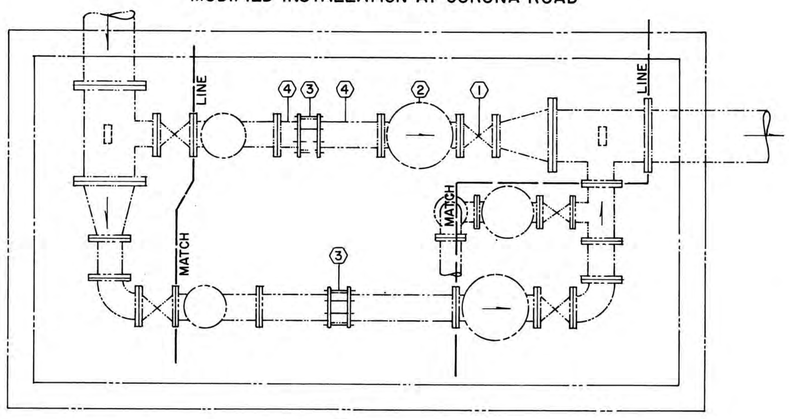

EXISTING FACILITY AT CORONA ROAD

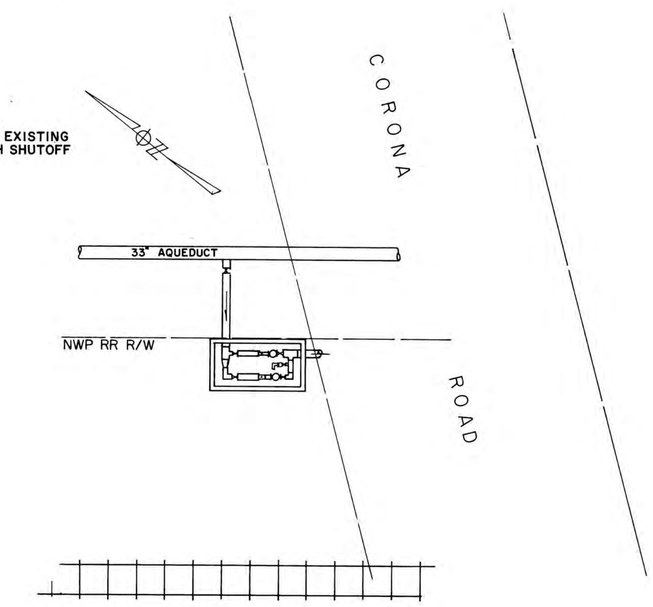

CORONA ROAD

SCHEDULE OF ITEMS (FROM GENERAL STOCK)		SCHEDULE OF ITEMS (AT SITE IN EXISTING INSTALLATION)	
1	16"x8"x8" TEE	1	8" GATE VALVE
2	8" NIPPLE, LENGTH TO SUIT F.O.E./P.O.E. (2 REQ'D)	2	8" PRESSURE REDUCER
3	8"x6"x4" TEE (2 REQ'D.)	3	8" FLEX COUPLING (2 PLACES)
4	6" ROCKWELL METER, W-2000 (2 REQ'D)	4	8" NIPPLE, F.O.E./P.O.E. (2 PLACES)
5	8"x6" REDUCER (2 REQ'D)		
6	4" BLIND FLANGE (2 REQ'D)		

PT2ME361 6" (STA. 672+40)
PT2ME362 6"

INSTALLATION OF METERS BY SONOMA COUNTY FLOOD CONTROL & WATER CONSERVATION DISTRICT IN CITY OF PETALUMA PRESSURE REGULATING VAULTS

APPROVED D. A. Young City Engineer, Petaluma Date 9/16/68

Return to Revised Index

No.	DATE	REVISION	By
		AS BUILT Date 5-6-77 By:	

WATER METER INSTALLATIONS
CORONA ROAD & N.W.P. R.R.
PAYRAN ST. STATION
PETALUMA

SCALE: 1/2"=1'-0" | APPROVED Gordon W. Mills CHIEF ENGINEER | DRAWN kwp
DATE: AUG 21, 1968 | CHECKED

SONOMA COUNTY FLOOD CONTROL AND WATER CONSERVATION DISTRICT

DESIGNED | SUBMITTED | DRAWING NUMBER 60-2-102.10

PT 11-4D

MICROFILMED

PRINTED ON DIEPO NO. 1028 PAPERCLOTH

PLATE 1-PLAN-PROFILE-P.A.S.
CLEARPRINT PAPER CO., S.F. CAL.
No. 1000H-1

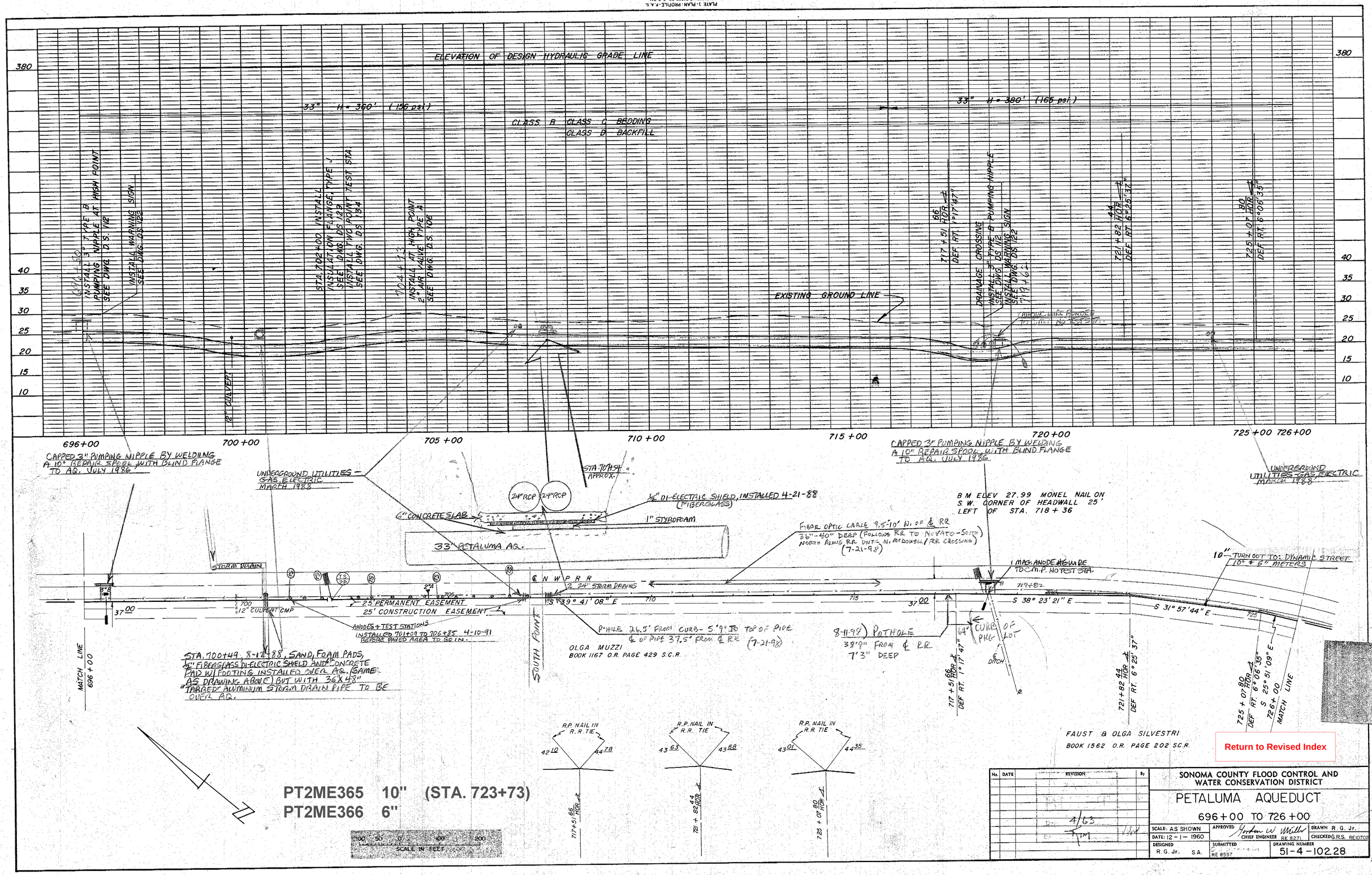

Return to Revised Index

No.	DATE	REVISION	By

SONOMA COUNTY FLOOD CONTROL AND WATER CONSERVATION DISTRICT

PETALUMA AQUEDUCT

696+00 TO 726+00

SCALE: AS SHOWN	APPROVED Norbert W. Miller CHIEF ENGINEER RE 8271	DRAWN R. G. Jr.
DATE: 12-1-1960		CHECKED G.R.S. RE10702
DESIGNED R. G. Jr. S.A.	SUBMITTED RE 8557	DRAWING NUMBER 51-4-102.28

VIEW – A

NTS

SITE PLAN

SCALE: 1" =200'

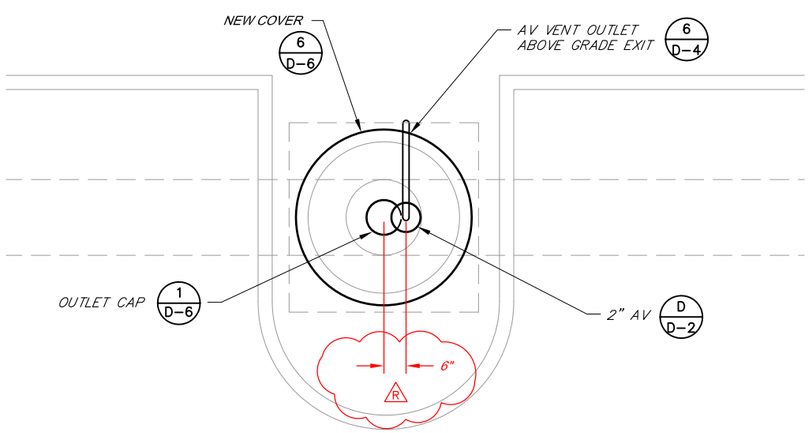

PARTIAL PLAN

NTS

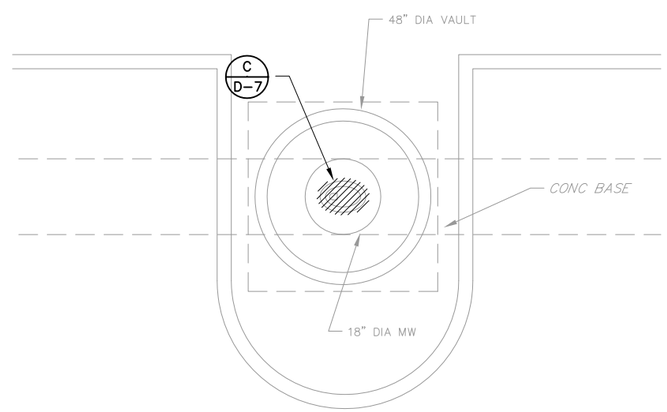

DEMOLITION PLAN

NTS

PROJECT RECORD DRAWING

Prepared by:

Pipeline Excavators
P.O. Box 1755
Sebastopol, Ca 95473

(707) 824–8546

January 28, 2009

NOTE:
APPROXIMATELY 4 FEET OF COVER OVER PIPE

Return to Revised Index

BAR LENGTH ON ORIGINAL DRAWING EQUALS ONE INCH. ADJUST SCALE ACCORDINGLY

REGISTERED PROFESSIONAL ENGINEER DALE P. ROBERTS No. M 029944 Exp. 6/30/08 MECHANICAL STATE OF CALIFORNIA

REGISTERED PROFESSIONAL ENGINEER DALE P. ROBERTS No. C 67949 Exp. 6/30/09 CIVIL STATE OF CALIFORNIA

NO.	DATE	REVISION	BY
	07/25/08	CONFORMED	
R	04–14–09	RECORD DRAWING ACCEPTED BY SCWA	

SONOMA COUNTY WATER AGENCY

SCALE : AS SHOWN
DATE : 28/05/2008
DRAWN : ADF
REVIEWED

AIR VALVE UPGRADE PROJECT PHASE 1
PETALUMA AQUEDUCT
STA 704+93 SITE PLAN AND DETAILS

FILE NAME: 4078c17–24R.dwg
CONTRACT NUMBER: DALE ROBERTS
DRAWING NUMBER: C–22
SHEET 27 OF 63

\\Sd-data\Proj\water transmission\pipelines\4078_AV-Replacement\4078_record-dwgs\4078c17-24R.dwg

PLATE 1. PLAN-PROFILE. F.A.S.
CLEARPRINT PAPER CO. S.F. CAL.
No. 1000H-1

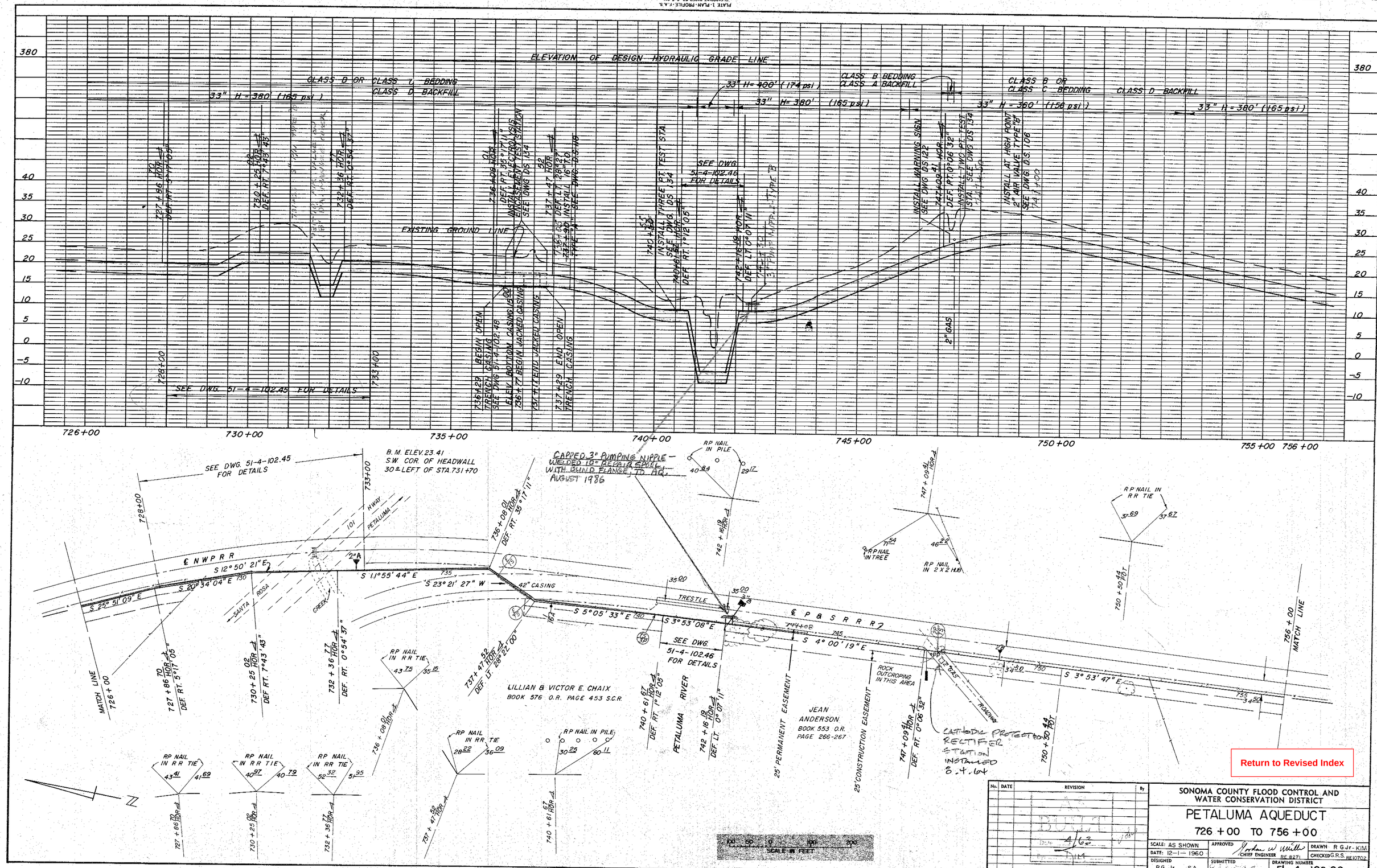

No.	DATE	REVISION	By

SONOMA COUNTY FLOOD CONTROL AND WATER CONSERVATION DISTRICT

PETALUMA AQUEDUCT

726 + 00 TO 756 + 00

SCALE: AS SHOWN
DATE: 12-1-1960
DESIGNED R.G. Jr. S.A.
APPROVED Gordon W. Willis CHIEF ENGINEER RE 8271
SUBMITTED RE 8557
DRAWN R.G. Jr.-KIM
CHECKED G.R.S. RE 10702
DRAWING NUMBER 51-4-102.29

Return to Revised Index

PLATE 1-PLAN-PROFILE-P.A.S.
CLEARPRINT PAPER CO. S.F. CAL.
No. 1000H-1

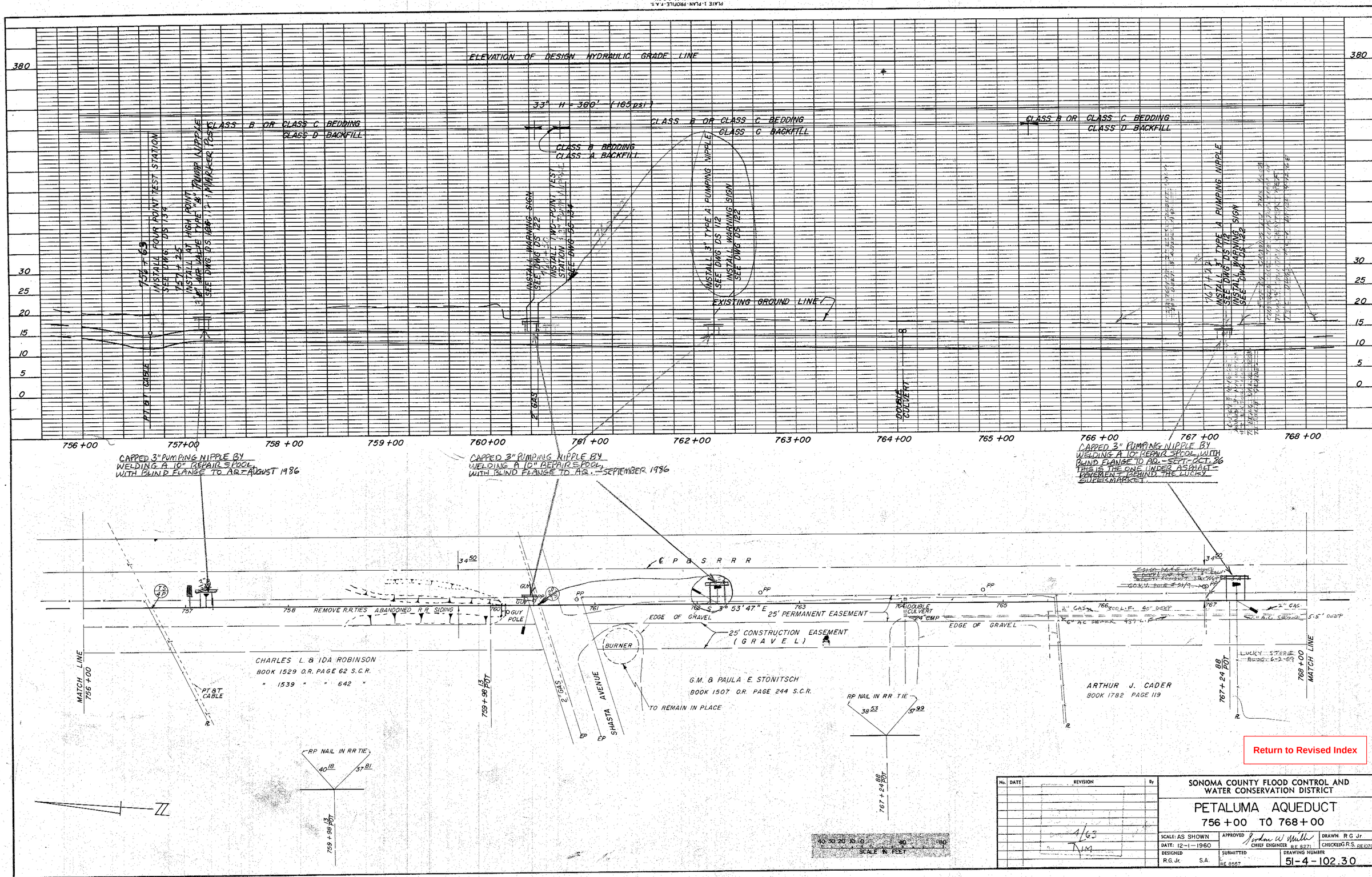

Return to Revised Index

No.	DATE	REVISION	By

1/63
RJM

SONOMA COUNTY FLOOD CONTROL AND WATER CONSERVATION DISTRICT

PETALUMA AQUEDUCT

756+00 TO 768+00

SCALE: AS SHOWN	APPROVED Gordon W. Müller CHIEF ENGINEER RE 8271	DRAWN R G Jr	
DATE: 12-1-1960		CHECKED R.S. RE 10702	
DESIGNED R.G. Jr.	SUBMITTED S.A. RE 8857	DRAWING NUMBER 51-4-102.30	

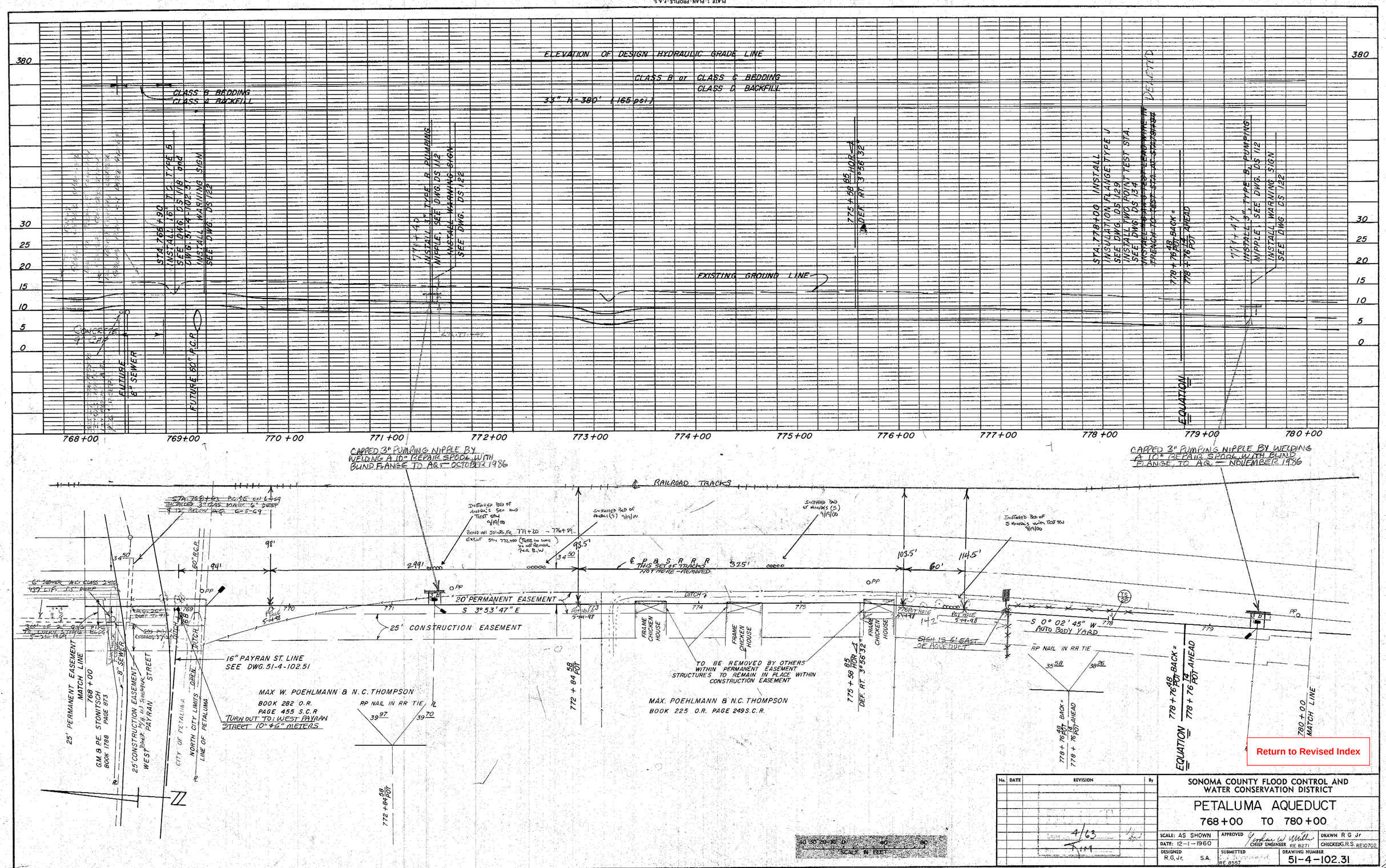

Return to Revised Index

No.	DATE	REVISION	By

SONOMA COUNTY FLOOD CONTROL AND WATER CONSERVATION DISTRICT

PETALUMA AQUEDUCT

768+00 TO 780+00

SCALE: AS SHOWN	APPROVED Jordan W. Miller CHIEF ENGINEER RE 8271	DRAWN R G Jr
DATE: 12-1-1960		CHECKED G.R.S. RE10702
DESIGNED R.G.Jr. S.A.	SUBMITTED RE 8557	DRAWING NUMBER 51-4-102.31

ABBREVIATIONS

C.I. = CAST IRON
FBE = FLANGE BOTH ENDS
FOE-POE = FLANGE ONE END – PLAIN ONE END
FOE-TOE = FLANGE ONE END – THREADED ONE END
FLEX. COUP. = FLEXIBLE COUPLING
GALV. = GALVANIZED
G.V. = GATE VALVE
T.O. = TURN-OUT
STD. SPECS. = STANDARD SPECIFICATIONS

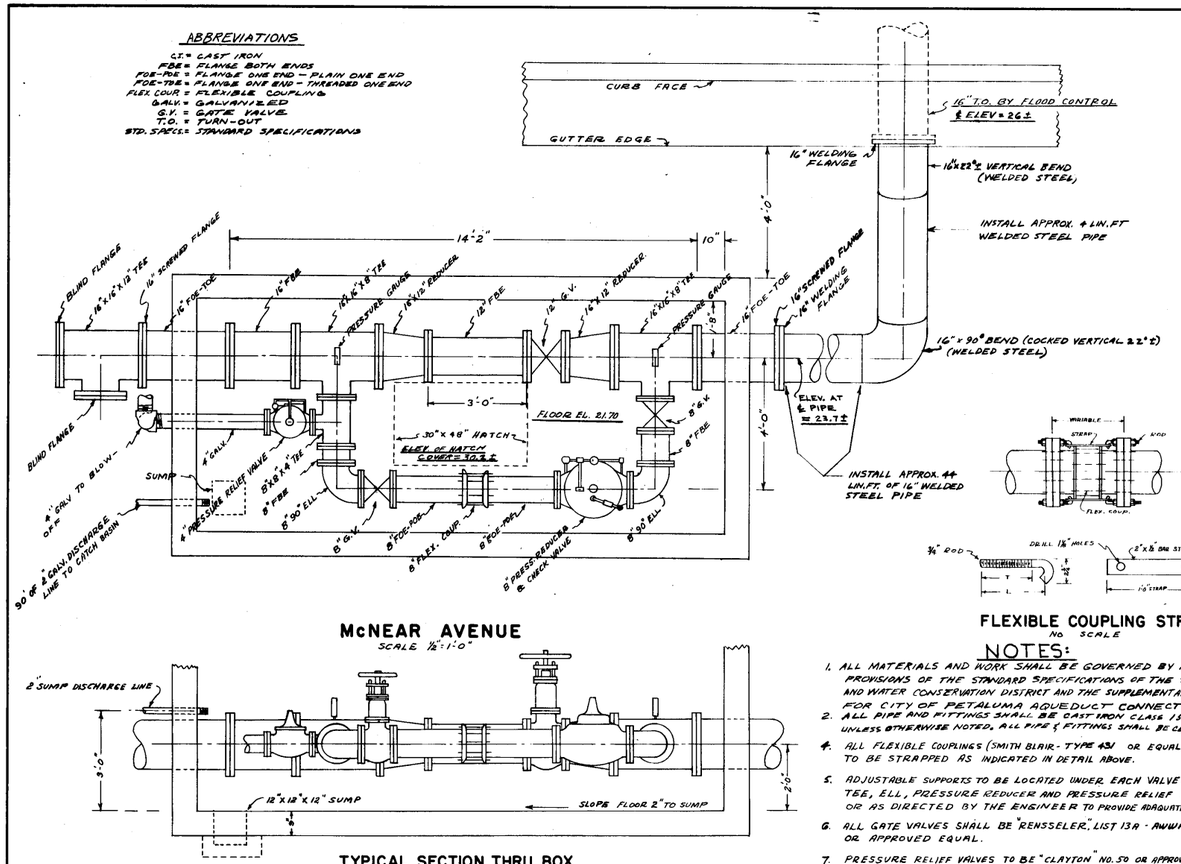

McNEAR AVENUE
SCALE ½" = 1'-0"

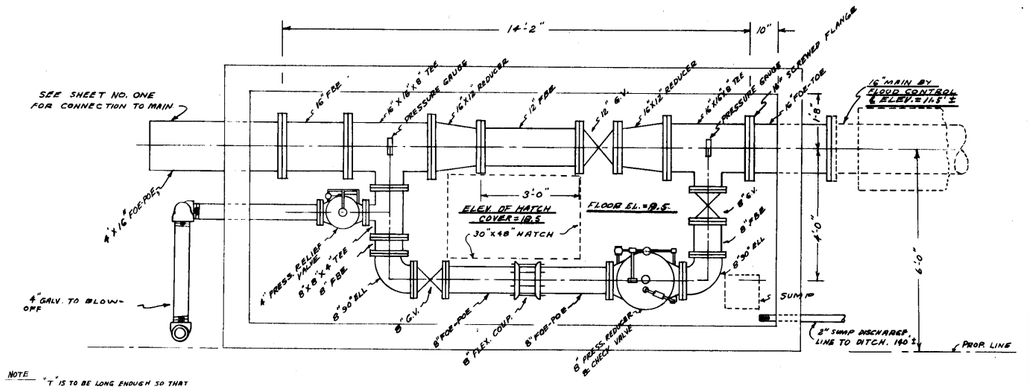

NOTE
"T" IS TO BE LONG ENOUGH SO THAT THREADS WILL EXTEND BEYOND NUTS BY ⅛". "L" IS TO BE A MINIMUM OF T + 1". 4 RODS AND 2 STRAPS REQ'D FOR EACH FLEX. COUP.

WEST PAYRAN STREET
SCALE ½" = 1'-0"

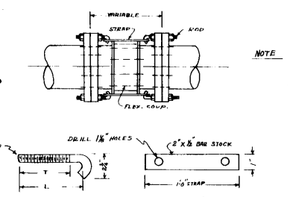

FLEXIBLE COUPLING STRAP
NO SCALE

NOTE
ALL EDGES & SURFACES TO BE GROUND SMOOTH AFTER FABRICATION. ENTIRE ASSEMBLY TO BE HOT DIP GALVANIZED

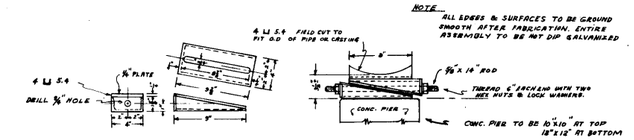

ADJUSTABLE SUPPORT DETAIL
NO SCALE

NOTES:

1. ALL MATERIALS AND WORK SHALL BE GOVERNED BY APPLICABLE PROVISIONS OF THE STANDARD SPECIFICATIONS OF THE SON. CO. FLOOD CONTROL AND WATER CONSERVATION DISTRICT AND THE SUPPLEMENTAL SPECIFICATIONS FOR CITY OF PETALUMA AQUEDUCT CONNECTIONS.
2. ALL PIPE AND FITTINGS SHALL BE CAST IRON CLASS 150, WITH 125 LB FLANGES, UNLESS OTHERWISE NOTED. ALL PIPE & FITTINGS SHALL BE CEMENT LINED & COAL-TAR COATED.
4. ALL FLEXIBLE COUPLINGS (SMITH BLAIR - TYPE 431 OR EQUAL) ARE TO BE STRAPPED AS INDICATED IN DETAIL ABOVE.
5. ADJUSTABLE SUPPORTS TO BE LOCATED UNDER EACH VALVE, TEE, ELL, PRESSURE REDUCER AND PRESSURE RELIEF VALVE AND/OR AS DIRECTED BY THE ENGINEER TO PROVIDE ADEQUATE SUPPORT.
6. ALL GATE VALVES SHALL BE "RENSSELER," LIST 13A - AWWA, OR APPROVED EQUAL.
7. PRESSURE RELIEF VALVES TO BE "CLAYTON" NO. 50 OR APPROVED EQUAL.
8. PRESSURE REDUCING VALVES TO BE "CLAYTON" NO. 91 PRESSURE REDUCING & CHECK VALVE OR APPROVED EQUAL.
9. PRESSURE GAUGES TO BE 6" "MARSH," TYPE 1, PCPSR, OR APPROVED EQUAL WITH DIAL RANGE 0 TO 300 LBS.
10. JOINTS BETWEEN PIPES AND CONCRETE WALLS SHALL BE CAULKED WATERTIGHT.
11. WELDED STEEL PIPE & FITTINGS SHALL BE CEMENT LINED AND COAL-TAR COATED & SHALL CONFORM TO APPROPRIATE PROVISIONS OF THE DISTRICT STD. SPECS. & SPECIAL PROVISIONS.

TYPICAL SECTION THRU BOX
SCALE ½" = 1'-0"

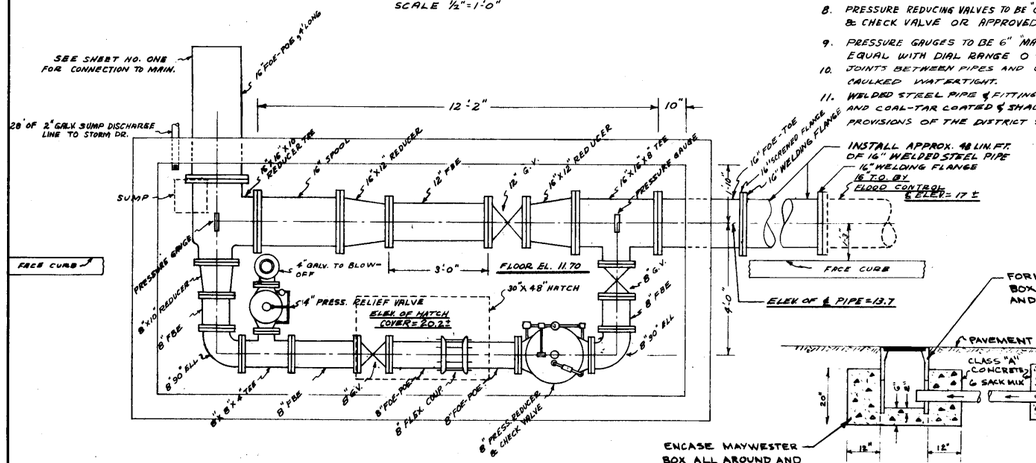

WASHINGTON STREET
SCALE ½" = 1'-0"

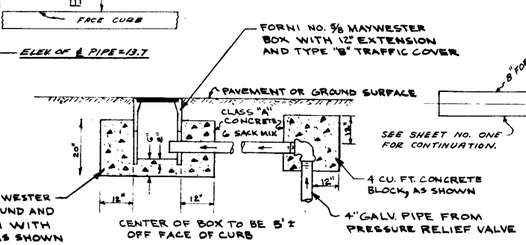

BLOW OFF DETAIL
NO SCALE

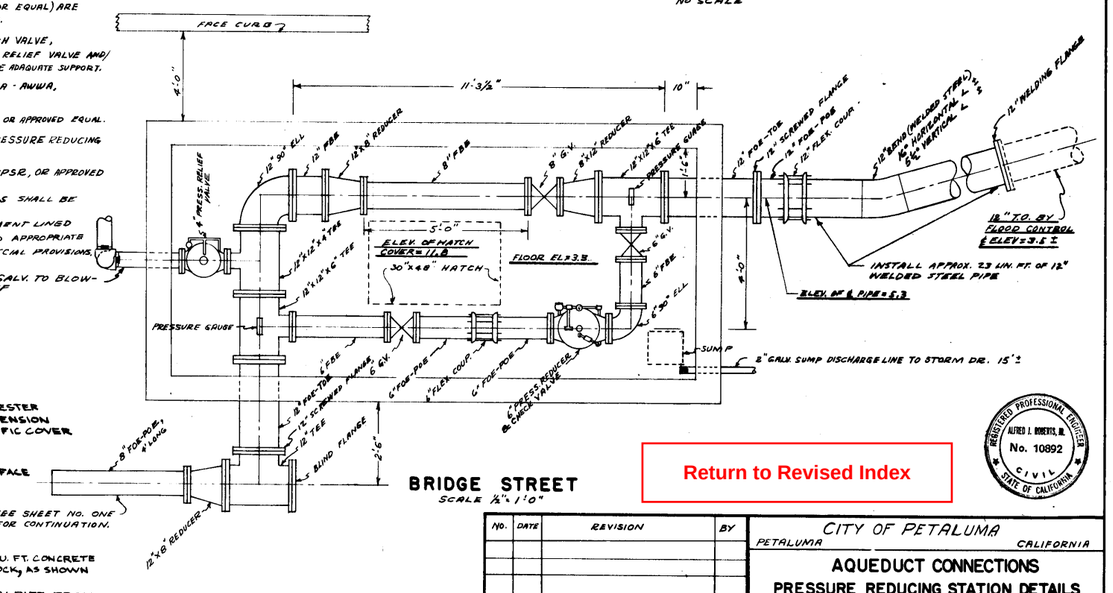

BRIDGE STREET
SCALE ½" = 1'-0"

Return to Revised Index

REGISTERED PROFESSIONAL ENGINEER
ALFRED J. ROBERTS, JR.
No. 10892
CIVIL
STATE OF CALIFORNIA

NO.	DATE	REVISION	BY

CITY OF PETALUMA
PETALUMA CALIFORNIA

AQUEDUCT CONNECTIONS
PRESSURE REDUCING STATION DETAILS

SCALE SHOWN	APPROVED RCE 10892 CITY ENGINEER	DRAWN - KELLY
DATE 11-7-60		CHECKED - STRATFORD
DESIGN A.J. ROBERTS JR.	JOB NO. 184 FILE No. 32-2	SHEET 2 OF 2

51-4-102.53

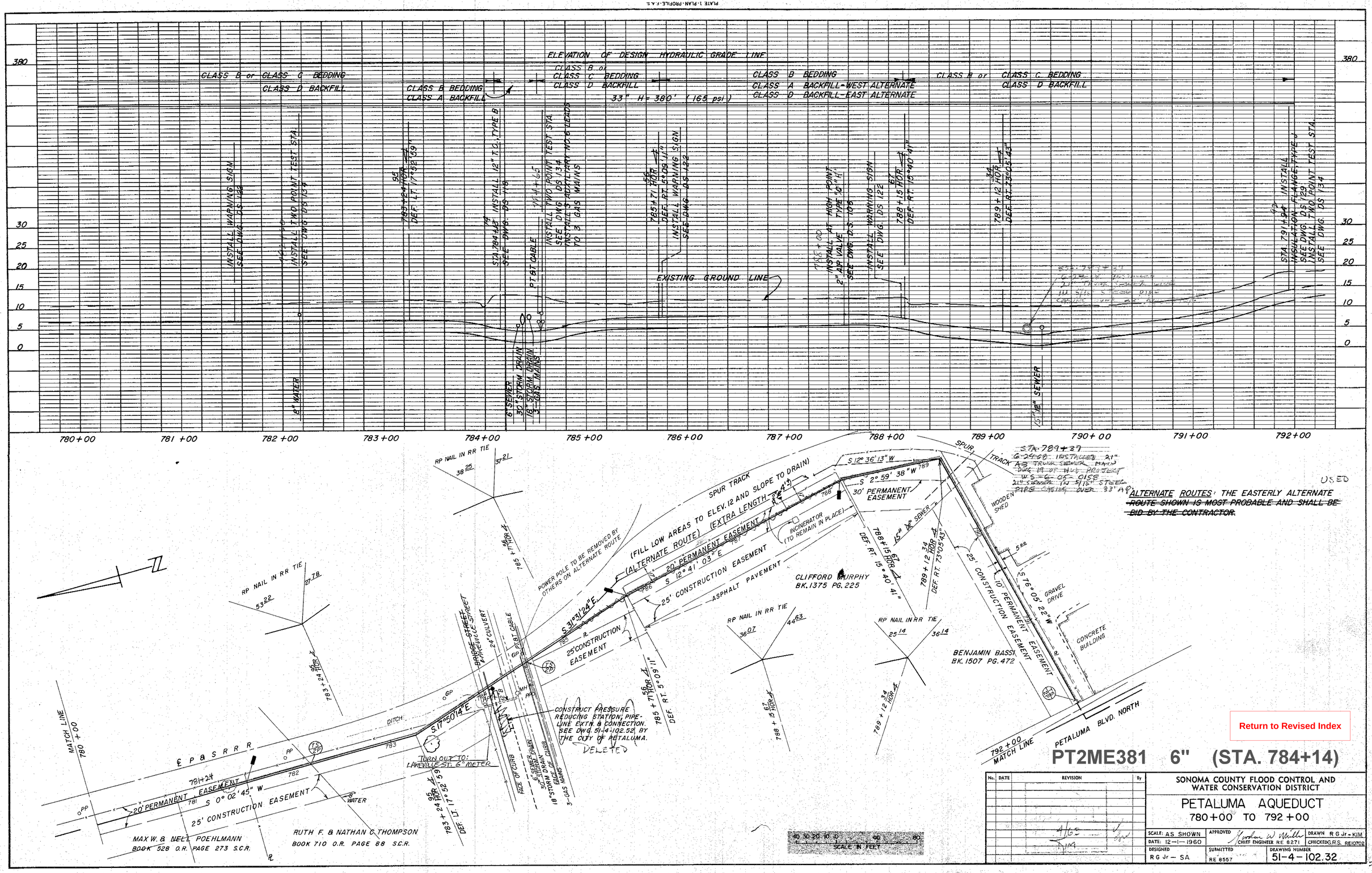

STA. 789+37
6-24-68 INSTALLED 21" AB TRUNK SEWER MAIN DWG 19 OF HUD PROJECT W.S.-6-05-0158
21" SEWER IN 5/16" STEEL PIPE CASING OVER 33" AB

USED

ALTERNATE ROUTES: THE EASTERLY ALTERNATE ~~ROUTE SHOWN IS MOST PROBABLE AND SHALL BE BID BY THE CONTRACTOR.~~

Return to Revised Index

PT2ME381 6" (STA. 784+14)

No.	DATE	REVISION	By

SONOMA COUNTY FLOOD CONTROL AND WATER CONSERVATION DISTRICT

PETALUMA AQUEDUCT
780+00 TO 792+00

SCALE: AS SHOWN	APPROVED: Gordon W. Miller, CHIEF ENGINEER RE 8271	DRAWN R G Jr - KIM
DATE: 12-1-1960		CHECKED G.R.S. RE10702
DESIGNED R G Jr - SA	SUBMITTED RE 8557	DRAWING NUMBER 51-4-102.32

PLATE 1-PLAN-PROFILE-F.A.S.
CLEARPRINT PAPER CO., S.F. CAL.
No. 1000H-1

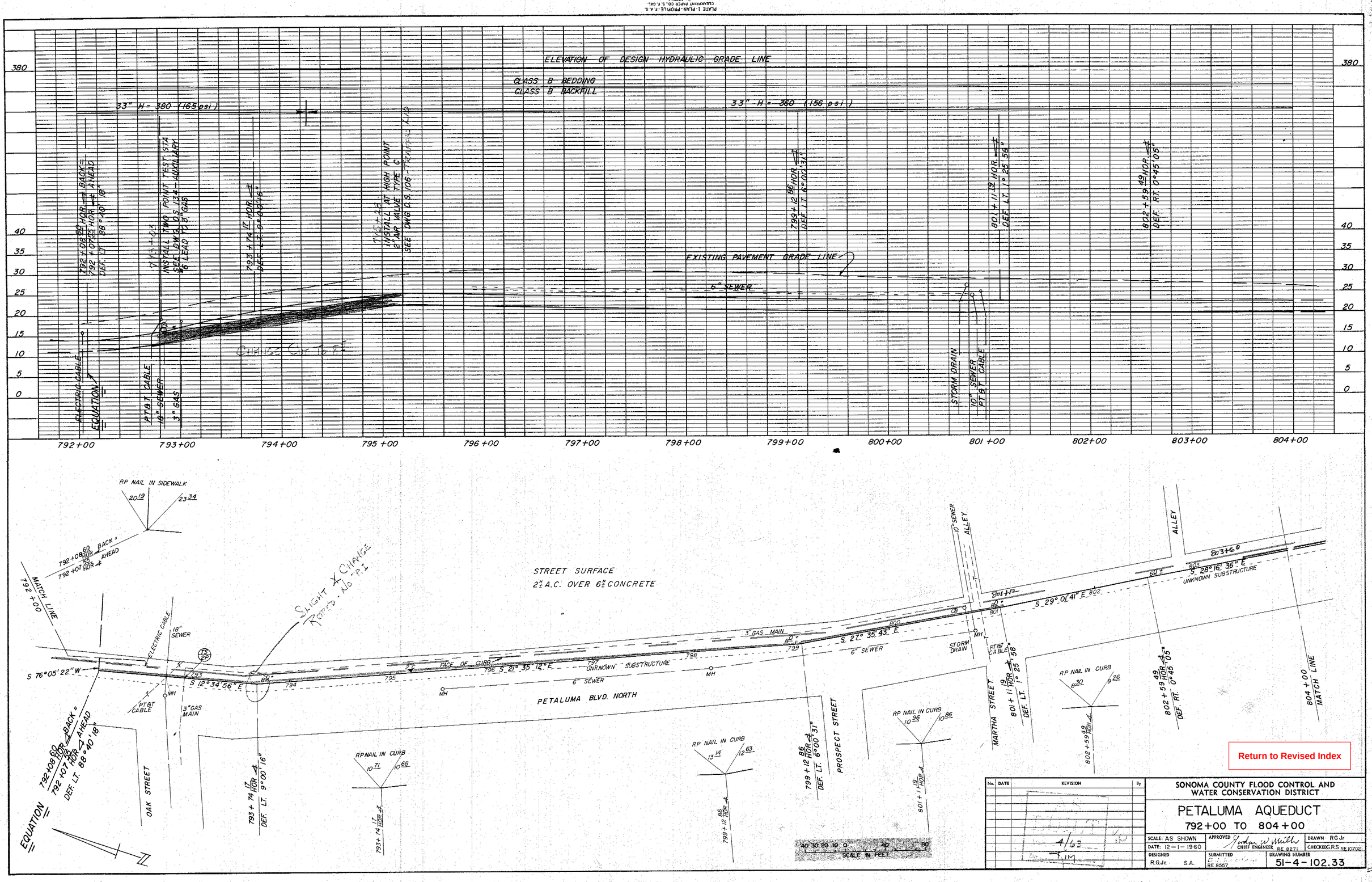

PLATE 1-PLAN-PROFILE-F.A.S.
CLEARPRINT PAPER CO., S.F., CALIF.
No. 1000H-1

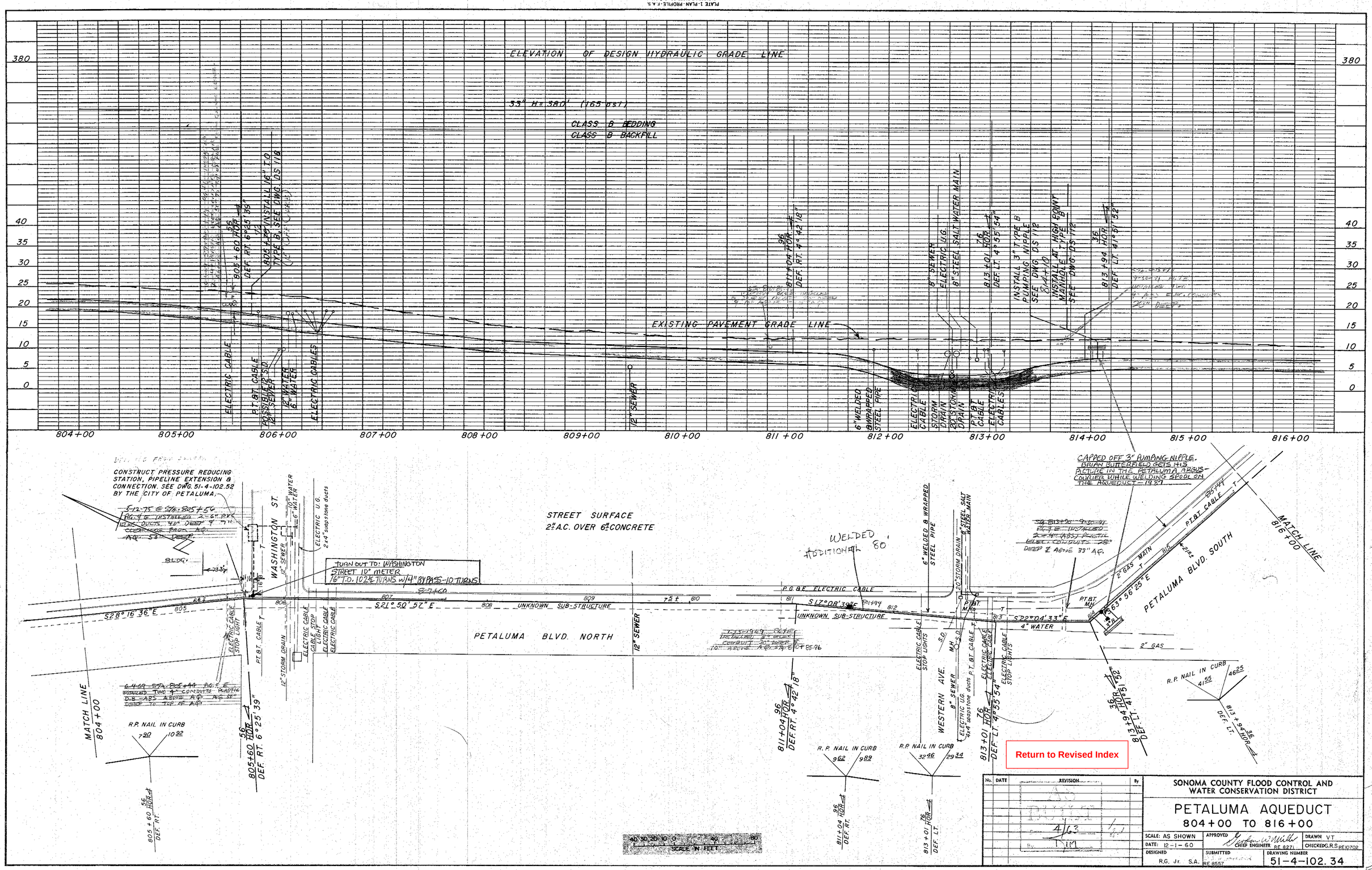

No.	DATE	REVISION	By

SONOMA COUNTY FLOOD CONTROL AND WATER CONSERVATION DISTRICT

PETALUMA AQUEDUCT
804+00 TO 816+00

SCALE: AS SHOWN	APPROVED Gordon W. Mills CHIEF ENGINEER RE 8271	DRAWN VT	
DATE: 12-1-60		CHECKED G.R.S. RE 10702	
DESIGNED R.G. Jr. S.A.	SUBMITTED RE 8557	DRAWING NUMBER 51-4-102.34	

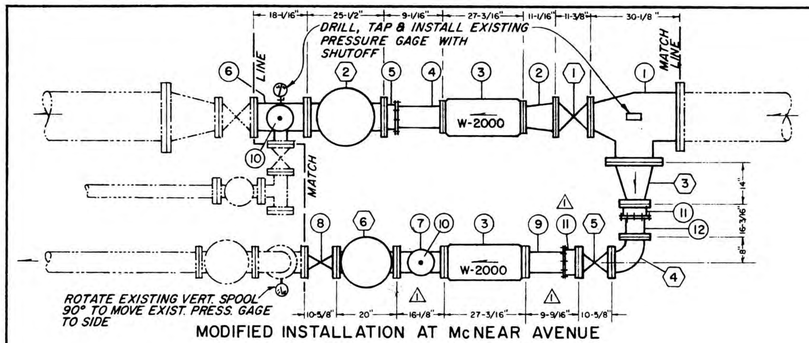

MODIFIED INSTALLATION AT McNEAR AVENUE

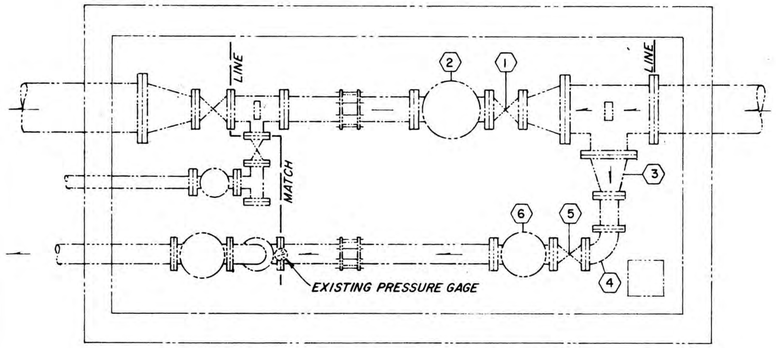

EXISTING FACILITY AT McNEAR AVENUE

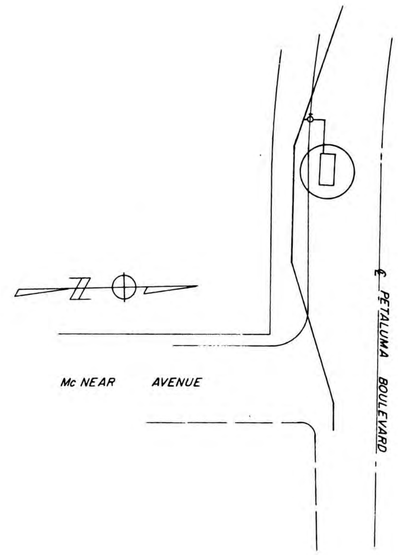

McNEAR AVENUE

	SCHEDULE OF ITEMS (FROM GENERAL STOCK)
1	16"x8"x12" TEE
2	8"x6" REDUCER
3	6" ROCKWELL METER W-2000 (2 REQ'D)
4	6" NIPPLE, LENGTH TO SUIT F.O.E./P.O.E.
5	8" FLANGED x PLAIN END FLANGED COUPLING ADAPTOR SMITH-BLAIR No. 913-8-663
6	8"x8"x4"x4" SIDE OUTLET TEE
7	6"x6"x4" TEE
8	6" GATE VALVE
9	6" NIPPLE, LENGTH TO SUIT F.O.E./P.O.E.
10	4" BLIND FLANGE (2 REQ'D)
11	6" FLANGE x PLAIN END FLANGED COUPLING ADAPTOR SMITH-BLAIR No. 912-6-690 (2 REQ'D)
12	6" NIPPLE, LENGTH TO SUIT F.O.E./P.O.E.

	SCHEDULE OF ITEMS (AT SITE IN EXISTING INSTALLATION)
1	8" GATE VALVE
2	8" PRESSURE REDUCER
3	12"x6" REDUCER
4	6"x6" 90° ELL
5	6" GATE VALVE
6	6" PRESSURE REDUCER

PT2ME401 6" (STA. 868+61)
PT2ME402 6"

ADDED LATER:
PT2ME406 20"
PT2ME407 12"

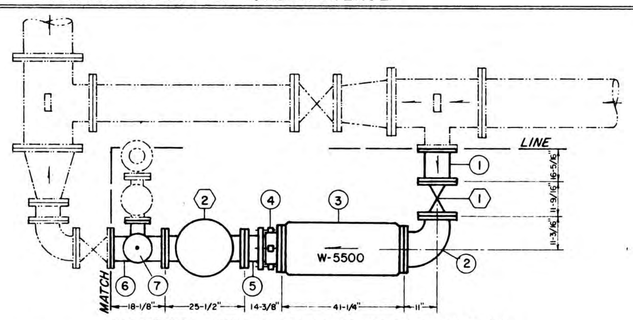

MODIFIED INSTALLATION AT WASHINGTON ST.

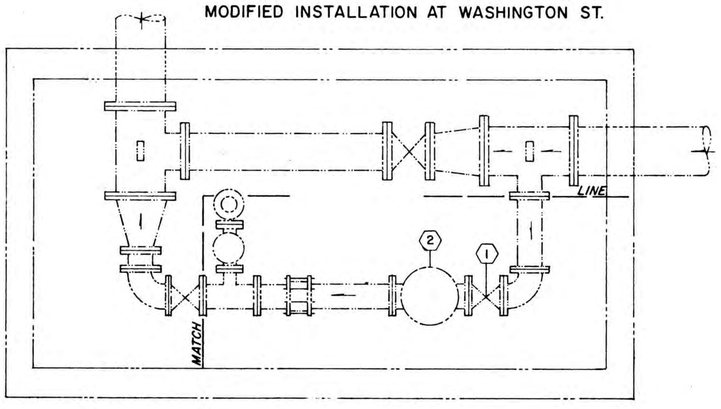

EXISTING FACILITY AT WASHINGTON ST.

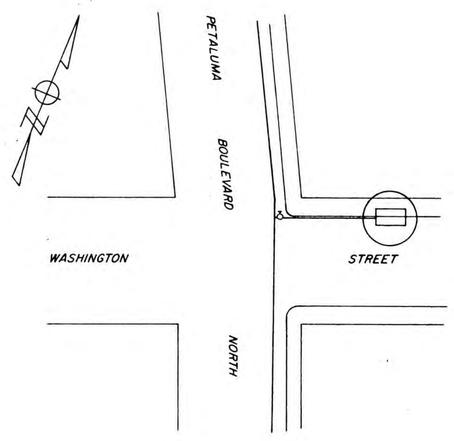

WASHINGTON STREET

	SCHEDULE OF ITEMS (FROM GENERAL STOCK)
1	8" NIPPLE, LENGTH TO SUIT F.B.E.
2	10"x8" REDUCING ELBOW
3	10" ROCKWELL METER W-5500
4	10" FLANGED x 8" PLAIN END FLANGED COUPLING ADAPTOR SMITH-BLAIR No. 914-10-863
5	8" NIPPLE, LENGTH TO SUIT F.O.E./P.O.E.
6	8"x8"x6"x4" SIDE OUTLET TEE
7	6" BLIND FLANGE

	SCHEDULE OF ITEMS (AT SITE IN EXISTING INSTALLATION)
1	8" GATE VALVE
2	8" PRESSURE REDUCER

PT2ME391 10" (STA. 805+72)

INSTALLATION OF METERS BY SONOMA COUNTY FLOOD CONTROL & WATER CONSERVATION DISTRICT IN CITY OF PETALUMA PRESSURE REGULATING VAULTS

APPROVED D. A. Young Date 9/16/68
City Engineer, Petaluma

Return to Revised Index

No.	DATE	REVISION	By
1	9-20-68	(MODIFIED INSTALLATION AT McNEAR AVE.)	
1		DIMENSION ERROR CORRECTED, PARTS LIST	
1		REVISED	kwp

AS BUILT
Date 5-6-77
By MSA

WATER METER INSTALLATION
McNEAR AVE. AT PETALUMA BLVD. & WASHINGTON ST. AT PETALUMA BLVD.
PETALUMA

SCALE: 1/2" = 1'-0" | APPROVED Gordon W. Mills CHIEF ENGINEER | DRAWN kwp SKMc
DATE: AUG. 21, 1968 | CHECKED K.R.R.

SONOMA COUNTY FLOOD CONTROL AND WATER CONSERVATION DISTRICT

DESIGNED S.A. | SUBMITTED | DRAWING NUMBER 60-2-102.11

PRINTED ON DIEPO NO. 1028 PAPERCLOTH

PLATE 1-PLAN-PROFILE-F.A.S.
CLEARPRINT PAPER CO., S.F. CAL.
No. 1000H-1

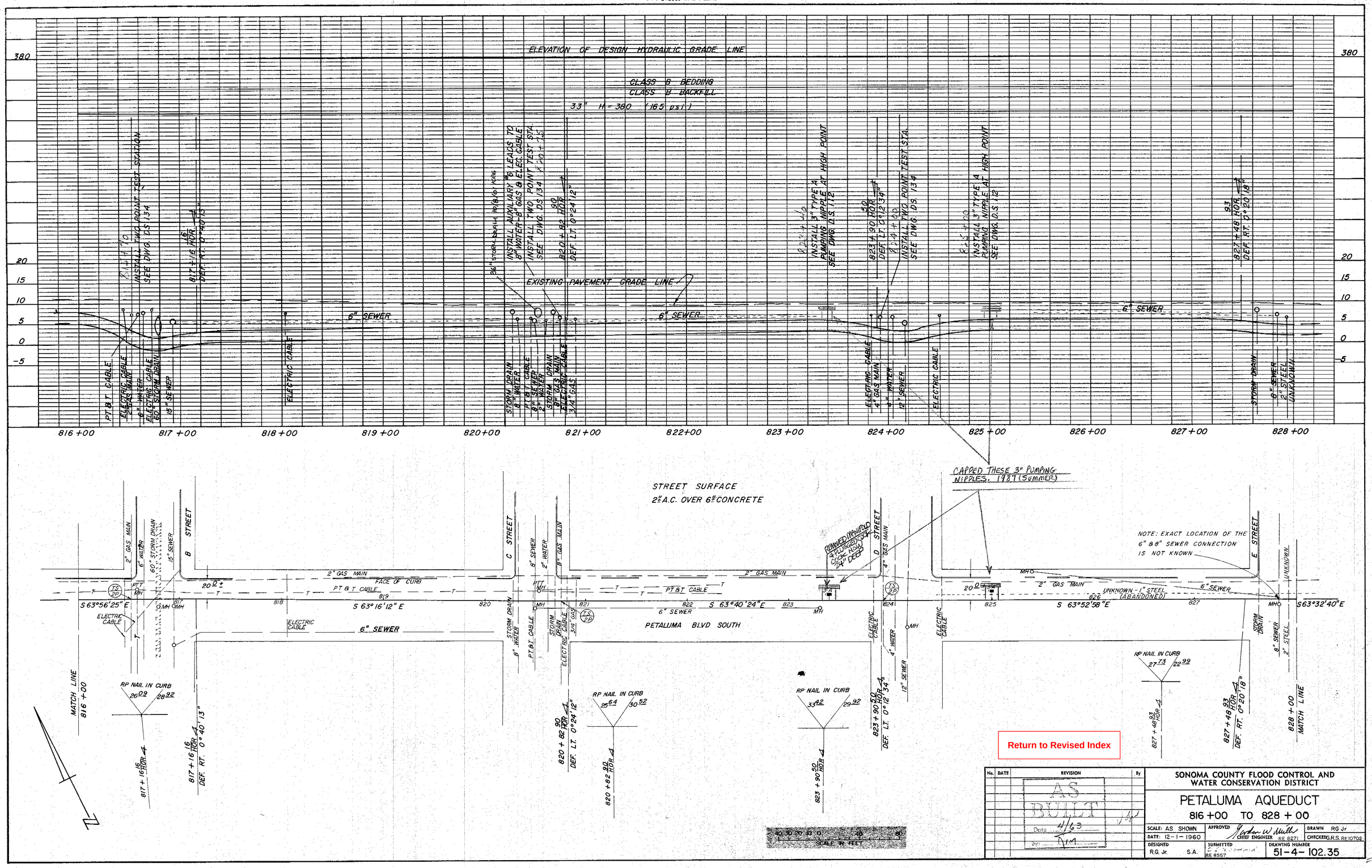

PLATE 1-PLAN-PROFILE-F.A.S.
CLEARPRINT PAPER CO., S.F. CALI.
No. 1000H-1

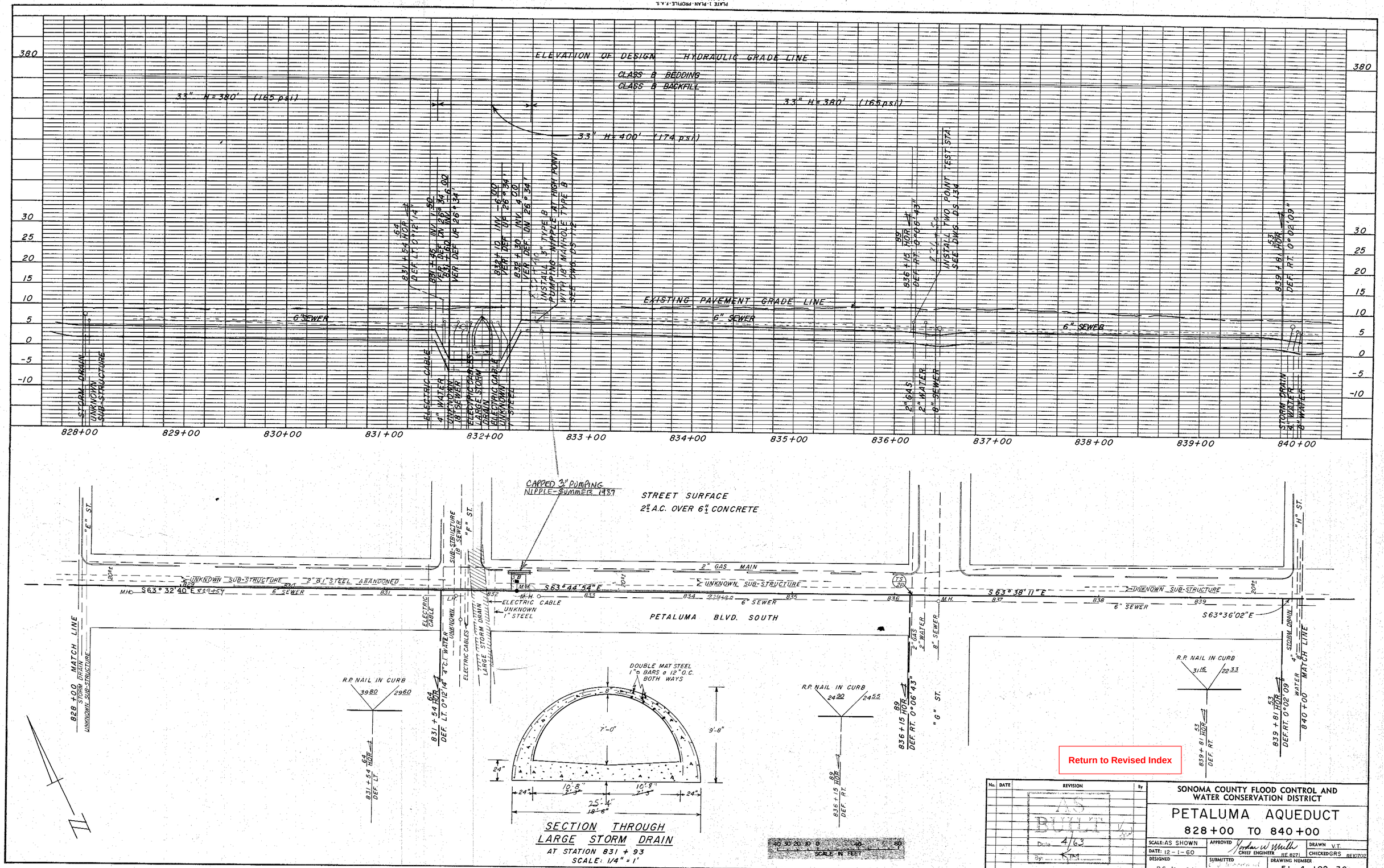

PLATE 1-PLAN-PROFILE-F.A.S.
CLEARPRINT PAPER CO., S.F. CAL.
No. 1000H-1

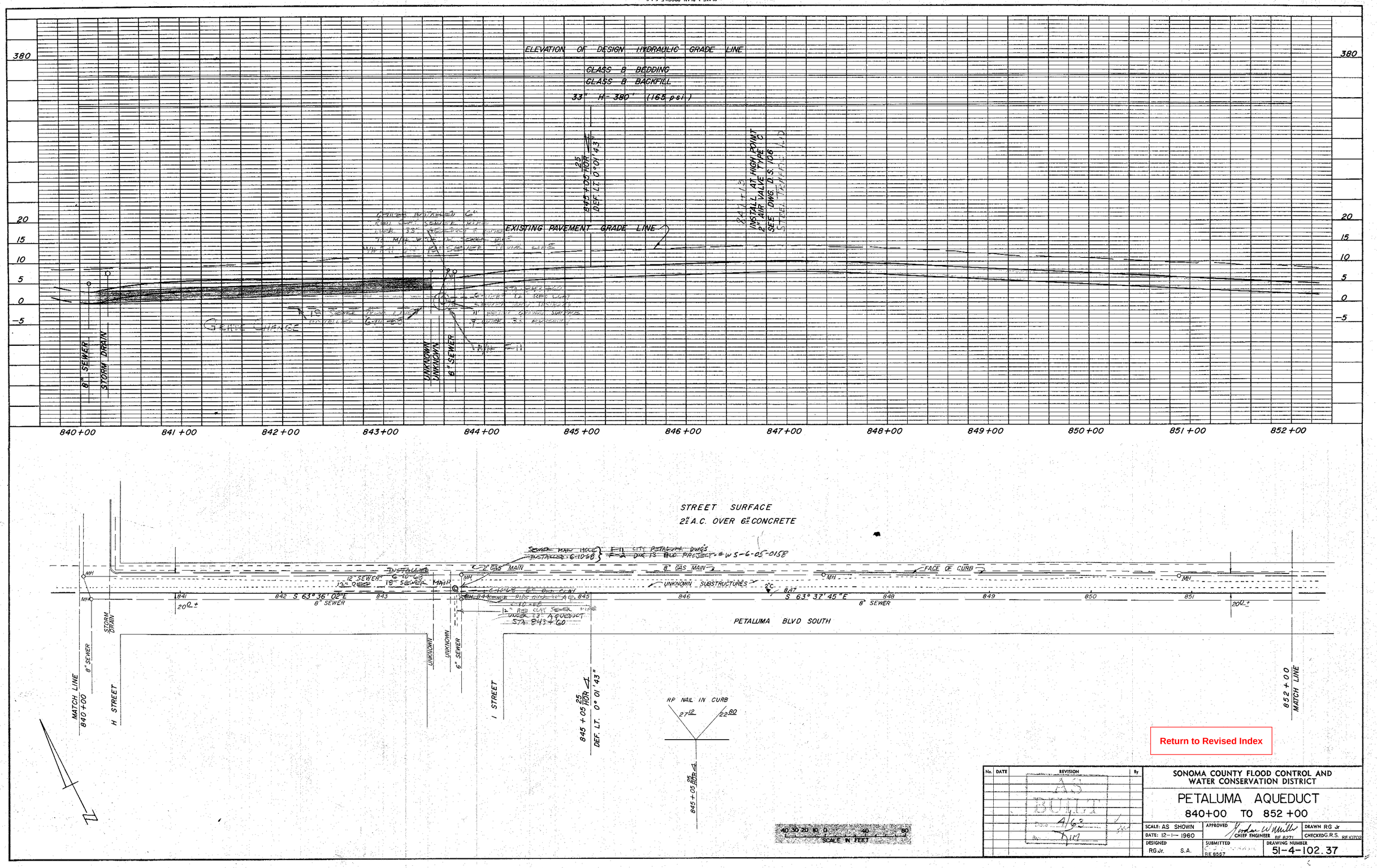

PLATE 1. PLAN-PROFILE-F.A.S.
CLEARPRINT PAPER CO., S.F. CAL.
No. 1000H-1

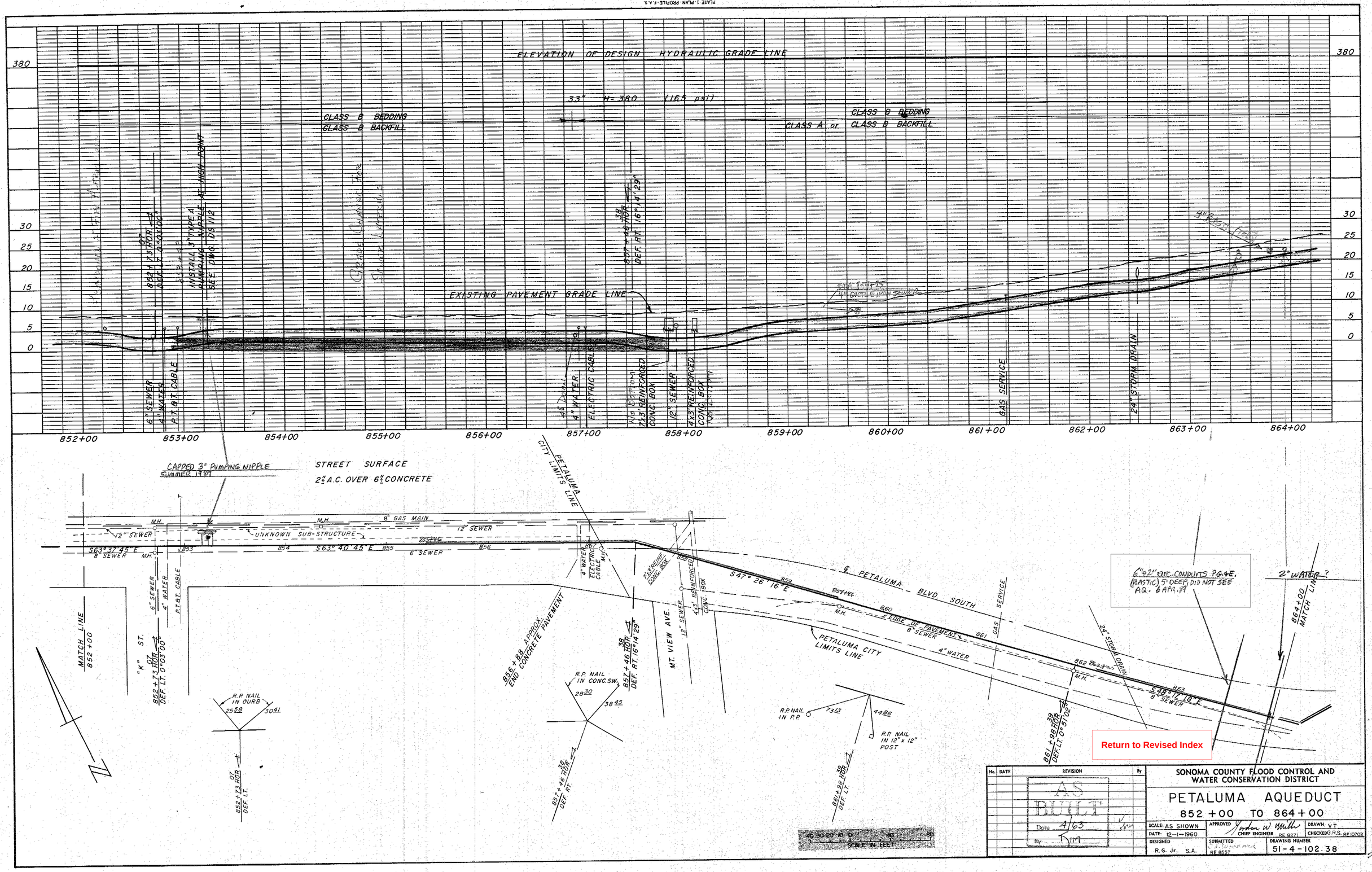

No.	DATE	REVISION	By
		AS BUILT Date 4/63 By RM	

SONOMA COUNTY FLOOD CONTROL AND WATER CONSERVATION DISTRICT

PETALUMA AQUEDUCT

852+00 TO 864+00

SCALE: AS SHOWN	APPROVED Andrew W. Miller CHIEF ENGINEER RE 8271	DRAWN V.T.
DATE: 12-1-1960		CHECKED G.R.S. RE 10702
DESIGNED R.G. Jr. S.A.	SUBMITTED RE 8557	DRAWING NUMBER 51-4-102.38

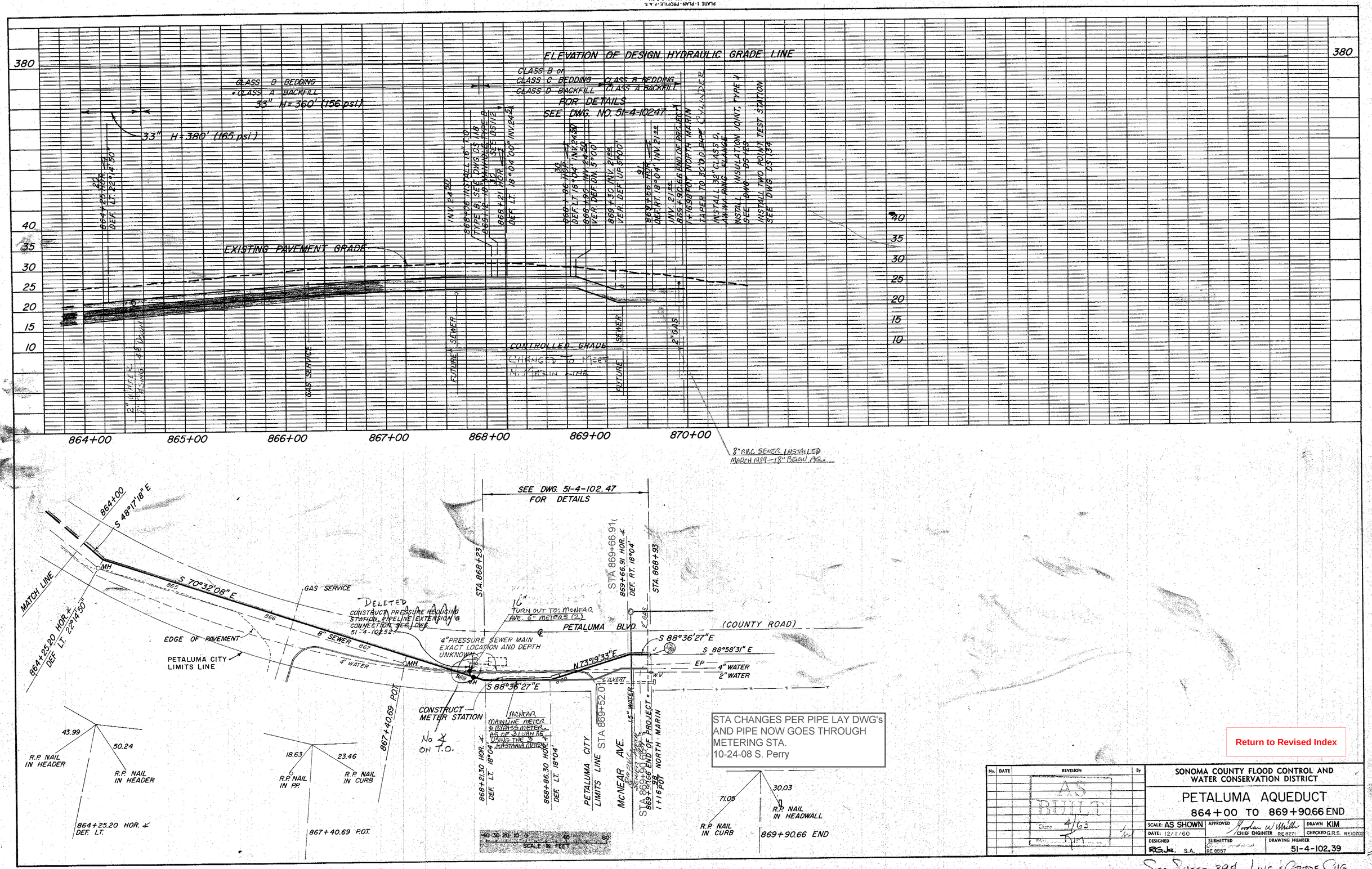

STA CHANGES PER PIPE LAY DWG's AND PIPE NOW GOES THROUGH METERING STA.
10-24-08 S. Perry

Return to Revised Index

No.	DATE	REVISION	By
		AS BUILT Date 4/63	

SONOMA COUNTY FLOOD CONTROL AND WATER CONSERVATION DISTRICT

PETALUMA AQUEDUCT
864+00 TO 869+90.66 END

SCALE: AS SHOWN	APPROVED [signature] CHIEF ENGINEER RE 8271	DRAWN KIM
DATE: 12/1/60		CHECKED G.R.S. RE 10702
DESIGNED R.G.Jr. S.A.	SUBMITTED RE 8557	DRAWING NUMBER 51-4-102.39

SEE SHEET 39A - LINE & GRADE CHG.

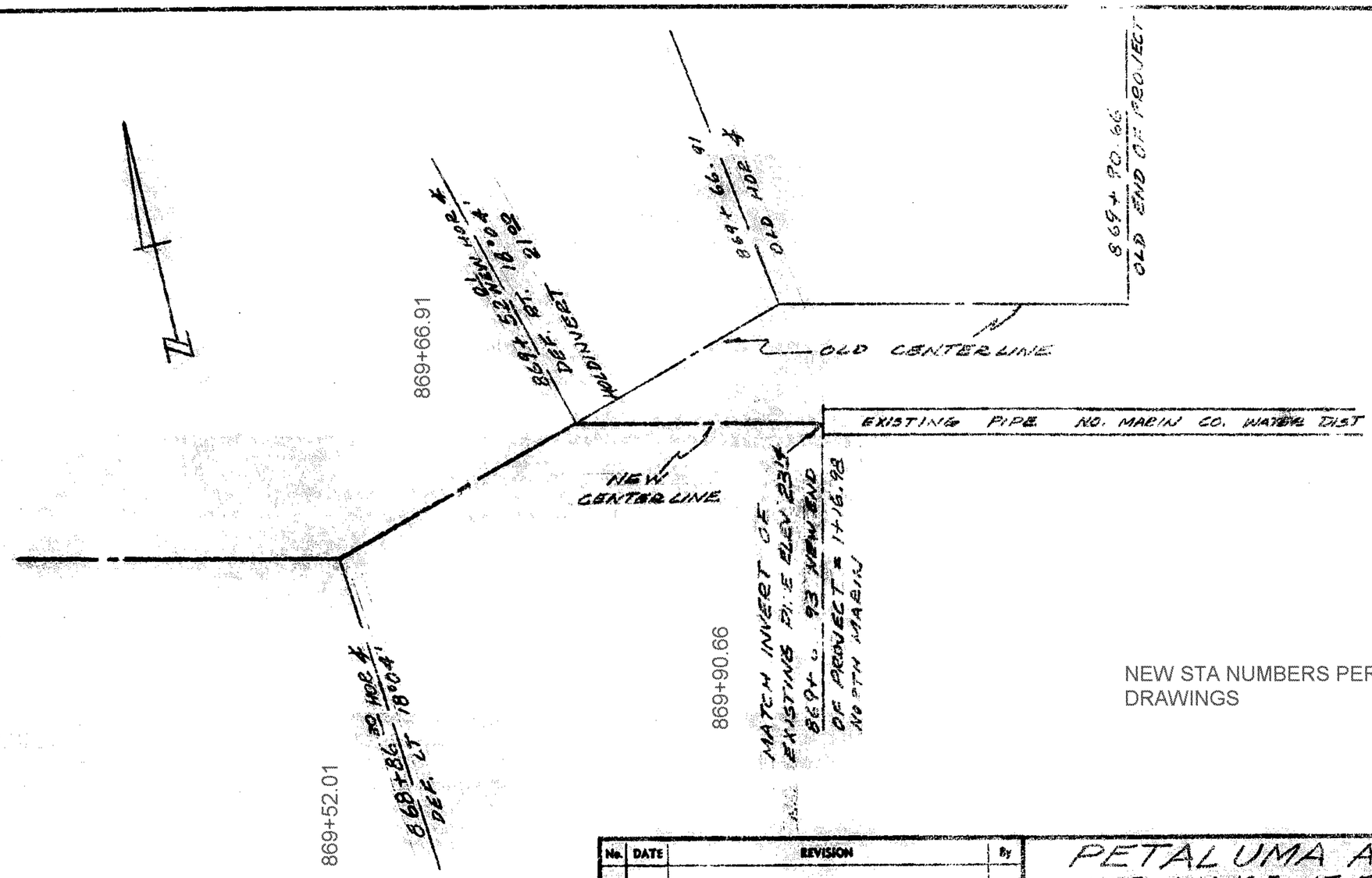

NEW STA NUMBERS PER PIPE LAY DRAWINGS

Return to Revised Index

No.	DATE	REVISION	By

PETALUMA AQUEDUCT
LINE CHANGE AT END OF PROJECT

SCALE: NONE
DATE: 6-9-61
APPROVED BY CHIEF ENGINEER
DRAWN RGJR.

SONOMA COUNTY FLOOD CONTROL AND WATER CONSERVATION DISTRICT

DESIGNED RGJR.
CHECKED O.L.W.
DRAWING NUMBER 51-4-102.39A

PRINTED ON DIEPO NO. 1000H CLEARPRINT

VIEW – A

NTS

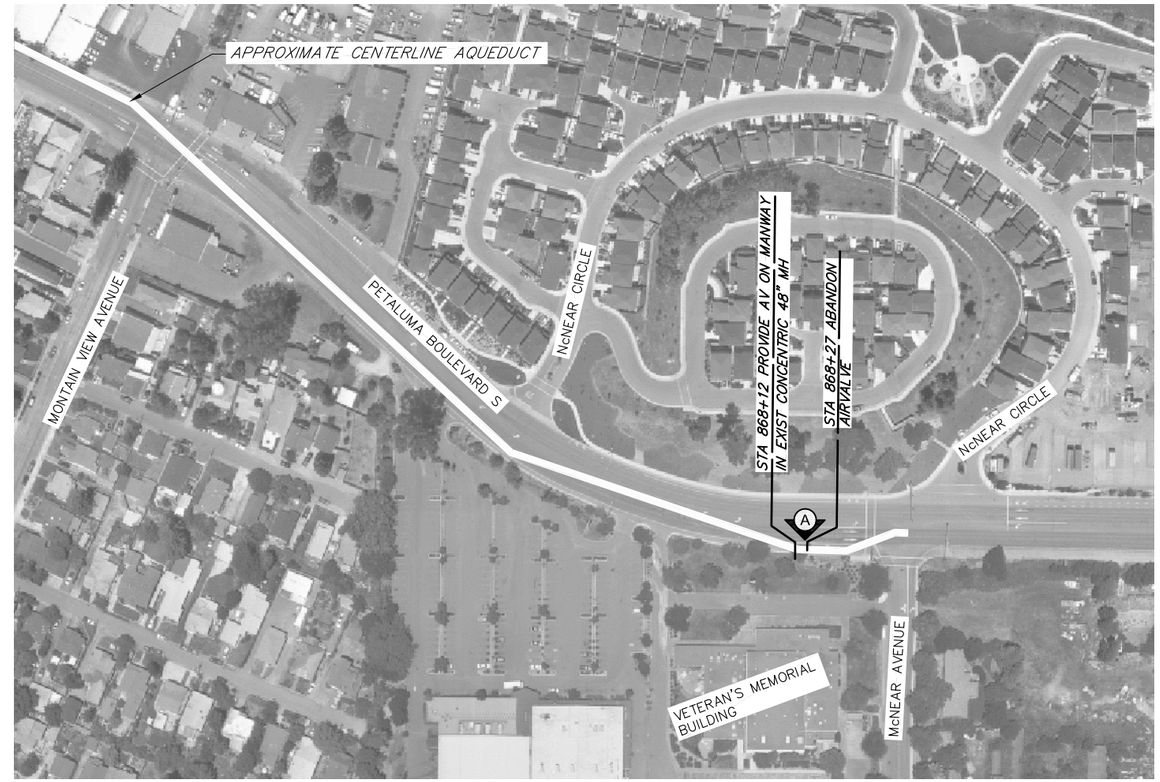

SITE PLAN

SCALE: 1" = 100'

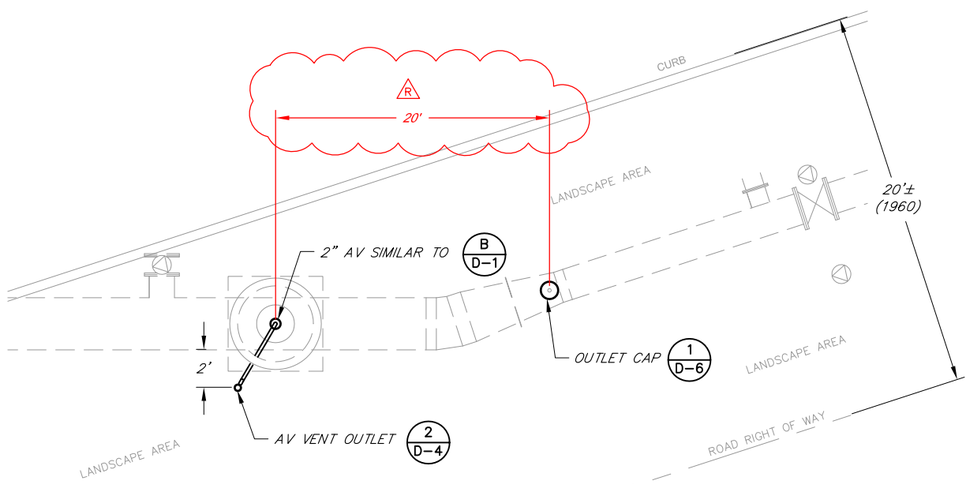

NOTE:
APPROXIMATELY 3 FEET OF COVER OVER PIPE

PARTIAL PLAN

NTS

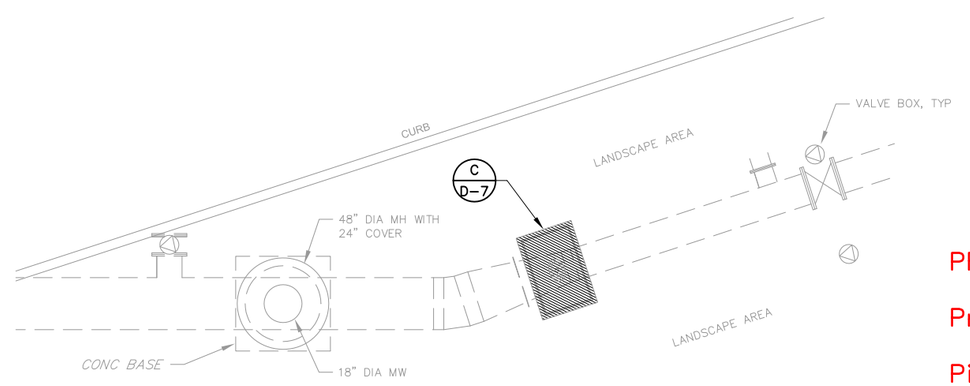

NOTE:
APPROXIMATELY 5 FEET OF COVER OVER PIPE

DEMOLITION PLAN

NTS

PROJECT RECORD DRAWING

Prepared by:

Pipeline Excavators
P.O. Box 1755
Sebastopol, Ca 95473

(707) 824–8546

January 28, 2009

Return to Revised Index

REGISTERED PROFESSIONAL ENGINEER
DALE P. ROBERTS
No. M 029944
Exp. 6/30/08
MECHANICAL
STATE OF CALIFORNIA

REGISTERED PROFESSIONAL ENGINEER
DALE P. ROBERTS
No. C 67949
Exp. 6/30/09
CIVIL
STATE OF CALIFORNIA

BAR LENGTH ON ORIGINAL DRAWING EQUALS ONE INCH, ADJUST SCALE ACCORDINGLY

NO.	DATE	REVISION	BY
	07/25/08	CONFORMED	
R	04–14–09	RECORD DRAWING ACCEPTED BY SCWA	

SONOMA COUNTY WATER AGENCY

SCALE: AS SHOWN
DATE: 28/05/2008
DRAWN: ADF
REVIEWED:

AIR VALVE UPGRADE PROJECT PHASE 1
PETALUMA AQUEDUCT
STA 868+17 SITE PLAN AND DETAILS

FILE NAME: 4078c17–24R.dwg
CONTRACT NUMBER: 60–4–7 #14

DRAWING NUMBER: C–23

SHEET 28 OF 63

\\Sd-data\Proj\water transmission\pipelines\4078_AV-Replacement\4078_record-dwgs\4078c17-24R.dwg

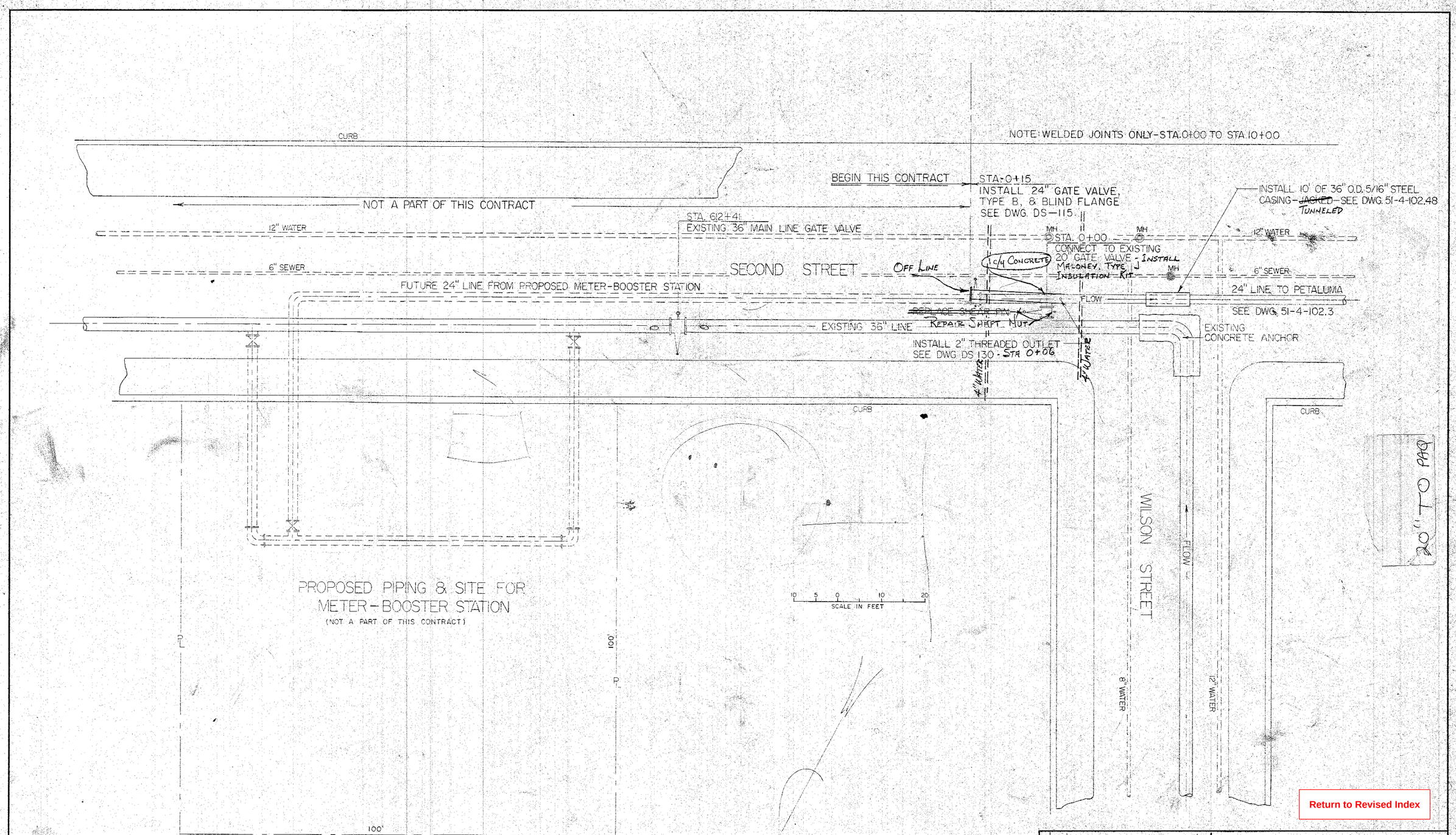

Return to Revised Index

No.	DATE	REVISION	By
		AS BUILT Date 4/63 By: KM	

PETALUMA AQUEDUCT
STA. 0+00 —— TURNOUT DETAILS

SCALE: AS SHOWN | APPROVED: CHIEF ENGINEER RE 8271 | DRAWN KIM
DATE: 12-1-1960 | CHECKED S.A.

SONOMA COUNTY FLOOD CONTROL AND WATER CONSERVATION DISTRICT

DESIGNED RE 10706 | SUBMITTED RE 8557 | DRAWING NUMBER 51-4-102.40

PRINTED ON DIEPO NO. 1000H CLEARPRINT

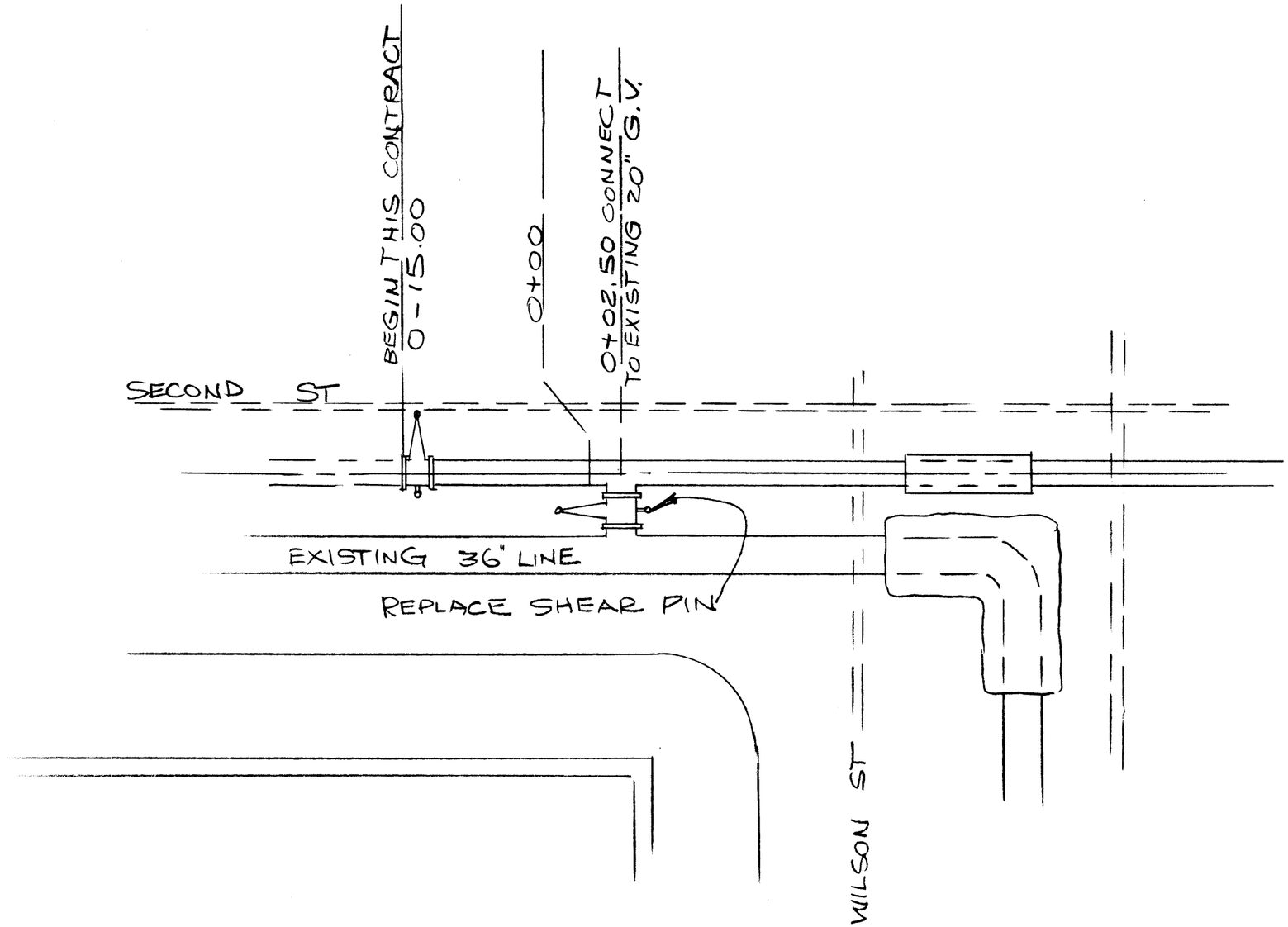

Return to Revised Index

No.	DATE	REVISION	By

PETALUMA AQUEDUCT

CORRECT LOCATION OF 20" TURNOUT AT 2ND & WILSON ST

SCALE: 1" = 10'

DATE: 2-20-61

APPROVED CHIEF ENGINEER

DRAWN RGJR

SONOMA COUNTY FLOOD CONTROL AND WATER CONSERVATION DISTRICT

DESIGNED O.L.W.

CHECKED

DRAWING NUMBER 51-4-102.40A

PRINTED ON DIEPO NO. 1000H CLEARPRINT

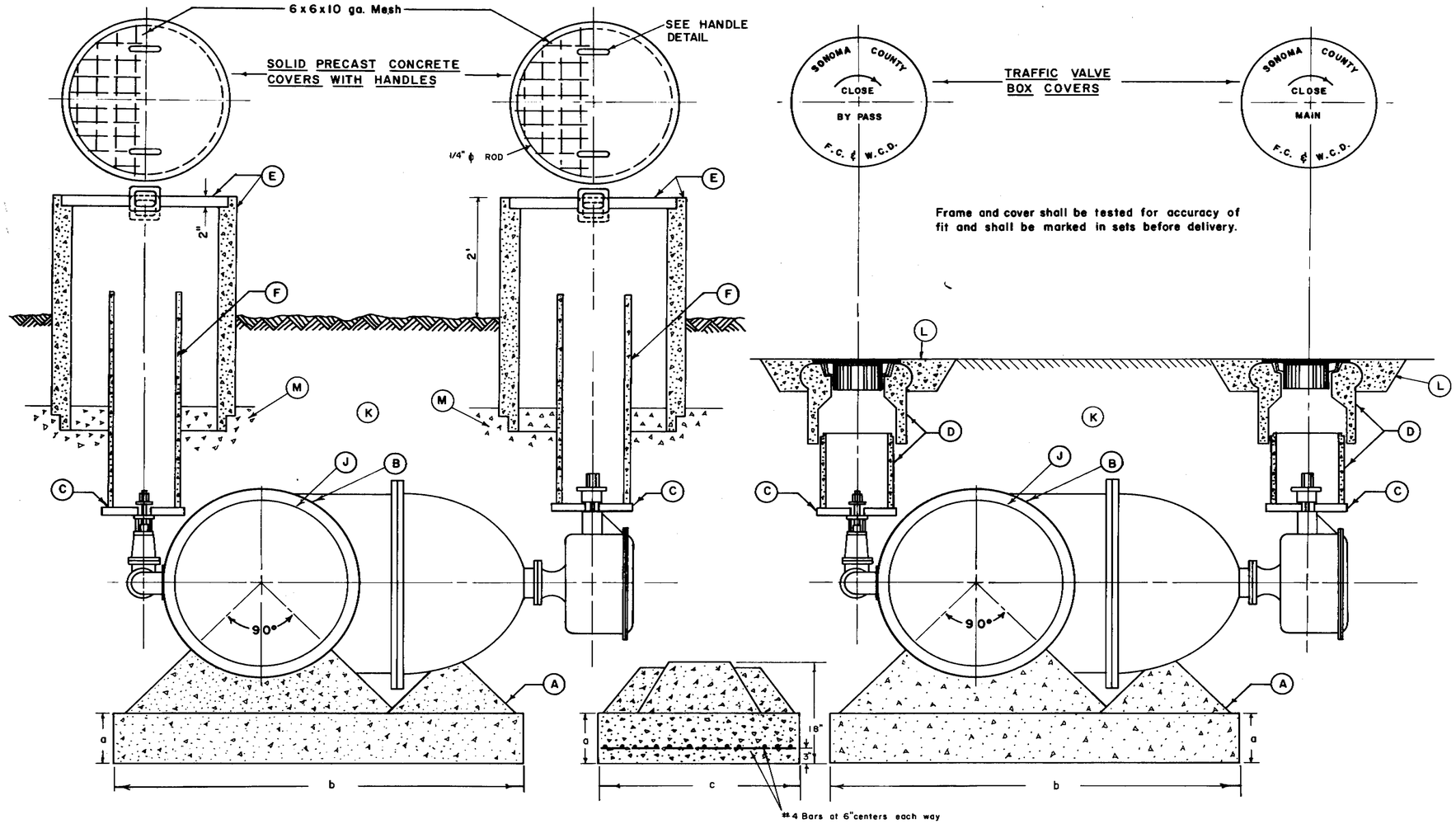

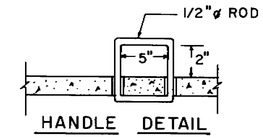

TYPE A
GATE VALVE INSTALLATION

TYPE B
GATE VALVE INSTALLATION

M	Drain rock
L	Concrete base to support traffic valve box 24" x 24" x 6"
K	Sand backfill to 12" over top of valve. Continue backfill and compaction as required for location. See Dwg. DS-114.
J	Install, both sides of valve Maloney or equal Flange insulation, type E. Neoprene faced insulation. Reference drawing DS-129.
H	DELETED
F	Traffic valve box extension pipe
E	24" Concrete irrigation pipe and concrete cover
D	Valve box, I-G1 traffic valve box, with cast iron cover and extension, George P. Forni, Inc. or approved equal
C	Concrete base
B	Flanged gate valve, Rensselaer, list 13 A or approved equal
A	Concrete Pedestal - Class B

TABLE I

DIMENSIONS OF CONCRETE PEDESTAL

DIMENSIONS / VALVE DIAMETER	a	b	c	STEEL	CUBIC YARDS
16" & 18"	6"	4'-0"	2'-6"	# 4 @ 6"	.19 Cu. Yds.
20"	9"	4'-6"	3'-0"	# 4 @ 6"	.38 Cu. Yds.
24"	9"	5'-0"	3'-6"	# 4 @ 6"	.50 Cu. Yds.
30"	9"	6"-0"	4'-0"	# 4 @ 6"	.67 Cu. Yds.

NOTES:
1. CONCRETE COATED STEEL PIPE: APPLY 2 COATS BITUMASTIC NO 50, WRAP WITH 18 GA. STUCCO NETTING AND PLASTER WITH 1:3 MIX 1" THICK
2. COAL TAR COATED STEEL PIPE: APPLY 2 COATS BITUMASTIC NO 50
3. TRANSITE PIPE: WRAP WITH 18 GA. STUCCO NETTING & PLASTER WITH 1:3 MIX 1" THICK

Return to Revised Index

No.	DATE	REVISION	By
1	12-1-60	UPDATED	SA-GS
2	3-1-62	UPDATED	KIM

GATE VALVE INSTALLATION TYPE A AND TYPE B

SCALE: NONE | APPROVED BY: Gordon W. Miller | DRAWN BY KIM
DATE: OCT. 10, 1957 | CHIEF ENGINEER RE 8271 | REVISED KIM

SONOMA COUNTY FLOOD CONTROL AND WATER CONSERVATION DISTRICT

DESIGNED Glen K. Simpson RE 10702 | CHECKED M. Jerdis R.E. 10578 | DRAWING NUMBER DS-115

PRINTED ON NO. 1000H CLEARPRINT

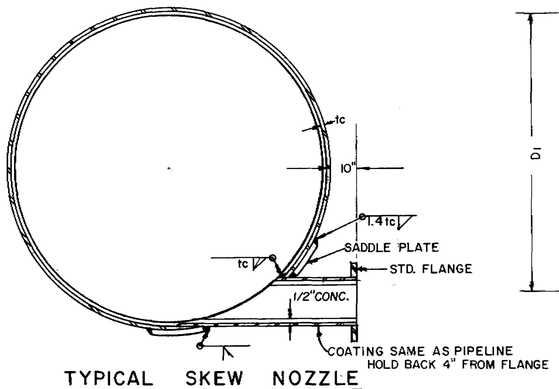

TYPICAL SKEW NOZZLE

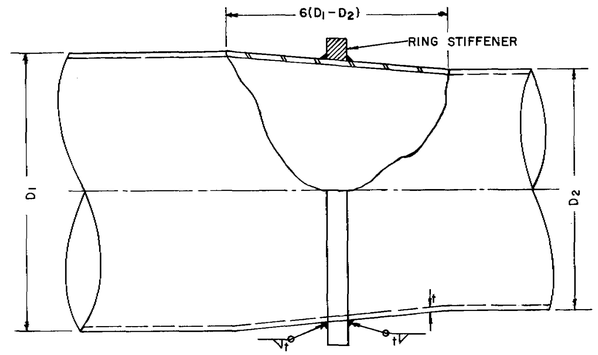

TYPICAL PIPE TAPER

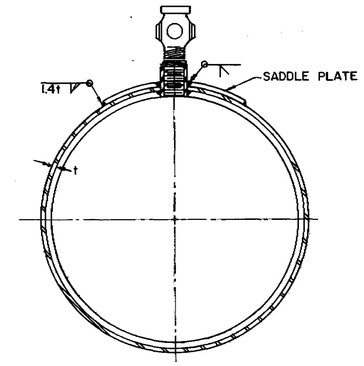

TYPICAL THREADED OUTLET

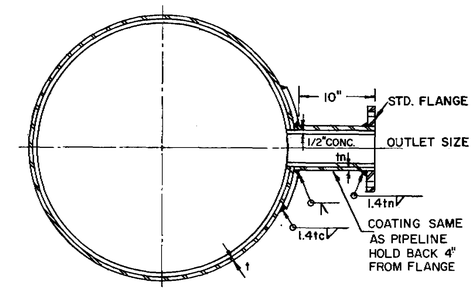

TYPICAL SADDLE NOZZLE

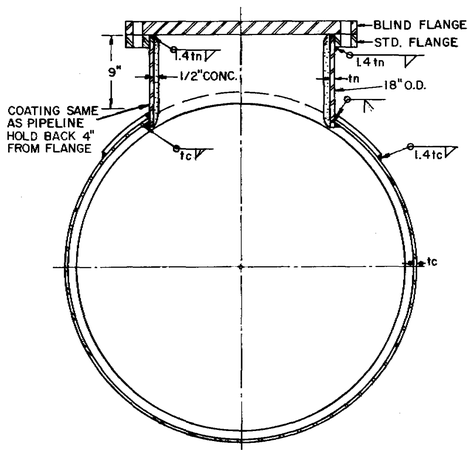

TYPICAL MANHOLE

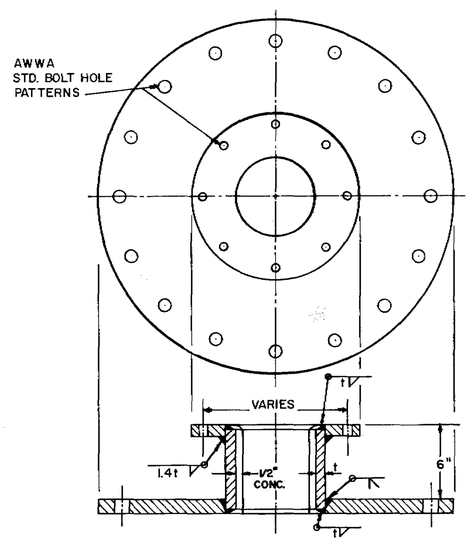

TYPICAL REDUCING FLANGE FOR AIR VALVES

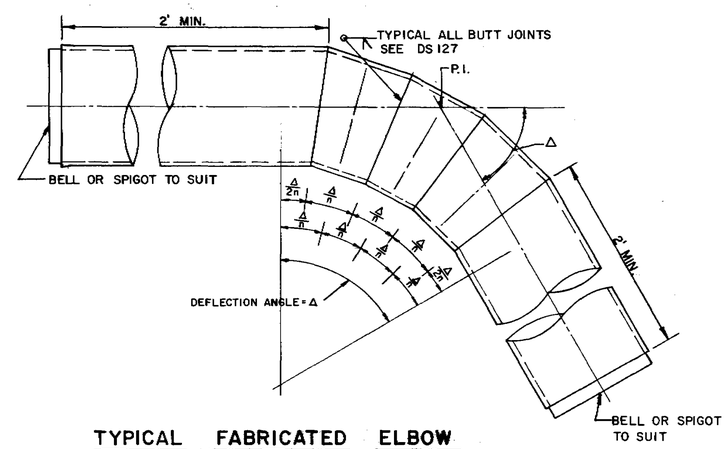

TYPICAL FABRICATED ELBOW

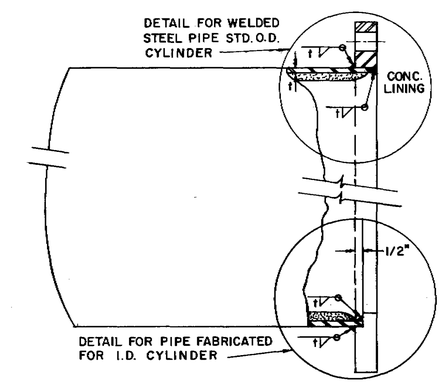

TYPICAL MAIN LINE FLANGE

1. RADIUS OF CURVE TO BE NO LESS THAN 2-1/2 TIMES THE DIA. OF PIPE.
2. Δ/n LIMITED TO 15% MAX.
3. n = NUMBER OF ANGLE JOINTS IN BEND
4. ALL CUT SECTIONS TO BE EQUAL LENGTH - STAGGER LONGITUDINAL JOINTS.

GENERAL NOTES:

1. SPECIAL FITTINGS ON THIS DRAWING ARE SCHEMATIC IN ILLUSTRATING THE TYPES OF SPECIAL CONNECTIONS IN THIS PROJECT.
2. CONTRACTOR SHALL BE REQUIRED TO SUBMIT SHOP DRAWINGS OF SPECIAL CONNECTIONS FOR THE TYPE OF PIPE SUBMITTED IN HIS BID FOR APPROVAL OF THE ENGINEER PRIOR TO PIPE FABRICATION.
3. FOR FLANGE, GASKET & BOLT REQUIREMENTS SEE STANDARD SPECIFICATIONS.
4. ALL NOZZLE CONNECTIONS SHALL BE MADE FROM BLACK STD. STEEL PIPE OF SUFFICIENT STRENGTH FOR THE PRESSURE AT THE LOCATION.
5. LINING AND COATING OF ALL SPECIALS AND PIPE CONNECTIONS SHALL BE THE SAME AS LINING AND COATING OF REGULAR PIPE SECTIONS.

Return to Revised Index

No.	DATE	REVISION	By
1	4/61	UPDATED & TITLE CHANGED	O.L.W.
2	3/62	UPDATED	S.M.C.

STEEL CYLINDER PIPE SPECIAL CONNECTIONS

SCALE: NONE
DATE: 12/1/60
APPROVED Gordon W. Mills CHIEF ENGINEER RE 8271
DRAWN VT
CHECKED S.A. RE 12705

SONOMA COUNTY FLOOD CONTROL AND WATER CONSERVATION DISTRICT

DESIGNED RE 10702
SUBMITTED O.L.W. RE 8557
DRAWING NUMBER DS 130

PRINTED ON DIEPO NO. 1000H CLEARPRINT

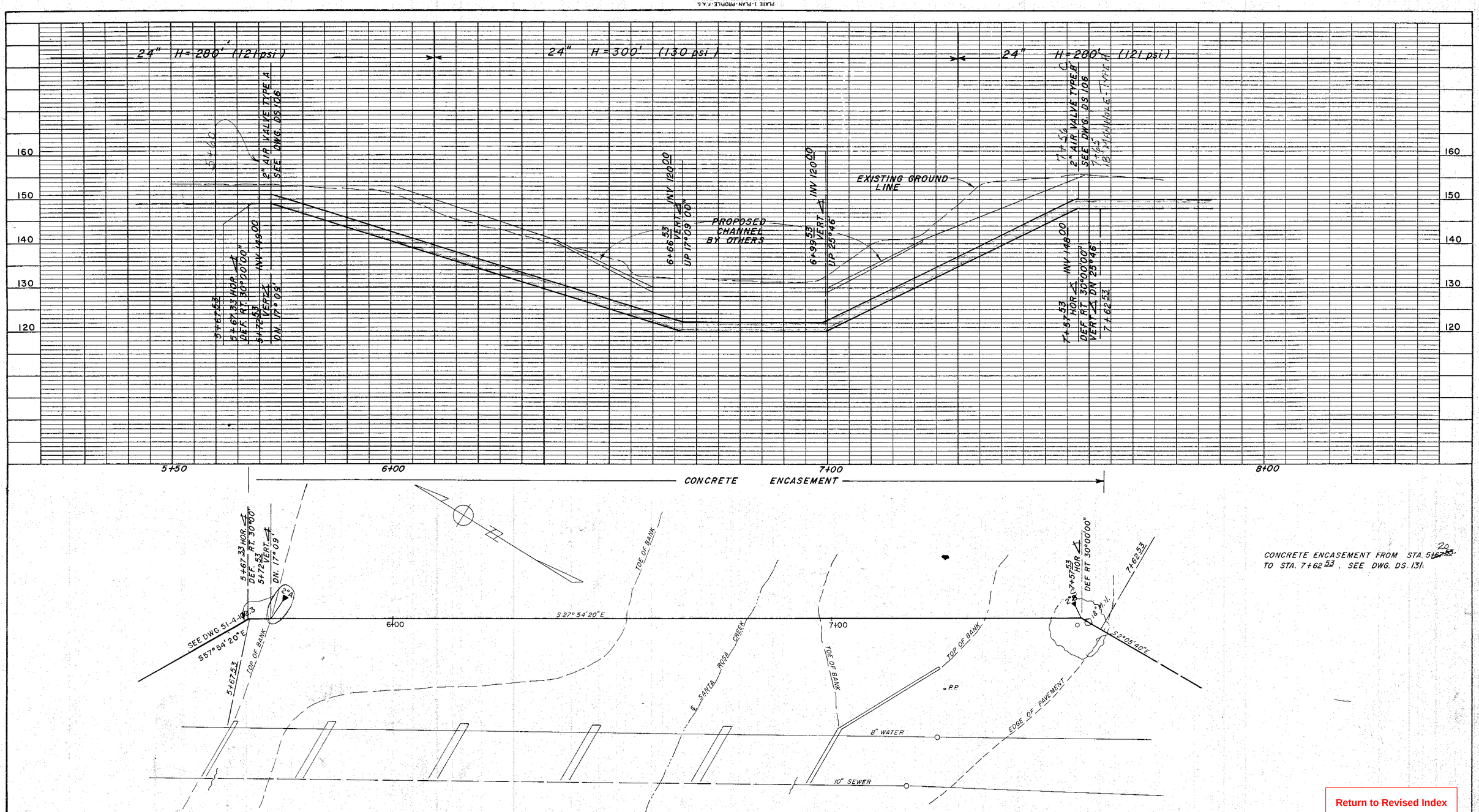

Return to Revised Index

No.	DATE	REVISION	By
		AS BUILT Date 4/63 By TIM	

SONOMA COUNTY FLOOD CONTROL AND WATER CONSERVATION DISTRICT

PETALUMA AQUEDUCT
SANTA ROSA CREEK CROSSING
5+52.53 TO 7+77.53

SCALE: AS SHOWN	APPROVED Gordon W. Mills CHIEF ENGINEER RE 8271	DRAWN K.L.L.
DATE: 12-1-1960		CHECKED G.R.S RE 10702
DESIGNED S.A. R.G. Jr.	SUBMITTED RE 8557	DRAWING NUMBER 51-4-102.41

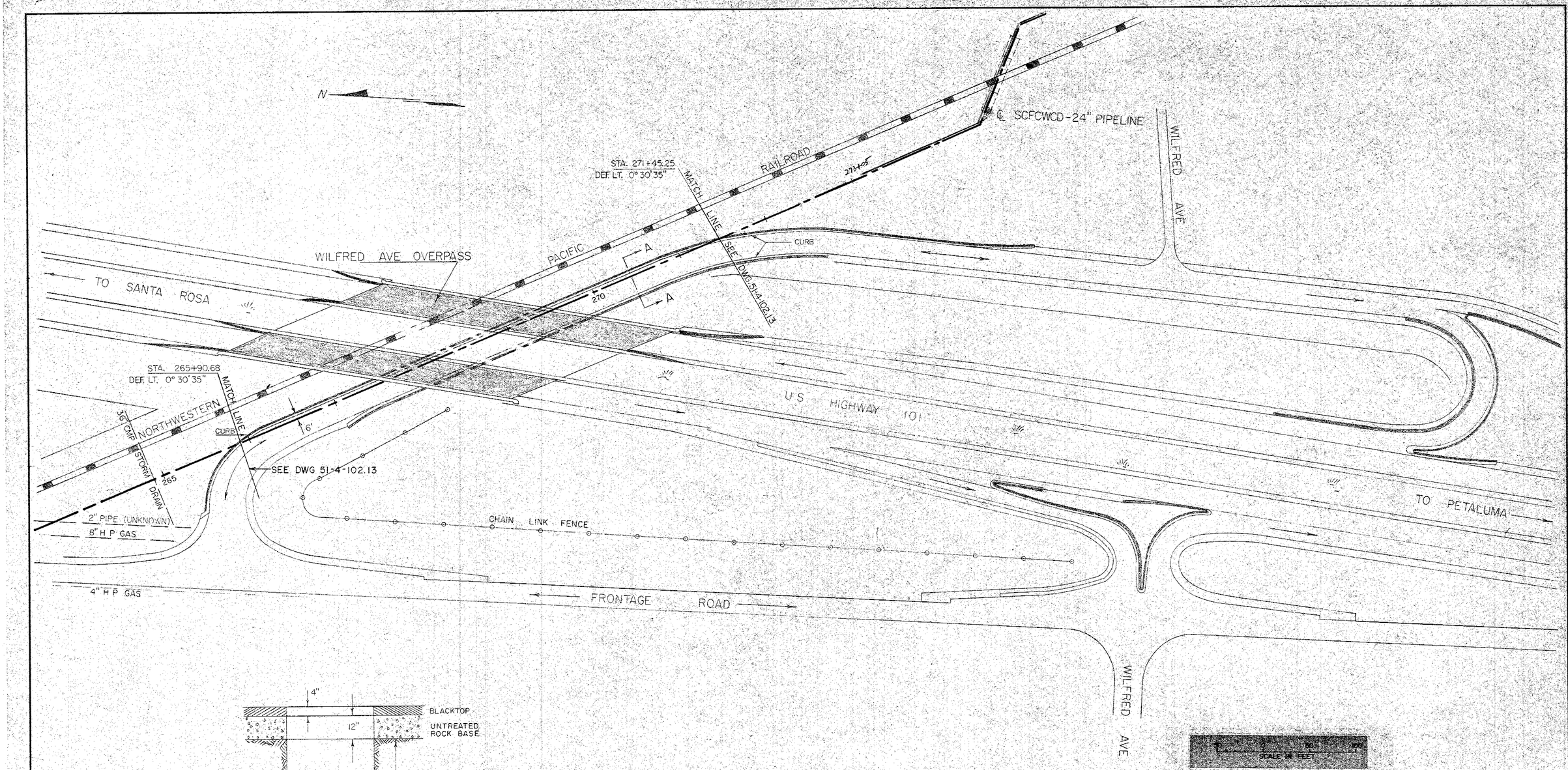

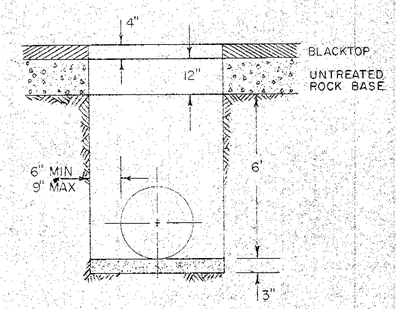

SECTION A-A
SCALE – NONE

1. ~~ALL CONTRACT WORK INCLUDING TRENCH RESURFACING BETWEEN STA. 265+90 AND STA. 271+45 SHALL BE COMPLETED WITHIN FIVE (5) WORKING DAYS.~~

2. CONTRACTOR SHALL NOTIFY THE COTATI COUNTY FIRE DISTRICT AT SWIFT 5-4242 - 24 HOURS BEFORE STARTING CONSTRUCTION AND THE CONTRACTOR SHALL MAINTAIN FREE PASSAGE OF ONE WAY TRAFFIC ~~AND SHALL PROVIDE FLAGMEN TO CONTROL ONE WAY TRAFFIC AT ALL TIMES.~~

Return to Revised Index

No.	DATE	REVISION	By
		AS BUILT Date 4/63 By KM	

PETALUMA AQUEDUCT
WILFRED AVENUE OVERCROSSING

SCALE: AS SHOWN
DATE: 12-1-1960
APPROVED: CHIEF ENGINEER R.E. 8271
DRAWN: KIM
CHECKED: G.R.S. R.E. 10102

SONOMA COUNTY FLOOD CONTROL AND WATER CONSERVATION DISTRICT

DESIGNED: R.G. Jr. S.A.
SUBMITTED: R.E. 8557
DRAWING NUMBER: 51-4-102.42

PRINTED ON DIEZO NO. 1000H CLEARPRINT

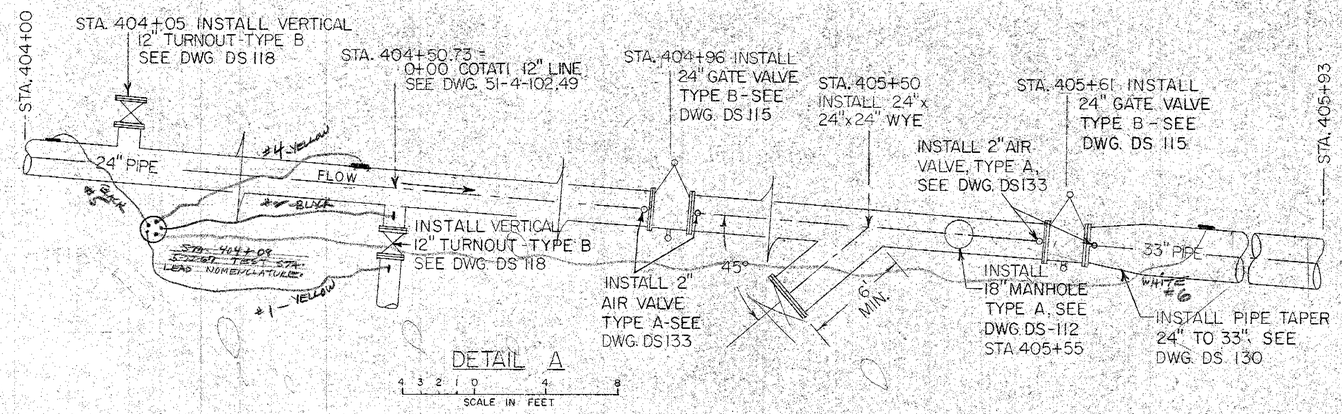

DETAIL A

4 3 2 1 0 4 8
SCALE IN FEET

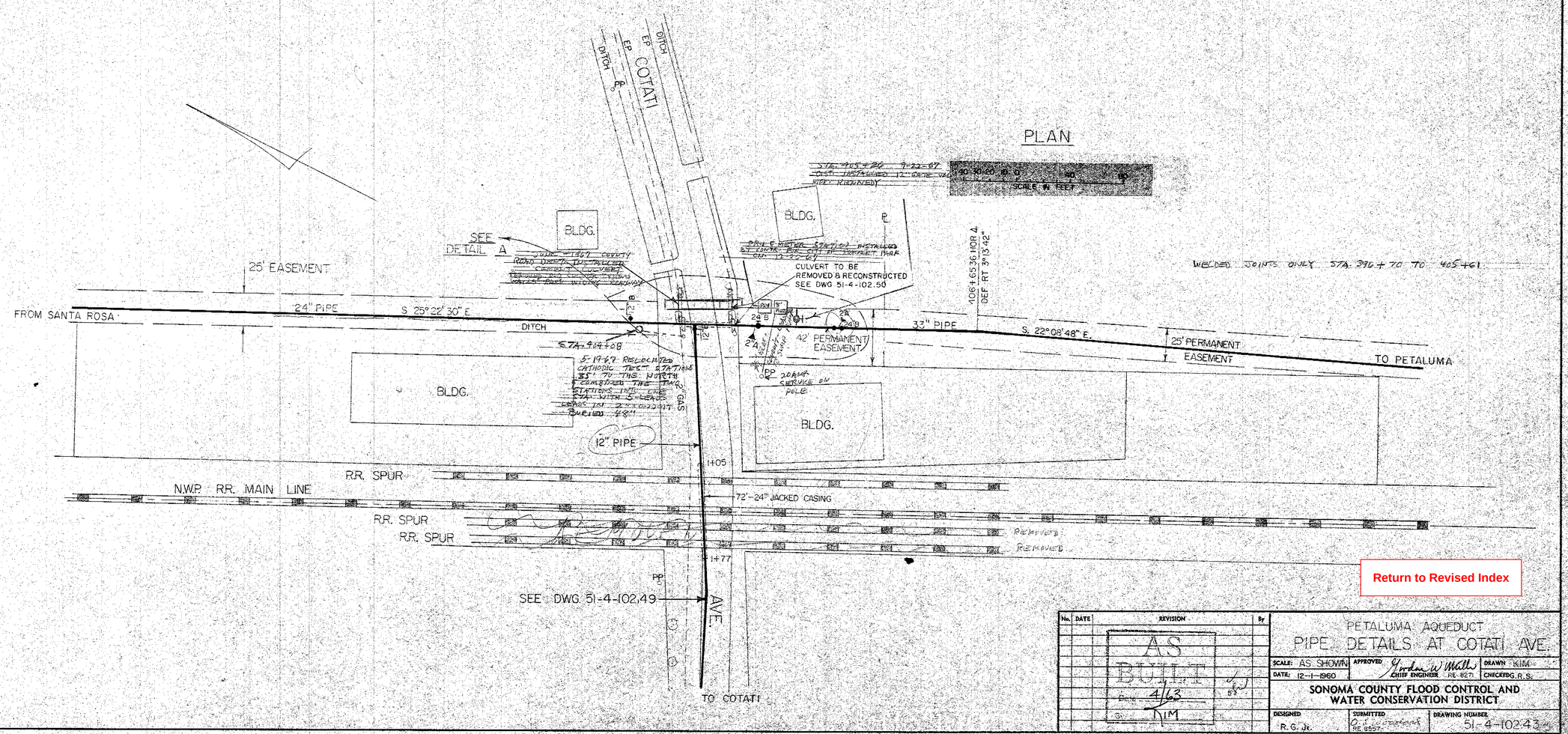

Return to Revised Index

No.	DATE	REVISION	By
		AS BUILT 4/63 JM	

PETALUMA AQUEDUCT
PIPE DETAILS AT COTATI AVE.

SCALE: AS SHOWN | APPROVED: Gordon W. Smith, CHIEF ENGINEER RE-8271 | DRAWN: KIM
DATE: 12-1-1960 | CHECKED: G.R.S.

SONOMA COUNTY FLOOD CONTROL AND WATER CONSERVATION DISTRICT

DESIGNED: R. G. Jr. | SUBMITTED: RE 8557 | DRAWING NUMBER: 51-4-102.43

PRINTED ON DIEPO NO. 1000R CLEARPRINT

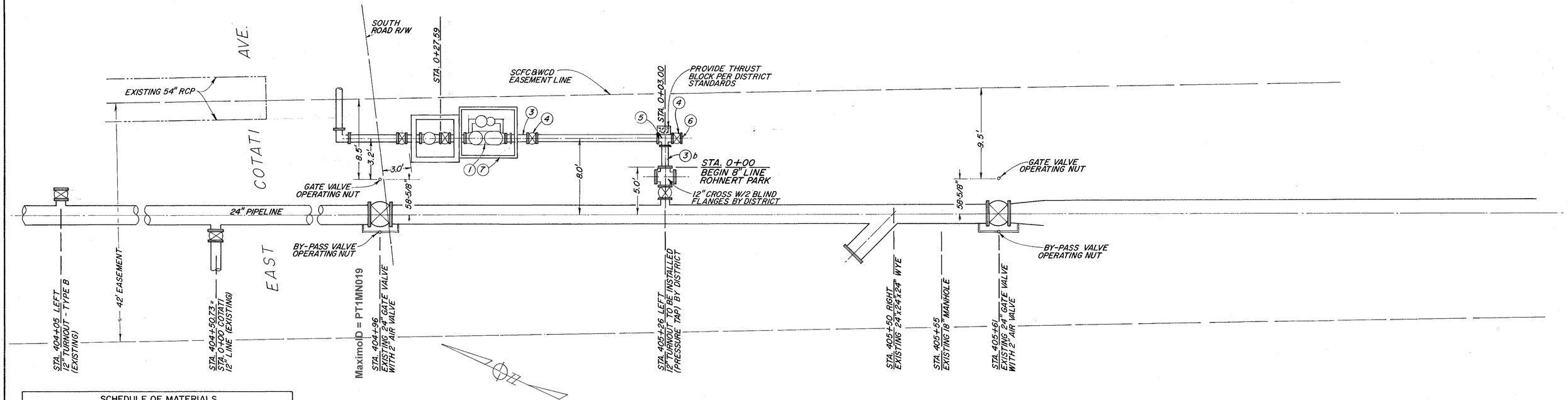

PLAN
SCALE 1" = 5'

SCHEDULE OF MATERIALS	
1.	8"x4" HERSEY MODEL FM-CT WATER METER, 1 REQ'D.
2.	8" VICTAULIC COUPLING, STYLE 31 FOR CAST IRON PIPE, 2 REQ'D.
3.	FLANGED CAST IRON SPOOLS — SEE SCHEDULE
4.	8" GATE VALVES, MUELLER A-2380 SERIES or M&H 67F WITH "O" RING SEALS OR APPROVED EQUAL. PROVIDE 2" SQUARE WRENCH NUT. REQ'D.
5.	8"x8"x8" TEE, 1 REQ'D.
6.	8" BLIND FLANGE, 1 REQ'D.
7.	BROOKS No. 857 SECTIONAL METER VAULT, 72" DEEP, WITH END WALL KNOCK OUTS OFFSET 7-1/8" FROM CENTER LINE OF VAULT. 3 PIECE 3/8" ℞ COVER (60"x84" O.A.)
8.	MARSH PRESSURE GAGE, TYPE 1, 200 p.s.i. AND SHUT OFF COCK. 2 REQ'D.
9.	CLAYTON No. 91 PRESSURE REDUCING & CHECK VALVE PRESSURE RANGE 50 — 150 p.s.i.
10.	TRAFFIC VALVE BOX WITH CAST IRON COVER. CHRISTY G1 OR APPROVED EQUAL. INSTALL PER DISTRICT STANDARDS.

NOTES:

ALL EXPOSED METAL SURFACES TO BE PAINTED IN ACCORDANCE WITH MANUFACTURERS PROCEDURE

ALL BURIED PIPING AND GATE VALVES TO BE COATED CEMENT MORTAR 1" THICK.

ALL FITTINGS FOR 150 p.s.i. WORKING PRESSURE.

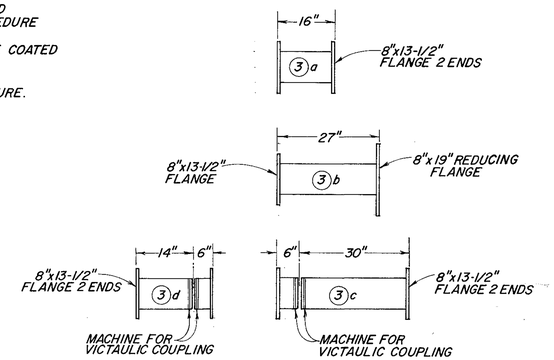

SPOOL SCHEDULE

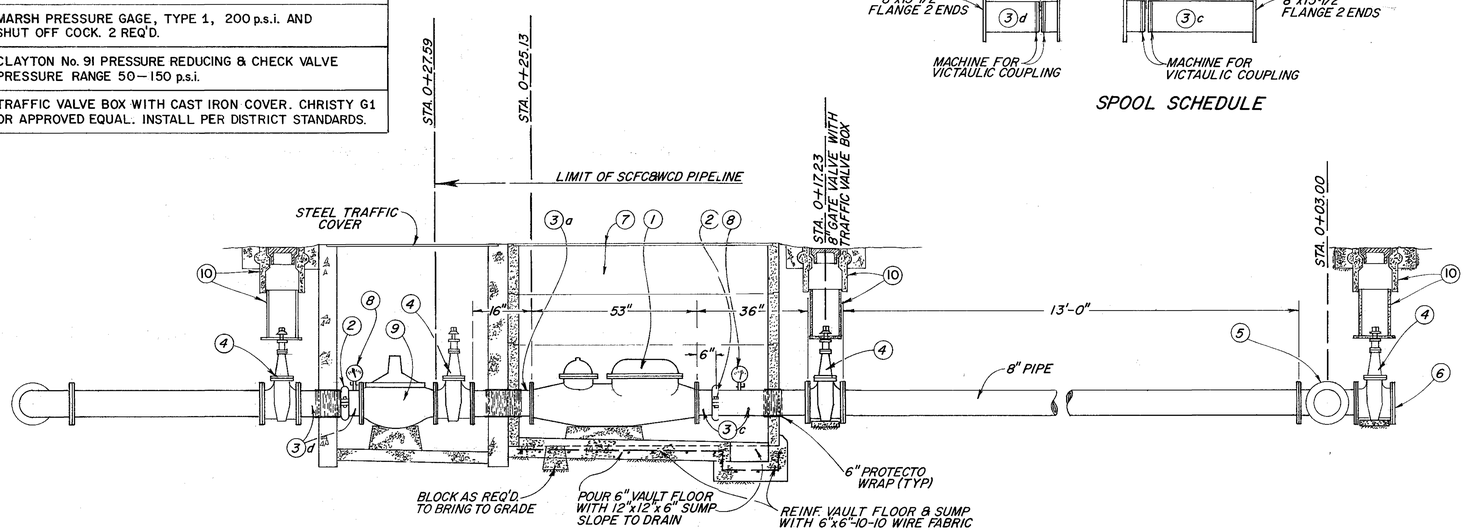

PROFILE
SCALE 1/2" = 1'

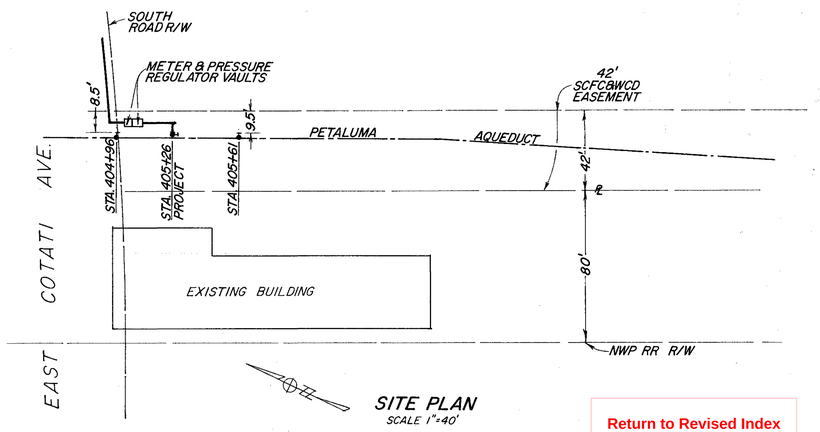

SITE PLAN
SCALE 1" = 40'

Return to Revised Index

PT1MN019 8" (STA. 404+96)

No.	DATE	REVISION	By

PETALUMA AQUEDUCT
TURNOUT & METER
FOR CITY OF ROHNERT PARK

SCALE: AS SHOWN | APPROVED | DRAWN kwp
DATE: JULY 24, 1967 | CHIEF ENGINEER | CHECKED GRS

SONOMA COUNTY FLOOD CONTROL AND WATER CONSERVATION DISTRICT

DESIGNED | SUBMITTED | DRAWING NUMBER 51-4-102.43.1

PRINTED ON DIEPO NO. 1028 PAPERCLOTH

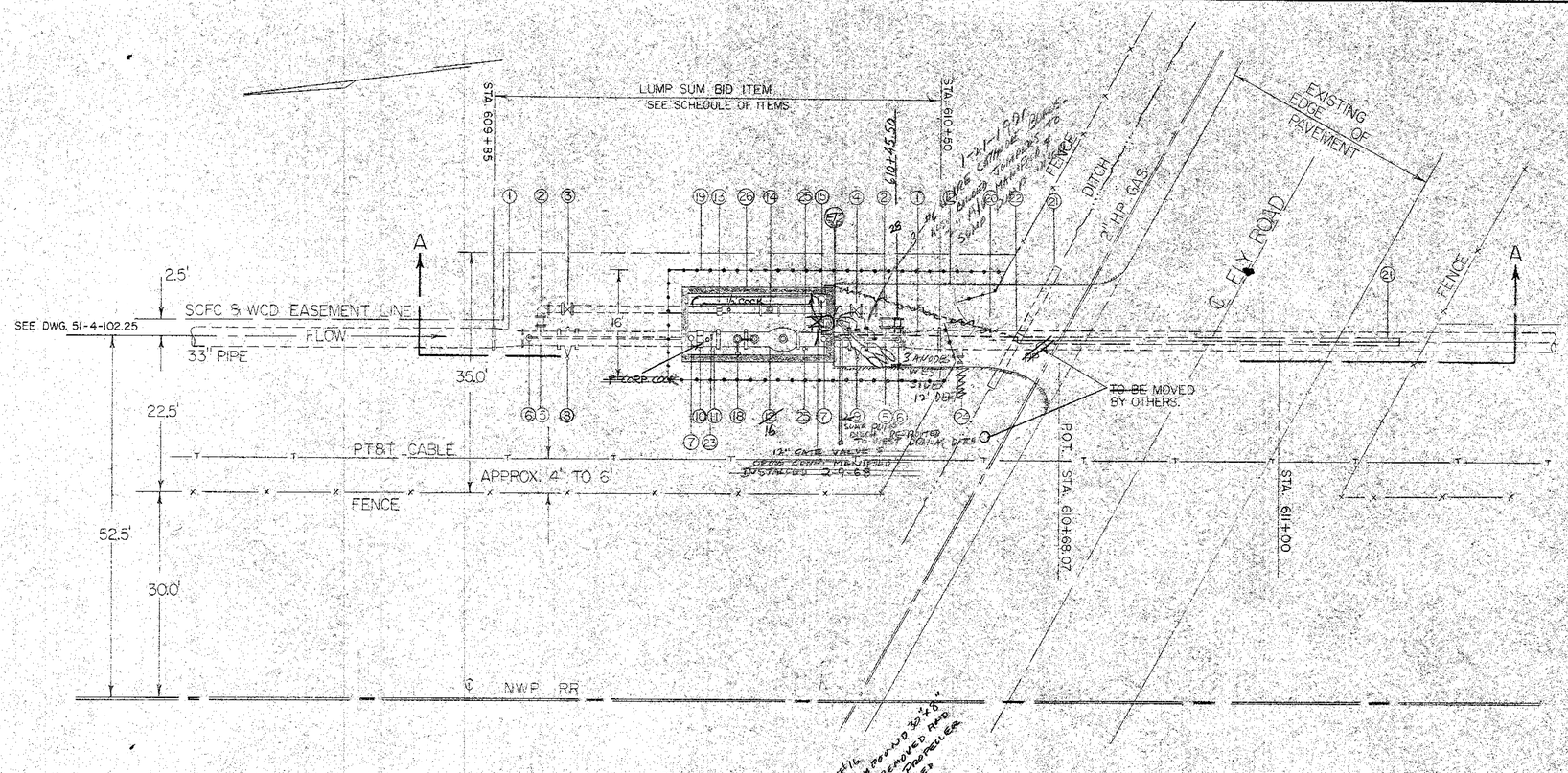

METER STATION PIPING SHALL BE COATED THE SAME AS THE MAIN PIPELINE ~~TO THE INSIDE EDGE OF THE METER VAULT. METER STATION PIPING INSIDE OF THE METER VAULT SHALL BE BARE STEEL PIPE, PAINTED PER SPECIFICATIONS.~~ DELETED

WELDED JOINTS ONLY

SCHEDULE OF ITEMS

1. TAPER 33" TO 30".
2. 12" ELBOW 90°
3. 12" GATE VALVE, TYPE A, SEE DWG. DS 115. } WITH BY-PASS
4. 12" GATE VALVE, TYPE B, SEE NOTE BELOW. } WITH BY-PASS
5. 12" SADDLE NOZZLE, SEE DWG. DS 130.
6. 2" INSUL GASKET, CORP COCK AND PIPING. *
7. 2" AIR VALVE, GATE VALVE - ANCHOR TO WALL.
8. 30" GATE VALVE, TYPE A, SEE DWG. DS 115.
9. 30" GATE VALVE, TYPE B, SEE DWG. DS 115.
10. 30" FLEXIBLE COUPLING DRESSER, STYE 38 OR APPROVED EQUAL - SEE DWG. DS 118.
11. FLANGED SPOOL.
12. DRIVEWAY - PAVE AS PER SEC. 16-27 DIST. STD. SPECS.
13. 12" FLEXIBLE COUPLING, DRESSER, STYLE 38 OR APPROVED EQUAL.
14. 12" FLANGED TYPE METER, SPARLING (cf 907) OR APPROVED EQUAL WITH 953 EXTENSION.
15. VAULT WITH LADDER, LID, & CELLAR DRAINER, SEE DWG. 51-102.44.1
16. 30" x 8" COMPOUND MAIN METER (cf 26), REGISTER EXTENTION, 246C-D, 7'-6" ± LONG FROM ℄ OF PIPE. SPARLING OR APPROVED EQUAL.
17. CONCRETE PEDESTAL SIMILAR TO PEDESTAL ON DWG. DS 118.
18. MECHANICAL TRANSMITTER & CABLE, TYPE 249BBC, CABINET & RECORDER, TYPE 216-CO. SPARLING OR APPROVED EQUAL.
19. FENCE ASSEMBLY AND 12' DOUBLE GATE, (6') APPROXIMATELY 112' ± SEE DWG. DS 123.
20. APPROX. 450 SQ. FT. DRIVEWAY - CLASS. A BACKFILL.
21. APPROX. 76 LIN. FT. 12" - 12-GA. DOUBLE DIP CMP DRAIN PIPE.
22. DRAINAGE JUNCTION BOX, NO. 5 MAE-WESTER OR APPROVED EQUAL.
23. PRESSURE GAUGE, 200 PSI, & SHUT-OFF COCK, MARSH TYPE 1, OR APPROVED EQUAL.
24. 6" TURNOUT, TYPE ~~A~~ B SEE DWG DS 118.
25. TYPICAL THREADED OUTLET WITH 1/2" BRASS BRINE COCK, CRANE 814 OR APPROVED EQUAL. SEE DWG. DS 130.
26. 35.5 CUBIC YARDS REINFORCED CONCRETE.
27. 190 SQ. FT. KLEMP METAL GRATING, TYPE KWA-4, GALVANIZED, OR APPROVED EQUAL. (NOT SHOWN - SEE DWG. 51-4-102.44.1.)

* PIPING SHALL BE 2" SCHEDULE 40 - GALV.
28. 12" TO - TYPE B (MUELLER) BY-PASS
DELETE 2 PT. TEST STA. (ITEM 5) DS 118

Return to Revised Index

No.	DATE	REVISION	By
		AS BUILT Date 4/63 By KIM	

PETALUMA AQUEDUCT
ELY ROAD METERING STATION

SCALE: AS SHOWN
DATE: 12/1/60
APPROVED: Richard Miller, CHIEF ENGINEER RE 8271
DRAWN: KIM
CHECKED: S.A.

SONOMA COUNTY FLOOD CONTROL AND WATER CONSERVATION DISTRICT

DESIGNED: RE 10708
SUBMITTED: RE 8557
DRAWING NUMBER: 51-4-102.44

PT2ME182 12" (STA. 610+20)

PRINTED ON DIEPO NO. 1006H CLEARPRINT

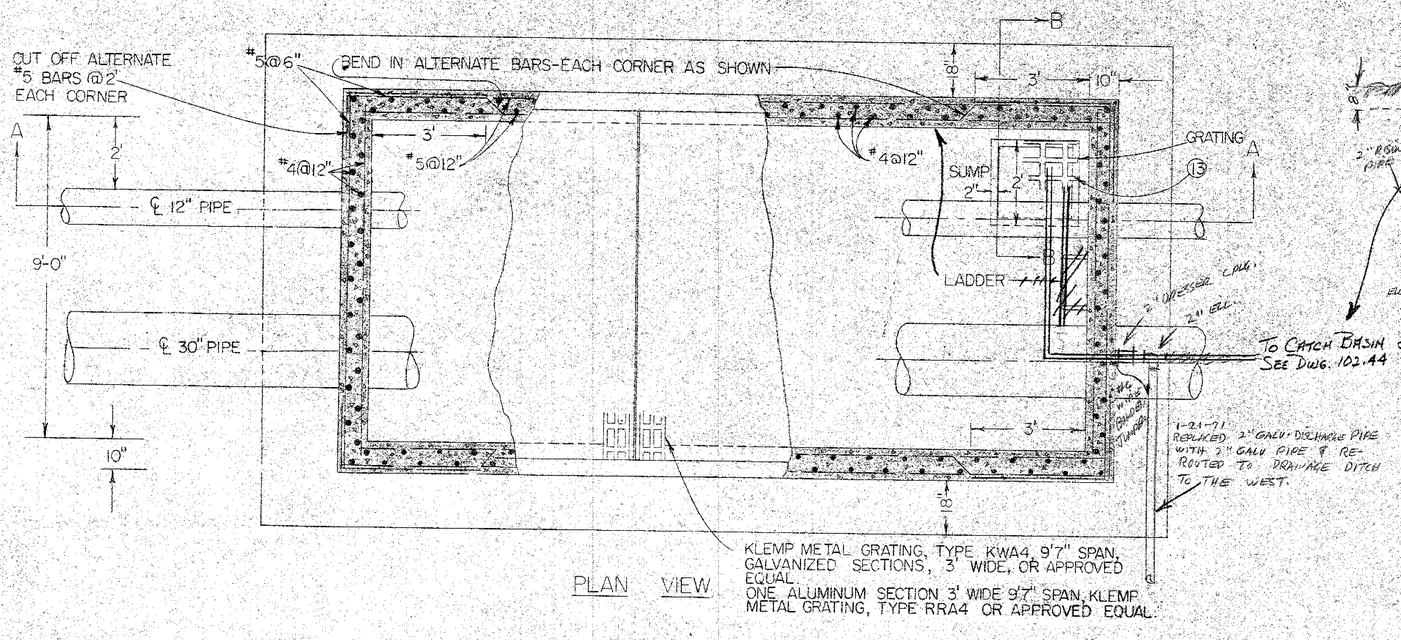

PLAN VIEW

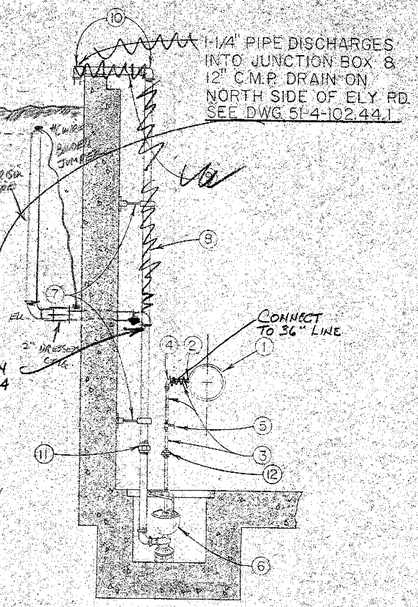

SECTION B-B

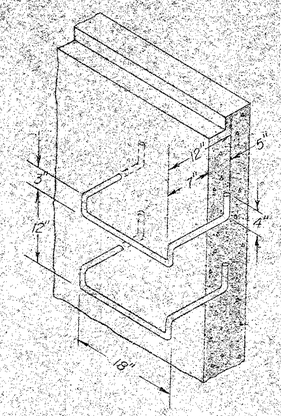

ISOMETRIC VIEW
LADDER RUNGS

NOTES:
1- HOT BEND RUNGS FROM 3/4" Ø BAR STOCK.
2- HOT-DIP GALVANIZE RUNGS AFTER FABRICATION.

SCHEDULE OF ITEMS	
1	12" BY-PASS LINE.
2	3/4" TREADED OUTLET WITH NYLON BUSHING.
3	3/4" LONG NIPPLES.
4	3/4" ELBOW.
5	3/4" VALVE.
6	AUTOMATIC CELLAR DRAINER, INJECTOR TYPE, PENBERTHY MODEL 2-R, OR APPROVED EQUAL.
7	PIPE HANGERS, CRANE NO 105, OR APPROVED EQUAL.
8	1-1/4" PIPE.
~~9~~	~~1-1/4" LONG NIPPLE.~~
10	1-1/4" ELBOWS.
11	1-1/4" UNION.
12	3/4" UNION
13	KLEMP GRATING TYPE KWA4 GALVANIZED OR APPROVED EQUAL.

NOTE: FOR WATERPROOFING CONCRETE- SEE SPECIAL PROVISIONS.

GALVANIZE ALL EXPOSED METAL AND PAINT ACCORDING TO SPECIFICATIONS.

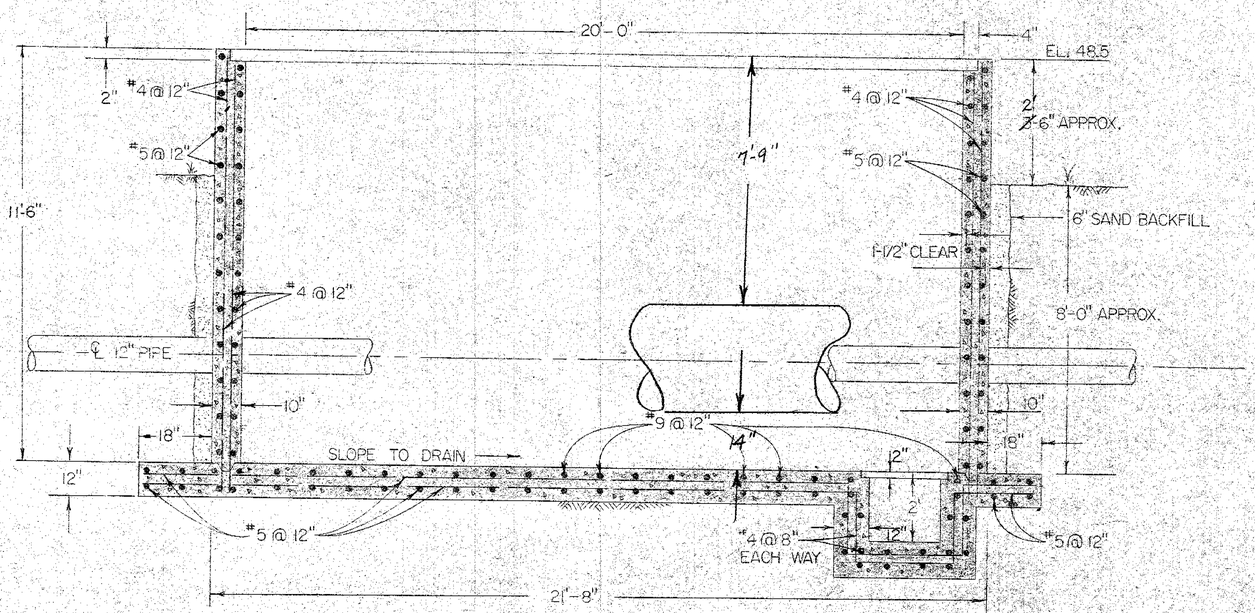

SECTION A-A

SCALE IN FEET

Return to Revised Index

No.	DATE	REVISION	By
		AS BUILT Date 4/63 By KIM	

PETALUMA AQUEDUCT
ELY ROAD METER VAULT DETAILS

SCALE: AS SHOWN | APPROVED: Jordan W. Mills, CHIEF ENGINEER RE 8271 | DRAWN: KIM
DATE: 12-1-1960 | CHECKED: G.R.S. RE 10702

SONOMA COUNTY FLOOD CONTROL AND WATER CONSERVATION DISTRICT

DESIGNED: S.A. | SUBMITTED: O. S. Woodard, RE 8537 | DRAWING NUMBER: 51-4-102.44.1

PRINTED ON DIEPO NO. 1000H CLEARPRINT

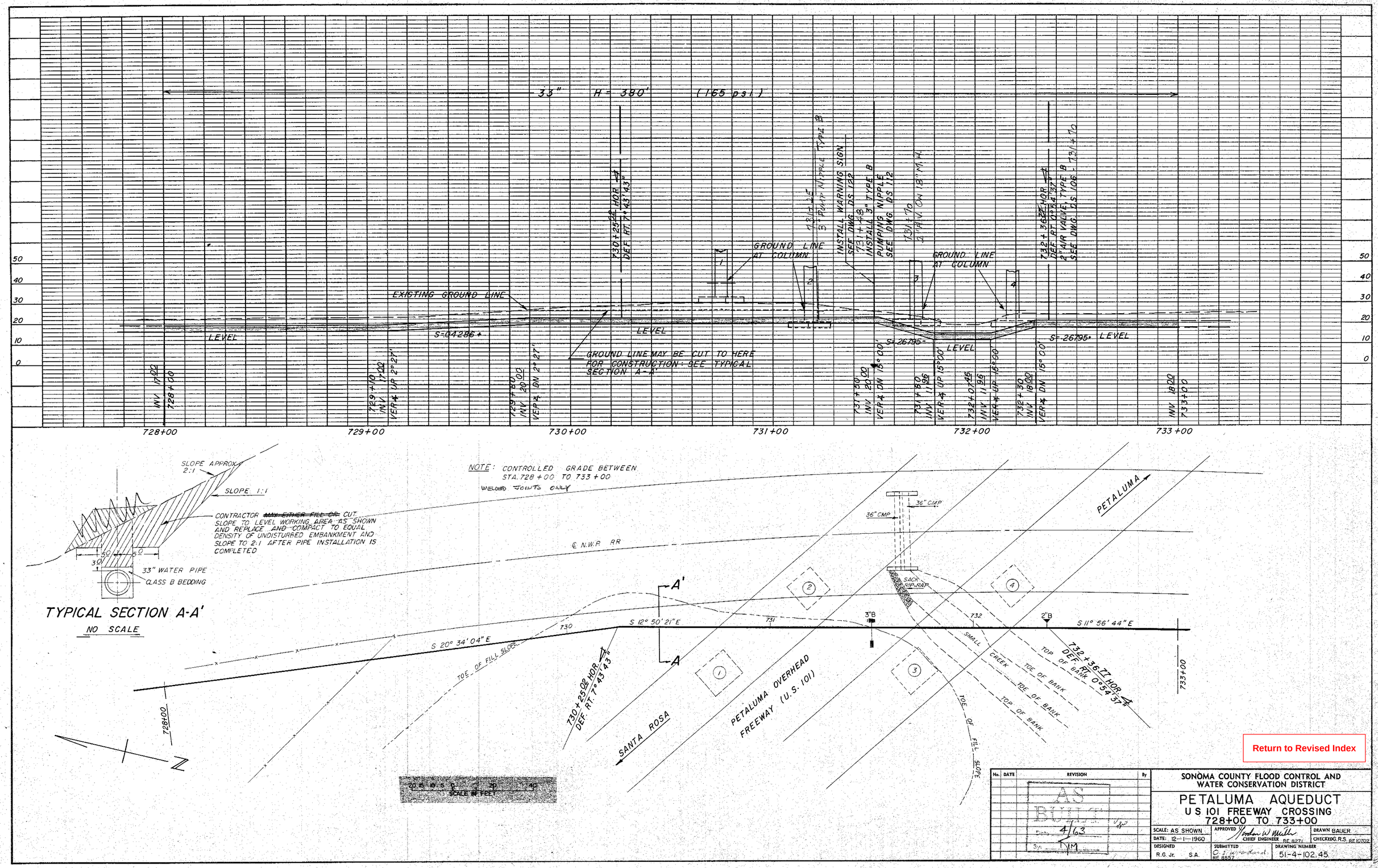

Return to Revised Index

No.	DATE	REVISION	By
		AS BUILT Date 4/63 By: TM	

SONOMA COUNTY FLOOD CONTROL AND WATER CONSERVATION DISTRICT

PETALUMA AQUEDUCT
U S 101 FREEWAY CROSSING
728+00 TO 733+00

SCALE: AS SHOWN	APPROVED Jordan W. Mueller CHIEF ENGINEER RE 8271	DRAWN BAUER
DATE: 12-1-1960		CHECKED G.R.S. RE 10702
DESIGNED R.G. Jr. S.A.	SUBMITTED C. J. Wiersdorf RE 8557	DRAWING NUMBER 51-4-102.45

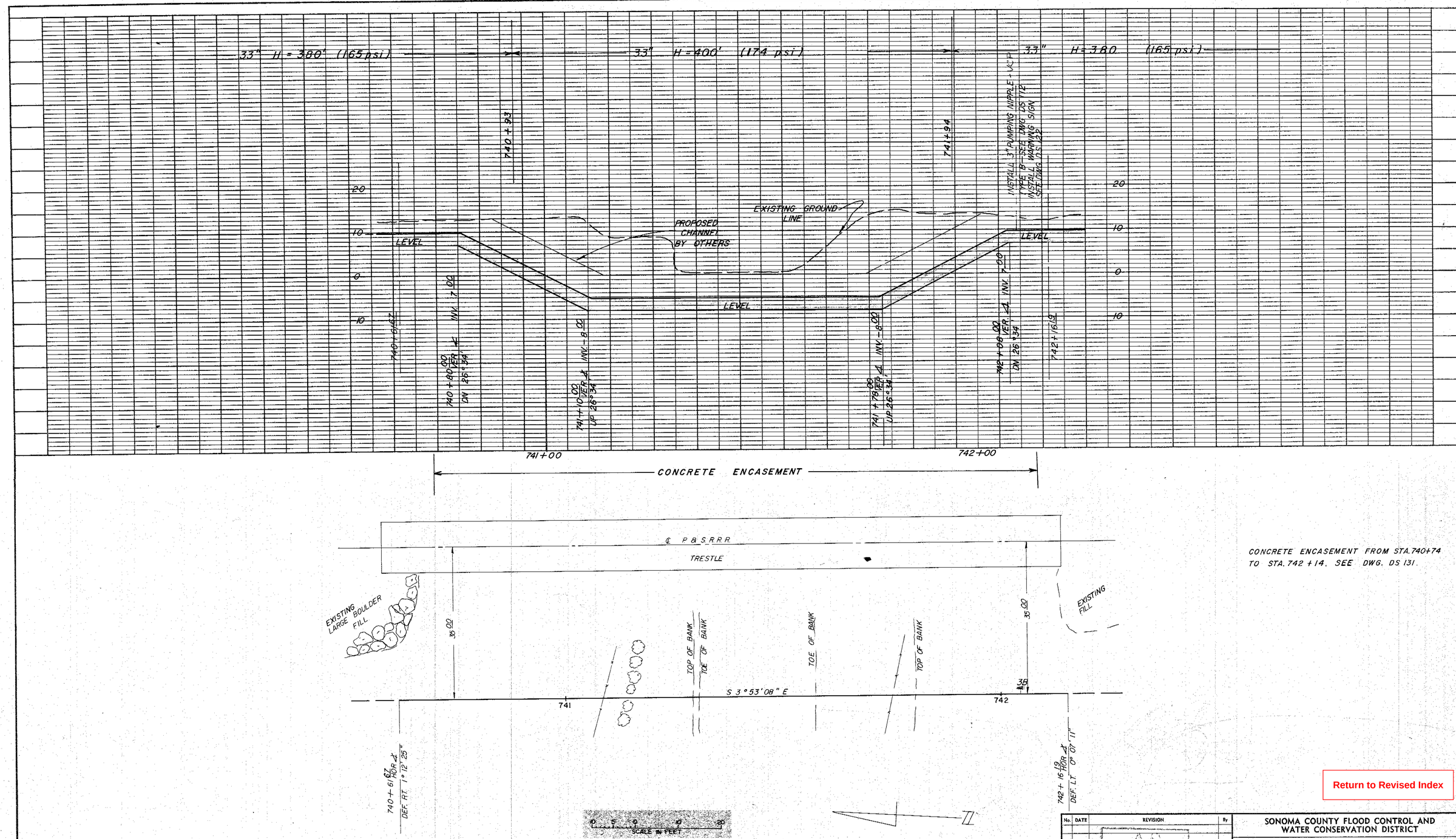

CONCRETE ENCASEMENT FROM STA. 740+74 TO STA. 742+14. SEE DWG. DS 131.

Return to Revised Index

No.	DATE	REVISION	By
		AS BUILT 4/63 KIM	

SONOMA COUNTY FLOOD CONTROL AND WATER CONSERVATION DISTRICT

PETALUMA AQUEDUCT
PETALUMA RIVER CROSSING
740 + 61.67 TO 742 + 16.19

SCALE: AS SHOWN	APPROVED Jordan W. Mills CHIEF ENGINEER RE 8271	DRAWN KLL RGJr
DATE: 12-1-1960		CHECKED G.R.S. RE 10702
DESIGNED R. G. Jr. S.A.	SUBMITTED O. Woodward RE 8557	DRAWING NUMBER 51-4-102.46

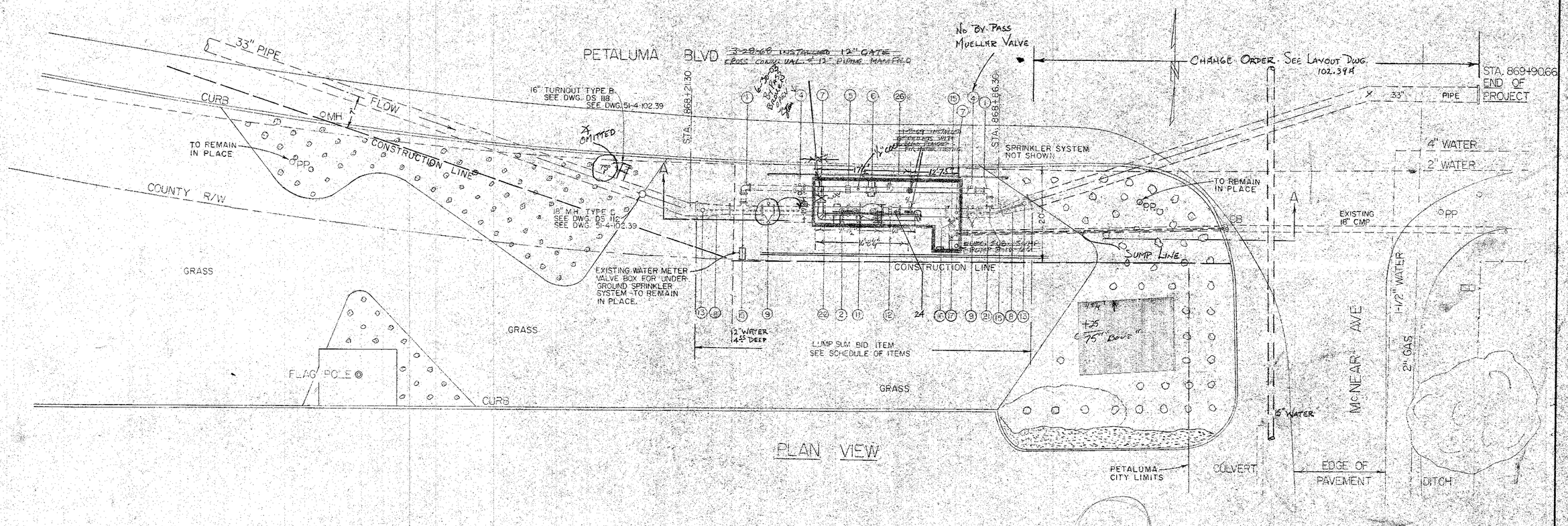

PLAN VIEW

	SCHEDULE OF ITEMS
1	12" ELBOW 90°
2	MECHANICAL TRANSMISSION CABLE, TYPE 249-~~B~~ BBC, CABINET AND CONTROL, TYPE 216-CO, SPARLING, OR APPROVED EQUAL.
4	12" GATE VALVE, TYPE B—SEE DWG. DS 115. (SEE NOTE BELOW).
5	12" FLEXIBLE COUPLING, DRESSER STYLE 38, OR APPROVED EQUAL.
6	12" FLANGED METER, SPARLING CF907 OR 115 OR APPROVED EQUAL WITH 953 OR 246 EXTENSION.
7	2" AIR VALVE, GATE VALVE-ANCHOR TO WALL.
8	33" TO 20" TAPER—SEE DWG. DS 130.
9	20" GATE VALVE, TYPE B—SEE DWG. DS 115.
11	20" x 5" (cf 126) COMPOUND MAIN METER, REGISTER EXTENSION, TYPE 246CD. 3'-6½" LONG FROM CENTERLINE OF PIPE, SPARLING, OR APPROVED EQUAL.
12	20" FLEXIBLE COUPLING, DRESSER STYLE 38, OR APPROVED EQUAL, AND FLANGED SPOOL, SCHEDULE ~~20~~ 10 PIPE, ½" CEM. MOR. LINING, 10' LONG FLANGE TO FLANGE
13	2" INSUL. GASKET, CORP COCK AND PIPING SHALL BE SCHEDULE 40, GALV.
14	DELETED
15	12" SADDLE NOZZLE, SEE DWG. DS 130.
16	12" FLANGED GATE VALVE WITH BY-PASS, RENSSELAER LIST 13-A, OR APPROVED EQUAL.
17	12" SURGE SUPPRESSOR VALVE, PELTON, OR APPROVED EQUAL.
18	12" BASE ELBOW 90°, FLANGED CONNECTIONS.
19	~~16" PIPE, SCREW TAPPED ON BOTTOM, WITH 1/2" 90° STREET ELBOW, 1/2" SHORT NIPPLE AND 1/2" VALVE, CRANE NO. 7, OR APPROVED EQUAL. DRAIN TO SUMP.~~ DELETED
20	12" 45° ELBOW, FLANGED CONNECTIONS. SCHEDULE 40
21	12" SCHEDULE ~~20~~ 10 PIPE, 60'±, DISCHARGE INTO EXISTING CATCH BASIN.
22	VAULT WITH HATCH COVER, LADDER, CELLAR DRAINER AND SUMP. FOR DETAILS, SEE DWGS. 51-2-102.47 AND 102.47.1
23	CONCRETE PEDESTAL ~~SIMILAR TO PEDESTAL ON DWG. DS 118.~~
24	PRESSURE GAUGE & SHUT-OFF COCK, MARSH TYPE 1, 200 PSI, OR A.E.
25	35.5 CUBIC YARDS REINFORCED CONCRETE
26	50 LINEAL FEET GUARD RAIL PAINTED PER SPECIFICATIONS.
~~27~~	~~INSTALL (2) 1/2" BRASS BRINE CACKS~~

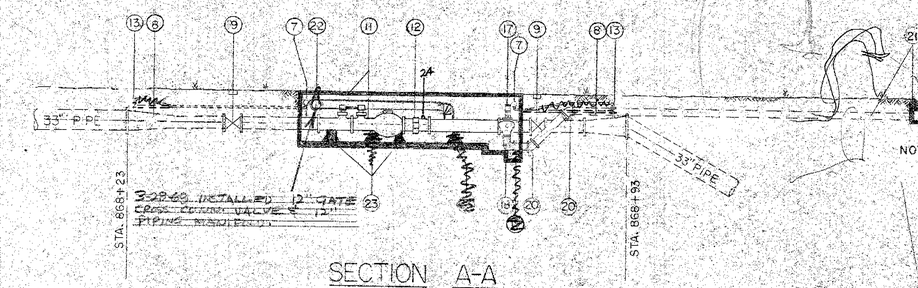

SECTION A-A

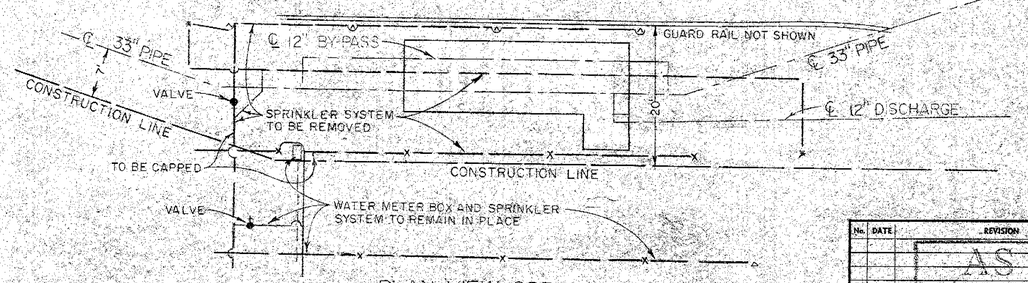

PLAN VIEW-SPRINKLER SYSTEM

NOTES: ALL SPRINKLER SYSTEM PIPE AND APPURTENENCES SHALL BE REMOVED NORTH OF THE CONSTRUCTION LINE AND THE EXISTING SPRINKLER SYSTEM CAPPED. ALL SPRINKLER SYTEM PIPING AND APPURTENENCES SHALL BE STORED AT THE JOB SITE AND SHALL BECOME THE PROPERTY OF THE DISTRICT AND SHALL BE REPLACED BY OTHERS.

ALL SHRUBERRY NORTH OF CONSTRUCTION LINE ~~MAY~~ TO BE REMOVED AND SHALL BE REPLACED BY OTHERS. CONTRACTOR SHALL LEAVE AREA CLEAN, GRADED AND READY FOR REPLANTING. ALL DAMAGE TO LANDSCAPING SOUTH OF THE OF THE CONSTRUCTION LINE BECOMES THE CONTRACTORS RESPONSIBILITY TO REPLACE IN KIND. LANDSCAPE CONTRACTOR MANN'S NURSURY, PETALUMA, CALIF.

METER STATION PIPING SHALL BE COATED THE SAME AS THE MAIN PIPELINE ~~TO THE INSIDE EDGE OF THE METER VAULT. METER STATION PIPING INSIDE OF THE METER VAULT SHALL BE BARE STEEL PIPE, PAINTED PER SPECIFICATIONS.~~ CHANGE ORDER

WELDED JOINTS ONLY.

Return to Revised Index

0 5 10 20
SCALE IN FEET

No.	DATE	REVISION	By
		AS BUILT Date 4/65 By KJM	

PETALUMA AQUEDUCT
McNEAR AVE METERING STATION

SCALE: AS SHOWN | APPROVED: Andrew W. Mueller, CHIEF ENGINEER | DRAWN: KJM
DATE: 12-1-1960 | CHECKED: GRS

SONOMA COUNTY FLOOD CONTROL AND WATER CONSERVATION DISTRICT

DESIGNED: S.A. | SUBMITTED | DRAWING NUMBER: 51-4

PRINTED ON DIEPO NO. 1000H CLEARPRINT

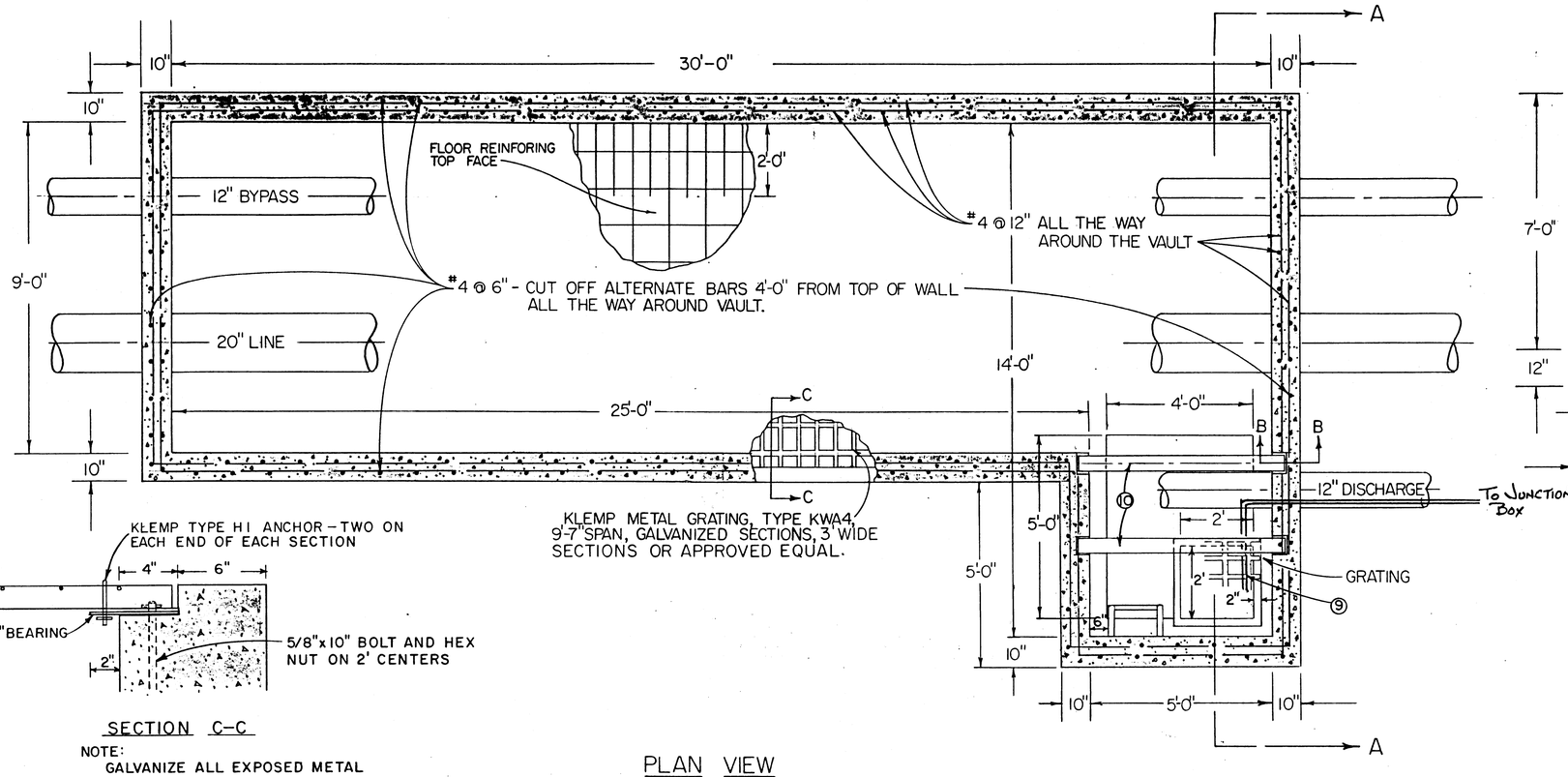

PLAN VIEW

NOTE:
FOR LADDER DETAILS SEE DWG. 51-4-102.44.1

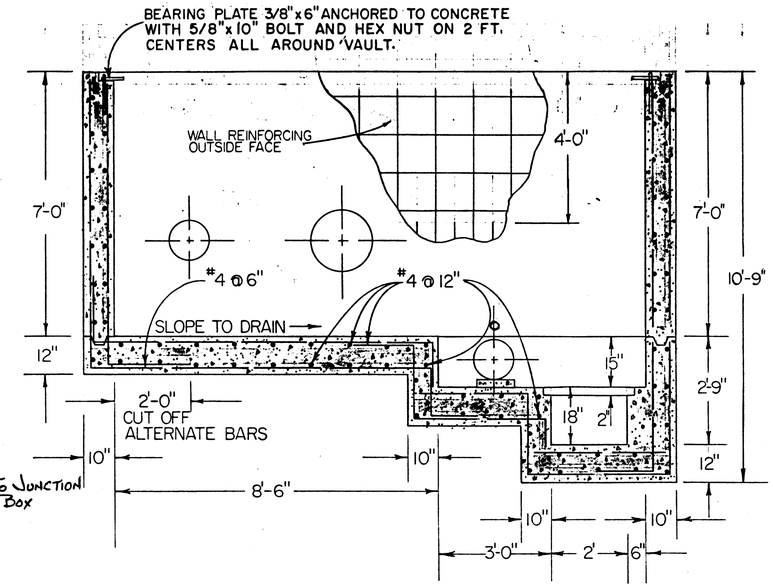

SECTION A-A

SECTION C-C

NOTE:
GALVANIZE ALL EXPOSED METAL
NO SCALE

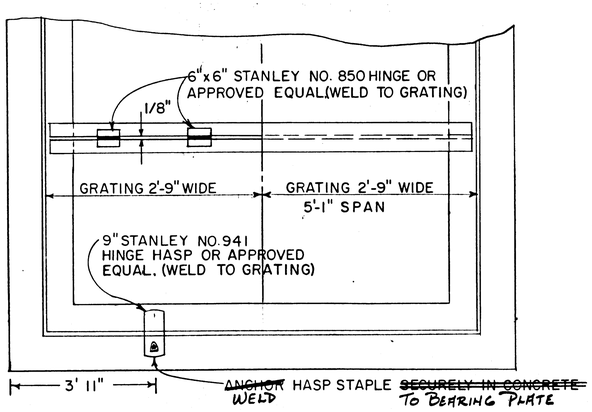

PLAN OF HATCH DETAIL

NOTE: GALVANIZE ALL EXPOSED METAL PAINT PER SPECS.
NO SCALE

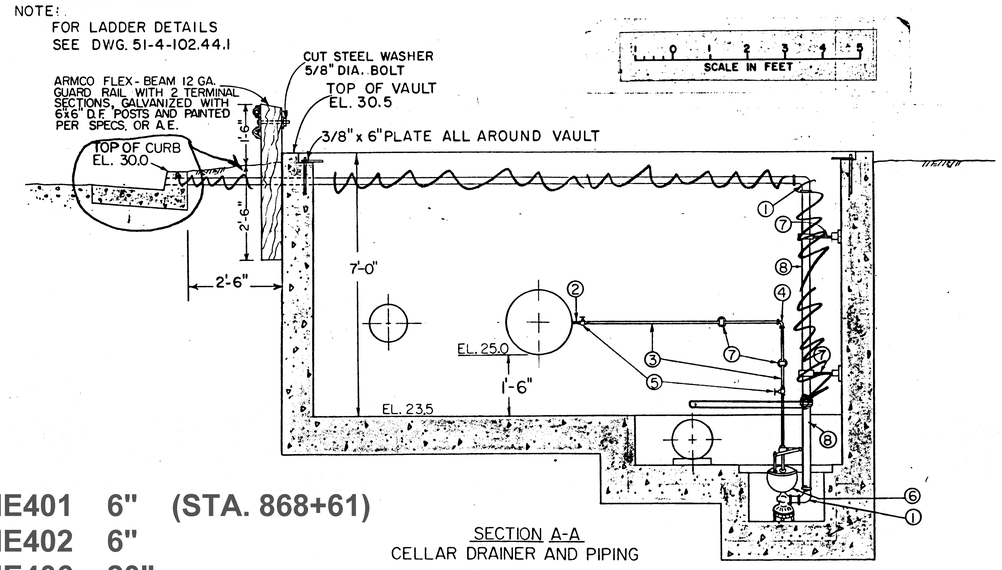

SECTION A-A
CELLAR DRAINER AND PIPING

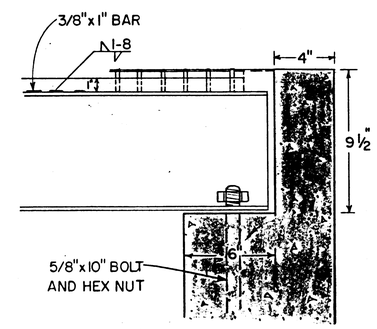

SECTION B-B
NO SCALE

NOTE: GALVANIZE ALL EXPOSED METAL AND PAINT PER SPECIFICATIONS.

Return to Revised Index

NOTES

1- 1-1/2" COVER OVER REINF. STEEL IN WALLS-3" IN FLOOR.

2- SUMP COVER-KLEMP GRATING SYMBOL KWA4 GALVANIZED OR APPROVED EQUAL. CUT IN 2 SECTIONS TO FIT AROUND PIPING.

SCHEDULE OF ITEMS

1	1-1/4" ELBOW
2	3/4" THREADED OUTLET WITH NYLON BUSHING
3	3/4" PIPE
4	3/4" ELBOW
5	3/4" VALVE
6	AUTOMATIC CELLAR DRAINER INJECTOR TYPE, PENBERTHY MODEL 2 R OR APPROVED EQUAL
7	PIPE HANGER ~~CRANE NO 5, OR~~ APPROV. EQUAL
8	1-1/4" PIPE
9	KLEMP GRATING TYPE KWA4 GALVANIZED OR APPROVED EQUAL
10	2 - ~~8~~ 6 WF17 5'7" LONG

PT2ME401 6" (STA. 868+61)
PT2ME402 6"
PT2ME406 20"
PT2ME407 12"

CATHODIC PROTECTION

No.	DATE	REVISION	By
2	2/93	ADDED CATHODIC PROTECTION	JT

PETALUMA AQUEDUCT
McNEAR AVE METER VAULT DETAILS

SCALE: AS SHOWN | APPROVED Stanley W. Mills CHIEF ENGINEER RE 8271 | DRAWN KIM
DATE: 12/1/60 | CHECKED GRS RE 10702

SONOMA COUNTY FLOOD CONTROL AND WATER CONSERVATION DISTRICT

DESIGNED S.ALLSOP | SUBMITTED O.S. Woodard RE 8557 | DRAWING NUMBER 51-4-102.47.1

PRINTED ON DIEPO NO. 1000H CLEARPRINT

P-12-7

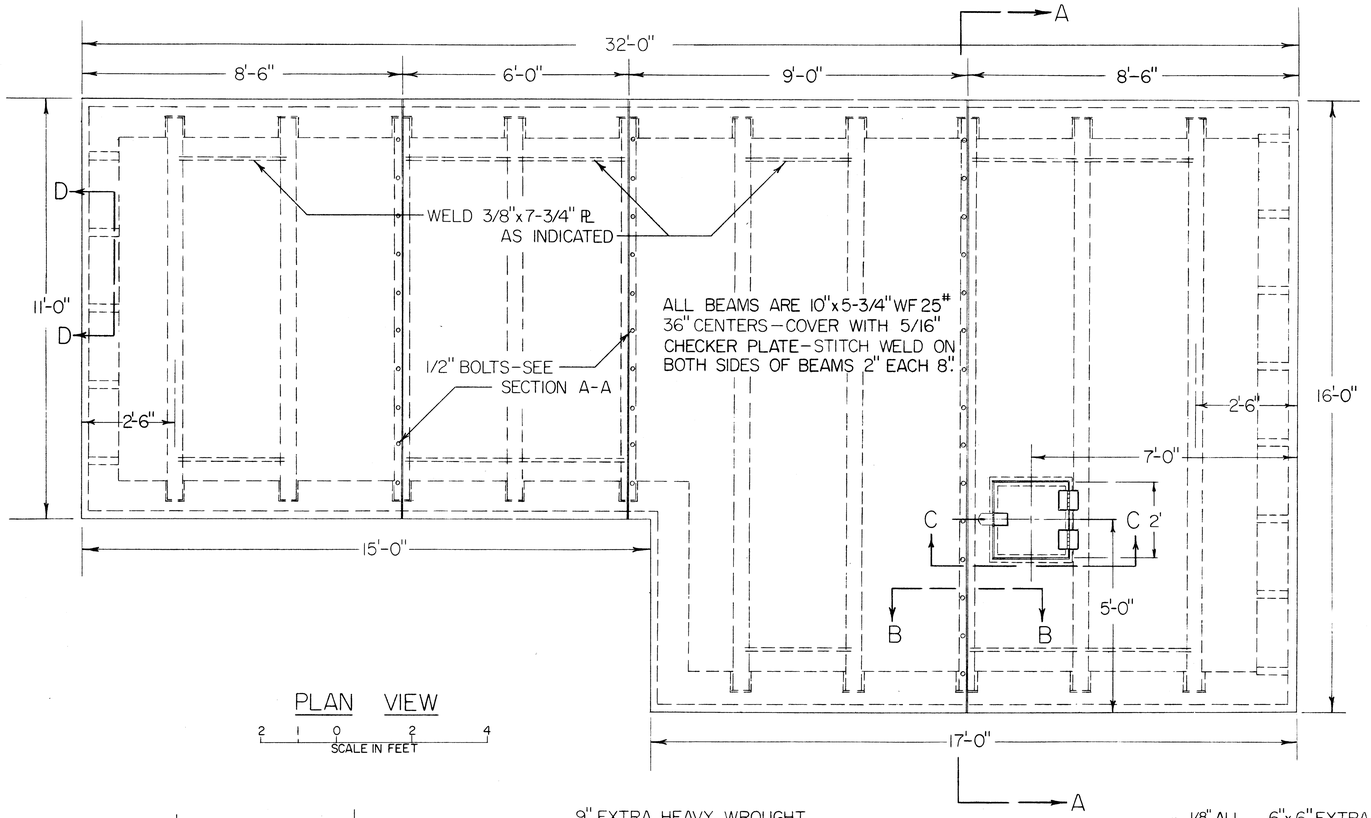

PLAN VIEW

2 1 0 2 4
SCALE IN FEET

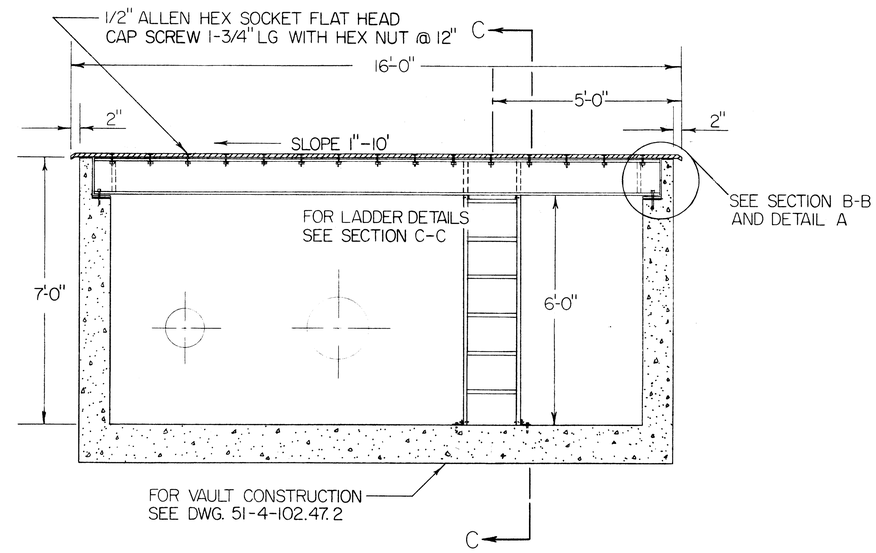

SECTION A-A

2 1 0 2 4
SCALE IN FEET

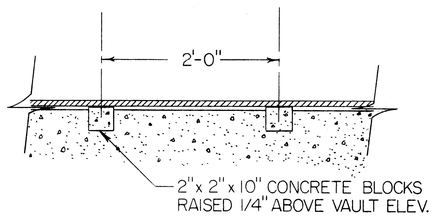

SECTION D-D

6 4 2 0 6 12
SCALE IN INCHES

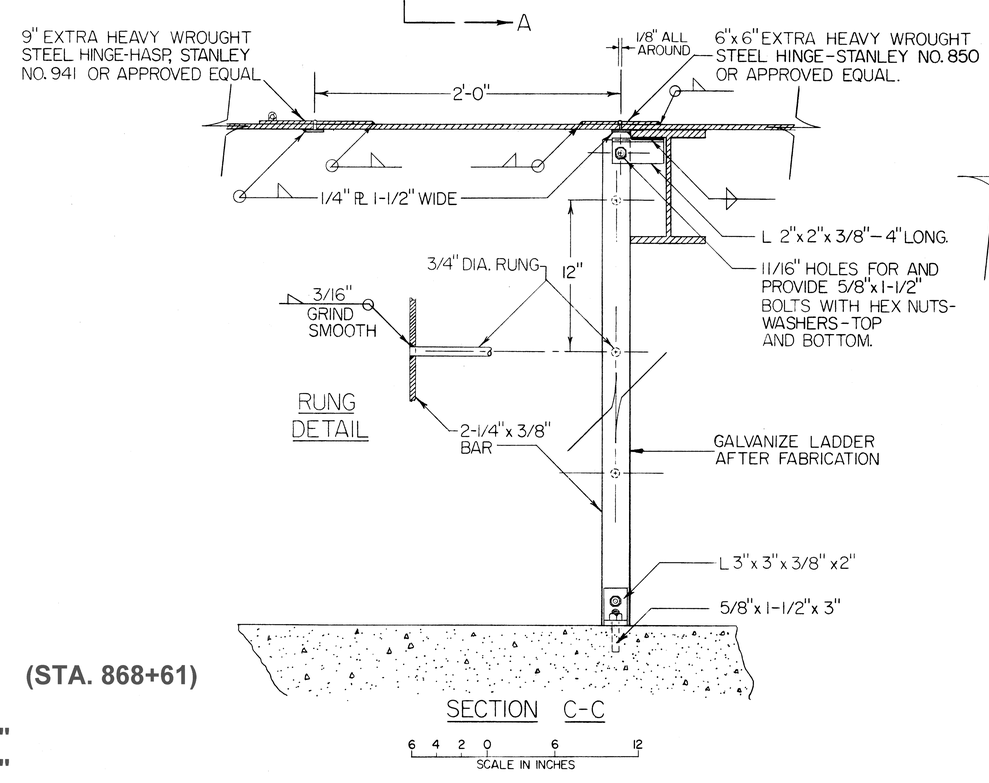

SECTION C-C

6 4 2 0 6 12
SCALE IN INCHES

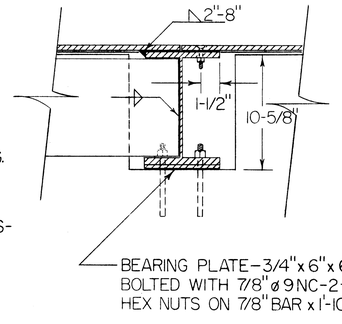

SECTION B-B

6 4 2 0 6 12
SCALE IN INCHES

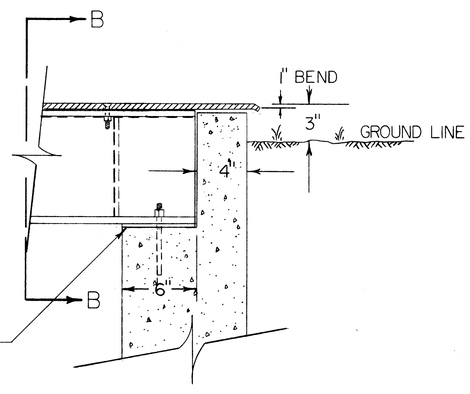

DETAIL A

6 4 2 0 6 12
SCALE IN INCHES

NOTES-

1. FOR PAINTING REQUIREMENTS REFER TO PAR. 3.18 OF THE SPECIAL PROVISIONS.

PT2ME401 6" (STA. 868+61)
PT2ME402 6"
PT2ME406 20"
PT2ME407 12"

Return to Revised Index

No.	DATE	REVISION	By

PETALUMA AQUEDUCT
McNEAR AVE METER VAULT DETAILS

SCALE: AS SHOWN | APPROVED | DRAWN KIM
DATE: 12/1/60 | CHIEF ENGINEER RE 8271 | CHECKED GRS RE 10702

SONOMA COUNTY FLOOD CONTROL AND WATER CONSERVATION DISTRICT

DESIGNED SA | SUBMITTED O.S. Woodward RE 8557 | DRAWING NUMBER 51-4-102.47.3

PRINTED ON DIEPO NO. 1000H CLEARPRINT

THERE WAS ALREADY A 51-2-102. A47.2 DRAWING, CHANGING BACK TO 51-2-102.47.3

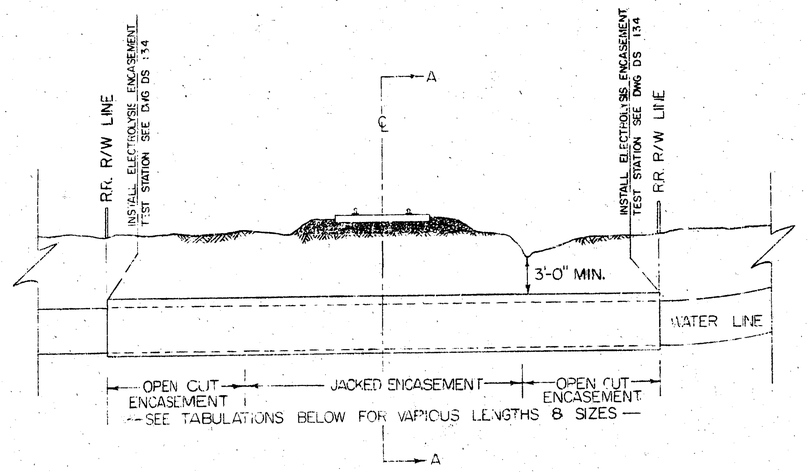

TYPICAL ELEVATION VIEW
STEEL ENCASEMENT
RAILROAD CROSSINGS

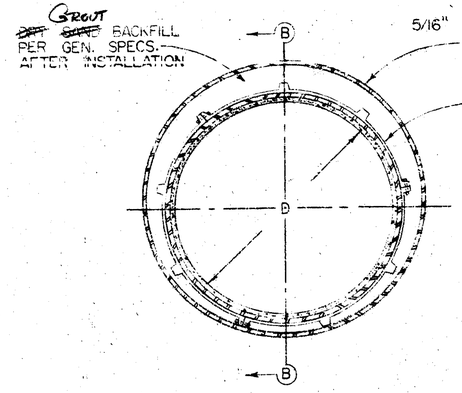

TYPICAL SECTION A-A
STEEL ENCASEMENT

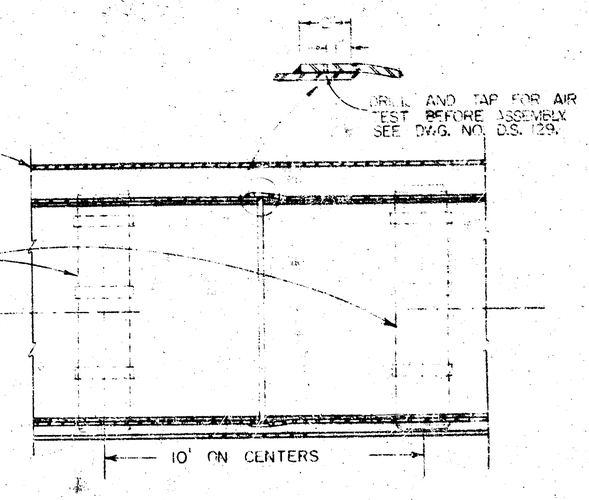

TYPICAL SECTION B-B
STEEL ENCASEMENT

NOTE 1-ALTERNATE PIPE COATING AS SPECIFIED-NOT SHOWN.
2-USE MALONEY CROSSING INSULATORS MODEL 57 ON CONCRETE COATED PIPELINE AND MODEL 55 ON COAL-TAR COATED PIPELINE
3. WELDED JOINTS ONLY

S.C.F.C. & W.C.D. REFERENCE DWG. NO.	RAILROAD CROSSING NO.	S.C.F.C. & W.C.D. STATION	RAILROAD DESIGNATION	RAILROAD STATION	LENGTH-SIZE OPEN CUT STEEL ENCASEMENT	LENGTH-SIZE JACKED STEEL ENCASEMENT	DEPTH BELOW RR TIE TO TOP PIPE CASING
51-4-102.3	1	1+39.0	NWP RR-SPUR	———	45'-36" DIAM.*	NONE	3'
51-4-102.8	2	103+35.15	NWP RR-MAIN	2648+42.5	51'-36" DIAM.*	34'-36" DIAM.*	7'
51-4-102.13	3	274+97.5	NWP RR-MAIN	2477+30.2	51'-36" DIAM.*	36'-36" DIAM.*	6'
51-4-102.23	4	547+99.83	NWP RR-MAIN	2204+86.6	23'-42" DIAM.*	62'-42" DIAM.*	5'
51-4-102.23	5	553+02.53	NWP RR-MAIN	2200+08.1	49'-42" DIAM.*	36'-42" DIAM.*	6'
51-4-102.27	6	693+32.26	NWP RR-MAIN	2060+84.5	51'-42" DIAM.*	34'-42" DIAM.*	5'
51-4-102.29	7	736+97.01	P.&S.R. RR-MAIN	67+57.0	60'-42" DIAM.*	40'-42" DIAM.*	4'
51-4-102.18	8	40[illegible]+41.87	NWP RR-MAIN	2348+36.0	NONE	72'-24" DIAM.**	4'

	STATE HWY. CROSSING NO.		STATE HWY. DESIGNATION				DEPTH BELOW PAVEMENT SURFACE
51-4-102.4	1	16+67	STATE HWY. 12	SEBASTOPOL	NONE	42'-36" DIAM*	6'
51-4-102.13	2	268+00	STATE HWY. 101	WILFRED	NONE	NONE	
51-4-102.29	3	731+50	STATE HWY. 101	PETALUMA OVERHEAD	NONE	NONE	

* = 5/16" PLATE
** = 1/4" PLATE

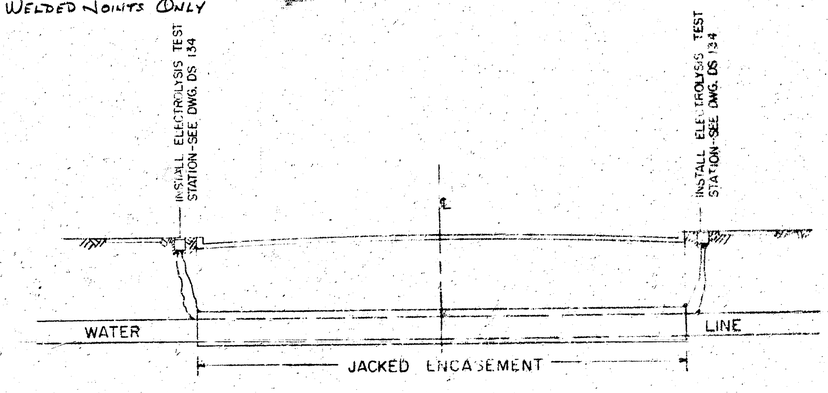

TYPICAL ELEVATION VIEW
STEEL ENCASEMENT
HIGHWAY CROSSINGS

Return to Revised Index

No.	DATE	REVISION	By
		AS BUILT Date 4/63 By: [illegible]	

PETALUMA AQUEDUCT
RAILROAD and HIGHWAY CROSSINGS

SCALE: NONE | APPROVED [illegible] CHIEF ENGINEER | DRAWN KIM
DATE: 12-1-1960 | CHECKED [illegible]

SONOMA COUNTY FLOOD CONTROL AND WATER CONSERVATION DISTRICT

DESIGNED P.A. | SUBMITTED [illegible] | DRAWING NUMBER 51-4-102.48

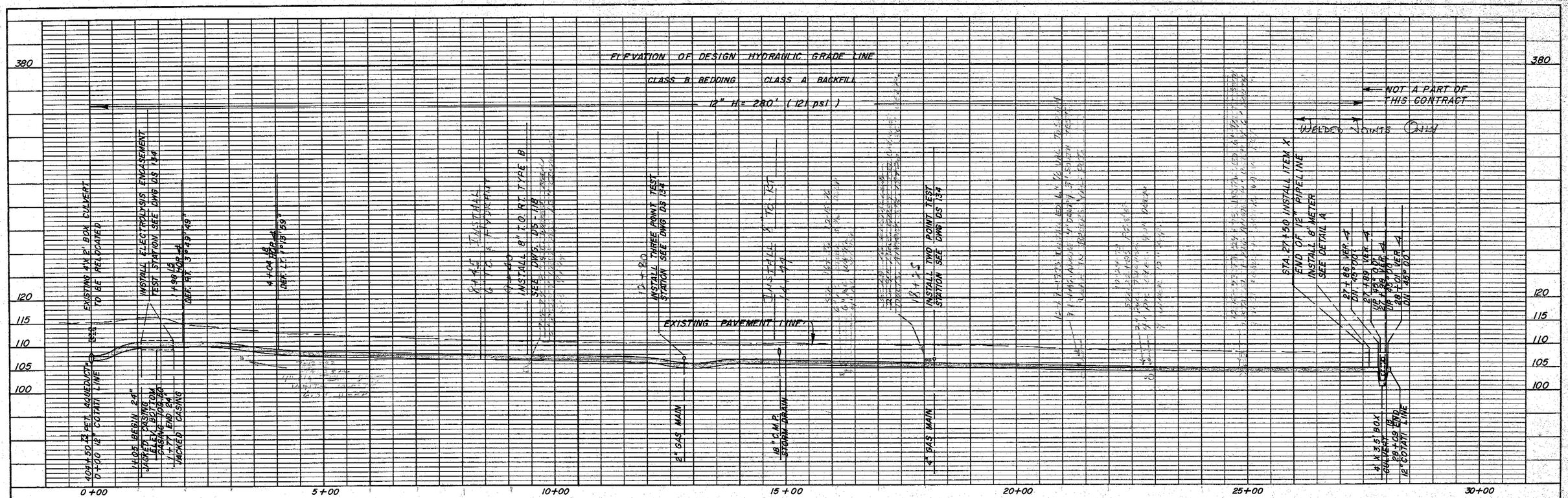

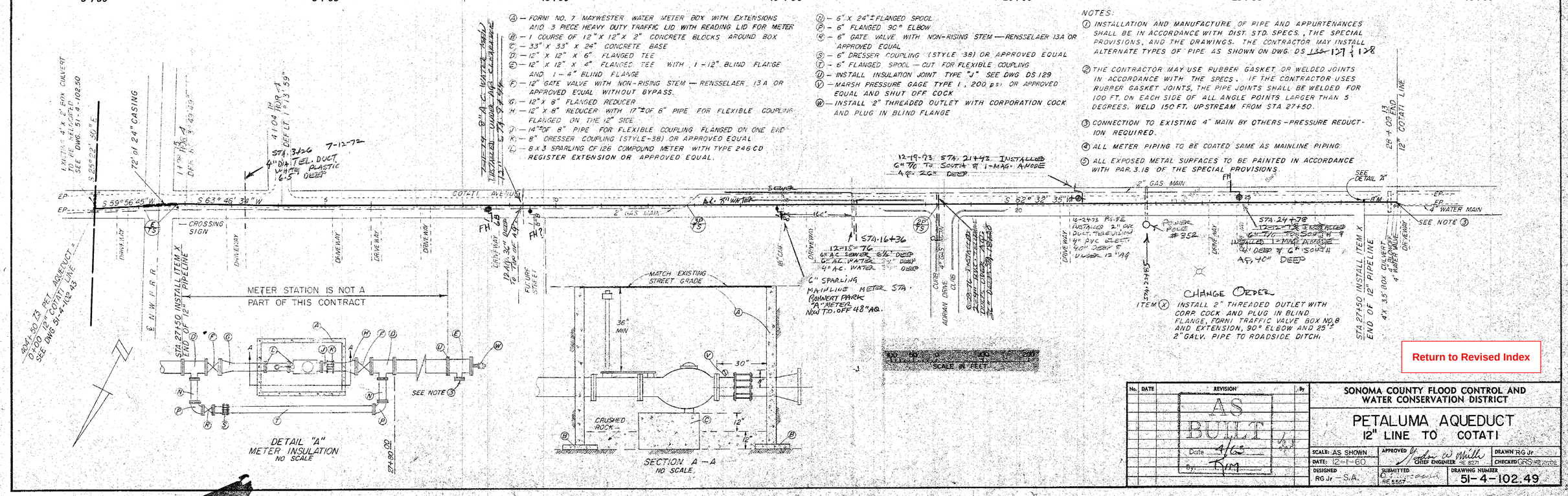

No.	DATE	REVISION	By

SONOMA COUNTY FLOOD CONTROL AND WATER CONSERVATION DISTRICT

PETALUMA AQUEDUCT
12" LINE TO COTATI

SCALE: AS SHOWN	APPROVED Arthur W. Mills CHIEF ENGINEER RE 5571	DRAWN RG Jr.
DATE: 12-1-60		CHECKED GRS 12/2/60
DESIGNED RG Jr. — S.A.	SUBMITTED RE 5557	DRAWING NUMBER 51-4-102.49

PLATE 1-PLAN-PROFILE-F.A.S.
CLEARPRINT PAPER CO., S.F. CAL.
No. 1000H-1

Return to Revised Index

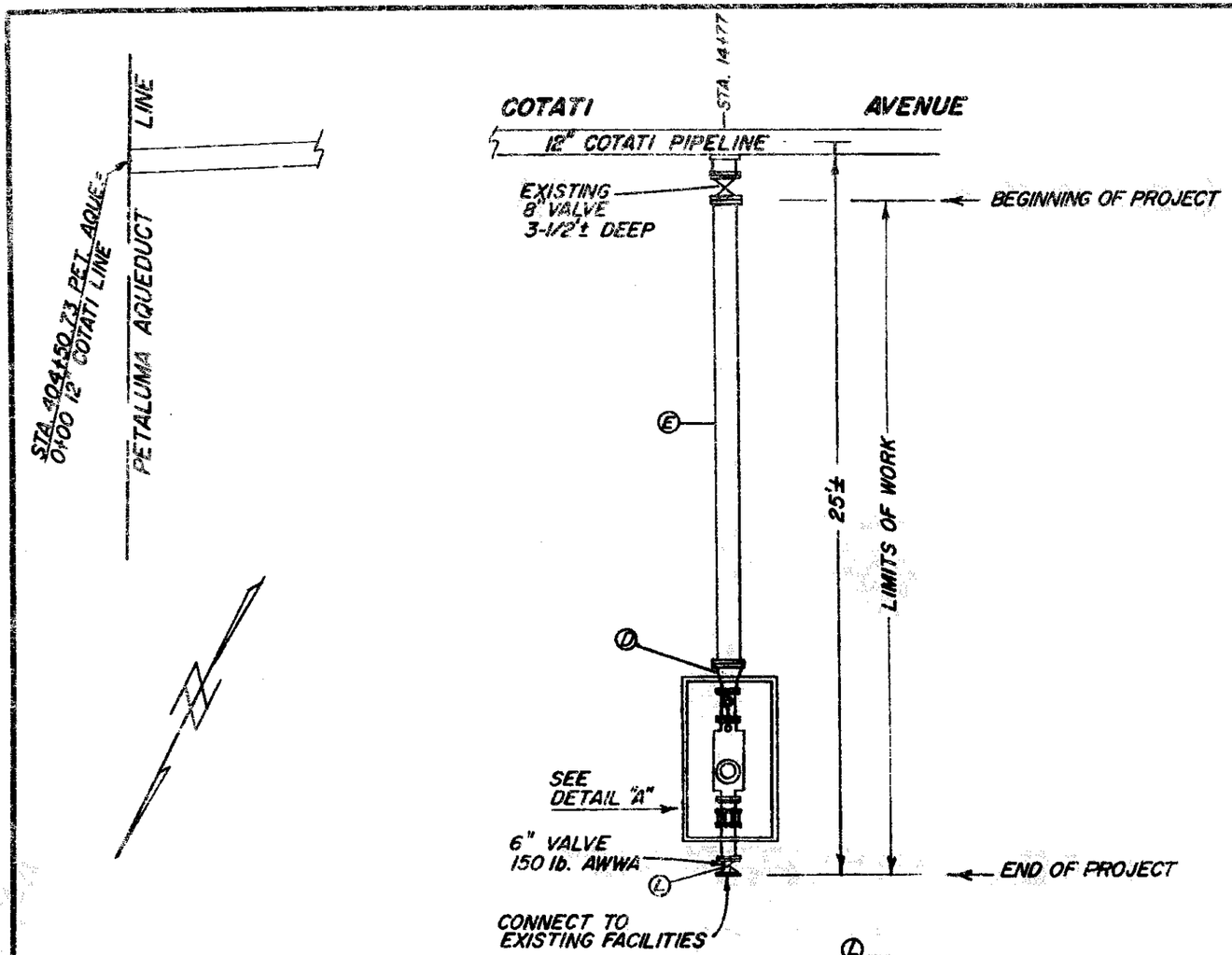

(A) FORNI IR24 PRE-CAST PIT WITH EXTENSIONS AND 4-PIECE STEEL PLATE TRAFFIC LID WITH ONE READING LID FOR METER TO BE LOCATED IN THE FIELD.
(B) 1 COURSE OF 12" x 12" x 2" CONCRETE BLOCKS AROUND BOX.
(C) 33" x 33" x 24" CONCRETE BASE.
(D) 8" x 6" REDUCER
(E) 8" PIPE-SCHEDULE 40, OR TRANSITE CLASS 150psi WITH TIFCO FITTINGS. WRAP WITH STUCCO NETTING AND PLASTER, 1:3 MIX 1" THICK.
(F) 6" PIPE SPOOL FOR FLEXIBLE COUPLING-FLANGED-SCHEDULE 40
(G) 6" DRESSER COUPLING (#39 OR AP. EQ.) HARNESS PER DETAIL DWG. 51-4-102.49B.
(H) 6" x 2" SPARLING CF126 COMPOUND METER WITH TYPE 246CD REGISTER EXTENSION OR APPROVED EQUAL FOR 150 lb. SERVICE.
(J) MARSH PRESSURE GAGE TYPE 1, 200 psi, OR APPROVED EQUAL AND SHUTOFF COCK, CRANE 744, OR APPROVED EQUAL.

(L) 6" GATE VALVE AND VALVE BOX, NO. 161 TRAFFIC VALVE BOX WITH CAST IRON COVER AND EXTENSION, GEORGE P. FORNI, INC., OR APPROVED EQUAL, SET IN 24" x 24" x 6" CONCRETE COLLAR AT PAVEMENT GRADE.

NOTES

1. ALL BURIED STEEL PIPING TO BE COATED WITH CEMENT MORTAR 1" THICK.
2. ALL METER SURFACES TO BE PAINTED IN ACCORDANCE WITH METER MANUFACTURER'S STANDARD PAINTING PROCEDURE.
3. BURIED GATE VALVE (ITEM L) TO BE WRAPPED WITH STUCCO NETTING AND PLASTER, WITH 1:3 MIX 1" THICK.
4. ALL EXPOSED METAL SURFACES TO BE COATED WITH TWO APPLICATIONS OF INERTOL 35-D SERVICE CEMENT. FINAL THICKNESS 1/8".
5. ALL FLANGES AND CONNECTIONS TO BE INSPECTED UNDER STATIC HEAD BEFORE BACKFILLING.

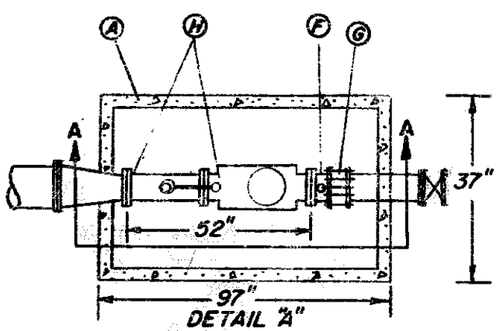

DETAIL "A"
METER INSTALLATION

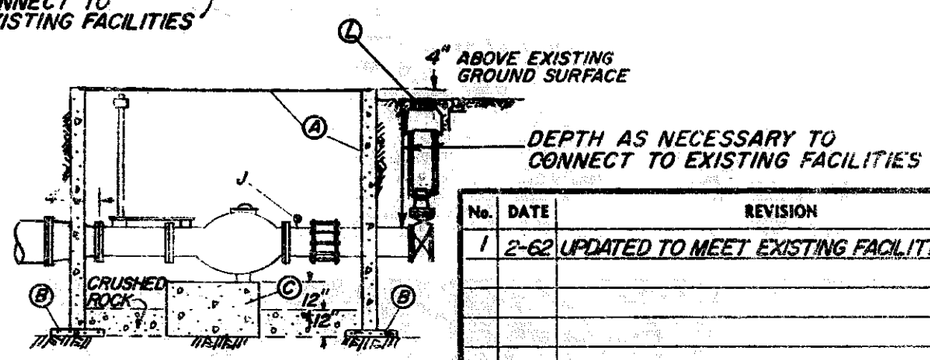

SECTION A-A

Return to Revised Index

No.	DATE	REVISION	By
1	2-62	UPDATED TO MEET EXISTING FACILITIES	KW

ROHNERT PARK WATER DISTRICT
METER AND SERVICE CONNECTION AT STA. 14+77

SCALE: NONE
DATE: 12/20/1961
APPROVED: CHIEF ENGINEER RE 8271
DRAWN R.J.M.

SONOMA COUNTY FLOOD CONTROL AND WATER CONSERVATION DISTRICT

DESIGNED GRS RE10702
CHECKED O.J.W. RE8657
DRAWING NUMBER 51-4-102.49A

PRINTED ON DIEPO NO. 1000H CLEARPRINT

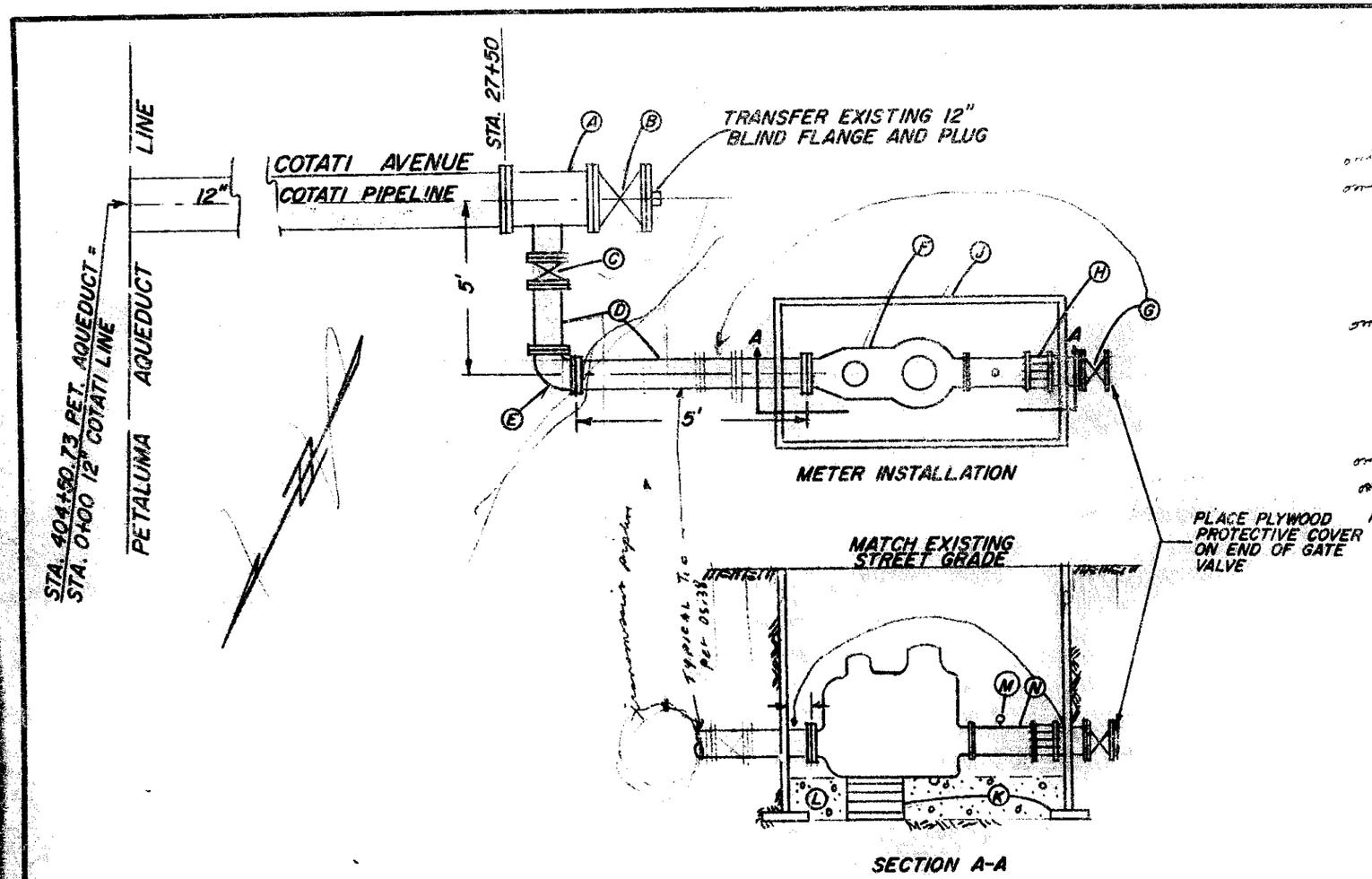

omit (A) 12" x 12" x 4" FLANGED TEE - SCHEDULE 20

omit (B) 12" 150 lb. GATE VALVE, NO. 8 TRAFFIC VALVE BOX, WITH CAST IRON COVER AND EXTENSION, GEORGE P. FORNI, INC., OR APPROVED EQUAL, WITH 24" x 24" x 6" CONCRETE BASE AT PAVEMENT GRADE. WRAP WITH 18ga. STUCCO NETTING AND PLASTER WITH 1:3 MIX 1" THICK.

omit (C) 4" 150 lb. GATE VALVE, NO. 8 TRAFFIC VALVE BOX, WITH CAST IRON COVER AND EXTENSION, GEORGE P. FORNI, INC., OR APPROVED EQUAL, WITH 24" x 24" x 6" CONCRETE BASE AT PAVEMENT GRADE. WRAP WITH 18ga. STUCCO NETTING AND PLASTER WITH 1:3 MIX 1" THICK.

omit (D) 4" PIPING - SCHEDULE 40.

omit (E) 4" FIELD ELBOW - SCHEDULE 40.

A (F) 4" CT HERSEY COMPOUND METER.

B (G) 4" 150 lb. GATE VALVE, NO. 8 TRAFFIC VALVE BOX, WITH CAST IRON COVER AND EXTENSION, GEORGE P. FORNI, INC., OR APPROVED EQUAL, WITH 24" x 24" x 6" CONCRETE BASE AT PAVEMENT GRADE. WRAP WITH 18ga. STUCCO NETTING AND PLASTER WITH 1:3 MIX 1" THICK.

C (H) 4" DRESSER COUPLING (STYLE 39) OR APPROVED EQUAL. CENTER ON SPOOL

D (J) NO. 6 FORNI MAEWESTER METER AND REGULATOR BOX WITH EXTENSIONS AND TYPE 13 3-PIECE STEEL TRAFFIC LID.

E (K) 12" x 12" x 2" CONCRETE BLOCKS.

F (L) 6" CRUSHED ROCK.

G (M) MARSH PRESSURE GAGE TYPE 1, 200 psi, OR APPROVED EQUAL AND SHUTOFF COCK.

H (N) 6" PIPE SPOOL, FLANGED - SCHEDULE 40.

NOTES

1. ALL METER PIPING TO BE COATED WITH CEMENT MORTAR 1" THICK.
2. ALL EXPOSED METAL SURFACES TO BE PAINTED IN ACCORDANCE WITH METER MANUFACTURER'S STANDARD PAINTING PROCEDURE.

Return to Revised Index

TYPICAL METER INSTALLATION

No.	DATE	REVISION	By

COTATI PUBLIC UTILITY DISTRICT
METER AND SERVICE CONNECTION
AT STA. 27+50

SCALE: NONE	APPROVED [signature] CHIEF ENGINEER	DRAWN SKMc	
DATE: 12/26/1961			

SONOMA COUNTY FLOOD CONTROL AND WATER CONSERVATION DISTRICT

DESIGNED	CHECKED	DRAWING NUMBER
GRS	O. J. W.	51-4-102.49B

PRINTED ON DIEPO NO. 1000H CLEARPRINT

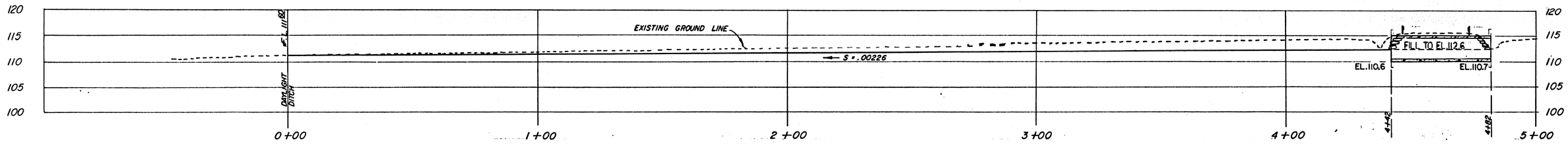

PROFILE

SCALE IN FEET

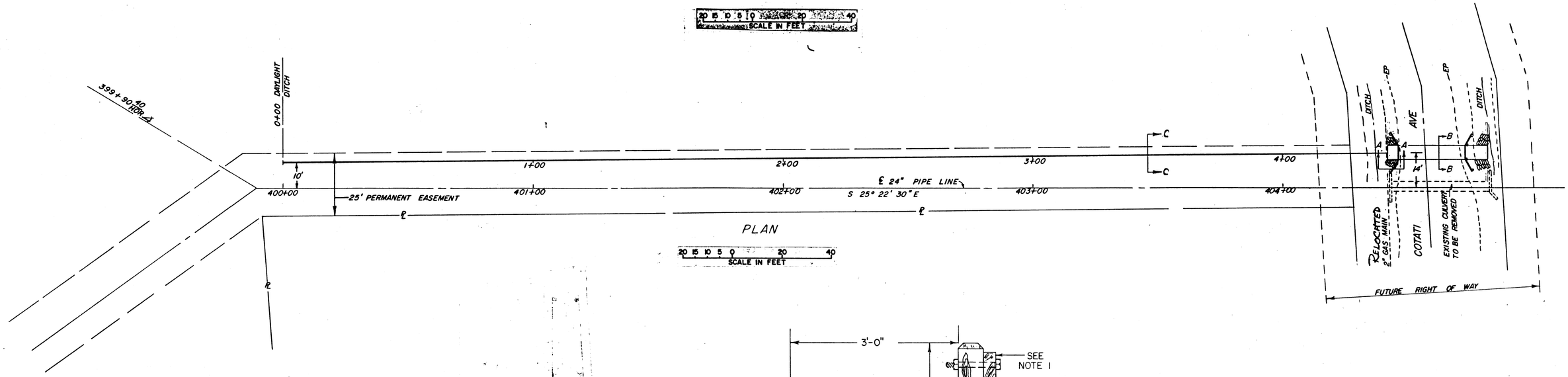

PLAN

SCALE IN FEET

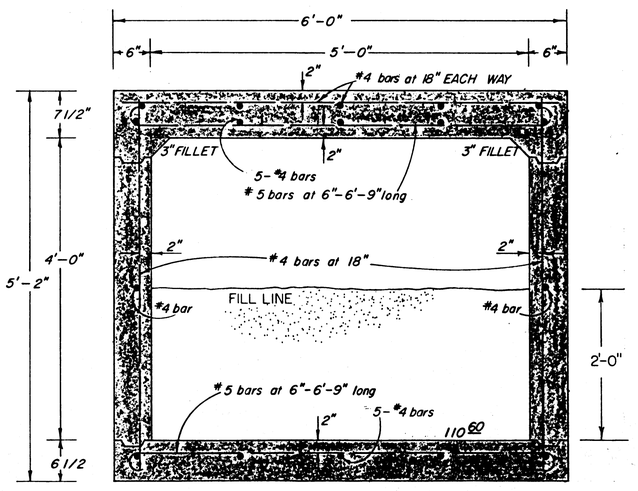

SECTION B–B

NOTES

1- INSTALL GUARD RAILING BOTH ENDS OF CULVERT. CONSTRUCT OF 6"x6"x5' REDWOOD POSTS ON 6'-6" CTRS (4), BOLT 3"x12" REDWOOD PLANKING WITH 5/8"x12" STANDARD STEEL BOLTS. PAINT WHITE, 3 COATS, AFTER ASSEMBLING. INSTALL AS DIRECTED BY ENGINEER.

2- SACK CONCRETE RIP-RAP BOTH ENDS OF CULVERT-SEE SECT. 25, DIST. STD. SPECS, OR BROKEN CONCRETE RUBBLE.

3- CONTRACTOR TO LEAVE CIRCUMFERENTIAL KEY-WAY, 2"x3", AROUND BOTH ENDS OF CULVERT.

4- FILL CULVERT TO GIVEN GRADE WITH COMMON EXCAVATED MATERIAL.

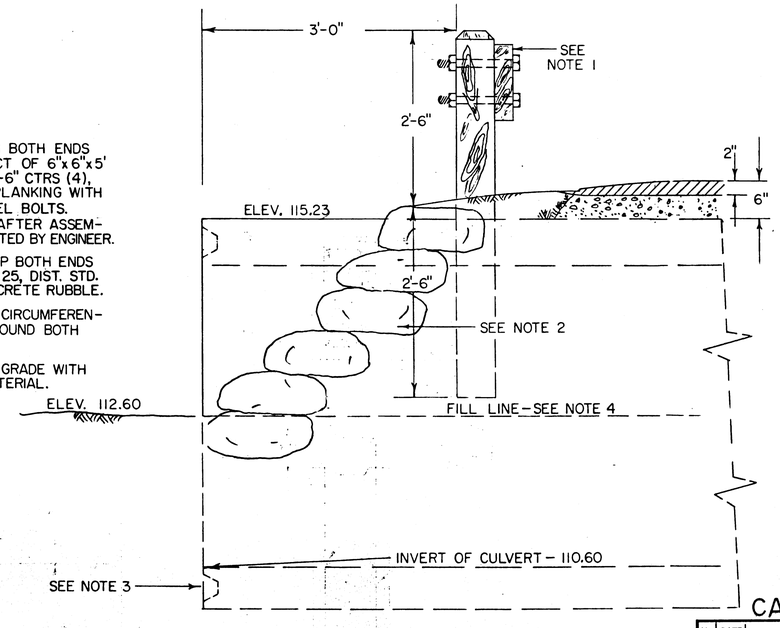

SECTION A–A

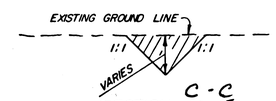

SECTION ~~A–A~~ C-C
NO SCALE

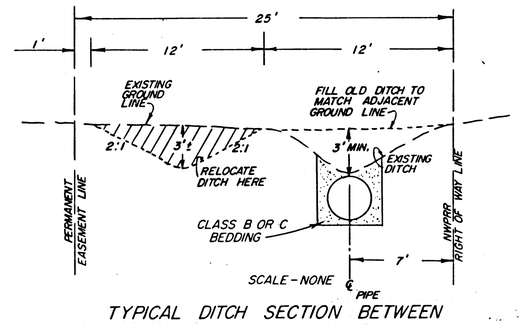

SCALE - NONE

TYPICAL DITCH SECTION BETWEEN
STATION 422+50 TO 496+50
(DWGS 51-4-102.18, 19 & 20)

CATHODIC PROTECTION

SCALE IN FEET

Return to Revised Index

No.	DATE	REVISION	By
2	2/93	ADDED CATHODIC PROTECTION	JT

PETALUMA AQUEDUCT
RELOCATION OF THE DITCH AND CULVERT AT COTATI AVE

SCALE: AS SHOWN
DATE: 12/1/60
APPROVED Andrew W. Mills CHIEF ENGINEER RE 8271
DRAWN R G Jr - KIM
CHECKED G.R.S. RE 10702

SONOMA COUNTY FLOOD CONTROL AND WATER CONSERVATION DISTRICT

DESIGNED M. Hudis RE 10578
SUBMITTED O. J. Woodard RE 8557
DRAWING NUMBER 51-4-102.50

D112-7

PRINTED ON DIEPO NO. 1000H CLEARPRINT

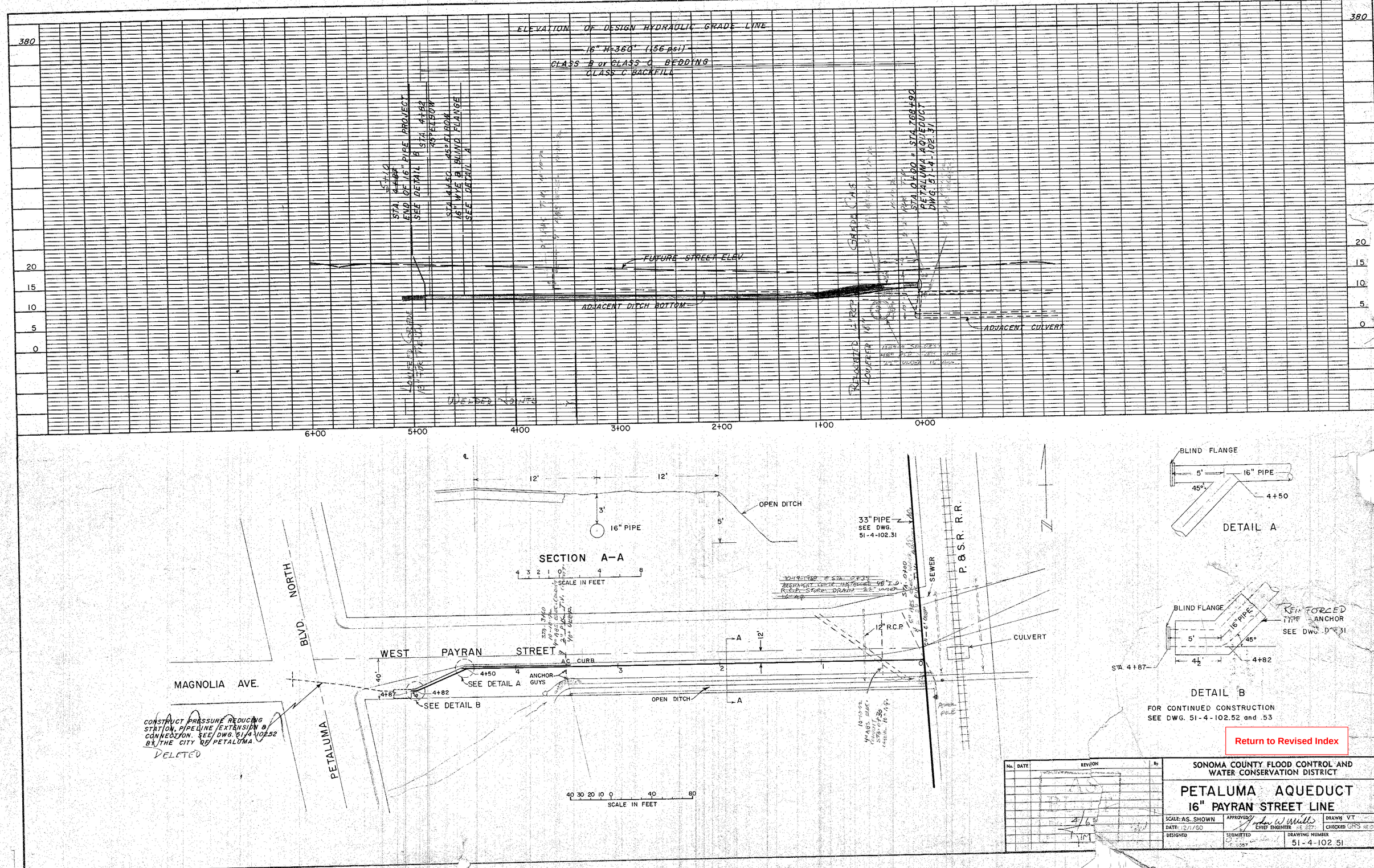

Return to Revised Index

No.	DATE	REVISION	By

SONOMA COUNTY FLOOD CONTROL AND WATER CONSERVATION DISTRICT

PETALUMA AQUEDUCT
16" PAYRAN STREET LINE

SCALE: AS SHOWN	APPROVED: CHIEF ENGINEER	DRAWN: VT
DATE: 12/1/60		CHECKED: GRS
DESIGNED	SUBMITTED	DRAWING NUMBER 51-4-102.51

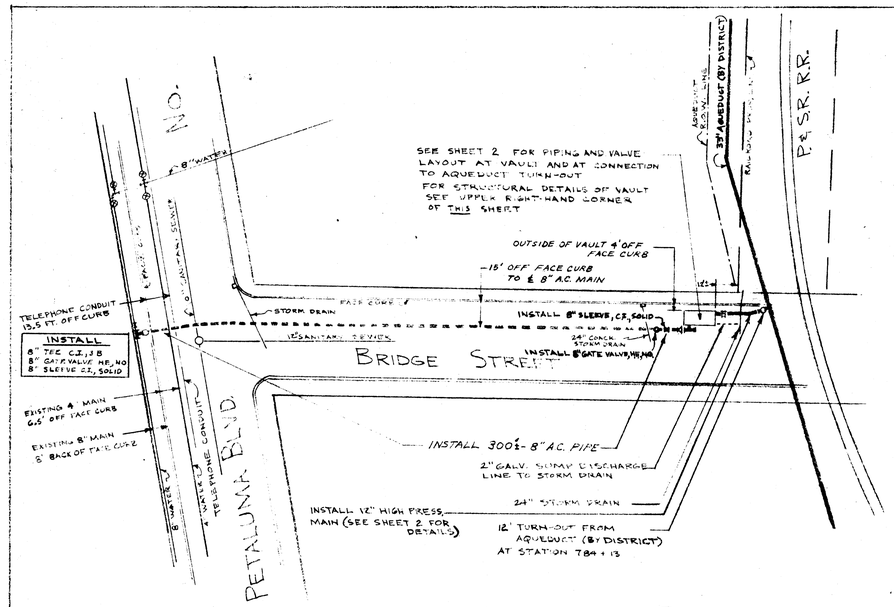

LOCATION PLANS

& NEW PIPE LINE INSTALLATIONS

SCALE: 1"=40'

ABBREVIATIONS

A.C. =	ASBESTOS CEMENT
B&B =	BELL AND BELL
3B =	3 BELL
4B =	4 BELL
C.I. =	CAST IRON
GALV. =	GALVANIZED
HE =	HUB END
N.O. =	NUT OPERATED
DIA. =	DIAMETER
MAX. =	MAXIMUM
PROP. =	PROPERTY

NOTES:

1. A VALVE BOX WITH EXTENSIONS AND TRAFFIC COVER (FORM NO. 12 OR APPROVED EQUAL) SHALL BE INSTALLED WITH EACH BURIED GATE VALVE

TYPICAL THRUST BLOCKING DETAIL

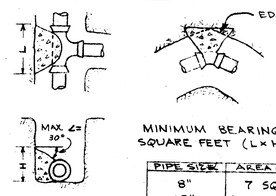

MINIMUM BEARING SURFACE IN SQUARE FEET (L × H) AS FOLLOWS:

PIPE SIZE	AREA (L×H)
8"	7 SQ. FT.
10"	10 " "
12"	15 " "
16"	25 " "

STRUCTURAL DETAILS OF CONCRETE VAULTS

SCALE: 3/8"=1'

NOTES:

1. ACCESS TO VAULT TO BE PROVIDED BY MEANS OF FORM #5 MAYWESTER BOX WITH TYPE 13 TRAFFIC COVER (WITH EXTENSIONS, AS REQ'D)
2. LOCATION OF ACCESS HATCH OPENING FOR EACH INSTALLATION IS SHOWN ON THE APPROPRIATE STATION LAYOUT DETAIL ON SHEET 2 (CITY OF PETALUMA)
3. 2-2" DIA. GALV. SLEEVES FOR ELECTRICAL SERVICE TO BE INSTALLED THROUGH ROOF OR WALL OF VAULT AS DIRECTED BY THE ENGINEER, OUTSIDE ENDS CAPPED.
4. 2" DIA. GALV. PIPE FOR SUMP PUMP DISCHARGE TO BE INSTALLED THROUGH WALL OF VAULT AS DIRECTED BY THE ENGINEER AND RUN TO NEAREST STORM DRAIN (SHOWN ON LOCATION MAP)
5. LOCATION OF SUMP SHOWN ON SHEET 2 (CITY OF PETALUMA)
6. CONCRETE SHALL BE CLASS "A", 6 SACK MIX, 1½" MAXIMUM AGGREGATE, CONFORMING TO THE REQUIREMENTS OF SECTION 13 OF THE STANDARD SPECIFICATIONS OF THE SONOMA COUNTY FLOOD CONTROL AND WATER CONSERVATION DISTRICT, DATED APRIL, 1959.

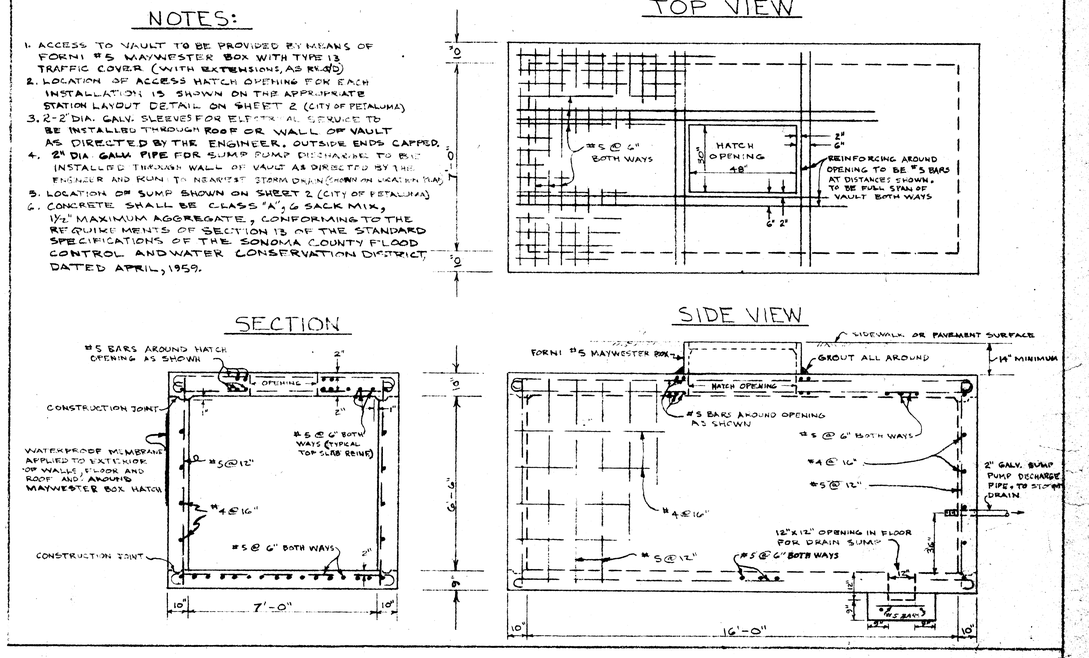

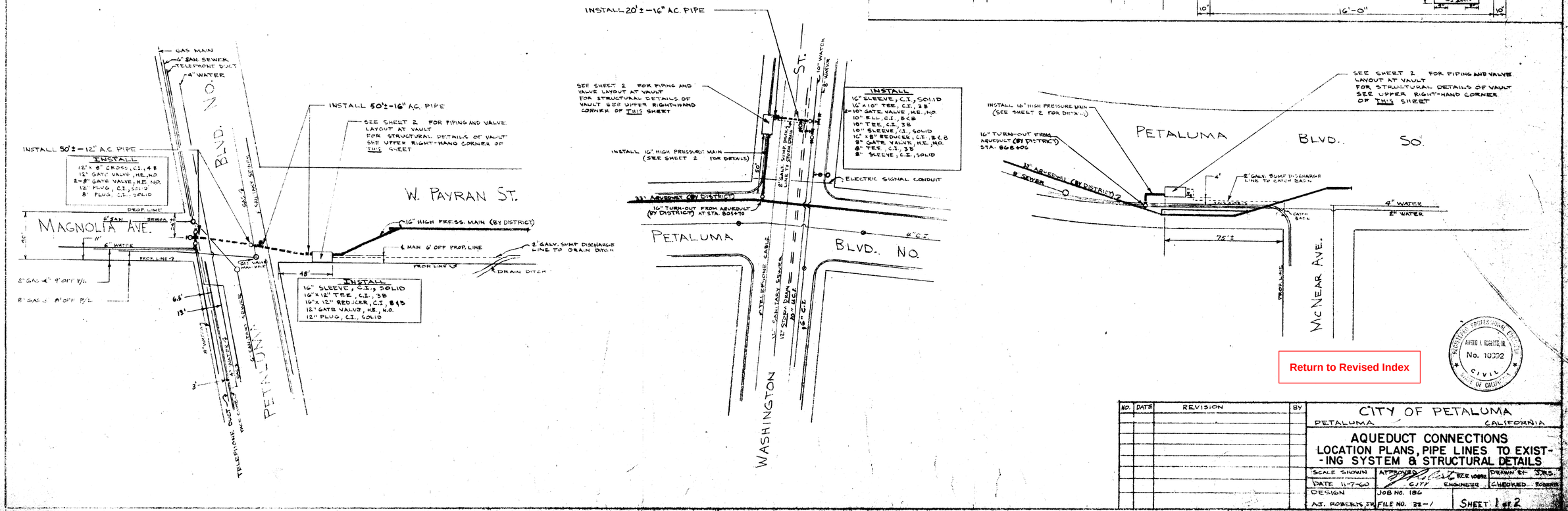

Return to Revised Index

NO.	DATE	REVISION	BY

CITY OF PETALUMA
PETALUMA CALIFORNIA

AQUEDUCT CONNECTIONS
LOCATION PLANS, PIPE LINES TO EXISTING SYSTEM & STRUCTURAL DETAILS

SCALE SHOWN	APPROVED RCE 10092 CITY ENGINEER	DRAWN BY J.R.S.
DATE 11-7-60		CHECKED ROBERTS
DESIGN A.J. ROBERTS JR.	JOB NO. 186 FILE NO. 22-1	SHEET 1 of 2

51-4-102.52

REGISTERED PROFESSIONAL ENGINEER ALFRED I. ROBERTS, JR. No. 10092 CIVIL STATE OF CALIFORNIA

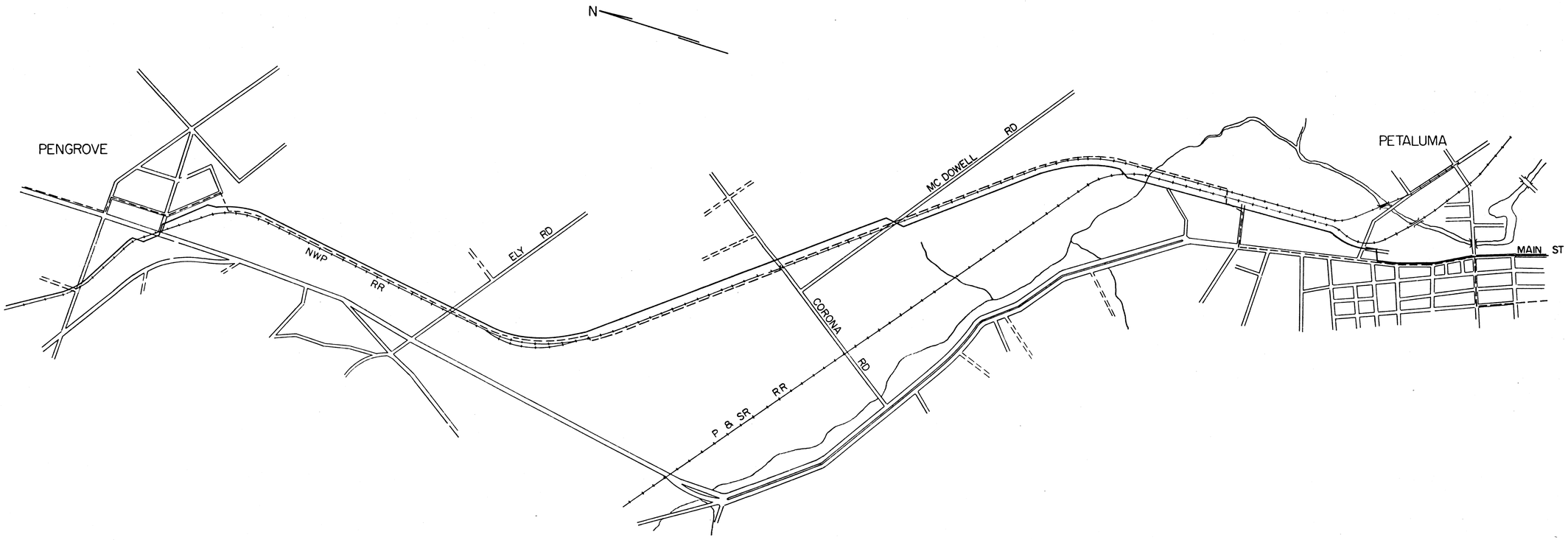

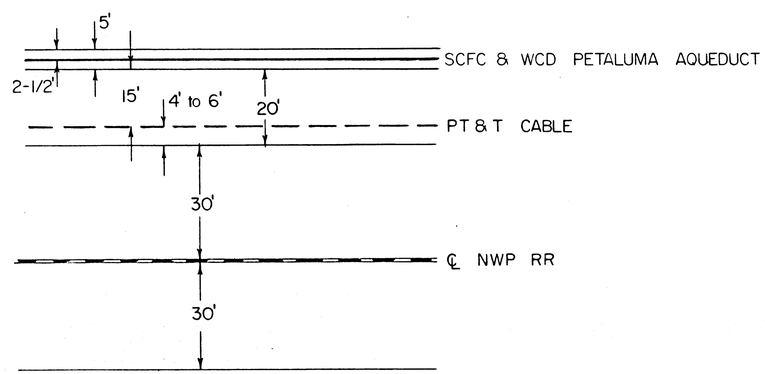

Return to Revised Index

CATHODIC PROTECTION

No.	DATE	REVISION	By
2	2/93	ADDED CATHODIC PROTECTION	JT

OVERLAY PT&T MAPS —— SECTIONS 8 & 9
SAN RAFAEL - SANTA ROSA —— A CABLE

SCALE: 1" = 1000'
DATE:
APPROVED
CHIEF ENGINEER
DRAWN KIM
CHECKED

SONOMA COUNTY FLOOD CONTROL AND WATER CONSERVATION DISTRICT

DESIGNED
SUBMITTED
DRAWING NUMBER 51-4-104.1

PRINTED ON DIEPO NO. 1000H CLEARPRINT

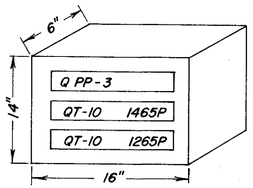

MC NEAR METER STATION

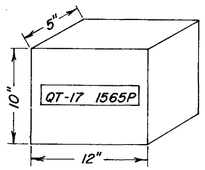

ELY METER STATION

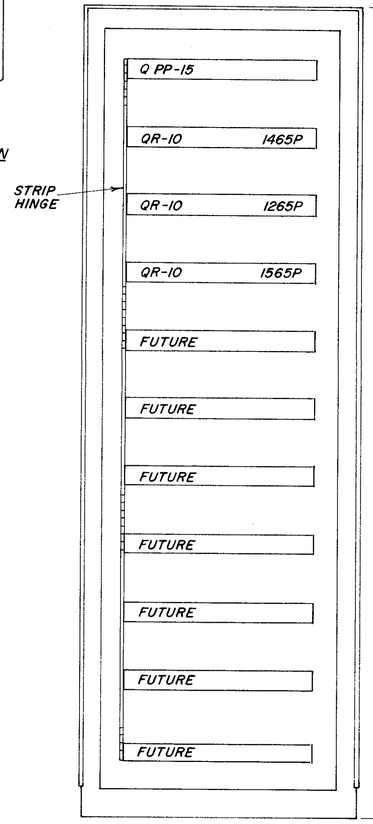

PETALUMA AQUEDUCT
WOHLER RECEIVER PANEL
SWINGING RACK

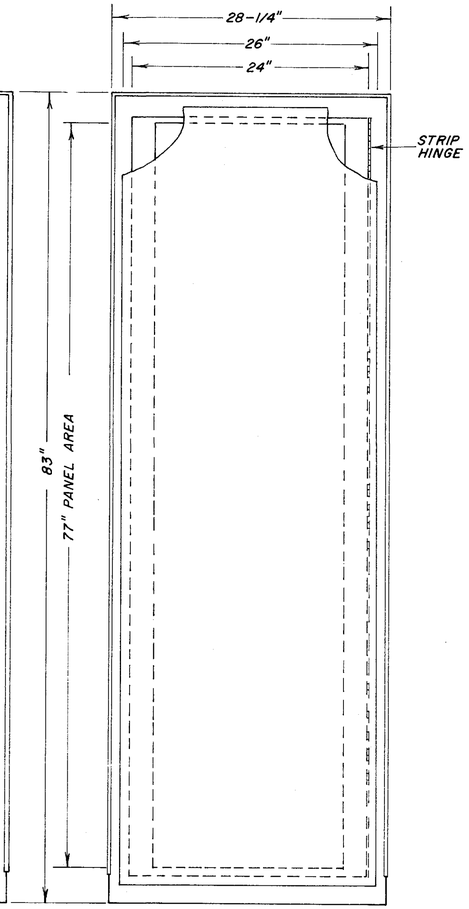

PETALUMA AQUEDUCT
WOHLER RECEIVER PANEL
OUTER DOOR

PETALUMA AQUEDUCT
TONE-TELEMETER EQUIPMENT

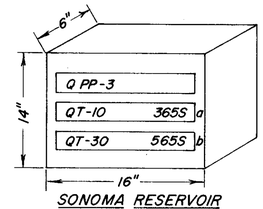

SONOMA RESERVOIR

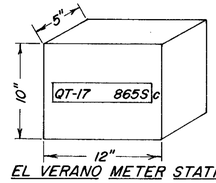

EL VERANO METER STATION

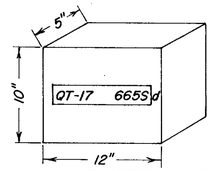

ELDRIDGE METER STATION

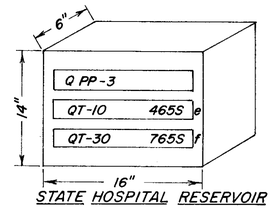

STATE HOSPITAL RESERVOIR

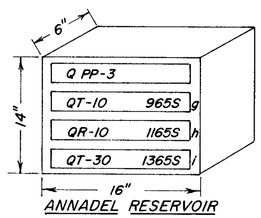

ANNADEL RESERVOIR

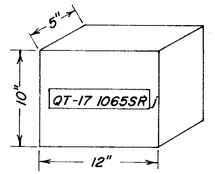

RALPHINE RESERVOIR

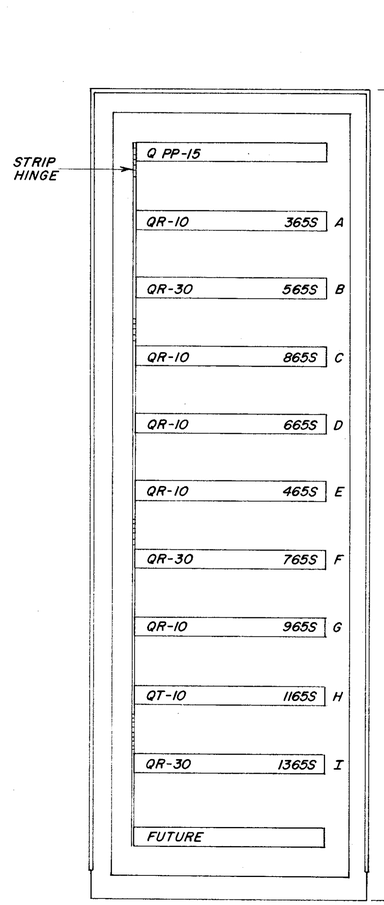

SONOMA AQUEDUCT
WOHLER RECEIVER PANEL
SWINGING RACK

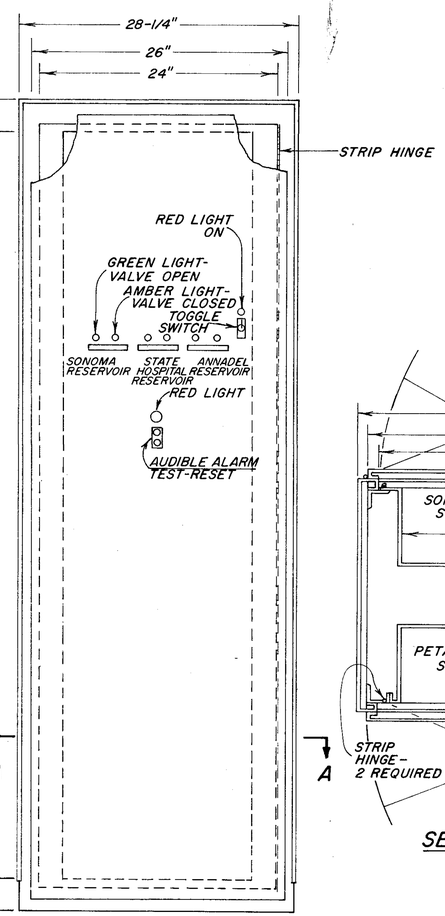

SONOMA AQUEDUCT
WOHLER RECEIVER PANEL
OUTER DOOR

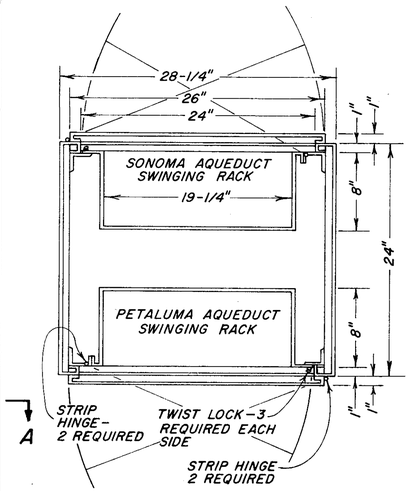

SECTION A-A

SONOMA AQUEDUCT
TONE-TELEMETER EQUIPMENT

AS BUILT
Date 5-1-68
By: [illegible]

LEGEND

P – PETALUMA AQUEDUCT
PP – POWER PACK
Q – QUINDAR OR APPROVED EQUAL
R – RECEIVER
S – SONOMA AQUEDUCT
T – TRANSMITTER
3, 10, 15, 17, 30 – TYPE OF EQUIPMENT
1465 – FREQUENCY
SR – SANTA ROSA

Return to Revised Index

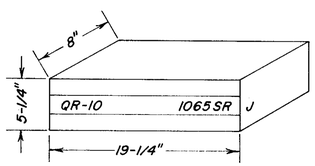

RALPHINE RECEIVER AT WOHLER

NOTES –

1. ALL DIMENSIONS MAY BE VARIED TO SUIT MANUFACTURER'S STANDARDS
2. REMOTE ENCLOSURES SHALL BE UNPAINTED; WOHLER RECEIVER PANEL SHALL BE PAINTED TO SUIT MANUFACTURER'S STANDARDS
3. BRISTOL AND SPARLING TRANSDUCER EQUIPMENT NOT SHOWN

NOT A PART OF THIS CONTRACT
FOR INFORMATION ONLY

No.	DATE	REVISION	By
1	11/5/63	DIMENSION & NOTE CHANGES	GRS

P.A. TELEMETERING EQUIPMENT
PLANS FOR
PETALUMA & SONOMA AQUEDUCTS

SCALE: 1/4" = 1 INCH | APPROVED [signature] CHIEF ENGINEER | DRAWN SKMc | CHECKED [signature]
DATE: OCT. 28, 1963

SONOMA COUNTY FLOOD CONTROL AND WATER CONSERVATION DISTRICT

DESIGNED GRS | SUBMITTED O.L.W. | DRAWING NUMBER 52-3-102.18

DIEPO NO. 1028 PAPERCLOTH

Pit 35-3c MICROFILMED