OFFICE SET #3

PROJECT TITLE Russian River - Jotati Intertie Project Pipeline Lay Dwgs - Contract #3, 'As Built'

OWNER Sonoma County Water Agency

DESCRIPTION 20"-48" WSP & CCP

PURCHASER W. M. Lyles

SPECIFICATION Project Plans & Specifications

ENGINEER Sonoma County Water Agency

(1) APPROVED — Subject To Corrections Required On Your Dwg. No.: 2.0, 3.0, 4.0, 1L1.0, 1L9.0, 1L13.0, 1L14.0, 20.0, 21.0, 1E4.0, 1F4A.0, 1F7.0, 1F8.0, 1F10.0, 1F11.0, 1F12.0, 1F15.0, 1F16.0, 1F17.0, 1F18.0, 1F22.0, 1F24.0, 1F25.0, 1F30.0, 1F33.0, 1F34.0, 1F35.0, 1F37.0, 1F40.0, 1F44.0, 1F46.0

By [signature] Date 1-19-76

SONOMA COUNTY WATER AGENCY

DESCRIPTION	SHEET NO.
Joint Detail Sheets	2-
Standard Drawings	20 -
1st Sub Layout Sheets	1L1 - 1L14
1st Sub Detail Sheets	1F1 - 1F46
1st Sub Buyout Sheets	1B1 - 1B7

(2) Dwg. 1F45.0 Is Not Approved; Revise & Resubmit.

(3) Dwg. 1B7.0 On Shoring Details Is Returned "Without Comment".

RECEIVED DEC 22 1975 SONOMA COUNTY WATER AGENCY

PRELIMINARY DEC 9 1975

John 1-27-76 63+69 To 72+00

LOCATION

NORTHERN CALIFORNIA DIVISION

KW 12-9-75 CONTRACT No. 3

2265 1.0

60-4-102.311.1

CONTINUED ON 1L3

BID ITEM	UNIT LENGTH	PIECE NO.	NO. REQ'D	DESCRIPTION	DETAIL DWG. REF.	SLOPE / HORIZ.	DIST.	PLAN LOOKING IN DIRECTION OF LAYING	INV. STATION–READ UP	PULL, BEVEL OR TURN	INV. ELEVATION	SLOPE TANGENT COSINE	PROFILE NOTE: VIEW FROM RIGHT SIDE OF PIPE
									98+64.74		98.40		
		39	1	STD	5	41.00 / 41.00			99+05.74		98.40	-0°04' .001294 .999999	
		38	1	STD	5	41.00 / 41.00			99+46.74	PULL 0°03' UP	98.50		
		37 / 30	8	STD 30, 31, 32, 33, 34, 35, 36, 37	5	328.00 / 328.00			102+74.74		99.10		
		29	1	SPC - CUT SPIGOT	1F45	41.00 / 41.00			103+15.74		99.20		
		28	1	SPC - CUT SPIGOT	1F45	41.00 / 41.00			103+56.74		99.30		
		27	1	2-CUT ELBOW - CUT SPIGOT	1F12	5.12 / 5.12			103+61.86	H Δ 45°00' lt	99.30		
						4.95 / 4.95			103+66.81		99.30		
		26	1	2-CUT ELBOW - CUT SPIGOT	1F11	4.95 / 4.95		2" P.H.* (1)	103+71.76	H Δ 45°00' rt	99.30		
				○ 2" PLUG		26.72 / 26.72			103+98.48	START 11 March Laid 2 Joints	99.40		ACCIDENT
		25	1	SPC - CUT SPIGOT	1F45	41.00 / 41.00			104+39.48		99.40		
		24	1	STD	5	41.00 / 41.00		7 Joints	104+80.48		99.50	-0°07' .001908 .999998	
		23	1	STD	5	41.01 / 41.01			105+21.49	PULL 0°08' UP	99.60		
		22 / 15	8	STD 15, 16, 17, 18, 19, 20, 21, 22	5	328.00 / 328.00			106+85 t	START 10 March Laid 7 Joints			
									108+49.48		101.00	-0°15' .004218 .999991	
		14	1	SPC BEVEL SECTION	1F1	41.00 / 41.00			108+90.48	BEV 2°09' UP	101.20	-2°24' .041790 .999128	

CONTINUED FROM 1L1

DRAWING NO. 60-4-102.306

48 SC 260 (240)

10 GA.

CONTRACT DRAWING REFERENCE

PIPE SIZE TYPE AND CLASS (JOINT DETAIL REFERENCE)

BILLING

(1) * 2" PASS HOLE

LAYOUT DRAWING

STATION 108+90.48 TO STATION 98+64.74

SYMBOL	REVISION	DATE	BY	APPV'D.

Ameron UTILITY PRODUCTS GROUP

RUSSIAN RIVER - COTATI INTERTIE PROJECT

DRAWN	CLL	11/7/75	CONTRACT NO. 3
CHECKED			
APPV'D.			2265 1L2.0

1000-1003 (7/75)

60-4-102.311.10

CONTINUED ON 1L4

CONTRACT DRAWING REFERENCE	PIPE SIZE, TYPE AND CLASS (JOINT DETAIL REFERENCE)	BID ITEM	UNIT LENGTH	PIECE NO.	NO. REQ'D	DESCRIPTION	DETAIL DWG. REF.	SLOPE / HORIZ.	DIST.	PLAN LOOKING IN DIRECTION OF LAYING	INV. STATION—READ UP	PULL, BEVEL OR TURN	INV. ELEVATION	SLOPE TANGENT COSINE	PROFILE NOTE: VIEW FROM RIGHT SIDE OF PIPE
DRAWING NO 60-4-102.306	48 SC 260 (240) 10 GA			65	1	2-CUT ELBOW-CUT SPIGOT	1F18	10.99 / 10.99			88+44.97		95.20		
								4.95 / 4.95			88+55.96	HΔ 45°00' rt	95.20		
				64	1	2-CUT ELBOW-CUT SPIGOT	1F17	4.95 / 4.95		CIRCULAR SECT. OF INT. LINING KNOCKED LOOSE, PATCHED 4-12-76	88+60.91		95.20		
						2" PLUG		20.85 / 20.85		2" P.H.	88+65.86	HΔ 45°00' lt	95.30		
				63	1	SPC CUT SPIGOT	1F45	41.00 / 41.00			88+86.71		95.30		
				62 / 55	8	STD 55, 56, 57, 58, 59, 60, 61, 62	5	328.00 / 328.00			89+27.71		95.50		START 3-26-76 FRI WITH PC # 62
				54	1	STD	5	41.03 / 41.03			92+55.71		96.80	-0°14' .003964 .999992	
				53 / 51	3	STD 51, 52, 53	5	123.00 / 122.99			92+96.74	PULL 0°28' up	97.00		START 3-25 THURS
				50	1	SPC BEVEL SECTION	1F1	40.91 / 40.91			94+19.73		98.50	-0°42' .012354 .999924	
				49	1	SPC SHORT SECTION W/ 2" OUTLET	1F16	35.06 / 35.06		2" THREDOLET	94+60.64 / 94+61.64	BEV 1°14' dn	99.00		4 PCS
				48	1	STD	5	41.01 / 41.01			94+95.70		98.70	+0°32' .009431 .999956	
			3-24	47 / 47A	1	SPC W/ 18" MANHOLE NUTS GASKET BOLTS	1F14 / 1F4A	41.03 / 41.03		18" MANHOLE	95+36.71 / 95+65.00	PULL 0°11' up	98.30	+0°21' .006109 .999981	START
			3-23	46 / 41	6	STD 41, 42, 43, 44, 45, 46	5	246.00 / 246.00			95+77.74	PULL 0°25' up	98.00		
			3-23	40	1	SPC W/ 8" OUTLET	1F13	41.00 / 41.00		8" TURNOUT	98+23.74 / 98+40.00 / 98+64.74		98.30 / 98.40	-0°04' .001294 .999999	

CONTINUED FROM 1L2

Ameron UTILITY PRODUCTS GROUP

RUSSIAN RIVER - COTATI INTERTIE PROJECT

LAYOUT DRAWING
STATION 98+64.74 TO STATION 88+44.97

SYMBOL	REVISION	DATE	BY	APPV'D.

DRAWN	CLL	11/10/75	CONTRACT NO. 3
CHECKED			
APPV'D.			2265

1L3.0

60-4-102.311.11

1000-1003 (7/75)

CONTINUED ON 1L5

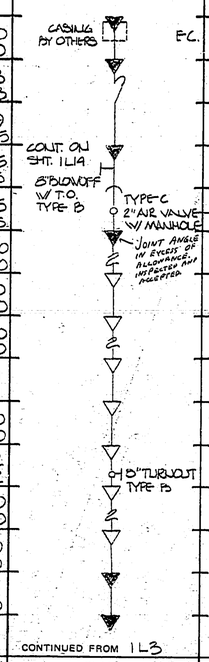

CONTRACT DRAWING REFERENCE	PIPE SIZE TYPE AND CLASS (JOINT DETAIL REFERENCE)	BID ITEM	UNIT LENGTH	PIECE NO.	NO. REQ'D	DESCRIPTION	DETAIL DWG. REF.	SLOPE HORIZ.	DIST.	PLAN LOOKING IN DIRECTION OF LAYING	INV. STATION—READ UP	PULL, BEVEL OR TURN	INV. ELEVATION	SLOPE TANGENT COSINE	PROFILE NOTE: VIEW FROM RIGHT SIDE OF PIPE
DRAWING NO. 60-4-102.305	48 SC 260 (260)			101	1	SPC - CUT SPIGOT	1F45	41.00 41.00		CASING BY OTHERS	74+04.07 E.C. 74+36.82		89.40		
				100	1	1-CUT ELBOW CUT SPIGOT	1F21	4.93 4.93			74+45.07		89.00	+0°29' .008876 .999963	
								15.79 14.85			74+50.00	MΔ 1°17' rt VΔ 20°20' up CΔ 20°23'	89.00		
				99/99A	1	1-CUT ELBOW W/ M.H. & 8" OUTLET / 99A BLD. FLG W/2" O.L.	1F20 / 1F15	3.35 3.15		CONT. ON SHT. 1L14	74+64.85		94.40	-19°51' .361111 .940554	
						NUTS ◯ BOLTS ◯ GASK ◯ CUT SPIGOT		23.95 23.95		8" BLOWOFF W/ T.O. TYPE B	74+67.50				
											74+68.00	VΔ 19°52 dn	95.50		
										TYPE C 2" AIR VALVE W/ MANHOLE	74+71.80				
											74+91.95		95.50		
				98/87	12	STD 87, 88, 89, 90, 91, 92 93, 94, 95, 96, 97, 98	5	492.00 492.00		JOINT ANGLE IN EXCESS OF ALLOWANCE, INSPECTED AND ACCEPTED	79+83.95		95.40	+0°01' .000138 1.000000	
				86	1	STD	5	41.00 41.00			80+24.95	PULL 0°10' dn	95.40		
				85/76	10	STD 76, 77, 78, 79, 80 81, 82, 83, 84, 85	5	410.00 410.00			84+34.94		94.20	+0°11' .003085 .999995	
				75	1	STD	5	41.01 41.01			84+75.96	PULL 0°11' up	94.00		
				74	1	STD	5	41.00 41.00			85+16.96		94.00	+0°00' .000000 1.000000	
				73/73A	1	SPC W/ 8" OUTLET / 73-A 8" 90° FLG EL. NUTS BOLTS GASK	1F19 / 1F19A	41.02 41.02		8" TURNOUT TYPE B	85+41.00				START
				72/68	5	STD 68, 69, 70, 71, 72	5	205.00 205.00			85+57.97	PULL 0°14' up	94.00		
				67	1	SPC - CUT SPIGOT	1F45	41.00 41.00			87+62.97		94.80		START MON 3-29-77
				66	1	SPC - CUT SPIGOT	1F45	41.00 41.00			88+03.97		95.00		
											88+44.97		95.20	-0°14' .003964 .999992	

CONTINUED FROM 1L3

DRAWING NO. 60-4-102.306 — 48 SC 260 (240) — 10 GA.

BILLING

Ameron UTILITY PRODUCTS GROUP

RUSSIAN RIVER - COTATI INTERTIE PROJECT

LAYOUT DRAWING
STATION 88+44.97 TO STATION 74+04.07

SYMBOL	REVISION	DATE	BY	APPV'D.

DRAWN	CLL	11/11/75	CONTRACT NO. 3
CHECKED			
APPV'D.			2265 60-4-102.311.12 1L4.0

1000-1003 (7/75)

CONTINUED ON 1L6

BID ITEM	UNIT LENGTH	PIECE NO.	NO. REQ'D	DESCRIPTION	DETAIL DWG. REF.	SLOPE HORIZ.	DIST.	PULL, BEVEL OR TURN	INV. ELEVATION	SLOPE TANGENT COSINE	PROFILE NOTE: VIEW FROM RIGHT SIDE OF PIPE
		123		1-CUT ELBOW-CUT SPIGOT	1F23	26.51 26.51					
						14.49 14.49					
		122	1	SPC CUT SPIGOT	1F45	41.00 41.00					
		121	1	1-CUT ELBOW-CUT SPIGOT	1F22	25.48 25.48					
				2" PLUG		15.53 15.53					
		120 119	11	STD 110, 111, 112, 113, 114, 115 116, 117, 118, 119, 120	5	451.00 450.99					
		109	1	STD	5	41.00 41.00					
		108	1	STD	5	41.00 41.00					
		107	1	STD	5	41.00 41.00					
		106	1	SPC BEVEL SECTION	1F1	40.89 40.89					
		105	1	SPC BEVEL SECTION	1F1	40.84 40.84					
		104	1	SPC BEVEL SECTION	1F1	40.84 40.84					
		103	1	SPC BEVEL SECTION	1F1	40.84 40.84					
		102	1	SPC BEVEL SECTION CUT SPIGOT	1F3	40.84 40.84					

CONTINUED FROM 1L4

PLAN — LOOKING IN DIRECTION OF LAYING

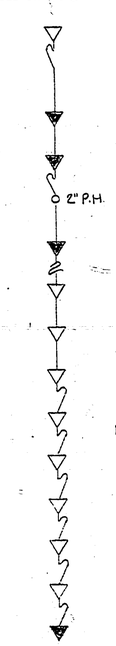

INV. STATION—READ UP	PULL, BEVEL OR TURN	INV. ELEVATION	SLOPE TANGENT COSINE
65+02.81		96.30	
65+29.32	HΔ 11°42' lt	96.00	
65+43.81		95.80	
65+84.81		95.40	+0°38' .011055 .999939
66+10.29	VΔ 0°16'16" HΔ 10°16'17" CΔ 10°16'17"	95.10	
66+25.82		95.00	
70+76.81		92.10	+0°22' .006405 .999979
71+17.81	PULL 0°07' rt	91.80	
71+58.81		91.50	
71+99.81	PULL 0°06' rt	91.20	
B.C. 72+32.36			
72+40.71	BEV 3°03' rt	90.80	
72+81.85	BEV 4°28' rt	90.40	
73+22.39	BEV 4°28' rt	90.10	
73+63.23	BEV 4°28' rt	89.70	
74+04.07	BEV 4°33' rt	89.40	+0°29' .008576 .999963
E.C. 74+36.82			

CURVE DATA

R = 523.00'
Δ = 22°23'58"
T = 103.85
L = 204.46

BOTTOM MARKED TOP

CONTRACT DRAWING REFERENCE

PIPE SIZE, TYPE AND CLASS

(JOINT DETAIL) REFERENCE

BILLING

LAYOUT DRAWING

STATION 74+04.07 TO STATION 65+02.81

SYMBOL	REVISION	DATE	BY	APPV'D.

Ameron UTILITY PRODUCTS GROUP

RUSSIAN RIVER - COTATI INTERTIE PROJECT

DRAWN	CLL	11/11/75	CONTRACT NO. 3
CHECKED			
APPV'D.			226E 60-4-102.311.13 1L5.0

DRAWING NO. 60-4-102.306

48 SC 240 (240) — 10 bf.

48 SC 240 (240)

1000-1003

CONTINUED ON 1L7

CONTRACT DRAWING REFERENCE	PIPE SIZE TYPE AND CLASS (JOINT DETAIL REFERENCE)	BID ITEM	UNIT LENGTH	PIECE NO.	NO. REQ'D	DESCRIPTION	DETAIL DWG. REF.	SLOPE / HORIZ. DIST.	PLAN LOOKING IN DIRECTION OF LAYING	INV STATION—READ UP	PULL, BEVEL OR TURN	INV. ELEVATION	SLOPE TANGENT COSINE	PROFILE NOTE: VIEW FROM RIGHT SIDE OF PIPE
						NUTS / GASK. / BOLTS								
				150/150A	1	SPC W/18" MANHOLE / 150-A BLD. FLG. W/2" O.L.	1F14 / 7F15	41.00 / 41.00	TYPE C 2" AIR VALVE W/M.H.	53+96.42 / 54+00.00		105.00		
				149/143	7	STD 143, 144, 145, 146, 147, 148, 149	5	287.00 / 287.00		54+37.42		105.00		
										57+24.42		104.80		
				142	1	1-CUT ELBOW W/ BEVELED END - CUT SPIGOT	1F25	30.20 / 30.20	2" P.H.	57+54.62	HΔ 12°49' lt	104.80	+0°02' .000716 1.000000	
						2" PLUG		10.59 / 10.59		57+65.21	BEV 3°08' dn	104.70	+3°10' .055252 .998477	
				141	1	SPC BEVEL SECTION	1F1	41.00 / 40.94		58+06.14	BEV 2°57' up	102.50		
				140/133	8	STD 133, 134, 135, 136, 137, 138, 139, 140	5	328.00 / 328.00		61+34.14		101.20		
				132	1	SPC - CUT SPIGOT	1F45	41.00 / 41.00		61+75.14		101.10	+0°13' .003781 .999993	
				131	1	1-CUT ELBOW-CUT SPIGOT	1F24	21.60 / 21.60	2" P.H.	61+96.74	VΔ 1°40' dn; HΔ 22°59' lt; CΔ 23°02'	101.00		OK
						2" PLUG		19.34 / 19.33		62+16.07		100.40	+1°53' .032911 .999459	
				130	1	SPC BEVEL SECTION	1F1	41.00 / 40.98		62+57.05	BEV 1°15' up	99.00		TOP OF CROWN; +4.33' = 103.33; X OF STORM DRAIN
				129	1	STD	5	41.00 / 41.00		62+98.05		98.60		
				128	1	SPC BEVEL SECTION	1F1	40.93 / 40.93		63+38.97	BEV 1°57' lt	98.10		
				127	1	SPC BEVEL SECTION	1F1	40.85 / 40.84		63+79.02	BEV 5°00' lt; PULL 0°38' lt; HΔ 5°38'	97.60		
				126/124	3	STD 124, 125, 126	5	123.00 / 122.99		65+02.81		96.30	+0°38' .011085 .999939	

CONTINUED FROM 1L5

DRAWING NO. 60-4-102.305 — 102.304 — 48 SC 260 (240) — 10 GA.

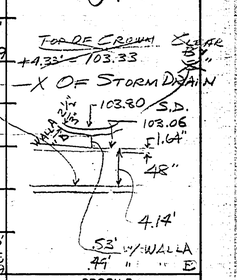

Ameron UTILITY PRODUCTS GROUP

RUSSIAN RIVER - COTATI INTERTIE PROJECT

LAYOUT DRAWING
STATION 65+02.81 TO STATION 53+96.42

SYMBOL | REVISION

DRAWN	CLL	11/12/75	CONTRACT NO. 3
CHECKED			
APPV'D			2265 60-4-102.311.14 1L6.0

1000-1003 (7/75)

DRAWING NO. 60-4-102.304 — 48 SC 260 (240) — 10 GA

CONTRACT DRAWING REFERENCE	PIPE SIZE, TYPE AND CLASS	(JOINT DETAIL) REFERENCE	BID ITEM	UNIT LENGTH (BILLING)	PIECE NO.	NO. REQ'D.	DESCRIPTION	DETAIL DWG. REF.	SLOPE / HORIZ.	DIST.	PLAN (LOOKING IN DIRECTION OF LAYING)	INV. STATION—READ UP	PULL, BEVEL OR TURN	INV. ELEVATION	SLOPE TANGENT COSINE	PROFILE NOTE: VIEW FROM RIGHT SIDE OF PIPE
					172	1	2-CUT ELBOW-CUT SPIGOT	1P27	4.24 4.23		CONTINUED ON L8	45+05.23		111.20	+4°41' .081999 .996655	
									26.02 26.02			45+09.46	VΔ 4°26'up HΔ 38°56'rt CΔ 39°06'	110.90		
					171 166	6	STD 166, 167, 168 169, 170, 171	5	246.00 246.00			45+35.48		110.80		
												47+81.48		109.70	+0°15' .002268 .999991	
					165	1	STD	5	41.00 41.00			48+22.48	PULL 0°52'dn	109.60		
					164	1	STD	5	41.00 40.99			48+63.47		108.80	+1°07' .019394 .999812	
					163	1	STD	5	41.06 41.05			49+04.52	PULL 0°46'up	108.00		
					162 158	5	STD 158, 159, 160, 161, 162	5	205.00 205.00			51+09.52		106.70	+0°21' .005790 .999982	
					157	1	SPC BEVEL SECTION	1F1	40.87 40.87			51+50.39	BEV 1°50'dn	106.50		
					156	1	SPC W/ 2" OUTLET	1F8	41.04 41.01		2" AIR VALVE TYPE C	51+52.00				
												51+91.39	PULL 1°01'rt	104.90		
					155	1	SPC-CUT SPIGOT	1F45	41.01 40.98			52+32.37	PULL 0°16'rt	103.40		
					154	1	SPC-CUT SPIGOT	1F45	41.00 40.97			52+73.34		101.80	2°11' .038044 .999277	
					153	1	2-CUT ELBOW-CUT SPIGOT	1F26	5.13 5.13			52+78.47	VΔ 3°49'up HΔ 39°13'rt CΔ 39°23'	101.60		
									36.12 36.10			53+14.57		102.70		
					152	1	STD	5	41.00 40.98			53+55.55		103.60	−1°38' .028616 .999591	
					151	1	SPC BEVEL SECTION	1F1	40.80 40.87			53+96.42	BEV 1°40'dn	105.00	+0°02' .000716 1.000000	
											CONTINUED FROM L6					

Ameron UTILITY PRODUCTS GROUP

RUSSIAN RIVER-COTATI INTERTIE PROJECT

LAYOUT DRAWING — STATION 53+96.42 TO STATION 45+05.23

SYMBOL	REVISION	DATE	BY	APPV'D.

DRAWN	CLL	11/12/75	CONTRACT NO. 3
CHECKED			
APPV'D.			2265 60-4-102.311.15 L7.0

1000-1003 (7/75)

CONTRACT DRAWING REFERENCE	PIPE SIZE TYPE AND CLASS (JOINT DETAIL REFERENCE)	BID ITEM	UNIT LENGTH	PIECE NO.	NO. REQ'D	DESCRIPTION	DETAIL DWG. REF.	SLOPE / HORIZ.	DIST.	PLAN LOOKING IN DIRECTION OF LAYING	INV. STATION—READ UP	PULL, BEVEL OR TURN	INV. ELEVATION	SLOPE TANGENT COSINE	PROFILE NOTE: VIEW FROM RIGHT SIDE OF PIPE
DRAWING NO. 60-4-102.304	48 SC 260 (220)			190	1	SPC W/ 8" OUTLET	1F31	41.00 / 40.99		CONTINUED ON 1L9	37+78.51		120.30		
										8" TURNOUT TYPE B	37+97.00 / 38+19.50		119.40	+1°21' .023551 .999723	
				189	1	SPC BEVEL SECTION	1F1	40.86 / 40.86			38+60.35	BEV 1°58'dn	118.40	+3°19' .057860 .998330	
				188	1	SPC BEVEL SECTION	1F2	41.00 / 40.93			39+01.28	BEV 3°19'up	116.00		
				187	1	STD	5	41.00 / 41.00			39+42.28		116.00		
				186	1	SPC - CUT SPIGOT	1F45	41.00 / 41.00			39+83.28		116.00		
				185	1	2-CUT ELBOW - CUT SPIGOT	1F30	5.85 / 5.85		2" P.H.	39+89.13	HΔ 27°04'rt	116.00		
						2" PLUG		35.20 / 35.20			40+24.33		116.00		
	48 SC 260 (240) 10 GA.			184 / 183	2	STD	5	82.00 / 82.00			41+06.33		116.00	+0°00' .000000 1.000000	
				182	1	STD	5	41.00 / 41.00			41+47.33	PULL 0°42'dn	116.00		
				181 / 177	5	STD. 177, 178, 179, 180, 181	5	205.00 / 204.98			43+52.31		113.50	+0°42' .012327 .999924	
				176	1	STD	5	41.05 / 41.05			43+93.36	PULL 0°42'up	113.00		
				175	1	SPC - CUT SPIGOT	1F45	41.00 / 41.00			44+34.36		113.00		
				174	1	SPC W/ 12" OUTLET - CUT SPIGOT	1F29	41.00 / 41.00		12" TURNOUT TYPE B	44+60.00 / 44+75.36		113.00	+0°00' .000000 1.000000	
				173	1	2-CUT ELBOW - CUT SPIGOT	1F28	8.49 / 8.49			44+83.85	VΔ 4°41'dn HΔ 38°39'rt CΔ 38°53'	113.00		
								21.46 / 21.38			45+05.23		111.20	+4°41' .081999 .996655	
										CONTINUED FROM 1L7					

BILLING

Ameron UTILITY PRODUCTS GROUP

RUSSIAN RIVER - COTATI INTERTIE PROJECT

LAYOUT DRAWING
STATION 45+05.23 TO STATION 37+78.51

SYMBOL	REVISION	DATE	BY	APPV'D.

DRAWN	CLL	11/13/75	CONTRACT NO. 3
CHECKED			
APPV'D.			2265 60-4-102.311.16 1L8.0

(7/75)

CONTINUED ON 1L10

DRAWING NO. 60-4-102.304

48 SC 260 (220) 10 GA.

BID ITEM	UNIT LENGTH	PIECE NO.	NO. REQ'D	DESCRIPTION	DETAIL DWG. REF.	SLOPE / HORIZ.	DIST.	PLAN LOOKING IN DIRECTION OF LAYING	INV. STATION—READ UP	PULL, BEVEL OR TURN	INV. ELEVATION	SLOPE TANGENT COSINE	PROFILE NOTE: VIEW FROM RIGHT SIDE OF PIPE
		204	1	SPC - CUT SPIGOT	1F45	41.00 / 41.00			32+72.86		132.10		
		203	1	STD	5	41.00 / 41.00			33+13.86		131.90	+0°20' .005757 999998	
		202	1	SPC · CUT SPIGOT	1F45	41.01 / 41.00			33+54.86	PULL 0°39'dn	131.70		
		201	1	SPC · CUT SPIGOT	1F45	41.03 / 41.02			33+95.86	HΔ 0°15'lt	131.00	+0°59' .017188 999852	CORRECTION NEEDED
		200/200A	1	SPC W/ 18" MANHOLE (LUTS, BOLTS, GASKET)	1F14/1F44A	41.00 / 40.98		18" MANHOLE	34+36.89 / 34+71.00	VΔ 0°35'dn HΔ 0°53'lt CΔ 0°35'	130.20		
		199	1	SPC SHORT W/ FLANGED END & 2" OUTLET	1F34	7.26 / 7.26			34+77.87		129.10		
				48" VALVE BY OTHERS	—	1.25 / 1.25		2" AIR VALVE TYPE B	34+85.13		128.90		
		198	1	SPC SHORT W/ FLANGED END & 2" OUTLET - CUT SPIGOT	1F33	5.22 / 5.22		2" AIR VALVE TYPE B	34+86.38		128.90		
		197/197A	1	SPC W/ 18" MANHOLE (LUTS, BOLTS, GASKET)	1E14/1F44A	41.00 / 40.98		18" MANHOLE	34+91.60 / 35+00.00		128.70		
		196	1	SPC · CUT SPIGOT	1F45	41.00 / 40.99			35+32.58		127.60		
		195/193	3	STD 193, 194, 195	5	123.00 / 122.95			35+73.57		125.50	+1°34' .027403 999625	
		194	1	SPC · CUT SPIGOT	1F45	41.00 / 40.97			36+96.52	PULL 0°44'dn	123.10		
		191	1	1-CUT ELBOW	1F32	11.47 / 11.46			37+37.49		121.50	+2°18' .040234 999192	
						29.57 / 29.56			37+48.95	VΔ 0°57'up HΔ 13°20'rt CΔ 13°30	121.00		
									37+78.51		120.30	+1°21' .023551 999723	

CONTINUED FROM 1L8

CONTRACT DRAWING REFERENCE | PIPE SIZE, TYPE AND CLASS | (JOINT DETAIL) REFERENCE

BILLING

LAYOUT DRAWING
STATION 37+78.51 TO STATION 32+72.86

SYMBOL	REVISION	DATE	BY	APPV'D.

Ameron UTILITY PRODUCTS GROUP

RUSSIAN RIVER-COTATI INTERTIE PROJECT

DRAWN	CLL	11/1978	CONTRACT NO 3
CHECKED			
APPV'D.			

2265 60-4-102.311.17 1L9

1000-1003 (7/75)

CONTINUED ON 1L11

CONTRACT DRAWING REFERENCE	PIPE SIZE TYPE AND CLASS	(JOINT DETAIL REFERENCE)	BID ITEM	UNIT LENGTH	PIECE NO.	NO. REQ'D	DESCRIPTION	DETAIL DWG. REF.	SLOPE HORIZ.	DIST.	PLAN LOOKING IN DIRECTION OF LAYING	INV. STATION–READ UP	PULL, BEVEL OR TURN	INV. ELEVATION	SLOPE TANGENT COSINE	PROFILE NOTE: VIEW FROM RIGHT SIDE OF PIPE
					231	1	SPC BEVEL SECTION W/ 10" OUTLET	1F38	40.89 40.89		10" TURNOUT TYPE B	22+15.12 22+16.62		152.00	+0°00' .000000 1.000000	
					230 220	11	STD 220, 221, 222, 223, 224, 225, 226, 227, 228, 229, 230	5	451.00 450.82			22+56.01	BEV 1°38' dn	152.00		
					219	1	STD	5	41.07 41.05			27+06.83		139.20	+1°38' .028420 .999596	
					218 214	5	STD 214, 215, 216, 217, 218	5	205.00 204.99			27+47.88	PULL 1°04' up	138.00		
					213	1	SPC BEVEL SECTION - CUT SPIGOT	1F3	40.84 40.84			29+52.87		136.00	+0°34' .010004 .999950	
					212	1	1-CUT ELBOW W/ BEVELED END - CUT SPIGOT	1F37	17.06 17.04			29+93.71	BEV 2°19' dn	135.60		
							2" PLUG		23.94 23.91		2" P.H.	30+10.75	HΔ 15°46' rt	134.70	+2°53' .050300 .998737	
					211 209	3	STD 209, 210, 211	5	123.00 123.00			30+34.66	BEV 2°33' up	133.50		
					208	1	SPC - CUT SPIGOT	1F45	41.00 41.00			31+57.66		132.80		
					207	1	SPC - CUT SPIGOT	1F45	41.00 41.00			31+98.66		132.50		
					206	1	2-CUT ELBOW - CUT SPIGOT	1F36	11.09 11.09			32+39.66		132.30		
									10.52 10.52			32+50.75	HΔ 45°00' lt	132.30		
					205	1	2-CUT ELBOW - CUT SPIGOT	1F35	6.45 6.45			32+61.27		132.20		
							2" PLUG		5.14 5.14		2" P.H.	32+67.72	HΔ 45°00' rt	132.20		
												32+72.86		132.20	+0°20' .005757 .999983	

CONTINUED FROM 1L9

DRAWING NO. 60-4-102.304 — NO. 60-4-102.303 — 48SC 260 (220) — 10 GA. — 48SC 260 (200)

BILLING

LAYOUT DRAWING
STATION 32+72.59 TO STATION 22+15.12

SYMBOL	REVISION	DATE	BY	APPV'D.

Ameron UTILITY PRODUCTS GROUP

RUSSIAN RIVER - COTATI INTERTIE PROJECT

DRAWN	CLL	11/14/75	CONTRACT NO. 3
CHECKED			
APPV'D.			2265 60-4-102.311.18 1L10.0

1000-1003 (7/75)

CONTINUED ON 1L12

CONTRACT DRAWING REFERENCE	PIPE SIZE TYPE AND CLASS (JOINT DETAIL REFERENCE)	BID ITEM	UNIT LENGTH	PIECE NO.	NO. REQ'D	DESCRIPTION	DETAIL DWG. REF.	SLOPE HORIZ. DIST.	PLAN LOOKING IN DIRECTION OF LAYING	INV. STATION—READ UP	PULL, BEVEL OR TURN	INV. ELEVATION	SLOPE TANGENT COSINE	PROFILE NOTE: VIEW FROM RIGHT SIDE OF PIPE
DRAWING NO 60-4-102303	48SC260 (160)			252	1	STD	5	41.00 40.95		13+54.80	PULL 0°55'up	185.80	+3°52' .067490 .997730	
				251	1	STD	5	41.04 40.99		13+95.75		183.60	+2°57' .051637 .998669	
				250	1	STD	5	41.00 40.97		14+36.73	PULL 0°37'up	181.50		
				249	1	SPC BEVEL SECTION	1F1	41.00 40.97		14+77.70		179.90	+2°20' .040797 .999169	
	48SC260 (180)			248 247	2	STD	5	82.00 81.99		15+18.67	BEV. 1°26'up	178.20		
				246	1	SPC BEVEL SECTION	1F1	40.88 40.87		16+00.66		176.90	+0°54' .015763 .999876	
				245 238	8	STD 238, 239, 240, 241 242, 243, 244, 245	5	328.00 327.66		16+41.53	BEV 1°44'dn	176.20		
				237	1	STD	5	41.00 40.96		19+69.19		161.20	+2°38' .045858 .998950	
				236	1	STD	5	41.00 40.91		20+10.14	PULL 1°06'dn	159.30		
	48SC260 (200)			235	1	SPC BEVEL SECTION	1F1	41.00 40.91		20+51.06		156.70	+3°44' .065239 .997879	DAMAGED [illegible]
				234 234A	1	SPC W/ 18" MANHOLE NUTS BOLTS GASKET	1F14 1F4A	41.04 41.02	18" MANHOLE	20+91.97 21+25.00	BEV 2°05'up	154.00	+1°39' .028950 .999581	DAMAGED SPIGOT REJECTED
				233	1	SPC CUT SPIGOT	1F45	41.08 41.07		21+32.99	PULL 0°31'up	152.80	+1°08' .019783 .999804	
				232	1	2-CUT ELBOW-CUT SPIGOT	1F39	38.32 38.32		21+74.06	PULL 1°08'up	152.00		
								2.74 2.74		22+12.38	HΔ 29°30'lt	152.00		
										22+15.12		152.00	+0°00' .000000 1.000000	

CONTINUED FROM 1L10

Ameron UTILITY PRODUCTS GROUP

RUSSIAN RIVER - COTATI INTERTIE PROJECT

LAYOUT DRAWING
STATION 22+15.12 TO STATION 13+54.80

SYMBOL	REVISION	DATE	BY	APPV'D.

DRAWN	CLL	11/17/75	CONTRACT NO. 3
CHECKED			
APPV'D.			2265 60-4-102.311.19 1L11.0

1000-1003

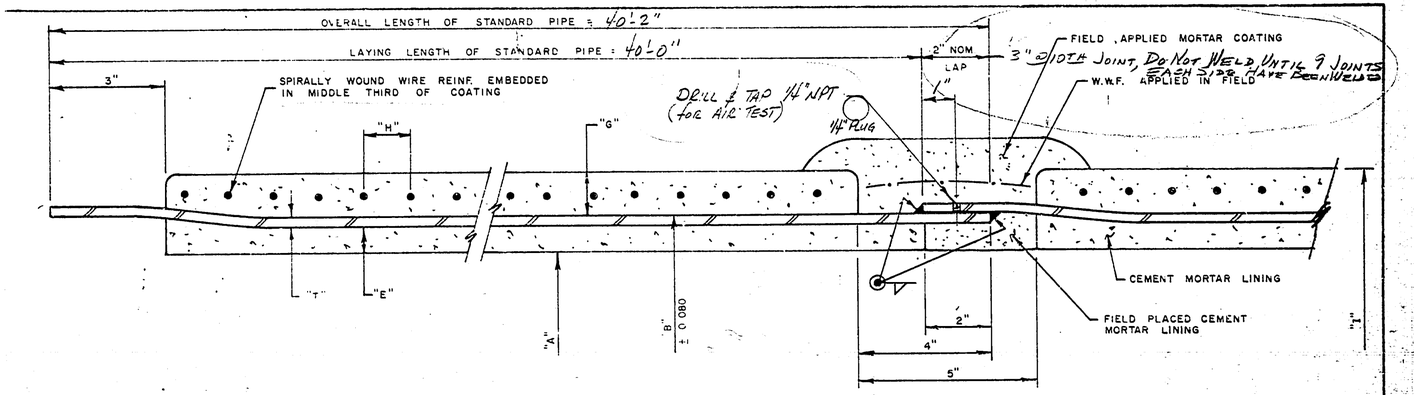

NOTE. BELL I.D. TO SPIGOT O.D.
TOLERANCE = .000" TO .120"

	MANUFACTURING DATA																INSTALLATION DATA				
				STEEL CYLINDER					LINING & COATING												
	NOMINAL PIPE I.D. "A" (IN)	MAX PIPE CLASS	BID ITEM	CLASS DESIGNATION	GAGE OR THICKNESS "T"	A_y / FT (SQ IN)	O.D CYL "B" (IN)	PLANT TEST PRESSURE (PSI)	CYL WEIGHT (LB/FT)	WIRE REINF. Ø	WIRE SPACING "H" (IN)	WIRE WEIGHT (LB/FT)			NOMINAL LINING THICKNESS "E" (IN)	MIN COATING THICKNESS "G" (IN)	MAX. PIPE O.D "I" (IN)	MAX PULL PER JOINT (ANGLE)	MIN. PULLED RADIUS USING 40 PIPE (FT)	OFFSET IN 40 FOR MAX. PULL (FT)	APPROX WEIGHT OF 40 PIPE (LBS)
t4 3151	48'	500		48SC500	3/8'	4.50	49.875	428	198.25	15GA	1.25	1.77			OK .50	.75	51.38	1°08'	2016	.79	16153

PIPE SPECIFICATION: AWWA C-200
CEMENT SPECIFICATION: ASTM C150 TYPE II
MIN. STEEL YIELD = 33,000 P.S.I.
WELDING: SUBMERGED ARC INSIDE & OUTSIDE
PLASTIC COVERS REQ'D

EXTERIOR PIPE MARKING: DATE COATING WAS APPLIED.
INTERIOR PIPE MARKING: 1.) PC. NO. 2.) CLASS DESIGNATION
3.) DATE OF MANUFACTURE
4.) MANUFACTURE'S TRADEMARK

Detail

Ameron PIPE PRODUCTS GROUP

RUSSIAN RIVER - COTATI INTERTIE PROJECT

SYMBOL	REVISION	DATE	BY	APPV'D

DRAWN	KW	12-8-75
CHECKED		
APPV'D		

2265 2.0

60-4-102.311.2

CONTINUED ON 1L13

CONTRACT DRAWING REFERENCE	PIPE SIZE, TYPE AND CLASS	(JOINT DETAIL) REFERENCE	BID ITEM	UNIT LENGTH	CONSTRUCT. PIECE NO.	NO. REQ'D	DESCRIPTION	DETAIL DWG. REF.	SLOPE HORIZ.	DIST.	PLAN LOOKING IN DIRECTION OF LAYING	INV. STATION—READ UP	PULL, BEVEL OR TURN	INV. ELEVATION	SLOPE TANGENT COSINE	"PROFILE" NOTE: VIEW FROM RIGHT SIDE OF PIPE
			BILLING													
DRAWING NO. 60-4-102.307	48 SCL 260 (100)	(EB)			266	1	1-CUT ELBOW-CUT SPIGOT	1F4D	34.90 34.85		2" P.H.	7+05.58		270.80	+3.00' .052527 .998628	
							○ 2" PLUG		5.99 5.96			7+40.43	V Δ 3°08'dn H Δ 1847.7' C Δ 1602'	269.00		
					267	1	SPC BEVEL SECTION	1F2	40.86 40.62			7+46.39		268.40	+6.08' .107249 .994187	
					268	1	SPC BEVEL SECTION	1F2	40.87 40.48			7+87.01	BEV 2°07'dn	264.00	+8.15' .145106 .989435	
					265	1	SPC BEVEL SECTION	1F2	41.00 40.37			8+27.46	BEV 1°48'dn	258.10	+10.03' .177854 .984134	
					264	1	SPC BEVEL SECTION	1F1	40.80 40.43			8+67.83	BEV 2°21'up	251.00	+7.42' .135830 .990988	
	48 SCL 260 (120)				263	1	SPC BEVEL SECTION	1F1	40.90 40.21			9+08.26	BEV 2°51'dn	245.80	+10.33' .186349 .982076	
					262	1	SPC BEVEL SECTION	1F1	41.00 40.10			9+48.47	BEV 1°28'dn	238.00	+12.01' .212784 .978102	
					261 261	2	STD	5	82.00 81.12			9+88.57	BEV 3°28'up	229.50		
	48 SCL 260 (140)	10 GA.			259	1	STD	5	41.02 40.88			10+69.69		217.50	+8.23' .147482 .989299	
					258 257	2	STD	5	82.00 81.17			11+10.27	PULL 0°13'up	211.50		
	48 SCL 260 (160)				256	1	SPC BEVEL SECTION	1F2	41.00 40.88			11+91.43		200.00	+8.10' .143427 .989673	
					255 254	2	STD	5	82.00 81.81			12+32.02	BEV 4°18'up	194.00		
					253	1	STD	5	41.06 40.97			13+13.83		188.50		
												13+54.80	PULL 0°55'up	185.80	+3.52' .061490 .997780	

CONTINUED FROM 1L11

LAYOUT DRAWING
STATION 13+54.80 TO STATION 7+05.58

SYMBOL	REVISION	DATE	BY	APPV'D.

Ameron UTILITY PRODUCTS GROUP

RUSSIAN RIVER-COTATI INTERTIE PROJECT

DRAWN	CLL	11/17/75	CONTRACT NO. 3
CHECKED			
APPV'D.			2265 60-4-102.311.20 1L12

1000-1003 (7/75)

DRAWING NO. 60-4-102.303

CONTRACT DRAWING REFERENCE	PIPE SIZE TYPE AND CLASS (JOINT DETAIL REFERENCE)	BID ITEM	UNIT LENGTH	PIECE NO.	NO. REQ'D	DESCRIPTION	DETAIL DWG. REF.	SLOPE HORIZ.	DIST.	PLAN LOOKING IN DIRECTION OF LAYING	INV. STATION—READ UP	PULL, BEVEL OR TURN	INV. ELEVATION	SLOPE TANGENT COSINE	PROFILE NOTE: VIEW FROM RIGHT SIDE OF PIPE
	36" 60' HD.			286	1	SPC W/ 4" OUTLET, CONCENTRIC REDUCER & FLANGE X BUTTSTRAP END BUTTSTRAP	1F43	(24.90) 20.54 20.54		CONCENTRIC REDUCER; 4" AIR VALVE TYPE A; BUTTSTRAP; FIELD CLOSURE END CONTRACTOR TO CUT PIPE TO REQUIRED LENGTH	0+[redacted]00		299.02		
											0+31.75	30.75			
				285	1	SPC SHORT SECTION W/ CUT BEVEL X BUTTSTRAP END SPIGOT	1F42	5.74 5.74			0+44.54		298.52	+0°00' .000000 1.000000	
				284	1	STD	5	41.00 40.91			0+50.28	BEV 3°43'dn	298.52		
				283	1	SPC BEVEL SECTION	1F2	41.00 40.91			0+91.19		295.80	+3°43' .065013 .197893	
	48 SC 260 (60)			282	1	STD	5	41.00 40.96			1+32.11	BEV 1°13'up	293.20		WRONG
				281	1	STD	5	41.00 40.96			1+73.07		291.50		
				280/280A	1	SPC W/ 48" TEE BOLTS NUTS GASKET	1F41/1F4	41.00 40.96	4A?	48" TEE	2+14.03		289.70		
											2+35.00				
											2+54.99		287.90	+2°30' .043561 .999053	
				279	1	STD	5	41.03 40.99			2+95.99	PULL 0°30'up	286.10		
	10 GA.			278 275	4	STD 275, 276, 277, 278	5	164.00 163.90			4+59.89		280.40	+2°00' .035054 .999386	
				274	1	STD	5	41.00 40.97			5+00.86	PULL 0°44'dn	279.00		
	48 SC 260 (80)			273	1	STD	5	41.00 40.95			5+41.81		277.00	+2°44' .047632 .998868	
				272	1	SPC BEVEL SECTION	1F2	41.00 40.95			5+82.77	BEV 1°18'up	275.00		
				271	1	STD	5	41.00 40.99			6+23.76		274.00	+1°26' .024919 .999690	
				270	1	SPC BEVEL SECTION	1F2	40.89 40.88			6+64.63	BEV 1°34'dn	273.00		
				269	1	STD	5	41.00 40.94			7+05.58		270.80	+3°00' .052527 .998623	

CONTINUED FROM 1L12

BILLING

Ameron UTILITY PRODUCTS GROUP

RUSSIAN RIVER-COTATI INTERTIE PROJECT

LAYOUT DRAWING STATION 7+05.58 TO STATION 0+24.00

SYMBOL	REVISION	DATE	BY	APPV'D.

DRAWN	CLL	11/18/75	CONTRACT NO. 3
CHECKED			
APPV'D.			2265 60-4-102.311.21 1L13.0

1000-1003 (7/75)

FLAG	ITEM NO.	QUANTITY THIS DWG.	DESCRIPTION	MATERIAL SPECIFICATION

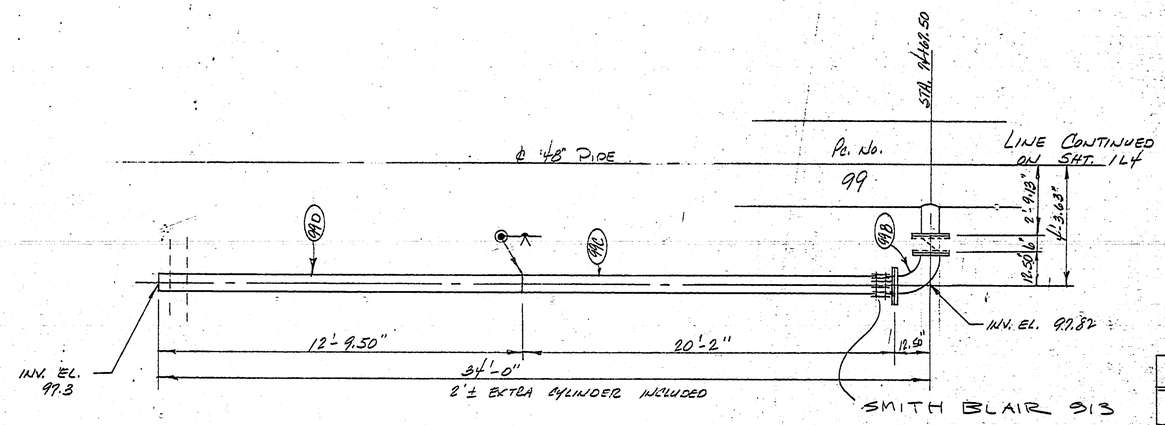

8" TURNOUT @ STA 74+67.50
PLAN VIEW
CONTR. DWG. REF. SHT. 60-4-102.308
LINE 059

Pc. No.	DETAIL SHEET
99B	1F44
99C	1F44
99D	1F46

SHIP LOOSE ITEMS
1- 8" FCA
1- 8" GASKET
8- 3/4" BOLTS
8- 3/4" NUTS

CHANGE ORDERS	SYMBOL	REVISION	DATE	BY	APPV'D.

UNLESS OTHERWISE SPECIFIED DIMENSIONS ARE IN INCHES
TOLERANCES

FRACT.	.X	.XX	.XXX	ANGLE
±	±	±	±	±

DWG. SCALE

Ameron PIPE PRODUCTS GROUP

RUSSIAN RIVER - CONTRACT #3

DRAWN	LW	12-8-75
CHECKED		
APPV'D.		

2265 1 LIN. O

60-4-102.311.22

1L4

FLAG	ITEM NO.	QUANTITY THIS DWG.	DESCRIPTION	MATERIAL SPECIFICATION

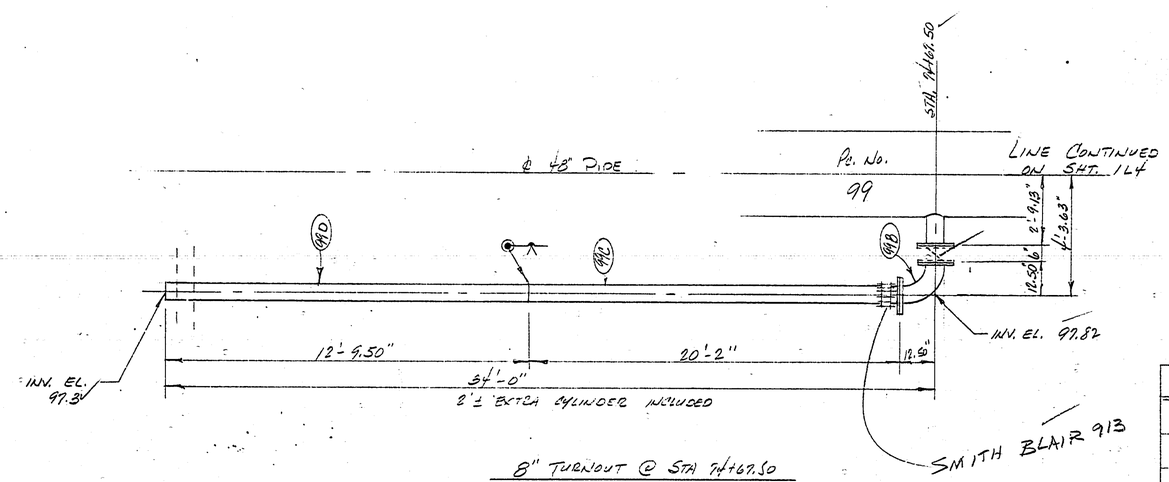

8" TURNOUT @ STA 74+67.50

PLAN VIEW

CONTR. DWG. REF. SHT. 60-4-102.308

LINE 059

Pc. No.	DETAIL SHEET
99B	1F44
99C	1F44
99D	1F46

SHIP LOOSE ITEMS

1- 8" FCA
1- 8" GASKET
8- 3/4" BOLTS
8- 3/4" NUTS

CHANGE ORDERS	SYMBOL	REVISION	DATE	BY	APPV'D.

UNLESS OTHERWISE SPECIFIED DIMENSIONS ARE IN INCHES

TOLERANCES				
FRACT.	.X	.XX	.XXX	ANGLE
±	±	±	±	±

DWG. SCALE

Ameron PIPE PRODUCTS GROUP

RUSSIAN RIVER - CONTRACT #8

DRAWN	LW	12-8-75
CHECKED		
APPV'D.		

2265 1L4.0

60-4-102.311.23

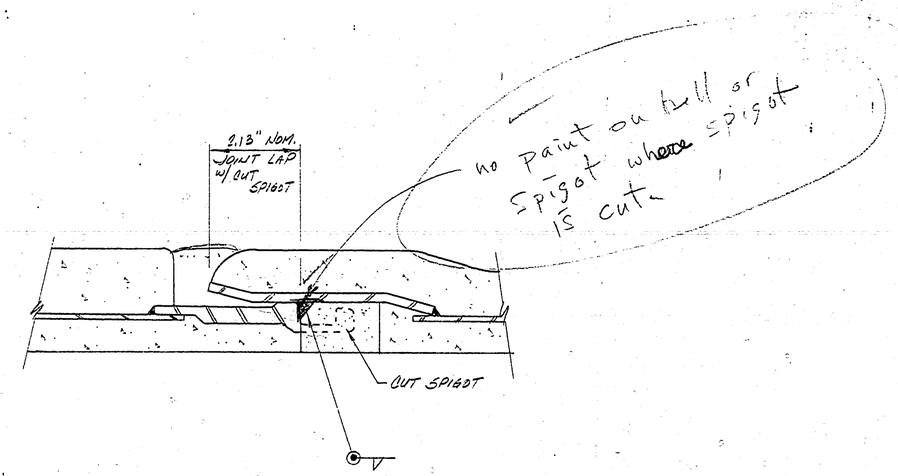

TYPICAL CUT SPIGOT, WELDED JOINT

Ameron PIPE PRODUCTS GROUP

RUSSIAN RIVER - COTATI INTERTIE PROJECT

SYMBOL	REVISION	DATE	BY	APPV'D.				
					DRAWN	LW	12-5-75	
					CHECKED			
					APPV'D.			

2265

60-4-102.311.24

20.0

1000-1004 (8/70)

21.0

FLAG	ITEM NO.	QUANTITY THIS DWG.	DESCRIPTION	MATERIAL SPECIFICATION

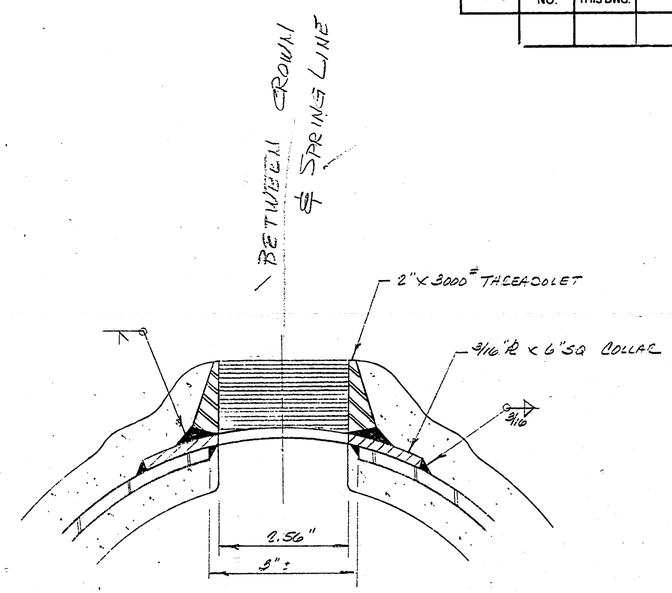

STANDARD 2" THREADOLET ATTACHMENT

CHANGE ORDERS	SYMBOL	REVISION	DATE	BY	APPV'D.

UNLESS OTHERWISE SPECIFIED DIMENSIONS ARE IN INCHES

TOLERANCES

FRACT.	.X	.XX	.XXX	ANGLE
±	±	±	±	±

DWG. SCALE

Ameron UTILITY PRODUCTS GROUP

RUSSIAN RIVER- COTATI INTERTIE PROJECT

DRAWN	KW	12-9-75
CHECKED		
APPV'D.		

2265 21.0

60-4-102.311.25

FLAG	ITEM NO.	QUANTITY THIS DWG.	DESCRIPTION	MATERIAL SPECIFICATION
	1	820"	49.875" O.D. X 10 GA. CYL.	

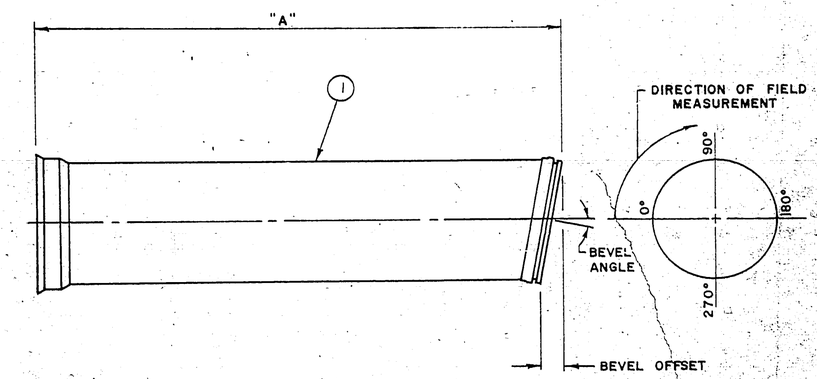

P.C. NO.	CUT SECT.	CLASS	"A"	BEVEL ANGLE	BEVEL OFFSET	F.T. LOCATION ANGULAR	F.T. LOCATION CIRCUM.	REF. SHT.
14	—	260	41'-3.25"	2°09'	1.87"	270°	117.49"	—
50	—		41'-3.25"	1°14'	1.07"	90°	39.16"	—
103	—		41'-3.25"	4°28'	3.90	180°	78.33	—
104	—		41'-3.25"	4°28'	3.90"	180°	78.33	—
105	—		41'-3.25"	4°28'	3.90"	180°	78.33	—
106	—		41'-3.25"	3°03'	2.66"	180°	78.33	—
127	—		41'-3.25"	5°00'	4.38"	0°	—	—
128	—		41'-3.25"	1°57'	1.70"	0°	—	—
130	—		41'-3.25"	1°15'	1.09"	270°	117.49"	—
141	—		41'-3.25"	2°57'	2.57"	270°	117.49"	—
151	—		41'-3.25"	1°40'	1.45"	90°	39.16"	—
157	—		41'-3.25"	1°50'	1.60"	90°	39.16"	—
189	—		41'-3.25"	1°58'	1.71"	90°	39.16"	—
231	—		41'-3.25"	1°38'	1.42"	90°	39.16"	—
235	—		41'-3.25"	2°05'	1.81"	270°	117.49"	—
246	—		41'-3.25"	1°44'	1.51"	90°	39.16"	—
249	—		41'-3.25"	1°26'	1.25"	270°	117.49"	—
262	—		41'-3.25"	3°38'	3.17"	270°	117.49"	—
263	—		41'-3.25"	1°28'	1.28"	90°	39.16"	—
264	—		41'-3.25"	2°51'	2.48"	90°	39.16"	—

Special

Ameron PIPE PRODUCTS GROUP

RUSSIAN RIVER COTATI INTERTIE PROJECT

CONTRACT NO. 3

2265

60-4-102.311.26

CHANGE ORDERS	SYMBOL	REVISION	DATE	BY	APPV'D.	DWG SCALE

UNLESS OTHERWISE SPECIFIED DIMENSIONS ARE IN INCHES
TOLERANCES
FRACT ± X ± XX ± XXX ± ANGLE ±

DRAWN CLL 12/1/75
CHECKED
APPV'D

INCH 1 2 3 4 5 6 7 8 9 10 11 12 13 14 15
BMI
METRIC 1 2 3 4 5 6 7 8 9 10 11 12 13 14 15

1F2

ITEM	ITEM NO.	QUANTITY THIS DWG.	ITEM DESCRIPTION	MATERIAL SPECIFICATION
	1	246'	49.875" O.D. x 10 GA. CYL.	

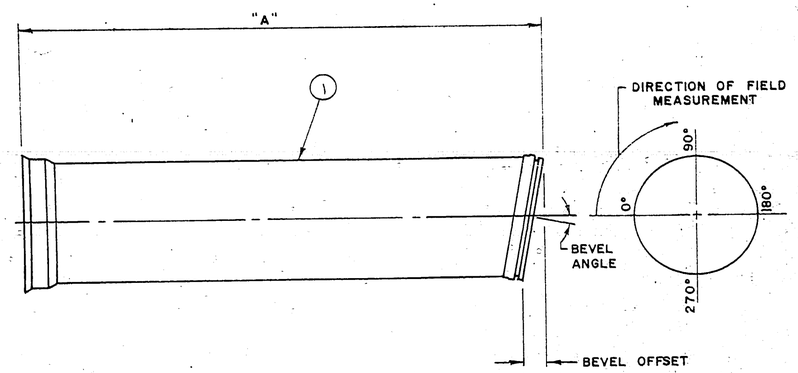

PC. NO.	CUT SECT.	CLASS	"A"	BEVEL ANGLE	BEVEL OFFSET	F.T. LOCATION ANGULAR	F.T. LOCATION CIRCUM.	REF. SHT.
265	—	260	41'-3.25"	2°21'	2.05"	270°	117.49"	—
266	—	[illegible]	41'-3.25"	1°48'	1.57"	90°	39.16"	—
267	—	[illegible]	41'-3.25"	2°07'	1.84"	90°	39.16"	—
270	—	[illegible]	41'-3.25"	1°34'	1.36"	90°	39.16"	—
272	—	[illegible]	41'-3.25"	1°10'	1.05"	270°	117.49"	—
283	—	[illegible]	41'-3.25"	1°13'	1.06"	270°	117.49"	—
12	—	240	41'-3.25"	1°16'	1.10"	90°	39.16"	—
188	—	[illegible]	41'-3.25"	3°19'	2.89"	270°	117.49	—
256	—	[illegible]	41'-3.25"	4°18'	3.75"	270°	117.49	—

CHANGE ORDERS	SYMBOL	REVISION	DATE	BY	APPV'D.

UNLESS OTHERWISE SPECIFIED DIMENSIONS ARE IN INCHES
TOLERANCES
FRACT ± | .X ± | XX ± | .XXX ± | ANGLE ±

DWG. SCALE

Ameron PIPE PRODUCTS GROUP

RUSSIAN RIVER - COTATI INTERTIE PROJECT

DRAWN CLL 12/1/75 CONTRACT NO. 3

CHECKED

APPV'D. 2265

60-4-102.311.27 1F2

FLAG	ITEM NO.	QUANTITY THIS DWG.	DESCRIPTION	MATERIAL SPECIFICATION
	1	—	49.875" O.D. X 10GA CYL.	

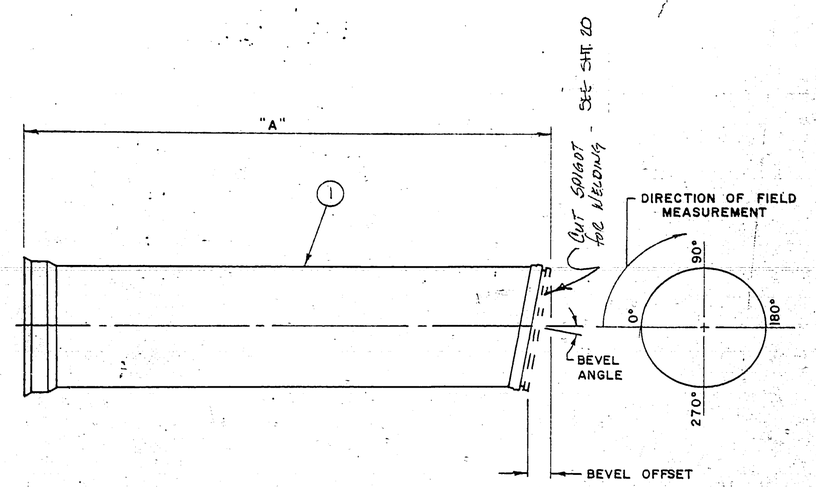

PC. NO.	CUT SECT.	CLASS	"A"	BEVEL ANGLE	BEVEL OFFSET	F.T. ANGULAR	LOCATION CIRCUM.	REF. SHT.
102	—	260	4 1/2-3.25"	4°33'	4.00"	180	—	
1b2	—		"	3°37'	2.75"	90	—	
212	—		"	2°33'	2.25"	270	—	
21b	—		"	2°18'	2.00"	90	—	
2b5	—	THB	6-3.25"	3°46'	3.25"	90°	39.16	

CHANGE ORDERS	SYMBOL	REVISION	DATE	BY	APPV'D

UNLESS OTHERWISE SPECIFIED DIMENSIONS ARE IN INCHES
TOLERANCES
FRACT ± X ± XX ± XXX ± ANGLE ±

DWG. SCALE

Ameron PIPE PRODUCTS GROUP

RUSSIAN RIVER - COTATI INTERTIE PROJECT

DRAWN CLL 12/1/75 CONTRACT NO. 3

CHECKED

APPV'D 2263

60-4-102.311.28 IF3.0

2-CUT

1F4

FLAG	ITEM NO	QUANTITY THIS DWG.	DESCRIPTION	MATERIAL SPECIFICATION
	1	16'-9.51"	34.875" O.D. X 10 GA. CYL.	
	2	1	31.875" O.D. X 34.875" O.D. X 33" LONG X 1/4" PL ROLLED CONCENTRIC REDUCER	
	3	2'-0"	31.875" O.D. X 5/16" PL CYL.	
	4	1	38.25" O.D. X 3/16" PL COLLAR ROLLED TO A 17.44" RADIUS	
	5	1	18" X 12.50" O.A.L. CL "D" SKIRTED FLG SEE SHT. 1B1	
	6	*	TENSION LUGS	

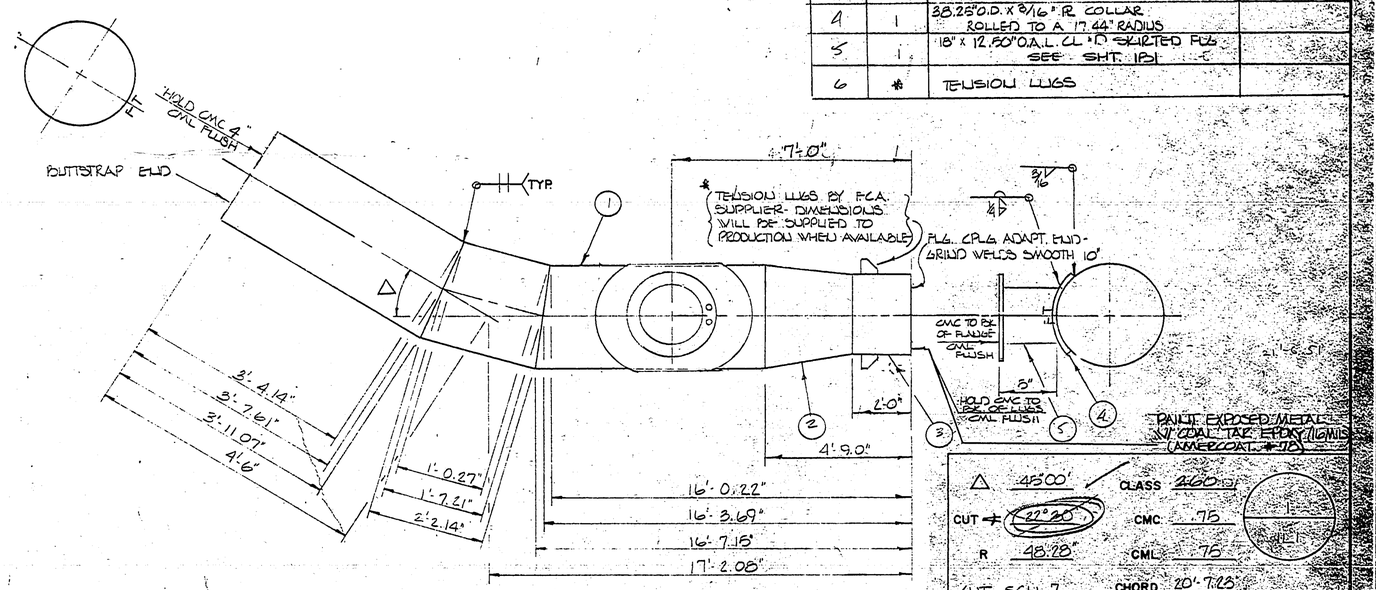

△	45°00'	CLASS	2.60
CUT ∢	22°30'	CMC	.75
R	48.28"	CML	.75
CUT SCH. 7		CHORD	20'-7.23"

Ameron PIPE PRODUCTS GROUP

RUSSIAN RIVER COTATI INTERTIE PROJECT

CHANGE ORDERS	SYMBOL	REVISION	DATE	BY	APPV'D.

UNLESS OTHERWISE SPECIFIED DIMENSIONS ARE IN INCHES

TOLERANCES

FRACT.	X	XX	XXX	ANGLE
±	±	±	±	±

DWG. SCALE

DRAWN	CLL	11/26/75	CONTRACT NO. 3
CHECKED			
APPV'D.			2265

1F4.0

60-4-102.311.29

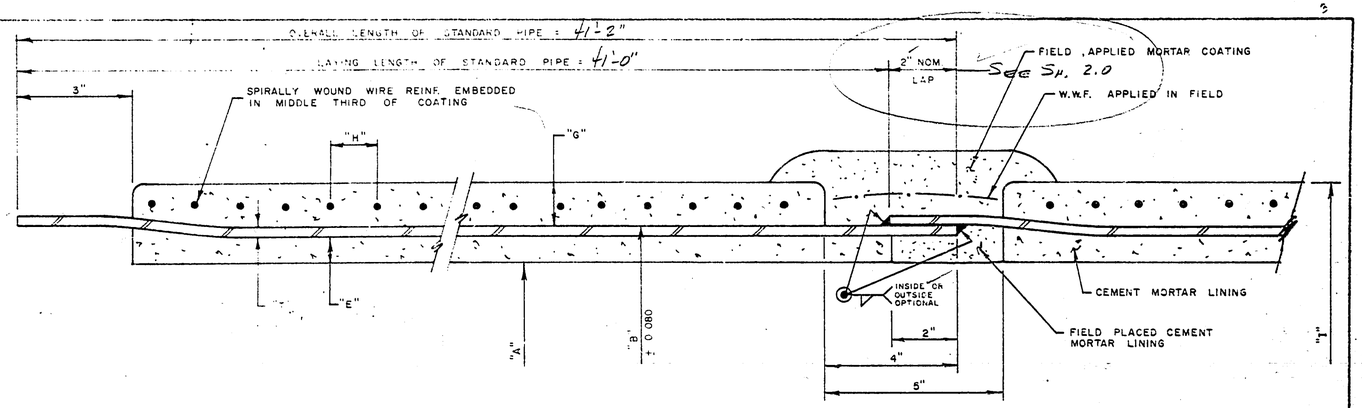

NOTE BELL I.D. TO SPIGOT O.D. TOLERANCE = .000" TO .120"

	MANUFACTURING DATA															INSTALLATION DATA				
	NOMINAL PIPE I.D "A" (IN.)	MAX PIPE CLASS (PSI)	BID ITEM	CLASS DESIGNATION	STEEL CYLINDER: GAGE OR THICKNESS "T"	STEEL CYLINDER: A (FT)	STEEL CYLINDER: O.D. CYL "B" (IN.)	STEEL CYLINDER: PLANT TEST PRESSURE (PSI)	STEEL CYLINDER: CYL WEIGHT (LB/FT)	LINING & COATING: WIRE REINF. Ø	LINING & COATING: WIRE SPACING "H" (IN)	LINING & COATING: WIRE WEIGHT (LB/FT)	LINING & COATING:	LINING & COATING:	LINING & COATING: NOMINAL LINING THICKNESS "E" (IN.)	LINING & COATING: MIN COATING THICKNESS "G" (IN.)	MAX. PIPE O.D. "I" (IN)	MAX PULL PER JOINT I (ANGLE)	MIN. PULLED RADIUS USING #1 PIPE (FT)	OFFSET IN #1 FOR MAX. PULL (FT)	APPROX WEIGHT OF #1 PIPE (LBS)
.2476	48	500		48SC500	5/16	3.75	49.875	463	165.41	15GA	1.25	1.77			.75	.75	51.38	1°08'	2073	.81	16900
	48	480		48SC480	1/4	3.00	49.875	361	132.50	15GA	1.25	1.77			.75	.75	51.38	1°08'	2073	.81	15547
.2178	48	440		48SC440	4GA (.2242)	2.69	49.875	324	118.87	15GA	1.25	1.77			.75	.75	51.38	1°08'	2073	.81	14973
.1782	48	360		48SC360	3/16	2.25	49.875	270	99.50	15GA	1.25	1.77			.75	.75	51.38	1°08'	2073	.81	14153
.1584	48	320		48SC320	8GA (.1644)	1.97	49.875	237	87.16	15GA	1.25	1.77			.75	.75	51.38	1°08'	2073	.81	13661

PIPE SPECIFICATION: AWWA C-201

CEMENT SPECIFICATION: ASTM C150 TYPE II

MIN. STEEL YIELD = 42,000 P.S.I.

WELDING: SUBMERGED ARC OUTSIDE, INNER SHIELD INSIDE } 10GA THRU 5/16"Ø

SUBMERGED ARC INSIDE & OUTSIDE > 5/16"Ø

SEE SHT. 2 FOR MARKING OF PIPE

Anderson PIPE PRODUCTS GROUP

RUSSIAN RIVER - COTATI INTERTIE PROJECT

REVISION	DATE	BY	APPV'D

DRAWN: KW 12-5-75

CHECKED:

APPV'D:

2265 3.0

60-4-102.311.3

1F4A

FLAG	ITEM NO.	QUANTITY THIS DWG.	DESCRIPTION	MATERIAL SPECIFICATION
	1	15	18" CL. "D" BLIND FLG. SEE SHT. 1B2	
	2	1	48" CL "D" BLIND FLG. SEE SHT. 1B2	

ADD HANDLES EXCEPT ON PC. NO. 280A

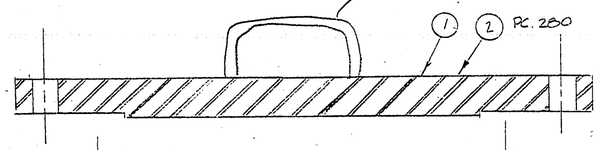

NOTE: COAT INSIDE BLIND FLG. W/ 2 COATS (16 MILS) COAL TAR EPOXY AMERCOAT #78

16" DIAM. OF COATING

49 3/8" DIAM. OF COATING - PC. 280-A ONLY

PC NO	REF. SHT.
1A	1L1
47A	1L3
197A	1L9
200A	1L9
234A	1L11
280A	1L13

E.F.

Ameron PIPE PRODUCTS GROUP

RUSSIAN RIVER - COTATI INTERTIE PROJECT

CONTRACT NO. 3

CHANGE ORDERS	SYMBOL	REVISION	DATE	BY	APPV'D.

UNLESS OTHERWISE SPECIFIED DIMENSIONS ARE IN INCHES

TOLERANCES: FRACT. ± | .X ± | .XX ± | .XXX ± | ANGLE ±

DWG. SCALE

DRAWN	CLL	12/9/75
CHECKED		
APPV'D.		

2265

1F4A0

60-4-102.311.30

FLAG	ITEM NO	QUANTITY THIS DWG.	DESCRIPTION	MATERIAL SPECIFICATION
	1	15'-0"	24.75" O.D. X 10 GA. ROLL-UP	
	2	2'-0"	24.75" O.D. X 1/4" R - ROLL-UP	
	3	*	Lugs	

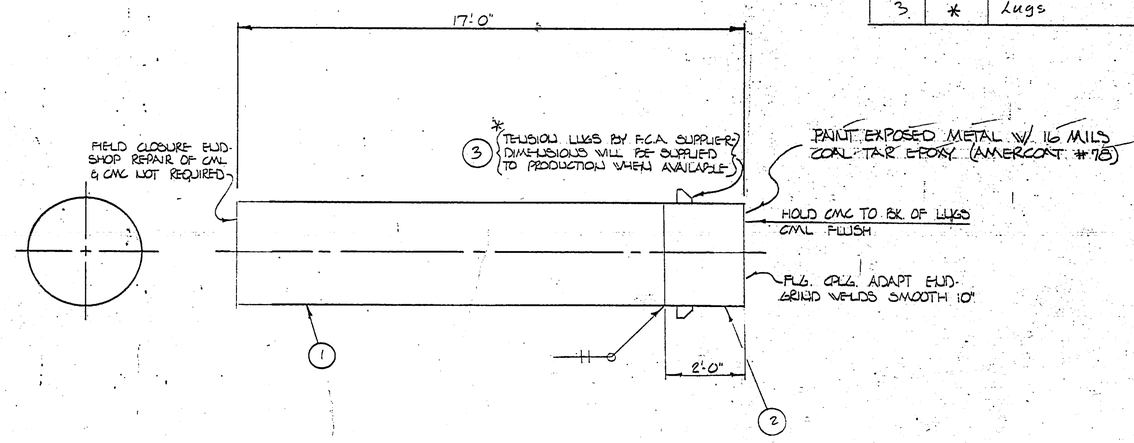

CLASS 260
CMC 76
CML 76

CHANGE ORDERS	SYMBOL	REVISION	DATE	BY	APPV'D.

UNLESS OTHERWISE SPECIFIED DIMENSIONS ARE IN INCHES

TOLERANCES

FRACT	.X	XX	.XXX	ANGLE
±	±	±	±	±

DWG. SCALE

Ameron PIPE PRODUCTS GROUP

RUSSIAN RIVER-COTATI INTERTIE PROJECT

DRAWN	CLL	12/1/76	CONTRACT NO. 3
CHECKED			
APPV'D.			2266 60-4-102.311.32

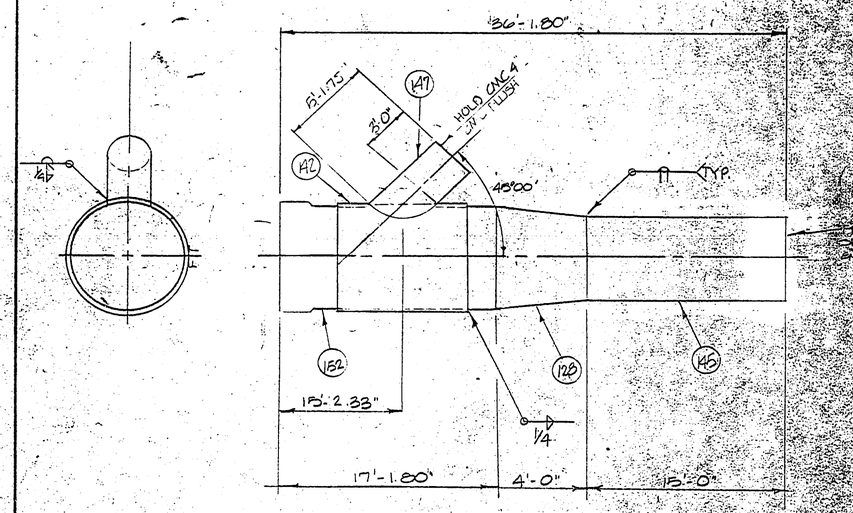

FLAG	ITEM NO	QUANTITY THIS DWG	DESCRIPTION	MATERIAL SPECIFICATION
	145	15'-00"	34.875 O.D. X 10 GA. CYL.	
	152	17'-1.80"	49.875 O.D. X 10 GA. CYL.	
	147	5'-6"	25.75 O.D. X 1/4 PL. ROLL UP	
	128	1	34.875 O.D. X 49.875 O.D. X 45° LONG X 1/4 PL. ROLLED CONCENTRIC REDUCER	
	142	1	60 WIDE X 3/16 PL. WRAPPER - ROLLED TO A 49.875 I.D. C.L. = 157.67"	

CLASS 250
CMC 5.75
CML 1.75
CUT SCH 7
CUT SCH 1

APPRO
JAN 21 1976

Ameron PIPE PRODUCTS GROUP

RUSSIAN RIVER COTATI INTERTIE PRO

UNLESS OTHERWISE SPECIFIED DIMENSIONS ARE IN INCHES
TOLERANCES
FRACT ± X ± XX ± XXX ± ANGLE ±

DRAWN CLL 11/20/75 CONTRACT NO. 3
CHECKED
APPV'D 2314

CHANGE ORDERS	SYMBOL	REVISION	DATE	BY	APPV'D
	△	changed to lap weld pipe (48")	1/15/76	CLL	

DWG. SCALE

60-4-102.311.31

INC. 1 2 3 4 5 6 7 8 9 10 11 12 13 14 15 BMI METRIC 1 2 3 4 5 6 7 8 9 10 11 12 13 14 15

4-CUT

F7

PLAN	ITEM NO.	QUANTITY THIS DWG.	DESCRIPTION	MATERIAL SPECIFICATION
	153	41'-2"	49.875" O.D. x 1/4" PL. CYL.	

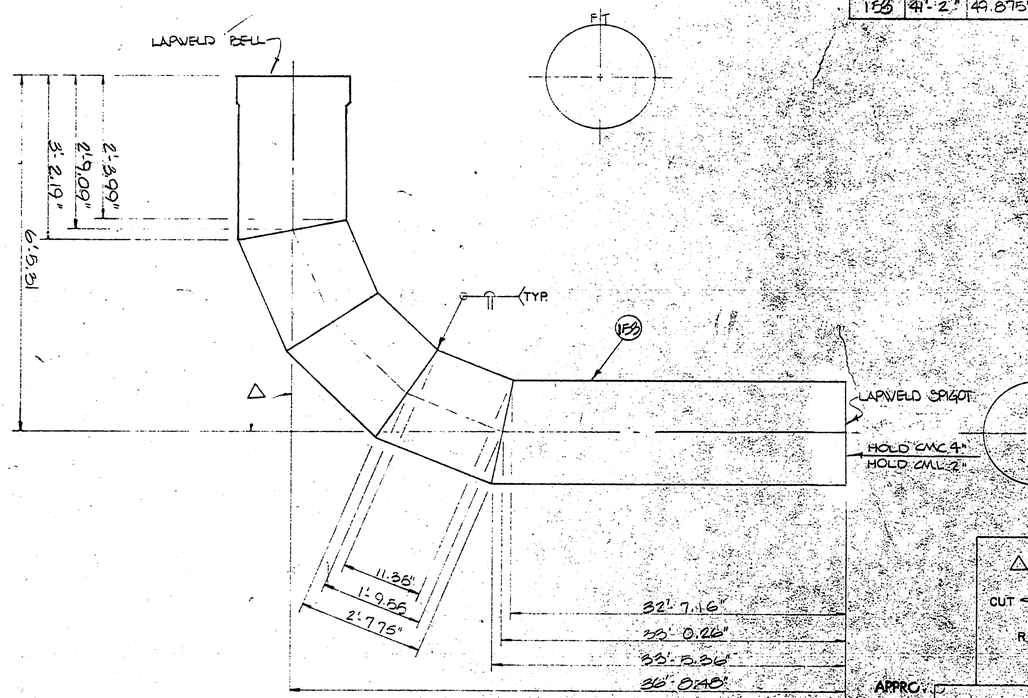

△	92°28'	CLASS	480
CUT ∢	11°34'	CMC	.75
R	52.68	CML	.75
		CHORD	36'-11.92"

APPRO.
JAN 21 1976

CHANGE ORDERS	SYMBOL	REVISION	DATE	BY	APPV'D	DWG. SCALE
	△	Changed to lap weld pipe & corrected cut angle	1/15/76	CLL		

UNLESS OTHERWISE SPECIFIED DIMENSIONS ARE IN INCHES
TOLERANCES
FRACT. X XX XXX ANGLES

RUSSIAN RIVER COTATI INTERTIE PROJECT

DRAWN CLL 12/1/75 CONTRACT NO. 3
CHECKED
APPV'D 2265 2314

60-4-102.311.33

FLAG	ITEM NO.	QUANTITY THIS DWG.	DESCRIPTION	MATERIAL SPECIFICATION
	152	41'-2"	49.875" O.D. X TO GA. CYL.	
	149	1	2" X 3000# THREDOLET, OL A 49.88" RUN	
	137	1	3/16" PL X 6" SQ. COLLAR - 2 OLL TO 24.94" R	

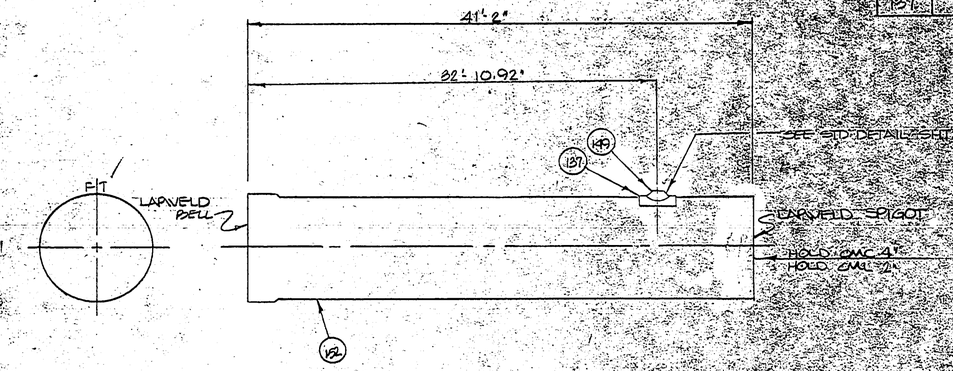

CLASS 260
CMC 75
CML 75

APPROVED
JAN 21 1976

Ameron PIPE PRODUCTS GROUP

RUSSIAN RIVER - COTATI INTERTIE PROJECT

UNLESS OTHERWISE SPECIFIED DIMENSIONS ARE IN INCHES
TOLERANCES
FRACT X XX XXX ANGLE

DRAWN 1/15/76
CHECKED
APPV'D 2314

CHANGE ORDERS	SYMBOL	REVISION	DATE	BY	APPV'D	DWG SCALE

60-4-102.311.34

1F8

FLAG	ITEM NO	QUANTITY THIS DWG	DESCRIPTION	MATERIAL SPECIFICATION
	1	82'-6.50"	49.875" O.D. x 10 GA. CYL.	
	2	2	2" - 3000# THREDOLET ON A 49.875" RUN	
	3	2	3/16" R x 6" SQ COLLAR ROLL TO 24.94" R.	

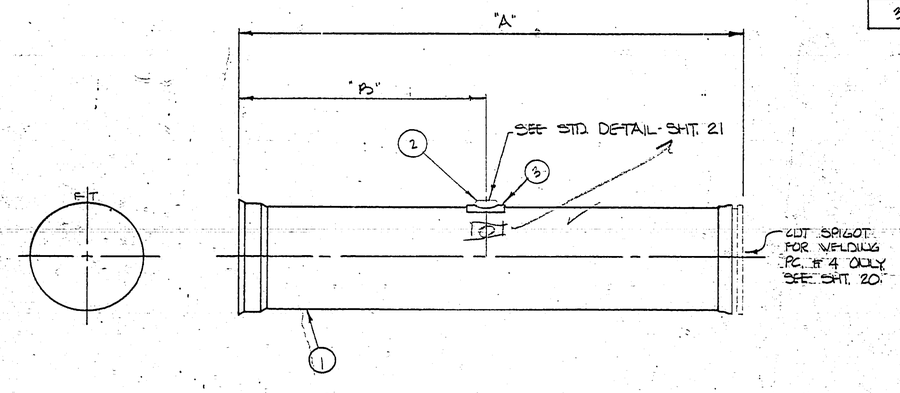

PC. NO.	CUT. SCH.	CLASS	"A"	"B"	REF SHT
4	—	240' HD.	41'-3.25"	32'-5.64"	1L1
156	—	240' HD.	41'-3.25"	1'-7.33"	1L7

CHANGE ORDERS	SYMBOL	REVISION	DATE	BY	APPV'D

UNLESS OTHERWISE SPECIFIED DIMENSIONS ARE IN INCHES
TOLERANCES

FRACT.	X	XX	XXX	ANGLE
±	±	±	±	±

DWG. SCALE

Ameron PIPE PRODUCTS GROUP

RUSSIAN RIVER - COTATI INTERTIE PROJECT

DRAWN	CLL	12/1/75	CONTRACT NO. 3
CHECKED			
APPV'D			2265 60-4-102.311.35 1F8.0

FLAG	ITEM NO.	QUANTITY THIS DWG	DESCRIPTION	MATERIAL SPECIFICATION
	152	24'-0.20"	49.875" O.D. x 10" GA. CYL.	
	157	1	4" WIDE x 3/16" R.B.S. BELL ROLLED TO 49.88" I.D. C.L. = 157.28	

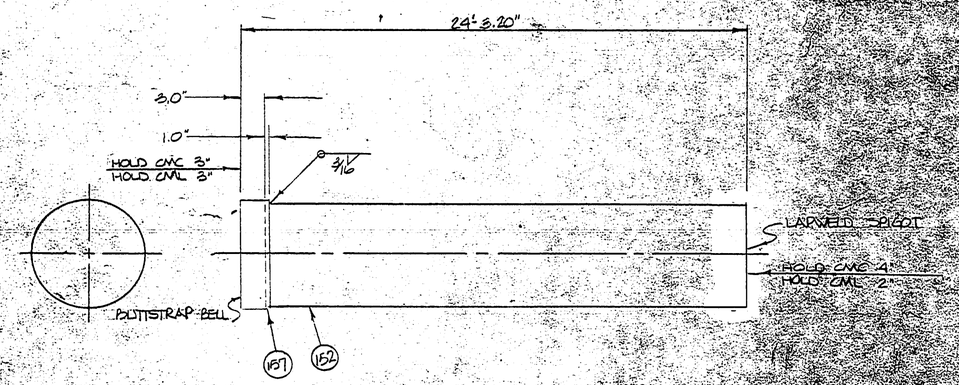

CLASS
CMC
CML
CUT SAT

APPROVED
JAN 21 1976

Ameron PIPE PRODUCTS GROUP

UNLESS OTHERWISE SPECIFIED DIMENSIONS ARE IN INCHES
TOLERANCES
FRACT X XX XXX ANGLE

RUSSIAN RIVER COTATI INTERTIE

DRAWN CLL 12/11/75 CONTRACT 1902
CHECKED
APPV'D 2225 2314

CHANGE ORDERS	SYMBOL	REVISION	DATE	BY	APPV'D
	△1	CHANGED TO LAP WELD	1/16/76	CLL	

DWG SCALE

1000 1000 (8/70)

60-4-102.311.36

FLAG	ITEM NO.	QUANTITY THIS DWG	DESCRIPTION	MATERIAL SPECIFICATION
	152	41'-2"	49875 O.D. x 10 GA. CYL.	
	156	1	1/4" PIPE CPLG.	

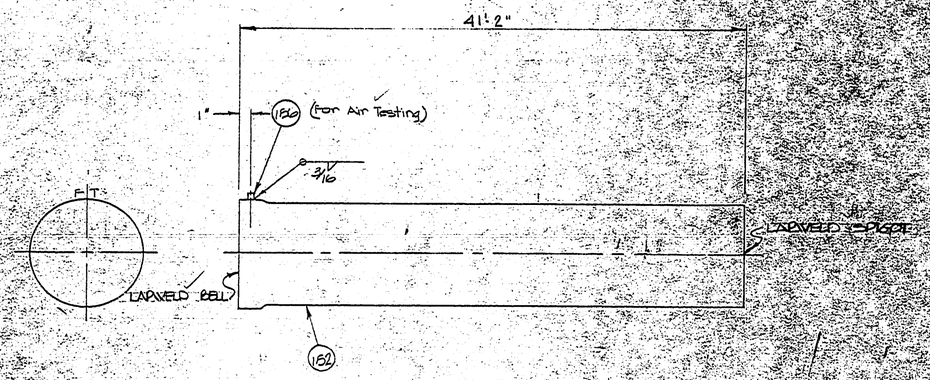

CLASS 220
CMC 75
CML 75

APPRO
JAN 21 1976

Ameron
PIPE PRODUCTS GROUP

UNLESS OTHERWISE SPECIFIED DIMENSIONS ARE IN INCHES
TOLERANCES
FRACT. X ± XX ± XXX ±
DWG SCALE

RUSSIAN RIVER COTATI INTERTIE PROJ.

DRAWN
CHECKED
APPV'D

60-4-102.311.37

CHANGE ORDERS	SYMBOL	REVISION	DATE	BY	APPV'D

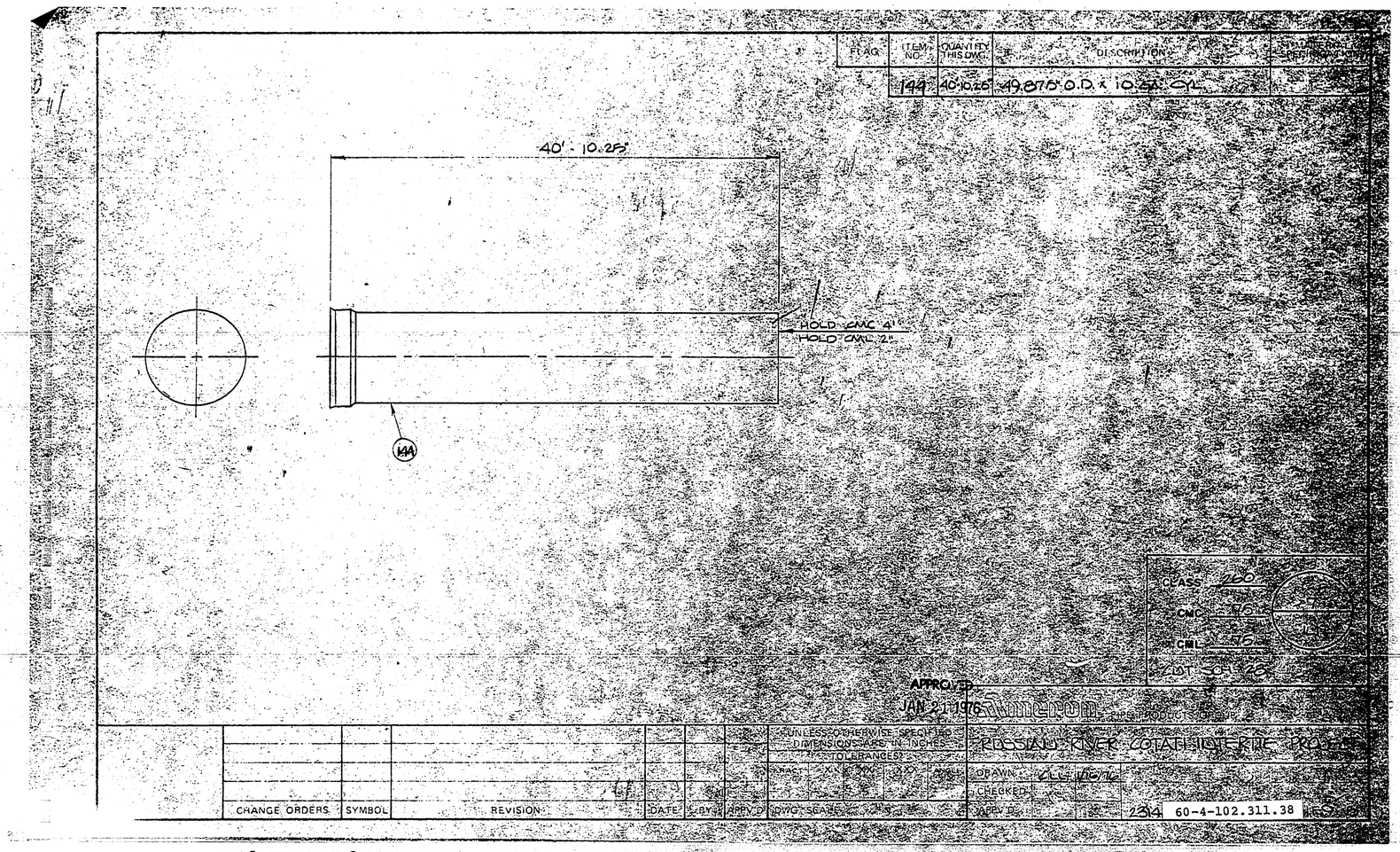

FLAG
ITEM NO.
QUANTITY THIS DWG.
DESCRIPTION
144
40'-10.25"
49.875" O.D. x 10.5A CYL
40' - 10.25"
HOLD CMC 4"
HOLD CML 2"
144
CLASS 260
CMC 75
CML 75
CUT SCH 28
APPROVED
JAN 21 1976
UNLESS OTHERWISE SPECIFIED DIMENSIONS ARE IN INCHES
TOLERANCES
FRACT
XX
XXX
ANGLE
DRAWN
CHECKED
APPV'D
CHANGE ORDERS
SYMBOL
REVISION
DATE
BY
APPV'D
DWG SCALE
RUSSIAN RIVER COTATI INTERTIE PROJECT
2314
60-4-102.311.38
INCH
METRIC
BMI

1F-10

FLAG	ITEM NO.	QUANTITY THIS DWG.	DESCRIPTION	MATERIAL SPECIFICATION
	1	41'-3.25"	49.875" O.D. x 10 GA. CYL.	
	2	1	2" 3000# THREDOLET ON A 49.875" RUN	
	3	1	9/16"R x 6"SQ COLLAR ROLL TO 24.81"R.	

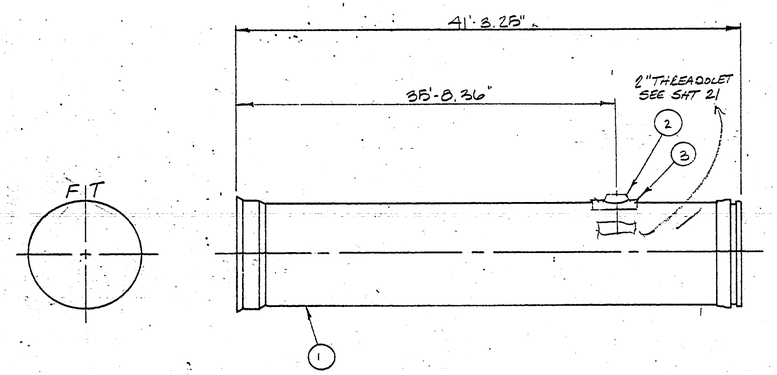

CLASS 240" HD
CMC .75
CML .75

Ameron PIPE PRODUCTS GROUP

RUSSIAN RIVER - COTATI INTERTIE PROJECT

CHANGE ORDERS	SYMBOL	REVISION	DATE	BY	APPV'D

UNLESS OTHERWISE SPECIFIED DIMENSIONS ARE IN INCHES
TOLERANCES

FRACT.	.X	.XX	.XXX	ANGLE
±	±	±	±	±

DWG. SCALE

DRAWN	CLL	12/1/75
CHECKED		
APPV'D		

CONTRACT NO. 5

2265 60-4-102.311.39 1F-10.0

185

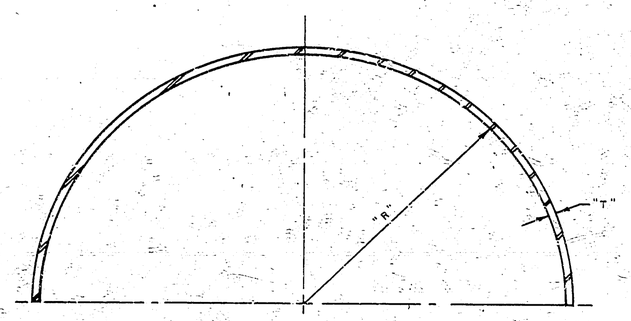

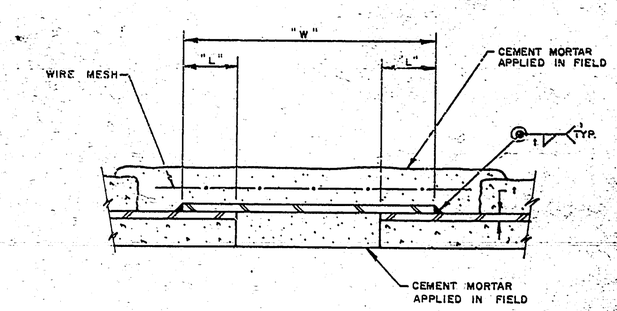

PIPE SIZE	MAT'L LIST NO	QUANTITY HALF B.S.	"T"	"W"	"R"	CUT LENGTH	"L"
24		2	1/4	6	12.88	40.84	2
33		2	1/4	6	17.44	55.17	2
48		2	1/4	6	24.94	78.74"	2

Ameron PIPE PRODUCTS GROUP

RUSSIAN RIVER - CONTRACT #3

SYMBOL	REVISION	DATE	BY	APPV'D.			
					DRAWN	LW	12-8-75
					CHECKED		
					APPV'D.		

2265

60-4-102.311.84

185.0

2-CUT

1F-11

FLAG	ITEM NO.	QUANTITY THIS DWG.	DESCRIPTION	MATERIAL SPECIFICATION
	1	31'-5.49"	49.875" O.D. x 10 GA. CYL.	
	2	1	48" M3516 SPIGOT	
	3	1	2" x 3000# THREADOLET	
	4	1	3/16" R x 6" SQ. COLLAR Roll To 24.94" R	ASTM A283 GRC

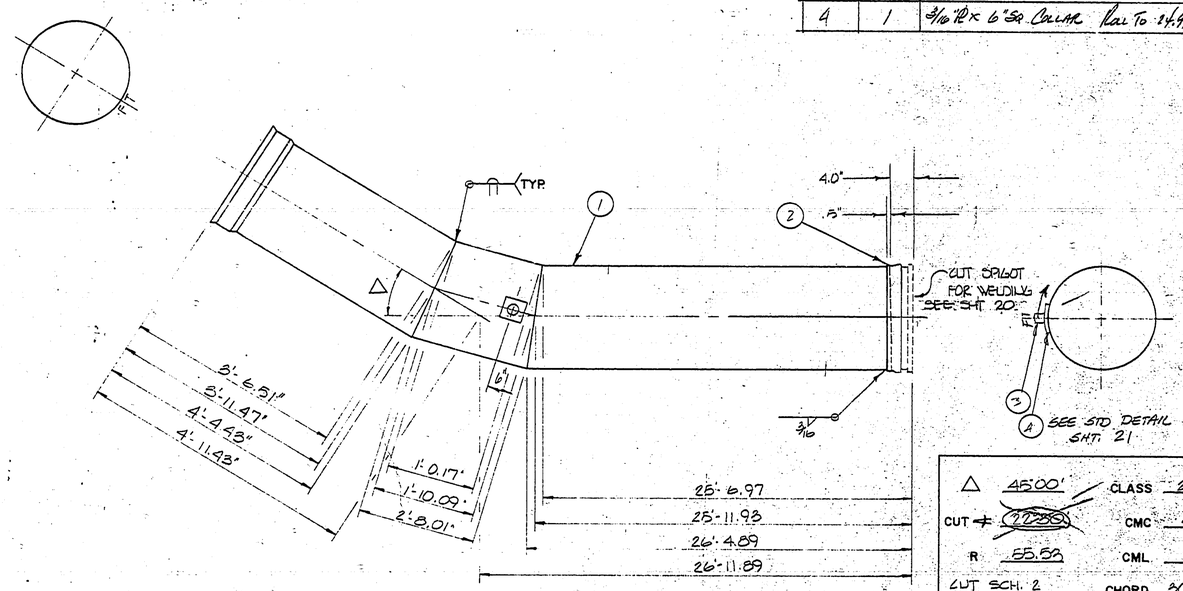

△	45°00'	CLASS	260
CUT ∢	~~22°30'~~	CMC	.75
R	55.53	CML	.75
CUT SCH. 2		CHORD	30'-8.32"

26 / 1L2

Ameron PIPE PRODUCTS GROUP

RUSSIAN RIVER - COTATI INTERTIE PROJECT

CHANGE ORDERS	SYMBOL	REVISION	DATE	BY	APPV'D.

UNLESS OTHERWISE SPECIFIED DIMENSIONS ARE IN INCHES

TOLERANCES

FRACT.	.X	XX	XXX	ANGLE
±	±	±	±	±

DWG. SCALE

DRAWN	CLL	12/2/75	CONTRACT NO. 3
CHECKED			
APPV'D			2265 60-4-102.311.40 1F11.0

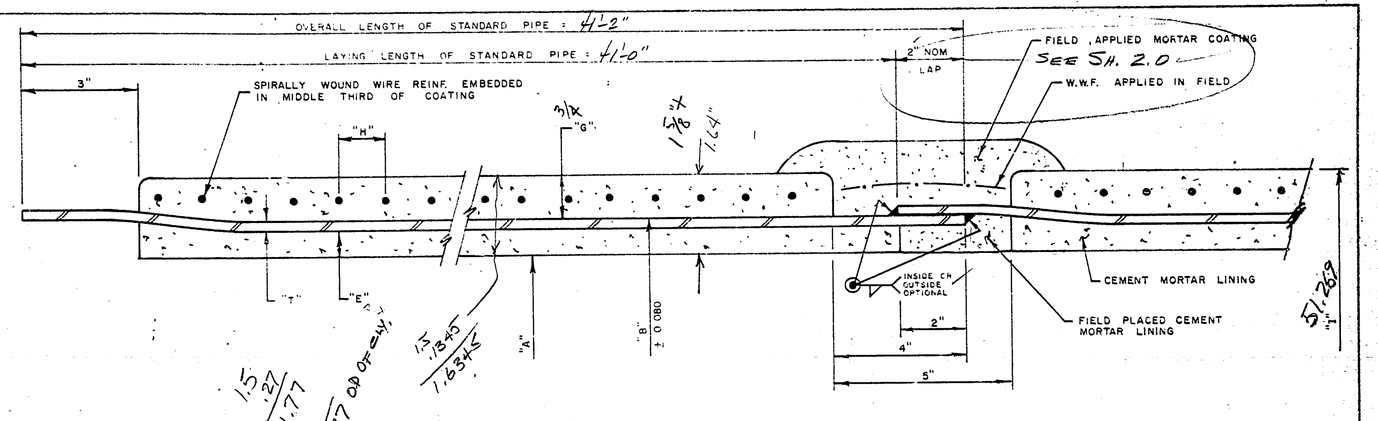

NOTE: BELL I.D. TO SPIGOT O.D.
TOLERANCE = .000" TO .120"

MANUFACTURING DATA																INSTALLATION DATA				
				STEEL CYLINDER					LINING & COATING											
NOMINAL PIPE I.D. "A" (IN)	MAX PIPE CLASS	BID ITEM	CLASS DESIGNATION	GAGE OR THICKNESS "T"	A_y / FT (SQ IN)	O.D. CYL "B" (IN)	PLANT TEST PRESSURE (PSI)	CYL WEIGHT (LB/FT)	WIRE REINF. Ø	WIRE SPACING "H" (IN)	WIRE WEIGHT (LB/FT)			NOMINAL LINING THICKNESS "E" (IN)	MIN COATING THICKNESS "G" (IN)	MAX PIPE O.D. "I" (IN)	MAX PULL PER JOINT (ANGLE)	MIN PULLED RADIUS USING 41 PIPE (FT)	OFFSET IN 41 FOR MAX. PULL (FT)	APPROX WEIGHT OF 41 PIPE (LBS)
48	260		48SC260	.1345 10GA	1.61	49.875	194	71.27	15GA	1.25	1.77			.75	.75	52.38	1°08'	2073	.81	12499

PIPE SPECIFICATION: AWWA C-20D
CEMENT SPECIFICATION: ASTM C150 TYPE II
MIN. STEEL YIELD = 42,000 P.S.I.
WELDING: SEE SHT. 3
PLASTIC COVERS REQ'D

SEE SHT. 2 FOR MARKING OF PIPE

.1345
.75

SYMBOL	REVISION	DATE	BY	APPV'D

Ameron PIPE PRODUCTS GROUP

RUSSIAN RIVER - COTATI INTERTIE PROJECT

DRAWN	KW	12-8-75
CHECKED		
APPV'D		

2265 4.0

60-4-102.311.4

2-CUT

1F-12

FLAG	ITEM NO	QUANTITY REQ'D	DESCRIPTION	MATERIAL SPECIFICATION
	1	9'-9.76"	49.875" O.D. x 10 GA. CYL.	
	2	1	48" BELL RING	

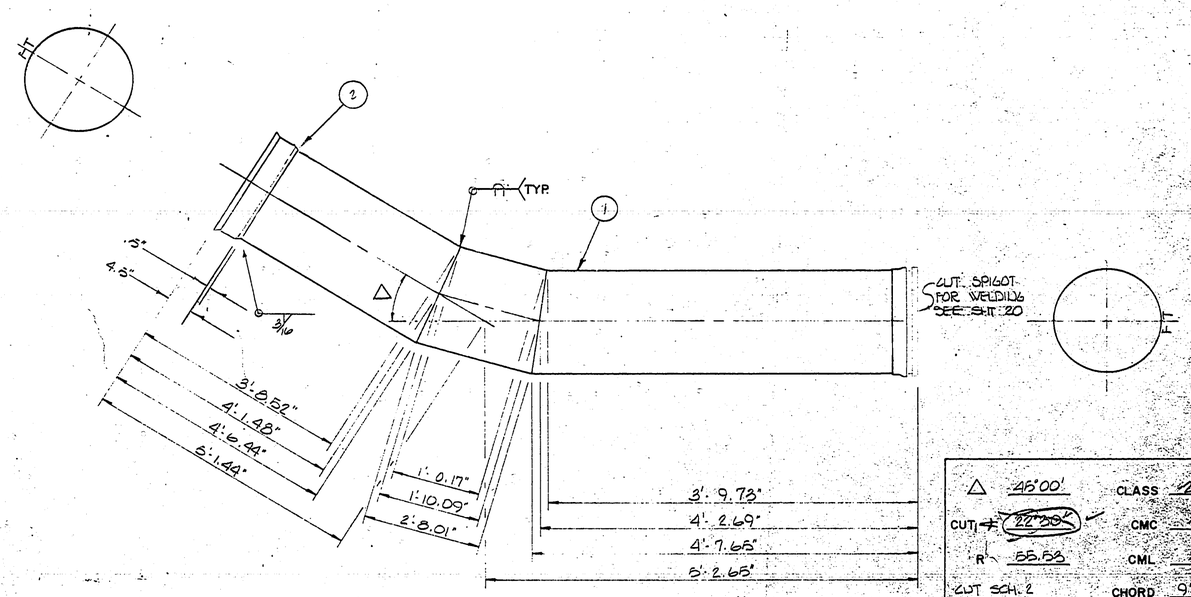

△	45°00'	CLASS	260
CUT	~~22.30~~	CMC	.75
R	55.53	CML	31.5
CUT SCH. 2		CHORD	9'-6.65"

Ameron PIPE PRODUCTS GROUP

RUSSIAN RIVER - COTATI INTERTIE PROJECT

CHANGE ORDERS	SYMBOL	REVISION	DATE	BY	APPV'D

UNLESS OTHERWISE SPECIFIED DIMENSIONS ARE IN INCHES

TOLERANCES

FRACT	.X	.XX	.XXX	ANGLE
±	±	±	±	±

DWG. SCALE

DRAWN	CLL	12/2/95	CONTRACT NO. 3
CHECKED			
APPV'D			2265 60-4-102.311.41 SHT 20

1F13

FLAG	ITEM NO	QUANTITY THIS DWG.	DESCRIPTION	MATERIAL SPECIFICATION
	1	41'-3.25"	49.875" O.D. x 10 GA. CYL.	
	2	10"	8" STD. WT. STEEL PIPE	
	3	1	8" - 150# SLIP-ON FLANGE	
	4	1	13.5" SQ. x 1/4" PL COLLAR ROLLED TO A 24.94" RADIUS	

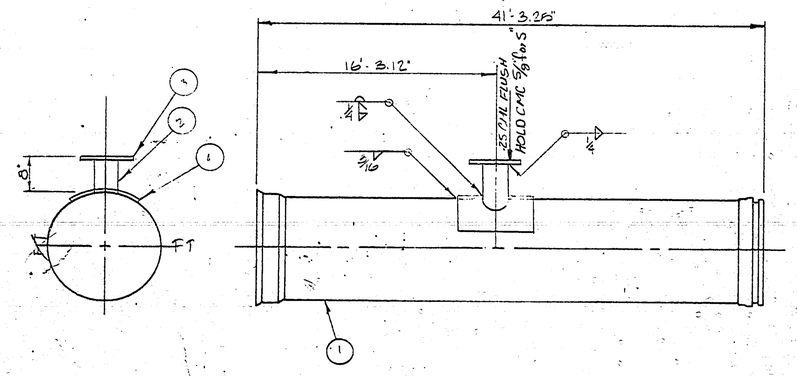

CLASS 260 D
CMC .75
CML .75
40
1L3

CHANGE ORDERS	SYMBOL	REVISION	DATE	BY	APPV'D

UNLESS OTHERWISE SPECIFIED DIMENSIONS ARE IN INCHES
TOLERANCES

FRACT.	.X	.XX	.XXX	ANGLE
±	±	±	±	±

DWG. SCALE

Ameron PIPE PRODUCTS GROUP

RUSSIAN RIVER - COTATI INTERTIE PROJECT

DRAWN CLL 12/2/75 CONTRACT NO. 3
CHECKED
APPV'D 2265 60-4-102.311.42 1F13.0

1F14

ITEM	QUANTITY REQ'D	DESCRIPTION	MATERIAL SPECIFICATIONS
1	205	49.875" O.D. x 10 GA. CYL	
2	6	18" x 12.50 O.A.L. SEE SHT. 151 CL "D" SKIRTED FLANGE	
3	5	30 1/4" O.D. x 5/16" PL COLLAR ROLLED TO A 24.94" RADIUS	

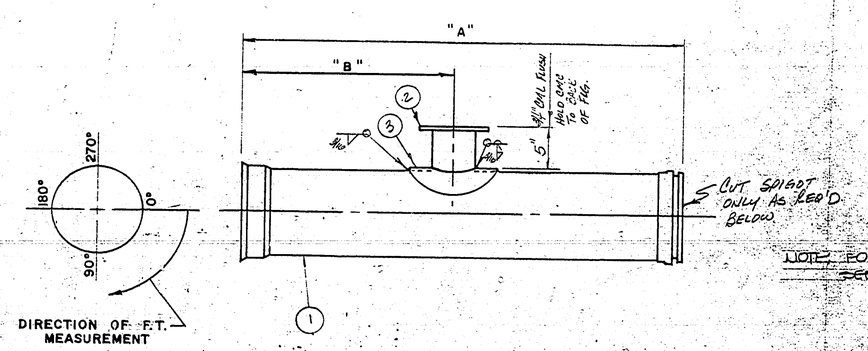

NOTE: FOR CUT SPIGOTS SEE SHT. 20

PC. NO.	CUT SECT.	CLASS	"A"	"B"	FT. LOCATION ANGULAR	FT. LOCATION CIRCUM.	REF. SHT.	CUT SPIGOT REQ'D
47	—	240' HD	41'-3.25"	28'-3.49"	270°	117.49"	163	
150'	—	240	41'-3.25"	3'-6.96	270	—	166	
197	—	220	41'-3.25"	8'-4.80	270	—	169	X
200	—	220	41'-3.25"	34'-1.32	270	—	169	X
234	—	200	41'-3.25"	33'-0.36"	270	—	1C71	

RUSSIAN RIVER-COTATI INTERTIE PROJECT

CLL 12/2/78 CONTRACT NO. 3

2245 60-4-102.311.43 SHT. 20

1F15

FLAG	ITEM NO.	QUANTITY THIS DWG.	DESCRIPTION	MATERIAL SPECIFICATION
	1	2	18" CL "D" BOUND FLG. SEE SHT. 1B3	

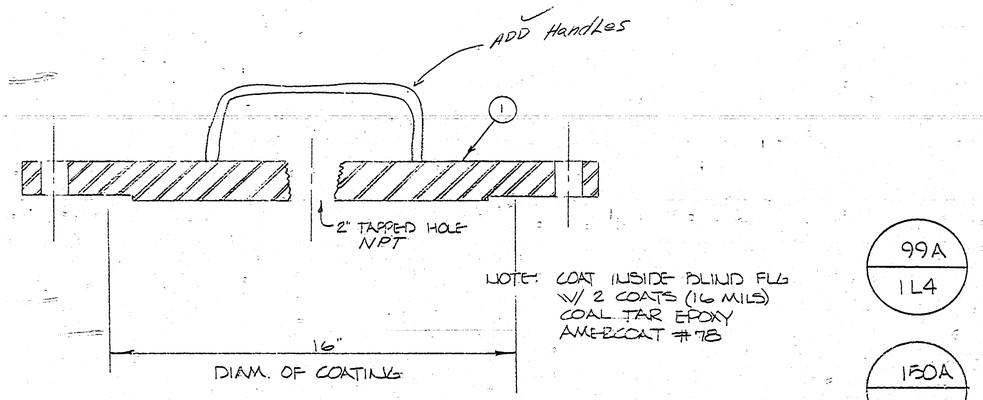

NOTE: COAT INSIDE BLIND FLG W/ 2 COATS (16 MILS) COAL TAR EPOXY AMERCOAT #78

99A / 1L4

150A / 1L6

CHANGE ORDERS	SYMBOL	REVISION	DATE	BY	APPV'D.

UNLESS OTHERWISE SPECIFIED DIMENSIONS ARE IN INCHES

TOLERANCES

FRACT.	.X	.XX	.XXX	ANGLE
±	±	±	±	±

DWG. SCALE

Ameron UTILITY PRODUCTS GROUP

RUSSIAN RIVER · COTATI INTERTIE PROJECT

DRAWN	CLL	12/9/76
CHECKED		
APPV'D.		

2265 60-4-102.311.44 F-15.0

1F15

FLAG	ITEM NO	QUANTITY THIS DWG.	DESCRIPTION	MATERIAL SPECIFICATION
	1	35'-00"	49.875" O.D. X 10 GA CYL.	
	2	1	48" M3516 SPIGOT	
	3	1	2" 3000# THREDOLET ON A 49.94" RUN	
	4	1	3/16" R x 6" SQ COLLAR ROLL TO 24.94" R.	ASTM A283 GRC

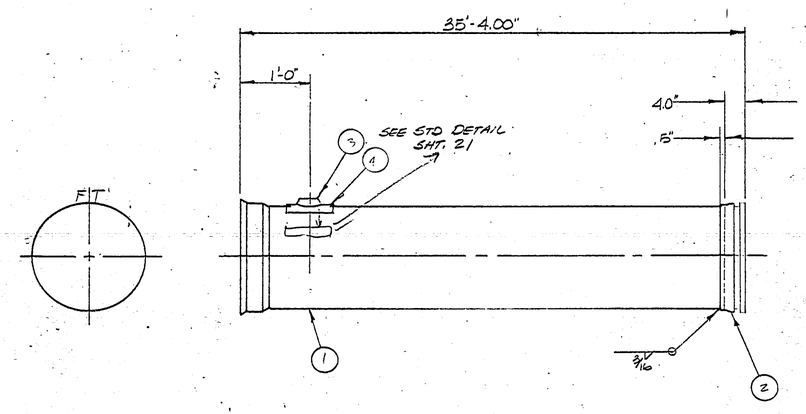

CLASS 260
CMC .75
CML .75
CUT SCH. 3

49
1L3

Ameron PIPE PRODUCTS GROUP

RUSSIAN RIVER - COTATI INTERTIE PROJECT

CHANGE ORDERS	SYMBOL	REVISION	DATE	BY	APPV'D

UNLESS OTHERWISE SPECIFIED DIMENSIONS ARE IN INCHES

TOLERANCES

FRACT	.X	.XX	.XXX	ANGLE
±	±	±	±	±

DWG SCALE

DRAWN	CLL	12/2/75	CONTRACT NO. 3
CHECKED			SHT. 1F16 OMITTED
APPV'D			2265 60-4-102.311.45 1F16.0

2-CUT

1F-17

FLAG	ITEM NO.	QUANTITY THIS DWG.	DESCRIPTION	MATERIAL SPECIFICATION
	1	25'-7.02"	49.875" O.D. X 10 GA. CYL.	
	2	1	48" M3516 SPIGOT	
	3	1	½" x 3000# THREADOLET	
	4	1	3/16" PL x 6" SQ COLLAR ROLL TO 24.94" R.	ASTM A283 GRC

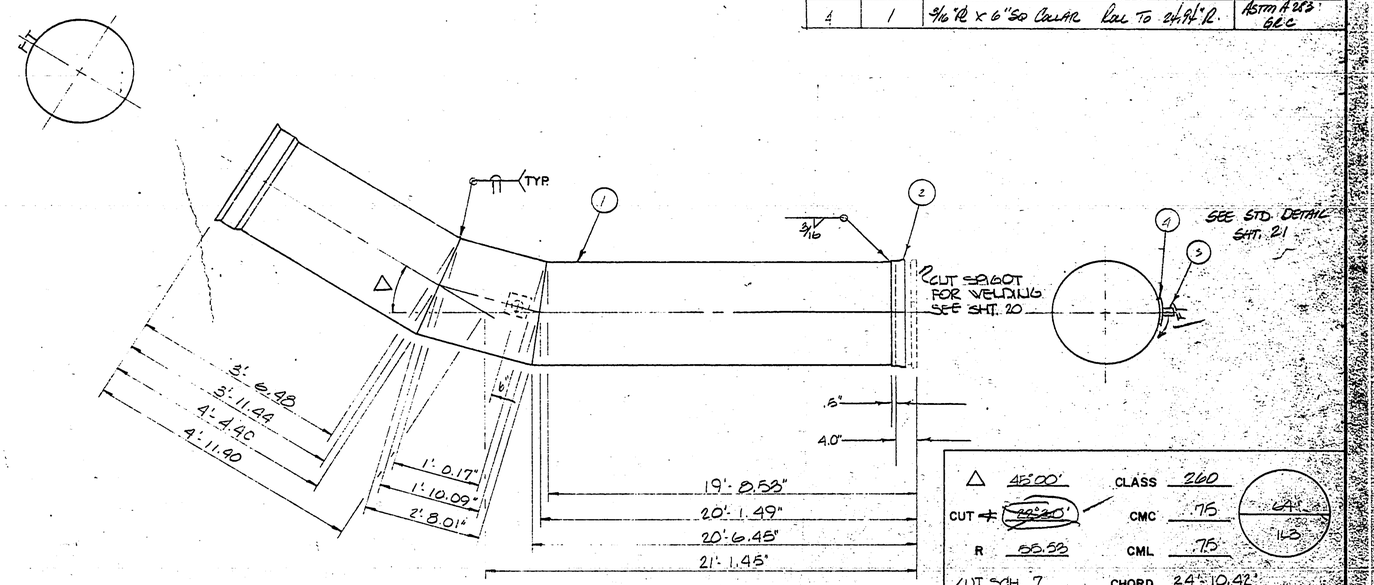

△	45°00'	CLASS	260
CUT ∠	~~22°30'~~	CMC	.75
R	55.53	CML	.75
CUT SCH. 7		CHORD	24'-10.42"

64'-1.3

Ameron PIPE PRODUCTS GROUP

RUSSIAN RIVER-COTATI INTERTIE PROJECT

CHANGE ORDERS	SYMBOL	REVISION	DATE	BY	APPV'D.

UNLESS OTHERWISE SPECIFIED DIMENSIONS ARE IN INCHES

TOLERANCES

FRACT	.X	XX	XXX	ANGLE
±	±	±	±	±

DWG. SCALE

DRAWN	CLL	12/2/75	CONTRACT NO. 3
CHECKED			
APPV'D.			

2265 60-4-102.311.46 1F17.0

2-CUT

1F10

FLAG	ITEM NO.	QUANTITY REQUIRED	DESCRIPTION	MATERIAL SPECIFICATION
	1	15'-8.23"	49.875" x 1' 10 GA. CYL.	
	2	1	48" POELL RING	

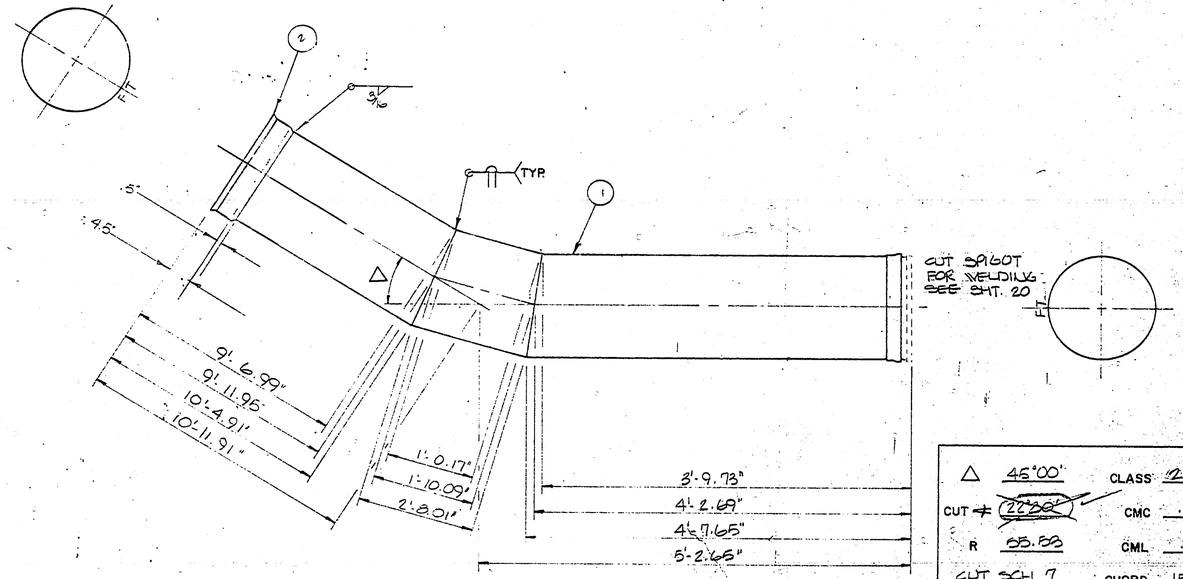

△	45°00'	CLASS	260D
CUT ∠	~~22°30'~~	CMC	.75
R	55.50	CML	.75
CUT SCH	7	CHORD	15'-1.69"

65 / 31.3

Ameron PIPE PRODUCTS GROUP

RUSSIAN RIVER - COTATI INTERTIE PROJECT

CHANGE ORDERS	SYMBOL	REVISION	DATE	BY	APPV'D

UNLESS OTHERWISE SPECIFIED DIMENSIONS ARE IN INCHES

TOLERANCES

FRACT	.X	.XX	.XXX	ANGLE
±	±	±	±	±

DWG. SCALE

DRAWN	CLL	12/2/75	CONTRACT NO. 3
CHECKED			
APPV'D			2265 60-4-102.311.47 1F10.0

1F-19

FLAG	ITEM NO	QUANTITY THIS DWG.	DESCRIPTION	MATERIAL SPECIFICATION
	1	41'-3.25"	49.875" O.D x 10 GA. CYL.	
	2	10"	8" STD. WT. STEEL PIPE	
	3	1	8" - 150# SLIP-ON FLANGE	
	4	1	13.5" SQ x 1/4" PL COLLAR ROLLED TO A 24.94" RADIUS	

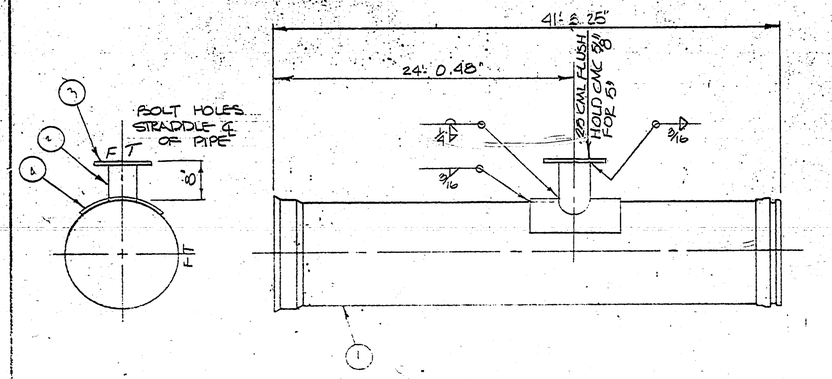

CLASS 260
CMC .75
CML .75

73
1L4

UNLESS OTHERWISE SPECIFIED DIMENSIONS ARE IN INCHES
TOLERANCES
FRACT X .XX .XXX ANGLE

RUSSIAN RIVER-COTATI INTERTIE PROJECT

DRAWN CLL 12/3/75 CONTRACT NO. 3

2266 60-4-102.311.48 1F-19.0

1F19A

FLAG	ITEM NO.	QUANTITY THIS DWG.	DESCRIPTION	MATERIAL SPECIFICATION
	1	1	8" x 90° STD WT. ELBOW L.R.	
	2	2	8" 150# SLIP-ON FLANGE F.F.	

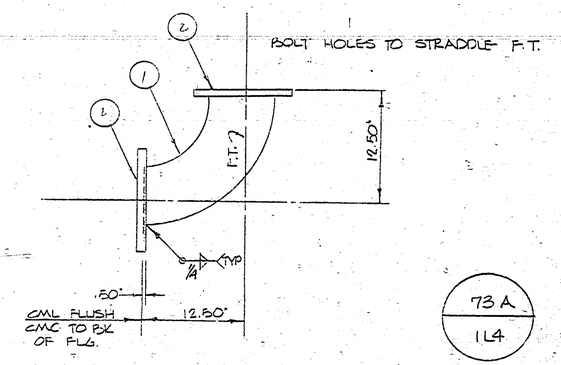

73 A
1L4

C.M.L. = .25
CMC = .50

CHANGE ORDERS	SYMBOL	REVISION	DATE	BY	APPV'D.

UNLESS OTHERWISE SPECIFIED DIMENSIONS ARE IN INCHES

TOLERANCES

FRACT.	.X	.XX	.XXX	ANGLE
±	±	±	±	±

DWG. SCALE

Ameron UTILITY PRODUCTS GROUP

RUSSIAN RIVER - COTATI INTERTIE PROJECT

DRAWN	CLL	12/8/75	CONTRACT NO. 3
CHECKED			
APPV'D.			2265 60-4-102.311.49 19A.0

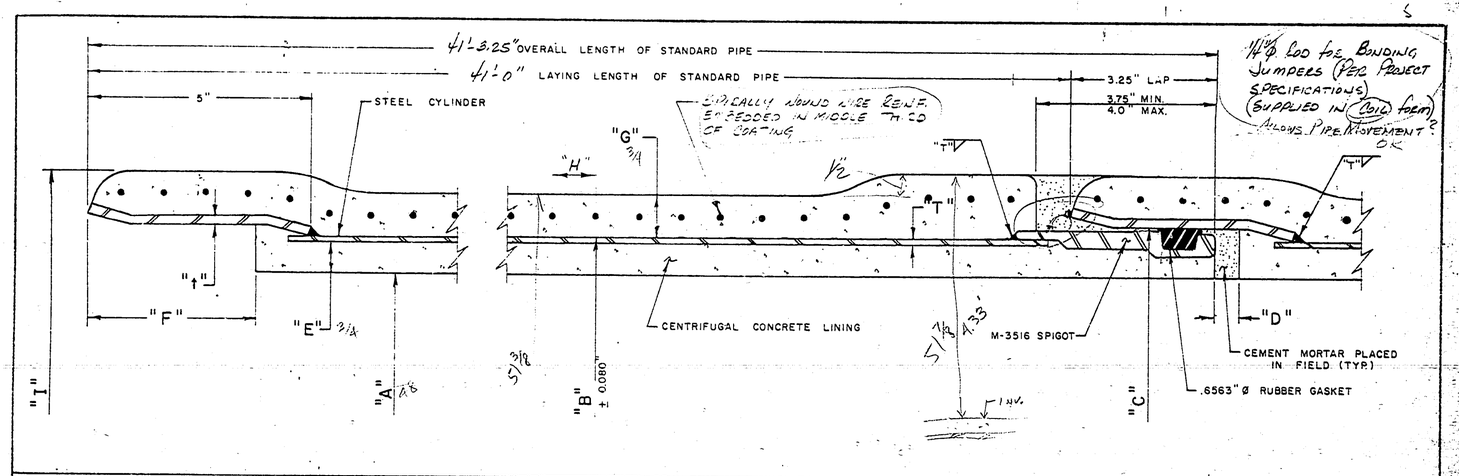

MANUFACTURING DATA																			INSTALLATION DATA					
				STEEL CYLINDER					REINFORCING WIRE															
INSIDE DIAM OF PIPE A (IN)	MAX. PIPE CLASS	BID ITEM	CLASS DESIGNATION	GAGE OR THICKNESS T (NO. OR IN)	A_y /FT (SQ. IN.)	OUTSIDE DIAMETER B (IN.)	PLANT TEST PRESSURE (PSI)	CYL WEIGHT (LB/FT)	WIRE DIAM. (IN)		SPACING C TO C H (IN)		WIRE WT. (PER FT)	NOMINAL JOINT DIAMETER C (IN)	BELL RING THICKNESS t (IN)	DEPTH OF SOCKET F (IN)	NOMINAL LINING THICKNESS E (IN)	MIN COATING THICKNESS G (IN)	OUTSIDE DIAMETER OF PIPE I (IN)	INSIDE JOINT SPACE D (IN)	MAX PULL PER JOINT (ANGLE)	MIN. PULLED RADIUS USING 41' PIPE (FEET)	OFFSET IN 41' FOR MAXIMUM PULL (FEET)	APPROX WEIGHT OF 41' PIPE (LB)
48	420		48SC420	1.2242 4GA	2.69	49.875	324	118.87	15GA		1.25		1.77	50.375	5/16	3.75	.75	.75	52.50	.50	1°08'	2073	.81	15123
48	360		48SC360	3/16	2.25	49.875	270	99.50	15GA		1.25		1.77	50.375	1/4	3.75	.75	.75	52.38	.50	1°08'	2073	.81	14303
48	320		48SC320	1.644 8GA	1.97	49.875	237	87.16	15GA		1.25		1.77	50.375	1/4	3.75	.75	.75	52.38	.50	1°08'	2073	.81	13811
48	260		48SC260	.1345 10GA	1.61	49.875	194	71.27	15GA		1.25		1.77	50.375	1/4	3.75	.75	.75	52.38	.50	1°08'	2073	.81	13155

PIPE SPEC: AWWA C-20D
CEMENT SPEC: ASTM C150 TYPE II
MIN STEEL YIELD FOR CYLINDER = 42,000 PSI, MIN STEEL YIELD FOR JOINT BANDS = 30,000 PSI.
WELDING: SEE SHT. 3 FOR CYLINDER WELDING,
JOINT BAND ATTACHMENT: INNER SHIELD
PLASTIC COVERS REQ'D
PAINT EXPOSED PORTIONS OF JOINT BANDS W/ 1-COAT AMERCOAT #38 NEA? SW: OK

SEE SHT. 2 FOR MARKING OF PIPE

SYMBOL	REVISION	DATE	BY	APPV'D

Amercoat

RUSSIAN RIVER - COTATI INTERTIE PROJECT

DRAWN	KW	12-8-75
CHECKED		
APPV'D		

2265 S.O

60-4-102.311.5

1-CUT

1F20

FLAG	ITEM NO.	QUANTITY (IN DIA.)	DESCRIPTION	MATERIAL SPECIFICATION
	1	27'-11.57"	49.875" x 10 GA. CYL.	
	2	1	48" M 3516 SPIGOT	
	3	1	18" x 12.50" O.A.L. CL "D" SKIRT-D FLG SEE SHT. 1B1	
	4	1	38.25" O.D. x 3/16" R COLLAR ROLL TO 24.94" R	
	5	1	13" Sq x 3/16" R COLLAR ROLL TO 24.94" R.	
	6	1	8" x 150# SLIP-ON FLG. F.F.	
	7	9"	8" STD WT. STEEL PIPE	

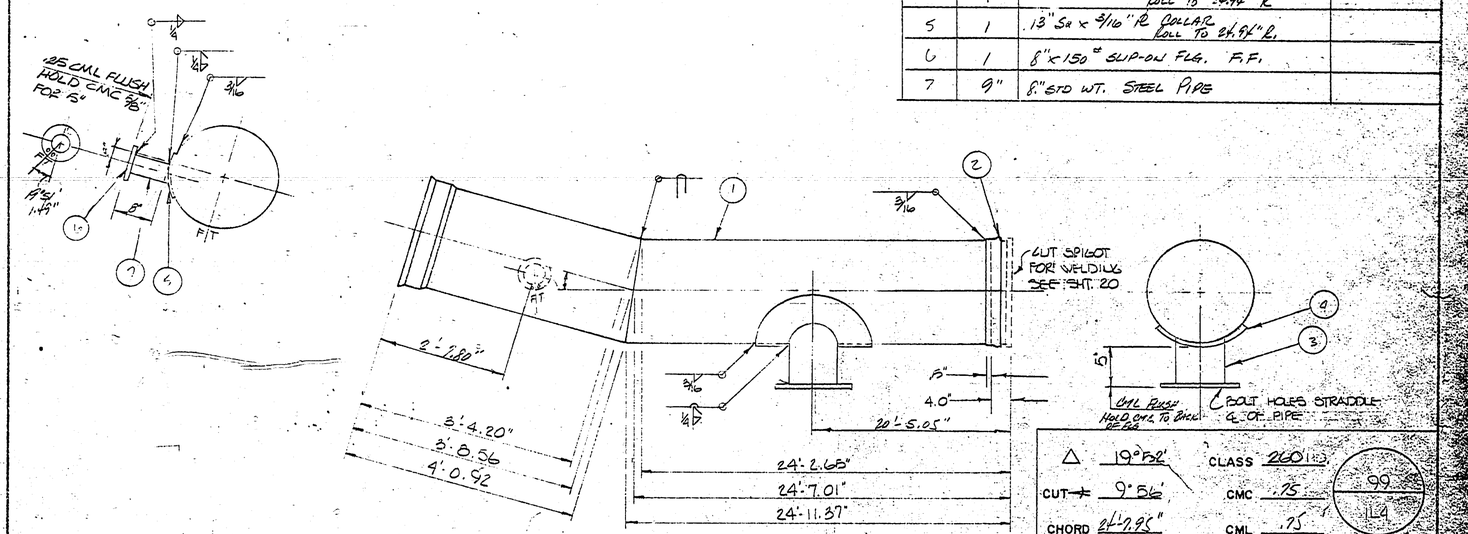

△ 19°52'
CUT ⊥ 9°56'
CHORD 24'-7.95"
CUT SCH. 5

CLASS 260 I.D.
CMC .75
CML .75

99
1L4

Ameron PIPE PRODUCTS GROUP

RUSSIAN RIVER COTATI INTERTIE PROJECT

CHANGE ORDERS	SYMBOL	REVISION	DATE	BY	APPV'D.

UNLESS OTHERWISE SPECIFIED DIMENSIONS ARE IN INCHES
TOLERANCES
FRACT. ± .X ± .XX ± .XXX ± ANGLE ±
DWG. SCALE

DRAWN	CLL	12/3/75	CONTRACT NO. 3
CHECKED			
APPV'D.		2265	60-4-102.311.50

1F20.0

1-CUT

1F21

FLAG	ITEM NO	QUANTITY THIS DWG	DESCRIPTION	MATERIAL SPECIFICATION
	1	19'-11.29"	49.875" O.D. x 106A CYL	
	2	1	48" SPIGOT RING	

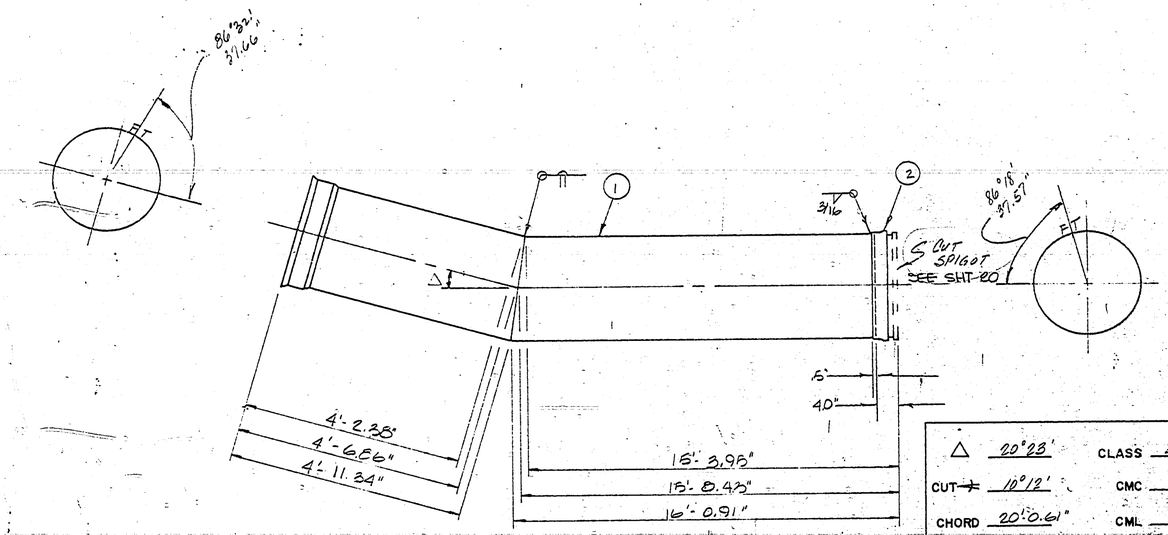

Δ	20°23'	CLASS	200
CUT →	10°12'	CMC	.75
CHORD	20'-0.61"	CML	.75

100 / 14

CUT SCH 8

Ameron PIPE PRODUCTS GROUP

RUSSIAN RIVER CONTRACT #8

CHANGE ORDERS	SYMBOL	REVISION	DATE	BY	APPV'D.

UNLESS OTHERWISE SPECIFIED DIMENSIONS ARE IN INCHES

TOLERANCES

FRACT.	.X	.XX	.XXX	ANGLE
±	±	±	±	±

DWG. SCALE

DRAWN	KW	12-6-75
CHECKED		
APPV'D.		

2265

60-4-102.311.51

1F21.0

1-CUT

1F22

FLAG	ITEM NO	QUANTITY THIS DWG	DESCRIPTION	MATERIAL SPECIFICATION
	1	41'-3.25"	49.875" O.D. x 10GA CYL.	
	2	1	2" x 3000# THREADOLET	
	3	1	3/16" R x 6" SQ COLLAR ROLL TO 2 1/4" R	ASTM A283 GR.C

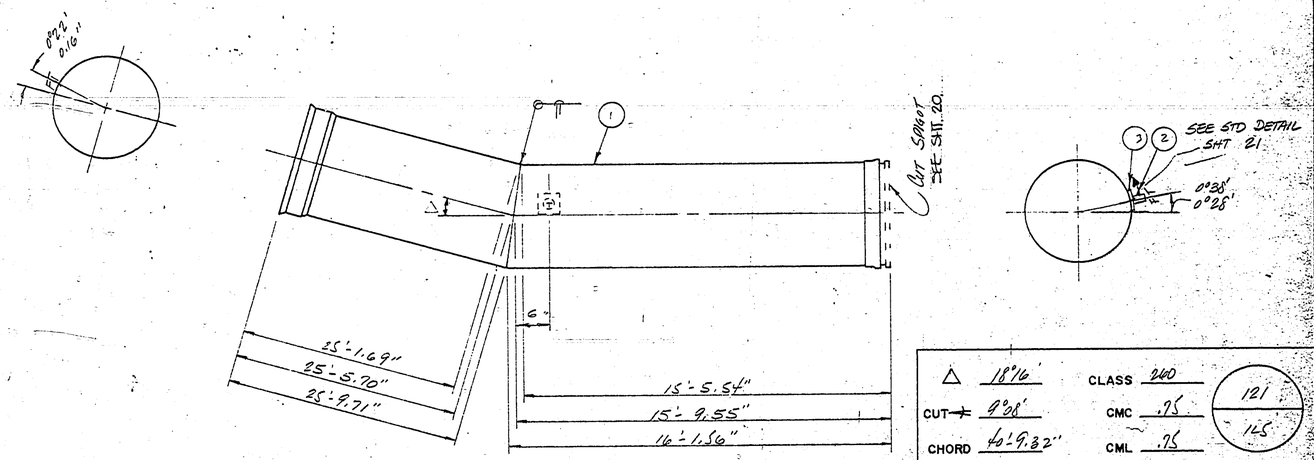

△	18°16'	CLASS	260
CUT ⊥	9°08'	CMC	.75
CHORD	40'-9.32"	CML	.75

121
125

Ameron PIPE PRODUCTS GROUP

RUSSIAN RIVER - CONTRACT #3

CHANGE ORDERS	SYMBOL	REVISION	DATE	BY	APPV'D.

UNLESS OTHERWISE SPECIFIED DIMENSIONS ARE IN INCHES

TOLERANCES

FRACT.	.X	.XX	.XXX	ANGLE
±	±	±	±	±

DWG. SCALE

DRAWN	KW	12-4-75
CHECKED		
APPV'D.		

2265

60-4-102.311.52 1F-220

1F23

FLAT	ITEM NO.	QUANTITY REQ'D	DESCRIPTION	MATERIAL SPECIFICATION
	1	41'-3.25"	49.875" O.D. x 10GA. CYL.	

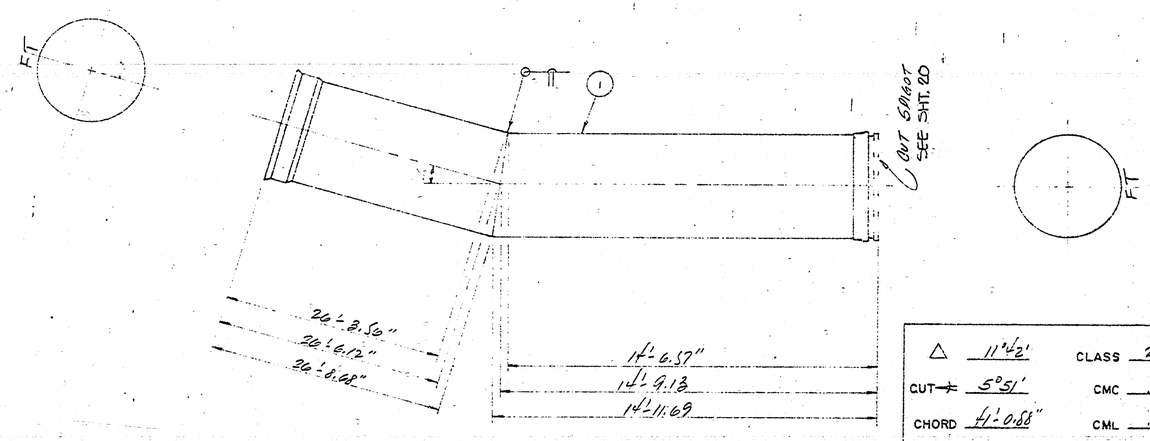

△	11°42'	CLASS	260
CUT ⊥	5°51'	CMC	.75
CHORD	41'-0.88"	CML	.75

123 / 125

Ameron PIPE PRODUCTS GROUP

RUSSIAN RIVER - CONTRACT #3

CHANGE ORDERS	SYMBOL	REVISION	DATE	BY	APPV'D.

UNLESS OTHERWISE SPECIFIED DIMENSIONS ARE IN INCHES

TOLERANCES

FRACT.	X	XX	XXX	ANGLE
±	±	±	±	±

DWG. SCALE

DRAWN LW 12-4-75

CHECKED

APPV'D.

2265

60-4-102.311.53 F23.0

1-CUT

IF 24

FLAG	ITEM NO	QUANTITY THIS DWG.	DESCRIPTION	MATERIAL SPECIFICATION
	1	41'-3.25"	49.875" O.D. x 10GA. CYL.	
	2	1	2" x 3000# THREADOLET	
	3	1	3/16" R x 6" SQ COLLAR ROLL TO 24.94" R.	ASTM A 283 GRC

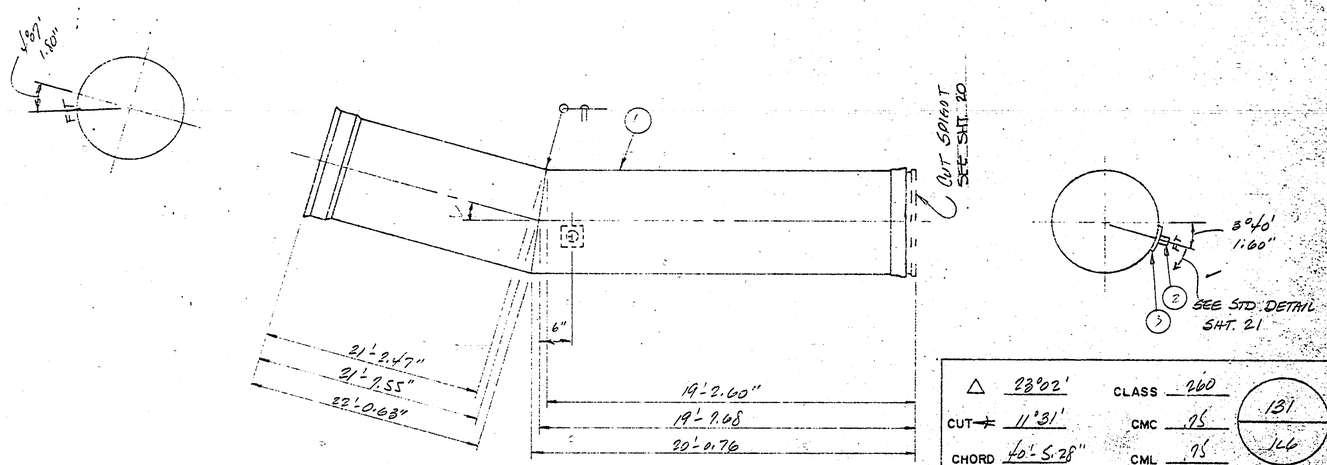

△	23°02'	CLASS	260
CUT ⊥	11°31'	CMC	.75
CHORD	40'-5.28"	CML	.75

131
146

Ameron PIPE PRODUCTS GROUP

RUSSIAN RIVER - CONTRACT #3

UNLESS OTHERWISE SPECIFIED DIMENSIONS ARE IN INCHES

TOLERANCES

FRACT	.X	.XX	.XXX	ANGLE
±	±	±	±	±

DWG. SCALE

DRAWN	KW	12-4-75
CHECKED		
APPV'D.		

2265

CHANGE ORDERS	SYMBOL	REVISION	DATE	BY	APPV'D.

60-4-102.311.54 F24.0

1-CUT

1F25

FLAG	ITEM NO.	QUANTITY REQ'D.	DESCRIPTION	MATERIAL SPECIFICATION
	1	41'-2.25"	49.875" O.D. x 10 GA. C&L.	
	2	1	2" x 3000# THREADOLET	
	3	1	3/16" R x 6" SQ COLLAR ROLL TO 24.94" R.	ASTM A 283 GRC

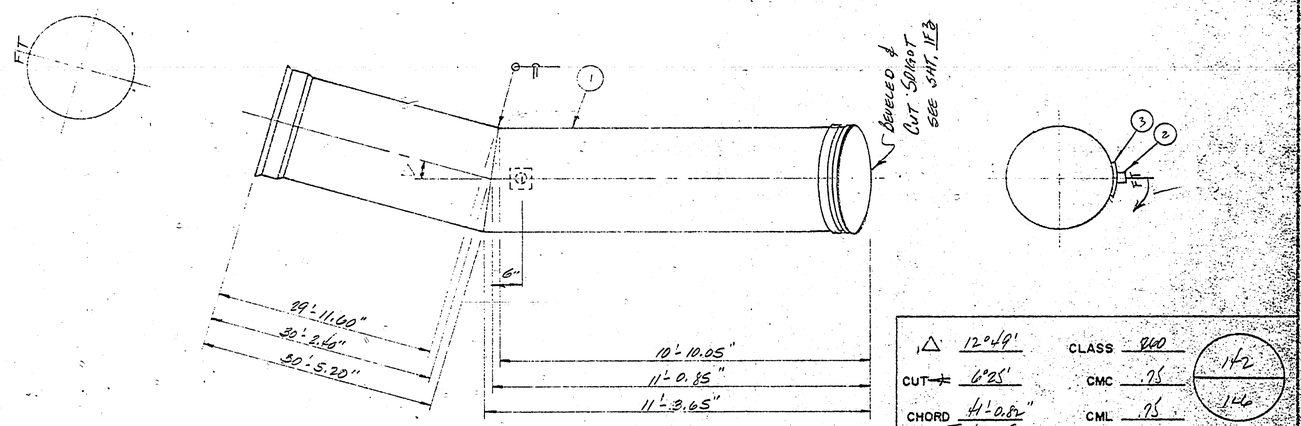

△	12°49'	CLASS	800
CUT ⊥	6°25'	CMC	.75
CHORD	41'-0.82" TO LONG SIDE	CML	.75

142 / 146

Ameron PIPE PRODUCTS GROUP

RUSSIAN RIVER - CONTRACT #3

CHANGE ORDERS	SYMBOL	REVISION	DATE	BY	APPV'D.

UNLESS OTHERWISE SPECIFIED DIMENSIONS ARE IN INCHES

TOLERANCES

FRACT	.X	.XX	.XXX	ANGLE
±	±	±	±	±

DWG. SCALE

DRAWN	KW	12-4-75
CHECKED		
APPV'D.		

2265

60-4-102.311.55

1F250

1F26

1	41'-3.25"	49.875" O.D. x 10GA. CYL.	

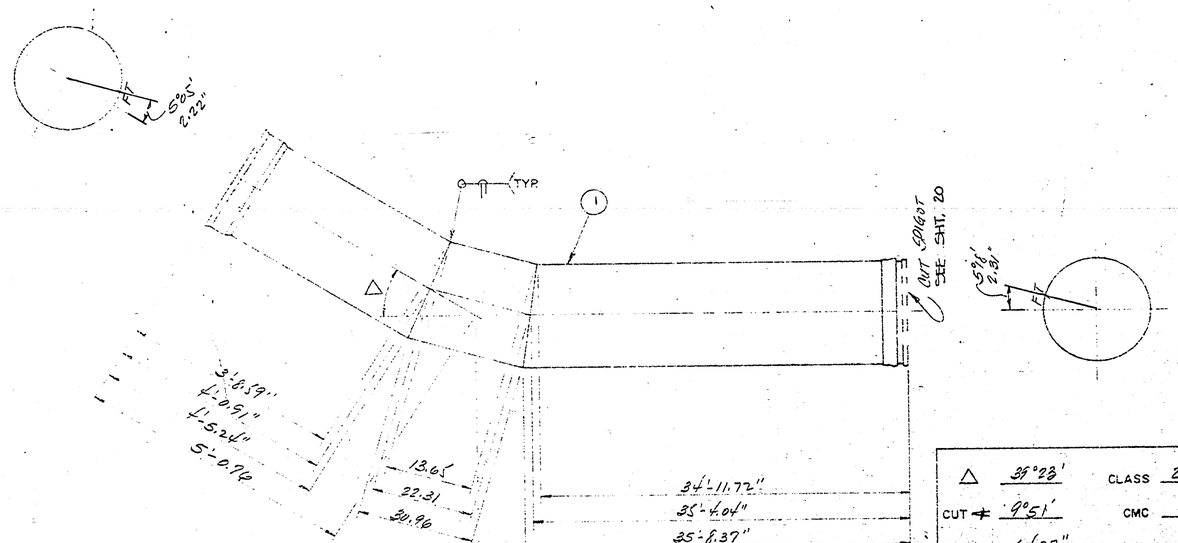

△	39°23'	CLASS	260
CUT ∢	9°51'	CMC	.75
R	64.27"	CML	.75
		CHORD	40'-4.39"

153
147

Ameron FIRE PRODUCTS GROUP

RUSSIAN RIVER - CONTRACT #3

UNLESS OTHERWISE SPECIFIED DIMENSIONS ARE IN INCHES

TOLERANCES

FRACT	.X	.XX	.XXX	ANGLE
±	±	±	±	±

DRAWN	KW	12-4-75
CHECKED		
APPV'D		

2265

60-4-102.311.56 1F26.0

		REVISION	DATE	BY	APPV'D

DWG SCALE

2-CUT

1F27

ITEM NO.	QUANTITY	DESCRIPTION	MATERIAL SPECIFICATION
1	29'-11.27"	49.875" O.D. X 10GA. CYL	
2	1	48" SPIGOT RING	

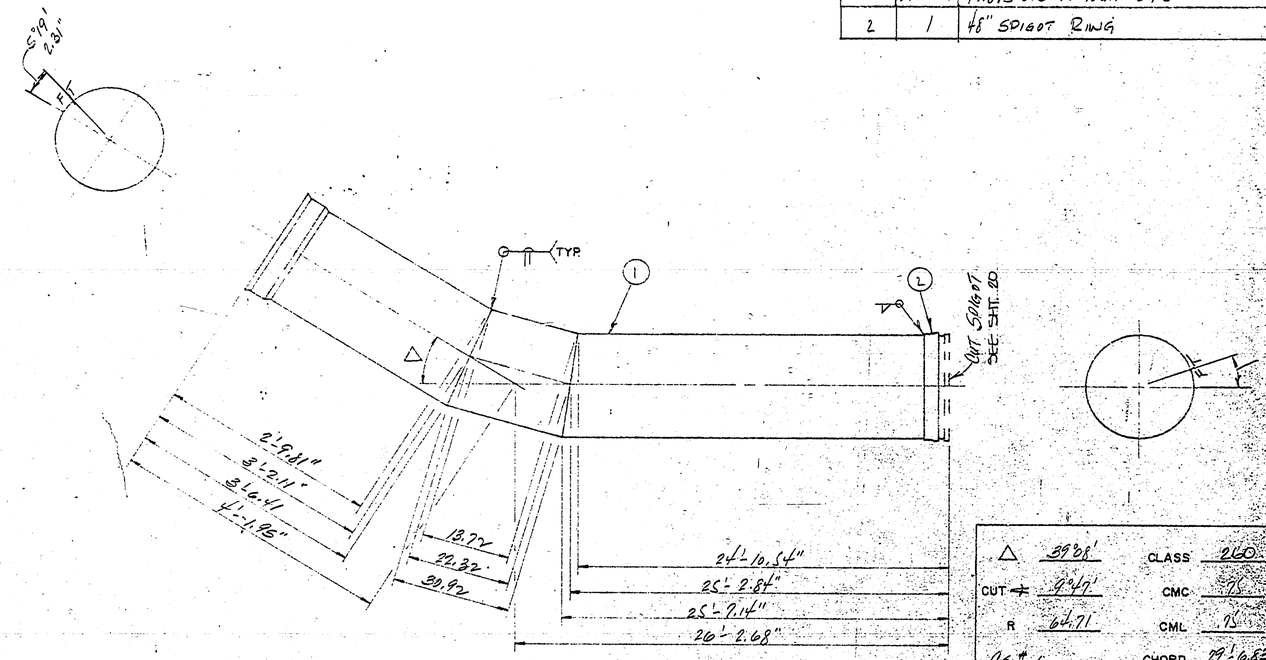

△	39°08'	CLASS	260
CUT ⌀	9°47'	CMC	.75
R	64.71	CML	.75
CS # 6		CHORD	29'-6.83"

17.2
14.7

Ameron PIPE PRODUCTS GROUP

RUSSIAN RIVER - CONTRACT # 3

UNLESS OTHERWISE SPECIFIED DIMENSIONS ARE IN INCHES

TOLERANCES

FRACT.	.X	.XX	.XXX	ANGLE
±	±	±	±	±

DRAWN KW 12-4-75

CHECKED

APPV'D.

2265

60-4-102.311.57 F270

CHANGE ORDERS	SYMBOL	REVISION	DATE	BY	APPV'D.

DWG. SCALE

2-CUT

IF-28

FLAG	ITEM NO	QUANTITY THIS DWG.	DESCRIPTION	MATERIAL SPECIFICATION
	1	29'-11.26	49.875" O.D. x 10GA. CYL	
	2	1	48" SPIGOT RING	

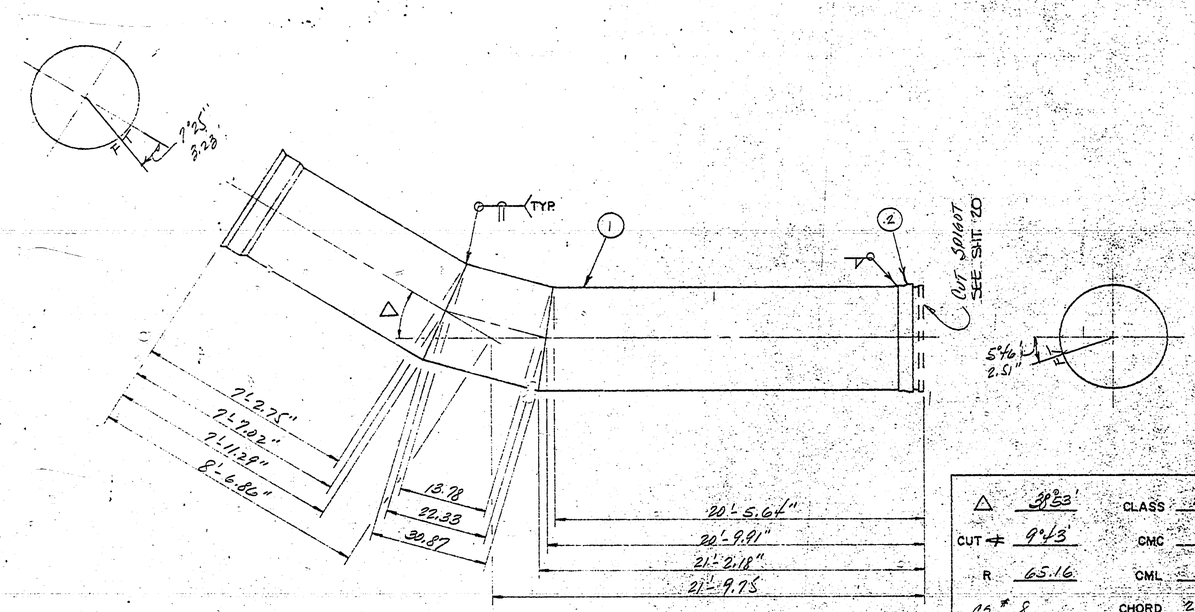

△	38°53'	CLASS	260
CUT ∢	9°43'	CMC	.75
R	65.16	CML	.75
CS # 8		CHORD	28'-11.86"

173
148

Ameron PIPE PRODUCTS GROUP

Russian River - Contract #3

UNLESS OTHERWISE SPECIFIED DIMENSIONS ARE IN INCHES

TOLERANCES

FRACT.	.X	.XX	.XXX	ANGLE
±	±	±	±	±

DRAWN KW 12-4-75

CHECKED

APPV'D.

DWG. SCALE

2265

IF28.0

60-4-102.311.58

CHANGE ORDERS	SYMBOL	REVISION	DATE	BY	APPV'D.

FLAG	ITEM NO	QUANTITY THIS DWG	DESCRIPTION	MATERIAL SPECIFICATION
	1	41'-3.25"	49.875" O.D. x 10GA. CYL.	
	2	1	12" x 150# SLIP-ON FLG. F.F.	
	3	10"±	12" SCH. 20 STEEL PIPE	
	4	1	24" SQ x 3/16" R COLLAR ROLL TO 24.94" R.	

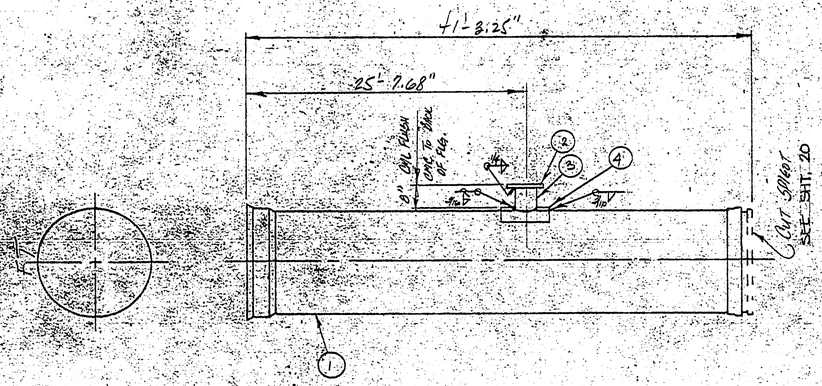

CLASS 260
CMC .75
CML .75
.31" for 12"
.174
.148

Ameron PIPE PRODUCTS GROUP

RUSSIAN RIVER - CONTRACT #3

CHANGE ORDERS	SYMBOL	REVISION	DATE	BY	APPV'D

UNLESS OTHERWISE SPECIFIED DIMENSIONS ARE IN INCHES

TOLERANCES

FRACT.	X	XX	XXX	ANGLE
±	±	±	±	±

DWG. SCALE

DRAWN	KW	12-5-75
CHECKED		
APPV'D		

2265

60-4-102.311.59

F29.0

1000-1000 (8-70)

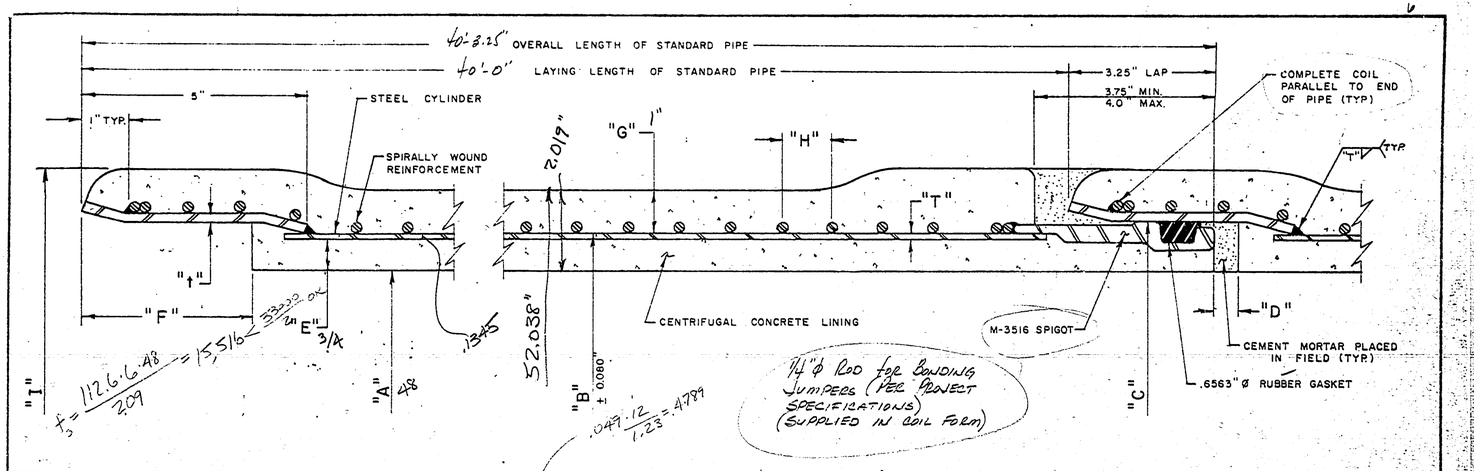

MANUFACTURING DATA																			INSTALLATION DATA					
				STEEL CYLINDER					REINFORCING ROD															
INSIDE DIAM OF PIPE A (IN)	MAX. PIPE CLASS	CLASS DESIGNATION	TOTAL A_T /FT (SQ IN.)	GAGE OR THICKNESS T (NO OR IN)	A_y /FT. (SQ IN.)	OUTSIDE DIAMETER B (IN.)	PLANT TEST PRESSURE (PSI)	CYL WEIGHT (LB/FT)	ROD DIAM. (IN)	A_s /FT (SQ/IN)	SPACING C TO C H (IN)	COILS PER FOOT (NO)	ROD WT. (PER FT)	NOMINAL JOINT DIAMETER C (IN)	BELL RING THICKNESS t (IN)	DEPTH OF SOCKET F (IN)	NOMINAL LINING THICKNESS E (IN)	MIN. COATING THICKNESS G (IN)	MAX OUTSIDE DIAMETER OF PIPE I (IN)	INSIDE JOINT SPACE D (IN)	MAX PULL PER JOINT (ANGLE)	MIN. PULLED RADIUS USING 40 PIPE (FEET)	OFFSET IN 40 FOR MAXIMUM PULL (FEET)	APPROX WEIGHT OF 40 PIPE (LB)
48	260	48PT260	2.09	10GA .1345	1.61	49.875	152	71.27	1/4	.48	1.23	9.78	21.41	50.375	1/4	3.75	.75	1.00	52.38	.50	1°08'	2016	.79	13600
	112.62 PSI		2.0929		1.614					.4789														
							22.0070 < 27 OK																	

SID SAYS OK

PIPE SPEC: AWWA C 303
CEMENT SPEC: ASTM C150 TYPE II
MIN STEEL YIELD FOR CYLINDERS = 33,000 PSI
MIN STEEL YIELD FOR JOINT BANDS = 30,000 PSI
WELDING: SEE SHT. 5
PLASTIC COVERS REQ'D
PAINT EXPOSED PORTIONS OF JOINT BANDS w/ 1-COAT AMERCOAT #38

SEE SHT. 2 FOR MARKING OF PIPE

SYMBOL	REVISION	DATE	BY	APPV'D.

Ameron PIPE PRODUCTS GROUP

RUSSIAN RIVER - COTATI INTERTIE PROJECT

DRAWN	KW	12-8-75
CHECKED		
APPV'D.		

2265 6.0

60-4-102.311.6

2-CUT

1F-30

FLAG	ITEM NO.	QUANTITY THIS DWG.	DESCRIPTION	MATERIAL SPECIFICATION
	1	41'-3.25"	49.875" O.D. x 10GA. CYL.	
	2	1	2" x 3000# THREADOLET	
	3	1	3/16" PL x 6" SQ COLLAR ROLL TO 24.94" R.	ASTM A 283 GRC

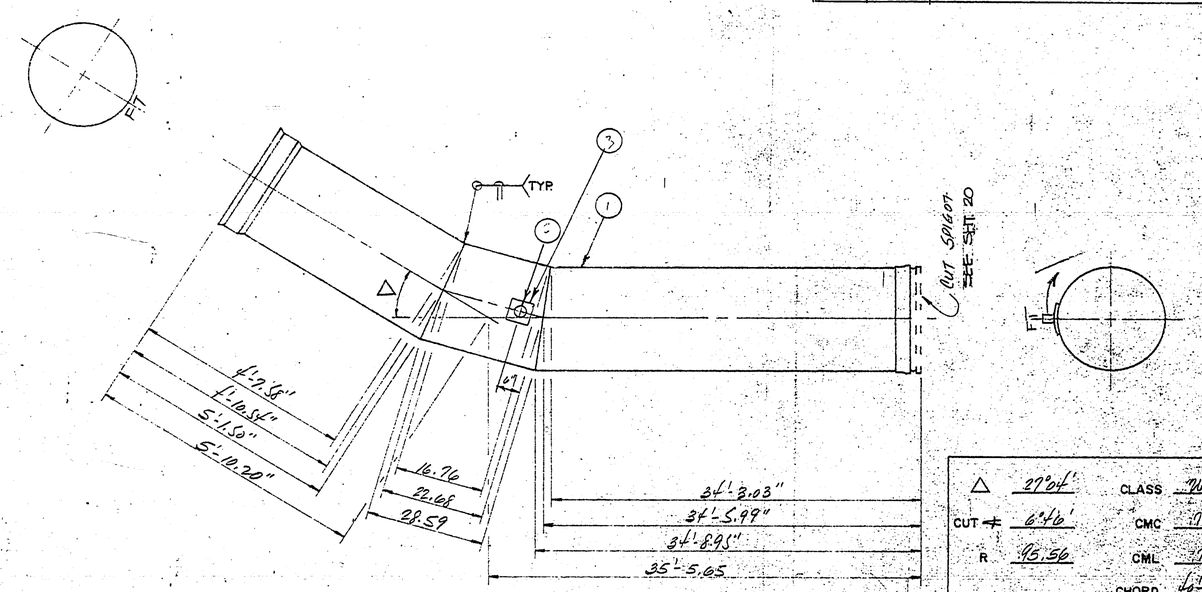

△	27°04'	CLASS	260
CUT ∠	6°46'	CMC	.75
R	95.56	CML	.75
		CHORD	40'-9.21"

$185
148

Ameron PIPE PRODUCTS GROUP

Russian River - Contract #3

CHANGE ORDERS	SYMBOL	REVISION	DATE	BY	APPV'D.

UNLESS OTHERWISE SPECIFIED DIMENSIONS ARE IN INCHES

TOLERANCES

FRACT.	X	XX	XXX	ANGLE
±	±	±	±	±

DWG. SCALE

DRAWN	KW	12-4-75
CHECKED		
APPV'D.		

2265

60-4-102.311.60

1F-30

1F31

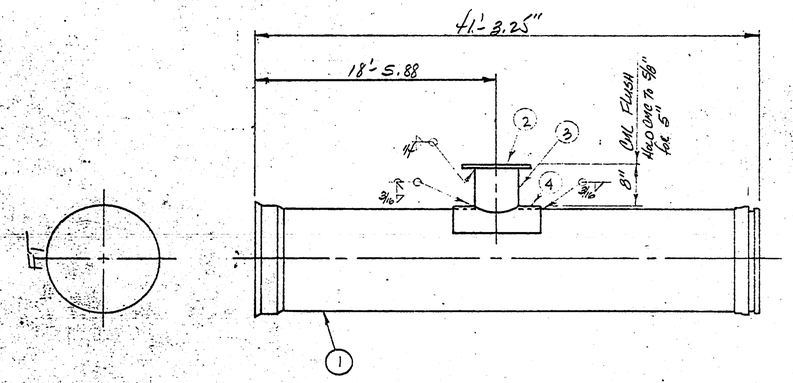

FLAG	ITEM NO.	QUANTITY THIS DWG	DESCRIPTION	MATERIAL SPECIFICATION
	1	41'-3.25"	49.875" O.D. x 10GA. CYL.	
	2	1	8" x 150# SLIP-ON FLG. F.F.	
	3	10"	8" SCH. 20 STEEL PIPE	
	4	1	135SQ x 3/16" R COLLAR, ROLL TO 24.94" R	

CLASS 260
CMC .75
CML .75
.25" for 8"

.190
.128

Ameron PIPE PRODUCTS GROUP

Russian River - Contract #3

CHANGE ORDERS	SYMBOL	REVISION	DATE	BY	APPV'D

UNLESS OTHERWISE SPECIFIED DIMENSIONS ARE IN INCHES

TOLERANCES

FRACT.	X	XX	XXX	ANGLE
±	±	±	±	±

DWG. SCALE

DRAWN RW 12-5-75
CHECKED
APPV'D.

2265

60-4-102.311.61 1F31.0

I-CUT

1F32

FLAG	ITEM NO	QUANTITY THIS DWG	DESCRIPTION	MATERIAL SPECIFICATION
	1	41'-3.25"	49.875" O.D. X 10GA. CYL.	

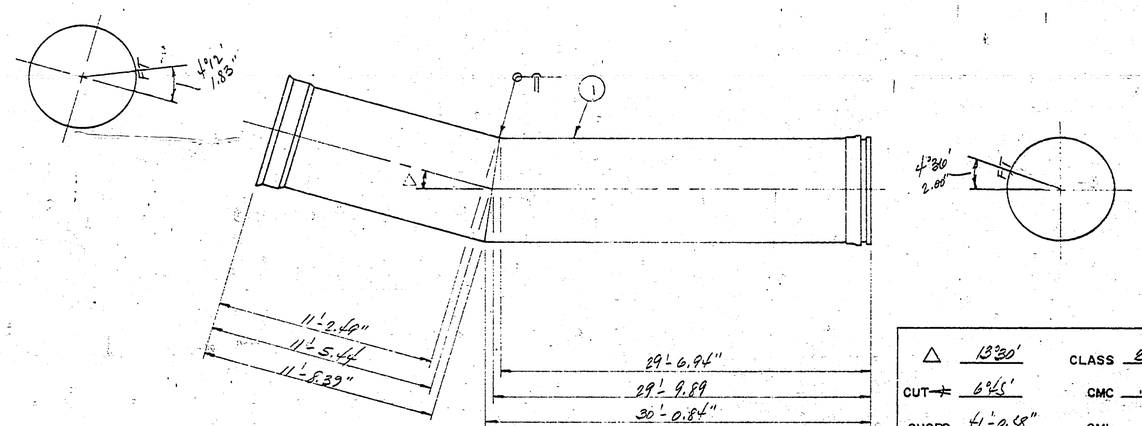

△	13°30'	CLASS	260
CUT ⊥	6°45'	CMC	.75
CHORD	41'-0.58"	CML	.75

191
129

Ameron PIPE PRODUCTS GROUP

: RUSSIAN RIVER - CONTRACT #3

CHANGE ORDERS	SYMBOL	REVISION	DATE	BY	APPV'D

UNLESS OTHERWISE SPECIFIED DIMENSIONS ARE IN INCHES

TOLERANCES

FRACT	X	XX	XXX	ANGLE
±	±	±	±	±

DWG SCALE

DRAWN	KW	12-4-75
CHECKED		
APPV'D.		

2265

60-4-102.311.62 1F32.0

1000-1000 (8 70)

1F-33

FLAG	ITEM NO	QUANTITY THIS DWG	DESCRIPTION	MATERIAL SPECIFICATION
	1	4'-11.64	49.875" O.D. x 10 GA. CYL.	
	2	1	48" CL. "D" SKIRTED FLG. SEE SHT 18L	
	3	1	2" x 3000# THREADOLET	
	4	1	9/16" R x 6" SQ COLLAR Roll To 24.94" R.	ASTM A283 GR C

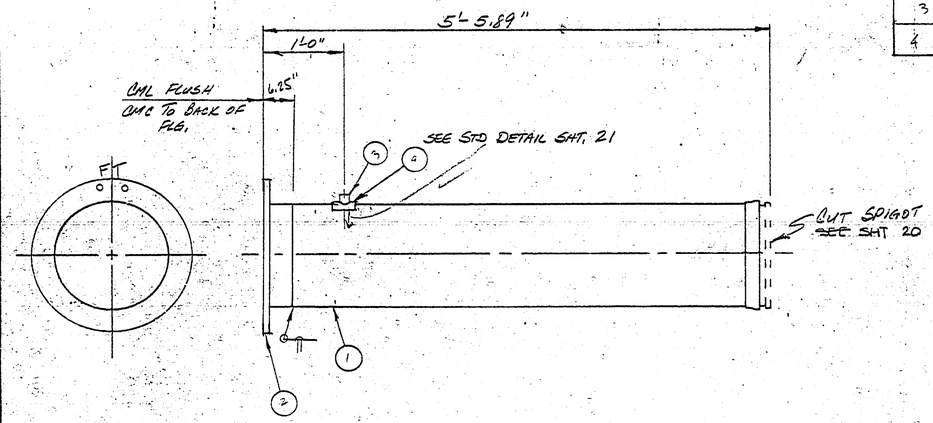

CLASS 900
CMC .75
CML .75
198
129
OS #6

AMERON PIPE PRODUCTS GROUP

RUSSIAN RIVER - CONTRACT #3

CHANGE ORDERS	SYMBOL	REVISION	DATE	BY	APPV'D

UNLESS OTHERWISE SPECIFIED DIMENSIONS ARE IN INCHES
TOLERANCES

FRACT	.X	.XX	.XXX	ANGLE
±	±	±	±	±

DWG. SCALE

DRAWN KW 12-5-75
CHECKED
APPV'D

2265
60-4-102.311.63 F33.0

1F34

FLAG	ITEM NO	QUANTITY THIS DWG	DESCRIPTION	MATERIAL SPECIFICATION
	1	6'-4.37"	48.875" O.D. x 10 GA. CYL.	
	2	1	48" CL. "D" SKIRTED FLG. SEE SHT 181	
	3	1	2" x 3000# THREADOLET	
	4	1	48" BELL RING.	
	5	1	3/16" R x 6" SQ COLLAR PULL TO 24.94" R.	ASTM A283 GR C

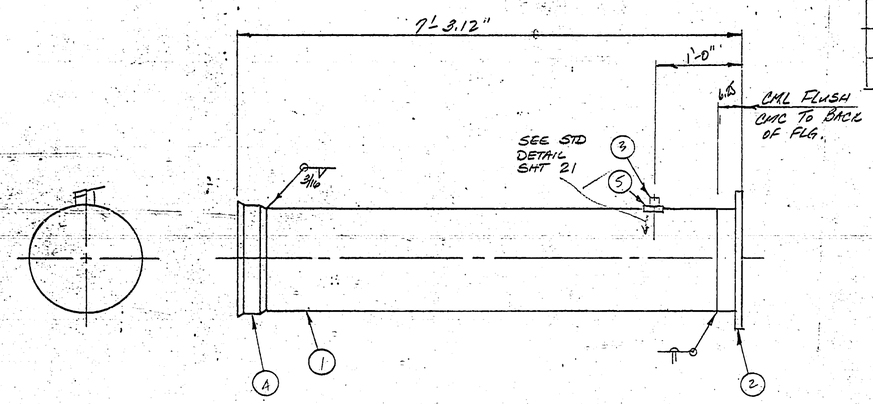

CLASS 200
CMC .25
CML .75
CS # 6

199
129

AMERON PIPE PRODUCTS GROUP

RUSSIAN RIVER - CONTRACT #3

UNLESS OTHERWISE SPECIFIED DIMENSIONS ARE IN INCHES
TOLERANCES
FRACT ± X ± XX ± XXX ± ANGLE ±

DRAWN LW 12-5-75
CHECKED
APPV'D

2265
60-4-102.311.64 240

CHANGE ORDERS	SYMBOL	REVISION	DATE	BY	APPV'D

DWG SCALE

2-CUT

1F35

FLAG	ITEM NO	QUANTITY THIS DWG	DESCRIPTION	MATERIAL SPECIFICATION
	1.	11'-4"	49.875" O.D. x 10GA CYL.	
	2	1	48" BELL RING	
	3	1	2" x 3000# THREADOLET	
	4	1	3/16" PL x 6" SQ COLLAR ROLL TO 24.94" R.	ASTM A 283 GRC

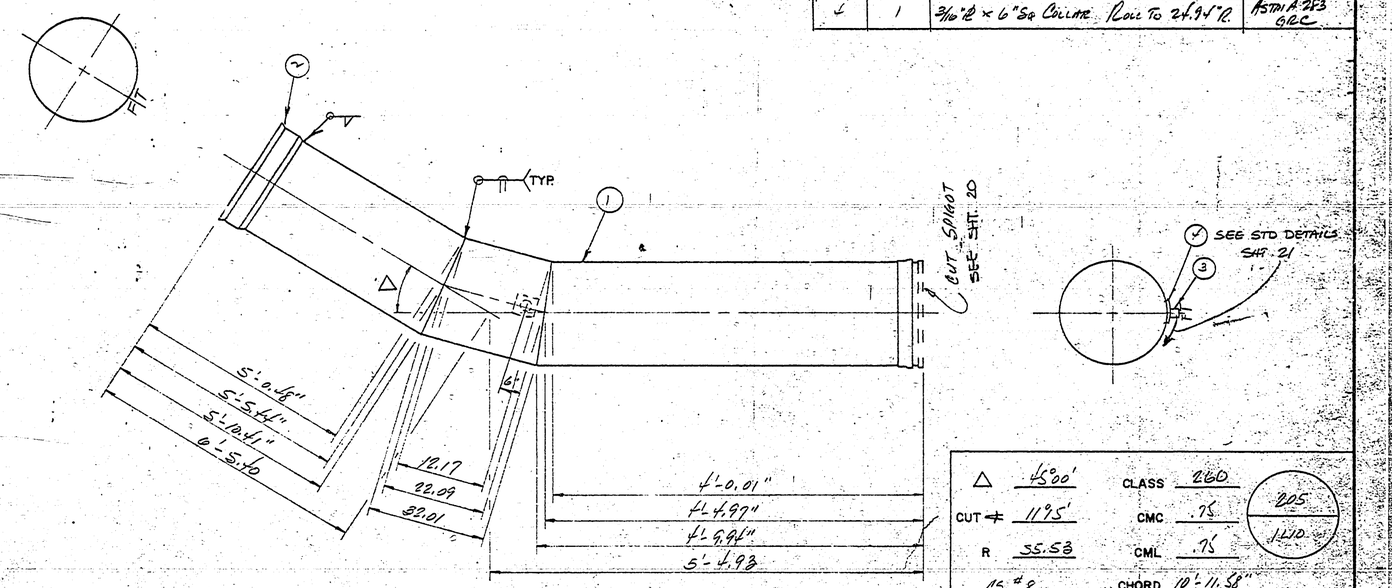

△	45°00'	CLASS	260
CUT ⊄	11°15'	CMC	.75
R	55.53	CML	.75
CS #8		CHORD	10'-11.58"

205 / 1410

Ameron PIPE PRODUCTS GROUP

RUSSIAN RIVER - CONTRACT #3

CHANGE ORDERS	SYMBOL	REVISION	DATE	BY	APPV'D.

UNLESS OTHERWISE SPECIFIED DIMENSIONS ARE IN INCHES

TOLERANCES

FRACT.	.X	.XX	.XXX	ANGLE
±	±	±	±	±

DWG. SCALE

DRAWN	KW	12-4-75
CHECKED		
APPV'D.		

2265

60-4-102.311.65

F35.0

2-CUT

1F36

FLAG	ITEM NO	QUANTITY THIS DWG	DESCRIPTION	MATERIAL SPECIFICATION
	1	21'-4.74"	49.875" O.D. x 10GA CYL.	
	2	1	48" M3516 SPIGOT	

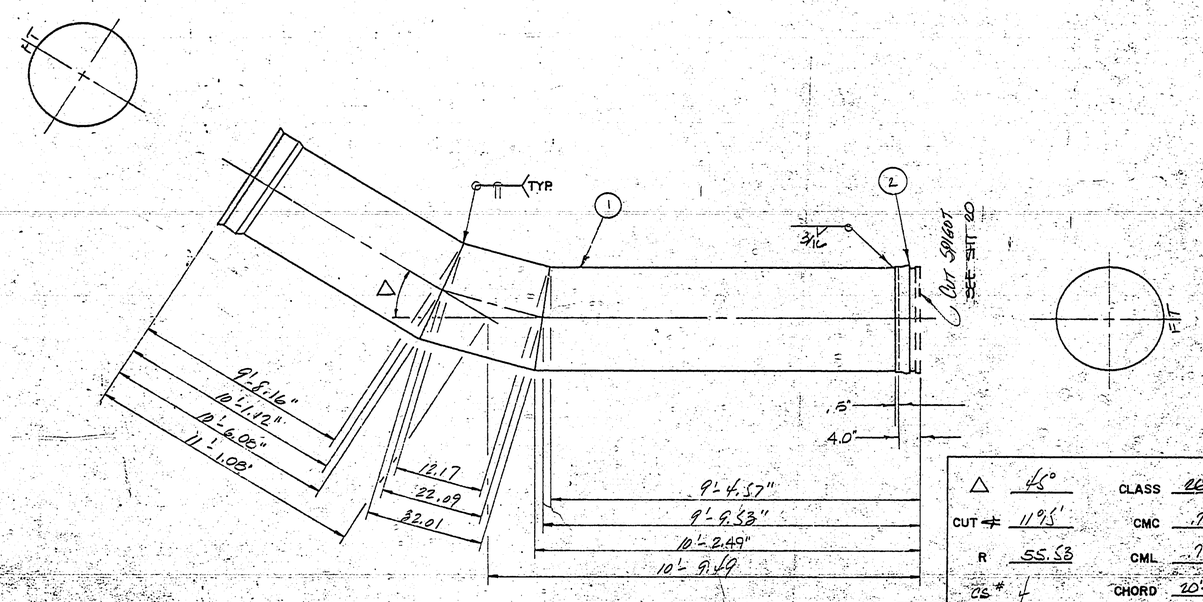

△	45°	CLASS	200
CUT ≠	11°15'	CMC	.75
R	55.53	CML	.75
OS #	4	CHORD	20'-2.59"

206
1210

Ameron PIPE PRODUCTS GROUP

Russian River - Contract #3

CHANGE ORDERS	SYMBOL	REVISION	DATE	BY	APPV'D.

UNLESS OTHERWISE SPECIFIED DIMENSIONS ARE IN. INCHES

TOLERANCES

FRACT.	.X	.XX	.XXX	ANGLE
±	±	±	±	±

DWG. SCALE

DRAWN	KW	12-4-75
CHECKED		
APPV'D.		

2265

60-4-102.311.66 F36.0

1000-1000 (8/70)

1-CUT

1F37

FLAG	ITEM NO	QUANTITY THIS DWG	DESCRIPTION	MATERIAL SPECIFICATION
	1	41'-3.25"	49.875" O.D. x 10GA. CYL.	
	2	1	2" x 3000# THREADOLET	
	3	1	3/16" R x 6" SQ COLLAR ROLL TO 24.875" R.	ASTM A283 GR C

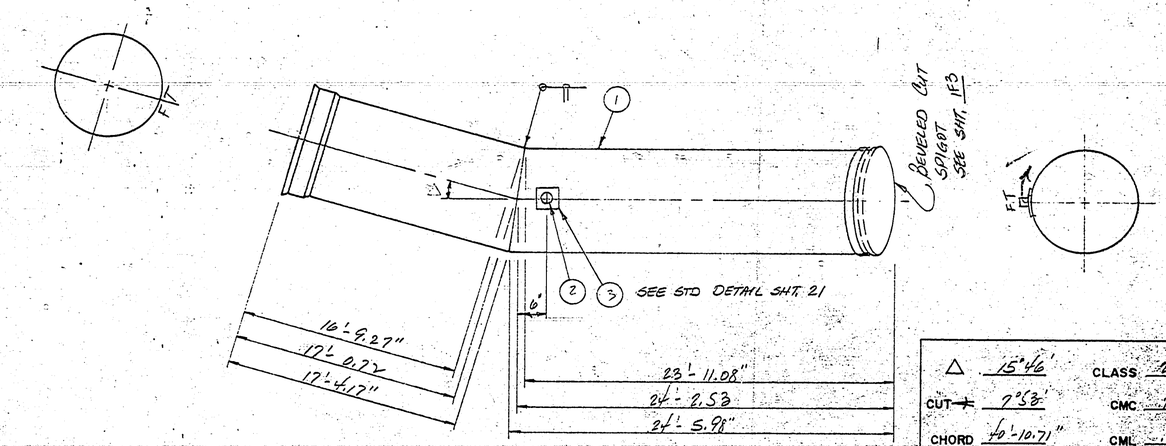

△ 15°46'
CUT ⊥ 7°53'
CHORD 40'-10.71"
CLASS 200
CMC .75
CML .75
212
1410

Ameron PIPE PRODUCTS GROUP

RUSSIAN RIVER - CONTRACT #3

CHANGE ORDERS	SYMBOL	REVISION	DATE	BY	APPV'D.

UNLESS OTHERWISE SPECIFIED DIMENSIONS ARE IN INCHES.

TOLERANCES				
FRACT.	.X	.XX	.XXX	ANGLE
±	±	±	±	±

DWG. SCALE

DRAWN	KW	12-4-75
CHECKED		
APPV'D.		

2265
60-4-102.311.67

1F37.0

1F-3B

FLAG	ITEM NO	QUANTITY THIS DWG.	DESCRIPTION	MATERIAL SPECIFICATION
	1	41'-3.25"	49.875" O.D. x .105A. CYL.	
	2	1	10" x 150# SLIP-ON FLG. F.F.	
	3	10"	10" SCH. 20 STEEL PIPE	
	4	1	20" SQ x 3/16" R. COLLAR	

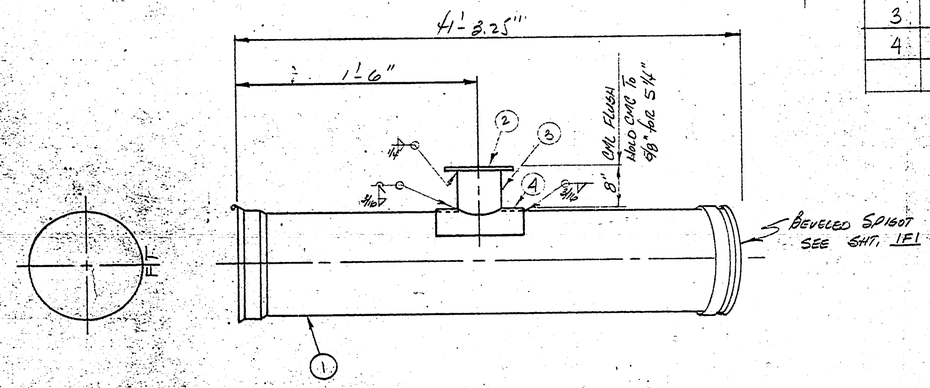

CLASS 260
CMC .75
CML .75
.25" for 10"

231
1470

Ameron PIPE PRODUCTS GROUP

RUSSIAN RIVER - CONTRACT #3

UNLESS OTHERWISE SPECIFIED DIMENSIONS ARE IN INCHES
TOLERANCES

FRACT.	.X	.XX	.XXX	ANGLE
±	±	±	±	±

DRAWN KW 12-5-75
CHECKED
APPV'D.

DWG. SCALE

CHANGE ORDERS	SYMBOL	REVISION	DATE	BY	APPV'D.

2265
60-4-102.311.68 1F-30.0

1000-1000 (8/70)

2-CUT

1F39

FLAG	ITEM NO.	QUANTITY THIS DWG.	DESCRIPTION	MATERIAL SPECIFICATION
	1	41'-3.25"	49.875" O.D. x 10GA. CYL.	

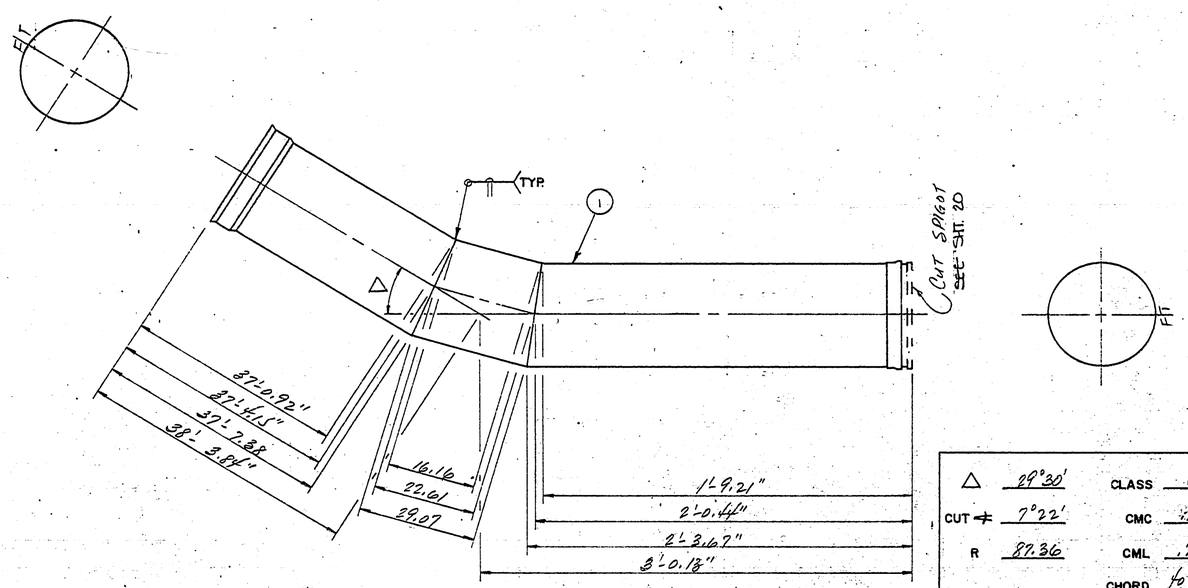

△	29°30'	CLASS	260
CUT ∡	7°22'	CMC	.75
R	87.36	CML	.75
		CHORD	40'-11.61"

232 / 1211

Ameron PIPE PRODUCTS GROUP

RUSSIAN RIVER - CONTRACT #3

CHANGE ORDERS	SYMBOL	REVISION	DATE	BY	APPV'D.

UNLESS OTHERWISE SPECIFIED DIMENSIONS ARE IN INCHES

TOLERANCES

FRACT.	.X	.XX	.XXX	ANGLE
±	±	±	±	±

DWG. SCALE

DRAWN	LW	12-4-75
CHECKED		
APPV'D.		

2265

60-4-102.311.69

1F39.0

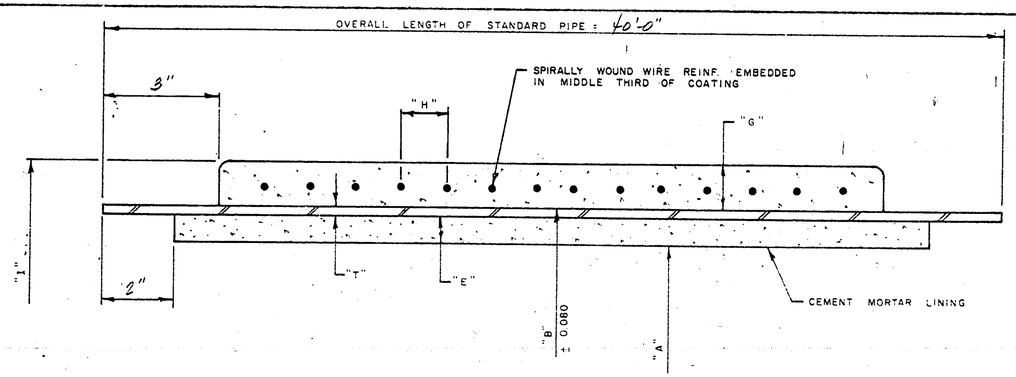

MANUFACTURING DATA

NOMINAL PIPE I.D. "A" (IN)	PIPE CLASS	BID ITEM		STEEL CYLINDER: GAGE OR THICKNESS "T"	A y / FT (SQ IN)	O.D CYL "B" (IN)	PLANT TEST PRESSURE (PSI)	CYL. WEIGHT (LB/FT)	LINING & COATING: WIRE REINF. Ø	WIRE SPACING "H" (IN)	WIRE WEIGHT (LB/FT)			NOMINAL LINING THICKNESS "E" (IN)	MIN COATING THICKNESS "G" (IN)	MAX. PIPE O.D. "I" (IN)	APPROX WEIGHT OF 40 PIPE (LBS)
27	220			.1345 / 10GA	1.61	25.75	296	36.70	15GA	1.25	.93			.75	.75	27.25	6510
33	220			10GA	1.61	34.875	218	49.78	15GA	1.25	1.27			.75	.75	36.88	8820

PIPE SPECIFICATION: AWWA C-201

CEMENT SPECIFICATION: ASTM C150. TYPE II

MIN. STEEL YIELD POINT = 33,000 P.S.I.

WELDING: SEE SHT. 3

PLASTIC COVERS REQ'D

SEE SHT. 2 FOR MARKING OF PIPE

AMERON PIPE PRODUCTS GROUP

RUSSIAN RIVER - COTATI INTERTIE PROJECT

SYMBOL	REVISION	DATE	BY	APPV'D

DRAWN JW 12-4-75

CHECKED

APPV'D

2265 7.0

60-4-102.311.7

I-CUT

1F-40

FLAG	ITEM NO	QUANTITY THIS DWG	DESCRIPTION	MATERIAL SPECIFICATION
	1	41'-3.25"	49.875" O.D. x 10GA CYL.	
	2	1	2" x 3000# THREADOLET	
	3	1	3/16" R x 6" SQ COLLAR ROLL TO 24.94" R.	ASTM A-283 GR C

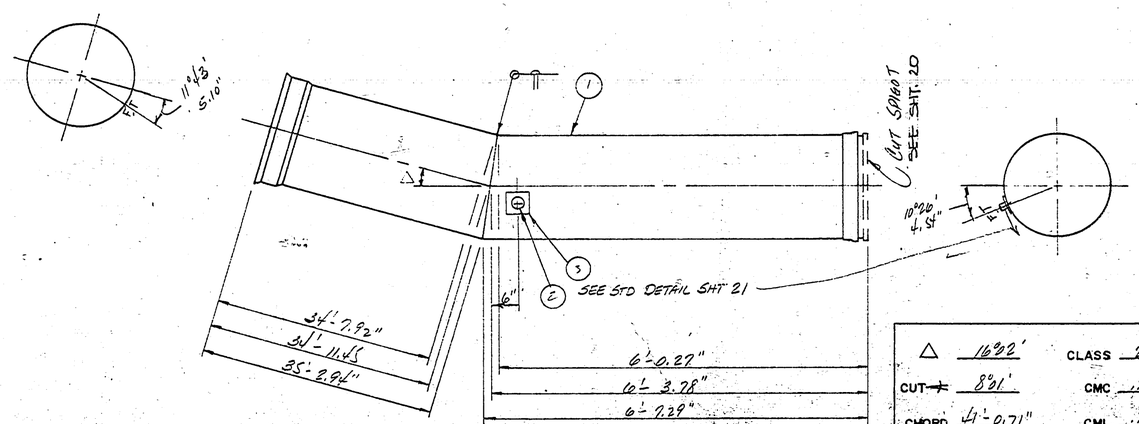

△	16°02'	CLASS	260
CUT ⊣	8°01'	CMC	.75
CHORD	41'-0.71"	CML	.75

268
142

Ameron PIPE PRODUCTS GROUP

RUSSIAN RIVER - CONTRACT # 3

CHANGE ORDERS	SYMBOL	REVISION	DATE	BY	APPV'D.

UNLESS OTHERWISE SPECIFIED DIMENSIONS ARE IN INCHES

TOLERANCES

FRACT.	.X	.XX	.XXX	ANGLE
±	±	±	±	±

DWG. SCALE

DRAWN	KW	12-5-75
CHECKED		
APPV'D.		

2265

60-4-102.311.70 1F40.0

1000 1000 (8/70)

1F-41

FLAG	ITEM NO	QUANTITY THIS DWG	DESCRIPTION	MATERIAL SPECIFICATION
	1	44'-9"	49.875" O.D. x 1/4" ℞ CYL.	ASTM A570 GRC
	2	1	48" CL. "D" SKIRTED FLG. SEE SHT 131	
	3	1	48" x 1" ℞ CROTCH PLATE SEE SHT 136	

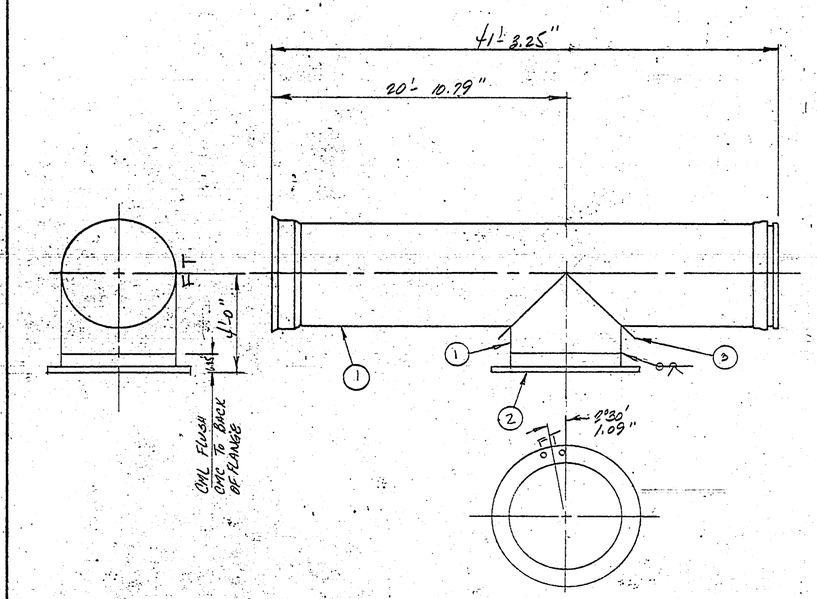

CLASS 260
CMC .75
CML .75
CS #

280
1413

Ameron PIPE PRODUCTS GROUP

RUSSIAN RIVER - CONTRACT #3

CHANGE ORDERS	SYMBOL	REVISION	DATE	BY	APPV'D

UNLESS OTHERWISE SPECIFIED DIMENSIONS ARE IN INCHES

TOLERANCES

FRACT	X	XX	XXX	ANGLE
±	±	±	±	±

DWG. SCALE

DRAWN	KW	12-5-75
CHECKED		
APPV'D		

2265

60-4-102.311.71

1F-41.0

1000-1000 (8/70)

1F42

FLAG	ITEM NO	QUANTITY THIS DWG	DESCRIPTION	MATERIAL SPECIFICATION
	1	6'-3.25"	49.875" O.D. x 10 GA. CYL.	

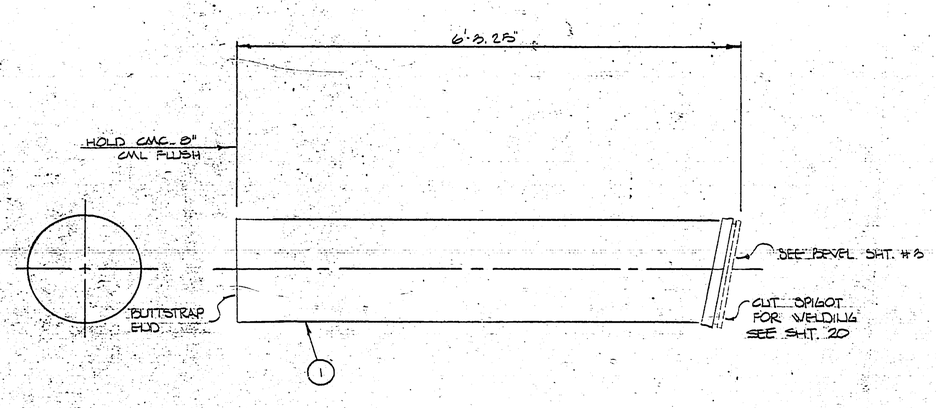

CLASS 260 HD
CMC .75
CML .75
CUT SCH. 3

285
1L13

Ameron PIPE PRODUCTS GROUP

RUSSIAN RIVER - COTATI INTERTIE PROJECT

CHANGE ORDERS	SYMBOL	REVISION	DATE	BY	APPV'D

UNLESS OTHERWISE SPECIFIED DIMENSIONS ARE IN INCHES

TOLERANCES

FRACT.	.X	.XX	.XXX	ANGLE
±	±	±	±	±

DWG. SCALE

DRAWN	CLL	12/5/75	CONTRACT NO. 3
CHECKED			
APPV'D			2265 1F42.0

60-4-102.311.72

1000-1000 (8/70)

1F43

FLAG	ITEM NO	QUANTITY THIS DWG	DESCRIPTION	MATERIAL SPECIFICATION
	1	19'-10.51"	49.875" O.D. x 10 GA. CYL.	
	2	1	49.875" O.D. x 37.875" O.D. x 4'-0" LONG ROLLED CONCENTRIC REDUCER-3/16" PL	ASTM A283 GrC
	3	1	36" x 12.25" O.A.L. SEE SHT 131 CL. "D" SKIRTED FLANGE	
	4	1	4" 150# SLIP-ON FLANGE	
	5	10"	4" STD. WT. STEEL PIPE	
	6	1	8" SQ x 1/4" PL COLLAR ROLLED TO A 24.9375" RADIUS	ASTM A283 GrC

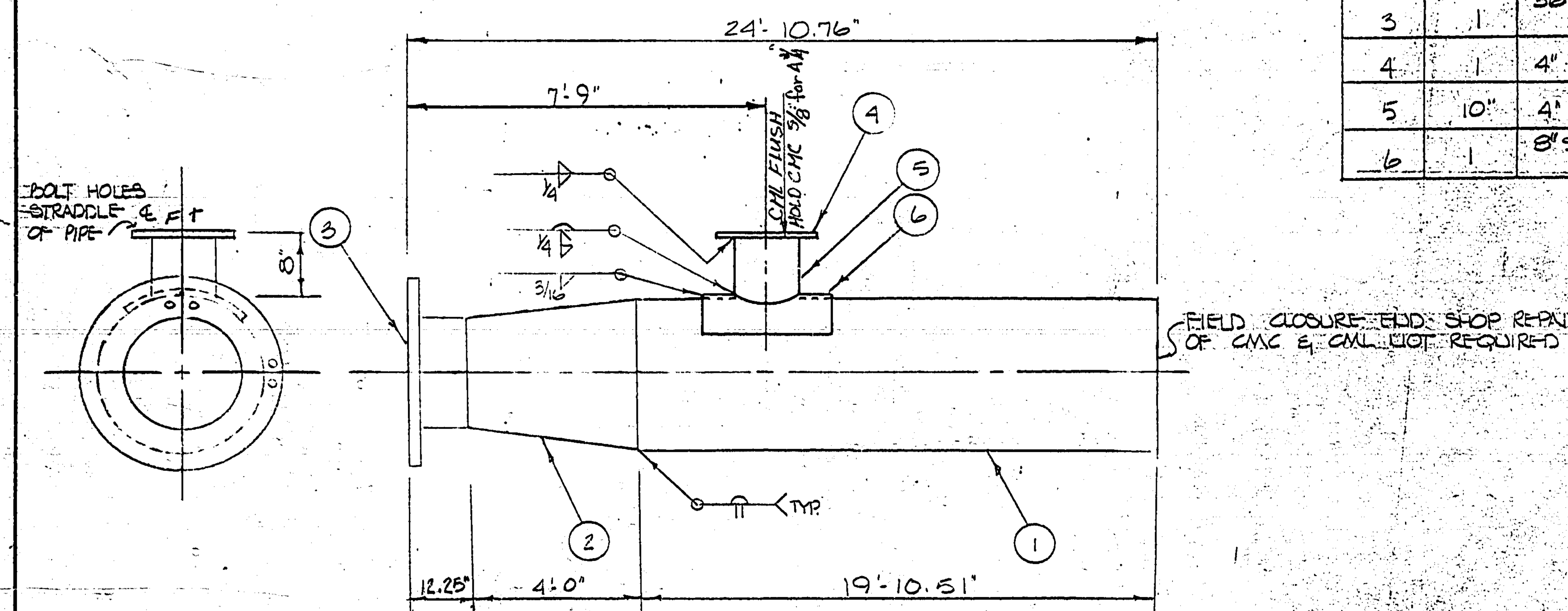

CLASS 260D
CNC .75
CML .75 Outlet .25
CUT SCH. 0
286 / 143

Ameron PIPE PRODUCTS GROUP

RUSSIAN RIVER - COTATI INTERTIE PROJECT

UNLESS OTHERWISE SPECIFIED DIMENSIONS ARE IN INCHES
TOLERANCES
FRACT. | X | XX | XXX | ANGLE

	SYMBOL	REVISION	DATE	BY	APPV'D

DWG SCALE

DRAWN ECL 12/8/75 CONTRACT NO 3
CHECKED
APPV'D

2265 60-4-102.311.73 1F430

1F-4

FLAG	ITEM NO.	QUANTITY THIS DWG.	DESCRIPTION	MATERIAL SPECIFICATION
	1	20'-0"	8" SCH. 40 STEEL PIPE	
	2	2	8" x 150# SLIP-ON FLG. F.F.	
	3	1	8" x 90° STD WT. ELBOW L.R.	

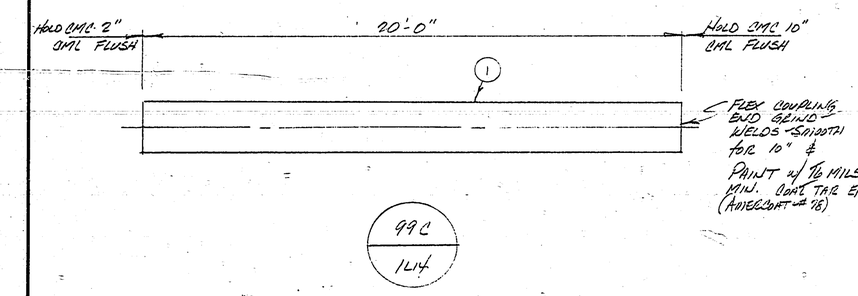

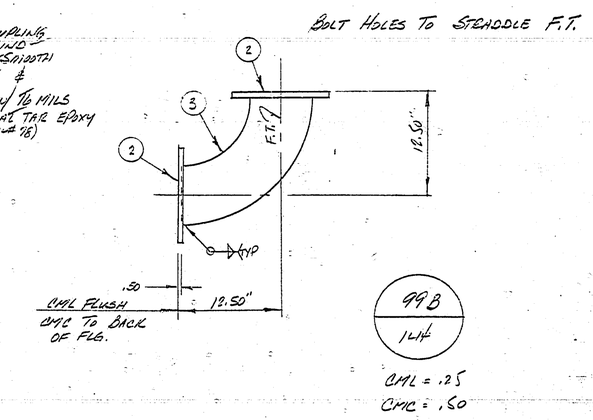

CHANGE ORDERS	SYMBOL	REVISION	DATE	BY	APPV'D.

UNLESS OTHERWISE SPECIFIED DIMENSIONS ARE IN INCHES

TOLERANCES

FRACT.	.X	.XX	.XXX	ANGLE
±	±	±	±	±

DWG. SCALE

Ameron PIPE PRODUCTS GROUP

RUSSIAN RIVER - CONTRACT #3

DRAWN	LW	12-8-75
CHECKED		
APPV'D.		

2265 1F4.0

60-4-102.311.74

F46

FLAG	ITEM NO.	QUANTITY THIS DWG.	DESCRIPTION	MATERIAL SPECIFICATION
			49.875" O.D. CYLINDERS	

STANDARD SECTIONS w/ CUT SPIGOT (SEE 20 SHT.)

Pc. No.	LAYOUT REF.	Pc. No.	LAYOUT REF.	Pc. No.	LAYOUT REF.
25	1L2				
28	1L2				
29	1L2	196	1L9		
63	1L3	201	1L9		
66	1L4	202	1L9		
67	1L4				
101	1L4				
122	1L5				
132	1L6				
154	1L7				
155	1L7				
174	1L8				
175	1L8				
186	1L8				
182	1L9				
204	1L9				
207	1L10				
208	1L10				

△NOTE: PAINT NOT REQ. @ WELDED BELLS OR WHERE SPIGOT IS CUT.

OK

APPRO...
JAN 21 1976

CHANGE ORDERS	SYMBOL	REVISION	DATE	BY	APPV'D
	△	Deleted Rev. #62 & #7, ADDED NOTE	1/14/76	CCC	

UNLESS OTHERWISE SPECIFIED DIMENSIONS ARE IN INCHES
TOLERANCES

FRACT.	X	XX	XXX	ANGLE
±	±	±	±	±

DWG. SCALE

Ameron PIPE PRODUCTS GROUP

RUSSIAN RIVER - CONTRACT #3

DRAWN	LLL	12/9/75
CHECKED		
APPV'D		

~~2205~~ 2314

60-4-102.311.75

1000-1000 (8/70)

1FND

FLAG	ITEM NO.	QUANTITY THIS DWG.	DESCRIPTION	MATERIAL SPECIFICATION
	1	12'-9.50"	8" SCH. 20 STEEL PIPE	

40

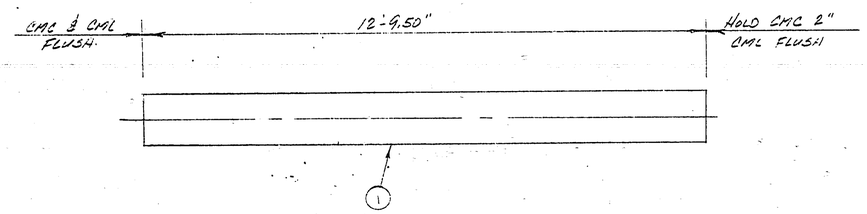

99D
1LH

CML = .25
CMC = .50

Ameron PIPE PRODUCTS GROUP

RUSSIAN RIVER - CONTRACT #3

CHANGE ORDERS	SYMBOL	REVISION	DATE	BY	APPV'D.

UNLESS OTHERWISE SPECIFIED DIMENSIONS ARE IN INCHES

TOLERANCES				
FRACT.	.X	.XX	.XXX	ANGLE
±	±	±	±	±

DWG. SCALE

DRAWN	KW	12-9-75
CHECKED		
APPV'D.		

2265 1F46.0

60-4-102.311.76

"D" SKIRTED

B51

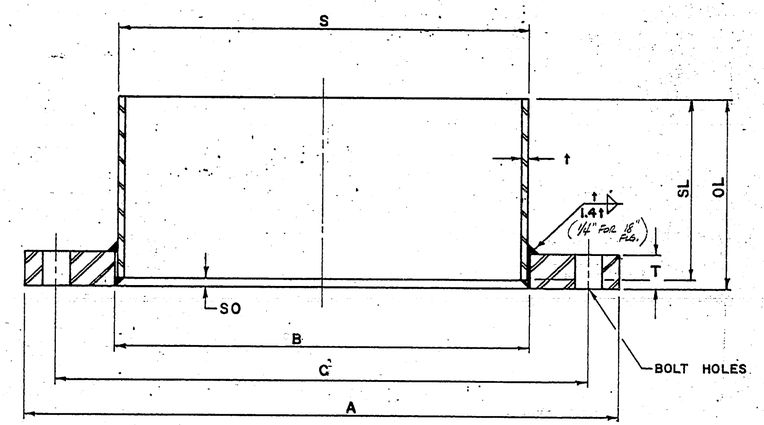

NOMINAL PIPE SIZE	MAT'L LIST NO	QUANTITY	OVERALL LENGTH OL	SKIRT LENGTH SL	SKIRT THICKNESS t	SKIRT OFFSET SO	SKIRT O.D. S	I.D. FLANGE B	O.D. FLANGE A	NUMBER BOLT HOLES	BOLT CIRCLE C	DIAM. BOLT HOLES	FLANGE THICKNESS T
24									32	20	29 1/2	1 3/8	1 1/4
30									38 3/4	28	36	1 3/8	1 3/8
36		1	12.25	12.00	1/4	1/4	37.875	37.94	46	32	42 3/4	1 5/8	1 5/8
42									53	36	49 1/2	1 5/8	1 3/4
48		3	6.25	6.00	1/4	1/4	46.875	46.94	59 1/2	44	56	1 5/8	1 3/4
54									66 1/4	44	62 3/4	1 7/8	2 1/8
60									73	52	69 1/4	1 7/8	2 1/4
18		7	12.50	12.00	1/2	1/2	18.00	18.06	25	16	22 3/4	1 1/4	1 1/16

SPECIFICATIONS

STEEL: -

FLANGE - ASTM A-283, Gr. B, C or D
SKIRT - ASTM A-283, Gr. C or D
ASTM A-570, Gr. C

FACING:

FINAL MACHINING OF THE FLANGES SHALL BE DONE ONLY AFTER ALL WELDING TO THE PIPE SKIRT IS COMPLETED. FLANGES SHALL BE FACED NORMAL TO THE LONGITUDINAL AXIS OF THE PIPE. THE FLANGES SHALL BE FACED SMOOTH OR MAY HAVE A SERRATED FINISH OF APPROXIMATELY 32 SERRATIONS PER INCH, APPROXIMATELY 1/64" DEEP. SERRATIONS MAY BE SPIRAL OR CONCENTRIC. EDGES OF FACED SURFACES AND BOLT HOLES SHALL BE DEBURRED.

TOLERANCES:

INSIDE DIAMETER + 1/16" - 0"

OUTSIDE DIAMETER ± 1/8"

THICKNESS OF FLANGES + 1/8" - 0"

BOLT CIRCLE ± 1/16"

OUTSIDE DIAMETER SKIRT ± 0.080" MEASURED AT ANY POINT

BOLT HOLES SHALL BE EQUALLY SPACED ± 1/64

DIAMETERS A, B AND C TO BE CONCENTRIC ABOUT CENTERLINE ± 1/16"

SKIRT CLOSING SEAMS SHALL BE FULL PENETRATION BUTTWELD WITH 1/16" MAX. CROWN

SYMBOL	REVISION	DATE	BY	APPV'D.

Ameron PIPE PRODUCTS GROUP

Russian River - Contract #3

DRAWN	LW	12-8-75	AWWA CLASS "D" SKIRTED FLG.
CHECKED			
APPV'D.			2265

60-4-102.311.77

B1.0

1000 1004 (8/70)

D BLIND

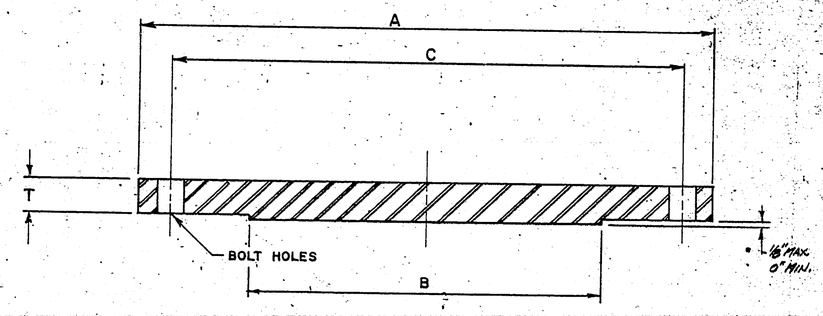

NOMINAL PIPE SIZE	MAT'L LIST NO	QUANTITY	RAISED FACE B	O.D. FLANGE A	NUMBER BOLT HOLES	BOLT CIRCLE C	DIAM. BOLT HOLES	FLANGE THICKNESS T
12			11	19	12	17	1	13/16
14			13	21	12	18 3/4	1 1/8	15/16
16			15	23 1/2	16	21 1/4	1 1/8	1
18			15"	25	16	22 3/4	1 1/4	1 1/16
20			19	27 1/2	20	25	1 1/4	1 1/8
24			23	32	20	29 1/2	1 3/8	1 1/4
30			29	38 3/4	28	36	1 3/8	1 3/8
36			35	46	32	42 3/4	1 5/8	1 5/8
42			41	53	36	49 1/2	1 5/8	1 3/4
48			47	59 1/2	44	56	1 5/8	1 3/4

SPECIFICATIONS

STEEL:

ASTM A-283, Gr. B, C or D

FACING:

THE FLANGES SHALL BE FACED SMOOTH OR MAY HAVE A SERRATED FINISH OF APPROXIMATELY 32 SERRATIONS PER INCH, APPROXIMATELY 1/64" DEEP. SERRATIONS MAY BE SPIRAL OR CONCENTRIC. EDGES OF FACED SURFACES AND BOLT HOLES SHALL BE DEBURRED.

TOLERANCES:

RAISED FACE DIAMETER + 0" − 1/8"

OUTSIDE DIAMETER ± 1/8"

THICKNESS OF FLANGES + 1/8" − 0"

BOLT CIRCLE ± 1/16"

BOLT HOLES SHALL BE EQUALLY SPACED ± 1/64"

DIAMETERS A, B AND C TO BE CONCENTRIC ABOUT CENTERLINE ± 1/16"

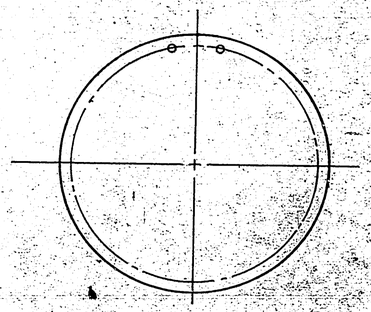

Ameron PIPE PRODUCTS GROUP

RUSSIAN RIVER - CONTRACT #3

SYMBOL	REVISION	DATE	BY	APPV'D

DRAWN	LW	12-8-75	AWWA CLASS "D" BLIND FLG.
CHECKED			
APPV'D			2265

60-4-102.311.78

1000-1004 (8/70)

"D" BLIND

183

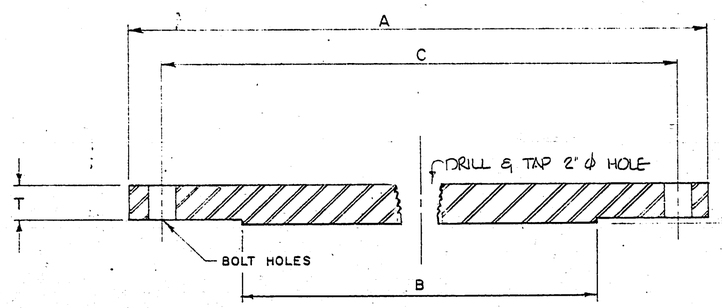

NOMINAL PIPE SIZE	MAT'L LIST NO	QUANTITY	RAISED FACE B	O.D. FLANGE A	NUMBER BOLT HOLES	BOLT CIRCLE C	DIAM. BOLT HOLES	FLANGE THICKNESS T
12			11	19	12	17	1	13/16
14			13	21	12	18 3/4	1 1/8	15/16
16			15	23 1/2	16	21 1/4	1 1/8	1
18			17"	25	16	22 3/4	1 1/4	1 1/16
20			19	27 1/2	20	25	1 1/4	1 1/8
24			23	32	20	29 1/2	1 3/8	1 1/4
30			29	38 3/4	28	36	1 3/8	1 3/8
36			35	46	32	42 3/4	1 5/8	1 5/8
42			41	53	36	49 1/2	1 5/8	1 3/4
48			47	59 1/2	44	56	1 5/8	1 3/4

SPECIFICATIONS

STEEL
ASTM A-283, Gr. B, C or D

FACING
THE FLANGES SHALL BE FACED SMOOTH OR MAY HAVE A SERRATED FINISH OF APPROXIMATELY 32 SERRATIONS PER INCH, APPROXIMATELY 1/64" DEEP. SERRATIONS MAY BE SPIRAL OR CONCENTRIC. EDGES OF FACED SURFACES AND BOLT HOLES SHALL BE DEBURRED.

TOLERANCES:

RAISED FACE DIAMETER +0" − 1/8"

OUTSIDE DIAMETER ± 1/8"

THICKNESS OF FLANGES + 1/8" − 0"

BOLT CIRCLE ± 1/16"

BOLT HOLES SHALL BE EQUALLY SPACED ± 1/64"

DIAMETERS A, B AND C TO BE CONCENTRIC ABOUT CENTERLINE ± 1/16"

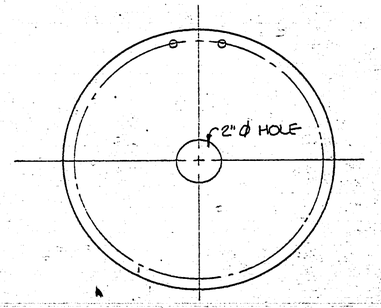

RUSSIAN RIVER-COTATI INTERTIE PROJECT

DRAWN CLL 12/9/76 AWWA CLASS "D" BLIND FLG.

CHECKED

APPV'D

2265 183.0

60-4-102.311.79

DRAWING NO. 60-4-102.306

48 SC 260 #(2) (240)

10 GA.

33' (L 220' HD.)

20' (L 220' HD.)

BID ITEM	UNIT LENGTH	PIECE NO.	NO. REQ'D	DESCRIPTION	DETAIL DWG. REF.	SLOPE HORIZ.	SLOPE DIST.	PLAN (LOOKING IN DIRECTION OF LAYING)	INV STATION—READ UP	PULL, BEVEL OR TURN	INV ELEVATION	SLOPE TANGENT COSINE	PROFILE NOTE: VIEW FROM RIGHT SIDE OF PIPE
								CONTINUED FROM					
		1F2	1	STD	5	41.00 / 40.96		#11	108+90.48		101.20		Laid Six Joints
		1F2	1	SPC BEVEL SECTION →	1F2	40.91 / 40.88		#10	109+31.45	Start 9 Mend	102.90	-2°24' / .041790 / 999128	
		1F2	2	STD	5	82.00 / 81.98		#8/12	109+72.32	BEV 1°16'dn	104.60		
		1F10	1	SPC W/ 2" AIR VALVE	1F10	41.00 / 40.99		#14 (AIR VALVE TYPE C)	110+54.31	START — SEE change note To P.T. Drwg	106.20	-1°08' / .019783 / 999804	Laid 3-Joints 8 Mend
		1F2	1	STD	5	41.00 / 41.00		#9	110+90.00 / 110+95.30	PULL 1°08'dn	107.00		
		1F4B	1	SPC [redacted] W/ 1½' ½" ROD SPIGOT COATING HOLDBACK FOR WELDING	1F4B	41.00 / 41.00		Double Weld Joints Like 48 SC 500 — CASING BY OTHERS	111+36.30 / 111+46.50 / 111+77.30		107.00		
		1F4B	1	SPC [redacted] W/ ½" TAP IN PBELL & PBELL COATING HOLDBK FOR WELDING	1F4B	41.00 / 41.00			112+13.50 / 112+18.30		107.00		
		1F9	1	SPC SHORT SECTION - CUT SPIGOT	1F9	24.23 / 24.23			112+42.53		107.00		
		1F8	1	SPC W/ 2" AIR VALVE - CUT SPIGOT	1F8	41.00 / 41.00		AIR VALVE TYPE C	112+75.00 / 112+83.53		107.00		
		1F7	1	4-CUT ELBOW - CUT SPIGOT	1F7	6.00 / 6.00			112+89.53	H Δ 92°28'lt	107.00		
						36.98 / 36.98			113+26.51		107.00		
		1F5 / 1F6	1	SPC - W/ CONCENTRIC REDUCER, BUTTSTRAP END, & 24" OUTLET W/ BUTTSTRAP & FLEX. END. BUTTSTRAP (*(1) FLG. CPLG. ADAPT.)	1F5 / 1F6	(36.13) / 33.65 / 33.65		WELD CLOSURE — CONTRACTOR TO CUT PIPE TO REQUIRED LENGTH; 24" LINE A; F.C.A.; CONCENTRIC REDUCER	113+39.16 / 113+43.66				
		1A	1	2-CUT ELBOW W/ 18" MANHOLE, CONCENTRIC REDUCER, & FLEX END X BUTTSTRAP END BUTTSTRAP (*(1) FLG. CPLG. ADAPT.)	1F4 / 1F4A	4.50 / 4.50 / 17.34 / 17.34		CONCENTRIC REDUCER TO 18" M.H.; F.C.A.	113+60.16		107.60		
									113+64.66 / 113+75.00	H Δ 45°00' rt	107.60		
				NUTS, GASKET, BOLTS				CONTINUED FROM	113+82.00		107.80	+0°00' / .000000 / 1.000000	

(1) * FLG. CPLG. ADAPTER W/ STUDS & NUTS

(2) * 48 SC 260 / (240) = PIPE CLASS

F.T. OF HD. SHOWN ON CONTRACT DRAWINGS

CONTRACT DRAWING REFERENCE | PIPE SIZE, TYPE AND CLASS | (JOINT DETAIL) REFERENCE

BILLING

LAYOUT DRAWING: STATION 113+82.00± TO STATION 108+90.48

SYMBOL	REVISION	DATE	BY	APPV'D.

Ameron UTILITY PRODUCTS GROUP

RUSSIAN RIVER - COTATI INTERTIE PROJECT

DRAWN	CLL	11/6/75	CONTRACT NO. 3
CHECKED			
APPV'D.			2265

60-4-102.311.8

1L1.0

1000-1003 (7/75)

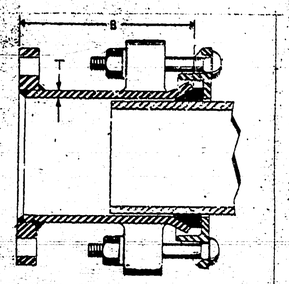

* w/ HARNESS LUGS PER AWWA MANUAL M-11 (100 PSI) — INCLUDE STUDS & NUTS —

PIECE NO.	SHEET NO.	MT'L LIST	QUANTITY	PIPE O. D. (see note)	MIDDLE RING B	MIDDLE RING T	FLANGE SIZE	FLANGE CLASS	
				31.907	10 11/16	1/4	30	"D"	* — 95
				25.782	10 11/16	1/4	24	"D"	* — 95
				8.657	10 5/16	1/4	8	"D"	112 psi

SPECIFICATIONS

1. COUPLINGS SHALL BE SMITH BLAIR NO. 913, BAKER NO. 602, OR EQUAL.

2. MATERIALS:

MIDDLE RING — MANUFACTURES STD
FOLLOWER — " "
BOLTS — " "
NUTS — " "
GASKET — " "

3. PAINT OR COATING:

MIDDLE RING INSIDE — COAL TAR EPOXY 16 MILS MIN BITUMASTIC 300-M OR 16 MILS MIN. AMERCOAT #78
MIDDLE RING OUTSIDE — "
FOLLOWER — " "
BOLTS — CADMIUM PLATED ASTM A165
NUTS — " " "

NOTE: PIPE O. D. INCLUDES PAINT APPLIED TO PIPE END

Ameron PIPE PRODUCTS GROUP

RUSSIAN RIVER - CONTRACT #3

SYMBOL	REVISION	DATE	BY	APPV'D

DRAWN	KW	12-8-75
CHECKED		
APPV'D		

FLANGED COUPLING ADAPTERS

2265

60-4-102.311.80 LBAD

1000-1004 (8/70)

185

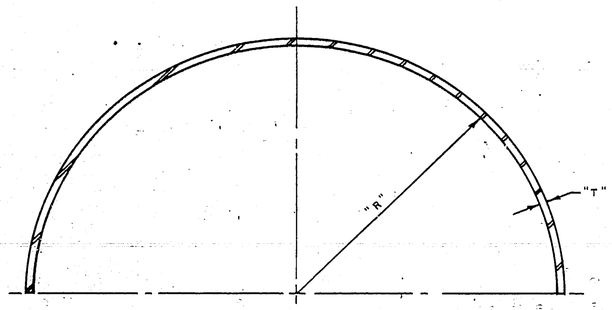

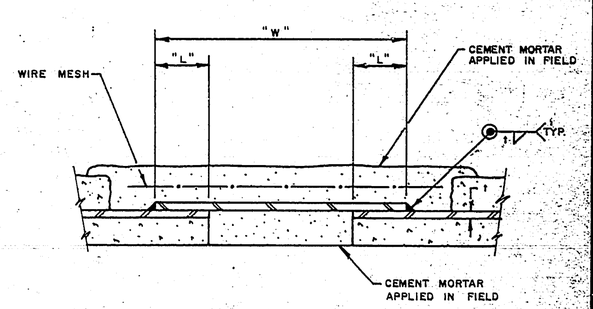

PIPE SIZE	MAT'L LIST NO.	QUANTITY HALF B.S.	"T"	"W"	"R"	CUT LENGTH	"L"
24		2	1/4	6	12.88	40.84	2
33		2	1/4	6	17.44	55.17	2
48		2	1/4	6	24.94	78.74"	2

Ameron PIPE PRODUCTS GROUP

RUSSIAN RIVER - CONTRACT #3

SYMBOL	REVISION	DATE	BY	APPV'D.

DRAWN	LW	12-8-75
CHECKED		
APPV'D.		

2265

60-4-102.311.81

B5.0

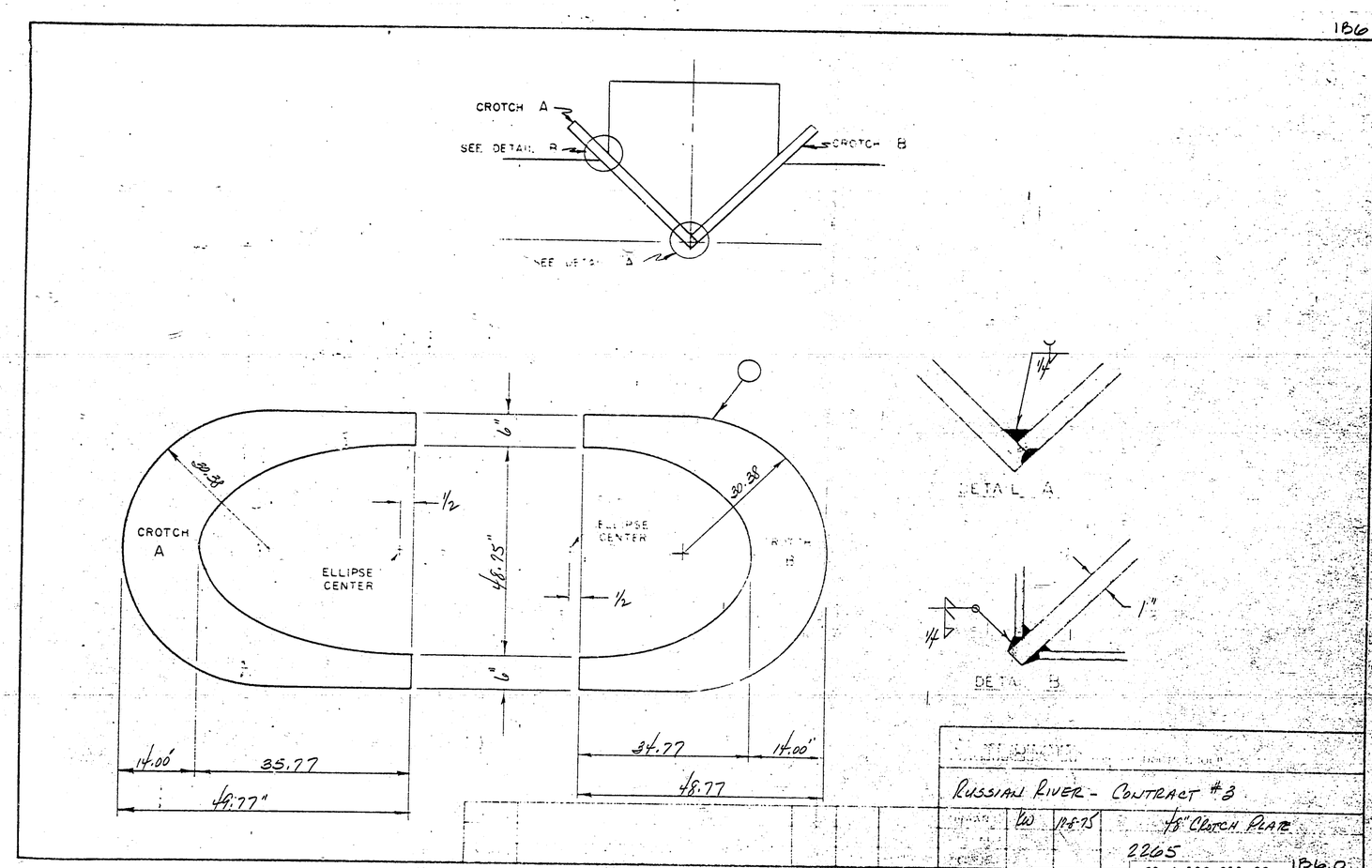
1B6
CROTCH A
SEE DETAIL B
CROTCH B
SEE DETAIL A
CROTCH A
ELLIPSE CENTER
ELLIPSE CENTER
CROTCH B
30.38
30.38
1/2
1/2
6"
6"
48.75"
14.00"
35.77
49.77"
34.77
14.00"
48.77
1/4
DETAIL A
1/4
1"
DETAIL B
RUSSIAN RIVER - CONTRACT #3
KW
12-8-75
48" CROTCH PLATE
2265
60-4-102.311.82
1B6.0

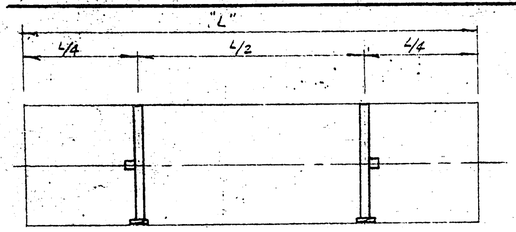

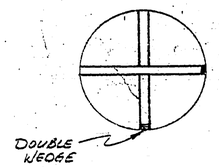

SHORING DETAIL 39" & UNDER

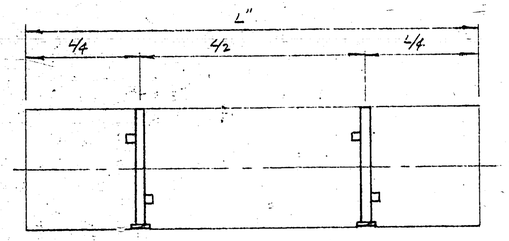

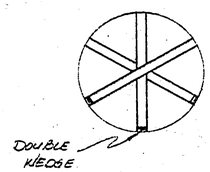

SHORING DETAIL 42" & GREATER

STULLS 2"x 4" UTILITY GRADE

PIPE DIAMETER	QUANTITY	LENGTH	MAT'L LIST NO.
48"	11,000	47	
33"	6	32	

WEDGES 2"x4"x8"

QUANTITY	MAT'L LIST NO.
22012	

Ameron PIPE PRODUCTS GROUP

RUSSIAN RIVER - COTATI INTERTIE PROJECT

SYMBOL	REVISION	DATE	BY	APPV'D.			
					DRAWN	LW	12-8-75
					CHECKED		
					APPV'D.		

2265

60-4-102.311.83

1000-1004 (8/70)

OFFICE 1L1

CONTRACT DRAWING REFERENCE	PIPE SIZE TYPE AND CLASS (JOINT DETAIL) REFERENCE	BID ITEM BILLING	UNIT LENGTH	PIECE NO.	NO. REQ'D	DESCRIPTION	DETAIL DWG. REF.	SLOPE HORIZ.	DIST.	PLAN LOOKING IN DIRECTION OF LAYING	I.L.V. STATION—READ UP	PULL, BEVEL OR TURN	I.L.V. ELEVATION	SLOPE TANGENT COSINE	PROFILE NOTE: VIEW FROM RIGHT SIDE OF PIPE
				13	1	STD	5	41.00 40.96		CONTINUED ON 1L2	108+90.48		101.20		
				12	1	SPC BEVEL SECTION	1F2	40.91 40.88			109+31.45		102.90	-2°24' .041790 999128	
				11 10	2	STD	5	82.00 81.98			109+72.32	BEV 1°16'dn	104.60		
				9	1	SPC W/ 2" AIR VALVE	1F10	41.00 40.99		AIR VALVE TYPE C	110+54.31 110+90.00		106.20	-1°08' .019783 999804	
				8	1	STD	5	41.00 41.00			110+95.30	PULL 1°08'dn	107.00		
				7	1	SPC W/ LAP WELD SPIGOT	1F9B	40.69 40.69			111+36.30 111+46.50		107.00		
				6	1	SPC W/ 1/4" TAP IN BELL - LAP WELD JT. PLUG (155)	1F9A	41.00 41.00		CASING BY OTHERS	111+76.99		107.00		
				5	1	SPC SHORT SECTION - LAP WELD JT.	1F9	24.10 24.10			112+13.50 112+17.99		107.00		
				4	1	SPC W/ 2" AIR VALVE - LAP WELD JT.	1F7A	41.00 41.00		AIR VALVE TYPE C	112+42.09 112+75.00		107.00		
				3	1	4-CUT ELBOW LAP WELD JT	1F7	6.44 6.44			112+83.09		107.00		
								36.54 36.54			112+89.53	H Δ 92°28'lt	107.00		
				2 2A	1	SPC - W/ CONCENTRIC REDUCER, BUTTSTRAP END, & 24" OUTLET W/ BUTTSTRAP & FLEX END BUTTSTRAP (123) *(1) FLG. CPLG. ADAPT. (121)	1F5 1F6	(36.15) 34.09 34.09		24" LIne A FIELD CLOSURE CONTRACTOR TO CUT PIPE TO REQUIRED LENGTH	113+26.07 113+39.16 P.C.A. 113+43.66		107.00		
				1 1A	1	2-CUT ELBOW W/ 18" MANHOLE, CONCENTRIC REDUCER, & FLEX END X BUTTSTRAP END BUTTSTRAP (124) *(1) FLG. CPLG. ADAPT. (120)	F-4 1F4B	4.80 4.50 17.34 17.34		CONCENTRIC REDUCER	113+60.16		107.60		
										18" M.H.	113+64.66 113+75.00	H Δ 45°00'rt	107.60		
										CONCENTRIC REDUCER P.C.A.	113+82.00		107.80	+0.00' .000000 1.000000	
						GASKET (117) NUTS (112) BOLTS (113)				CONTINUED FROM					

DRAWING NO. 60-4-102.306

48 SC 260 *(1) (240) — 10 Δ

48 SC 480 (240) — 1/4, 12"

48 SC 260 (240) — 2 Δ

48 SC 260 (240) — 1 Δ

33" (L 220' HD.) — 10 Δ

20' (L 220' HD.)

(1) * FLG CPLG. ADAPTER W/ STUDS & NUTS

(2) * 48 SC 260 / (240) = PIPE CLASS / F.T. OF HD. SHOWN ON CONTRACT DRAWINGS

LAYOUT DRAWING
STATION 113+82.00± TO STATION 108+90.48

SYMBOL	REVISION	DATE	BY	APPV'D.
	CHANGED PG NO. FROM 1F4B, 1F7A, 1F9A, 1F9B			
1	REVISED LAYOUT PG. 2 OF 1 LAP WELD	1/16/76	CLL	

DRAWN CLL 11/6/75 CONTRACT NO. 3
CHECKED
APPV'D.

~~2265~~ 2314

60-4-102.311.9

1000-1003 (7/75)

APPROVED
Project 76 Cap 04-457-1
By: [illegible] Date: 2-3-76
SONOMA COUNTY WATER AGENCY

JAN 28 1976

APPROVED
JAN 27 1976

RECEIVED
JAN 29 1976
SONOMA COUNTY WATER AGENCY

Ameron UTILITY PRODUCTS GROUP

RUSSIAN RIVER - COTATI INTERTIE PROJECT

LAP WELD JTS BOTH ENDS WELL AROUND

SONOMA COUNTY WATER AGENCY

RUSSIAN RIVER-COTATI INTERTIE PROJECT

PIPELINE CONTRACT NO. 3

COTATI RESERVOIR TO PETALUMA AQUEDUCT

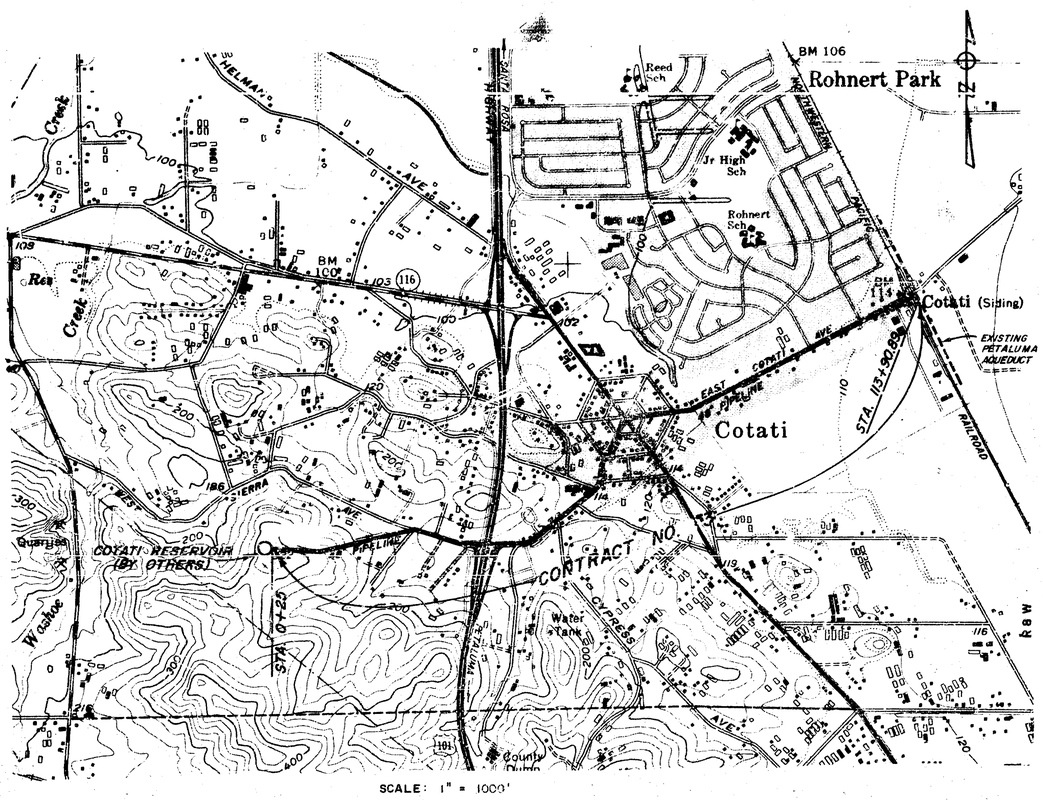

SCALE: 1" = 1000'

GENERAL NOTES

1. ELEVATIONS SHOWN ARE IN FEET & DECIMALS THEREOF ABOVE N.G.S. M.S.L.
2. STATIONS SHOWN ON PLAN & PROFILE ARE HORIZONTAL DISTANCES UNLESS OTHERWISE NOTED.
3. ALL STATIONS, GRADES & ELEVATION ARE SUBJECT TO REVISION TO SUIT FIELD CONDITIONS.
4. AERIAL PHOTOS TAKEN MAY 5, 1971
5. DRAWINGS ARE DESIGNATED BY THEIR LAST THREE DIGITS, e.g., DRAWING NO. 60-4-102.201 IS REFERRED TO AS DRAWING NO 201, ETC.

LEGEND

FACILITIES TO BE CONSTRUCTED

CENTERLINE OF RIGHT OF WAY
ELECTROLYSIS TEST STATION (ES 2P)
GALVANIC ANODE (GA A)
PRE = PERMANENT REFERENCE ELECTRODE
VEGETATION
EROSION CONTROL
PERMANENT PASTURE REESTABLISHMENT
INSULATION FLANGE
HIGH PRESSURE PIPELINE WARNING SIGN
MANHOLE
MAINLINE VALVE
AIR VALVE
PRESSURE RELIEF VALVE
TURNOUT
BLOWOFF
BLIND TEE OR LATERAL
AIR VALVE AROUND MAINLINE VALVE
FIELD GATE ON ℄ OF R/W
CLASS OF BEDDING & BACKFILL DESIGNATION PER DWG. NO. WA-7
SPECIFIC PIPE ELEVATIONS SHOWN ON PIPE PROFILE ARE FOR OUTSIDE TOP OF PIPE.

EXISTING FACILITIES

GAS LINE — G —
SANITARY SEWER — SS —
WATER LINE — 6"W —
TELEVISION CABLE — TV —
ELECTRIC CABLE — E —
TELEPHONE CABLE — ▲ —
FENCE — x — x —
PROPERTY LINE — ℞ —
POWER AND/OR TELEPHONE CABLE & GUY

OTHER INFORMATION

SOIL SAMPLE LOCATION (7)
SURVEY CONTROL POINT (A-37)
REFERENCE POINTS FOR LOCATING R/W CENTERLINE — RP NAIL IN POST, 13.12', 12.63', RP NAIL IN POST; 65+64.18 HORIZ.
RIGHT OF WAY & CONSTRUCTION EASEMENT — R/W, 25', ℄, 25', R/W; 25' CONSTRUCTION EASEMENT
UNLESS INDICATED OR DIRECTED OTHERWISE, PIPE ℄ SHALL BE ON R/W ℄

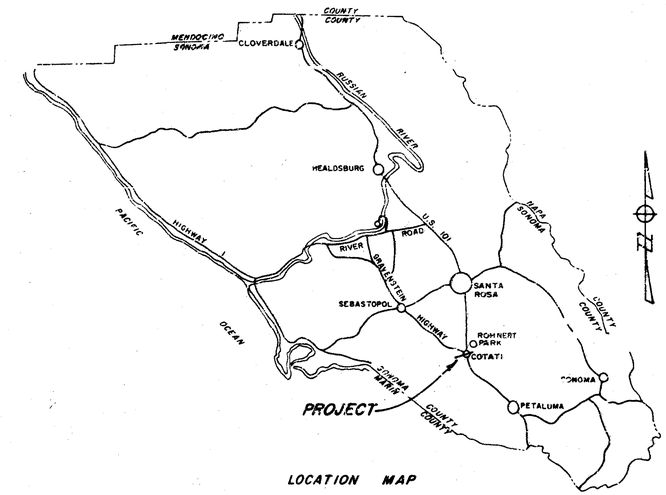

LOCATION MAP

INDEX TO DRAWINGS

SHT. NO.	DRAWING NO.	TITLE
1	60-4-102.301	LOCATION MAP & INDEX TO DRAWINGS
2	102.302	HYDRAULIC GRADE LINE.
3	102.303	PLAN & PROFILE - STA. 0+25 TO STA. 28+32
4	102.304	STA. 28+32 TO STA. 55+55
5	102.305	STA. 55+55 TO STA. 84+74
6	102.306	STA. 84+74 TO STA. 113+82 ±
7	102.307	RESERVOIR CONNECTION, LOG OF BORINGS & THRUST WELDS
8	102.308	BEDDING, BACKFILL & LAGUNA CROSSING
9	102.309	RAILROAD XING & PETALUMA AQUEDUCT CONNECTION
10	102.310	MISCELLANEOUS DETAILS
11	WA-1	GALVANIC ANODES AND ELECTROLYSIS TEST STATIONS
12	WA-2	DISTRIBUTION TURNOUT TYPE A AND TYPE B
13	WA-3	MAIN LINE VALVE TYPE A & B
14	WA-5	AIR VALVE INSTALLATION TYPE A, B & C
15	WA-8	HIGH PRESSURE PIPELINE WARNING SIGN

UTILITY NOTES

THE AGENCY HAS, TO THE BEST OF ITS ABILITY, DELINEATED ON THE DRAWINGS UTILITY INSTALLATIONS TO BE ENCOUNTERED WITHIN THE LIMITS OF THE WORK. SUCH INFORMATION IS BASED UPON INFORMATION FURNISHED TO THE AGENCY BY THE UTILITY OWNERS, AND THE AGENCY, EITHER EXPRESSLY OR BY IMPLICATION, DOES NOT GUARANTEE THAT UTILITY INSTALLATIONS WILL BE FOUND AT THE LOCATIONS OR DEPTHS INDICATED. THE AGENCY ASSUMES NO RESPONSIBILITY FOR THE ACCURACY OF THE INFORMATION SHOWN OR FOR THE INADVERTENT OMISSION OF ANY SUCH INFORMATION. PROFILES DO NOT SHOW ALL UTILITY SERVICE LATERALS.

No.	DATE	REVISION	By
		AS BUILT Date 5-16-77	

RUSSIAN RIVER - COTATI INTERTIE PROJECT
COTATI RESERVOIR TO PETALUMA AQUEDUCT
LOCATION MAP & INDEX TO DRAWINGS

SCALE: AS SHOWN | APPROVED CHIEF ENGINEER | DRAWN: S.F.M.
DATE: JULY 1, 1975 | RE 8271 | CHECKED: S.U.

SONOMA COUNTY WATER AGENCY

DESIGNED: T.P. Rudkin | SUBMITTED | DRAWING NUMBER: 60-4-102.301

SHEET NO.

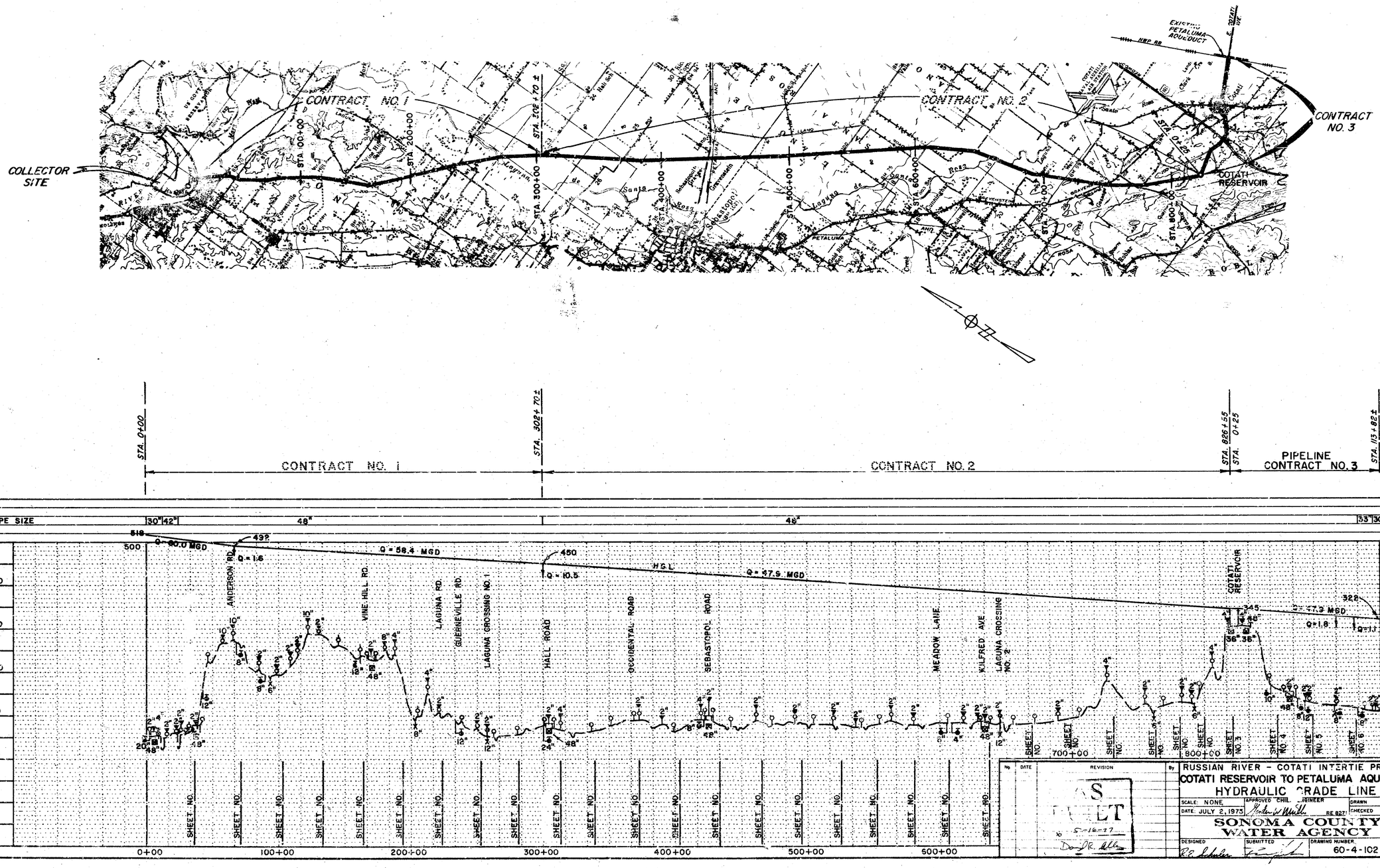
CONTRACT NO. 1
CONTRACT NO. 2
CONTRACT NO. 3
COLLECTOR SITE
COTATI RESERVOIR
EXISTING PETALUMA AQUEDUCT
STA. 0+00
STA. 100+00
STA. 200+00
STA. 302+70±
STA. 300+00
STA. 400+00
STA. 500+00
STA. 600+00
STA. 700+00
STA. 800+00
STA. 826+55
STA. 0+25
STA. 113+82±
PIPELINE CONTRACT NO. 3
PETALUMA AQUEDUCT
PIPE SIZE
30"|42"
48"
48"
33"|30"
Q = 90.0 MGD
Q = 58.4 MGD
Q = 57.9 MGD
Q = 77.3 MGD
Q = 1.6
Q = 10.5
Q = 1.8
Q = 1.1
HGL
518
500
492
450
345
328
ANDERSON RD.
VINE HILL RD.
LAGUNA RD.
GUERNEVILLE RD.
LAGUNA CROSSING NO. 1
HALL ROAD
OCCIDENTAL ROAD
SEBASTOPOL ROAD
MEADOW LANE
KILFRED AVE.
LAGUNA CROSSING NO. 2
COTATI RESERVOIR
SHEET NO.
0+00
100+00
200+00
300+00
400+00
500+00
600+00
700+00
800+00
RUSSIAN RIVER - COTATI INTERTIE PROJECT
COTATI RESERVOIR TO PETALUMA AQUEDUCT
HYDRAULIC GRADE LINE
SCALE: NONE
DATE: JULY 2, 1975
APPROVED CHIEF ENGINEER
RE 827
DRAWN
CHECKED
SONOMA COUNTY WATER AGENCY
DESIGNED
SUBMITTED
DRAWING NUMBER
60-4-102.302
REVISION
DATE
No.
5-16-77

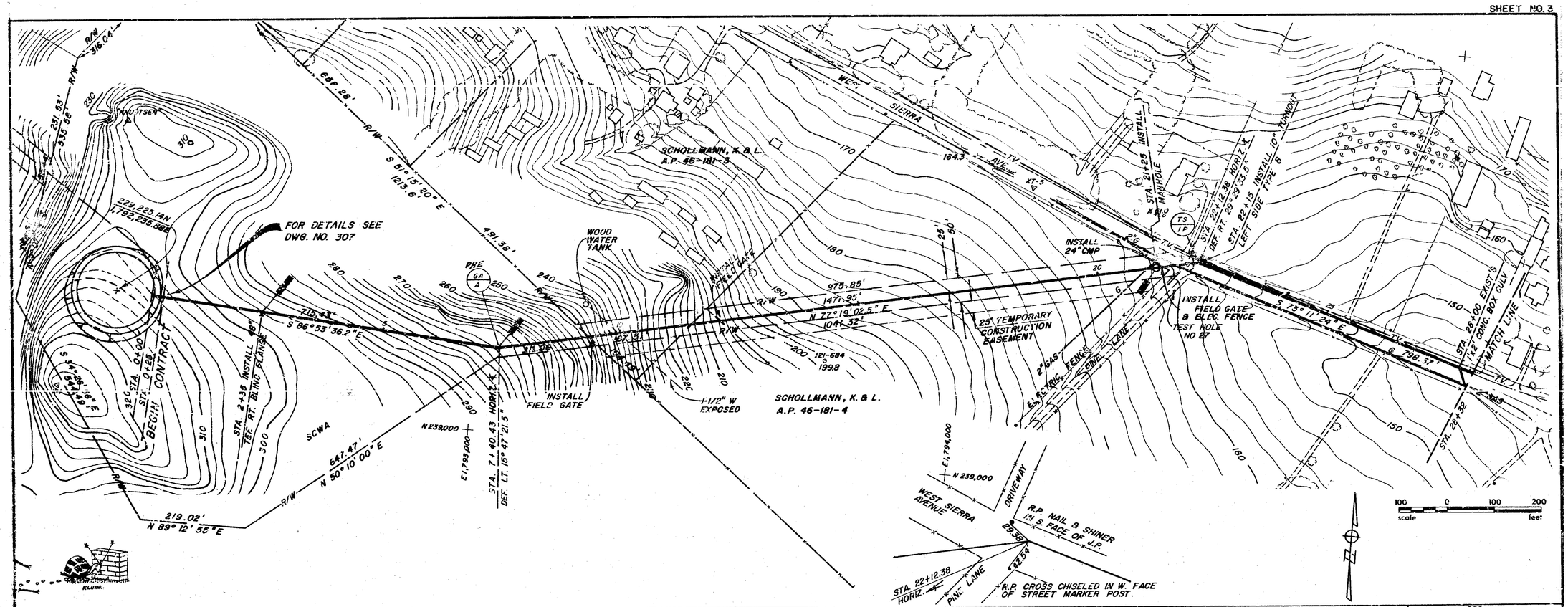

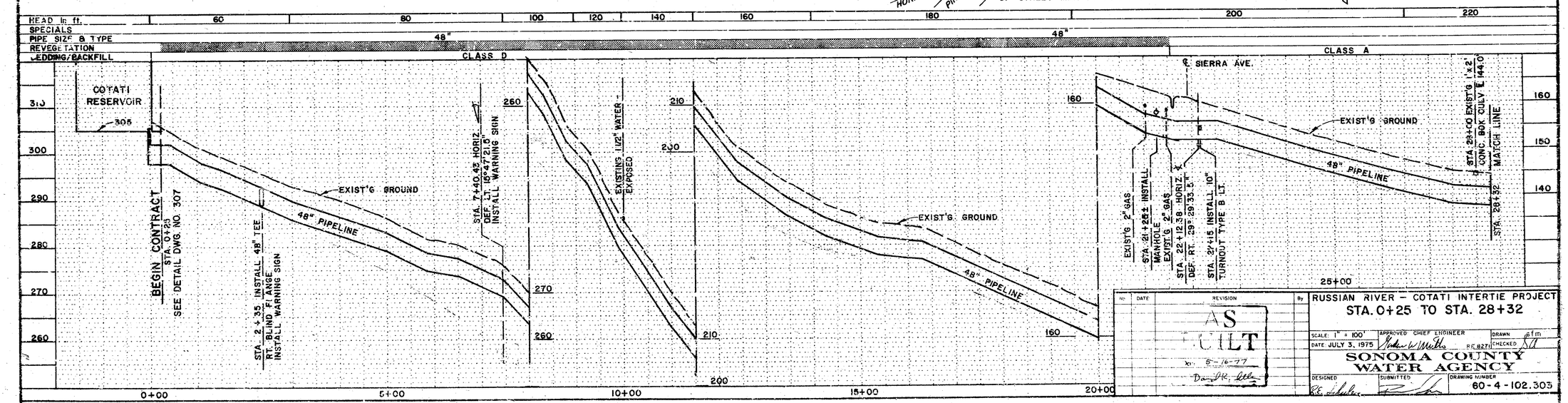

No.	DATE	REVISION	By
		AS BUILT 5-16-77	

RUSSIAN RIVER – COTATI INTERTIE PROJECT
STA. 0+25 TO STA. 28+32

SCALE: 1" = 100'
DATE JULY 3, 1975
APPROVED CHIEF ENGINEER
DRAWN
CHECKED

SONOMA COUNTY WATER AGENCY

DESIGNED
SUBMITTED
DRAWING NUMBER 60-4-102.303

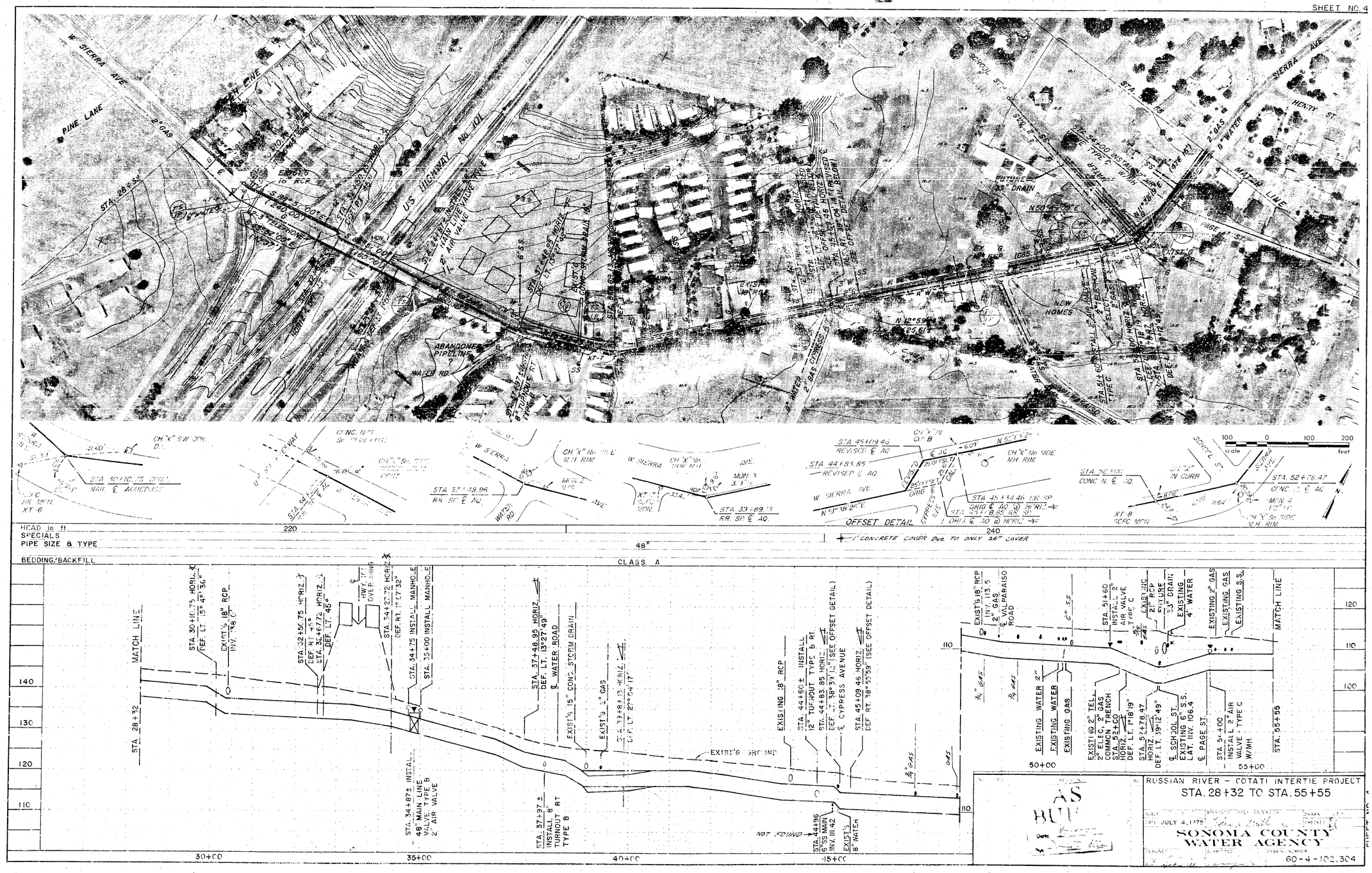

RUSSIAN RIVER – COTATI INTERTIE PROJECT

STA. 28+32 TO STA. 55+55

AS BUILT

DATE JULY 4, 1975

SONOMA COUNTY WATER AGENCY

60-4-102.304

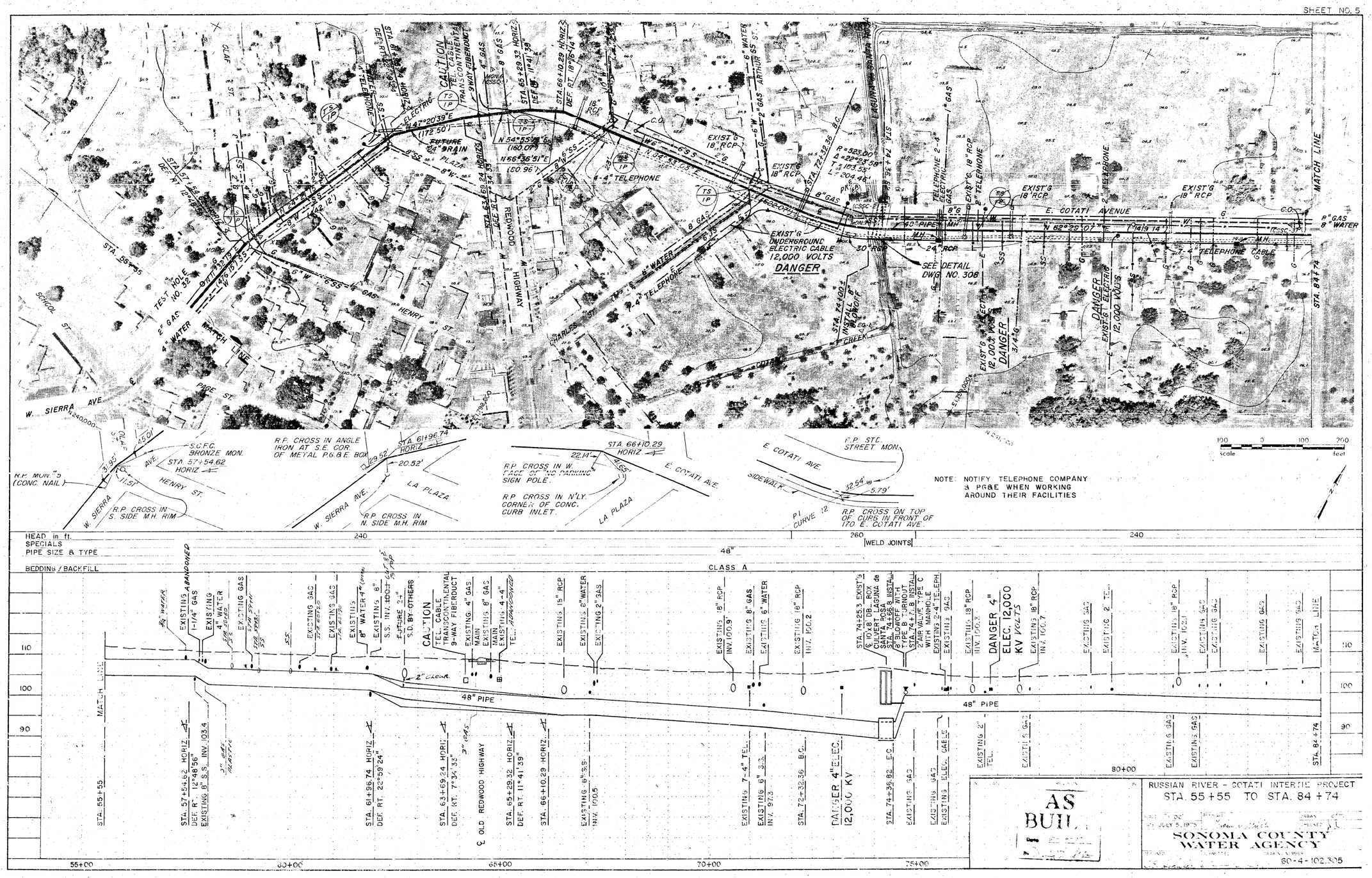
SHEET NO. 5
CAUTION
TEL. CABLE
TRANSCONTINENTAL
9-WAY FIBERDUCT
FUTURE 24" DRAIN
4-4" TELEPHONE
EXIST'G 18" RCP
EXIST'G UNDERGROUND ELECTRIC CABLE 12,000 VOLTS
DANGER
SEE DETAIL DWG. NO. 308
E. COTATI AVENUE
MATCH LINE
REDWOOD HIGHWAY
HENRY ST.
W. SIERRA AVE.
PAGE ST.
SCHOOL ST.
TEST HOLE NO. 32
R.P. CROSS IN ANGLE IRON AT S.E. COR. OF METAL P.G.&E. BOX
R.P. CROSS IN W. FACE OF "NO PARKING" SIGN POLE.
R.P. CROSS IN N'LY. CORNER OF CONC. CURB INLET.
R.P. CROSS IN S. SIDE M.H. RIM
R.P. CROSS IN N. SIDE M.H. RIM
R.P. STD. STREET MON.
R.P. CROSS ON TOP OF CURB IN FRONT OF 170 E. COTATI AVE.
LA PLAZA
E. COTATI AVE.
SIDEWALK
NOTE: NOTIFY TELEPHONE COMPANY & PG&E WHEN WORKING AROUND THEIR FACILITIES
HEAD in ft.
SPECIALS
PIPE SIZE & TYPE
BEDDING / BACKFILL
WELD JOINTS
CLASS A
48" PIPE
DANGER 4" ELEC. 12,000 KV
DANGER 4" ELEC. 12,000 KV VOLTS
MATCH LINE
STA. 55+55
STA. 57+54.62 HORIZ. DEF. RT. 12°48'56" EXISTING 8" S.S. INV. 103.4
STA. 61+96.74 HORIZ. DEF. RT. 22°59'24"
STA. 63+69.24 HORIZ. DEF. RT. 7°34'33"
℄ OLD REDWOOD HIGHWAY
STA. 65+29.32 HORIZ. DEF. RT. 11°41'39"
STA. 66+10.29 HORIZ.
EXISTING 6" S.S. INV. 100.5
EXISTING 7-4" TEL.
EXISTING 6" S.S. INV. 97.3
STA. 72+32.36 B.C.
STA. 74+36.82 E.C.
EXISTING GAS
EXISTING ELEC. CABLE
EXISTING 2" TEL.
STA. 84+74
55+00
60+00
65+00
70+00
75+00
80+00
AS BUILT
RUSSIAN RIVER - COTATI INTERTIE PROJECT
STA. 55+55 TO STA. 84+74
JULY 5, 1975
SONOMA COUNTY WATER AGENCY
60-4-102.305

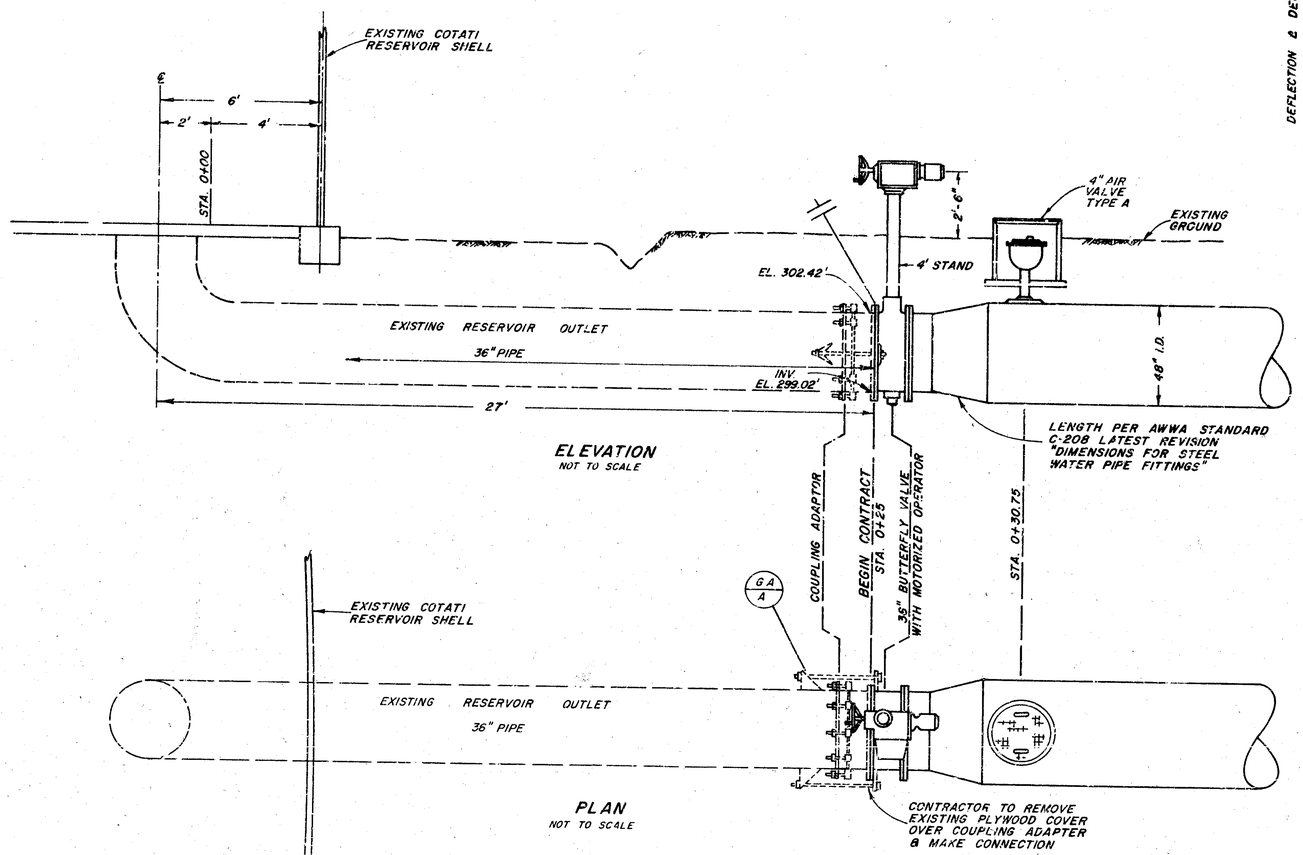

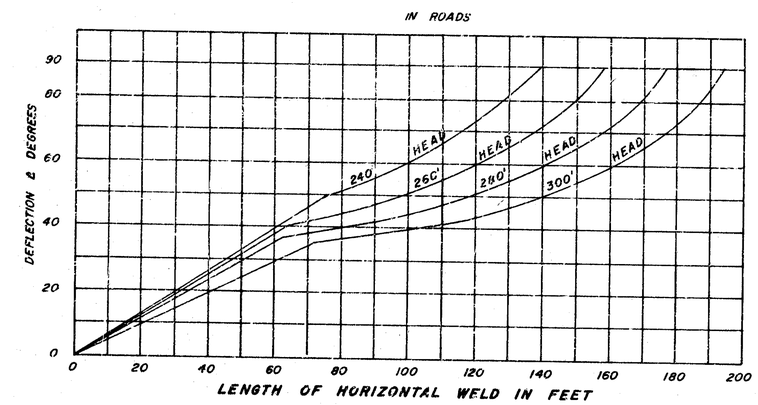

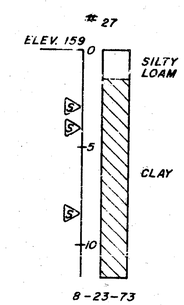

PINE LANE & WEST SIERRA

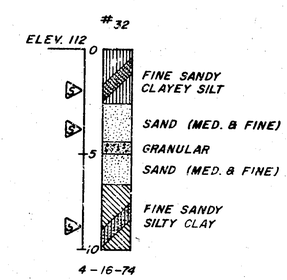

WEST SIERRA
(STA. 56+00)

▷ DENOTES SAMPLING DEPTHS

No.	DATE	REVISION	By
		AS BUILT 5-16-77	

RUSSIAN RIVER-COTATI INTERTIE PROJECT
RESERVOIR CONNECTION, LOG OF BORINGS & THRUST WELDS

SCALE: NO SCALE | APPROVED CHIEF ENGINEER | DRAWN S.T.M.
DATE: JULY 7, 1975 | RE 8271 | CHECKED

SONOMA COUNTY WATER AGENCY

DESIGNED: R.E. Schulz | SUBMITTED | DRAWING NUMBER 60-4-102.307

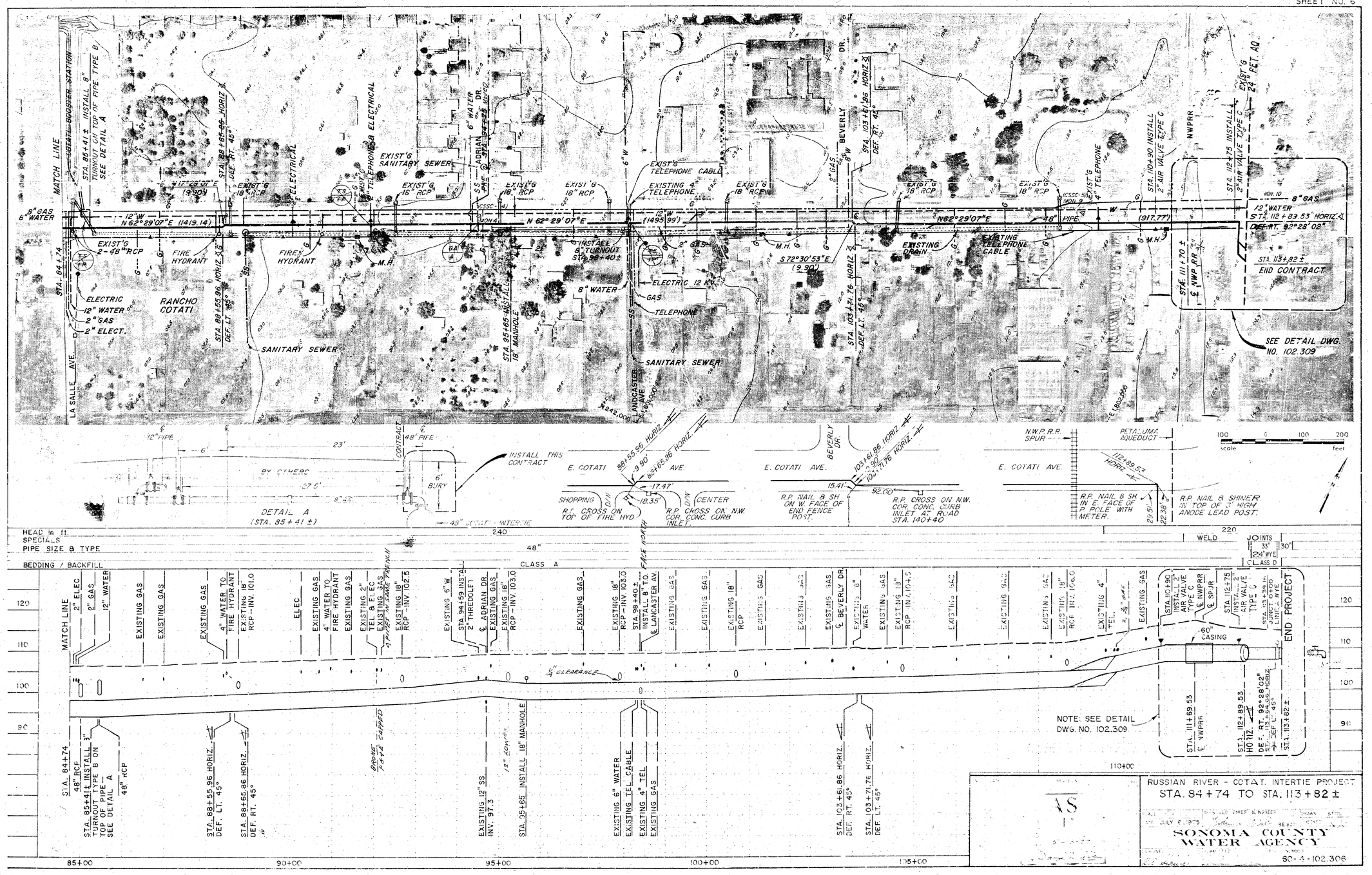
MATCH LINE
COTATI-BOOSTER STATION
STA. 85+41± INSTALL 8" TURNOUT ON TOP OF PIPE TYPE B SEE DETAIL A
STA. 84+74
LA SALLE AVE.
ELECTRIC
12" WATER
2" GAS
2" ELECT.
RANCHO COTATI
EXIST'G 2-48" RCP
FIRE HYDRANT
SANITARY SEWER
EXIST'G SANITARY SEWER
EXIST'G 16" RCP
EXIST'G 18" RCP
ELECTRICAL
TELEPHONE
6" WATER
ADRIAN DR.
STA. 95+65 INSTALL 18" MANHOLE
8" WATER
INSTALL 8" TURNOUT STA. 98+40±
EXIST'G TELEPHONE CABLE
EXISTING 4" TELEPHONE
N 62° 29' 07" E
S 72° 30' 53" E
ELECTRIC 12 KV
GAS
TELEPHONE
LANCASTER AVE.
BEVERLY DR.
STA. 103+61.86 HORIZ.
DEF. LT. 45°
EXISTING DRAIN
EXISTING TELEPHONE CABLE
STA. 104+90 INSTALL 2" AIR VALVE TYPE C
NWPRR
STA. 112+75 INSTALL 2" AIR VALVE TYPE C
EXIST'G 24" PET. AQ.
8" GAS
12" WATER
STA. 112+83.53 HORIZ.
DEF. RT. 92°28'02"
STA. 113+82±
END CONTRACT
SEE DETAIL DWG. NO. 102.309
STA. 111+70±
℄ NWP RR
N.W.P. R.R. SPUR
PETALUMA AQUEDUCT
E. COTATI AVE.
SHOPPING CENTER
R.P. CROSS ON TOP OF FIRE HYD.
R.P. CROSS ON N.W. COR. CONC. CURB INLET.
R.P. NAIL & SH ON W. FACE OF END FENCE POST.
R.P. CROSS ON N.W. COR. CONC. CURB INLET AT ROAD STA. 1+40
R.P. NAIL & SH IN E. FACE OF P. POLE WITH METER.
R.P. NAIL & SHINER IN TOP OF 3" HIGH ANODE LEAD POST.
DETAIL A (STA. 85+41±)
12" PIPE
48" PIPE
BY OTHERS
6' BURY
INSTALL THIS CONTRACT
45° COTATI INTERTIE
HEAD in ft.
SPECIALS
PIPE SIZE & TYPE
BEDDING / BACKFILL
CLASS A
WELD
JOINTS
24" WYE
CLASS D
END PROJECT
60" CASING
NOTE: SEE DETAIL DWG. NO. 102.309
STA. 84+74 48" RCP
STA. 85+41± INSTALL 3" TURNOUT TYPE B ON TOP OF PIPE SEE DETAIL A
48" RCP
STA. 88+55.96 HORIZ. DEF. LT. 45°
STA. 89+65.86 HORIZ. DEF. RT. 45°
EXISTING 12" SS INV. 97.3
STA. 95+65 INSTALL 18" MANHOLE
EXISTING 6" WATER
EXISTING TEL. CABLE
EXISTING 4" TEL.
EXISTING GAS
STA. 103+61.86 HORIZ. DEF. RT. 45°
STA. 103+71.76 HORIZ. DEF. LT. 45°
85+00
90+00
95+00
100+00
105+00
110+00
RUSSIAN RIVER - COTAT. INTERTIE PROJECT
STA. 84+74 TO STA. 113+82±
JULY 6, 1975
SONOMA COUNTY WATER AGENCY
60-4-102.306

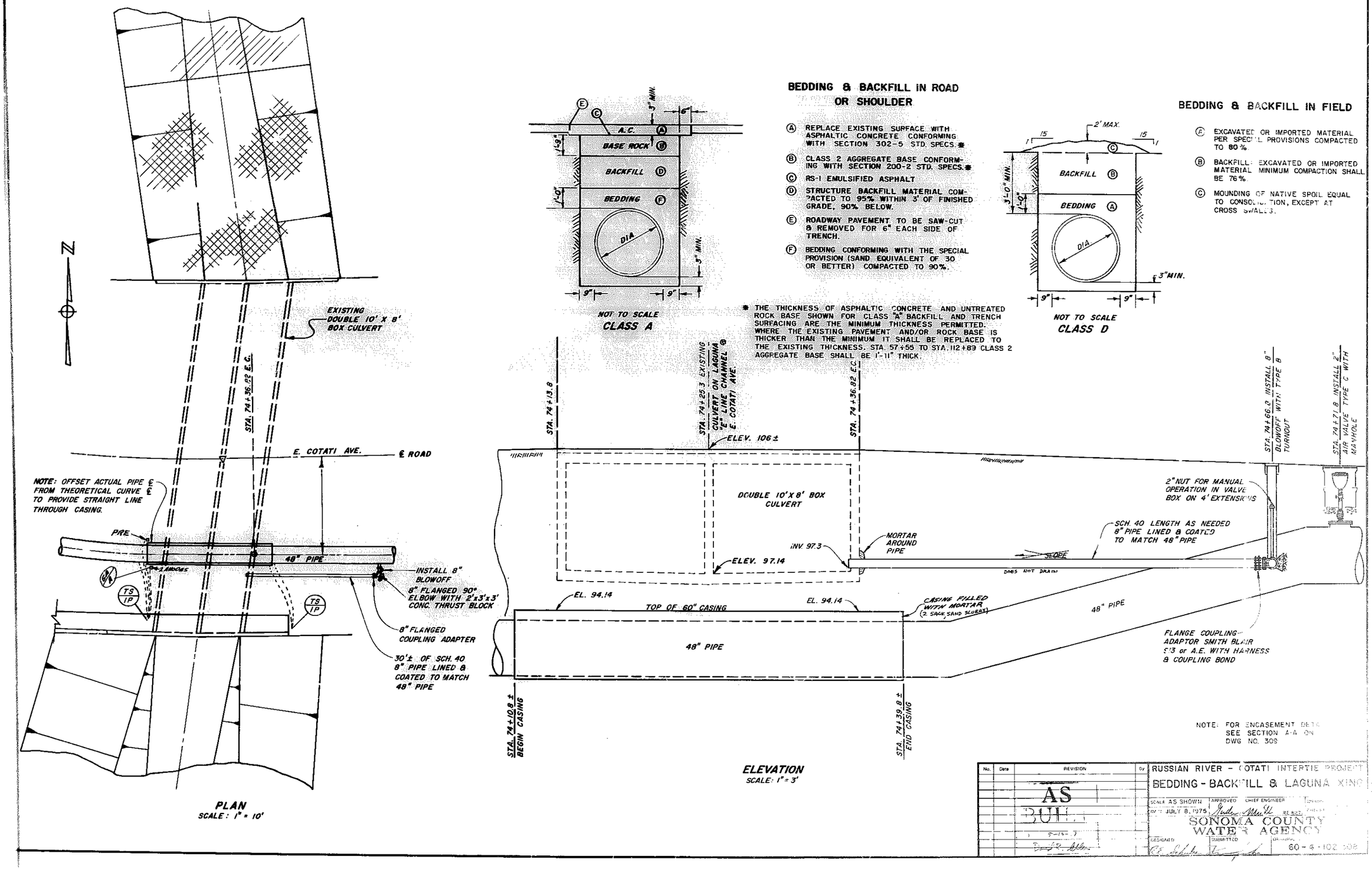

BEDDING & BACKFILL IN ROAD OR SHOULDER

(A) REPLACE EXISTING SURFACE WITH ASPHALTIC CONCRETE CONFORMING WITH SECTION 302-5 STD. SPECS.*

(B) CLASS 2 AGGREGATE BASE CONFORMING WITH SECTION 200-2 STD. SPECS.*

(C) RS-1 EMULSIFIED ASPHALT

(D) STRUCTURE BACKFILL MATERIAL COMPACTED TO 95% WITHIN 3' OF FINISHED GRADE, 90% BELOW.

(E) ROADWAY PAVEMENT TO BE SAW-CUT & REMOVED FOR 6" EACH SIDE OF TRENCH.

(F) BEDDING CONFORMING WITH THE SPECIAL PROVISION (SAND EQUIVALENT OF 30 OR BETTER) COMPACTED TO 90%.

* THE THICKNESS OF ASPHALTIC CONCRETE AND UNTREATED ROCK BASE SHOWN FOR CLASS "A" BACKFILL AND TRENCH SURFACING ARE THE MINIMUM THICKNESS PERMITTED. WHERE THE EXISTING PAVEMENT AND/OR ROCK BASE IS THICKER THAN THE MINIMUM IT SHALL BE REPLACED TO THE EXISTING THICKNESS. STA. 57+55 TO STA. 112+89 CLASS 2 AGGREGATE BASE SHALL BE 1'-11" THICK.

BEDDING & BACKFILL IN FIELD

(A) EXCAVATED OR IMPORTED MATERIAL PER SPECIAL PROVISIONS COMPACTED TO 80%.

(B) BACKFILL: EXCAVATED OR IMPORTED MATERIAL MINIMUM COMPACTION SHALL BE 76%.

(C) MOUNDING OF NATIVE SPOIL EQUAL TO CONSOLIDATION, EXCEPT AT CROSS SWALES.

NOTE: FOR ENCASEMENT DETAIL SEE SECTION A-A ON DWG NO. 309

No.	Date	REVISION	By
		AS BUILT	

RUSSIAN RIVER - COTATI INTERTIE PROJECT

BEDDING - BACKFILL & LAGUNA XING

SCALE AS SHOWN | APPROVED | CHIEF ENGINEER

DATE JULY 8, 1975

SONOMA COUNTY WATER AGENCY

DESIGNED | SUBMITTED | DRAWING 60-4-102 308

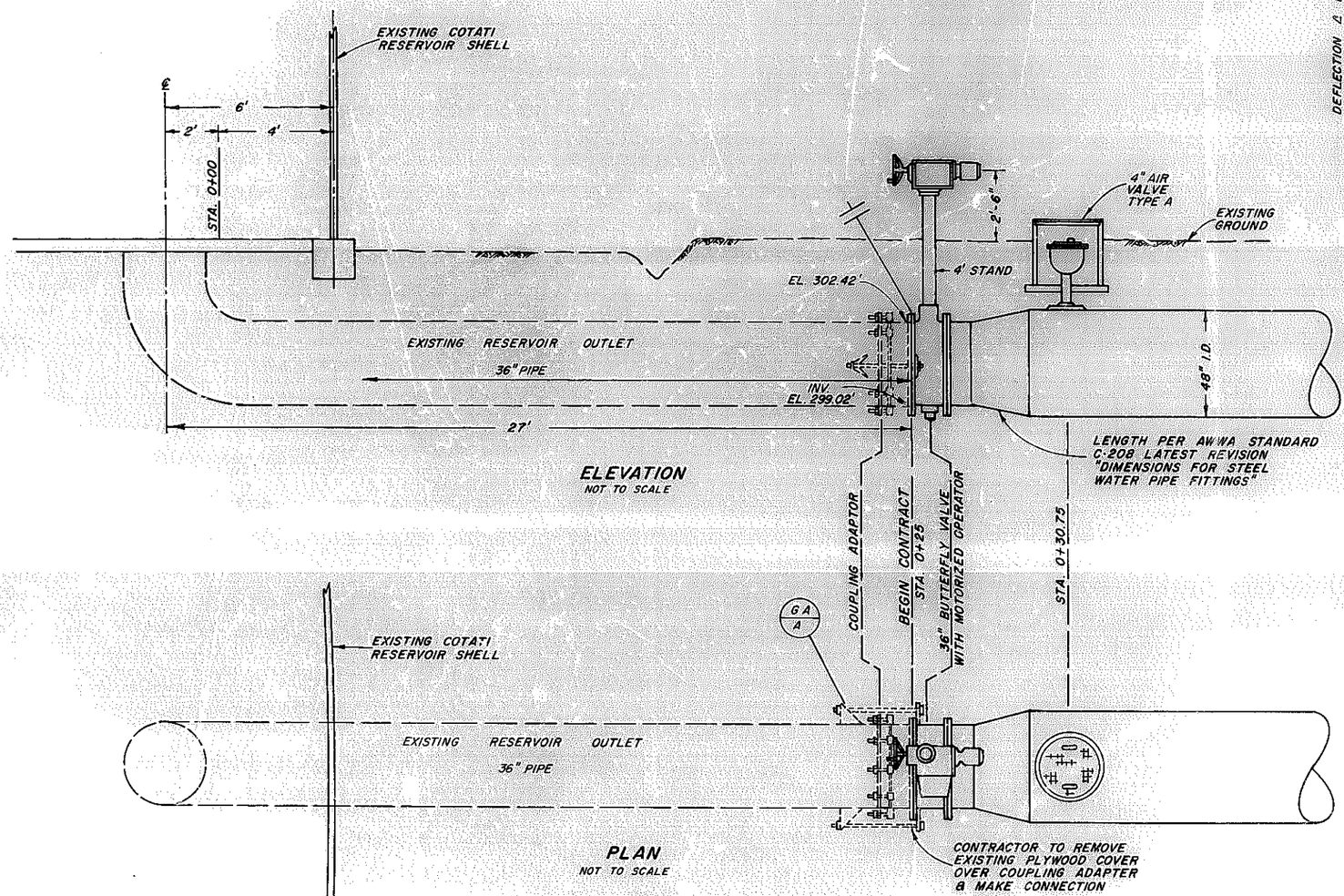

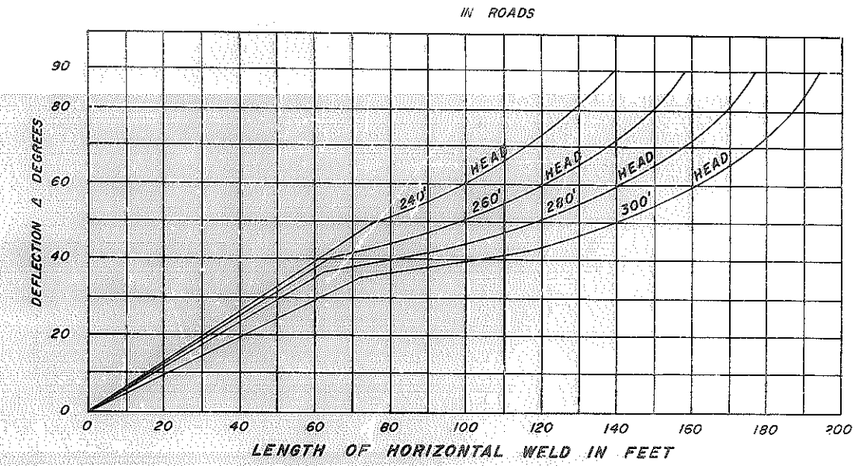

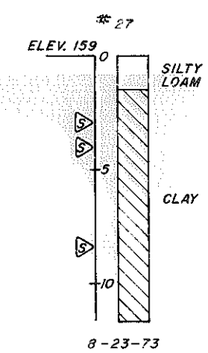

PINE LANE & WEST SIERRA

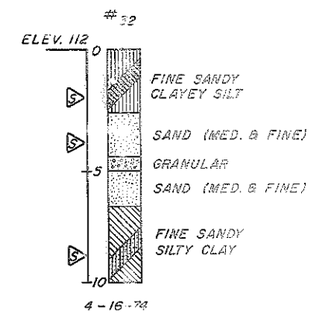

WEST SIERRA
(STA 56+00)

▷ DENOTES SAMPLING DEPTHS

No.	DATE	REVISION	By
		AS	
		5-16-77	

RUSSIAN RIVER-COTATI TRANSFER PROJECT
RESERVOIR CONNECTION LOG OF BORINGS & THRUST WELDS

SCALE NO SCALE
DATE JULY 7, 1975
APPROVED CHIEF ENGINEER

SONOMA COUNTY WATER AGENCY

DESIGNED
DRAWN
SUBMITTED

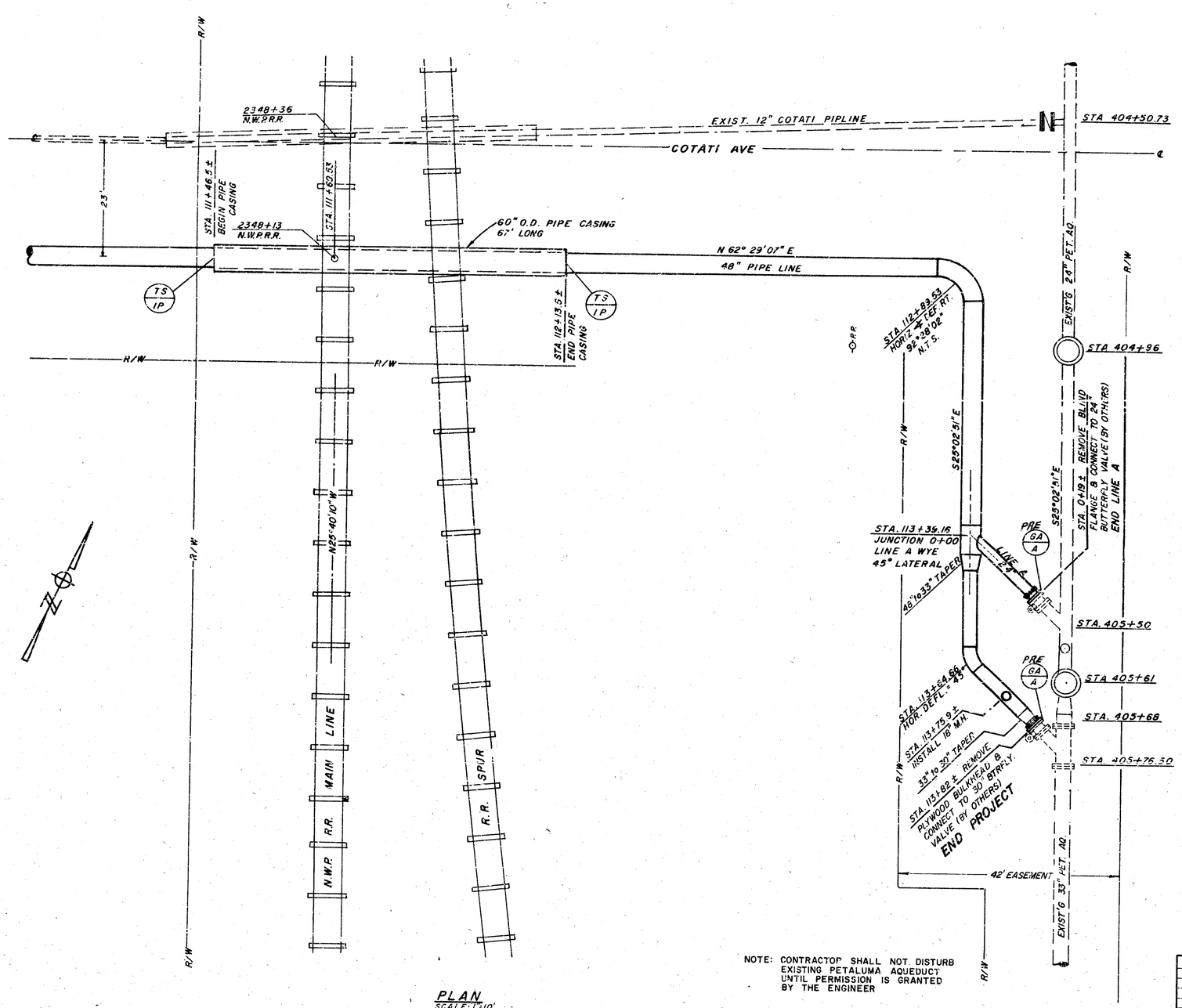

PLAN
SCALE: 1"=10'

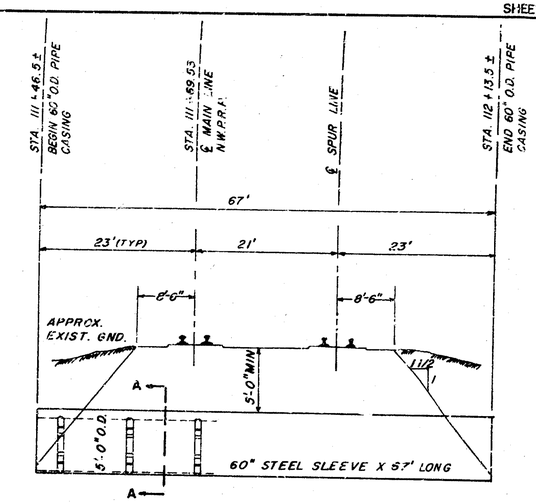

PIPE CASING PROFILE
HORIZ. SCALE: 1"=10'
VERT. SCALE: 1"=5'

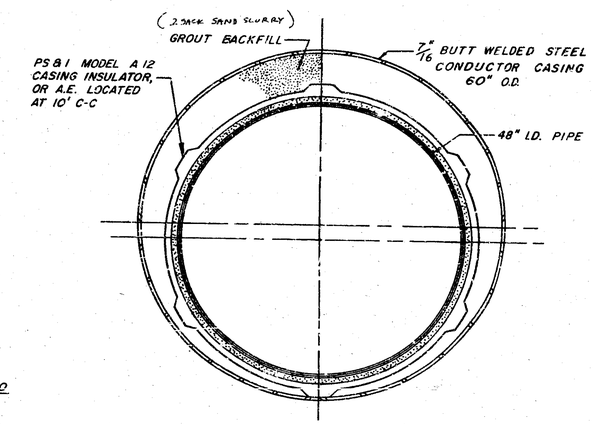

TYPICAL SECTION A-A
STEEL ENCASEMENT
NO SCALE

NOTE: ALL JOINTS OF PIPELINE WITHIN CASING SHALL BE WELDED

NOTE: CONTRACTOR SHALL NOT DISTURB EXISTING PETALUMA AQUEDUCT UNTIL PERMISSION IS GRANTED BY THE ENGINEER

No.	DATE	REVISION	By
		AS BUILT Date 5-16-77 By: Daniel R. Allen	

RUSSIAN RIVER – COTATI INTERTIE PROJECT

R.R. XING & PET. AQU. CONNECTION

SCALE: AS SHOWN
DATE: JULY 9, 1975
APPROVED: Jordan W. Miller, CHIEF ENGINEER
DRAWN: sfm
CHECKED: [illegible]

SONOMA COUNTY WATER AGENCY

DESIGNED: R.E. Schuler
SUBMITTED: [illegible]
DRAWING NUMBER: 60-4-102.309

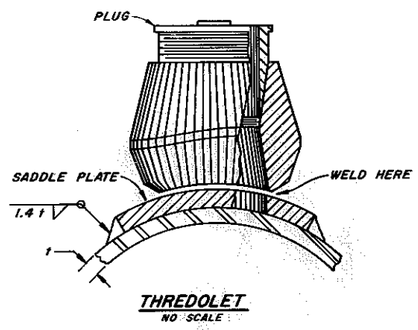

THREDOLET
NO SCALE

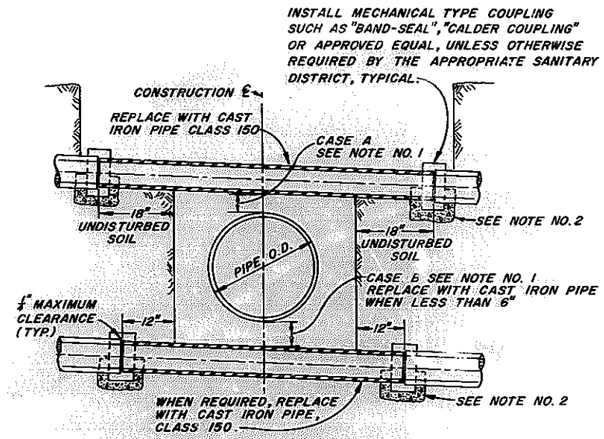

MAIN LINE SEWER

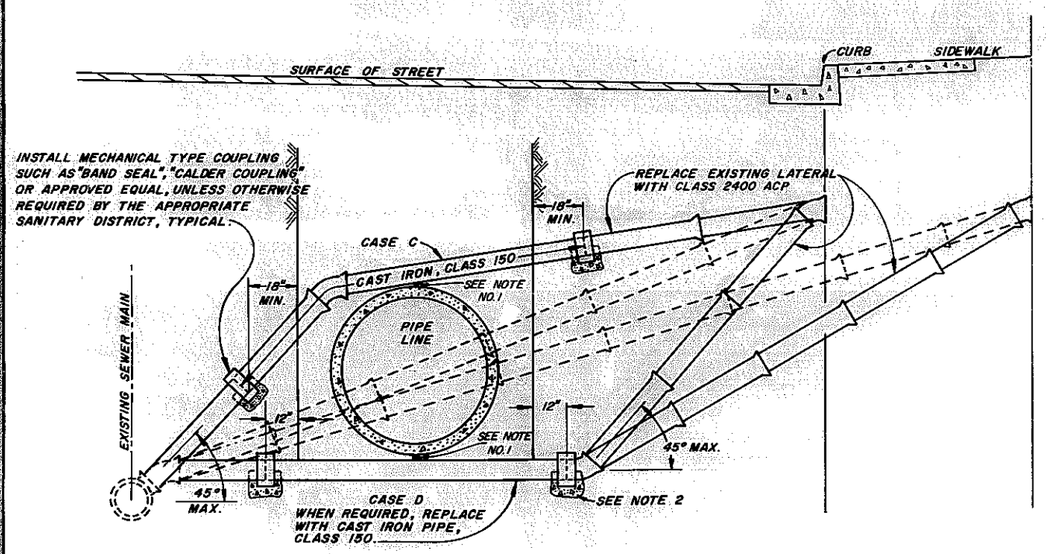

SEWER SERVICE

GENERAL NOTES - SEWER

1. PROVIDE MINIMUM CLEARANCE WHEN REQUIRED BY THE APPROPRIATE SANITARY DISTRICT. IF MINIMUM CLEARANCE IS NOT POSSIBLE, THEN USE CASE C OR D.
2. PLACE CLASS 4B 2000 CONCRETE.
3. THE WORK SHALL BE DONE TO THE SATISFACTION AND SPECIFICATIONS OF THE APPROPRIATE SANITARY DISTRICT.
4. ALL PIPES SHALL MATCH INTERNAL DIAMETER OF EXISTING PIPE AND SHALL HAVE A MINIMUM SLOPE OF 1%.
5. ALL BENDS SHALL BE LONG RADIUS BENDS UNLESS SPECIFIED OTHERWISE.
6. ALL PIPES AND FITTINGS SHALL BE FOR SANITARY SEWER SERVICE. CAST IRON SHALL BE CEMENT LINED.
7. REPLACE CONNECTIONS WITH 4" CLASS 2400 A.C.P. SUPPORTED BY 2"x6" REDWOOD BRIDGE ACROSS TRENCH AND MAIN LINE SEWERS WITH CLASS EQUAL TO, OR GREATER THAN EXISTING SEWER PIPE.
8. WHEN REQUIRED TO GO BEYOND PROPERTY LINE TO OBTAIN REQUIRED GRADE, AGENCY WILL OBTAIN RIGHT OF WAY AND CONTRACTOR SHALL RELOCATE SEWER LATERAL.

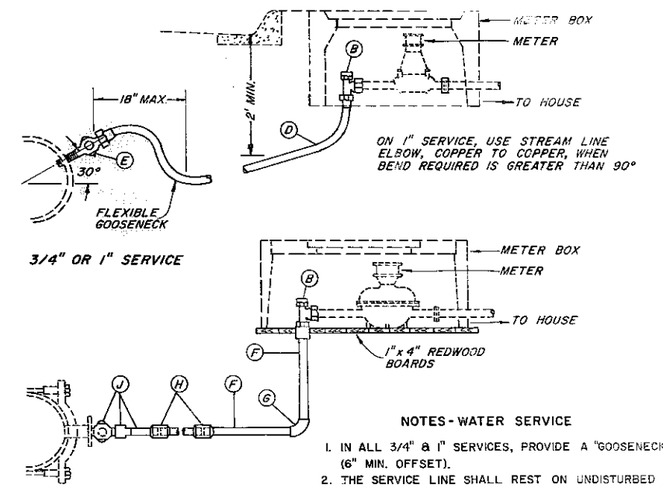

ITEM	MATERIAL	SIZE OF SERVICE			
B	ANGLE METER STOP MUELLER H-14255	3/4"	1"	1-1/2"	2"
D	COPPER PIPE	3/4"	1"		
E	CORPORATION STOP-INCL. TIP NUT	3/4"	1"		
F	COPPER PIPE			1-1/2"	2"
G	STREAM LINE ELBOW-COP. TO COP.			1-1/2"	2"
H	STREAM LINE COUPLING			1-1/2"	2"
J	JOINT COPPER-INCL. COPPER PIPE, CORPORATION STOP & TIP NUT			1-1/2"x24" 1-1/2"x2"	2"x24" 2"

NOTES - WATER SERVICE

1. IN ALL 3/4" & 1" SERVICES, PROVIDE A "GOOSENECK" (6" MIN. OFFSET).
2. THE SERVICE LINE SHALL REST ON UNDISTURBED EARTH IN THE BOTTOM OF THE TRENCH WITH A 24" MIN. COVER (BETWEEN MAIN & CURB LINE).
3. COPPER TUBING SHALL CONFORM TO THE REQUIREMENTS OF THE CURRENT A.S.T.M. STANDARD SPECIFICATIONS FOR COPPER WATER TUBE (SERIAL DESIGNATION B88) TYPE K.
4. 3/4" & 1" COPPER PIPE SHALL BE ANNEALED & HAVE A ROCKWELL HARDNESS NOT GREATER THAN 50F. 1-1/2" & 2" SHALL BE DRAWN & HAVE A HARDNESS WITHIN THE RANGE OF 87F TO 97F.

WATER SERVICE

No.	DATE	REVISION	By
		AS BUILT 5-16-77 Daniel Ellis	

RUSSIAN RIVER - COTATI INTERTIE PROJECT

MISCELLANEOUS DETAILS

SCALE: NONE | APPROVED CHIEF ENGINEER: Walter W. Wirth R.E. 5271 | DATE: JULY 10, 1975 | DESIGNED: R.C. Schuler | SUBMITTED | DRAWING NUMBER: 60-4-102.210

SONOMA COUNTY WATER AGENCY