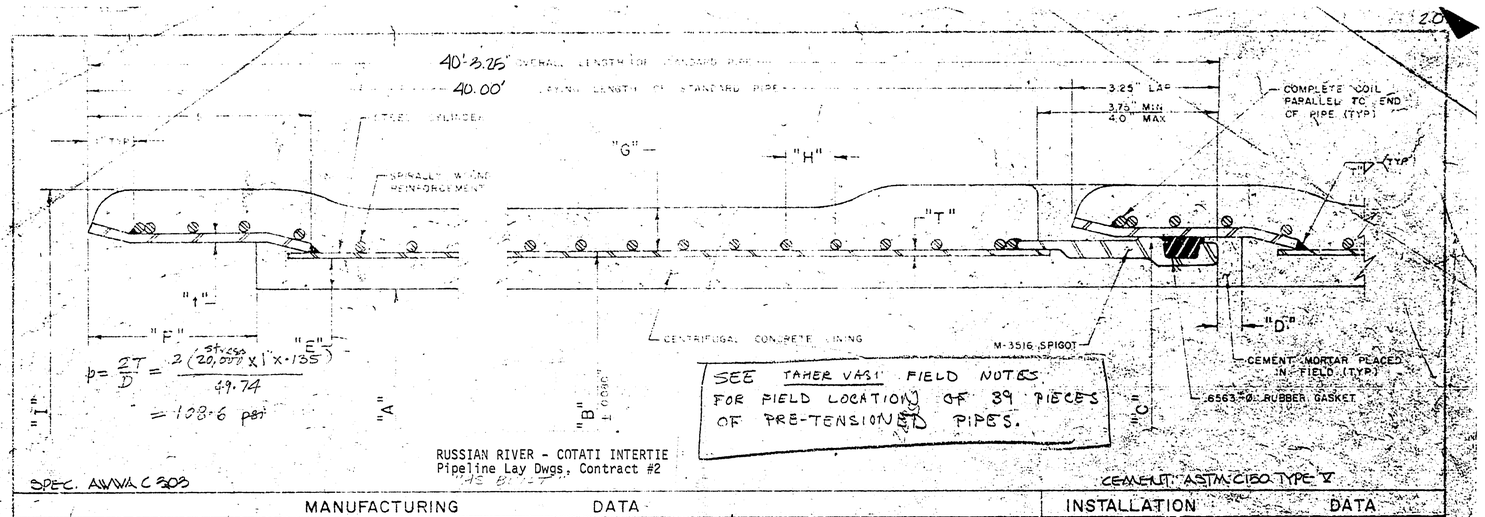

RUSSIAN RIVER - COTATI INTERTIE
Pipeline Lay Dwgs, Contract #2

SPEC. AWWA C 303

CEMENT: ASTM C150 TYPE V

MANUFACTURING DATA																				INSTALLATION DATA					
				STEEL CYLINDER					REINFORCING ROD																
INSIDE DIAM OF PIPE A (IN.)	PIPE CLASS	BID ITEM	TOTAL A_s /FT (SQ. IN.)	GAGE OR THICKNESS T (NO. OR IN.)	A_s /FT (SQ. IN.)	OUTSIDE DIAMETER B (IN.)	PLANT TEST PRESSURE (PSI)	CYL WEIGHT (LB./FT.)	ROD DIAM. (IN.)	A_s /FT (SQ. IN.)	SPACING C TO C H (IN.)	COILS PER FOOT (NO.)	ROD WT (PER FT.)	NOMINAL JOINT DIAMETER C (IN.)	BELL RING THICKNESS (IN.)	DEPTH OF SOCKET F (IN.)	NOMINAL LINING THICKNESS E (IN.)	MIN COATING THICKNESS G (IN.)	MAX OUTSIDE DIAMETER OF PIPE I (IN.)	INSIDE JOINT SPACE D (IN.)	MAX PULL PER JOINT (ANGLE)	MIN PULLED RADIUS USING 40' PIPE (FEET)	OFFSET IN 40' FOR MAXIMUM PULL (FEET)	APPROX WEIGHT OF 40' PIPE (LB.)
54	*		2.15	10	1.61	55.875	97	80.08	5/16	.54	1.70	7.06	27	56.375	1/4"	3.75	.75	1.06	58.99	.50	1°01'	2256	0.71	17,306
54	——	FITTINGS	3.54	1/4	3.00	55.875	181	148.54	5/16	.54	1.70	7.06	27	56.375	1/4"	3.75	.75	1.06	58.99	.50	1°01'	2256	0.71	20,021
48	B-25 C-25		2.09	10	1.61	49.875	109	71.46	1/4	.48	1.22	9.84	21.41	50.375	1/4"	3.75	.75	1.00	52.87	.50	1°08'	2016	0.79	14,949
48	——	FITTINGS	3.48	1/4	3.00	49.875	203	132.82	1/4	.48	1.22	9.84	21.41	50.375	1/4"	3.75	.75	1.00	52.87	.50	1°08'	2016	0.79	17,368
⚠ 30	B-25 C-50 APPROVED		1.20	14	.90	31.875	95	25.37	5/64	.30	1.34	8.96	5.87	32.375	3/16	3.75	.75	1.00	34.75	.50	1°46'	1296	1.24	8885
⚠ 36	A-25		1.62	12	1.26	37.875	112	42.20	1/4	.36	1.69	7.53	12.22	38.375	3/16	3.75	.75	1.00	40.75	.50	1°29'	1586	1.04	10,710

1. COVERS REQUIRED
2. PAINT EXPOSED METAL OF BELL & SPIGOT W/ 1-COAT AMERCOAT 38

$\frac{.48}{2.09} = 23\%$

A-250

* FOR PIPE CLASSES:
B-25 C-250
B-50
B-150
B-200
B-250

⚠ ADDED 36" A 25 PIPE
⚠ COLLECTED FULL DATA FOR 54" PIPE ADDED PIPE CLASSES & SIZES
⚠ ADDED CL. B-25 TO 30" PIPE

APPROVED
OCT-27 1975

11/4/75 CLL
10/9/75 CLL
10/27/75 CLL

RECEIVED
IRRIGATION FACILITIES CONTRACT #2
CLL 9/10/75 San Luis Water District
2085

60-4-102.230.1

OFFICE 6L1

CONTINUED ON 6L2

Contract Drawing Reference	Pipe Size, Type and Class (Joint Detail Reference)	Bid Item Number	Bid Item Length	Description	Detail Dwg. Ref.	Slope Horiz.	Dist.	Plan Looking in Direction of Laying	Inv. Station–Read Up	Pull, Bevel or Turn	Inv. Elevation	Slope Tangent Cosine	Profile Note: View from Right Side of Pipe
		031		1238		1235 1236 1237 1238 1231 1232 1233 1234		328.00 327.94	322+86.93	0°53' UP	57.25	-0°11' .003362 .999994	
				1231	8	STD SECT	5		319+58.98	0°39' DN	63.43	-1°05' .018862 .999822	
				1230		1227 1228 1229 1230 1222 1223 1224 1225 1226		369.05 369.04					
				1222	9	STD SECT	5		315+89.94	0°48' UP	66.22	-0°26' .007550 .999972	
				1221		1219 1220 1221		123.00 122.97					
				1219	3	STD SECT	5		314+66.97		68.89		
				1218	1	SPEC BEVEL 2°24'	6F2	40.91 40.90	314+26.07	2°24' LT	69.78		
			+044	1217A		SPEC BEVEL w/ 4" A.V. TYPE "B"	6F9	40.86	314+01.78	5°56' LT		-1°14' .021713 .999764	
			+045	1217	1	1-V26 16-V9; 16-V30 4°05'	6F8	40.85	313+95.22	3°33' LT 2°01' DN 4°05' CB	70.66		
				1216	1	STD SECT	5	41.00 41.00	313+85.22		70.11		
			+038	1215	1	SPEC w/ 3" O.L. 1-V19	6F7	41.00 41.00	313+44.22		69.55		
				1214		1212 1213 1214		123.03 123.02	313+10				
				1212	3	STD SECT	5		313+03.22				
									311+80.21	0°26' UP	67.88	0°46' .013578 .999908 0°20' .006024 .999982	

CONTINUED FROM 5L4

60-4-102.204 (400) 48 SC 440 FAH (380) 60-4-102.203 (400)

(1) APPROVED
By Haran Date 3-23-76
SONOMA COUNTY WATER AGENCY

SUBJECT TO CORRECTIONS
NOTED ON YOUR (1) DWG. 6L35.0 & 6F48.0

6L23.0

(2) DWG. 6L6.0; 6L18.0 & 6L19.0 ARE NOT APPROVED; REVISE & RESUBMIT.

RECEIVED MAR 10 1976 SONOMA COUNTY WATER AGENCY

Ameron UTILITY PRODUCTS GROUP

RUSSIAN RIVER - CONTR. #2

LAYOUT DRAWING
STATION 311+80.21 TO STATION 322+86.93

SYMBOL	REVISION	DATE	BY	APPV'D.

DRAWN	2-4-76	KW
CHECKED		
APPV'D.		

2314 6L1.0

60-4-102.230.2

1000-1003 (7/75)

CONTINUED ON 6L3

CONTRACT DRAWING REFERENCE	PIPE SIZE TYPE AND CLASS (JOINT DETAIL REFERENCE)	BID ITEM	UNIT LENGTH	PIECE NO.	NO. REQ'D	DESCRIPTION	DETAIL DWG. REF.	SLOPE / HORIZ. DIST.	PLAN LOOKING IN DIRECTION OF LAYING	INV. STATION—READ UP	PULL, BEVEL OR TURN	INV. ELEVATION	SLOPE TANGENT COSINE	PROFILE NOTE: VIEW FROM RIGHT SIDE OF PIPE
60-4-102.204	48SC 446 46N (400)	031				SPEC 1-CUT ELBOW		17.88 / 17.47		337+21.93		49.44	12°21' .219198 .976809	
				1274	1	w/CUT SPIGOT 12°21'	6F13	2.00 / 2.00		337+04.46	12°21' UP	45.62		
						SPEC 1-CUT ELBOW		20.37 / 20.37		337+02.46		45.62	0°00' .00000 1.00000	
				1273	1	w/1-CUT SPIGOT 10°23'	6F12	2.00 / 1.97		336+82.09	10°23' UP	45.62		
						SPEC 1-CUT ELBOW		30.63 / 30.13		336+80.13		45.98	-10°23' .183329 .983607	
				1272	1	w/CUT SPIGOT 9°41'	6F11	10.03 / 10.03		336+50.00	9°41' DN	51.50		
			+045	1271A / 1271		SPEC w/ 18" M.H. w/CUT SPIGOT 1-(W4) 16-(W4) 16-(W3)	6F10 / 6F8	41.00 / 41.00	18" M.H.	336+39.97 / 336+36.97		51.62		
				1270	1	STD SECT	S	41.00 / 41.00		335+98.97		52.12		
				1269	1	STD SECT	S	41.00 / 41.00		335+57.98	0°11' RT	52.61	-0°42' .012111 .999927	
				1268	1	STD SECT	S	41.00 / 41.00		335+36.77 / 335+16.98	0°22'35" 0°12' RT 0°30' DN	53.11		
			+038	1262	1	SPEC w/ 3" O.L. 1-(W9)	6F7	41.00 / 41.00	3" O.L.	334+75.98		53.25		
				1266		1260 1261 1262 1263 1264 1265 1266 1253 1254 1255 1256 1257 1258 1259		1148.06 / 1148.05 / 1197.86		334+51 / 334+34.98 / 334+34.79		53.39		
						1246 1247 1248 1249 1250 1251 1252 1239 1240 1241 1242 1243 1244 1245								
				1239	28	STD SECT	S			322+86.93	0°53' UP	57.25	-0°11' .018862 .999822	
													-1°05' .018862 .999822	

CONTINUED FROM 6L1

Ameron UTILITY PRODUCTS GROUP

Russian River - Contract #2

LAYOUT DRAWING
STATION 322+86.93 TO STATION 337+21.93

SYMBOL	REVISION	DATE	BY	APPV'D.

DRAWN	2-5-76	KW
CHECKED		
APPV'D.		

2314 6L2.0

60-4-102.230.3

1000-1003 (7/75)

CONTINUED ON 6L4

CONTRACT DRAWING REFERENCE	PIPE SIZE TYPE AND CLASS (JOINT DETAIL REFERENCE)	BID ITEM	UNIT LENGTH	PIECE NO.	NO. REQ'D	DESCRIPTION	DETAIL DWG. REF.	SLOPE / HORIZ. DIST.	PLAN LOOKING IN DIRECTION OF LAYING	INV. STATION–READ UP	PULL, BEVEL OR TURN	INV. ELEVATION	SLOPE TANGENT COSINE	PROFILE NOTE: VIEW FROM RIGHT SIDE OF PIPE
60-4-102.205	48 SC 440 4 GA (400)	031		1301		1298 1299 1300 1301		164.02 164.00		348+28.48		59.70		
				1298	4	STD SECT	S			346+64.47	0°21' UP	57.42	0°47' .013907 .999903	
				1297 1296	2	STD SECT	S	82.00 82.00		345+82.47		56.80		
			+038	1295	1	SPEC w/ 3" OL. 1-(629)	6F7	41.00 41.00	3" OL	345+79 345+41.47		56.48		
				1294 1293	2	STD SECT	S	82.00 82.00		344+59.48		55.86		
				1292	1	STD SECT	S	41.00 41.00		344+18.48	0°48' DN	55.55	0°26' .007605 .999977	
				1291 1290 1289	3	STD SECT	S	123.00 122.97		342+95.51		52.87		
				1288	1	STD SECT	S	41.07 41.06		342+54.45	1°02' UP	51.98	1°14' .021765 .999763	
60-4-102.204				1287		1282 1283 1284 1285 1286 1287 1277 1278 1279 1280 1281		451.00 451.00						
				1277	11	STD SECT	S			338+03.45		50.28		
				1276	1	STD SECT w/ CUT SPIGOT	6F1	41.00 41.00		337+62.45		50.13		
						SPEC 1-CUT ELBOW		38.05 38.05		337+24.40	12°09' DN	49.99	0°13' .003760 .999993	
				1275	1	w/ CUT SPIGOT 12°09'	6F11	2.53 2.47		337+21.93		49.44	12°21' .219198 .976809	

CONTINUED FROM 6L2

Ameron UTILITY PRODUCTS GROUP

RUSSIAN RIVER – CONTRACT # 2

LAYOUT DRAWING
STATION 337+21.93 TO STATION 348+28.48

SYMBOL	REVISION	DATE	BY	APPV'D.

DRAWN	KW	2-5-76
CHECKED		
APPV'D.		

2314 6L3.0

60-4-102.230.4

CONTINUED ON 6L5

CONTRACT DRAWING REFERENCE	PIPE SIZE, TYPE AND CLASS (JOINT DETAIL REFERENCE)	BID ITEM	UNIT LENGTH	PIECE NO.	NO. REQ'D	DESCRIPTION	DETAIL DWG. REF.	SLOPE HORIZ.	DIST.	PLAN LOOKING IN DIRECTION OF LAYING	INV. STATION–READ UP	PULL, BEVEL OR TURN	INV. ELEVATION	SLOPE TANGENT COSINE	PROFILE NOTE: VIEW FROM RIGHT SIDE OF PIPE
60-4-102.205	48SC 448 46A (380)	051		1337		1332 1333 1334 1335 1336 1337 1325 1326 1327 1328 1329 1330 1331		533.01 532.97			363+04.18		76.55		
				1325	13	STD SECT	S				357+71.21	0°16' UP	70.15	0°41' .012000 .999928	
				1324		1321 1322 1323 1324		164.00 164.00							
				1321	4	STD SECT	S				356+07.22		68.97		
			+045	1320A 1320	1	SPEC BEVEL w/ 18" M.H. 1-(626) 16-(619) 16-(623) 1°31'	6F10 6F8 6F2	40.95 40.95		18" M.H.	356+00				
											355+66.27	1°31' RT	68.67		
				1319	1	STD SECT	S	41.02 41.02			355+57.87 355+25.25	2°15' 0°44' RT	68.37		
				1318	1	STD SECT	S	41.00 41.00			354+84.25		68.08		
				1317	1	SPEC BEVEL 1°29'	6F2	40.89 40.89			354+43.36	1°29' DN	67.78	0°25' .0072243 .999974	
				1316		1313 1314 1315 1316		164.00 163.91							
				1313	4	STD SECT	S				352+79.45		62.33		
				1312	1	SPEC BEVEL 1°43'	6F2	41.00 40.98			352+38.47	1°43' UP	60.96	1°54' .0332461 .999447	
				1311		1307 1307 1308 1309 1310 1302 1303 1304 1305 1306		410.00 410.00							
	(400)			1302	10	STD SECT	S				348+28.48	0°37' DN	59.70	0°10' .0030852 .999995	
														0°47' .013907 .999903	

CONTINUED FROM 6L3

Ameron UTILITY PRODUCTS GROUP

RUSSIAN RIVER – CONTRACT # 2

LAYOUT DRAWING
STATION 348+28.48 TO STATION 363+04.18

SYMBOL	REVISION	DATE	BY	APPV'D.

DRAWN	KW	2-5-76
CHECKED		
APPV'D.		

2314 6L4.0

60-4-102.230.5

1000-1003 (7/75)

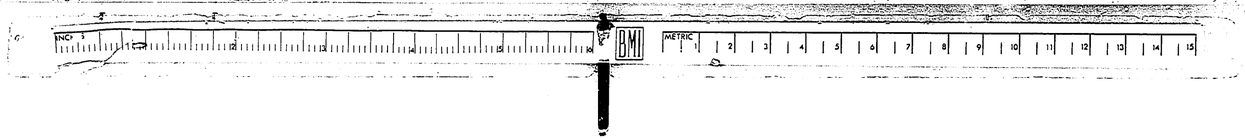

CONTINUED ON 6L6

BID ITEM	UNIT LENGTH	PIECE NO.	NO. REQ'D	DESCRIPTION	DETAIL DWG. REF.	SLOPE HORIZ. DIST.	PLAN LOOKING IN DIRECTION OF LAYING	STATION—READ UP	PULL, BEVEL OR TURN	ELEVATION	SLOPE TANGENT COSINE	PROFILE NOTE: VIEW FROM RIGHT SIDE OF PIPE
031				1365 1366 1367 1368		164.00 164.00		375+74.91		82.71		
			4	STD SECT	S			374+10.91	1°01' DN	82.65	0°01' .000319 1.000000	
			2	STD SECT	S	82.00 81.99		373+25.93		81.16		
			1	STD SECT	S	41.06 41.05		372+87.87	0°57' UP	80.42	1°02' .018179 .999835	
			1	SPEC BEVEL 1°16'	6F2	41.00 41.00		372+46.87	1°16' UP	80.36	0°05' .001454 .999999	
			2	STD SECT	S	82.00 81.98		371+64.89		82.07		
			1	SPEC BEVEL 1°22'	6F2	40.90 40.89		371+24.00	1°22' DN	82.92	1°11' .020846 .999783	
				1352 1353 1354 1355 1356 1357 1346 1347 1348 1349 1350 1351		492.01 492.01						
			12	STD SECT	S			366+31.99	0°26' LT	81.37		
			1	SPEC BEVEL 3°55'	6F2	40.86 40.86		365+95.33	4°21'20"			
			2	STD SECT	S	82.00 82.00		365+91.14	3°55' LT	81.24	0°11' .003150 .999995	
			2	STD SECT	S	82.00 81.98		365+09.14	1°03' DN	80.98		
				1338 1339 1340		123.00 122.97		364+27.16		79.21		
			3	STD SECT	S			363+04.18	0°33' UP	76.55	1°14' .021620 .999766 0°41' .12000 .999928	

CONTINUED FROM 6L4

60-4-102.205

48 SC 360 3/16" R (360)

HSC 40 48 (300)

CONTRACT DRAWING REFERENCE

PIPE SIZE TYPE AND CLASS (JOINT DETAIL REFERENCE)

BILLING

Ameron UTILITY PRODUCTS GROUP

Russian River - Contract #2

LAYOUT DRAWING

STATION 363+04.18 TO STATION 375+74.91

SYMBOL	REVISION	DATE	BY	APPV'D.

DRAWN	KW	2-6-76
CHECKED		
APPV'D.		

2314 6L5.0

1000-1003 (7/75)

60-4-102.230.6

OFFICE 666

CONTINUED ON 667

CONTRACT DRAWING REFERENCE	PIPE SIZE, TYPE AND CLASS (JOINT DETAIL REFERENCE)	BID ITEM	UNIT LENGTH	PIECE NO.	NO. REQ'D	DESCRIPTION	DETAIL DWG. REF.	SLOPE HORIZ.	DIST.	PLAN LOOKING IN DIRECTION OF LAYING	INV STATION—READ UP	PULL, BEVEL OR TURN	INV ELEVATION	SLOPE TANGENT COSINE	PROFILE NOTE: VIEW FROM RIGHT SIDE OF PIPE
60-4-102.206	48 SC 440 4GA. (300)	031				SPEC 1-CUT ELBOW & 2"PH.		39.79 39.79		2"PH	393+36.75 393+34.75		58.38	0°00' .000000 1.00000	
				1411	1	1-(V13) w/ CUT SPIGOT 8°29'	GF14	1.50 1.48			392+96.96	8°29' UP	58.38		
				1410	1	SPEC BEVEL 4°54'	GF2	40.74 40.29			392+95.47		58.61	-8°29' .149126 .989163	
				1409		1406 1407 1408 1409		164.00 163.65			392+55.18	4°54' DN	64.61		
				1406	4	STD SECT	S								
				1405	1	SPEC BEVEL 2°23'	GF2	40.76 40.67			390+91.53		74.95	-3°35 .062575 .998047	
				1404		1399 1400 1401 1402 1403 1404 1392 1393 1394 1395 1396 1397 1398		533.00 532.98			390+50.85	2°23' DN	77.45	-1°12' .021061 .000778	
				1392	13	STD SECT	S				390+09.95	0°42' DN			
	48 SC 360 3/16 R (360)		+045 +041	1391A 1391	1	SPEC w/ 2"AV. & M.H. TYPE B" 1-(V14) 16-(V19) 16-(V13)	GF15 GF8	41.00 41.00			385+17.87		82.63	-0°30' .008806 .999961	
				1390		1385 1386 1387 1388 1389 1390 1379 1380 1381 1382 1383 1384 1373 1374 1375 1376 1377 1378		738.02 738.02		2"AV & M.H. TYPE B	384+80.00 384+76.88	0°31' DN	82.99		
				1373	18	STD SECT	S								
			+039	1372	1	SPEC BEVEL w/ 6" O.L. 1-(V8) 1-(V14) 8-(V18) 8-(V22) 1°31'	GF14 GF2	40.94 40.94		6" O.L.	377+38.86 377+20	0°35' RT	82.76		
				1371 1370	2	STD SECT	S	82.00 82.00			376+97.91	1°31' RT	82.74		
			+045	1369A 1369	1	SPEC w/ 13" M.H. 1-(V24) 16-(V19) 16-(V23)	GF10 GF8	41.00 41.00		13" M.H.	376+15.91 376+00		82.72		
											375+74.91		82.71	0°01' .000319 1.00000	

CONTINUED FROM 665

APPROVED By [signature] Date 5-5-76 SONOMA COUNTY WATER AGENCY

RECEIVED MAY 3 1976 SONOMA COUNTY WATER AGENCY

Ameron UTILITY PRODUCTS GROUP

RUSSIAN RIVER - CONTRACT #2

LAYOUT DRAWING STATION 375+74.91 TO STATION 393+36.75

SYMBOL	REVISION	DATE	BY	APPV'D.
△	Change LO from 390+00.85 to 392+55.13	4/20/76	[illegible]	

DRAWN	[illegible]	2-6-76
CHECKED		
APPV'D.		

2314 - 666.1

60-4-102.230.7

1000-1003 (7/75)

CONTINUED ON 668

22 DISTANCE 1 SECOND THERE?

CONTRACT DRAWING REFERENCE	PIPE SIZE TYPE AND CLASS (JOINT DETAIL REFERENCE)	BID ITEM (BILLING)	UNIT LENGTH (BILLING)	PIECE NO.	NO. REQ'D	DESCRIPTION	DETAIL DWG. REF.	SLOPE HORIZ.	DIST.	PLAN LOOKING IN DIRECTION OF LAYING	INV. STATION—READ UP	PULL, BEVEL OR TURN	INV. ELEVATION	SLOPE TANGENT COSINE	PROFILE NOTE: VIEW FROM RIGHT SIDE OF PIPE
60-4-102.706	48SC 440 46A (380)	031		1435		1432 1433 1434 1435 1428 1429 1430 1431		328.00 327.69			402+78.74		57.00		
				1428	8	STD SECT	S				399+91.87				
				1427	1	SPEC BEVEL 1°54'	6F2	40.86 40.82			399+51.05	1°54' DN	71.19	-2°28' .043293 .999064	
				1426	1	STD SECT	S	41.00 41.00			399+10.05		71.60		
			+040	1425	1	SPEC w/ BEVEL w/ 2" AV. TYPE "A" 1°25'	6F17 6F2	40.90 40.89		2" AV TYPE "A"	398+71.16 398+69.16	1°25' DN	72.00	-0°34' .009892 .999951	
				1424		1421 1422 1423 1424		164.00 163.98							
				1421	4	STD SECT	S				397+05.18	0°13' UP	69.56	0°51' .014900 .999889	
				1420		1417 1418 1419 1420		164.00 163.99							
				1417	4	STD SECT	S				395+41.19	0°52' DN	67.77	0°37' .010902 .999941	
				1416		1414 1415 1416		123.00 122.96							
				1414	3	STD SECT	S				394+18.23	1°07' DN	64.54	1°30' .026254 .999656	
				1413	1	SPEC BEVEL 3°22' OK	6F2	40.75 40.21			393+77.52	3°22' DN	62.67	2°37' .045939 .998946	
				1412	1	SPEC BEVEL w/ CUT SPIGOT 5°00'	6F2	41.00 40.78			393+36.75	6°00' UP	58.38	6°00' .105104 .994522	
										CONTINUED FROM 666				0°00' .000000 1.00000	

Ameron UTILITY PRODUCTS GROUP

Russian River - Contract #2

LAYOUT DRAWING

STATION 393+36.75 TO STATION 402+78.74

SYMBOL	REVISION	DATE	BY	APPV'D.

DRAWN	KW	2-6-76
CHECKED		
APPV'D.		

2314 6270

60-4-102.230.8

1000-1003 (7/75)

CONTINUED ON 669

CONTRACT DRAWING REFERENCE	PIPE SIZE, TYPE AND CLASS	(JOINT DETAIL) REFERENCE	BID ITEM	UNIT LENGTH	FIELD CUT NO.	NO. REQ'D	DESCRIPTION	DETAIL DWG. REF.	SLOPE HORIZ.	DIST.	PLAN LOOKING IN DIRECTION OF LAYING	INV. STATION—READ UP	PULL, BEVEL OR TURN	INV. ELEVATION	SLOPE TANGENT COSINE	PROFILE NOTE: VIEW FROM RIGHT SIDE OF PIPE
				BILLING												
			031			1	STD SECT	S	41.07 / 41.05			412+61.70		78.52	1451 .030734 .999528	
						1	STD SECT	S	41.00 / 41.00			412+20.65	1°03' UP	77.26		
						1	STD SECT	S	41.00 / 41.00			411+79.66		76.75		
						1	STD SECT	S	41.00 / 41.05			411+38.66		76.24		
						4	1452 1453 1454 1455 STD	S	164.00 / 163.98			410+97.66	1°00' DN	75.73	0451 .012413 .999923	
							1446 1447 1448 1449 1450 1451 1460 1461 1462 1463 1464 1465		492.00 / 491.78			409+33.74		70.80		
						12	STD SECT	S								
						1	SPEC - BEVEL w/ CUT SPIGOT @ 5°00'	682	40.64 / 40.62			404+41.96	0°03' UP	55.99	1°43' .030106 .999547	
							SPEC 1-CUT ELBOW		31.24 / 31.01			404+01.34	5°20' DN	54.81	1451 .029093 .999577	
						1	w/ CUT SPIGOT	6F11	10.00 / 10.00			403+70.33	7°00' UP	51.00	980' .122785 .992540	
							SPEC 1-CUT ELBOW & BEVEL 5°56' @ 7°56'		10.33 / 10.33			403+60.33		51.00	0°00' .000000 1.00000	
						1	w/ CUT SPIGOT	6F16 6F5	30.59 / 30.30			403+50.00	7°56' UP	51.00	-7°56' .190599 .982276	
				+0.45		1	SPEC w/ 18" M.H. 1- @ 16 @ 16 @	6F10 6F8	41.00 / 40.96			403+19.70 18" M.H. 403+00	5°28' DN	55.23		
												402+78.74		57.00	-2°25' .042298 .999292	

CONTINUED FROM 667

60-4-102.207

48.35 360 4in ℄ (380)

60-4-102.206

48.35 460 16in (380)

+0.45

18" M.H.

Ameron UTILITY PRODUCTS GROUP

RUSSIAN RIVER – CONTRACT #2

Ø BEVEL & CUT SPIGOT TOGETHER IS QUESTIONED OK

LAYOUT DRAWING

STATION 402+78.74 TO STATION 412+61.90

SYMBOL	REVISION	DATE	BY	APPV'D.

DRAWN	KO	2-6-76
CHECKED		
APPV'D.		

2314 668

60-4-102.230.9

1000-1003 (7/75)

CONTINUED ON 618

BID ITEM / BILLING	UNIT LENGTH	PIECE NO.	NO. REQ'D	DESCRIPTION	DETAIL DWG. REF.	SLOPE HORIZ.	SLOPE DIST.	PLAN LOOKING IN DIRECTION OF LAYING	INV. STATION—READ UP	PULL, BEVEL OR TURN	INV. ELEVATION	SLOPE TANGENT COSINE	PROFILE NOTE: VIEW FROM RIGHT SIDE OF PIPE
081													
				1501 1502 1503 1504									
			4	STD SECT		S							
				1495 1496 1497 1498 1499 1500 1505 1506 1507 1508 1509 1510 1511 1512 1513 1514									
			13	STD SECT		S							
			1	SPEC BEVEL 2°03'		68°V							
			1	STD SECT		S							
				SPEC BEVEL w/ 4" AV TYPE "B" SEE M.H.		69							
+041 +045			1	1-(010) 16-(019) 16-(023) 9.019'		68 67		4" AV TYPE B M.H.	422+90.54				
				1490 1491 1492 1493 1494 1495 1496 1497 1498 1499									
				1469 1470 1471 1472 1473 1474 1463 1464 1465 1466 1467 1468									
			22	STD SECT		S			423+04.55		81.17	0°10' .003096 .999995	
			1	SPEC BEVEL 1°35'		11°E			423+03.66	1°35' DN	81.04		
			2	STD SECT		S			422+61.70		78.52	1°45' .028734 .999587	
									431+06.28		96.85		
									429+42.31	1°01' DN	80.01	-1°00' .019458 .999815	
									424+09.31		80.83		
									423+08.31	2°03' UP	80.89	-0°05' .001526 .999999	
									423+27.34		82.43		
									422+90.54			-2°09' .037550 .999296	
									422+80.54	2°09' DN	83.96		

CONTINUED FROM 618

CONTRACT DRAWING REFERENCE

PIPE SIZE, TYPE AND CLASS

(JOINT DETAIL) REFERENCE

60-4-102.230.9A (2001)

48 SC 300 3/4" P

60-4-102.230.9A

LAYOUT DRAWING
STATION — TO STATION 431+06.28

SYMBOL	REVISION	DATE	BY	APPV'D.

Ameron UTILITY PRODUCTS GROUP

RUSSIAN RIVER - CONTRACT #2

DRAWN	KW	2-9-96
CHECKED		
APPV'D.		

23.14 — 619.0

60-4-102.230.9A

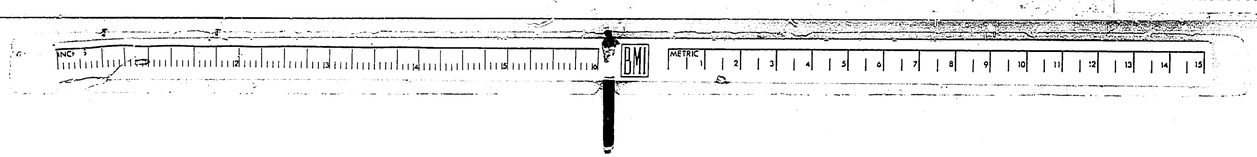

CONTINUED ON 6L11

BID ITEM	UNIT LENGTH	PIECE NO.	NO. REQ'D	DESCRIPTION	DETAIL DWG. REF.	SLOPE HORIZ.	DIST.	PLAN LOOKING IN DIRECTION OF LAYING	INV. STATION—READ UP	PULL, BEVEL OR TURN	INV. ELEVATION	SLOPE TANGENT COSINE	PROFILE NOTE: VIEW FROM RIGHT SIDE OF PIPE
031	+039	1514	1	SPEC w/ 6" O.L. 1-(6L4) 1-(6L8) 8-(6L18) 8-(6L22)	6F24	41.00 41.00			435+59.46		67.96		
		1516	1	SPEC w/ TAPPED HOLE IN BELL FOR AIR TEST	6F23	41.00 41.00			435+25 ~~434~~+18.46 435		67.97		
		1515	1	SPEC w/ TAPPED HOLE IN BELL FOR AIR TEST	6F23	41.00 41.00			434+77.46		67.98		
	+045 +½037 +½042	1514A 1514	1	SPEC w/ 18" MH. & 2" AV. & FLG'D END 1-(6L6) 16-(6L9) 16-(6L13)	6F10 6F22	14.84 14.84			434+36.46 434+30 434+22.62 434+21.62		68.00 68.00		
				48" BUTTERFLY VALVE (BY OTHERS)		1.25 1.25			434+20.37		68.00		
	+½037	1513	1	SPEC FLG'D END	6F21	0.37 0.37			434+20.00	3°27' UP	68.00	-0°01' .000291 1.000000	
	+½042	1512A		SPEC SHORT BEVEL w/ 18" M.H., 8" T.O. TYPE 'A', & 2" A.V.	6F10	26.94 26.89			434+19 434+10 434+00				
	+034 +045	1512	1	1-(6L6) 16-(6L9) 16-(6L13) 3°27'	6F20 6F6				433+93.11	3°01' LT	69.63	-3°28' .060761 .998159	
		1511	1	SPEC BEVEL 3°01'	6F6	40.89 40.82			433+52.29	0°59' LT 2°22' DN 2°34' CB	72.11		
		1510	1	SPEC BEVEL 2°34'	6F6	40.83 40.82			433+11.47		72.90		
		1509		1506 1507 1508 1509		164.00 163.97							
		1506	4	STD SECT WSP	3				431+47.50		76.06		
		1505	1	SPEC w/ WSP BELL & CCP SPIGOT	6F19	41.23 41.22			431+06.28		76.85	-1°06' .019253 .999815	

CONTINUED FROM 6L9

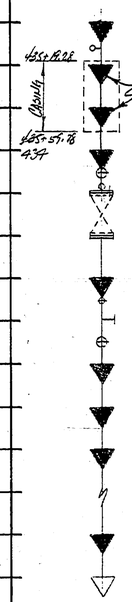

60-4-102.207

48SC 300 3/16 ℞ (360)

CONTRACT DRAWING REFERENCE | PIPE SIZE, TYPE AND CLASS (JOINT DETAIL REFERENCE)

1512 1474 38

BILLING

LAYOUT DRAWING STATION 431+06.28 TO STATION 435+59.46

SYMBOL	REVISION	DATE	BY	APPV'D.

Ameron UTILITY PRODUCTS GROUP

RUSSIAN RIVER - CONTRACT #2

DRAWN	RW	2-9-76
CHECKED		
APPV'D.		

2314 6L10.0

60-4-102.230.10

1000-1003 (7/75)

CONTINUED ON 6L11

BID ITEM	UNIT LENGTH	PIECE NO.	NO. REQ'D	DESCRIPTION	DETAIL DWG. REF.	SLOPE HORIZ.	DIST.	PLAN LOOKING IN DIRECTION OF LAYING	INV. STATION—READ UP	PULL, BEVEL OR TURN	INV. ELEVATION	SLOPE TANGENT COSINE	PROFILE NOTE: VIEW FROM RIGHT SIDE OF PIPE
031	+039	1514	1	SPEC w/ 6" O.L. 1-(624) 1-(618) 8-(618) 8-(622)	6F24	41.00 41.00		435+59.46			67.96		
		1516	1	SPEC w/ TAPPED HOLE IN BELL FOR AIR TEST	6F23	41.00 41.00		435+25			67.97		
		1515	1	SPEC w/ TAPPED HOLE IN BELL FOR AIR TEST	6F23	41.00 41.00		434+18.46			67.98		
	+045 +1/2037 +1/2042	1514	1	SPEC w/ 18" MH. & 2" AV. & FLG'D END 1-(626) 16-(619) 16-(623)	6F10 6F22	14.84 14.84		434+77.46			68.00		
				48" BUTTERFLY VALVE (BY OTHERS)		1.25 1.25		434+36.46			68.00		
	+1/2037	1513	1	SPEC FLG'D END	6F21	0.37 0.37		434+30			68.00		
	+1/2042	1512A		SPEC SHORT BEVEL w/ 18" MH., 8" T.O. TYPE "A", & 2" A.V.	6F10	26.94 26.89		434+22.62			68.00		
	+034 +045	1512	1	1-(626) 16-(619) 16-(623) 3°27'	6F20 6F6			434+21.62			68.00		
		1511	1	SPEC BEVEL 3°01'	6F6	40.89 40.82		434+20.37			68.00		
		1510	1	SPEC BEVEL 2°34'	6F6	40.83 40.82		434+20.00	3°27' UP		68.00		
		1509		1506 1507 1508 1509		164.00 163.97		434+19					
		1506	4	STD SECT WSP	3			434+10					
		1505	1	SPEC w/ WSP BELL & CCP SPIGOT	6F19	41.23 41.22		434+00					
								433+93.11	3°01' LT		69.63		
								~~433+83~~ .16	4°00'17"				
								433+52.29	0°59' LT 2°22' DN 2°34' CB		72.11		
								433+11.47			72.90		
								431+47.50			76.06		
								431+06.28			76.85		

CONTINUED FROM 6L9

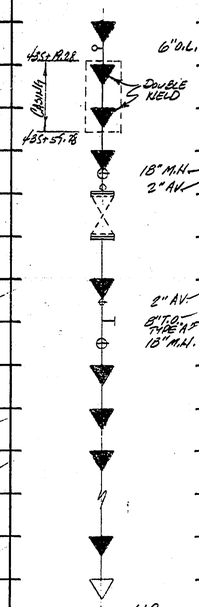

CONTRACT DRAWING REFERENCE	PIPE SIZE, TYPE AND CLASS (JOINT DETAIL REFERENCE)	BILLING
60-4-102.207	48SC 360 #/10 R (3800)	

Ameron UTILITY PRODUCTS GROUP

RUSSIAN RIVER - CONTRACT #2

LAYOUT DRAWING STATION 431+06.28 TO STATION 435+59.46

SYMBOL	REVISION	DATE	BY	APPV'D.

DRAWN	KW	2-9-76
CHECKED		
APPV'D.		

2314 6L10.0

60-4-102.230.11

1000-1003 (7/75)

CONTRACT DRAWING REFERENCE	PIPE SIZE, TYPE AND CLASS	(JOINT DETAIL) REFERENCE	BID ITEM	UNIT LENGTH	PIECE NO.	NO. REQ'D	DESCRIPTION	DETAIL DWG. REF.	SLOPE HORIZ.	SLOPE DIST.	PLAN LOOKING IN DIRECTION OF LAYING	INV. STATION—READ UP	PULL, BEVEL OR TURN	INV. ELEVATION	SLOPE TANGENT COSINE	PROFILE NOTE: VIEW FROM RIGHT SIDE OF PIPE
			BILLING													
	42" RCP (Bell)	031			1		SPEC BEVEL 2°58'	1F3				41.00 / 41.00				
					1		SPEC SHORT	6F26				25.34 / 25.31				
			+0.05		1		SPEC w/ 18" M.H. & BEVEL 1-(15A) 16-(14) 16-(13) 2°32'	6F10 6F27 6F24				40.82 / 40.77				
					1		STD SECT	S				41.00 / 41.00				
							1527 1523 1534 1531 1536 1526 1527 1528 1529 1532 1531					451.00 / 451.00				
					11		STD SECT	S								
					1		STD SECT	S				41.00 / 41.00				
					1		SPEC SHORT BEVEL 2°06'	6F26 6F2				20.00 / 20.00				
					1		SPEC SHORT	6F26				16.10 / 16.09				
					1		STD SECT	S				41.00 / 40.97				
					1		SPEC w/ CCP BELL & NSP SPIGOT	6F25				40.69 / 40.65				
					1		SPEC BEVEL 2°47'	6F4				40.83 / 40.83				
					2		1518 1519					82.00 / 82.00				
					2		STD SECT NSP	B								

CONTINUED ON 6L12

CONTINUED FROM 6L10

STATION—READ UP	PULL, BEVEL OR TURN	INV. ELEVATION	SLOPE TANGENT COSINE
444+40.08		59.12	.00091 / .002539 / .999990
443+99.08	2°58" UP	59.00	
443+73.97		60.21	
18" M.H. 443+50			-.20441 / .047960 / .998861
443+33.00	2°32' DN	62.16	
442+92.00		62.30	
438+41.00		63.79	
438+24.32 / 438+07.32			
438+00.00		63.93	
437+80.00	2°06' UP	63.99	-.0911 / .003316 / .999995
437+63.91		64.64	
437+22.94		66.28	
436+82.29	2°47' DN	67.92	-.298 / .084228 / .999293
436+41.46		67.94	
435+59.46		67.96	-0°01' / .000291 / 1.00000

Ameron UTILITY PRODUCTS GROUP

Russian River - Contract #2

LAYOUT DRAWING
STATION 435+59.46 TO STATION 444+40.08

SYMBOL	REVISION	DATE	BY	APPV'D.

DRAWN LW 2-9-76
CHECKED

2314 6L11.0

60-4-102.230.12

1000-1003 (7/75)

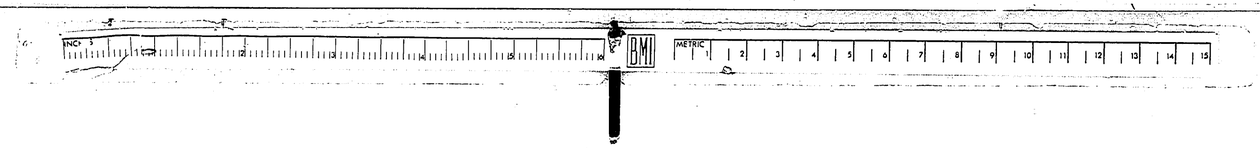

CONTINUED ON 6L13

CONTRACT DRAWING REFERENCE	PIPE SIZE TYPE AND CLASS (JOINT DETAIL REFERENCE)	BID ITEM	UNIT LENGTH	PIECE NO.	NO. REQ'D	DESCRIPTION	DETAIL DWG. REF.	SLOPE HORIZ.	DIST.	PLAN LOOKING IN DIRECTION OF LAYING	INV. STATION–READ UP	PULL, BEVEL OR TURN	INV ELEVATION	SLOPE TANGENT COSINE	PROFILE NOTE: VIEW FROM RIGHT SIDE OF PIPE
60-4-102.209	4850 360 3/16" B (360)	031		1603		1600 1601 1602 1603 1593 1594 1595 1596 1597 1598 1599		451.00 450.93			470+22.65		68.49		
				1593	11	STD SECT	S				465+71.72	0°42' DN	76.52	-1°01' .017809 .999841	
				1592		1589 1590 1591 1592 1583 1584 1585 1586 1587 1588 1577 1578 1579 1580 1581 1582		656.00 655.99							
				1579	16	STD SECT	S				459+15.73	0°41' DN	80.04	-0°18' .005366 .999986	
			+045 +041	1574	1	SPEC w/ 2" A.V. TYPE "B" @ 18" M.H. 1-(120) 16-(119) 16-(123)	6F15 6F27	41.00 41.00		2" AV. TYPE "B" @ 1 M.H. 18"	459+10.00 458+74.73		79.77		
				1575		1570 1571 1572 1573 1574 1575 1563 1564 1565 1566 1567 1568 1569		533.00 532.99							
				1563	13	STD SECT	S				453+41.74		76.29		
				1562	1	SPEC BEVEL 1°20'	6F3	40.90 40.90			453+00.84	1°20' DN	76.03	0°22' .006525 .999979	
				1561		1556 1557 1558 1559 1560 1561 1550 1551 1552 1553 1554 1555		492.00 491.98							
				1550	12	STD SECT	S				448+09.06		61.28		
				1549	1	SPEC BEVEL 1°33'	6F3	41.00 40.98			447+68.08	1°33' UP	60.05	1°43' .029983 .999551	
	4850 440 4GA (380)			1548		1545 1546 1547 1548 1541 1542 1543 1544		328.00 328.00							
				1547	8	STD SECT	S				444+40.08		59.12		
														0°09' .002839 .999996	

CONTINUED FROM 6L11

BILLING															

Ameron UTILITY PRODUCTS GROUP

RUSSIAN RIVER - CONTRACT #2

LAYOUT DRAWING
STATION 444+40.08 TO STATION 470+22.65

SYMBOL	REVISION	DATE	BY	APPV'D.

DRAWN	LW	2-10-76
CHECKED		
APPV'D.		

2314 6L12.0

60-4-102.230.13

1000-1003 (7/75)

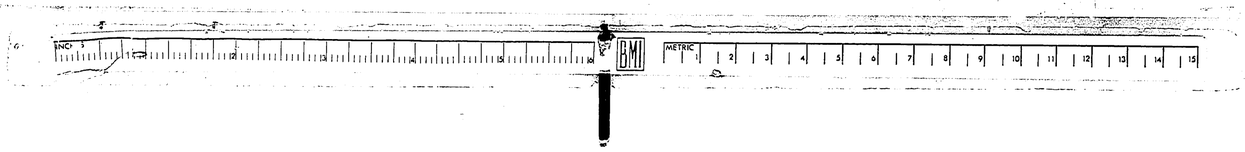

CONTINUED ON 6L14

CONTRACT DRAWING REFERENCE	PIPE SIZE, TYPE AND CLASS (JOINT DETAIL REFERENCE)	BID ITEM	UNIT LENGTH	PIECE NO.	NO. REQ'D	DESCRIPTION	DETAIL DWG. REF.	SLOPE HORIZ.	DIST.	PLAN LOOKING IN DIRECTION OF LAYING	INV STATION—READ UP	PULL, BEVEL OR TURN	INV ELEVATION	SLOPE TANGENT COSINE	PROFILE NOTE: VIEW FROM RIGHT SIDE OF PIPE
60-4-102.229	48 SC 360 3/10" RD (360)	031			2	STD SECT	S	82.00 / 81.88			485+44.54		76.80		
					1	SPEC BEVEL 2°51'	6F3	41.00 / 40.94			484+62.66		72.33		
						1634 1635 1636 1637 1638 1629 1630 1631 1632 1633		820.00 / 819.99			484+21.72	2°51' UP	70.10	3°07' .054545 .998516	
						1624 1625 1626 1627 1628 1619 1620 1621 1622 1623									
					20	STD SECT	S								
			+039		1	SPEC w/ 6" O.L. 1-(68) 1-(624) 8-(618) 8-(622)	6F14	41.00 / 41.00		6" O.L.	476+01.73 / 475+75		66.29		
						1615 1616 1617 1609 1610 1611 1612 1613 1614		369.00 / 369.00			475+60.73		66.10		
					9	STD SECT	S								
					1	SPEC BEVEL 2°48'	6F3	40.80 / 40.80			471+91.74		64.39		
			+045 +039		1	SPEC w/ 18" M.H. & BEVEL 1-(100) 16-(619) 16-(623) w/ CUT SPIGOT 3°04'	6F10 6F27 6F3	41.00 / 40.94		18" M.H.	471+50.94 / 471+30	2°48' DN	64.20	0°16' .004646 .999989	
					1	SPEC SHORT BEVEL w/ CUT SPIGOT 5°00'	6F26 6F3	25.61 / 25.61			471+10.00	3°04' UP	62.00	3°04' .053677 .998564	
					1	SPEC SHORT w/ CUT SPIGOT	6F24	21.44 / 21.32			470+84.39	6°00' UP	62.00	0°00' .000000 1.000000	
					1	SPEC BEVEL 4°58'	6F3	40.64 / 40.42			470+63.06		64.24		
											470+22.65	4°58' DN	68.49	-6°00' .105084 .994524	
														-1°01' .017809 .999841	

CONTINUED FROM 6L12

Ameron UTILITY PRODUCTS GROUP

Russian River - Contract #2

LAYOUT DRAWING

STATION 470+22.65 TO STATION 485+44.54

SYMBOL	REVISION	DATE	BY	APPV'D.

DRAWN KW 2-10-76

CHECKED

APPV'D.

2314 6L13.0

1000-1003 (7/75)

60-4-102.230.14

CONTINUED ON 6L15

CONTRACT DRAWING REFERENCE	PIPE SIZE TYPE AND CLASS	(JOINT DETAIL) REFERENCE	BID ITEM	BILLING UNIT LENGTH	PIECE NO.	NO. REQ'D	DESCRIPTION	DETAIL DWG. REF.	SLOPE HORIZ.	SLOPE DIST.	PLAN LOOKING IN DIRECTION OF LAYING	INV. STATION—READ UP	PULL, BEVEL OR TURN	INV. ELEVATION	SLOPE TANGENT COSINE	PROFILE NOTE: VIEW FROM RIGHT SIDE OF PIPE
			031	+045		1	SPEC BEVEL w/ 18" M.H. 1-(MH)16-(MH)16-(LH13) 2°44'	6F15 6F17 6F2		40.80 40.75		505+11.95		67.01	-.055' .650 W .998705	
					1083 1684 1685 1686 1687 1688 1676 1677 1678 1679 1680 1681 1682					533.00 533.00	18" M.H.	505+00				
					13		STD SECT	S				504+71.20	2°44' DN	69.09		
					1		STD SECT	S		41.03 41.03		499+38.21		70.78		
					1		SPEC BEVEL 2054'		10F35	40.90 40.90		498+97.18	0°56' RT.	70.85		
					1670 1671 1672 1673 1666 1667 1668 1669					656.00 656.00		498+56.28	2°54' RT	70.98		
					1662 1663 1664 1665 1658 1659 1660 1661											
					16		STD SECT	S				492+00.28	0°09' UP	73.00	-.090' .003070 .999695	
					1		STD SECT	S		41.00 41.00		491+59.28		73.24		
			+039		1		SPEC w/ 6" O.L. 1-(LH)1-(MH)8-(LH)5-(LH14)	6F14		41.00 41.00	6"O.L.	491+30				
					1660 1651 1652 1653 1654 1655 1663 1644 1645 1646 1647 1648 1649					533.00 532.99		491+18.28		73.67		
					13		STD SECT	S								
			+045 +041		1		SPEC BEVEL w/ 8" IN 48" M.H. 1-(MH)16-(LH13)/16-(LH12) 2°07'	6F15 6F17 6F2		40.75 40.75		485+50		76.56	-.090' .005787 .999813	
											2" A.V. 1/4 BEND 8" 10ft M.H.	485+44.54	3°27' DN	76.80	.397' .054545 .992516	
											CONTINUED FROM 6L13					

Ameron UTILITY PRODUCTS GROUP

Russian River - Contract #2

LAYOUT DRAWING
STATION 485+44.54 TO STATION 505+11.95

SYMBOL	REVISION	DATE	BY	APPV'D.

DRAWN	LW	2-10-76	
CHECKED			
APPV'D.			

2314 6W4.0

60-4-102.230.15

1000-1003 (7/75)

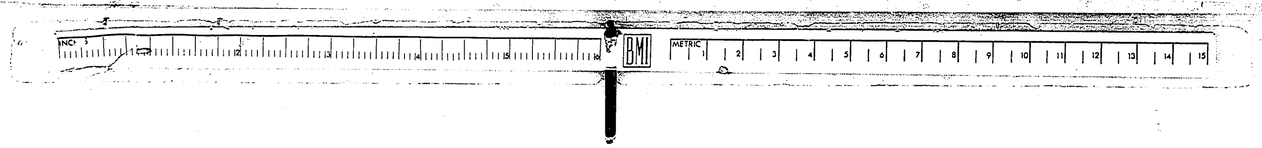

6L15

CONTINUED ON 6L16

CONTRACT DRAWING REFERENCE	PIPE SIZE, TYPE AND CLASS (JOINT DETAIL REFERENCE)	BID ITEM	UNIT LENGTH	PIECE NO.	NO. REQ'D	DESCRIPTION	DETAIL DWG. REF.	SLOPE HORIZ.	DIST.	PLAN LOOKING IN DIRECTION OF LAYING	INV. STATION—READ UP	PULL, BEVEL OR TURN	INV. ELEVATION	SLOPE TANGENT COSINE	PROFILE NOTE: VIEW FROM RIGHT SIDE OF PIPE
60-4-102.210	48SC 480 1/4 (200)	031		[illegible]	1	SPEC SHORT w/ 2" PH. 1-(628)	6F28	11.52 11.43		2" PH.	520+80.37 520+78.37		61.36		
	(300)			[illegible]	1	SPEC BEVEL 5°00'	6F6	40.64 40.31			520+68.94		62.83	-7°20' .128728 .991816	
				[illegible]	1	STD SECT WSP	3	41.00 40.99			520+28.64	5°56' DN	68.02		
				[illegible]	1	SPEC w/ WSP BELL & CCP SPIGOT	6F19	41.23 41.22			519+87.65		69.01		
				[illegible]	1	SPEC BEVEL 1°26'	6F3	40.90 40.89			519+46.43		70.01	-1°23' .024258 .999706	
			+045 +041	[illegible]	1	SPEC w/ 2" AV & M.H. TYPE "B" 1-(626) 16-(619) 16-(623)	6F15 6F27	41.00 41.00		2" AV TYPE "B" M.H.	519+05.54 519+00 518+64.54	1°26' DN	71.00		
	48SC 360 3/16 (340)			[illegible]		1718 1719 1720 1721 1722 1713 1714 1715 1716 1717		1230.00 1230.00					70.97		
						1708 1709 1710 1711 1712 1703 1704 1705 1706 1707									
						1698 1699 1700 1701 1702 1693 1694 1695 1696 1697									
				[illegible]	30	STD SECT	5				506+34.54		70.02		
	(360)			[illegible]	1	SPEC BEVEL w/ CUT SPIGOT 4°07'	6F3	40.70 40.70			505+93.84	4°07' DN	69.99	0°02' .000772 1.00000	
				[illegible]	1	SPEC BEVEL w/ CUT SPIGOT 4°10'	6F3	41.00 40.89			505+52.95	4°10' UP	67.01	4°10' .072859 .997356	
				[illegible]	1	SPEC BEVEL w/ CUT SPIGOT 2°55'	6F3	41.00 41.00			505+11.95	2°55' UP	67.01	0°00' .000000 1.00000	
														-2°55' .050941 .998705	

CONTINUED FROM 6L14

~~SEE SHEET 6L8~~ OK

Ameron UTILITY PRODUCTS GROUP

RUSSIAN RIVER - CONTRACT #2

LAYOUT DRAWING
STATION 505+11.95 TO STATION 520+80.37

SYMBOL	REVISION	DATE	BY	APPV'D.

DRAWN	KW	2-10-76
CHECKED		
APPV'D.		

2314 6L15.0

1000-1003 (7/75)

60-4-102.230.16

CONTINUED ON 6L17

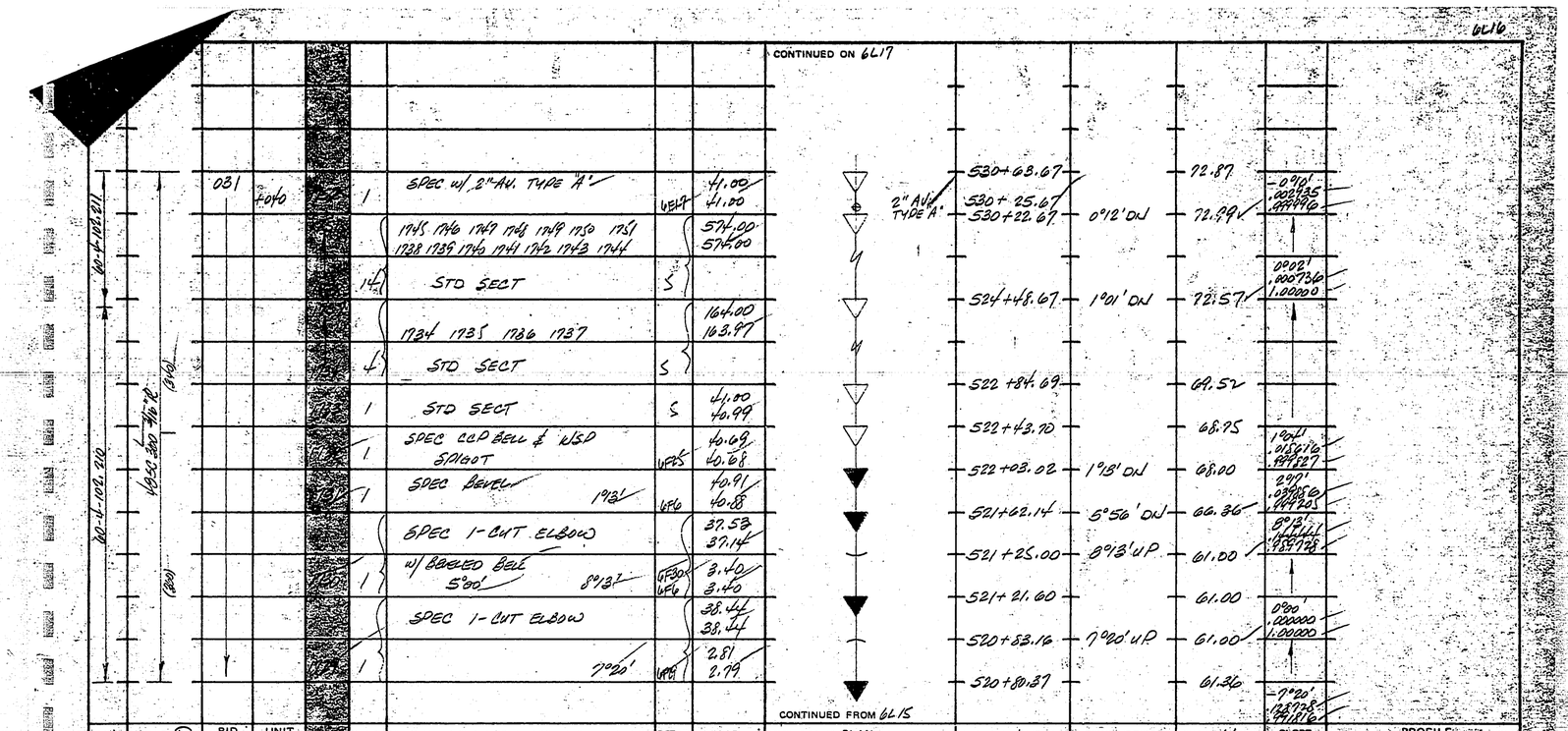

CONTRACT DRAWING REFERENCE	PIPE SIZE TYPE AND CLASS (JOINT DETAIL REFERENCE)	BID ITEM	UNIT LENGTH	BILLING	NO. REQ'D	DESCRIPTION	DETAIL DWG. REF.	SLOPE HORIZ.	DIST.	PLAN LOOKING IN DIRECTION OF LAYING	INV. STATION—READ UP	PULL, BEVEL OR TURN	INV. ELEVATION	SLOPE TANGENT COSINE	PROFILE NOTE: VIEW FROM RIGHT SIDE OF PIPE
60-4-102.210	60-4-102.211	031	+040		1	SPEC w/ 2" AV. TYPE "A"	6E17	41.00 / 41.00		2" AV. TYPE "A"	530+63.67		72.87	-0°10' .002935 .999996	
						1745 1746 1747 1748 1749 1750 1751 1738 1739 1740 1741 1742 1743 1744		574.00 / 574.00			530+25.67 / 530+22.67	0°12' DN	72.99		
					14	STD SECT	S							0°02' .000736 1.00000	
						1734 1735 1736 1737		164.00 / 163.97			524+48.67	1°01' DN	72.57		
					4	STD SECT	S								
					1	STD SECT	S	41.00 / 40.99			522+84.69		69.52		
					1	SPEC CCP BELL & WSP SPIGOT	6F25	40.69 / 40.68			522+43.70		68.75	1°04' .018616 .999827	
					1	SPEC BEVEL 1°13'	6F6	40.91 / 40.88			522+03.02	1°13' DN	68.00	2°17' .039886 .999205	
						SPEC 1-CUT ELBOW		37.53 / 37.14			521+62.14	5°56' DN	66.36	8°13' .144444 .989728	
					1	w/ BEVELED BELL 5°00' 8°13'	6F30 6F6	3.40 / 3.40			521+25.00	8°13' UP	61.00		
						SPEC 1-CUT ELBOW		38.44 / 38.44			521+21.60		61.00	0°00' .000000 1.00000	
					1	7°20'	6F9	2.81 / 2.79			520+83.16	7°20' UP	61.00		
											520+80.37		61.36	-7°20' .128728 .991816	

CONTINUED FROM 6L15

4850.300 3/16" R (340)

(300)

Ameron UTILITY PRODUCTS GROUP

Russian River - Contract #2

LAYOUT DRAWING
STATION 520+80.37 TO STATION 530+63.67

SYMBOL	REVISION	DATE	BY	APPV'D.

DRAWN	VW	2-10-76
CHECKED		
APPV'D.		

2314 6L16.D

60-4-102.230.17

1000-1003 (7/75)

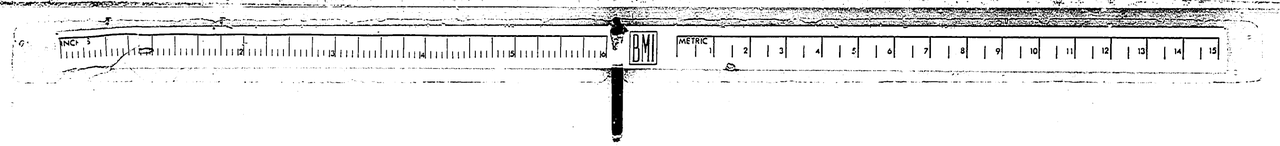

CONTINUED ON 6L18

CONTRACT DRAWING REFERENCE	PIPE SIZE TYPE AND CLASS (JOINT DETAIL REFERENCE)	BID ITEM	UNIT LENGTH	PIECE NO.	NO. REQ'D	DESCRIPTION	DETAIL DWG. REF.	SLOPE HORIZ. DIST.	PLAN LOOKING IN DIRECTION OF LAYING	INV. STATION—READ UP	PULL, BEVEL OR TURN	INV. ELEVATION	SLOPE TANGENT COSINE	PROFILE NOTE: VIEW FROM RIGHT SIDE OF PIPE
60-4-102.211	48 SC 360 3/16 R (340)	031		1799		1797 1798 1799		123.00 123.00		549+89.67		68.94		
				1797	3	STD SECT	S			548+66.68	0°50' DN	68.22	0°20' .005859 .999983	
				1796	1	SPEC BEVEL 3°33'	6F3	40.60 40.59		548+26.09	3°33' DN	67.36	1°10' .020600 .999788	
			+038	1795	1	SPEC w/ 3" O.L. & BEVEL 5°00'	6F7 6F3	41.00 40.86	3" O.L.	548+20 547+85.23	5°00' UP	63.98	.041 .082815 .996588	
				1794 1793	2	STD SECT	S	82.00 82.00		547+03.23		64.36		
			+039	1792	1	SPEC w/ 6" O.L. 1-(68) 1-(624) 8-(68) 8-(623)	6F14	41.00 41.00	6" O.L.	546+65 546+62.24		64.55		
				1791		1786 1787 1788 1789 1790 1791 1780 1781 1782 1783 1784 1785		492.00 491.99						
				1780	12	STD SECT	S			541+70.24	0°47' LT	66.83		
				1779	1	SPEC BEVEL 1-(68) 1-(624) 8-(68) 8-(623) 3°53'	6F3	40.96 40.96		541+46.48	1°52'44" 1°05' LT 3°44' UP 3°53' CB	67.02	-0°16' .004640 .999989	
			+039 +045	1778A 1778	1	SPEC BEVEL w/ 18" M.H. & 6" O.L. 1-(626) 16-(619) 16-(623) 8°50'	6F15 6F31 6F3	40.72 40.62	6" O.L. 18" M.H.	541+29.28 541+20 541+00 540+88.66	3°50' DN	69.86	-4°00' .069926 .997564	
				1777		1774 1775 1776 1777 1767 1768 1769 1770 1771 1772 1773		1025.00 1025.00						
						1760 1761 1762 1763 1764 1765 1766 1753 1754 1755 1756 1757 1758 1759								
				1753	25	STD SECT	S			530+63.67		72.87	-0°10' .002935 .999996	

CONTINUED FROM 6L16

Ameron UTILITY PRODUCTS GROUP

RUSSIAN RIVER - CONTRACT #2

LAYOUT DRAWING
STATION 530+63.67 TO STATION 549+89.67

SYMBOL	REVISION	DATE	BY	APPV'D.

DRAWN	KW	2-10-76
CHECKED		
APPV'D.		

2314 6L17.0

60-4-102.230.18

1000-1003 (7/75)

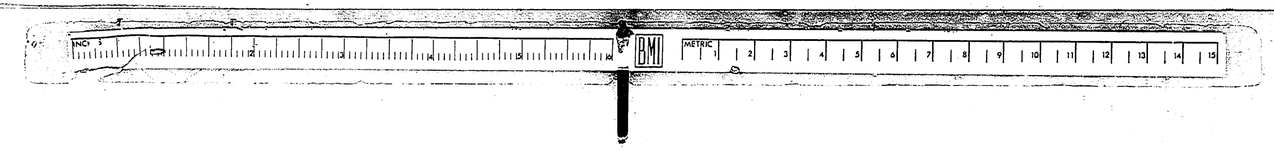

CONTINUED ON 6L19

CONTRACT DRAWING REFERENCE	PIPE SIZE, TYPE AND CLASS	(JOINT DETAIL) REFERENCE	BID ITEM	UNIT LENGTH (BILLING)	PIECE NO.	NO. REQ'D	DESCRIPTION	DETAIL DWG. REF.	SLOPE HORIZ.	SLOPE DIST.	PLAN LOOKING IN DIRECTION OF LAYING	INV. STATION—READ UP	PULL, BEVEL OR TURN	INV. ELEVATION	SLOPE TANGENT COSINE	PROFILE NOTE: VIEW FROM RIGHT SIDE OF PIPE
	60-4-102.21	4'-SC 360 SGH. (360)	081		1855		1851 1852 1853 1854 1855 1845 1846 1847 1848 1849 1850			51.00 50.96		572+85.48		77.30		
					1836	11	STD SECT	S								
				+045 +041	1864A 1864	1	SPEC BEVEL w/ 2" AV. & M.N. 1-(V20) 16-(V19) 16-(V15) 1°02'	4FIS 4FE2 4FE3	0.90 0.89			568+24.53		80.65	-0°25' .00 7413 .999973	
					1842	1	STD SECT	S	1.00 1.00							
				+038	1842	1	SPEC w/ 3" O.C. 1-(V24)	4FE7	1.00 1.00			567+92.63	1°02' ON	80.95		
					1841 1840	2	STD SECT	S	82.00 82.00			567+52.64		80.51		
					1839 1835	5	1835 1836 1837 1838 1839 STD SECT	S	205.00 204.98			567+30				
					1834		1829 1830 1831 1832 1833 1834 1822 1823 1824 1825 1826 1827 1828		533.00 533.00			567+11.64		80.06		
					1822	13	STD SECT	S				566+29.64		79.14	0°37' .010992 .999939	
					1821		1817 1818 1819 1820 1821 1812 1813 1814 1815 1816		40.00 40.00			564+24.66	0°23' UP	76.91		
					1812	10	STD SECT	S							0°15' .003836 .999993	
				+045	1811A 1811	1	SPEC w/ 18" M.H. 1-(V26) 16-(V19) 16-(V25)	4FIO 4FE7	1.00 1.00			553+91.66	0°01' UP	74.97		
					1810		1806 1807 1808 1809 1810 1800 1801 1802 1803 1804 1805		51.01 50.99			554+31.66		78.55	0°12' .003467 .999964	
					1800	11	STD SECT	S				18" M.H. 554+60				
												554+40.66	0°22' ON	78.41		
															0°34' .009907 .999951	
												549+89.67	0°16' UP	68.94	0°20' .005659 .999815	

CONTINUED FROM 6L17

RECEIVED MAY 3 ... UNION ... WATER ...

Ameron UTILITY PRODUCTS GROUP

RUSSIAN RIVER - CONTRACT #2

LAYOUT DRAWING STATION 549+89.67 : TO STATION 572+85.48

SYMBOL | Equation 1: 567+11.64 = 572+85.48

DRAWN	KW	2-18-76	
CHECKED			2314 6L18.1
APPV'D.	APPV'D.		60-4-102.230.19

1000-1003 (7/75)

CONTINUED ON 6L20

CONTRACT DRAWING REFERENCE	PIPE SIZE, TYPE AND CLASS (JOINT DETAIL REFERENCE)	BID ITEM	UNIT LENGTH	PIECE NO.	NO. REQ'D	DESCRIPTION	DETAIL DWG. REF.	SLOPE HORIZ.	DIST.	PLAN LOOKING IN DIRECTION OF LAYING	INV. STATION—READ UP	PULL, BEVEL OR TURN	INV. ELEVATION	SLOPE TANGENT COSINE	PROFILE NOTE: VIEW FROM RIGHT SIDE OF PIPE
60-4-102.212	48SC 320 (320)	031		1889		1885 1886 1887 1888 1889 1880 1881 1882 1883 1884		410.00 410.00			586+78.26		74.48		
				1880	10	STD SECT	S				582+68.26		74.03		
				1879	1	SPEC BEVEL 1°27'	6F4	40.90 40.90			582+27.37	1°27' DN	73.99	0°03' .001077 .999999	
				1878	1	SPEC BEVEL w/ CUT SPIGOT 4°36'	6F4	40.67 40.66			581+86.71	4°36' DN	72.91	1°31 .026558 .999648	
				1877	1	SPEC BEVEL w/ CUT SPIGOT 1°40'	6F4	40.88 40.65			581+46.07	1°40' DN	68.55	6°07' .107291 .994294	
						SPEC 1-CUT ELBOW & BEVELED SPIGOT		11.27 11.17			581+34.90	7°47' UP	67.02	7°47' .136815 .990770	
	48SC 300 3/16 R (340)			1876	1	w/ CUT SPIGOT & 2" P.H. 4°15' 1-[illegible]	6F53 6F4	30.00 30.00		2" P.H.	581+30± 581+04.90	4°15' UP	67.02	0°00' .000000 1.00000	
				1875	1	STD SECT	S	41.00 40.89			580+64.01		70.07		
				1874	1	SPEC BEVEL 4°10'	6F4	40.70 40.59			580+23.43	4°10' DN	73.09	-4°15' .074488 .997237	
				1873		1871 1872 1873 1866 1867 1868 1869 1870 1861 1862 1863 1864 1865		533.00 533.00							
				1861	13	STD SECT	S				574+90.43		73.95		
				1860	1	SPEC BEVEL 1°13'	6F4	41.00 41.00			574+49.43	1°13' UP	74.62	-0°05' .001611 .999999	
				1859 1858 1857	3	STD SECT	S	123.00 122.95			573+26.48	0°58' DN	77.05	-1°23' .024235 .999706	
				1856	1	STD SECT	S	41.00 41.00			572+85.48		77.30	-0°25' .007413 .999973	

CONTINUED FROM 6L18

RECEIVED MAY 8 1976 SONOMA COUNTY WATER AGENCY

Ameron UTILITY PRODUCTS GROUP

Russian River - Contract #2

LAYOUT DRAWING STATION 572+85.48 TO STATION 586+78.26

SYMBOL	REVISION	DATE	BY	APPV'D.

DRAWN	[illegible]	2-6-76
CHECKED		
APPV'D.		

2314 6L19.1

60-4-102.230.20

CONTINUED ON 6L21

CONTRACT DRAWING REFERENCE	PIPE SIZE TYPE AND CLASS (JOINT DETAIL REFERENCE)	BID ITEM	UNIT LENGTH	PIECE NO.	NO. REQ'D	DESCRIPTION	DETAIL DWG. REF.	SLOPE HORIZ.	DIST.	PLAN LOOKING IN DIRECTION OF LAYING	INV. STATION—READ UP	PULL, BEVEL OR TURN	INV. ELEVATION	SLOPE TANGENT COSINE	PROFILE NOTE: VIEW FROM RIGHT SIDE OF PIPE
60-4-102.218	48" SC 360 8GA (340)	031			1	SPEC BEVEL w/ CUT SPIGOT 1°22'	6F4	41.00 40.99			593+90.39		62.00	1°22' .023946 .999713	
					1	SPEC BEVEL w/ CUT SPIGOT 4°11'	6F4	41.00 41.00			593+49.40	1°22' UP	61.02	0°00' .000000 1.00000	
					1	SPEC SHORT & 2" P.H. w/ CUT SPIGOT 1-(118)	6F34	15.90 15.86		2" P.H.	593+08.40 593+06.40	4°11' UP	61.02		
					2	STD SECT w/ CUT SPIGOT	6F1	82.00 81.78			592+92.54		62.18		
					1	SPEC BEVEL 3°54'	6F4	40.72 40.61			592+10.76		68.17	-4°11' .073244 .997328	
						1898 1899 1900 1901		164.00 164.00			591+70.15	3°54' DN	71.15		
					4	STD SECT	S				590+06.15	0°09' UP	71.95	-0°17' .004901 .999988	
						1895 1896 1897		123.00 123.00							
					3	STD SECT	S				588+83.15		72.90		
					1	STD SECT	S	41.00 41.00			588+42.15	0°03' RT	73.22		
					1	SPEC BEVEL 3°04'	6F4	40.89 40.89			588+02.03 588+01.26	3°06'55" 3°04' RT	73.53		
					1	STD SECT	S	41.00 41.00			587+60.26		73.85		
					1	SPEC w/ 3" O.L. 1-(119)	6F7	41.00 41.00		3" O.L.	587+20 587+19.26		74.16		
			+045 +041		1	SPEC w/ 2" AV. TYPE "B" & M.H. 1-(126) 16-(119) 16-(123)	6F15 6F32	41.00 41.00		2" AV. TYPE "B" & M.H. 18"	586+82.26 586+78.26	0°30' DN	74.48	-0°26' .007698 .999970 0°03' .001077 .999999	

CONTINUED FROM 6L19

Ameron UTILITY PRODUCTS GROUP

RUSSIAN RIVER - CONTRACT #2

LAYOUT DRAWING

STATION 586+78.26 TO STATION 593+90.39

SYMBOL	REVISION	DATE	BY	APPV'D.

DRAWN	RW	2-18-76
CHECKED		
APPV'D.		

2314 6L20.0

1000-1003 (7/75)

60-4-102.230.21

CONTINUED ON 6L22

PLAN CALLS FOR STA 606+20.19
OK BY ROP

CONTRACT DRAWING REFERENCE	PIPE SIZE, TYPE AND CLASS	(JOINT DETAIL) REFERENCE	BID ITEM	UNIT LENGTH	PIECE ANCE	NO. REQ'D	DESCRIPTION	DETAIL DWG. REF.	SLOPE HORIZ.	SLOPE DIST.	PLAN LOOKING IN DIRECTION OF LAYING	INV. STATION—READ UP	PULL, BEVEL OR TURN	INV. ELEVATION	SLOPE TANGENT COSINE	PROFILE NOTE: VIEW FROM RIGHT SIDE OF PIPE
				BILLING												
60-4-102.213	48"SC 360 .316" (360)	48"SC 360 .316" (360)	031	+035		1	SPEC BEVEL w/ 8" TURNOUT		10°24'	4 FDS 10 FT		4.00 40.98				
						2	STD SECT			S		82.00 82.00				
						1	STD SECT			S		41.03 41.03				
						1	SPEC BEVEL		6.41	10 FT		40.88 40.83				
						1	STD SECT			S		41.03 41.03				
						1	STD SECT			S		41.00 41.00				
						1	STD SECT			S		41.00 41.00				
							1924 1925 1926 1927 1928 1929 1913 1920 1921 1922 1923 1914 1915 1916 1917 1918					656.00 655.99				
						16	STD SECT			S						
						1	STD SECT			S		41.00 41.00				
							1909 1910 1911 1912					164.00 163.95				
						4	STD SECT			S						
						1	STD SECT w/ CUT SLOPE			6 FT		41.00 40.99				

CONTINUED FROM 6L20

PLAN LOOKING IN DIRECTION OF LAYING	INV. STATION—READ UP	PULL, BEVEL OR TURN	INV. ELEVATION	SLOPE TANGENT COSINE	PROFILE NOTE: VIEW FROM RIGHT SIDE OF PIPE
B"T.O. TYPE "B"	606+20.19		72.21	1°08' 1.00 .999942	
	606+19.19			1°08' 1.00 .999942	
	605+79.21	1°34' LT	70.92		
	604+99.21		70.58		
	604+56.18	1°02' RT	70.41		
	604+15.55	642'47"			
	604+15.35	6.41' RT	70.25		
	603+74.32	1°00' RT	70.08		
	603+33.32		69.91		
	602+92.32		69.75		
	596+36.33		67.08	0°41' 1.00 .999992	
	595+95.33	1°08' LT	66.91		
	594+31.37		62.98		
	593+90.39		63.00	1°02' 1.00 .999978	

6L21

1.02
4.41
1
6.43

Ameron UTILITY PRODUCTS GROUP

Russian River - Contract #2

LAYOUT DRAWING STATION		STATION	
593+90.39	TO	606+20.19	

SYMBOL	REVISION	DATE	BY	APPV'D.

DRAWN	KW	2-9-76	
CHECKED			
APPV'D.			

23/4

6L21:0

60-4-102.230.22

1000-1003 (7/75)

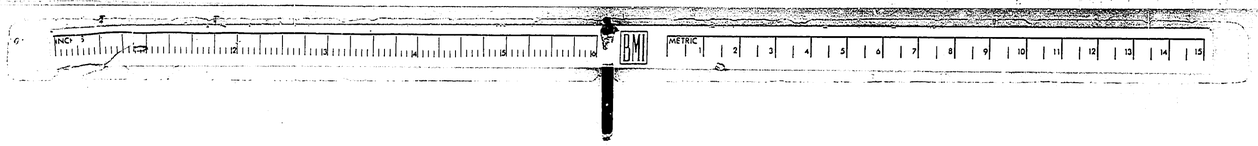

CONTINUED ON 6L23

CONTRACT DRAWING REFERENCE	PIPE SIZE, TYPE AND CLASS (JOINT DETAIL REFERENCE)	BID ITEM	UNIT LENGTH	PIECE NO.	NO. REQ'D	DESCRIPTION	DETAIL DWG. REF.	SLOPE HORIZ.	DIST.	PLAN LOOKING IN DIRECTION OF LAYING	INV. STATION—READ UP	PULL, BEVEL OR TURN	INV. ELEVATION	SLOPE TANGENT COSINE	PROFILE NOTE: VIEW FROM RIGHT SIDE OF PIPE
60-4-102.214	48SC-320 BGA. (320)	031				1968 1969 1970 1971 1963 1964 1965 1966 1967 1958 1959 1960 1961 1962		574.00 574.00			620+13.97		79.76		
					14	STD SECT	S				614+39.97	0°25' DN	78.77	0°06' .001733 .999998	
						1955 1956 1957 1952 1953 1954		246.00 245.99							
					6	STD SECT	S				611+93.98		76.50		
					1	STD SECT	S	41.02 41.02			611+52.96	0°31' KT	76.12		
					1	SPEC BEVEL 1°20'	6F4	40.95 40.95			611+23.53	1°50'37'			
					2	STD SECT	S	82.00 82.00			611+12.01	1°20' LT	75.74	0°31' .009222 .999957	
					1	STD SECT	S	41.00 41.00			610+30.02	0°29' UP	74.99		
			+033		1	SPEC w/ 4" TURNOUT	6F36	41.00 41.00			609+89.02		74.96		
										4" T.O. TYPE 'A'	609+80				
						1941 1942 1943 1944 1945		205.00 205.00			609+48.02		74.94		
					5	STD SECT	S								
					1	SPEC BEVEL 1°46'	6F4	40.87 40.87			607+43.02		74.82	0°02' .000581 1.00000	
			+045		1	SPEC w/ 18" M.H. 1-(16) 16-(19) 16-(23)	6F10 6F32	41.00 40.98		18" M.H.	607+02.15 606+98.15	1°46' DN	74.80		
					1	STD SECT	S	41.00 40.98			606+61.17		73.50		
											606+20.19		72.21	1°48' .031583 .999502	

CONTINUED FROM 6L21

Ameron UTILITY PRODUCTS GROUP

RUSSIAN RIVER - CONTRACT #2

LAYOUT DRAWING
STATION 606+20.19 TO STATION 620+13.97

SYMBOL	REVISION	DATE	BY	APPV'D.

DRAWN	KW	2-19-76
CHECKED		
APPV'D.		

2314 6L22.0

60-4-102.230.23

1000-1003 (7/75)

6L23

CONTINUED ON

CONTRACT DRAWING REFERENCE	PIPE SIZE, TYPE AND CLASS (JOINT DETAIL REFERENCE)	BID ITEM	UNIT LENGTH	PIECE NO.	NO. REQ'D	DESCRIPTION	DETAIL DWG. REF.	SLOPE HORIZ.	DIST.	PLAN LOOKING IN DIRECTION OF LAYING	INV. STATION—READ UP	PULL, BEVEL OR TURN	INV. ELEVATION	SLOPE TANGENT COSINE	PROFILE NOTE: VIEW FROM RIGHT SIDE OF PIPE
60-4-102.214	48 SC 820 BGA (320)	031		1997	1	SPEC BEVEL 4°32'	6F4	41.00 40.87			630+63.32		69.24	4°32' .079268 .996873	
				1996	1	SPEC BEVEL 4°32'	6F4	41.00 41.00			630+22.45	4°32' UP	66.00	0°00 .000 1.00	△1
				1995	1	SPEC SHORT	6F26	25.00 24.92			629+81.45	4°32' UP	66.00		
				1994	1	SPEC BEVEL 4°16'	6F4	40.70 40.57			629+56.53		67.98	-4°32' .079407 .996862	
				1993		1990 1991 1992 1993 1986 1987 1988 1989		328.05 328.05			629+15.96	4°16' DN	71.20		
				1986	8	STD SECT	S							-0°15' .004556 .999990	
				1985		1981 1982 1983 1984 1985		205.00 204.97			625+87.91	0°40' UP	72.70		
				1981	5	STD SECT	S								
			+038	1980	1	SPEC w/ 3' O.L. 1-(629)	6F7	41.00 40.99		3' O.L.	623+82.94 623+80		76.01		
				1979		1976 1977 1978 1979		164.00 163.98			623+41.94		76.67		
				1976	4	STD SECT	S								
			+041 +045	1975A 1975	1	SPEC w/ 2" AV. TYPE "B" & M.H. 1-(626), 16-(619), 16-(623)	6F15 6F32	41.00 40.99		2" AV TYPE "B" & MH.	621+77.96 621+41.96 621+36.97	1°01' DN	79.32 79.98	-0°55' .016149 .999870	
				1974 1973	2	STD SECT	S	82.00 82.00			620+54.97		79.84		
			+038	1972	1	SPEC w/ 3' O.L. 1-(629)	6F7	41.00 41.00		3' O.L.	620+35 620+13.97		79.76	0°06' .001733 .999998	

CONTINUED FROM 6L22

RECEIVED MAY 8 1976 SONOMA COUNTY WATER AGENCY

BILLING							
BID ITEM	UNIT LENGTH	PIECE NO.	NO. REQ'D	DESCRIPTION	DETAIL DWG. REF.	SLOPE HORIZ.	DIST.

Ameron UTILITY PRODUCTS GROUP

RUSSIAN RIVER - CONTRACT #2

LAYOUT DRAWING

STATION 620+13.97 TO STATION 630+63.32

SYMBOL	REVISION	DATE	BY	APPV'D
△1	Correct slope, Tan, Cos.	[illegible]	[illegible]	

DRAWN	[illegible]	2-19-76
CHECKED		
APPV'D		

2314 6L23.1

1000-1003 (7/75)

60-4-102.230.24

CONTINUED ON 6625

60'-4-102.204

45°00'00" (90)

CONTRACT DRAWING REFERENCE	PIPE SIZE, TYPE AND CLASS (JOINT DETAIL) REFERENCE	BID ITEM (BILLING)	UNIT LENGTH (BILLING)	REC'D NO.	NO. REQ'D	DESCRIPTION	DETAIL DWG. REF.	SLOPE HORIZ.	SLOPE DIST.	PLAN LOOKING IN DIRECTION OF LAYING	INV. STATION—READ UP	PULL, BEVEL OR TURN	INV. ELEVATION	SLOPE TANGENT COSINE	PROFILE NOTE: VIEW FROM RIGHT SIDE OF PIPE
		031	+040		1	SPEC w/ 2"AV TYPE A.		6FT			41.00 / 41.00				
						2015 2016 2017 2018 2011 2012 2013 2014					328.00 / 328.00				
					8	STD SECT		S							
					1	STD SECT w/ CUT SPIGOT		6FT			41.00 / 41.00				
						SPEC 1-CUT ELBOW					8.99 / 8.97				
					1	w/ 2" P.V.I. 1-(108) 10°05'		6FT			32.08 / 32.03				
					1	SPEC SHORT		6FT			9.43 / 9.43				
					3	STD SECT		S			123.00 / 123.00				
					1	SPEC BEVEL 1°11'		6FT			40.91 / ~0.91				
						2000 2001 2002 2003					164.00 / 163.95				
					4	STD SECT		S							
					1	SPEC BEVEL 3°04'		6FT			40.78 / 40.77				
					1	STD SECT		S			41.00 / 40.87				

CONTINUED FROM 6623

STATION	PULL, BEVEL OR TURN	INV. ELEVATION	SLOPE TANGENT COSINE	PROFILE NOTE: VIEW FROM RIGHT SIDE OF PIPE
639+38.24		80.29	-0°4' / -.00349 / .999939	
2"AV TYPE A: 638+95.27				
638+92.24	0°31' DN	80.46		
635+64.25		78.92		
2"P.I. 635+23.25		78.78		
635+21.25				
635+14.28	10°05' RT	78.68		
634+82.25		78.53		
634+72.87		78.49		
633+49.82		77.91		
633+08.91	1°11' DN	77.72	0°4' / .00349 / .999939	
631+44.96		73.52		
631+04.20	3°04' DN	72.48	1°25' / .025580 / .999673	
630+63.32		69.24		
			4°32' / .079208 / .996812	

LAYOUT DRAWING
STATION 630+63.32 TO STATION 639+38.24

SYMBOL	REVISION	DATE	BY	APPV'D.

Ameron UTILITY PRODUCTS GROUP

RUSSIAN RIVER – CONTRACT #2

DRAWN	KW	2-19-76
CHECKED		
APPV'D.		

2314 6624.0

60-4-102.230.25

1000-1003 (7/75)

6L25

CONTINUED ON 6L26

CONTRACT DRAWING REFERENCE	PIPE SIZE TYPE AND CLASS (JOINT DETAIL REFERENCE)	BID ITEM	UNIT LENGTH	PIECE NO.	NO. REQ'D	DESCRIPTION	DETAIL DWG. REF.	SLOPE HORIZ.	DIST.	PLAN LOOKING IN DIRECTION OF LAYING	INV. STATION–READ UP	PULL, BEVEL OR TURN	INV. ELEVATION	SLOPE TANGENT COSINE	PROFILE NOTE: VIEW FROM RIGHT SIDE OF PIPE
60-4-102.215	48 SC 320 BGA (330)	031			1	SPEC w/ CCP BELL & w/ 2" PH WSP SPIGOT 1-(628)	6F58	40.69 40.68		2" PH.	646+49.43 646+47.43		75.60		
						2034 2035 2036 2037		164.00 163.99			646+08.75		76.10		
					4	STD SECT WSP	3							-0°42' .012261 .999925	
					1	STD SECT WSP	3	41.00 41.00			644+44.76	0°27' DN	78.11 ✓		
						SPEC w/ FLG'D END & 18" M.H. & 2" O.L.	6F10	16.69 16.69			644+03.76		78.28		
			+045 +½042 +½037		1	1-(626) 16-(619) 16-(623)	6F40			18" MH. 2" O.L.	643+95 643+88.07 643+87.07		78.35		
						48" BUTTERFLY VALVE BY OTHERS		1.25 1.25							
			+½042 +½037		1	SPEC FLG'D END & 2" O.L.	6F39	1.35 1.35		2" O.L.	643+85.82 643+85.07		78.36		
			+045		1	SPEC w/ 18" M.H. 1-(626) 16-(619) 16-(623)	6F10 6F38	41.00 41.00		18" MH.	643+84.47 643+75		78.36		
						2026 2027 2028 2029		164.00 164.00			643+43.47		78.54		
					4	STD SECT WSP	3								
					1	SPEC w/ WSP BELL & CCP SPIGOT w/ 2" PH 1-(628)	6F28 6F79	41.23 41.23		2" PH	641+79.47 641+77.47		79.24		
						2020 2021 2022 2023 2024		205.00 205.00			641+38.24		79.41		
					5	STD SECT	5				639+33.24		80.29	-0°14' .004264 .999999	

CONTINUED FROM 6L24

BILLING

LAYOUT DRAWING
STATION 639+33.24 TO STATION 646+49.43

SYMBOL	REVISION	DATE	BY	APPV'D.

Ameron UTILITY PRODUCTS GROUP

Russian River - Contract #2

DRAWN	RW	2-14-76
CHECKED		
APPV'D.		

2314 6L25.0

60-4-102.230.26

1000-1003 (7/75)

CONTINUED ON 6L27

BID ITEM	UNIT LENGTH	PIECE NO.	NO. REQ'D	DESCRIPTION	DETAIL DWG. REF.	SLOPE HORIZ.	DIST.	PLAN LOOKING IN DIRECTION OF LAYING	INV STATION—READ UP	PULL, BEVEL OR TURN	INV. ELEVATION	SLOPE TANGENT COSINE	PROFILE NOTE: VIEW FROM RIGHT SIDE OF PIPE
031				SPEC 1-CUT ELBOW		6.46 / 6.46			653+03.46		59.93	-0°37' .010926 .999940	
		2054	1	17°11'	6F29	35.15 / 33.46			652+97.00	17°11' UP	60.00		
		2053		SPEC 1-CUT ELBOW w/ 12" PRV. OUTLET & 18" M.H.	6F42	8.97 / 8.54			652+63.54		70.76	-17°49' .321416 .952032	
	+045	2053	1	1-(626) 16-(619) 16-(623) 18°24'	6F41	31.38 / 31.38			652+55.00 / 652+30.00	18°24' DN	73.50		
		2053	1	SPEC w/ WSP BELL & CCP SPIGOT 1-(633) 3.5 FOR FIELD CLOSURE	6F19	41.23 / 41.23		12" PRV 18" M.H.	652+23.62		73.18		
		2054		2049 2050 2051		123.00 / 122.99			651+82.40		72.76		
		2049	3	STD SECT	S								
		2048	1	SPEC BEVEL 1°17'	6F4	41.00 / 41.00			650+59.40		71.49	0°35' .010252 .999947	
		2047		2043 2044 2045 2046 2047		205.00 / 204.98			650+18.40	1°17' UP	71.07		
		2043	5	STD SECT	S								
	+038	2042	1	SPEC w/ 3" O.L. 1-(629)	6F7	41.00 / 41.00		3" O.L.	648+13.42 / 647+80		73.59		
		2041		2039 2040 2041		123.00 / 122.99			647+72.42		74.09		
		2039	3	STD SECT	S								
									646+49.43		75.60	-0°42' .012261 .999925	

CONTINUED FROM 6L25

LINE CONTINUED ON SHEET 6L37

60-4-102.215

4/5C 320 8GA. (320)

CONTRACT DRAWING REFERENCE | PIPE SIZE TYPE AND CLASS (JOINT DETAIL REFERENCE)

BILLING

LAYOUT DRAWING
STATION 646+49.43 TO STATION 653+03.46

SYMBOL	REVISION	DATE	BY	APPV'D.

Ameron UTILITY PRODUCTS GROUP

RUSSIAN RIVER - CONTRACT #2

DRAWN	KW	2-19-76
CHECKED		
APPV'D.		

2314 6L26.0

60-4-102.230.27

1000-1003 (7/75)

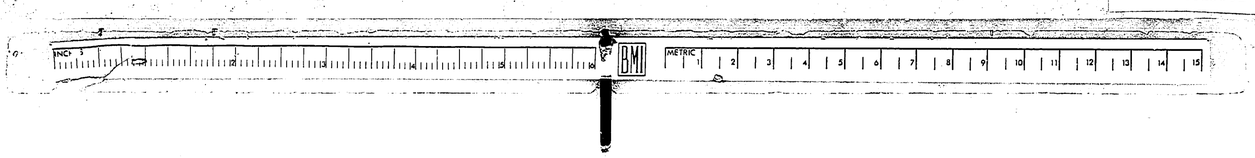

6L27

CONTRACT DRAWING REFERENCE	PIPE SIZE TYPE AND CLASS (JOINT DETAIL REFERENCE)	BID ITEM	UNIT LENGTH	PIECE NO.	NO. REQ'D	DESCRIPTION	DETAIL DWG. REF.	SLOPE HORIZ.	DIST.	PLAN LOOKING IN DIRECTION OF LAYING	INV. STATION–READ UP	PULL, BEVEL OR TURN	INV. ELEVATION	SLOPE TANGENT COSINE	PROFILE NOTE: VIEW FROM RIGHT SIDE OF PIPE
60-4-102.215	48SC 360 SCA (320)	031		2079	1	STD SECT	S	41.00 / 41.00		CONTINUED ON 6L28	663+26.31		73.03		
				2078		2074 2075 2076 2077 2078 2068 2069 2070 2071 2072 2073		451.00 / 451.00			662+85.31	0°30' LT	73.00		
				2068	11	STD SECT	S								
			+045	2067A / 2067	1	SPEC w/ 18" M.H. 1-626 16-619 16-623	6F10 / 6F32	41.00 / 41.00		18" M.H.	658+34.31 / 658+00		72.61		
											657+93.31		72.58		
				2066	1	STD SECT	S	41.00 / 41.00			657+52.31		72.54		
				2065	1	SPEC w/ CCP BELL & WSP SPIGOT	6F25	40.69 / 40.69			657+11.62		72.51		
						SPEC 1-CUT ELBOW		6.62 / 6.62			657+05.00	16°09' DN	72.50	0°03' .000852 1.00000	
				2064	1	16°09'	6F29	33.81 / 32.49			656+72.53		63.06		
						SPEC 1-CUT ELBOW		10.97 / 10.53			656+62.00	15°20' UP	60.00	16°12' .290698 .960250	
	48SC 360 3/16" R (340)			2063	1	w/ 2" P.H. 1-628 15°20	6F49	30.57 / 30.56		2" P.H.	656+33.44 / 656+31.44		59.54		
				2062		2060 2061 2062		123.00 / 122.99							
				2060	3	STD SECT WSP	3							0°52' .015050 .999887	
				2059	1	SPEC BEVEL WSP w/ 2" PH 1-628 1°29'	6F28 / 6F6	41.00 / 41.00		2" PH	655-08.45 / 655+06.45	1°29' UP	57.69		
				2058		2055 2056 2057 2058		164.00 / 163.99			654+67.45		58.14		
				2055	4	STD SECT WSP	3				653+03.46		59.93	-0°37' .010924 .999940	
										CONTINUED FROM 6L26					

Ameron UTILITY PRODUCTS GROUP

Russian River - Contract #2

LAYOUT DRAWING
STATION 653+03.46 TO STATION 663+26.31

SYMBOL	REVISION	DATE	BY	APPV'D.

DRAWN	KW	2-19-76
CHECKED		
APPV'D.		

2314 6L27.0

60-4-102.230.28

1000-1003 (7/75)

CONTINUED ON 6L29

CONTRACT DRAWING REFERENCE	PIPE SIZE, TYPE AND CLASS (JOINT DETAIL REFERENCE)	BID ITEM	UNIT LENGTH	PIECE NO.	NO. REQ'D	DESCRIPTION	DETAIL DWG. REF.	SLOPE HORIZ.	DIST.	PLAN LOOKING IN DIRECTION OF LAYING	INV. STATION—READ UP	PULL, BEVEL OR TURN	INV. ELEVATION	SLOPE TANGENT COSINE	PROFILE NOTE: VIEW FROM RIGHT SIDE OF PIPE
60-4-102.216	48 SC 320 BGA (300)	031		2153		2150 2151 2152 2153 2146 2147 2148 2149		328.00 327.98			693+60.18		75.00		
				2146A	8	STD SECT	S								
			+041 +045	2145A 2145	1	SPEC w/ 2"AV TYPE "B" & M.H. 1-(626) 16-(619) 16-(623)	6F15 6F32	41.00 41.00			690+32.20 689+96.20		78.51	-0°36' .010705 .999943	
				2144		2139 2140 2141 2142 2143 2144 2133 2134 2135 2136 2137 2138		492.00 491.99		2"AV TYPE "B" & M.H. 18"	689+91.20	0°56' DN	78.95		
				2133	12	STD SECT	S							0°20' .005994 .999982	
				2132		2127 2128 2129 2130 2131 2132 2121 2122 2123 2124 2125 2126		492.00 492.00			684+99.21	0°13' UP	76.00		
				2121	12	STD SECT	S								
				2120		2117 2118 2119 2120 2112 2113 2114 2115 2116		369.00 369.00			680+07.21		74.94		
				2112	9	STD SECT	S							0°07' .002149 .999998	
			+045	2111A 2111	1	SPEC w/ 18" M.H. 1-(626), 16-(619), 16-(623)	6F10 6F32	41.00 41.00		18" M.H.	676+38.21 676+01.21	0°04' UP	74.15		
60-4-102.215	(320)			2110		2106 2107 2108 2109 2110 2101 2102 2103 2104 2105 2096 2097 2098 2099 2100 2091 2092 2093 2094 2095 2086 2087 2088 2089 2090 2082 2083 2084 2085		1189.00 1189.00			675+97.21		74.11		
				2082	29	STD SECT	S								
				2081	1	SPEC BEVEL 1°41'	6F5	40.95 40.95			664+08.21 663+67.26	1°41' LT	73.09 73.06		
				2080	1	SPEC BEVEL 4°37'	6F5	40.95 40.95			663+32.05 663+26.31	6°47'45" 4°37' LT	73.03	0°03' .000852 1.00000	

CONTINUED FROM 6L27

Ameron UTILITY PRODUCTS GROUP

RUSSIAN RIVER – CONTRACT #2

LAYOUT DRAWING
STATION 663+26.31 TO STATION 693+60.18

SYMBOL	REVISION	DATE	BY	APPV'D.

DRAWN	KW	2-19-76
CHECKED		
APPV'D.		

2314 6L28.0

60-4-102.230.~~127~~ 29

10-10-100 (7/75)

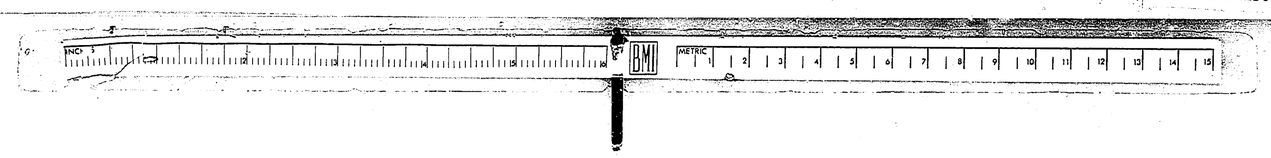

CONTINUED ON 6L30

CONTRACT DRAWING REFERENCE	PIPE SIZE TYPE AND CLASS (JOINT DETAIL REFERENCE)	BID ITEM	UNIT LENGTH	PIECE NO.	NO. REQ'D	DESCRIPTION	DETAIL DWG. REF.	SLOPE HORIZ.	DIST.	PLAN LOOKING IN DIRECTION OF LAYING	INV. STATION—READ UP	PULL, BEVEL OR TURN	INV. ELEVATION	SLOPE TANGENT COSINE	PROFILE NOTE: VIEW FROM RIGHT SIDE OF PIPE
60-4-102.217	4850-820 86A (280)	031		[illegible]	1	SPEC BEVEL 4°01'	6F5	40.71 / 40.71			711+63.83		92.35	0°10' .005002 .999995	
				[illegible]	1	STD SECT	S	41.00 / 40.89			711+23.12	4°01' DN	92.23		
				[illegible]	1	STD SECT w/ CUT SPIGOT	6F1	41.00 / 40.89			710+82.23		89.23		
						SPEC 1-CUT ELBOW w/ 2" P.H. 1-(628)		3.82 / 3.81			710+41.34		86.23	4°11' .073362 .997320	
				[illegible]	1	11°13'	6F50	37.29 / 37.28		2" PH.	710+39.34 / 710+37.53	10°49' RT 3°02' UP 11°13' CB	85.95		
				[illegible]		2190 2191 2192 2193		164.04 / 164.01			710+00.25		85.19		
				[illegible]	4	STD SECT	S							1°10' .020325 .999794	
				[illegible]	2	STD SECT	S	82.02 / 82.02			708+36.24	0°34' UP	81.86	0°35' .010280 .999947	
				[illegible]		2185 2186 2187 2181 2182 2183 2184		287.00 / 287.00			707+54.23	0°22' UP	81.02		
				2181	7	STD SECT	S							0°12' .003660 .999993	
				2180		2179 2180 2174 2175 2176 2177 2178 2169 2170 2171 2172 2173		1107.06 / 1107.05			704+67.23	0°03' DN	79.97		
						2164 2165 2166 2167 2168 2159 2160 2161 2162 2163 2154 2155 2156 2157 2158									
60-4-102.216				[illegible]	27	STD SECT	S				693+60.18	0°52' UP	75.00	0°15' .004485 .999990 / 0°39' .010705 .999943	

CONTINUED FROM 6L28

Ameron UTILITY PRODUCTS GROUP

RUSSIAN RIVER - CONTRACT #2

LAYOUT DRAWING
STATION 693+60.18 TO STATION 711+63.83

SYMBOL	REVISION	DATE	BY	APPV'D.

DRAWN	KW	2-20-76
CHECKED		
APPV'D.		

2314 6L29.0

1000-1003 (7/75)

60-4-102.230.30

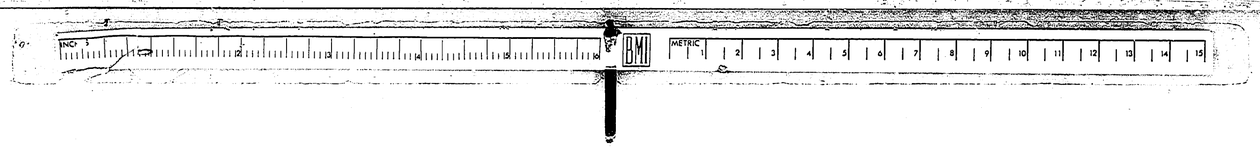

6L30

CONTINUED ON 6L31

CONTRACT DRAWING REFERENCE	PIPE SIZE TYPE AND CLASS (JOINT DETAIL REFERENCE)	BID ITEM	UNIT LENGTH	PIECE NO.	NO. REQ'D	DESCRIPTION	DETAIL DWG. REF.	SLOPE HORIZ.	DIST.	PLAN LOOKING IN DIRECTION OF LAYING	INV. STATION—READ UP	PULL, BEVEL OR TURN	INV. ELEVATION	SLOPE TANGENT COSINE	PROFILE NOTE: VIEW FROM RIGHT SIDE OF PIPE
60-4-102.217	48SC 260 10GA (240)	031				2221 2222 2223		123.03 / 122.87			722+28.47		138.42		
					3	STD SECT	S							2°53' .050317 .998736	
						2218 2219 2220 2214 2215 2216 2217		287.00 / 286.74			721+05.59	0°27' UP	132.24		
					7	STD SECT	S								
	48SC 260 10GA (200)				1	SPEC BEVEL 1°51'	GFS	40.86 / 40.83			718+18.85		120.09	2°25' .042371 .999104	
					2	STD SECT	S	82.00 / 81.77			717+78.02	1°51' DN	118.36		
						2208 2209 2210		123.00 / 122.66			716+96.25		112.25		
					3	STD SECT	S								
	48SC 320 8GA (280)				1	STD SECT	S	41.07 / 40.96			715+73.59		103.08	4°16' .074729 .997219	
					2	STD SECT	S	82.00 / 81.87			715+32.63	1°02' UP	100.02		
					1	SPEC BEVEL 3°03'	GFS	41.00 / 40.93			714+50.76		95.40	3°13' .056435 .998411	
					1	STD SECT	S	41.00 / 41.05			714+09.83	3°03' UP	93.09		
						2198 2199 2200 2201 2202		205.00 / 205.00			713+68.83		92.97		
					5	STD SECT	S								
											711+63.83		92.35	0°10' .003002 .999995	

CONTINUED FROM 6L29

Ameron UTILITY PRODUCTS GROUP

RUSSIAN RIVER - CONTRACT #2

LAYOUT DRAWING
STATION 711+63.83 TO STATION 722+28.47

SYMBOL	REVISION	DATE	BY	APPV'D.

DRAWN	KW	2-20-76
CHECKED		
APPV'D.		

2314 6L30.0

60-4-102.230.31

1000-1003 (7/75)

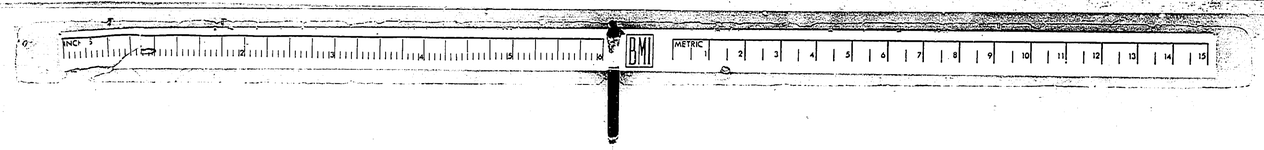

CONTINUED ON 6L32

CONTRACT DRAWING REFERENCE	PIPE SIZE, TYPE AND CLASS (JOINT DETAIL REFERENCE)	BID ITEM	UNIT LENGTH	PIECE NO.	NO. REQ'D	DESCRIPTION	DETAIL DWG. REF.	SLOPE / HORIZ.	DIST.	PLAN LOOKING IN DIRECTION OF LAYING	INV. STATION–READ UP	PULL, BEVEL OR TURN	INV. ELEVATION	SLOPE TANGENT COSINE	PROFILE NOTE: VIEW FROM RIGHT SIDE OF PIPE
60-4-102.217	48 SC 460 10GA (220)	031		2246		2244 2245 2246		123.00 / 122.57			731+48.00		159.22		
				2244	3	STD SECT	S				730+25.43		169.55		
				2243	1	STD SECT	S	41.00 / 40.86			729+84.58	1°08' DN	172.99	-4°49' .084283 .996467	
				2240		2239 2240 2241 2242		164.00 / 163.66							
				2239	4	STD SECT	S				728+20.91		183.53		
	(200)			2238	1	SPEC BEVEL 3°40'	GFS	40.73 / 40.65			727+80.27	3°40' DN	186.15	-3°41' .064393 .997933	
			+044 +045	2237	1	SPEC BEVEL w/ 4" AV TYPE "B" & M.H. 18" 1-(686) 16 (619) 16 (623) w/ C.S. 5°00'	GFS GFS GFS	40.64 / 40.64		4" AV TYPE "B" & M.H. 18"	727+50 / 727+39.63	6°00' DN	186.16	-0°01' .000291 1.00000	
				2236	1	SPEC SHORT	GFS	21.44 / 21.32			727+18.31		183.92		
				2235		2233 2234 2235 2230 2231 2232		246.00 / 244.66							
				2230	6	STD SECT	S				724+73.65		158.26		
	(220)			2229	1	SPEC BEVEL 1°38'	GFS	41.00 / 40.78			724+32.87	1°38' UP	153.98	5°59' .104908 .994542	
				2228		2225 2226 2227 2228		164.00 / 163.53							
	(240)			2225	4	STD SECT	S				722+69.35		141.53		
				2224	1	SPEC BEVEL 1°28'	GFS	41.00 / 40.88			722+28.47	1°28' UP	138.42	4°21' .076124 .997115	
														2°53' .050317 .998736	

CONTINUED FROM 6L30

Ameron UTILITY PRODUCTS GROUP

RUSSIAN RIVER - CONTRACT #2

LAYOUT DRAWING
STATION 722+28.47 TO STATION 731+48.00

SYMBOL	REVISION	DATE	BY	APPV'D.

DRAWN	KW	2-20-76
CHECKED		
APPV'D.		

2314 6L31.0

1000-1003 (7/75)

60-4-102.230.32

6L32

CONTINUED ON 6L33

CONTRACT DRAWING REFERENCE	PIPE SIZE TYPE AND CLASS (JOINT DETAIL REFERENCE)	BID ITEM	UNIT LENGTH	PIECE NO.	NO. REQ'D	DESCRIPTION	DETAIL DWG. REF.	SLOPE HORIZ.	DIST.	PLAN LOOKING IN DIRECTION OF LAYING	INV STATION–READ UP	PULL, BEVEL OR TURN	INV ELEVATION	SLOPE TANGENT COSINE	PROFILE NOTE: VIEW FROM RIGHT SIDE OF PIPE
60-4-102.218	48SC-260 106A (260)	031		2270	1	SPEC BEVEL 3°09'	6FS	41.00 40.96			741+30.49		117.27	-2°29' .043354 .999062	
				2269	1	SPEC BEVEL 2°59'	6FS	40.78 40.58			740+89.52	3°09' UP	119.04	-5°38' .098759 .995159	
				2268		2266 2267 2268 2263 2264 2265		246.00 245.74			740+48.94	2°59' DN	123.05		
				2265	6	STD SECT	S								
				2262	1	SPEC BEVEL 5°30'	6FS	40.71 40.67			738+03.20	0°32' LT	134.44		
											737+64.54	737+62.74 5°56'01"			
				2261	1	STD SECT	S	41.00 40.96			737+62.54	4°54' LT	136.32		
				2260 2259	2	STD SECT	S	82.00 81.91			737+21.58	0°30' LT	138.21	-2°39' .046338 .998928	
				2258		2256 2257 2258 2253 2254 2255		246.00 245.99			736+39.67	0°15' DN	142.01		
60-4-102.217				2253	6	STD SECT	S								
				2252	1	SPEC BEVEL 1°27'	6FS	40.90 40.86			733+93.88		152.29	-2°23' .041802 .999127	
				2251 2250	2	STD SECT	S	82.00 81.99			733+53.02	1°27' DN	154.00		
				2249	1	STD SECT	S	41.07 41.06			732+71.03		155.33	-0°56' .016284 .999807	
				2248	1	STD SECT	S	41.04 41.02			732+29.97	1°00' UP	156.00	-1°56' .033858 .999427	
				2247	1	SPEC BEVEL 2°15'	6FS	41.00 40.96			731+88.95	0°37' UP	157.39	-2°33' .044714 .999002	
											731+48.00	2°15' UP	159.22	-4°49' .084283 .996467	

CONTINUED FROM 6L31

Ameron UTILITY PRODUCTS GROUP

RUSSIAN RIVER – CONTRACT #2

LAYOUT DRAWING STATION 731+48.00 TO STATION 741+30.49

SYMBOL	REVISION	DATE	BY	APPV'D.

DRAWN	KW	2-20-76
CHECKED		
APPV'D.		

2314 6L32.0

60-4-102.230.33

1000-1003 (7/75)

6L33

CONTINUED ON 6L34

CONTRACT DRAWING REFERENCE	PIPE SIZE, TYPE AND CLASS (JOINT DETAIL REFERENCE)	BID ITEM	UNIT LENGTH	PIECE NO.	NO. REQ'D	DESCRIPTION	DETAIL DWG. REF.	SLOPE HORIZ.	DIST.	PLAN LOOKING IN DIRECTION OF LAYING	INV STATION—READ UP	PULL, BEVEL OR TURN	INV ELEVATION	SLOPE TANGENT COSINE	PROFILE NOTE: VIEW FROM RIGHT SIDE OF PIPE
60-4-102.218	48 SC 260 10 GA. (260)	031	+041 +045	[illegible]	1	SPEC BEVEL w/ ~~2 AV~~ TYPE "B" 18" ℄ M.H. 1-(626) 16-(619) 16-(623) 1°32'	6F15 6F52 6F5	40.88 40.88		2" AV TYPE "B" 18" ℄ M.H.	748+11.26 748+00		125.00	0°00' .00000 1.00000	
				2286	1	STD SECT	S	41.00 40.98			747+70.38	1°37' DN	125.00	1°37' .028246 .999601	
				2285		2283 2284 2285		123.03 122.94			747+29.40	0°33' DN	123.84		
				2283	3	STD SECT	S				746+06.46	0°29' UP	119.19	2°10' .037844 .999285	
				2280		2278 2279 2280 2281 2282		205.00 204.91							
				2278	5	STD SECT	S				744+01.54		113.18		
				2277	1	SPEC BEVEL w/ CUT SPIGOT 5°00'	6F5	40.64 40.62			743+60.92	5°37' DN	111.99	1°46' .029321 .999570	
						SPEC 1-CUT ELBOW		39.24 38.92			743+22.00	7°18' UP	107.00	7°18' .128153 .991888	
				2296	1	w/ CUT SPIGOT & 2" PH. 1-(628) 7°18'	6F54	2.02 2.02		2" PH.	743+20.98 743+19.98		107.00		
				2295	1	SPEC ~~SHORT~~ BEVEL 4°42'	6F53 6F5	26.00 26.00			742+93.98	4°42' UP	107.00	0°00' .000000 1.00000	
				2274	1	STD SECT	S	41.00 40.86			742+53.11		110.37		
				2273	1	SPEC BEVEL 2°13'	6F5	40.84 40.90			742+12.41	2°13' DN	113.72	-4°42' .082345 .996627	
				2272 2271	2	STD SECT	S	82.00 81.92			741+30.49		117.27	-2°29 .043354 .999062	

CONTINUED FROM

LAYOUT DRAWING
STATION 741+30.49 TO STATION 748+11.26

SYMBOL	REVISION	DATE	BY	APPV'D.

DRAWN	KW	2-20-76
CHECKED		
APPV'D.		

Ameron UTILITY PRODUCTS GROUP

RUSSIAN RIVER - CONTRACT #2

2314 6L33.0

60-4-102.230.34

1000-1003 (7/75)

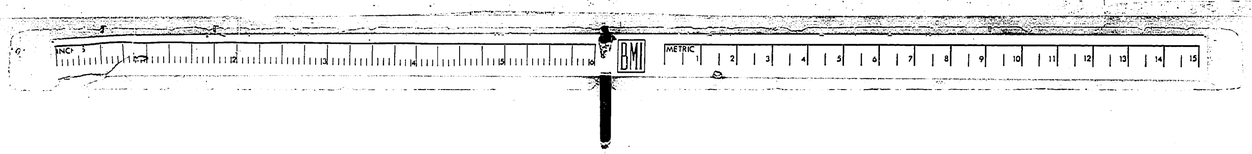

CONTINUED ON 6L35

CONTRACT DRAWING REFERENCE	PIPE SIZE, TYPE AND CLASS (JOINT DETAIL REFERENCE)	BID ITEM (BILLING)	UNIT LENGTH (BILLING)	PIECE NO.	NO. REQ'D	DESCRIPTION	DETAIL DWG. REF.	SLOPE HORIZ.	DIST.	PLAN LOOKING IN DIRECTION OF LAYING	INV STATION—READ UP	PULL, BEVEL OR TURN	INV ELEVATION	SLOPE TANGENT COSINE	PROFILE NOTE: VIEW FROM RIGHT SIDE OF PIPE
60-4-102.218	4/8 SC 260 (260)	031				SPEC 1-CUT ELBOW		38.65 / 37.98			753+29.42		99.36	-12°11' .215877 .977483	
				2307	1	w/ CUT SPIGOT 10°00'	6F11	2.00 / 2.00			752+91.64	10°00' DN	107.52		
				2300		2297 2298 2299 2300		164.00 / 163.88			752+89.65		107.59		
				2299	4	STD SECT	5							-2°11' .038089 .999275	
				2296		2294 2295 2296		123.00 / 122.93			751+25.76	0°12' DN	113.84		
				2294	3	STD SECT	5								
				2293	1	SPEC BEVEL 3°52'	6F5	40.86 / 40.84			750+02.84		118.08	-1°58' .034513 .999405	
				2292	1	SPEC SHORT	6F25	15.21 / 15.20			749+62.00	3°52' LT 0°19' UP	119.49		
				2291	1	SPEC w/ TAPPED HOLE FOR AIR TEST	6F23	41.00 / 40.97			749+53.73 / 749+46.80	3°46'55"	120.10		
				2290	1	SPEC w/ WSP BELL TAPPED FOR AIR TEST & CCP SPIGOT	6F19	41.23 / 41.20			749+05.83		121.73		
				2289	1	SPEC SHORT w/ 2" PH 1-(633) 48" B.S. 1-(628)	6F58	14.94 / 14.93			748+64.63 / 748+62.63		123.38	-2°17' .040000 .999201	
				2288	1	SPEC BEVEL w/ EXTRA CYL FOR FIELD CLOSURE 1°31'	6F5	(40.88) 38.45 / 38.44			748+49.70	0°46' DN	123.98	-1°31' .026584 .999647	
											748+11.26	1°31' DN	125.00	0°00' .000000 1.00000	

CONTINUED FROM 6L33

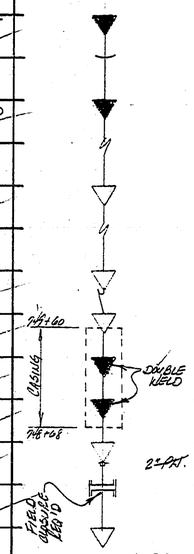

Ameron UTILITY PRODUCTS GROUP

RUSSIAN RIVER - CONTRACT #2

LAYOUT DRAWING
STATION 748+11.26 TO STATION 753+29.42

SYMBOL	REVISION	DATE	BY	APPV'D.

DRAWN	KW	2-20-76
CHECKED		
APPV'D.		

2314 6L34.0

60-4-102.230.35

1000-1003 (7/75)

CONTINUED ON 6636

PIECE NO.	NO. REQ'D	DESCRIPTION	DETAIL DWG. REF.	SLOPE HORIZ.	SLOPE DIST.	PLAN LOOKING IN DIRECTION OF LAYING	INV STATION—READ UP	PULL, BEVEL OR TURN	INV ELEVATION	SLOPE TANGENT COSINE	PROFILE NOTE: VIEW FROM RIGHT SIDE OF PIPE
2327 2328 2329 2330 2331 2332 2333 2334 2335 2336					+10.00 +09.92		764+93.13		113.87		
2322	10	STD SECT	S				760+83.21		105.81		
2321	1	STD SECT	S		4.08 4.07		760+42.14	19°07' LP	105.00	1°07' .019657 .980857	
2320		2314 2315 2316 2317 2318 2319 2320 2307 2308 2309 2310 2311 2312 2313			574.00 574.00		754+68.14		105.00		
2307	14	STD SECT	S				754+27.14		105.00	0°00' .000000 1.000000	
2306	1	STD SECT	S		41.00 41.00		753+90.00	19°08' DW	105.00		
		SPEC 1-CUT ELBOW			37.14 37.14		752+51.03		102.98		
2305	1	w/CUT SPIGOT 19°48'	UFS11		3.16 2.97		753+69.68		97.68	19°48' .939108 .940857	
2304	1	SPEC SHORT w/CUT SPIGOT	UFS1		18.46 17.35		753+65.91	19°48' UP	96.00		
		SPEC 1-CUT ELBOW			4.97 4.68	6" O.D. TYPE A: 753+48.27 =	753+60.57		96.00	0°00' .000000 1.000000	
2303	1	w/CUT SPIGOT & 6" O.D. TYPE "A" △ 19°40'	UFS6		18.73 18.73		753+45.00	12°11' UP	96.00		
		SPEC w/ 2 nr 1-CUT ELBOWS			1.27 1.27		753+34.77	{8°29' LT 8°17' CB	98.21		
		12°11'			10.47 10.23		753+29.42		99.36	-12°11' .975677 .975677	
2302	1	8° CUT SPIGOT 8°17'	UFS5		5.47 5.35						

CONTINUED FROM 6634

60-4-102.230 (2nd)

60-4-102.230 (1st)

BID ITEM: 03 | UNIT LENGTH: +030

CONTRACT DRAWING REFERENCE

PIPE SIZE, TYPE AND CLASS

(JOINT DETAIL) REFERENCE

LAYOUT DRAWING
STATION 753+29.42 TO STATION 764+93.13

△ Correct angle
SYMBOL

Ameron UTILITY PRODUCTS GROUP

Russian River - Contract #2

DRAWN LW 5-23-76

CHECKED

2314 6635.1

60-4-102.230.36

RECEIVED MAY 8 ...WATER AGE...

1000-1003 (7/75)

CONTINUED ON 3L1

CONTRACT DRAWING REFERENCE	PIPE SIZE, TYPE AND CLASS	(JOINT DETAIL) REFERENCE	BID ITEM	UNIT LENGTH	PIECE NO.	NO. REQ'D	DESCRIPTION	DETAIL DWG. REF.	SLOPE HORIZ.	SLOPE DIST.	PLAN LOOKING IN DIRECTION OF LAYING	N/H STATION—READ UP	PULL, BEVEL OR TURN	N/H ELEVATION	SLOPE TANGENT COSINE	PROFILE NOTE: VIEW FROM RIGHT SIDE OF PIPE
				BILLING												
			031				1-(2SD) 48" B.S. 12" WIDE SPEC SHORT w/ EXTRA C&L FOR FIELD CLOSURE	6FS9			FIELD MARKING (SEE D.D.)	775+41.48	0°46' UP	114.81	0.681 .000286 .999991	
							2353 2354 2355 2356 2346 2350 2351 2352					775+18.13		114.98		
							2345 2346 2347 2348 2340 2341 2342 2343 2344									
					17		STD SECT	5								
				+04.5		1	SDEC w/ 18" M.H. 1-(2ND) 16-(6A) 16-(2SD)	6FD1 6FS9	41.00 41.00		18" M.H.	768+21.13 768+00		114.16		
							2336 2337 2338 2332 2333 2334 2335					767+80.13		114.12		
									287.00 287.00							
					7		STD SECT	5							0.923 .000887 1.00000 1.083 .000887 1.00000	
											CONTINUED FROM 6L35	764+93.13	100' ON	113.87		

Ameron UTILITY PRODUCTS GROUP

Russian River - Contract #2

DRAWN EW 2-24-76

CHECKED

APP'V'D.

LAYOUT DRAWING STATION 764+93.13 TO STATION 775+41.48

SYMBOL	REVISION	DATE	BY	APP'V'D.

23/4 6L36

60-4-102.230.37

1000-1003 (7/75)

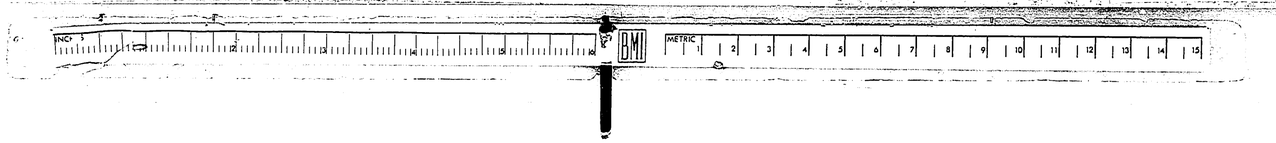

GL27

FLAG	ITEM NO.	QUANTITY THIS DWG.	DESCRIPTION	MATERIAL SPECIFICATION

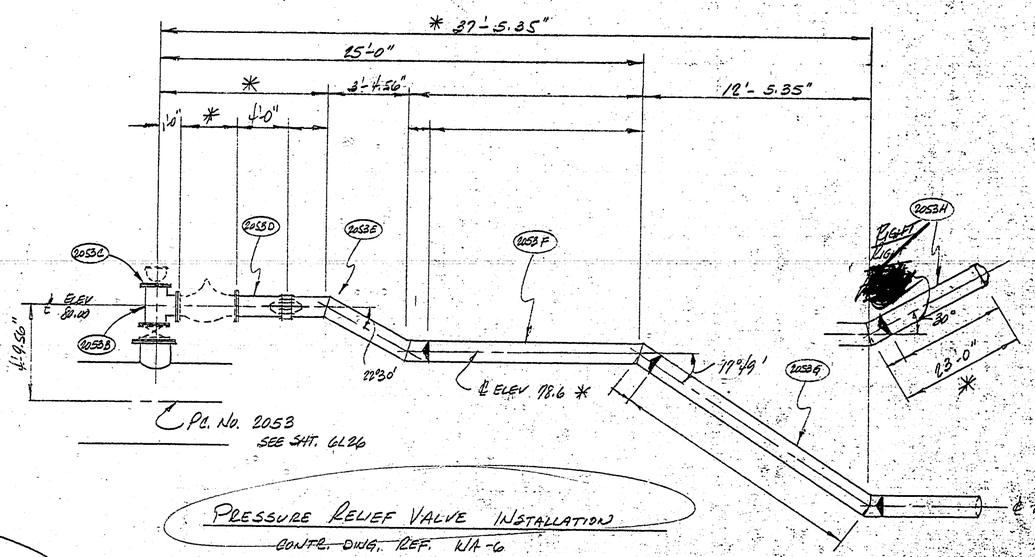

℄ Pc. No. 2053
SEE SHT. GL26

PRESSURE RELIEF VALVE INSTALLATION
CONTR. DWG. REF. WA-6
LINE 0+40

* CONTRACTOR TO VERIFY OR SUPPLY DIMENSIONS PRIOR TO MANUFACTURE

CANNOT CHECK UNTIL ADDITIONAL INFO. IS SUPPLIED

Pc. No.	DETAIL SHEET
2053 B	GFH3
2053 C	GFH4
2053 D	GFH3
2053 E	GFH5
2053 F	GFH6
2053 G	GFH7
2053 H	GFH8

SHIP LOOSE ITEMS

1- (#18) 12" GASKET STD
16- (#20) 1⅛ BOLTS C&D
16- (#21) 1⅛ NUTS C&D
1- (#22) 12" FC
2- (#23) ¾" STUDS C&D
4- (#24) ¾" NUTS C&D

7.

CHANGE ORDERS	SYMBOL	REVISION	DATE	BY	APP'D

UNLESS OTHERWISE SPECIFIED DIMENSIONS ARE IN INCHES
TOLERANCES

FRACT.	.X	.XX	.XXX	ANGLE
±	±	±	±	±

DWG. SCALE

Ameron PIPE PRODUCTS GROUP

RUSSIAN RIVER - CONTRACT #2

DRAWN	TW	2-24-76
CHECKED		
APP'V'D.		

23/4 GL27.0

60-4-102.230.38

1000-1000 (8/70)

CONTRACT # 2

OFFICE SET

CONTINUED ON 342

CONTRACT DRAWING REFERENCE	PIPE SIZE, TYPE AND CLASS	(JOINT DETAIL) REFERENCE	BID ITEM (BILLING)	UNIT LENGTH (BILLING)	PIECE NO.	NO. REQ'D	DESCRIPTION	DETAIL DWG. REF.	SLOPE HORIZ.	SLOPE DIST.	PLAN (LOOKING IN DIRECTION OF LAYING)	INV. STATION—READ UP	PULL, BEVEL OR TURN	INV. ELEVATION	SLOPE TANGENT COSINE	PROFILE NOTE: VIEW FROM RIGHT SIDE OF PIPE
					439		L37 L31 L39			123.00 129.96		783+34.11		123.3		
					437	3	STD SECT	5				782+15.15		126.8	-.1023 .004233 .994707	
					436A		SDEC 1-OUT ELBOW 15°49'	5FD1		38.26 38.25		781+80.90	15°49' LT 15°49' DN 15°49' 2D	127.2		
	+041 +045				436	1	W/1-OUT SPIGOT, 1-2½ 15°49' 6"Ø, TYPE E 16-B(B)	5FD1		2.64 2.63		781+76.90				
					435	1	STD SECT	5		41.00 41.00		781+74.22		127.2		
					434		L33 L31 L32 L33 L34			205.00 204.99		781+33.22		126.9		
					430	5	STD SECT	5								
					429	1	SDEC SEWER 2°08'	5FD1		49.50 49.80		778+25.22		125.3	0°26' .007719 .999970	
					428 427	2	STD SECT	5		82.00 81.87		778+89.43	2°08' DN	125.0		
					426	1	SDEC SEWER 2°26'	5FD1		41.00 40.98		778+05.56		120.3	5°15' .056717 .998392	
					425	1	SDEC W/ CLO ELL x WSD SWEL	3FB		13.00 18.00		777+64.63	2°26' UP	118.0 117.8		
					424		L31 L32 L33 L34			164.30 163.95		777+46.63		117.7		
					421	4	STD SECT W/ TAP FOR AIL TEST	3FD1A								
					420	1	STD SECT W/ TAP FOR AIL TEST	3FD1A		41.17 41.17		775+82.63		115.4		
												775+41.43		114.8	0°49' .010260 .999581	

777+61.43 — CHANGE — DOUBLE WELD JOINTS — 775+51.43 — B.S. JOIN

CONTINUED FROM

60-4-102.230.39 — 33 Lead Pc.

A.O.K. EXCEPT 3F7.0, 3F16A.0 } AS NOTED

APPROVED
By ..... Date 1-6-76
SONOMA COUNTY WATER AGENCY

LAYOUT DRAWING
STATION 775+41.43 TO STATION 783+34.11

SYMBOL	REVISION	DATE	BY	APPV'D.

Ameron UTILITY PRODUCTS GROUP

RUSSIAN RIVER - CONTRACT # 2

DRAWN	LW	12-9-75
CHECKED		
APPV'D.		

2265 3L1.0

60-4-102.230.39

RECEIVED DEC. 22 1975 SONOMA COUNTY WATER AGENCY

PRELIMINARY DEC 12 1975

1000-1003 (7/75)

CONTINUED ON 3L3

CONTRACT DRAWING REFERENCE	PIPE SIZE, TYPE AND CLASS (JOINT DETAIL) REFERENCE	BID ITEM	UNIT LENGTH	PIECE NO.	NO. REQ'D	DESCRIPTION	DETAIL DWG. REF.	SLOPE HORIZ.	SLOPE DIST.	PLAN LOOKING IN DIRECTION OF LAYING	INV. STATION—READ UP	PULL, BEVEL OR TURN	INV. ELEVATION	SLOPE TANGENT COSINE	PROFILE NOTE: VIEW FROM RIGHT SIDE OF PIPE
		BILLING													
	60"I			452	1	SPEC BEVEL BELL 2°25'	322				40.82 40.80				
				451	1	STD SECT LW	↓				41.00 40.98				
				450A		SPEC 1-CUT ELBOW w/ 2" AV TYPE "B" 9°11'	325				27.52 27.52				
		+DWI +DWS		450	1	# BEVELED BELL 9°07' 1-(5B) 16-(9B) 16-(8B)	327 322				13.00 12.82				
				449	1	STD SECT LW	↓				41.00 40.64				
						SPEC w/ 22a 1-CUT					6.83 6.74				
						ELBOWS 9°25'					25.00 25.00				
				448	1	9°10'	326				9.82 9.69				
				447	1	STD SECT LW	↓				41.00 40.68				
						SPEC 1-CUT ELBOW w/ CUP SPIGOT 2					15.02 14.83				
				446	1	WELD-BELL 9°07'	325				25.89 25.89				
				445		LW1 LW2 LW3 LW4 LW5					205.00 205.00				
60'-4"-102.230	48.50 LBS 10GA (2440)			441	6	STD SECT	5								
				440	1	SPEC BEVEL 1°15'	321				41.00 41.00				

CONTINUED FROM 3L1

PLAN STATION—READ UP	PULL, BEVEL OR TURN	INV. ELEVATION	SLOPE TANGENT COSINE
788+69.50	2°55' DN	120.0	
788+28.50		121.3	-1°50' .032154 .999482
787+87.52	2°07' DN	122.6	
787+83.52			0°16' .004878 .000012
787+60.00	9°11' DN	122.5	
787+47.18		120.4	
787+06.74		118.6	6°27' .106667 .994314
787+00.00	9°27' UP	112.5	
786+75.00	9°10' UP	112.5	0°00' 1.00000 1.00000
786+65.31		114.1	
786+24.53		120.6	-9°10' .161545 .987202
786+10.00	9°07' DN	123.0	
783+84.11		123.0	
783+73.11		123.3	-0°03' .001104 .999999
783+38.11	1°19' UP	123.3	-1°23' .024233 .999707

Ameron UTILITY PRODUCTS GROUP

Russian River - Contract #2

LAYOUT DRAWING
STATION 783+38.11 TO STATION 788+69.50

SYMBOL	REVISION	DATE	BY	APPV'D.

DRAWN	LW	12-9-75	
CHECKED			
APPV'D.			

2265 3L2.0

60-4-102.230.40

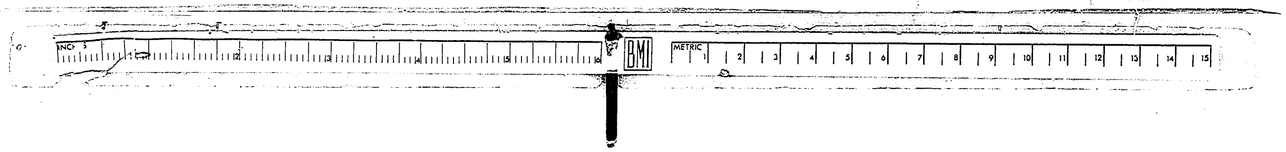

CONTINUED ON 3L4

CONTRACT DRAWING REFERENCE	PIPE SIZE, TYPE AND CLASS (JOINT DETAIL REFERENCE)	BID ITEM	UNIT LENGTH	PIECE NO.	NO. REQ'D	DESCRIPTION	DETAIL DWG. REF.	SLOPE HORIZ.	DIST.	PLAN LOOKING IN DIRECTION OF LAYING	INV STATION—READ UP	PULL, BEVEL OR TURN	INV ELEVATION	SLOPE TANGENT COSINE	PROFILE NOTE: VIEW FROM RIGHT SIDE OF PIPE
60-4-102.220	48 PT 260 10GA (240)	031		467		465 466 467		120.00 119.82			794+49.95		136.9		
				465	3	STD SECT	6								
				464	1	STD SECT	6	40.00 40.00			793+30.13		130.3	3°08' .054742 .998505	
				463	1	STD SECT	6	40.00 39.98			792+90.13	1°08' UP	128.2		
				462	1	SPEC W/ CUT SPIGOT	3F12	40.00 39.97					126.8		
			+045	461A		SPEC 1-CUT ELBOW w/ 18" MANHOLE 18°08'	3F22	10.19 10.18		18" M.H.	792+10.78 792+05.00		125.4	2°00' .035011 .999388	
				461	1	CCP BELL x WSP SPIGOT 1-(318) GASK 16-(313) BOLTS 16-(314) NUTS	3F11	4.17 3.92			792+00.00	18°08' DN	125.0		
						SPEC 1-CUT ELBOW		27.78 26.08			791+96.08		123.6	20°08' .366667 .938876	
				460	1	20°06'	3F10	13.93 13.93			791+70.00	20°06' UP	114.0		
	48 SC 265 10GA (240)			459		456 457 458 459		164.00 164.00			791+56.07		114.0		
				456	4	STD SECT LW.	4								
				455B 455A		1-(39) FC 4-(315) NUTS 2-(312) STUDS	3F9	41.00 41.00			789+92.07		113.9		
			+036	455	1	SPEC w/ 6" B.O. TYPE A	3F8			6" B.O. TYPE "A"	789+60			0°01' .000399 1.00000	
				454	1	SPEC BEVEL BELL 4°17'	3F2	41.00 40.89			789+51.07	4°17' UP	113.9		
				453	1	STD SECT LW	4	41.00 40.89			789+10.19		117.0	-4°15' .074459 .997239	
											788+69.30	2°25' DN	120.0	-1°50' .032195 .999482	

CONTINUED FROM 3L2

Ameron UTILITY PRODUCTS GROUP

RUSSIAN RIVER - CONTRACT #2

LAYOUT DRAWING
STATION 788+69.30 TO STATION 794+49.95

SYMBOL	REVISION	DATE	BY	APPV'D.

DRAWN	KW	12-9-75
CHECKED		
APPV'D.		

2265 3L3.0

60-4-102.230.41

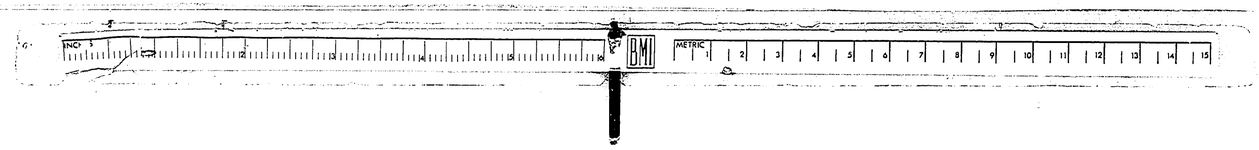

CONTINUED ON 325

BID ITEM	UNIT LENGTH	PIECE NO.	NO. REQ'D	DESCRIPTION	DETAIL DWG. REF.	SLOPE HORIZ.	SLOPE DIST.	PLAN LOOKING IN DIRECTION OF LAYING	INV STATION—READ UP	PULL, BEVEL OR TURN	INV ELEVATION	SLOPE TANGENT COSINE	PROFILE NOTE: VIEW FROM RIGHT SIDE OF PIPE
		508A	1	1-BELL REDUCER 18"ØBELL X 15"ØSPIGOT	3F13			4" AV. TYPE B	810+71.64		199.6	-.198' .0559391 .9984245	
031	+000 +045	508	1	45DEG BEVEL 4"-"AV TYPE B"	3F13 3F1	22.96 28.45			810+55.04				
		507 506	2	STD SECT	6	80.00 76.95			810+48.69	3°26' DN	199.9	.9906' .0286241 .9978226	
		505		502 503 504 505 506 507 508 509 510 511		400.00 396.03			809+68.74	0°57' DN	197.0		
		496	10	STD SECT	6				805+69.81		195.6	.8928' .0525214 .9965571	
		495	1	STD SECT	6	80.01 59.95			805+29.36	0°14' UP	173.5		
		494		490 491 492 493 494		240.00 234.71							
		489	6	STD SECT	6				802+89.65		161.7	.2969' .0473233 .9988980	
		488	1	STD SECT	6	60.04 59.99			802+49.68	0°38' UP	159.7	.2011' .0381163 .9992772	
		487	1	STD SECT	6	60.06 60.03			802+09.68	1°08' UP	158.2		
		486		478 484 485 486 487 488 489 490 491 492		320.00 319.95							
		479	8	STD SECT	6				798+89.68	9°57' DN	152.3	.1903' .0153816 .9998831	
		478		468 469 470 471 472 473 474 475 476 477		440.00 439.95							
		468	11	STD SECT	6				794+49.95	1°08' DN	136.9	.2990' .0852011 .9993855	
												.8908' .0547423 .9985103	

CONTINUED FROM 323

CONTRACT DRAWING REFERENCE

PIPE SIZE, TYPE AND CLASS

(JOINT DETAIL) REFERENCE

Ameron UTILITY PRODUCTS GROUP

Russian River - Contract #2

LAYOUT DRAWING
STATION 795+05.25 TO STATION 810+71.64

SYMBOL	REVISION	DATE	BY	APPV'D.

DRAWN KW 12-10-73
CHECKED
APPV'D.

2265 324.0

60-4-102.230.42

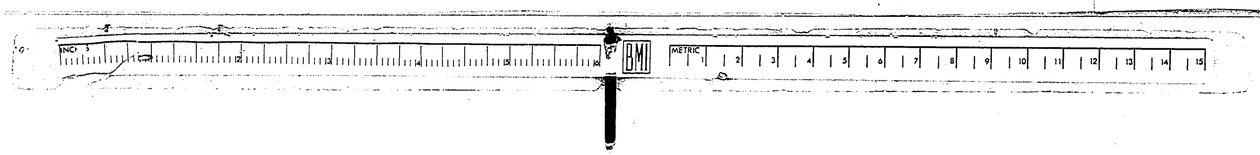

CONTINUED ON 326

CONTRACT DRAWING REFERENCE	PIPE SIZE, TYPE AND CLASS	(JOINT DETAIL) REFERENCE	BID ITEM	UNIT LENGTH	PIECE NO.	NO. REQ'D	DESCRIPTION	DETAIL DWG. REF.	SLOPE HORIZ.	SLOPE DIST.	PLAN LOOKING IN DIRECTION OF LAYING	INV STATION—READ UP	PULL, BEVEL OR TURN	INV ELEVATION	SLOPE TANGENT COSINE	PROFILE NOTE: VIEW FROM RIGHT SIDE OF PIPE
			BILLING													
	60-4-101.221		031				SPEC 1- JNT ELBOW w/ BEVEL BELL			32.28 32.15		816+42.16 816+10.00	1°19' LT (10°38' UP 4°35' LT 11°35' DN	177.8 172.0	10°21' .181525 .983310	
	48 SCH 200 (DR 21) (160) = 1/2				522	1	1°19' 11°35'	3F15 3F2		8.65 8.65						
					521	1	SPEC w/ 20D SPIGOT & WSD BELL	3F14		41.23 41.23		816+01.35 815+60.13		172.1 172.3		
					520	1	STD SECT	5		41.00 41.00		815+19.13		172.6	-0°21' .006066 .999982	
					519	1	STD SECT	5		41.06 41.06		814+78.07	1°01' UP	172.8	-1°28' .025686 .999670	
					518	1	SPEC BEVEL 2°18'	3F1		41.00 40.99		814+37.08	2°18' UP	172.9		
					517		516 515 514 517			164.00 163.64						
					516	4	STD SECT	5				812+78.44		184.7	-3°46' .066032 .997827	
					513	1	SPEC BEVEL 2°52'	3F1		40.79 40.70		812+32.74	2°52' DN	187.4		
					512	1	STD SECT	5		41.00 40.92		811+92.01		192.1	-6°38' .116510 .993281	
					511	1	SPEC BEVEL 4°12'	3F1		40.69 40.42		811+51.59	4°12' DN	196.8	-2°26' .042493 .999098	
	48 PT 200 (DR 21) (160) = 1/2				510	1	STD SECT	6		40.00 39.96		811+11.63	1°08' DN	198.5		
					509	1	STD SECT	6		40.00 39.69		810+71.67		199.4	-1°18' .022691 .999743	
											CONTINUED FROM 324					

Ameron UTILITY PRODUCTS GROUP

RUSSIAN RIVER - CONTRACT #2

LAYOUT DRAWING
STATION 813+11.04 TO STATION 816+42.16

SYMBOL	REVISION	DATE	BY	APPV'D.

DRAWN	LW	6-10-75	
CHECKED			
APPV'D.			

2065 365.0

60-4-102.230.43

CONTINUED ON 3L7

CONTRACT DRAWING REFERENCE	PIPE SIZE, TYPE AND CLASS	(JOINT DETAIL) REFERENCE	BID ITEM	UNIT LENGTH	PIECE NO.	NO. REQ'D	DESCRIPTION	DETAIL DWG. REF.	SLOPE HORIZ.	DIST.	PLAN LOOKING IN DIRECTION OF LAYING	INV. STATION—READ UP	PULL, BEVEL OR TURN	INV. ELEVATION	SLOPE TANGENT COSINE	PROFILE NOTE: VIEW FROM RIGHT SIDE OF PIPE
60-4-102.221	48 SC 260 10GA.	(160)	031		544	1	STD SECT LW	4	41.00 / 40.39			825+35.18		295.9	9°52' .173971 .985202	
					543	1	SPEC BEVEL 2°06'	3F2	40.84 / 39.95			824+94.79	2°06' DN	288.9		
					542	1	STD SECT LW	4	41.00 / 40.11			824+54.84		280.4	11°58' .212086 .978241	
		(80)			541	1	SPEC BEVEL BELL 2°28' w/ 2" PASSHOLE 1-(337)	3F16A 3F2	41.06 / 40.50		2" P.H.	824+14.73 / 824+12.73	2°28' UP	271.9	9°30' .167317 .986290	
		(100)			540		536 537 538 539 540 531 532 533 534 535	3F16A	410.00 / 405.47			823+74.24	0°58' UP	265.1		
		(120)			531	10	STD SECT LW. 1-(337)	4			2" P.H.	820+89.76			8°31' .014987 .988963	
		(140)			530	1	SPEC BEVEL BELL 2°53'	3F2	41.00 / 40.80			819+68.76	2°53' UP	204.4		
		(160)			529		526 527 528 529		164.00 / 163.21			819+27.96		200.4		
		(180)			526	4	STD SECT LW	4							5°37' .098475 .995186	
					525	1	SPEC BEVEL BELL 2°02' w/ 2" PASSHOLE 1-(337)	3F16A 3F2	41.06 / 40.98		2" PH	817+64.75 / 817+62.75	2°02' UP	184.3	3°35' .062723 .998039	
					524	1	STD SECT LW.	4	41.00 / 40.96			817+23.77	1°08' UP	181.7		
							SPEC 1-CUT ELBOW		37.84 / 37.81			816+82.81		180.0	2°27' .042886 .999082	
					523	1	7°50'	3F16	2.89 / 2.84			816+45.00	7°50' DN	178.4		
												816+42.16	1°19' LT	177.8	10°17' .181585 .983910	

CONTINUED FROM 3L5

530 31 32 33 34 35 36 37 38 39 40 41 42

LAYOUT DRAWING
STATION 816+42.16 TO STATION 825+35.18

SYMBOL	REVISION	DATE	BY	APPV'D.

Ameron UTILITY PRODUCTS GROUP

RUSSIAN RIVER - CONTRACT #2

DRAWN	KW	12-10-75
CHECKED		
APPV'D.		

2265 3L6.0

60-4-102.230.44

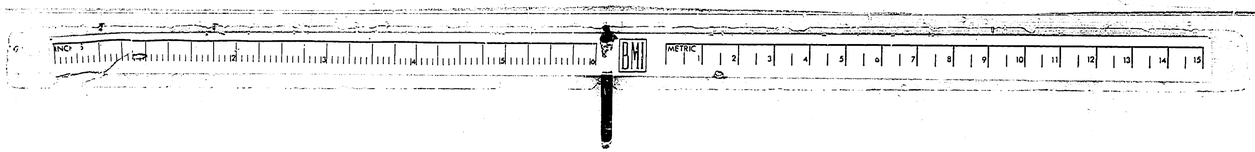

CONTINUED ON —

3.4
6
26

CONTRACT DRAWING REFERENCE	PIPE SIZE TYPE AND CLASS (JOINT DETAIL) REFERENCE	BID ITEM (BILLING)	UNIT LENGTH (BILLING)	PIECE NO.	NO. REQ'D	DESCRIPTION	DETAIL DWG. REF.	SLOPE HORIZ. DIST.	PLAN LOOKING IN DIRECTION OF LAYING	INV STATION–READ UP	PULL, BEVEL OR TURN	INV. ELEVATION	SLOPE TANGENT COSINE	PROFILE NOTE: VIEW FROM RIGHT SIDE OF PIPE
						44-(.314) BOLTS 1-(.319) GASK 44-(.317) NUTS								
						36" BUTTERFLY VALVE (BY OTHERS)		1.00 1.00		826+55.28		℄ 300.5		
		031		548A		SPEC w/ 36" TEE w/ EXTRA CYL. INCLUDED FOR FIELD CLOSURE	3F20	4.00 4.00		826+54.23		℄ 300.5		
			+032 +043	548	1	& FLANGED END & 4" AV TYPE 'A'	3F19	(9.66) 7.45 7.45		826+50.23	90°00' RT	℄ 300.5 298.5		
				547	1	SPEC SHORT	3F18	26.21 26.21		826+42.83		298.5		
				546	1	STD SECT LW.		41.00 41.00		826+16.62		298.5		
						SPEC 1-CUT ELBOW		25.62 25.62		825+75.62		298.5	0°00' .00000 1.00000	
				545	1	9°52'	3F17	15.04 14.82		825+50.00	9°52' DN	298.5		
										825+35.18		295.9	9°52' .173971 .985202	

CONTINUED FROM 366

60-4-102.221

(60) = 106A

4BSC 260 (60) = 106A

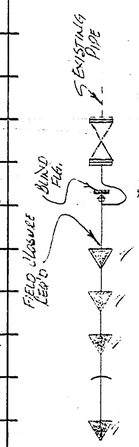

Ameron UTILITY PRODUCTS GROUP

RUSSIAN RIVER - CONTRACT #2

LAYOUT DRAWING
STATION 825+35.18 TO STATION 826+55.28

SYMBOL	REVISION	DATE	BY	APPV'D.

DRAWN	KW	12-10-75
CHECKED		
APPV'D.		

2265 367.0

60-4-102.230.45

1000-1003 (7/75)

FLAG	ITEM NO.	QUANTITY THIS DWG.	DESCRIPTION	MATERIAL SPECIFICATION
	69, 648 64	—	49.875 O.D. CYLINDERS	

STANDARD SECTIONS w/ CUT SPIGOT (SEE SHT. 20)

Pc. No.	LAYOUT REF.	Pc. No.	LAYOUT REF.	Pc. No.	LAYOUT REF.
1896	6L3				
1908	6L21				
2010	6L24				
2195	6L29				
1903	6L20				
1904	6L20				

CHANGE ORDERS	SYMBOL	REVISION	DATE	BY	APPV'D

UNLESS OTHERWISE SPECIFIED DIMENSIONS ARE IN INCHES
TOLERANCES

FRACT.	.X	.XX	.XXX	ANGLE
±	±	±	±	±

DWG. SCALE

Ameron PIPE PRODUCTS GROUP

RUSSIAN RIVER - CONTRACT # 2

DRAWN	KW	3-2-76	
CHECKED			2814
APPV'D			

60-4-102.230.46

1000-1000 (8/70)

FLAG	ITEM NO.	QUANTITY PER DWG.	DESCRIPTION	MATERIAL SPECIFICATION
	–	–	41.875" O.D. CYL.	

CLASS 300 - 7/16" R (6F8)
CLASS 440 - 4GA. (6F9)

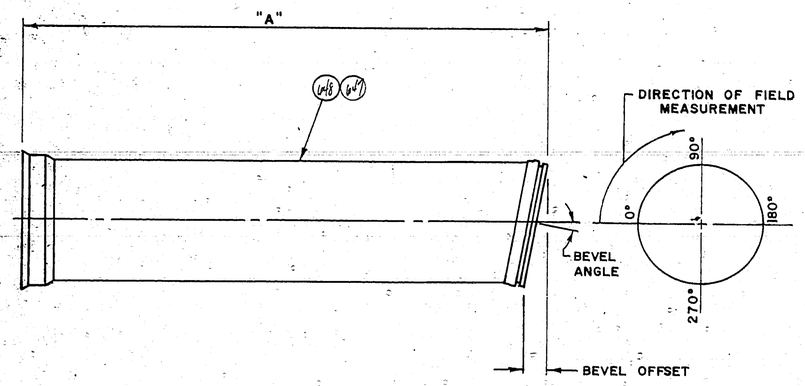

SEE SHT. 6F5 FOR 1439

* w/CUT SPIGOT

Special

P.C. NO.	CUT SECT.	CLASS	"A"	BEVEL ANGLE	BEVEL OFFSET	F.T. LOCATION ANGULAR	F.T. LOCATION CIRCUM.	REF. SHT.
1215	–	440	41'-3.25	2°24'	2.09	0	–	–
1312	–	440		1°43	1.49	270	–	–
1317	–	440		1°29'	1.29	90	–	–
1320	–	440		1°31'	1.32	180	–	6F8
1345	–	300		3°55'	3.41	0	–	–
1358	–	360		1°22'	1.19	90	–	–
1361	–	360		1°16'	1.10	270	–	–
1372	–	360		1°31'	1.32	180	–	6F14
1405	–	300		2°23'	2.08	90	–	–
1410	–	440		4°53'	4.28	90	–	–
1412	–	440		5°00'	4.36	270	–	–
1413	–	440		3°22	2.93	90	–	–
1425	–	440		1°25'	1.23	90	–	6F17
1427	–	440		1°54'	1.65	90	–	–
1439	–	440		5°00'	4.36	90	–	–
1462	–	360		1°35'	1.38	90	–	–
1485	–	360		2°19'	2.02	90	–	6F8
1487	–	360		2°03'	1.79	270	–	–
1524	35	360	19'-10.75"	2°06'	1.83	270	–	6F26
1538	–	440	41'-3.25"	2°32'	2.21	90	–	6F27

RECEIVED
MAY 3 1976
SONOMA COUNTY
WATER AGENCY

CHANGE ORDERS	SYMBOL	REVISION	DATE
	△	Change Bev. Angle	

UNLESS OTHERWISE SPECIFIED DIMENSIONS ARE IN INCHES
TOLERANCES
FRACT | X | XX | XXX | ANGLE

Ameron PIPE PRODUCTS GROUP

RUSSIAN RIVER - CONTRACT #2

DRAWN LW 8-26-76
CHECKED

60-4-102.230.47 6F2.1

T000-1000 (8/70)

6F3

FLAG	ITEM NO.	QUANTITY THIS DWG.	DESCRIPTION	MATERIAL SPECIFICATION
	–	–	49.875" O.D. Cyl	

CLASS 320 8GA (W9)
CLASS 360 5/16 R (W8)
CLASS 440 4GA (W7)

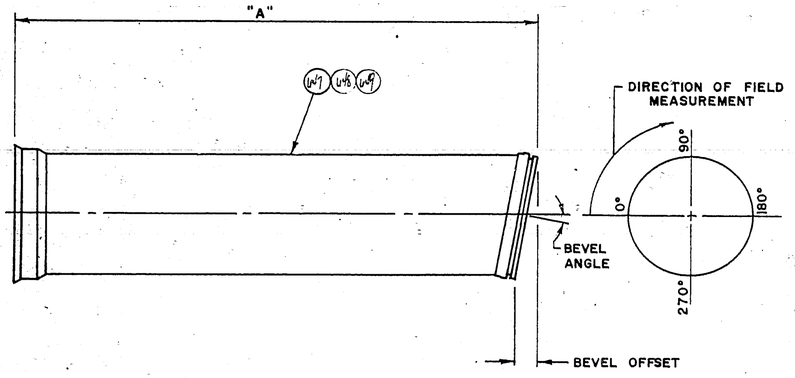

	P.C. NO.	CUT SECT.	CLASS	"A"	BEVEL ANGLE	BEVEL OFFSET	F.T. LOCATION ANGULAR	F.T. LOCATION CIRCUM.	REF. SHT.
	1540	–	440	41'-3.25"	2°53'	2.51	270	—	—
	1549	–	440		1°33'	1.35	270	—	—
	1562	–	360		1°20'	1.16	90	—	—
	1604	–	360		4°58'	4.33	90	—	—
*	1606	36	360	25'-5.23"	5°00'	4.36	270	—	6F26
*	1607	–	360	41'-3.25"	3°04'	2.67	270	—	6F27
	1608	–	360		2°48'	2.44	90	—	—
	1639	–	360		2°51'	2.48	270	—	—
	1642	–	360		3°27'	3.01	90	—	6F27
	1674	–	360		2°54'	2.53	180	—	—
	1689	–	360		2°44'	2.38	90	—	6F27
*	1690	–	360		2°55'	2.54	270	—	—
*	1691	–	360		4°10'	3.63	270	—	—
*	1692	–	360		4°07'	3.59	90	—	—
	1724	–	360		1°26'	1.25	90	—	—
	1778	–	360		3°50'	3.34	90	—	6F31
	1779	–	360		3°53'	3.39	286°10'	124.55"	—
	1795	–	360		5°00'	4.36	270	—	—
	1796	–	360		3°33'	3.09"	90	—	—
△1	1844	–	320		1°02'	0.90	90	—	6F32

w/ CUT SPIGOT

RECEIVED MAY 3 1976 SONOMA COUNTY WATER AGENCY

Ameron PIPE PRODUCTS GROUP

CHANGE ORDERS	SYMBOL	REVISION	DATE	BY	APPV'D.
	△1	Change Bev Angle	4/29/76	RB	

UNLESS OTHERWISE SPECIFIED DIMENSIONS ARE IN INCHES
TOLERANCES
FRACT ± | .X ± | XX ± | XXX ± | ANGLE ±
DWG. SCALE

RUSSIAN RIVER – CONTRACT #2

DRAWN KW 2-26-76
CHECKED
APPV'D.

60-4-102.230.48

2314

6F3.0

1000-1000 (8/70)

FLAG	ITEM NO.	QUANTITY THIS DWG.	DESCRIPTION	MATERIAL SPECIFICATION
	—	—	49.875" O.D. CYL.	

CLASS 320 66A (WM)
CLASS 360 3/16@ (WM)

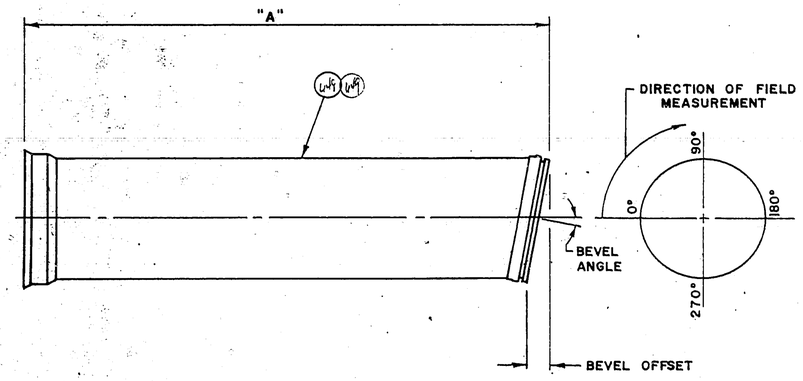

* w/OUT SPIGOT

	P.C. NO.	CUT SECT.	CLASS	"A"	BEVEL ANGLE	BEVEL OFFSET	F.T. LOCATION ANGULAR	F.T. LOCATION CIRCUM.	REF. SHT.
1	1860	—	360	41'-3.25"	1°18'	1.13	270	—	—
	1874	—	360		4°10'	3.63	90	—	—
*	1876	—	360		4°15'	3.71	270	—	6F33
**	1877	—	360		1°40'	1.45	90	—	—
*	1878	—	360		4°30'	4.01	90	—	—
	1879	—	320		1°27'	1.26	90	—	—
	1893	—	320		3°34'	2.67	180	—	—
	1902	—	360		3°54'	3.40	90	—	—
*	1906	—	360		4°31'	3.95	270	—	—
*	1907	—	360		1°22'	1.19	270	—	—
	1933	—	320		4°4'	4.09	180	—	—
	1937	—	320		1°34'	1.36	270	—	6F35
	1940	—	320		1°46'	1.54	90	—	—
	1950	—	320		1°20'	1.16	0	—	—
	1994	—	320		4°16'	3.72	90	—	—
	1996	—	320		4°32'	3.95	270	—	—
	1997	—	320		4°32'	3.95	270	—	—
	1999	—	320		3°4'	2.67	90	—	—
	2004	—	320		1°11'	1.03	90	—	—
	2048	—	320		1°17'	1.12	270	—	—

RECEIVED MAY 3 SONOMA COUNTY WATER AGENCY

Ameron PIPE PRODUCTS GROUP

Russian River - Contract #2

CHANGE ORDERS	SYMBOL	REVISION	DATE	BY	APPV'D
	1	Change Bev Angle	4/20/76	RG	

UNLESS OTHERWISE SPECIFIED DIMENSIONS ARE IN INCHES
TOLERANCES
FRACT ± .X ± .XX ± .XXX ± ANGLE ±
DWG SCALE

DRAWN	KW	2-26-76	60-4-102.230.49
CHECKED			
APPV'D			2314 6F4.1

6FS

FLAG	ITEM NO.	QUANTITY THIS DWG	DESCRIPTION	MATERIAL SPECIFICATION
	–	–	49.875" O.D. CYL.	
			CLASS 260 10GA (650)	
			CLASS 320 8GA (649)	

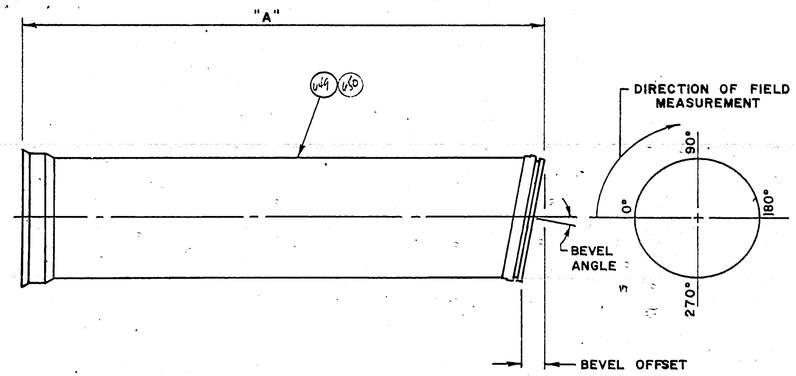

* w/ CUT SPIGOT

P.C. NO.	CUT SECT.	CLASS	"A"	BEVEL ANGLE	BEVEL OFFSET	F.T. LOCATION ANGULAR	F.T. LOCATION CIRCUM.	REF. SHT.
~~2080~~	–	~~320~~	41'-3.25"	~~4°37'~~	~~4.03~~	0	—	—
~~2081~~	–	~~320~~		~~1°47'~~	1.47"	0	—	—
~~2197~~	–	320		~~4°01'~~	3.50	90	—	—
~~2204~~	–	320		~~3°23'~~	2.66	270	—	—
~~2213~~	–	260		~~1°57'~~	1.61	90	—	—
~~2224~~	–	260		~~1°28'~~	1.28	270	—	—
~~2229~~	–	260		~~1°38'~~	1.42	270	—	—
* ~~2237~~	–	260		~~5°00'~~	4.36	90	—	6FS2
~~2238~~	–	260		~~3°40'~~	3.20	90	—	—
~~2247~~	–	260		~~2°15'~~	1.96	270	—	—
~~2252~~	–	260		~~1°32'~~	1.26	90	—	—
~~2262~~	–	260		~~5°00'~~	4.36	0	—	—
~~2262~~	–	260		~~2°52'~~	2.60	90	—	—
~~2270~~	–	260		~~3°02'~~	2.74	270	—	—
~~2273~~	–	260		~~2°13'~~	1.93	90	—	—
~~2275~~	3g	260	25'-10.75"	~~4°42'~~	4.10	270	—	6FS3
* ~~2277~~	–	260	41'-3.25"	~~5°00'~~	4.36	90	—	—
~~2287~~	–	260		~~1°37'~~	1.41	90	—	6FS2
~~2288~~	–	260		~~1°37'~~	1.37	90	—	—
~~2293~~	–	260		~~3°52'~~	3.37	0	—	—
~~1437~~	–	~~440~~		5°00'	4.36	90	—	6P18

CHANGE ORDERS	SYMBOL	REVISION	DATE	BY	APPV'D.

UNLESS OTHERWISE SPECIFIED DIMENSIONS ARE IN INCHES
TOLERANCES

FRACT.	.X	.XX	.XXX	ANGLE
±	±	±	±	±

DWG. SCALE

Ameron PIPE PRODUCTS GROUP

RUSSIAN RIVER - CONTRACT #2

DRAWN	KW	6-26-76
CHECKED		
APPV'D.		

2314

60-4-102.230.50

6FS.0

1000-1000 (8/70)

FLAG	ITEM NO	QUANTITY THIS DWG.	DESCRIPTION	MATERIAL SPECIFICATION
	651	—	49.875" O.D. × 3/16" R CYL	

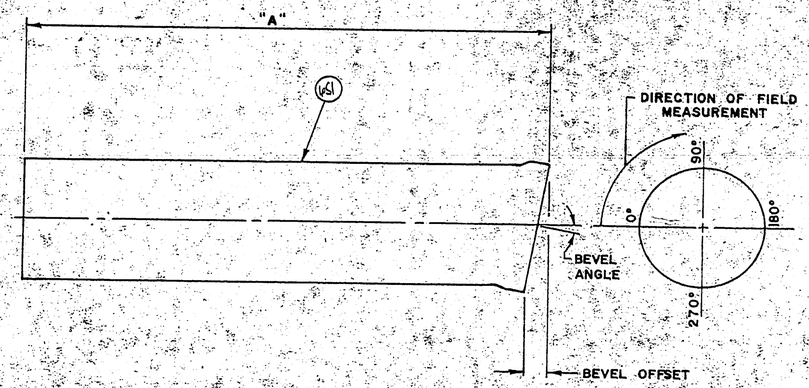

P.C. NO.	CUT SECT.	CLASS	"A"	BEVEL ANGLE	BEVEL OFFSET	F.T. LOCATION ANGULAR	F.T. LOCATION CIRCUM.	REF. SHT.
1510	—	360	41'-2"	2°34'	2.24	112°29'	48.96	—
1511	—	360		3°01'	2.63	180	—	—
1512	33	360	27'-1.28"	3°27'	3.01	270	—	6F20
1520	—	360	41'-2"	2°17'	1.99	90	—	—
1727	—	360		5°00'	4.36	90	—	—
1730	—	360		5°00'	4.36	90	—	6F30
1731	—	360		1°13'	1.06	90	—	—
2059	—	360		1°29'	1.29	270	—	6F28

CHANGE ORDERS	SYMBOL	REVISION	DATE	BY	APPV'D

UNLESS OTHERWISE SPECIFIED DIMENSIONS ARE IN INCHES

TOLERANCES

FRACT.	X	XX	XXX	ANGLE
±	±	±	±	±

DWG. SCALE

Ameron PIPE PRODUCTS GROUP

Russian River Contract #2

DRAWN KW 2-27-76

CHECKED

APPV'D

60-4-102.230.51

2314

6F60

1000-1000 (5/70)

FLAG	ITEM NO	QUANTITY THIS DWG.	DESCRIPTION	MATERIAL SPECIFICATION
	—	—	49.875" O.D. CYL	
	615	9	3" STD WT THREDOLET	
	640	9	3/16"R × 6" SQ COLLAR ROLL TO 24.94"R	

CLASS 320 8GA (649)
CLASS 360 3/16R (648)
CLASS 440 4GA (649)

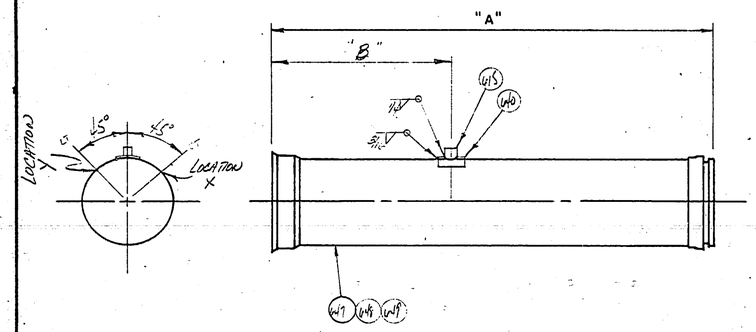

PC. NO.	CUT SECT.	CLASS	"A"	"B"	FIELD TOP LOCATION	REF. SHT.
1215	—	440	41'-3.25"	34'-2.64"	Y	—
1267	—	440		24'-11.76	Y	—
1295	—	440		7'-5.64	X	—
1795	—	360		6'-0.48	Y	6F3
1842	—	320		22'-7.68	Y	—
1891	—	320		40'-3.12"	X	—
1972	—	320		19'-11.64	Y	—

PC. NO.	CUT SECT	CLASS	"A"	"B"	FIELD TOP LOCATION	REF. SHT.
1980	—	320	41'-3.25"	2'-11.28"	X	—
2042	—	320		33'-5.04"	Y	—

CHANGE ORDERS	SYMBOL	REVISION	DATE	BY	APPV'D.

UNLESS OTHERWISE SPECIFIED DIMENSIONS ARE IN INCHES
TOLERANCES

FRACT.	.X	.XX	.XXX	ANGLE
±	±	±	±	±

DWG. SCALE

Ameron PIPE PRODUCTS GROUP

RUSSIAN RIVER - CONTRACT #2

DRAWN 2-27-76 KW
CHECKED
APPV'D.

2314 6F7.0

60-4-102.230.52

FLAG	ITEM NO	QUANTITY THIS DWG.	DESCRIPTION	MATERIAL SPECIFICATION
	—	—	49.875" O.D. CYL.	
	65	7	18" CL. D SKIRTED FLG. 12.50" OAL	SEE SHT. 6B
	645	3	38.25" O.D. × 1/4 R COLLAR ROLL TO 24.94" R.	
*	646	4	38.25" O.D. × 5/16 R COLLAR ROLL TO 24.94" R.	

CLASS 360 3/16" R (648)
* CLASS 440 4GA (647)

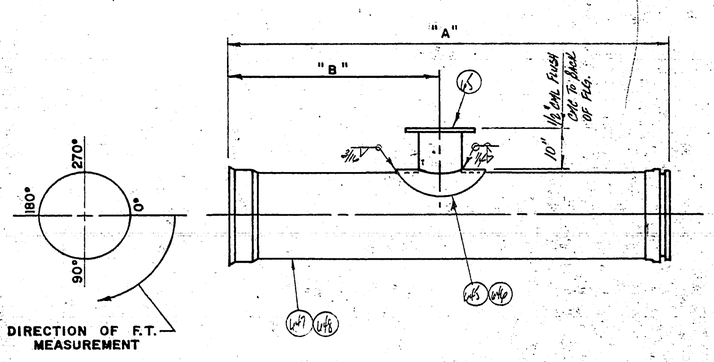

PC. NO.	CUT SECT.	CLASS	"A"	"B"	FT. LOCATION ANGULAR	FT. LOCATION CIRCUM.	REF. SHT.
1217 ✓	—	440	41'-3.25"	30'-10.20"	270	—	6F9
1271 ✓	—	440		3'-0"	270	—	—
1320 ✓	—	440		7'-2.64	270	—	—
1369 ✓	—	360		15'-10.92	270	—	—
1391 ✓	—	360		37'-10.44	270	—	—
1436 ✓	—	440		19'-8.40	270	—	—
1485 ✓	—	360		30'-9.60	270	—	6F2

w/CUT SPIGOT

CHANGE ORDERS	SYMBOL	REVISION	DATE	BY	APPV'D

UNLESS OTHERWISE SPECIFIED DIMENSIONS ARE IN INCHES
TOLERANCES
FRACT ± X ± XX ± XXX ± ANGLE ±
DWG. SCALE

Ameron PIPE PRODUCTS GROUP

RUSSIAN RIVER — CONTRACT #2

DRAWN KW 2-27-76
CHECKED
APPV'D

2314 6F8.0

60-4-102.230.53

1000 1000 (8-70)

FLAG	ITEM NO.	QUANTITY THIS DWG.	DESCRIPTION	MATERIAL SPECIFICATION
	69	3	18" CL "D" BLIND FLG. SEE SHT. 6BV	
	61	3	4"x150# SLIP-ON FLG. F.F.	
	636	15"	4" STD WT. STEEL PIPE	

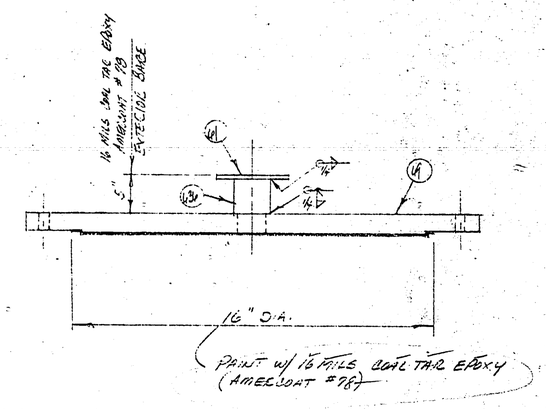

Pc. No.	LAYOUT REF.
1217A	6L1
1485A	6L9
2237A	6L31

CHANGE ORDERS	SYMBOL	REVISION	DATE	BY	APPV'D

UNLESS OTHERWISE SPECIFIED DIMENSIONS ARE IN INCHES

TOLERANCES

FRACT.	.X	.XX	.XXX	ANGLE
±	±	±	±	±

DWG. SCALE

Ameron PIPE PRODUCTS GROUP

RUSSIAN RIVER - CONTRACT #2

DRAWN: KW 2-27-76

CHECKED:

APPV'D:

2314

60-4-102.230.54

1000-1000 (8/70)

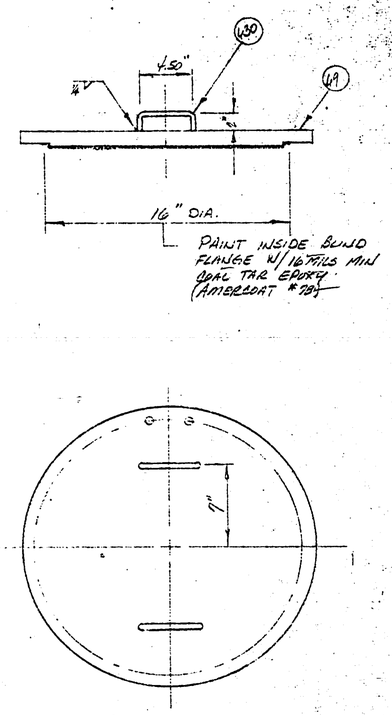

FLAG	ITEM NO.	QUANTITY THIS DWG.	DESCRIPTION	MATERIAL SPECIFICATION
	69	17	18" CL 5" BLIND FLG. SEE SHT 68	
	630	25'	1/2" Φ ROD (CANDLES)	

	Pc. No.	LAYOUT REF.
CLASS E	1271A	6L2
CLASS E	1320A	6L4
CLASS E	1369A	6L6
CLASS E	1436A	6L8
CLASS E	1512A	6L10
CLASS E	1514A	6L10
CLASS E	1538A	6L11
CLASS E	1607A	6L13
CLASS E	1689A	6L14

	Pc. No.	LAYOUT REF.
D	1778A	6L17
D	1811A	6L18
D	1939A	6L22
D	2030A	6L25
D	2032A	6L25
D	2067A	6L27
D	2111A	6L28
D	2339A	6L36

CHANGE ORDERS	SYMBOL	REVISION	DATE	BY	APPV'D

UNLESS OTHERWISE SPECIFIED DIMENSIONS ARE IN INCHES

TOLERANCES

FRACT.	X	XX	XXX	ANGLE
±	±	±	±	±

DWG. SCALE

Ameron PIPE PRODUCTS GROUP

RUSSIAN RIVER – CONTRACT #2

DRAWN	[illegible]	2-24-76
CHECKED		
APPV'D		

2314

60-4-102.230.55

1000-1000 (8/70)

I-CUT TAB.

FLAG	ITEM NO.	QUANTITY THIS DWG	DESCRIPTION	MATERIAL SPECIFICATION
	-	-	49.875" O.D. CYLINDER	

CLASS 440 - 4GA (49)
CLASS 320 - 8GA (49)

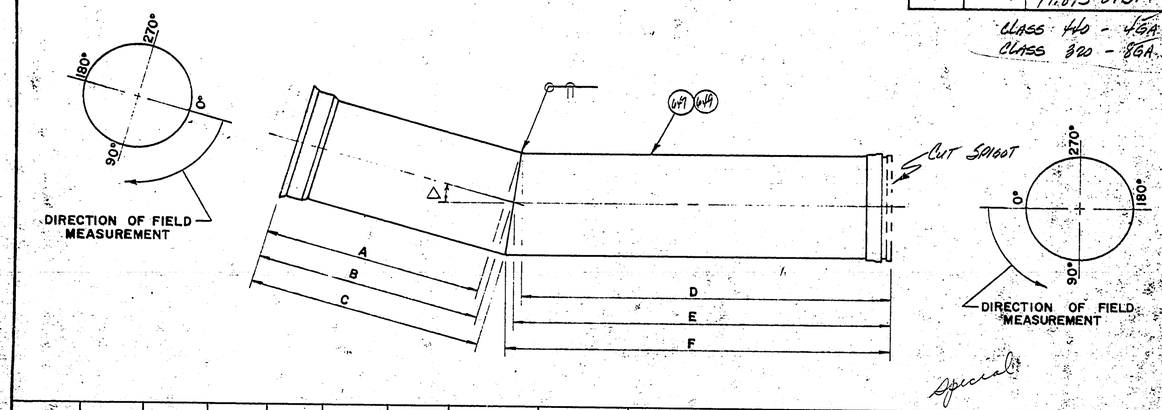

Special

P.C. NO.	CUT SECT.	CLASS	CMC	CML	△	CUT ∠	A	B	C	D	E	F	CHORD	F.T. LOCATION SPIGOT END ANGULAR	F.T. LOCATION SPIGOT END CIRCUM.	O.D. CYLINDER BELL END ANGULAR	O.D. CYLINDER BELL END CIRCUM.
1272	-	440	.75	.75	9°41'	4°50'	30'-7.48"	30'-9.59	30'-11.70"	10'-3.53"	10'-5.64	10'-7.75"	41'-1.89	90	—	90	—
1275	-	440			12°09'	6°04'	38'-0.50"	38'-3.15	38'-5.80"	2'-9.51"	3'-0.16"	3'-2.81"	41'-2.56"	90	—	90	—
1438	-	440			7°00'	3°30'	30'-11.88	31'-1.41	31'-2.94	10'-0.25"	10'-1.78	10'-3.31"	41'-2.51"	270	—	270	—
2301	-	320			10°00'	5°00'	38'-7.72"	38'-9.90	39'-0.08"	2'-3.17"	2'-5.35	2'-7.53"	41'-2.83"	90	—	90	—
2305	-	320			19°48'	9°54'	37'-1.52"	37'-5.87"	37'-10.22"	3'-5.01"	3'-9.36	4'-1.71"	41'-0.79"	90	—	90	—

CHANGE ORDERS	SYMBOL	REVISION	DATE	BY	APPV'D.

UNLESS OTHERWISE SPECIFIED DIMENSIONS ARE IN INCHES.
TOLERANCES
FRACT. ± X ± XX ± XXX ± ANGLE ±
DWG. SCALE

Ameron PIPE PRODUCTS GROUP

Russian River - Contract #2

DRAWN KW 2-27-76
CHECKED
APPV'D.

7314 OFIED

60-4-102.230.56

1000 1 100 (R 701)

I-CUT

FLAG	ITEM NO.	QUANTITY THIS DWG	DESCRIPTION	MATERIAL SPECIFICATION
	647	21'-10.75	49.875" O.D. x 4GA. CYL.	
	P3	1	48" Bell Ring	

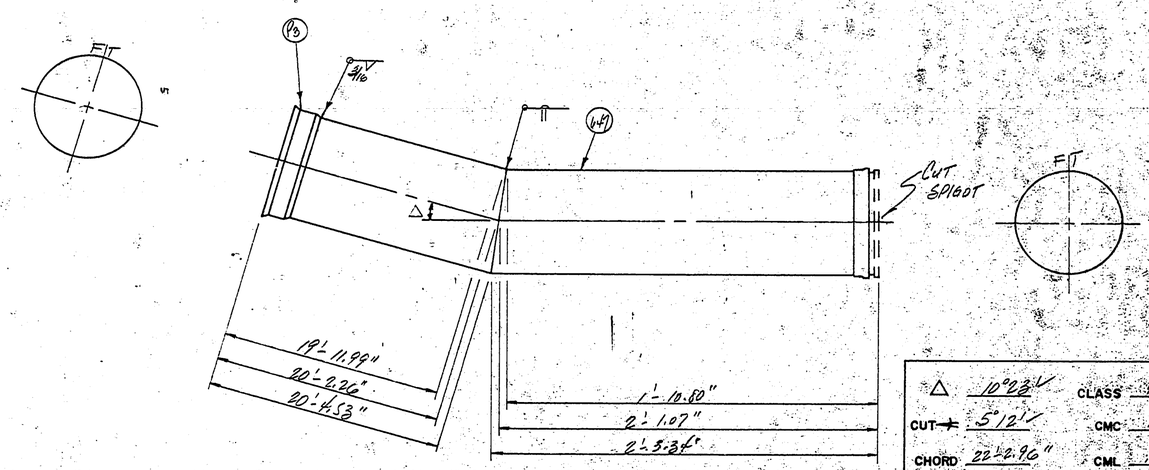

△ 10°23' CLASS 440

CUT 5°12' CMC .75

CHORD 22'-2.96" CML .75

CS# 32

Ameron PIPE PRODUCTS GROUP

Russian River - Contract # 2

CHANGE ORDERS	SYMBOL	REVISION	DATE	BY	APPV'D.

UNLESS OTHERWISE SPECIFIED DIMENSIONS ARE IN INCHES

TOLERANCES

FRACT.	.X	.XX	.XXX	ANGLE
±	±	±	±	±

DWG. SCALE

DRAWN	KW	3-1-76
CHECKED		
APPV'D.		

2314

60-4-102.230.57

1000-1000 (8/70)

I-CUT

FLAG	ITEM NO.	QUANTITY THIS DWG	DESCRIPTION	MATERIAL SPECIFICATION
	647	19'-4.50"	49.875" O.D. x 4GA. CYL.	
	P2	1	48" SPIGOT RING	

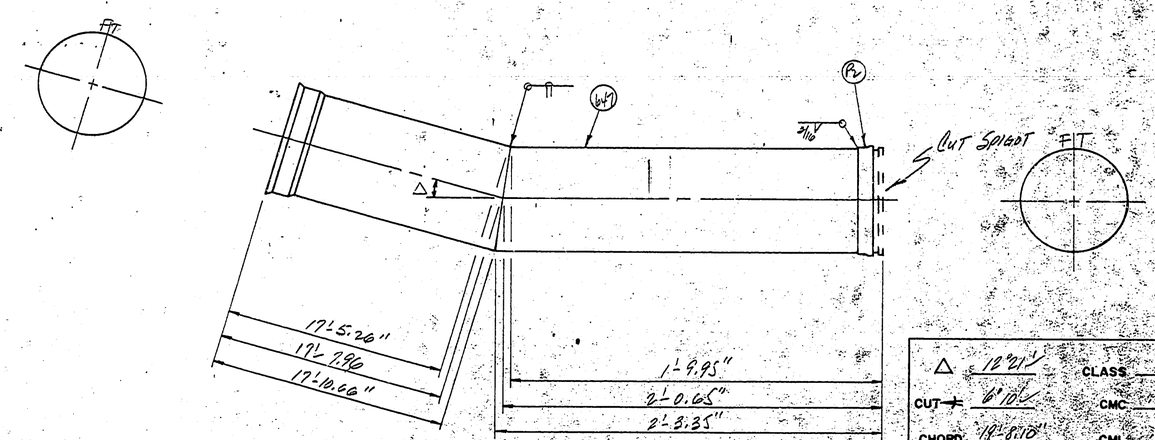

△ 12°21'
CUT 6°10'
CHORD 19'-8.10"
CLASS 440
CMC .75
CML .75
Cs # 32

1274
642

Ameron PIPE PRODUCTS GROUP

Russian River - Contract #2

CHANGE ORDERS	SYMBOL	REVISION	DATE	BY	APPV'D.

UNLESS OTHERWISE SPECIFIED DIMENSIONS ARE IN INCHES

TOLERANCES

FRACT.	X	XX	XXX	ANGLE
±	±	±	±	±

DWG. SCALE

DRAWN	KW	3-2-76	60-4-102.230.58
CHECKED			
APPV'D.			2314

6F13.0

FLAG	ITEM NO	QUANTITY THIS DWG.	DESCRIPTION	MATERIAL SPECIFICATION
	648	—	49.875" O.D. 3/16" R CYL	
	62	4	6" x 150# SLIP-ON FLG F.F.	
	637	3'	6" STD WT. STEEL PIPE	
	642	3	12" SQ x 1/4 R COLLAR ROLL TO 24.94R	

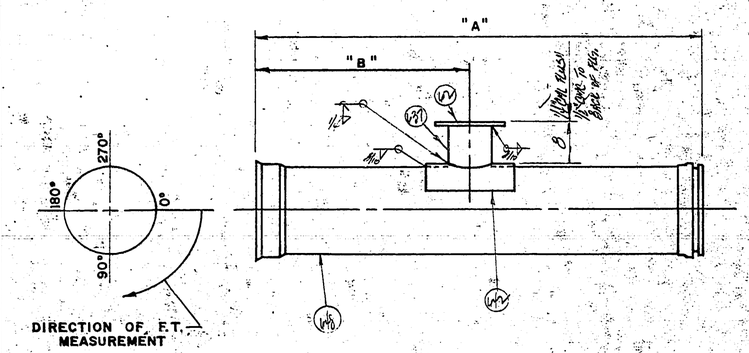

PC. NO.	CUT SECT.	CLASS	"A"	"B"	FT. LOCATION ANGULAR	FT. LOCATION CIRCUM.	REF. SHT.
1372	—	360	41'-3.25"	18'-10.32	180	—	6F2
1618	—	360	41'-3.25"	20'-8.76"	180	—	—
1656	—	360	41'-3.25"	29'-3.36"	180	—	—
1792	—	360	41'-3.25"	38'-2.76	180	—	—

CHANGE ORDERS	SYMBOL	REVISION	DATE	BY	APPV'D

UNLESS OTHERWISE SPECIFIED DIMENSIONS ARE IN INCHES
TOLERANCES
FRACT. ± X ± XX ± XXX ± ANGLE ±
DWG. SCALE

Ameron PIPE PRODUCTS GROUP

RUSSIAN RIVER - CONTRACT #2

DRAWN KW 3-2-76
CHECKED
APPV'D.

60-4-102.230.59

2314

6F4.0

1000 1000 (8-70)

FLAG	ITEM NO.	QUANTITY THIS DWG.	DESCRIPTION	MATERIAL SPECIFICATION
	610	9	18" BLIND FLG. CL. "D" SEE SHT. 682	

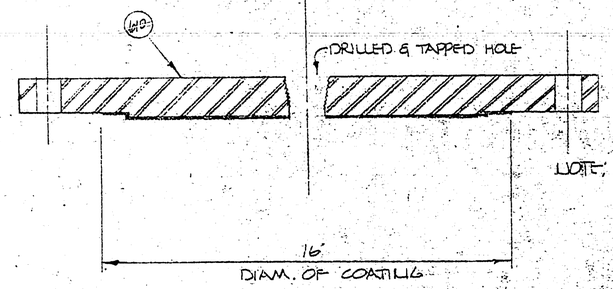

NOTE: COAT INSIDE BLIND FLG. AS SHOWN W/ 2 COATS (16 MILS) COAL TAR EPOXY - AMERCOAT #78

CLASS D OK

PC. NO.	LAYOUT LEG
1391 A	GL6
1576 A	GL12
1642 A	GL14
1723 A	GL15
1844 A	GL18
1890 A	GL20
1975 A	GL23

	PC. NO.	LAYOUT LEG
D	2145 A	GL28
D	2287 A	GL30

Ameron PIPE PRODUCTS GROUP

RUSSIAN RIVER - CONTRACT # 2

CHANGE ORDERS	SYMBOL	REVISION	DATE	BY	APPV'D

UNLESS OTHERWISE SPECIFIED DIMENSIONS ARE IN INCHES

TOLERANCES

FRACT.	X	XX	XXX	ANGLE
±	±	±	±	±

DWG. SCALE

DRAWN	[illegible]	2-28-76
CHECKED		
APPV'D		

2314

60-4-102.230.60

1-CUT

FLAG	ITEM NO.	QUANTITY THIS DWG.	DESCRIPTION	MATERIAL SPECIFICATION
	647	41'-3.25"	49.875" O.D. x 4GA. CYL.	
	614	1	2" x 3000# THREDOLET	
	640	1	3/16" R x 6" SQ. COLLAR ROLL TO 24.94" R.	

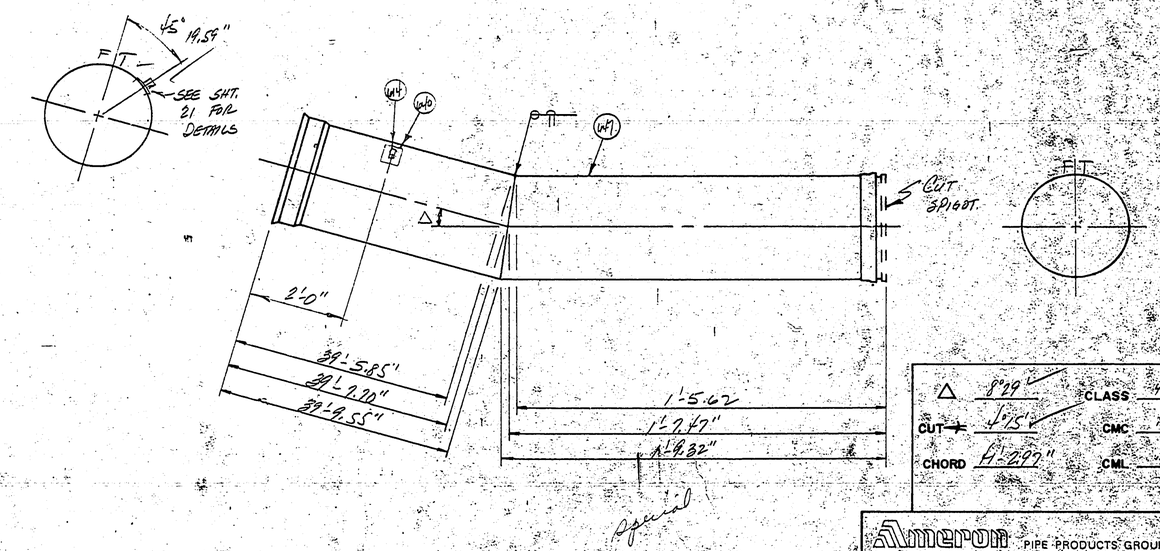

△	8°29'	CLASS	440
CUT	4°15'	CMC	.75
CHORD	41'-2.97"	CML	.75

Ameron PIPE PRODUCTS GROUP

Russian River - Contract #2

CHANGE ORDERS	SYMBOL	REVISION	DATE	BY	APPV'D.

UNLESS OTHERWISE SPECIFIED DIMENSIONS ARE IN INCHES

TOLERANCES

FRACT.	.X	.XX	.XXX	ANGLE
±	±	±	±	±

DWG. SCALE

DRAWN	KW	3-2-76
CHECKED		
APPV'D.		

60-4-102.230.61

2314

6F16.0

1000-1000 (8/70)

FLAG	ITEM NO	QUANTITY THIS DWG	DESCRIPTION	MATERIAL SPECIFICATION
	—	—	49.875" O.D CYL	
	614	3	2" x 3000# THREDOLET	
	640	3	3/16"R x 6" SQ COLLAR ROLL TO 34.94"R	

CLASS 320 8GA (649)
CLASS 360 3/16R (648)
CLASS 440 4GA (647)

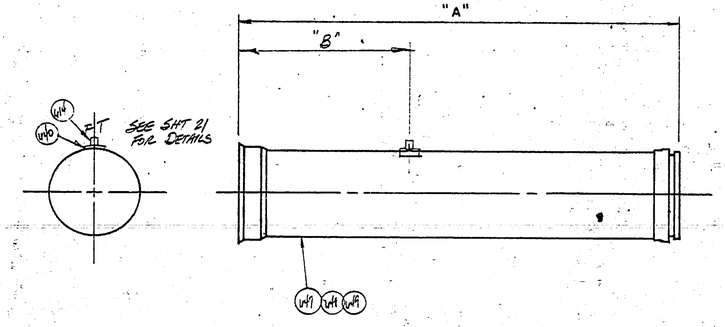

PC. NO.	CUT SECT.	CLASS	"A"	"B"		REF. SHT.
1425	—	440	41'-3.25"	38'-10.68		6F2
1752	—	360	41'-3.25"	38'-0"		—
2019	—	320	41'-3.25"	38'-0"		—

CHANGE ORDERS	SYMBOL	REVISION	DATE	BY	APPV'D.

UNLESS OTHERWISE SPECIFIED DIMENSIONS ARE IN INCHES
TOLERANCES
FRACT. ± .X ± .XX ± .XXX ± ANGLE ±
DWG. SCALE

Ameron PIPE PRODUCTS GROUP

Russian River - Contract #2

DRAWN Lw 3-2-76
CHECKED
APPV'D.

60-4-102.230.62

2314

6F12.0

I-CUT

FLAG	ITEM NO.	QUANTITY THIS DWG	DESCRIPTION	MATERIAL SPECIFICATION
	647	41'-3.25"	49.875" O.D. x 4GA CYL.	

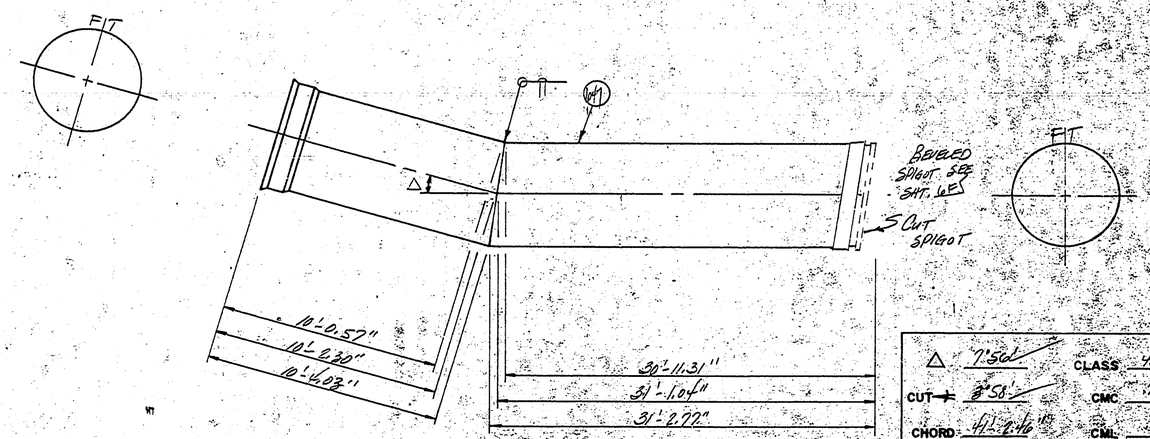

△ 7°56'
CUT 3°58'
CHORD 41'-2.46"
CLASS 440
CMC .75
CML .75
1437
648

Ameron PIPE PRODUCTS GROUP

Russian River – Contract #2

CHANGE ORDERS	SYMBOL	REVISION	DATE	BY	APPV'D

UNLESS OTHERWISE SPECIFIED DIMENSIONS ARE IN INCHES

TOLERANCES

FRACT.	.X	.XX	.XXX	ANGLE
±	±	±	±	±

DWG. SCALE

DRAWN	KW	5-2-76
CHECKED		
APPV'D		

2314

60-4-102.230.63

1000-1000 (8/70)

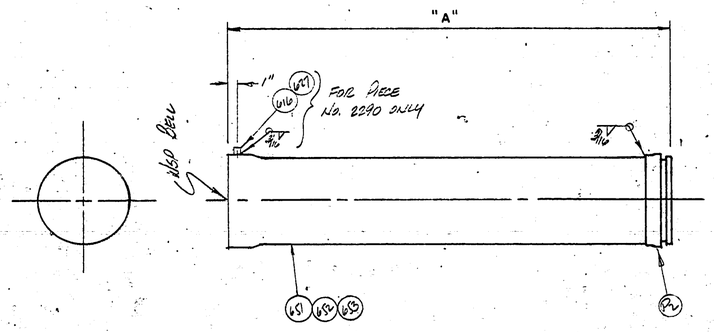

FLAG	ITEM NO.	QUANTITY THIS DWG.	DESCRIPTION	MATERIAL SPECIFICATION
	—	—	49.875" O.D. CYL.	
Pv	5		5/8" SPIGOT RING	
616	1		1/4" STD PIPE COUPLING	
621	1		1/4" STD PIPE PLUG	

CLASS 360 3/16" R (651)
CLASS 320 8 GA. (652)
CLASS 200 10 GA. (653)

PC. NO.	CUT SECT.	CLASS	"A"			REF. SHT.
1505	—	360	41'-6"			—
1725	—	360	41'-6"			—
2025	—	320	41'-6"			6F18
2052	—	320	41'-6"			—
2290	—	260	41'-6"			—

CHANGE ORDERS	SYMBOL	REVISION	DATE	BY	APPV'D.

UNLESS OTHERWISE SPECIFIED DIMENSIONS ARE IN INCHES
TOLERANCES

FRACT	.X	.XX	.XXX	ANGLE
±	±	±	±	±

DWG. SCALE

Ameron PIPE PRODUCTS GROUP

RUSSIAN RIVER - 36" CONTRACT #2

DRAWN	KW	8-3-76
CHECKED		
APPV'D.		

2314 6F19.0
60-4-102.230.64

FLAG	ITEM NO.	QUANTITY THIS DWG.	DESCRIPTION	MATERIAL SPECIFICATION
	651	27'-1.28	49.875" O.D. x 7/16" R. CYL.	
	65	1	18" O.D. SKIRTED FLG. 12.6 ... SEE SHT. 60	
	645	1	38.25" O.D. x 1/4" R COLLAR ROLL TO 2.44' R	
	614	1	2" x 3000# THREDOLET	
	640	1	3/16" R x 6" SQ COLLAR ROLL TO 2.44' R	
	63	1	8" x 150# SLIP-ON FLG. F.F.	
	638	9"	8" SCH. 40 STEEL PIPE	
	643	1	16" SQ x 1/4" R COLLAR ROLL TO 2.44' R	

CLASS 300
CMC .75
CML .75
CL 33

Ameron PIPE PRODUCTS GROUP

Russian River - Contract

CHANGE ORDERS	SYMBOL	REVISION	DATE	BY	APPV'D

UNLESS OTHERWISE SPECIFIED DIMENSIONS ARE IN INCHES

TOLERANCES

FRACT.	.X	.XX	.XXX	ANGLE
±	±	±	±	±

DWG. SCALE

DRAWN		3-3-76
CHECKED		
APPV'D.		

2314

1000-1000 (6-70)

60-4-102.230.65

FLAG	ITEM NO.	QUANTITY THIS DWG.	[redacted] DESCRIPTION	MATERIAL SPECIFICATION
	66	1	48" CL "D" SKIRTED FLG. SEE SHT 1 BL	

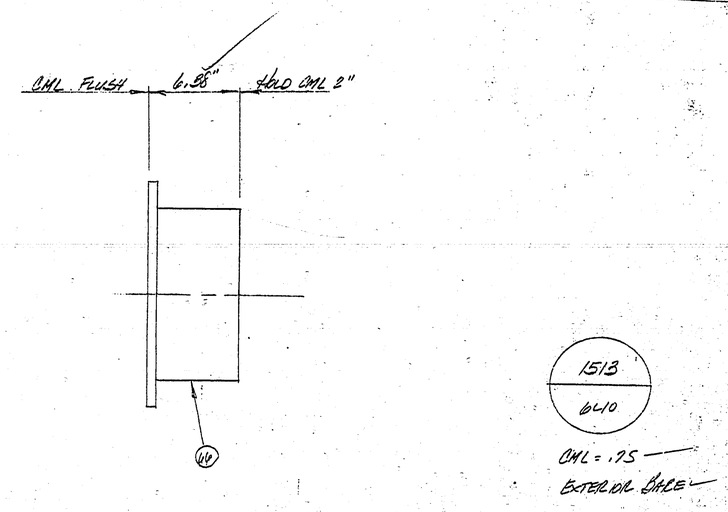

CHANGE ORDERS	SYMBOL	REVISION	DATE	BY	APPV'D.

UNLESS OTHERWISE SPECIFIED DIMENSIONS ARE IN INCHES

TOLERANCES

FRACT.	.X	.XX	.XXX	ANGLE
±	±	±	±	±

DWG. SCALE

Ameron PIPE PRODUCTS GROUP

RUSSIAN RIVER - CONTRACT #2

DRAWN	RW	3-3-76
CHECKED		
APPV'D.		

2314

60-4-102.230.66

6410

1000-1000 (8/70)

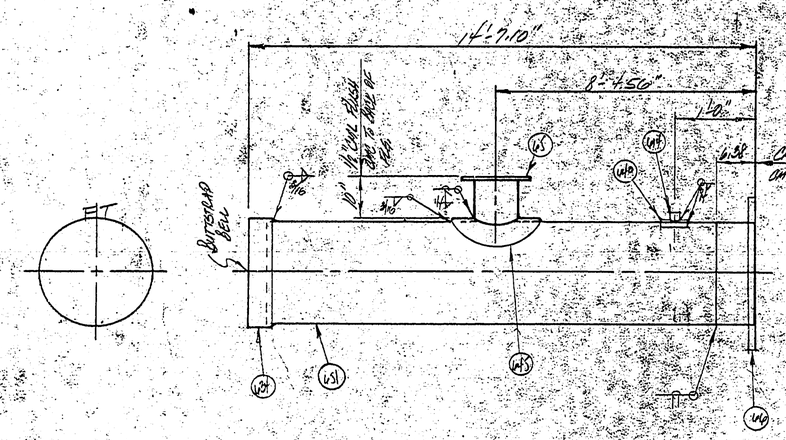

FLAG	ITEM NO.	QUANTITY THIS DWG.	DESCRIPTION	MATERIAL SPECIFICATION
	651	14'-0.72"	49.875 O.D. x 3/16" R CYL.	
	66	1	48" O.D. SKIRTED FLG. SEE SH.	
	65	1	18" O.D. SKIRTED FLG. 2.6 [illegible]	
	645	1	38.25 O.D. x 1/4" R COLLAR ROLL TO [illegible]	
	614	1	2" x 3000# THREADLET	
	640	1	3/16" R x 6" SQ COLLAR ROLL TO [illegible]	
	634	1	1/4" R x 4" WIDE B.S. BELL ROLL TO [illegible] O.D.	

CLASS 300
CMC 75
CML 75
CS# 33

Ameron PIPE PRODUCTS GROUP

Russian River - Contract #2

UNLESS OTHERWISE SPECIFIED DIMENSIONS ARE IN INCHES

TOLERANCES

FRACT.	X	XX	XXX	ANGLE
±	±	±	±	±

CHANGE ORDERS	SYMBOL	REVISION	DATE	BY	APPV'D	DWG. SCALE

DRAWN KO 3-3-76
CHECKED
APPV'D

60-4-102.230.67

INC. 1 2 3 4 5 6 7 8 9 10 11 12 13 14 15

BMI

METRIC 1 2 3 4 5 6 7 8 9 10 11 12 13 14 15

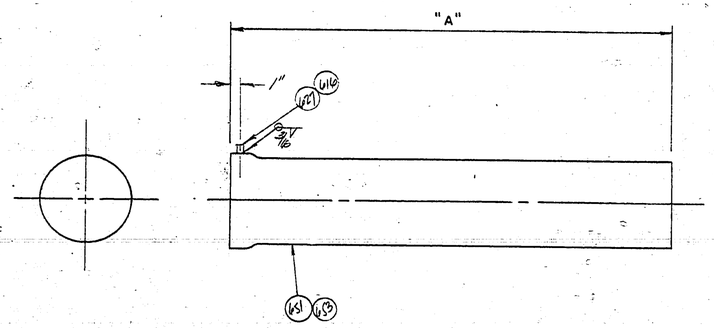

FLAG	ITEM NO.	QUANTITY THIS DWG	DESCRIPTION	MATERIAL SPECIFICATION
	—	—	49.875" O.D. C/L.	
	616	3	1/4" STD PIPE COUPLING	
	627	3	1/4" STD PIPE PLUG	

CLASS 360 3/16" R (651)
CLASS 200 10GA. (653)

PC. NO.	CUT SECT.	CLASS	"A"			REF. SHT.
1515	—	360	41'-2"			—
1516	—	360	41'-2"			—
2291	—	200	41'-2"			—

CHANGE ORDERS	SYMBOL	REVISION	DATE	BY	APPV'D.

UNLESS OTHERWISE SPECIFIED DIMENSIONS ARE IN INCHES
TOLERANCES

FRACT.	.X	.XX	.XXX	ANGLE
±	±	±	±	±

DWG. SCALE

Ameron PIPE PRODUCTS GROUP

Russian River - Contract #2

DRAWN	JW 8-2-76	
CHECKED		
APPV'D.		

73116
60-4-102.230.68

FLAG	ITEM NO.	QUANTITY THIS DWG.	DESCRIPTION	MATERIAL SPECIFICATION
	651	41'	49.875" O.D. x 3/16" R CYL	
	62	1	6" x 150# SLIP-ON FLG. F.F.	
	637	9"	6" STD WT STEEL PIPE	
	642	1	12" SQ x 1/4 R COLLAR ROLL TO 24.94 R	

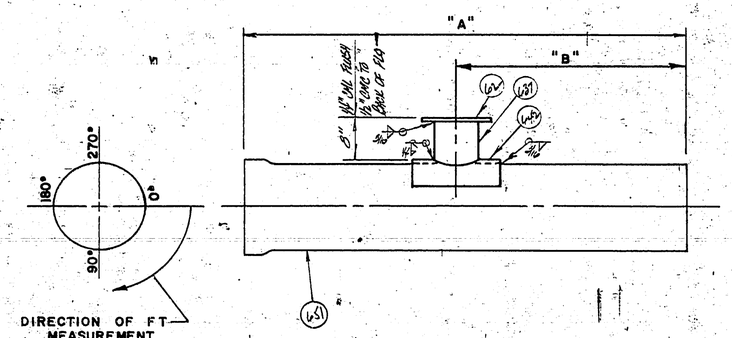

PC. NO.	CUT SECT.	CLASS	"A"	"B"	F.T. LOCATION ANGULAR	F.T. LOCATION CIRCUM.	REF. SHT.
1517	—	360	41'-2"	6'-8.48	180	—	—

CHANGE ORDERS	SYMBOL	REVISION	DATE	BY	APPV'D.

UNLESS OTHERWISE SPECIFIED DIMENSIONS ARE IN INCHES

TOLERANCES

FRACT.	.X	.XX	.XXX	ANGLE
±	±	±	±	±

DWG. SCALE

Ameron PIPE PRODUCTS GROUP

Russian River - Contract #2

DRAWN	KW	3-3-76
CHECKED		
APPV'D.		

2314

60-4-102.230.69

6F24.0

1000-1000 (8/70)

FLAG	ITEM NO.	QUANTITY THIS DWG.	DESCRIPTION	MATERIAL SPECIFICATION
	—	—	49.875" O.D. CYL	

CLASS 360 3/16 R (648)
CLASS 320 8GA (649)
CLASS 260 10GA (650)

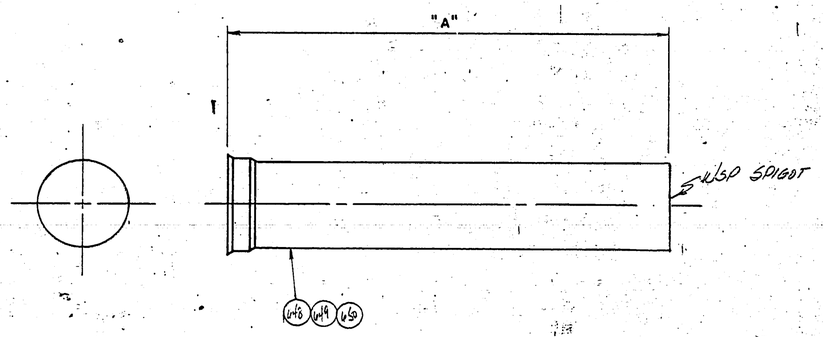

PC. NO.	CUT SECT.	CLASS	"A"			REF. SHT.
1521	—	360	40'-10.25"			—
1932	—	360	40'-10.25"			—
2065	—	320	40'-10.25"			—
2292	38	260	15'-4.50			—

CHANGE ORDERS	SYMBOL	REVISION	DATE	BY	APPV'D

UNLESS OTHERWISE SPECIFIED DIMENSIONS ARE IN INCHES

TOLERANCES

FRACT.	.X	.XX	.XXX	ANGLE
±	±	±	±	±

DWG. SCALE

Ameron PIPE PRODUCTS GROUP

Russian River - Contract #2

DRAWN	KW	3-3-76	60-4-102.230.70
CHECKED			2314
APPV'D			

1000-1000 (8/70)

FLAG	ITEM NO.	QUANTITY THIS DWG.	DESCRIPTION	MATERIAL SPECIFICATION
	—	—	49.875" O.D.	
	P2	4	48" SPIGOT RING	
*	P3	1	48" BELL RING	
	P1	2	48" BELL RING	

CLASS 360 3/16 R (648)
CLASS 320 8 GA (649)
CLASS 440 4 GA (647)

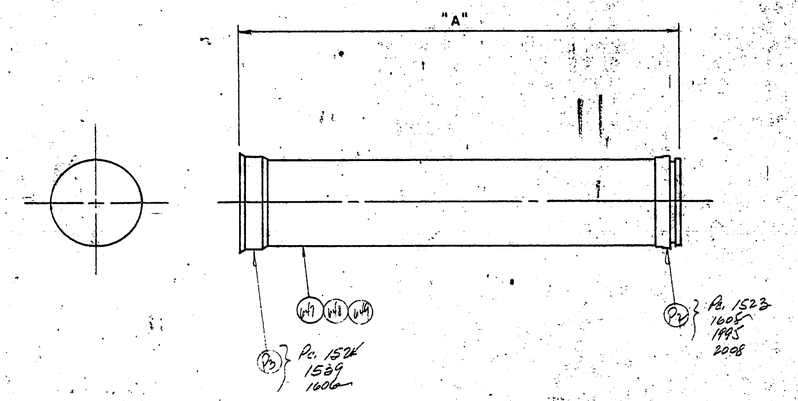

PC. NO.	CUT SECT.	CLASS	"A"			REF. SHT.	
* 1523	34	440	16'-4.45"			—	
1524	35	360	20'-3.25"			6F2	
1539	34	440	25'-7.30"			—	
1605	35	360	21'-8.50"			—	w/CUT SPIGOT
1606	36	360	25'-9.73"			6F3	w/CUT SPIGOT
1995	37	320	26'-3.25"			—	
2008	25	320	9'-8.42"			—	

CHANGE ORDERS	SYMBOL	REVISION	DATE	BY	APPV'D

UNLESS OTHERWISE SPECIFIED DIMENSIONS ARE IN INCHES

TOLERANCES

FRACT.	.X	.XX	.XXX	ANGLE
±	±	±	±	±

DWG. SCALE

Ameron PIPE PRODUCTS GROUP

RUSSIAN RIVER CONTRACT #2

DRAWN	KW	3-3-76
CHECKED		
APPV'D		

2314

60-4-102.230.71

FLAG	ITEM NO	QUANTITY THIS DWG	DESCRIPTION	MATERIAL SPECIFICATION
	—	—	49.875" O.D. CYL.	
	65	7	18" CL. D SLIPTED FLG. 12.50" OAL	SEE SHT 6B1
	645	6	38.25" O.D. x 1/4 PL Roll To 24.94" L.	
*	646	1	38.25" O.D. x 5/16 PL Roll To 24.94" R	

CLASS 360 3/16" PL (648)

*CLASS 440 4GA (647)

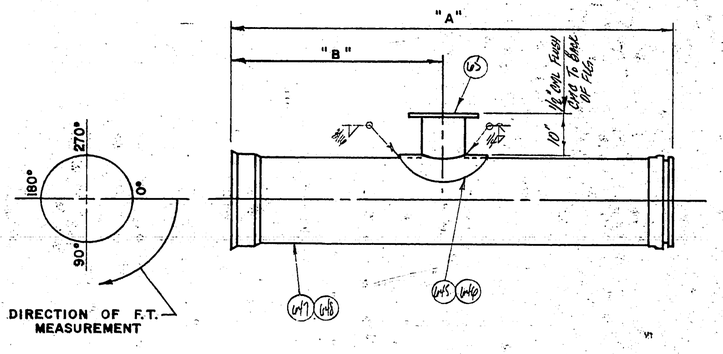

PC. NO.	CUT SECT.	CLASS	"A"	"B"	FT. LOCATION ANGULAR	FT. LOCATION CIRCUM.	REF. SHT.
1538	—	440	41'-3.25"	23'-9.24"	270	—	6F2
1576	—	360		5'-8.76	270	—	—
1607	—	360		20'-11.28	270	—	6F3 w/CUT SPIGOT
1642	—	360		35'-3.48	270	—	6F3
1689	—	360		11'-11.40"	270	—	6F3
1723	—	360		5'-6.48	270	—	—
1811	—	360		21'-7.92	270	—	—

CHANGE ORDERS	SYMBOL	REVISION	DATE	BY	APPV'D

UNLESS OTHERWISE SPECIFIED DIMENSIONS ARE IN INCHES

TOLERANCES: FRACT ± | X ± | XX ± | XXX ± | ANGLE ±

DWG. SCALE

Ameron PIPE PRODUCTS GROUP

RUSSIAN RIVER - CONTRACT #2

DRAWN KW 2-27-76

CHECKED

APPV'D

2314

60-4-102.230.72

6F220

1000-1000 (8/70)

FLAG	ITEM NO.	QUANTITY THIS DWG.	DESCRIPTION	MATERIAL SPECIFICATION
	—	—	49.875" O.D. CYL	
	614	3	2" x 3000# THREDOLET	
	640	3	3/16" PL x 6" SQ COLLAR ROLL TO 24.94" R.	

CLASS 480 1/4 PL (239)
CLASS 360 3/16 PL (651)
CLASS 320 8 GA (652)

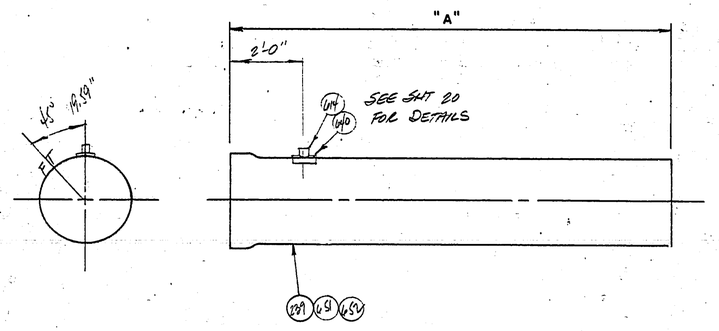

PC. NO.	CUT SECT.	CLASS	"A"			REF. SHT.
1728	18	480	11'-8.28"			—
2025	—	320	41'-2"			6F19
2059	—	360	41'-2"			6F6

CHANGE ORDERS	SYMBOL	REVISION	DATE	BY	APPV'D.

UNLESS OTHERWISE SPECIFIED DIMENSIONS ARE IN INCHES

TOLERANCES

FRACT.	.X	.XX	.XXX	ANGLE
±	±	±	±	±

DWG. SCALE

Ameron PIPE PRODUCTS GROUP

RUSSIAN RIVER - CONTRACT # 2

DRAWN	KW	3-3-76
CHECKED		
APPV'D.		

2314

60-4-102.230.73

6F28.0

1-CUT TAB.

FLAG	ITEM NO.	QUANTITY THIS DWG	DESCRIPTION	MATERIAL SPECIFICATION
	—	—	49.875" O.D CYL CLASS 320 8GA (S1) CLASS 360 9/16" 12 (S1)	

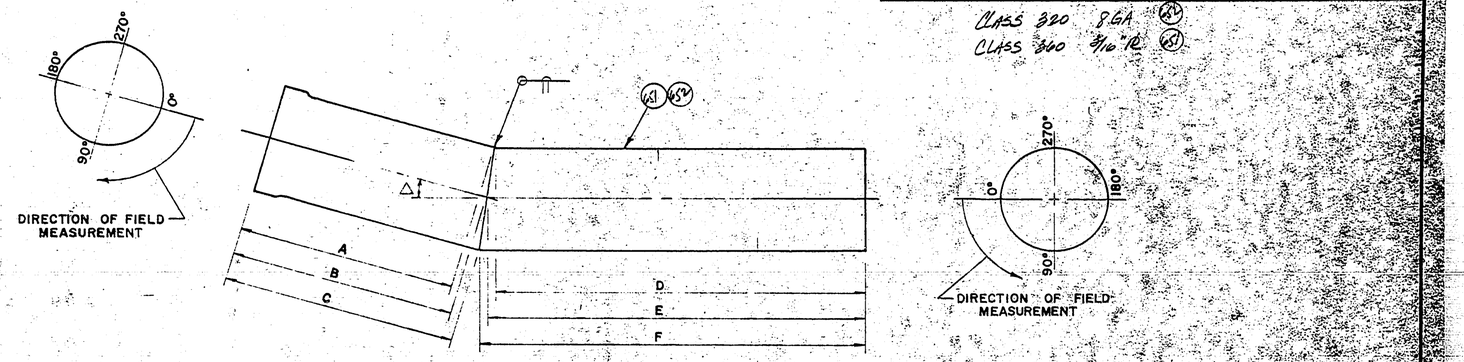

P.C. NO.	CUT SECT.	CLASS	CMC	CML	△	CUT ⊣	A	B	C	D	E	F	CHORD	F.T. LOCATION SPIGOT END ANGULAR	SPIGOT END CIRCUM.	BELL END ANGULAR	BELL END CIRCUM.	O.D. CYLINDER
1729	—	360	.75	.75	7°20'	3°40'	38'-2.14"	38'-3.74"	38'-5.34"	2'-9.58"	2'-10.18"	2'-11.78"	41'-1.66"	270	—	270	—	
2054	—	320	.75	.75	17°14'	8°35'	5'-10.12"	6'-1.89	6'-5.66	34'-6.46"	35'-0.17"	35'-3.94"	40'-11.25"	270	—	270	—	
2064	—	360	.75	.75	16°08'	8°04'	6'-7.31"	6'-10.85	7'-2.39"	33'-11.59"	34'-3.13"	34'-6.67"	40'-11.25"	90	—	90	—	

CHANGE ORDERS	SYMBOL	REVISION	DATE	BY	APP'D

UNLESS OTHERWISE SPECIFIED DIMENSIONS ARE IN INCHES
TOLERANCES
FRACT. ± | .X ± | .XX ± | .XXX ± | ANGLE ±

DWG. SCALE

Ameron PIPE PRODUCTS GROUP

RUSSIAN RIVER - CONTRACT #2

DRAWN [illegible] 8-2-76
CHECKED
APP'D

2314

60-4-102.230.74

1000 1000 (8/70)

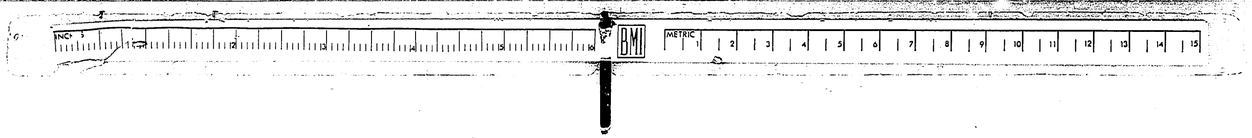

I-CUT

FLAG	ITEM NO.	QUANTITY THIS DWG.	DESCRIPTION	MATERIAL SPECIFICATION
	651	41'-2"	49.875" O.D. x 3/16" R CYL	

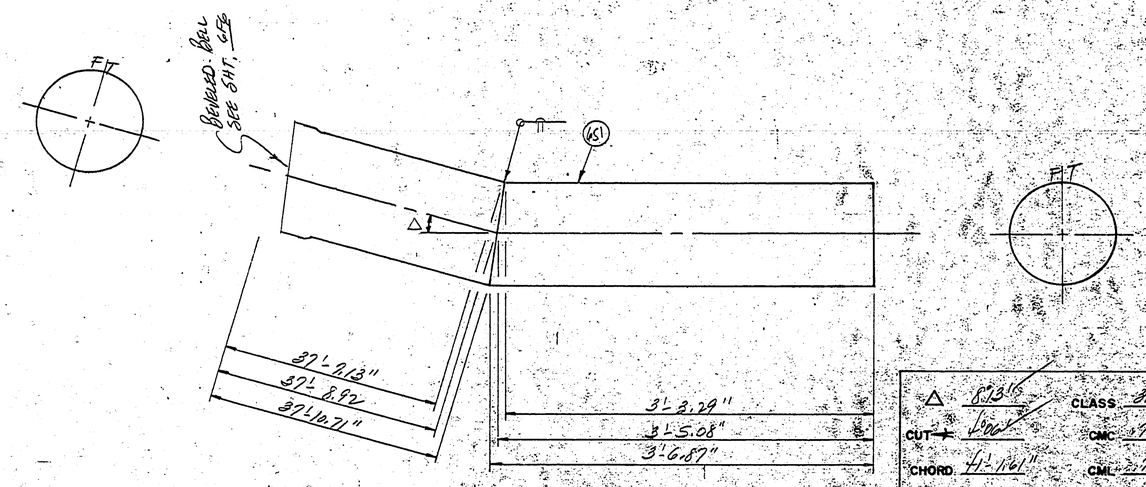

△	8°13'	CLASS	360
CUT	4°06'	CMC	.75
CHORD	41'-1.61"	CML	.75

1750
6010

Ameron PIPE PRODUCTS GROUP

Russian River Contract #2

CHANGE ORDERS	SYMBOL	REVISION	DATE	BY	APPV'D.

UNLESS OTHERWISE SPECIFIED DIMENSIONS ARE IN INCHES

TOLERANCES

FRACT.	X	XX	XXX	ANGLE
±	±	±	±	±

DWG. SCALE

DRAWN	KW	3-2-76	60-4-102.230.75
CHECKED			2314
APPV'D.			

6F30.0

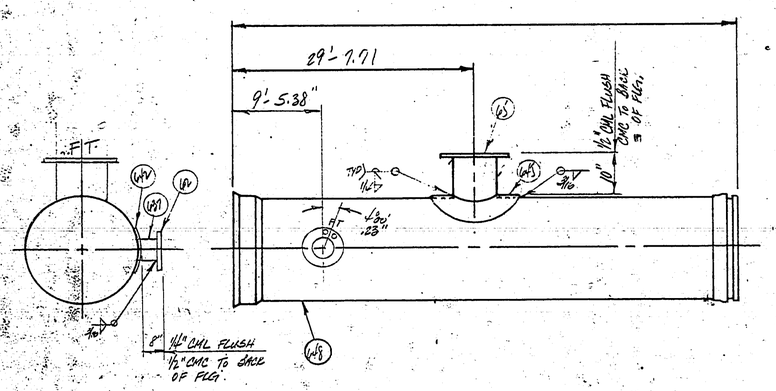

FLAG	ITEM NO.	QUANTITY THIS DWG	DESCRIPTION	MATERIAL SPECIFICATION
	648	41'-3.25"	49.875" O.D. x 3/16" PL CYL	
	65	1	18" CL. ⌀ SKIRTED FLG. 12.50" OAL. SEE SPT. 6B	
	645	1	38.25" O.D. x 1/4" PL COLLAR ROLL TO 24.94" R.	
	62	1	6" x 150# SLIP-ON FLG. F.F.	
	637	9"	6" STD WT. STEEL PIPE	
	642	1	12" SQ x 1/4" PL COLLAR ROLL TO 24.94" R.	

CLASS 360
CMC .75
CML .75

1778
6L47

Ameron PIPE PRODUCTS GROUP

RUSSIAN RIVER - CONTRACT # 2

CHANGE ORDERS	SYMBOL	REVISION	DATE	BY	APPV'D

UNLESS OTHERWISE SPECIFIED DIMENSIONS ARE IN INCHES

TOLERANCES

FRACT.	.X	.XX	.XXX	ANGLE
±	±	±	±	±

DWG. SCALE

DRAWN	KW	3-3-76
CHECKED		
APPV'D		

2314

60-4-102.230.76

6F31.0

1000-1000 (8/70)

FLAG	ITEM NO	QUANTITY THIS DWG	DESCRIPTION	MATERIAL SPECIFICATION
	649	—	49.875" O.D. × 8GA CYL.	
	65	7	18" CL. "D" SKIRTED FLG. 12.50" OAL	SEE SHT 6B1
	645	7	38.25" O.D. × 1/4 PL COLLAR ROLL TO 24.94 PL	

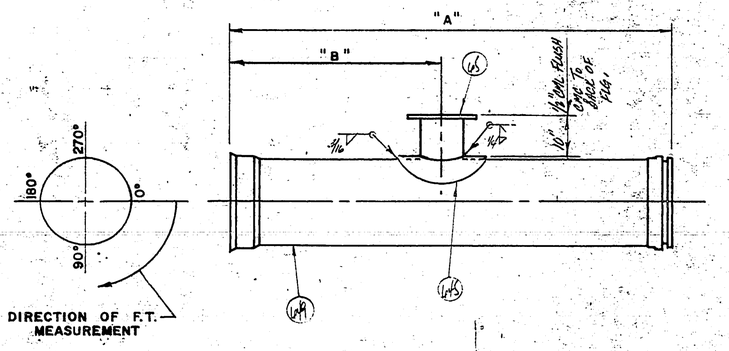

PC. NO.	CUT SECT.	CLASS	"A"	"B"	FT. LOCATION ANGULAR	FT. LOCATION CIRCUM.	REF. SHT.
1844	—	320	41'-3.25"	34'-6.36"	270	—	6F3
1890	—	320		37'-0"	270	—	—
1939	—	320		4'-0"	270	—	—
1975	—	320		36'-0"	270	—	—
2067	—	320		34'-3.72"	270	—	—
2111	—	320		37'-0"	270	—	—
2145	—	320		36'-0"	270	—	—

CHANGE ORDERS	SYMBOL	REVISION	DATE	BY	APPV'D

UNLESS OTHERWISE SPECIFIED DIMENSIONS ARE IN INCHES

TOLERANCES

FRACT	X	XX	XXX	ANGLE
±	±	±	±	±

DWG SCALE

Ameron PIPE PRODUCTS GROUP

Russian River - Contract #2

DRAWN KW 2-27-76

CHECKED

APPV'D

60-4-102.230.77

2314

6F3260

I-CUT

FLAG	ITEM NO.	QUANTITY THIS DWG.	DESCRIPTION	MATERIAL SPECIFICATION
	648	41'-3.25"	49.875" O.D. x 3/16" R CYL	
	614	1	2" x 3000# THREADOLET	
	640	1	3/16" R x 6" SQ COLLAR ROLL TO 34.94" R	

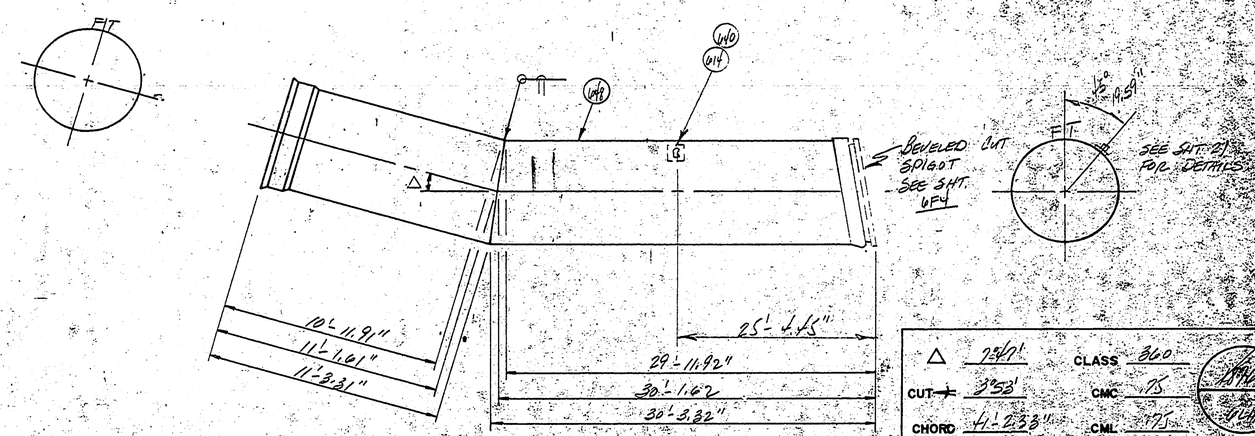

△	7°47'	CLASS	360
CUT ⊣	3°53'	CMC	.75
CHORD	41'-2.33"	CML	.75

1896
6F49

Ameron PIPE PRODUCTS GROUP

Russian River - Contract # 2

CHANGE ORDERS	SYMBOL	REVISION	DATE	BY	APPV'D

UNLESS OTHERWISE SPECIFIED DIMENSIONS ARE IN INCHES

TOLERANCES

FRACT.	.X	.XX	.XXX	ANGLE
±	±	±	±	±

DWG. SCALE

DRAWN	LW	3-2-76
CHECKED		
APPV'D		

60-4-102.230.78

8314

6F33.0

1000-1000 (8/70)

FLAG	ITEM NO.	QUANTITY THIS DWG.	DESCRIPTION	MATERIAL SPECIFICATION
	—	—	49.875" O.D.	
	614	1	2" x 3000# THREDOLET	
	640	1	3/16" R x 6" SQ COLLAR ROLL TO 24.8	
	P2	1	48" SPIGOT RING	

CLASS 360 3/16 R 614

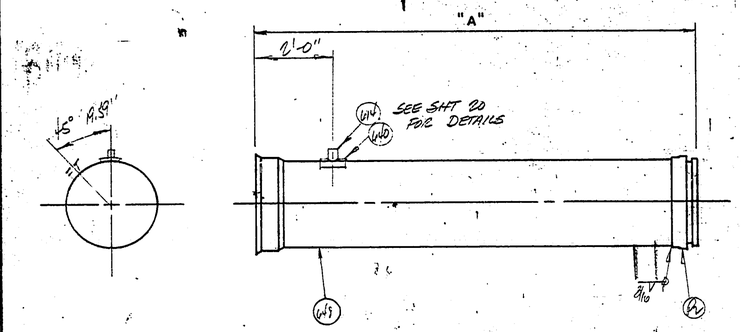

PC. NO.	CUT SECT.	CLASS	"A"			REF. SHT.
1905	36	360	16'-2.02"			—

w/ CUT SPIGOT

CHANGE ORDERS	SYMBOL	REVISION	DATE	BY	APPV'D

UNLESS OTHERWISE SPECIFIED DIMENSIONS ARE IN INCHES

TOLERANCES

FRACT.	X	XX	XXX	ANGLE
±	±	±	±	±

DWG. SCALE

Ameron PIPE PRODUCTS GROUP

RUSSIAN RIVER - CONTRACT [illegible]

DRAWN [illegible] 3-3-76

CHECKED

APPV'D.

2814

60-4-102.230.79

1000-1000 (8/70)

FLAG	ITEM NO.	QUANTITY THIS DWG.	DESCRIPTION	MATERIAL SPECIFICATION
	649	41'-3.25"	49.875" O.D. x 8GA. CYL.	
	648	1	8" x 150# SLIP-ON FLG. F.F.	
	638	9"	8" SCH 20 STEEL PIPE	
	643	1	16" SQ x 14"R COLLAR. ROLL TO 24.84"R	

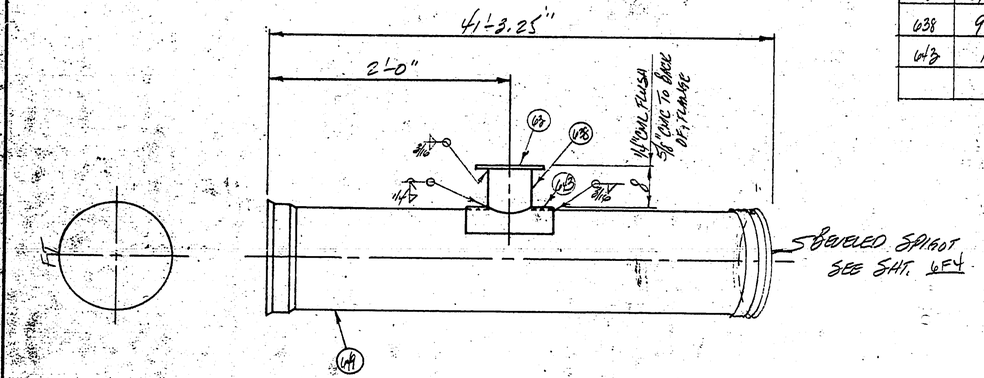

CLASS 320
CMC .75
CML .75

1837
6627

Ameron PIPE PRODUCTS GROUP

RUSSIAN RIVER - CONTRACT #2

60-4-102.230.80

2314

6P350

CHANGE ORDERS	SYMBOL	REVISION	DATE	BY	APPV'D

UNLESS OTHERWISE SPECIFIED DIMENSIONS ARE IN INCHES
TOLERANCES
FRACT ± | X ± | XX ± | XXX ± | ANGLE ±

DRAWN LW 3-3-76
CHECKED
APPV'D.
DWG. SCALE

1000-1000 (8770)

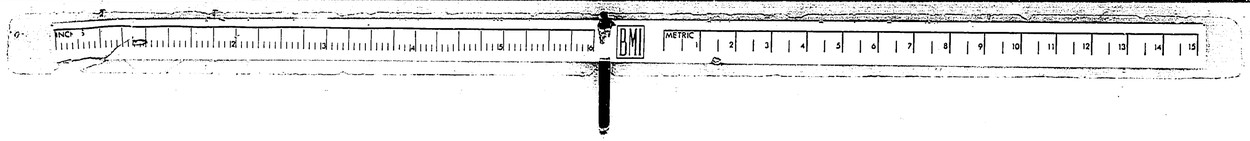

FLAG	ITEM NO.	QUANTITY THIS DWG.	DESCRIPTION	MATERIAL SPECIFICATION
	649	41'-3.25"	49.875" O.D. x 86A CYL.	
	61	1	4" x 150# SLIP-ON FLG. F.F.	
	636	9"	4" STD WT STEEL PIPE	
	641	1	8" SQ x 1/4" R COLLAR ROLL TO 24.94" R.	

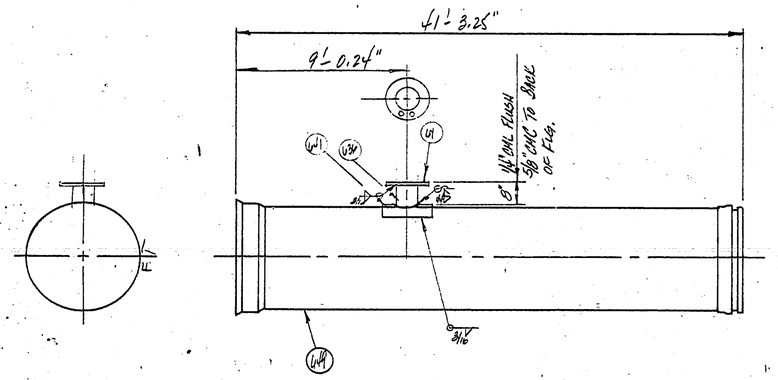

CLASS 320
CMC .75
CML .75

1946
6L22

Ameron PIPE PRODUCTS GROUP

Russian River - Contract #2

CHANGE ORDERS	SYMBOL	REVISION	DATE	BY	APPV'D.

UNLESS OTHERWISE SPECIFIED DIMENSIONS ARE IN INCHES

TOLERANCES

FRACT.	.X	.XX	.XXX	ANGLE
±	±	±	±	±

DWG. SCALE

DRAWN	KW	3-3-76	60-4-102.230.81
CHECKED			2314
APPV'D.			6F36.0

I-CUT

FLAG	ITEM NO.	QUANTITY THIS DWG.	DESCRIPTION	MATERIAL SPECIFICATION
	649	41'-3.25"	49.875" O.D. x 8GA. CYL.	
	614	1	2" x 3000# THREDOLET	
	640	1	3/16" R x 6" SQ COLLAR ROLL TO 24.94" R	

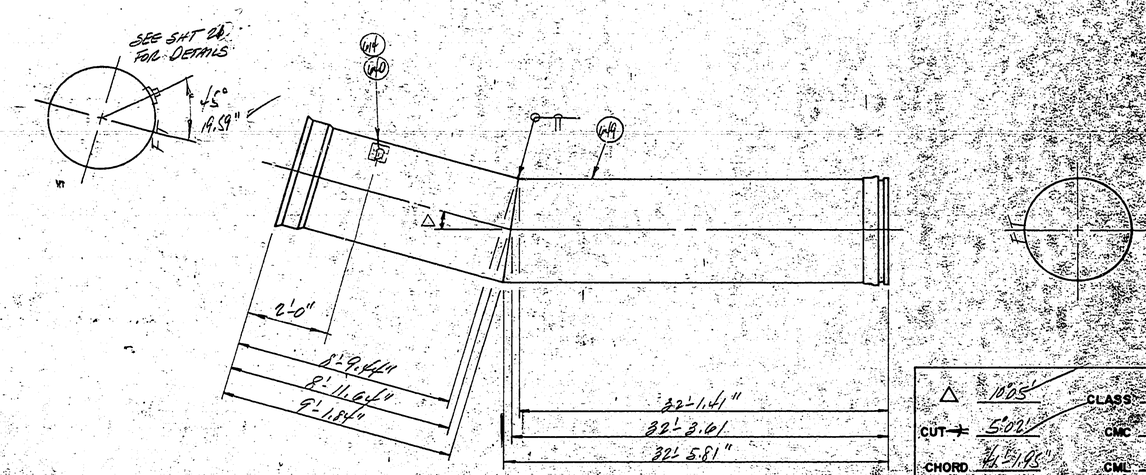

△	10°05'	CLASS	320
CUT	5°02'	CMC	.75
CHORD	41'-1.95"	CML	.75

2009
16024

Ameron PIPE PRODUCTS GROUP

Russian River - Contract #2

CHANGE ORDERS	SYMBOL	REVISION	DATE	BY	APPV'D

UNLESS OTHERWISE SPECIFIED DIMENSIONS ARE IN INCHES

TOLERANCES

FRACT.	.X	.XX	.XXX	ANGLE
±	±	±	±	±

DWG. SCALE

DRAWN	LW	3-2-76
CHECKED		
APPV'D		

2314

6-37-0

60-4-102.230.82

1000-1000 (8/70)

FLAG	ITEM NO.	QUANTITY THIS DWG.	DESCRIPTION	MATERIAL SPECIFICATION
	652	41'-2"	49.875" O.D. x 8 GA. CYL.	
	65	1	18" CL. "D" SKIRTED FLG. 12.50" OAL. SEE SHT. 6B1	
	645	1	38.25" O.D. x 1/4" PL COLLAR ROLL TO 24.94" R.	

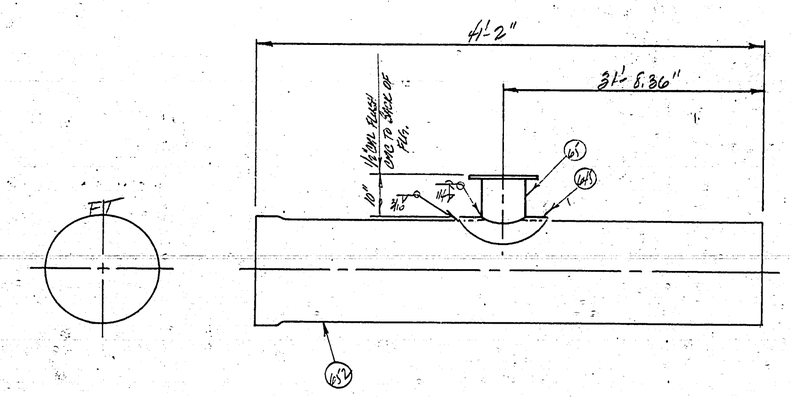

CLASS 320
CMC .75
CML .75
2030
6625

Ameron PIPE PRODUCTS GROUP

Russian River - Contract #2

CHANGE ORDERS	SYMBOL	REVISION	DATE	BY	APPV'D.

UNLESS OTHERWISE SPECIFIED DIMENSIONS ARE IN INCHES

TOLERANCES

FRACT.	.X	XX	.XXX	ANGLE
±	±	±	±	±

DWG. SCALE

DRAWN	KW	3-3-76
CHECKED		
APPV'D.		

2314

60-4-102.230.83

6F38.0

FLAG	ITEM NO.	QUANTITY THIS DWG.	DESCRIPTION	MATERIAL SPECIFICATION
	67	1	48" CL. "D" SKIRTED FLG. SEE SHT. 6B1	
	614	1	2" x 3000# THREDOLET	

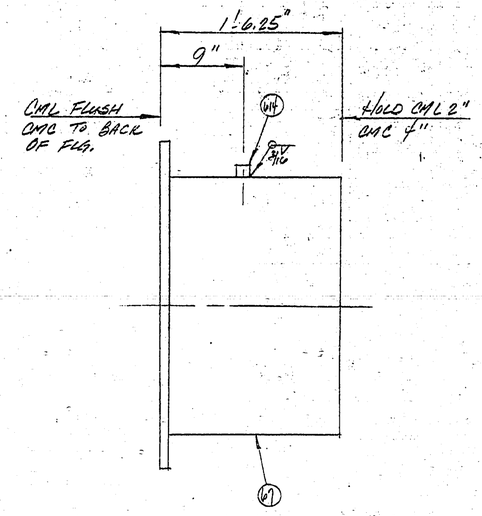

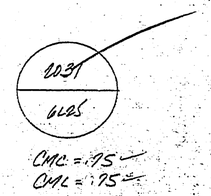

CHANGE ORDERS	SYMBOL	REVISION	DATE	BY	APPV'D.

UNLESS OTHERWISE SPECIFIED DIMENSIONS ARE IN INCHES

TOLERANCES

FRACT.	X	XX	XXX	ANGLE
±	±	±	±	±

DWG. SCALE

Ameron PIPE PRODUCTS GROUP

RUSSIAN RIVER - CONTRACT #2

DRAWN	KW	3-3-76
CHECKED		
APPV'D.		

60-4-102.230.84

2314

UF39.0

1000-1000 (8/70)

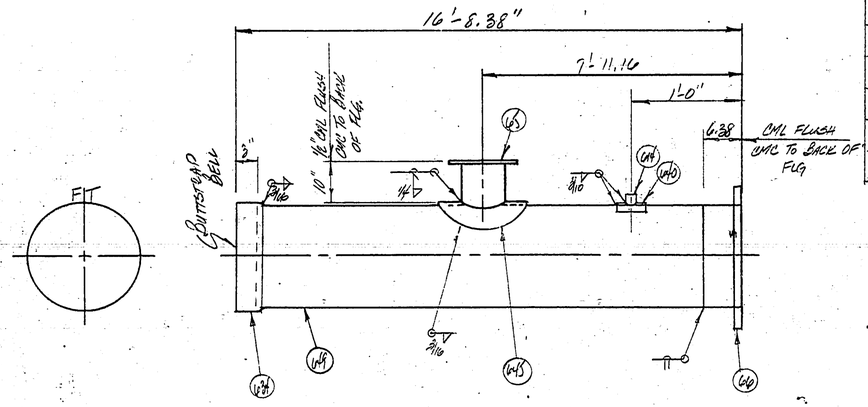

FLAG	ITEM NO	QUANTITY THIS DWG.	DESCRIPTION	MATERIAL SPECIFICATION
	649	15'-11"	49.875"O.D. x 8GA CYL	
	66	1	48"CL."D" SKIRTED FLG. SEE SHT. 601	
	65	1	18"CL."D" SKIRTED FLG. SEE SHT. 601	
	645	1	38.25"O.D. x 1/4"R COLLAR CML TO 24.94"R	
	614	1	8"x3000# THREDOLET	
	640	1	3/16"R x 6"SQ COLLAR CML TO 24.94"R.	
	634	1	1/4"R x 4" WIDE SUITABLE BELL CML TO 24.94"R	

CLASS 300
CMC .15
CML .75
CS# 87

CHANGE ORDERS	SYMBOL	REVISION	DATE	BY	APPV'D

UNLESS OTHERWISE SPECIFIED DIMENSIONS ARE IN INCHES
TOLERANCES
FRACT ± | .X ± | .XX ± | .XXX ± | ANGLE ±
DWG. SCALE

Ameron PIPE PRODUCTS GROUP

Russian River - Contract #2

DRAWN KW 3-3-76
CHECKED
APPV'D.

2314 OF 4010

60-4-102.230.85

I-CUT

FLAG	ITEM NO.	QUANTITY THIS DWG.	DESCRIPTION	MATERIAL SPECIFICATION
	652	41'-2"	49.875" O.D. x .8GA. CYL.	
	65	1	18" EL. "D" SKIRTED FLG 12.50" OAL SEE SHT. 6B	
	645	1	38.25" O.D. x 1/4" R COLLAR ROLL TO 24.94" R.	

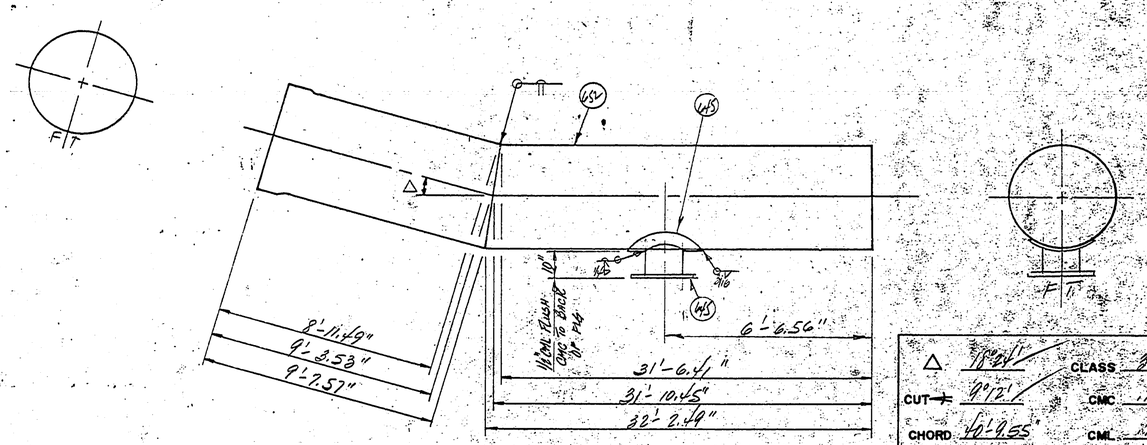

Δ 18°24'
CUT 9°12'
CHORD 40'-9.55"
CLASS 320
CMC .75
CML .75
2050
6L26

Ameron PIPE PRODUCTS GROUP

Russian River - Contract #2

CHANGE ORDERS	SYMBOL	REVISION	DATE	BY	APPV'D

UNLESS OTHERWISE SPECIFIED DIMENSIONS ARE IN INCHES

TOLERANCES

FRACT.	.X	.XX	.XXX	ANGLE
±	±	±	±	±

DWG. SCALE

DRAWN	KW	3-2-76
CHECKED		
APPV'D		

60-4-102.230.86

2314 OF 4.0

1000-1000 (8/70)

FLAG	ITEM NO.	QUANTITY THIS DWG.	DESCRIPTION	MATERIAL SPECIFICATION
	611	1	18" SPEC. BLIND FLG. w/ 12" DRILL & TAPS. SEE SHT. 6B3	

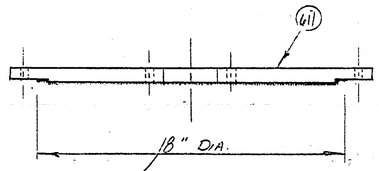

2053A
6L26

CHANGE ORDERS	SYMBOL	REVISION	DATE	BY	APPV'D.

UNLESS OTHERWISE SPECIFIED DIMENSIONS ARE IN INCHES

TOLERANCES

FRACT.	.X	.XX	.XXX	ANGLE
±	±	±	±	±

DWG. SCALE

Ameron PIPE PRODUCTS GROUP

RUSSIAN RIVER - CONTRACT #2

DRAWN	LW	3-3-76	60-4-102.230.87
CHECKED			2314
APPV'D.			6F42.0

FLAG	ITEM NO.	QUANTITY THIS DWG.	DESCRIPTION	MATERIAL SPECIFICATION
	139C		12" SCH 20 STEEL PIPE	
	144		12" x 300# FLG. F.F.	
	147	2	12" TENSION LUG. SEE SHT. 10B&C	
*				

* CONTRACTOR TO SUPPLY FLANGE DIMENSIONS OF VALVE & PRESSURE RELIEF VALVE

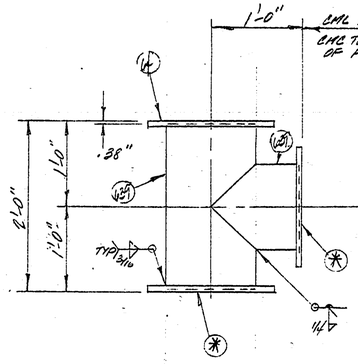

2053B / 6137

CML = .38"
CMC = .50"

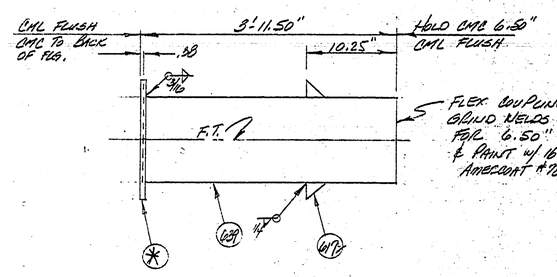

2053D / 6137

CML = .38"
CMC = .50"

CHANGE ORDERS	SYMBOL	REVISION	DATE	BY	APPV'D.

UNLESS OTHERWISE SPECIFIED DIMENSIONS ARE IN INCHES

TOLERANCES	FRACT.	.X	.XX	.XXX	ANGLE
	±	±	±	±	±

DWG. SCALE

Ameron PIPE PRODUCTS GROUP

RUSSIAN RIVER - CONTRACT #2

DRAWN	JW	3-3-70
CHECKED		
APPV'D.		

2314

60-4-102.230.88

6 OF 13.0

1000-1000 (8/70)

FLAG	ITEM NO.	QUANTITY THIS DWG.	DESCRIPTION	MATERIAL SPECIFICATION
	611	1	12"x30" BLIND FLG W/ 3/4" TAPPED HOLE	

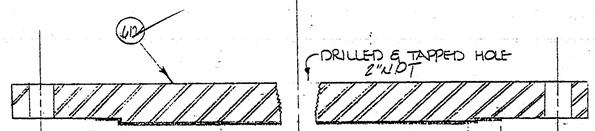

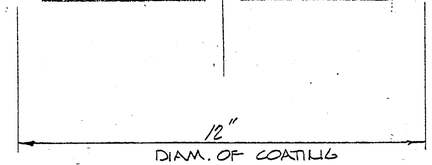

NOTE: COAT INSIDE BLIND FLG. AS SHOWN W/ 2 COATS (16 MILS) COAL TAR EPOXY - AMERCOAT #78

PC. NO.	LAYOUT REF
10582	6L37

PC. NO.	LAYOUT REF

CHANGE ORDERS	SYMBOL	REVISION	DATE	BY	APPV'D.

UNLESS OTHERWISE SPECIFIED DIMENSIONS ARE IN INCHES

TOLERANCES

FRACT.	.X	.XX	.XXX	ANGLE
±	±	±	±	±

DWG. SCALE

Ameron PIPE PRODUCTS GROUP

RUSSIAN RIVER - CONTRACT # 2

DRAWN	KW	4-27-76
CHECKED		
APPV'D.		

23.4

60-4-102.230.89

6 OF 440

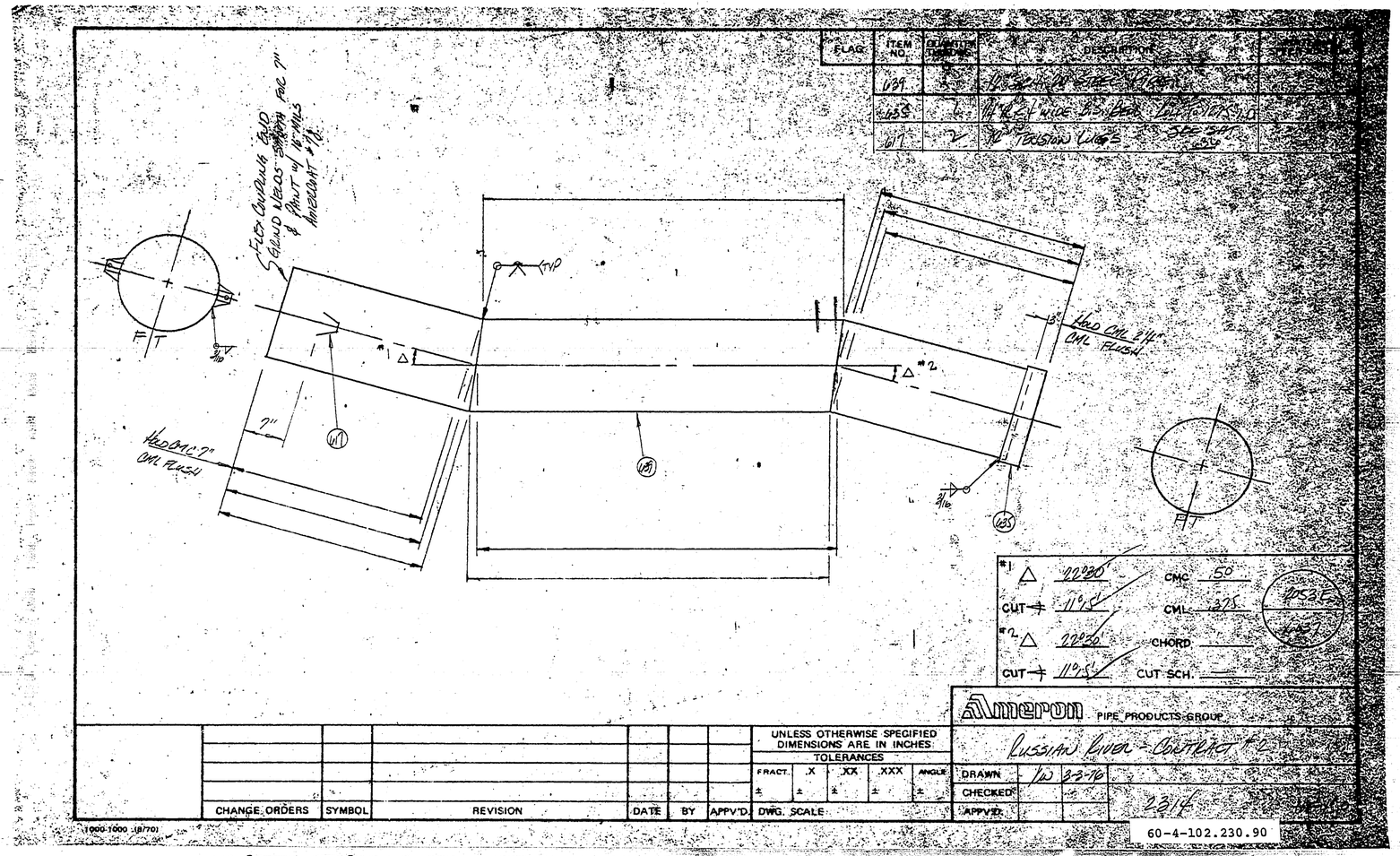

FLAG
ITEM NO.
QUANTITY THRU NO.
DESCRIPTION
639
635
617
2
12" TENSION LUGS
SEE SHT 636
FLEX COUPLING END GRIND WELDS SMOOTH FOR 7" & PAINT W/ 16 MILS AMERCOAT #70
TYP
HOLD CML 2 1/4" CML FLUSH
HOLD CML 7" CML FLUSH
7"
#1 △ 22°30'
CUT ⊣ 11°15'
#2 △ 22°30'
CUT ⊣ 11°15'
CMC .50
CML .375
CHORD
CUT SCH.
2053E
Ameron PIPE PRODUCTS GROUP
RUSSIAN RIVER - CONTRACT #2
UNLESS OTHERWISE SPECIFIED DIMENSIONS ARE IN INCHES
TOLERANCES
FRACT. ± .X ± .XX ± .XXX ± ANGLE ±
DRAWN 1/W 3-3-76
CHECKED
APPV'D
2314
CHANGE ORDERS
SYMBOL
REVISION
DATE
BY
APPV'D
DWG. SCALE
1000-1000 (8/70)
60-4-102.230.90

I-CUT

FLAG	ITEM NO.	QUANTITY THIS DWG.	DESCRIPTION	MATERIAL SPECIFICATION
	639		12" SCH 20 STEEL PIPE	
	635	1	1/4" R x 4" WIDE B.S. BELL ROLL TO 12.75 I.D.	

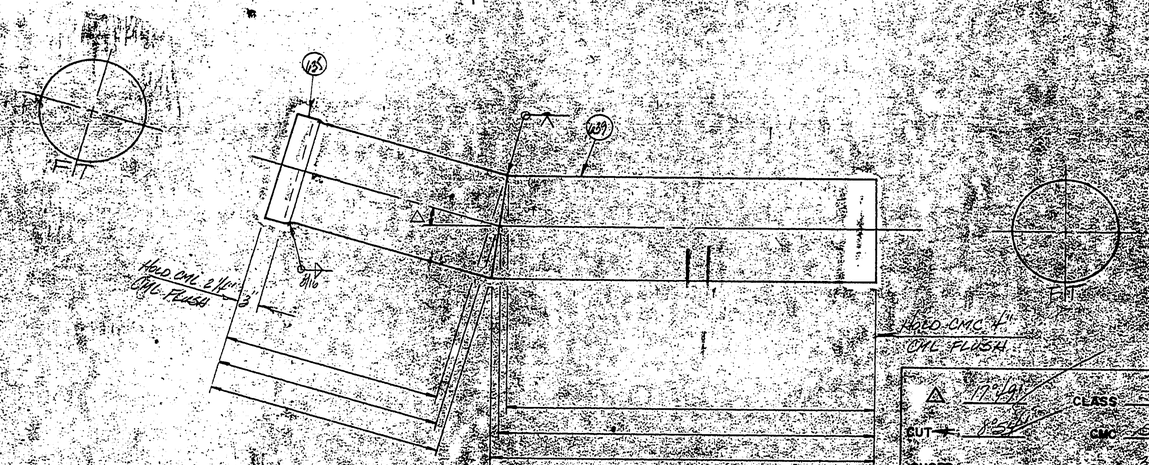

△ 17°49'
CUT 8°54'
CHORD
CLASS
CMC .50
CML .325

Ameron PIPE PRODUCTS GROUP

Russian River - Contract #2

CHANGE ORDERS	SYMBOL	REVISION	DATE	BY	APPV'D	DWG. SCALE

UNLESS OTHERWISE SPECIFIED DIMENSIONS ARE IN INCHES
TOLERANCES
FRACT ± X ± XX ± XXX ± ANGLE ±

DRAWN	LW	3-3-76
CHECKED		
APPV'D		

60-4-102.230.91

3314

6F46.0

I-CUT

FLAG	ITEM NO	QUANTITY THIS DWG.	DESCRIPTION	MATERIAL SPECIFICATION
	639		12" SCH. 20 STEEL PIPE	
	635	1	1/4" R x 4" WIDE B.S. BELL ROLL TO 12.75" I.D.	

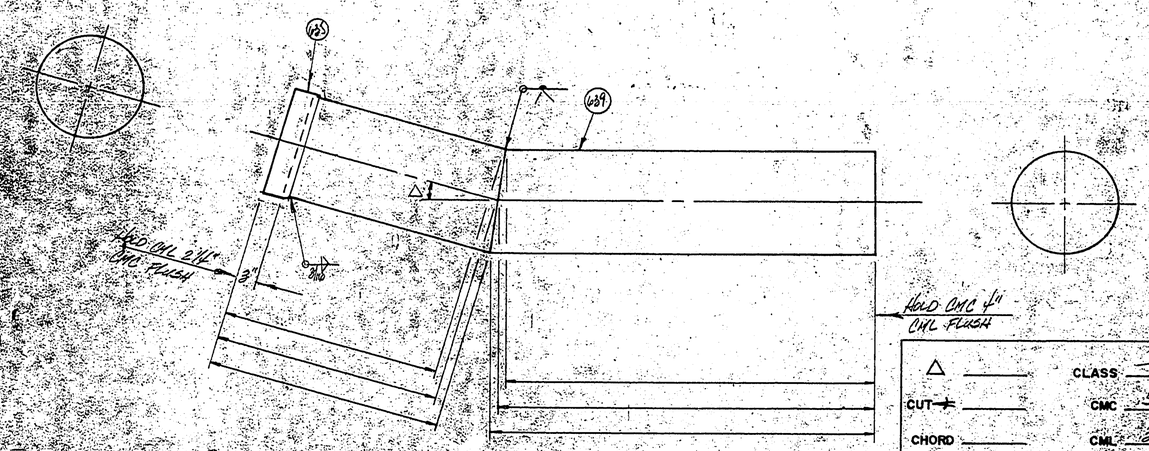

△ _____ CLASS —

CUT ⊣ _____ CMC .50

CHORD _____ CML .375

20536
6637

Ameron PIPE PRODUCTS GROUP

Russian River - Contract # 2

CHANGE ORDERS	SYMBOL	REVISION	DATE	BY	APPV'D

UNLESS OTHERWISE SPECIFIED DIMENSIONS ARE IN INCHES.

TOLERANCES

FRACT.	X	XX	XXX	ANGLE
±	±	±	±	±

DWG. SCALE

DRAWN	LW	3-3-76
CHECKED		
APPV'D		

60-4-102.230.92

2314

6F47.0

FLAG	ITEM NO.	QUANTITY THIS DWG.	DESCRIPTION	MATERIAL SPECIFICATION
	639		12" SCH 20 STEEL PIPE	
	631	16 ±	7/8" ϕ BAR SMOOTH	
	632	1	1/2" R DIFFUSER PLATE	

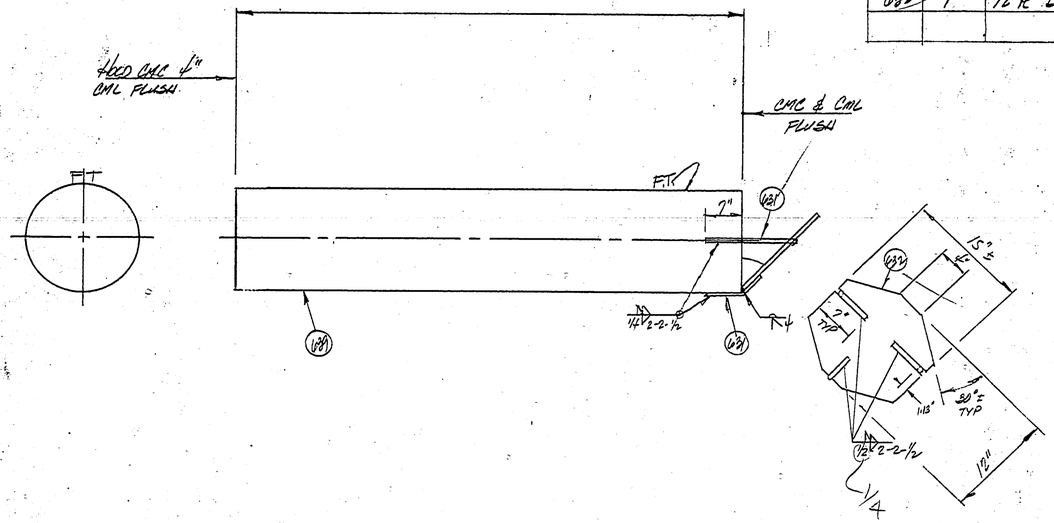

CLASS —
CMC .50
CML .375

10534
6637

CHANGE ORDERS	SYMBOL	REVISION	DATE	BY	APPV'D.

UNLESS OTHERWISE SPECIFIED DIMENSIONS ARE IN INCHES
TOLERANCES
FRACT. ± | .X ± | XX ± | .XXX ± | ANGLE ±
DWG. SCALE

Ameron PIPE PRODUCTS GROUP

RUSSIAN RIVER - CONTRACT #2

DRAWN LW 3-3-76
CHECKED
APPV'D.

60-4-102.230.93

2314

6 OF 48.0

1000 1000 (8 70)

1-CUT

FLAG	ITEM NO.	QUANTITY THIS DWG.	DESCRIPTION	MATERIAL SPECIFICATION
	651	41'-2"	49.875" O.D. x 3/16" R CYL.	
	614	1	2" x 3000# THREDOLET	
	640	1	3/16" R x 6" SQ. COLLAR ROLL TO 24.94" R	

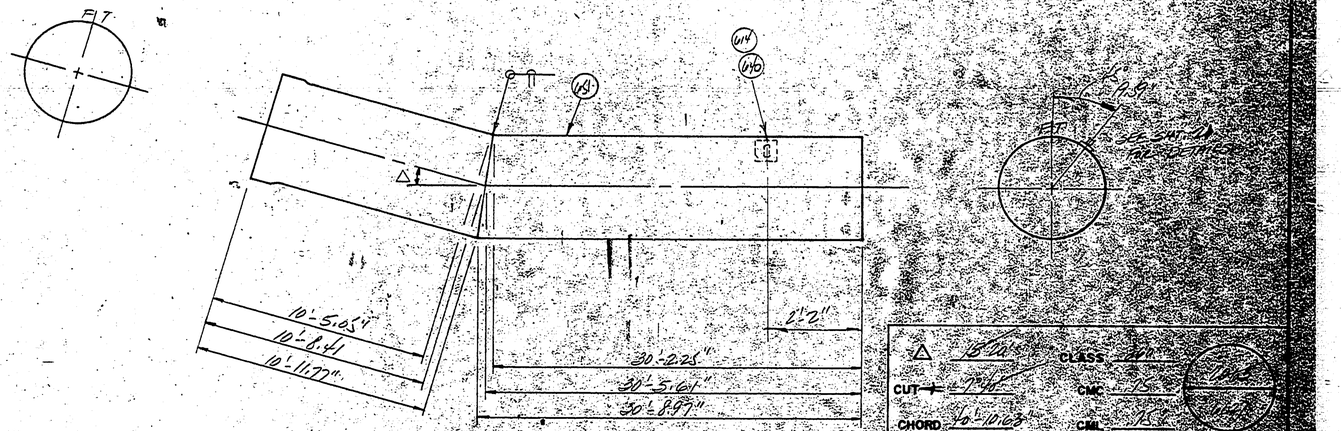

△ 15.20' CLASS 24"
CUT 7.40' CMC .75
CHORD 40'-10.63" CML .75

Ameron PIPE PRODUCTS GROUP

Russian River - Contract #2

CHANGE ORDERS	SYMBOL	REVISION	DATE	BY	APPV'D

UNLESS OTHERWISE SPECIFIED DIMENSIONS ARE IN INCHES

TOLERANCES

FRACT.	X	XX	XXX	ANGLE
±	±	±	±	±

DWG. SCALE

DRAWN	LW	3-2-76
CHECKED		
APPV'D		

2-3-74

60-4-102.230.94

1000-1000 (8/70)

I-CUT

FLAG	ITEM NO.	QUANTITY THIS DWG.	DESCRIPTION	MATERIAL SPECIFICATION
	649	41'-3.25"	49.875" O.D. X 8GA. CML.	
	614	1	2" x 3000# THREDOLET	
	640	1	3/16" R x 6" SQ COLLAR ROLL TO 24.94" R	

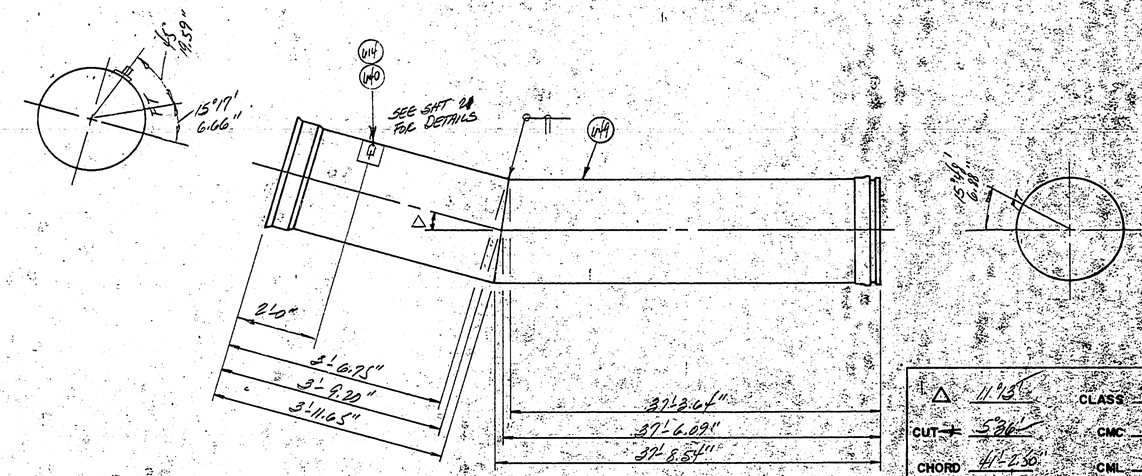

△ 11°15' CLASS 320
CUT 5°36' CMC .05
CHORD 41'-2.50" CML .75

Ameron PIPE PRODUCTS GROUP

Russian River Contract #2

CHANGE ORDERS	SYMBOL	REVISION	DATE	BY	APPV'D

UNLESS OTHERWISE SPECIFIED DIMENSIONS ARE IN INCHES

TOLERANCES

FRACT.	.X	.XX	.XXX	ANGLE
±	±	±	±	±

DWG. SCALE

DRAWN KW 3-2-76
CHECKED
APPV'D.

2314 6F50.0

60-4-102.230.95

FLAG	ITEM NO.	QUANTITY THIS DWG.	DESCRIPTION	MATERIAL SPECIFICATION
	HS	21'-0"	49.875" OD. X 10GA. CYL.	
	P2	1	48" SPIGOT RING	
	P1	1	48" BELL RING	

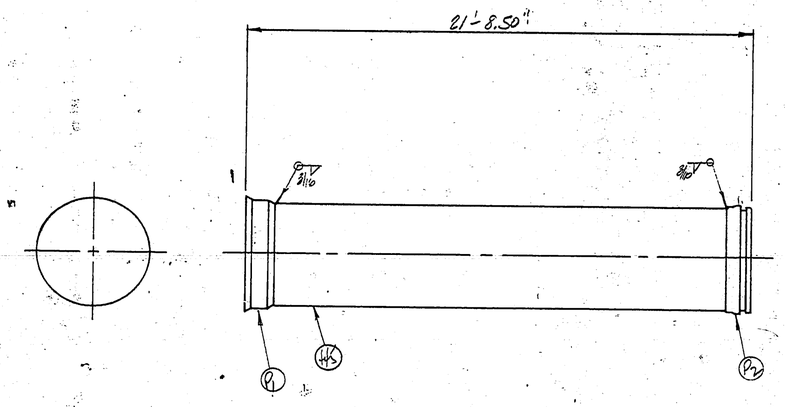

CLASS 260
CMC .75
CML .75
CS# 26

2236
6131

Ameron PIPE PRODUCTS GROUP

Russian River - Contract # 2

CHANGE ORDERS	SYMBOL	REVISION	DATE	BY	APPV'D

UNLESS OTHERWISE SPECIFIED DIMENSIONS ARE IN INCHES

TOLERANCES

FRACT.	.X	XX	.XXX	ANGLE
±	±	±	±	±

DWG. SCALE

DRAWN	KW	3-3-76
CHECKED		
APPV'D		

2314

6F51.0

60-4-102.230.96

1000-1000 (8/70)

FLAG	ITEM NO	QUANTITY THIS DWG	DESCRIPTION	MATERIAL SPECIFICATION
	650	—	49.875" O.D. × 10GA. CYL.	
	65	3	18" CL. "D" SKIRTED FLG. 12.50" OAL	SEE SHT. 631
	644	3	38.25" O.D. × 3/16 PL COLLAR ROLL TO 24.24" R	

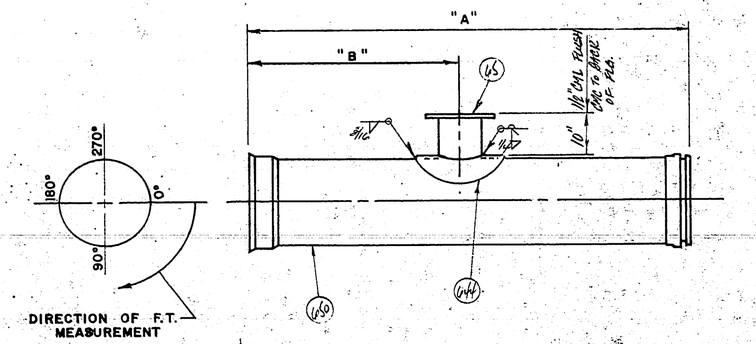

PC. NO.	CUT SECT.	CLASS	"A"	"B"	FT. LOCATION ANGULAR	FT. LOCATION CIRCUM.	REF. SHT.
2237	—	260	41'-3.25"	30'-3.24"	270	—	6FS w/CUT SPIGOT
2287	—	260		11'-3.12"	270	—	6FS
2339	—	260		21'-1.56	270	—	—

CHANGE ORDERS	SYMBOL	REVISION	DATE	BY	APPV'D

UNLESS OTHERWISE SPECIFIED DIMENSIONS ARE IN INCHES

TOLERANCES

FRACT	X	XX	XXX	ANGLE
±	±	±	±	±

DWG. SCALE

Ameron PIPE PRODUCTS GROUP

RUSSIAN RIVER - CONTRACT #2

DRAWN KW 2-27-76

CHECKED

APPV'D

60-4-102.230.97

2314 6FS2.0

1000 1000 .8 701

FLAG	ITEM NO.	QUANTITY THIS DWG.	DESCRIPTION	MATERIAL SPECIFICATION
	650	25'-10.75'	49.875" O.D. x 10GA. CYL.	
	P1	1	48" BELL RING	

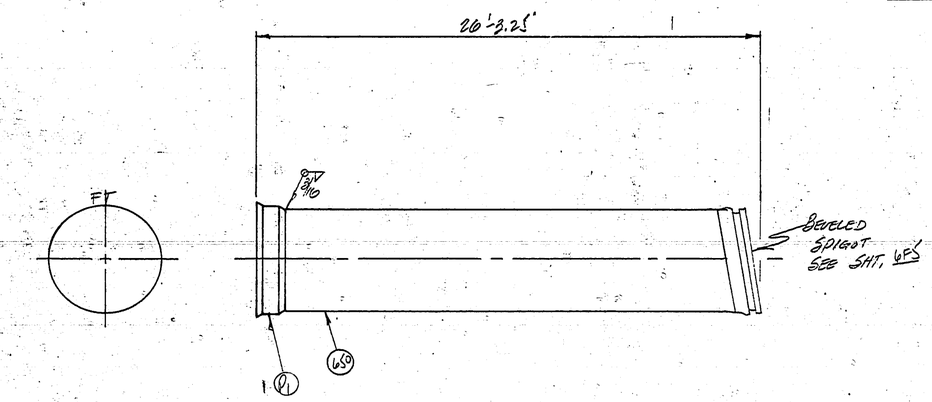

CLASS 260
CMC .75
CML .75
CS# 38

2275
6233

Ameron PIPE PRODUCTS GROUP

RUSSIAN RIVER - CONTRACT

DRAWN	KW	3-3-76			
CHECKED					
APPV'D.					

2314 6F53.0

60-4-102.230.98

UNLESS OTHERWISE SPECIFIED DIMENSIONS ARE IN INCHES

TOLERANCES

FRACT.	.X	XX	.XXX	ANGLE
±	±	±	±	±

DWG. SCALE

CHANGE ORDERS	SYMBOL	REVISION	DATE	BY	APPV'D.

1000 1000 (8-70)

I-CUT

FLAG	ITEM NO.	QUANTITY THIS DWG.	DESCRIPTION	MATERIAL SPECIFICATION
	650	41'-3.25"	49.875" O.D. x 10GA CYL.	
	614	1	2" x 3000# THREDOLET	
	640	1	3/16" PL x 6" SQ COLLAR ROLL TO 24.94" R	

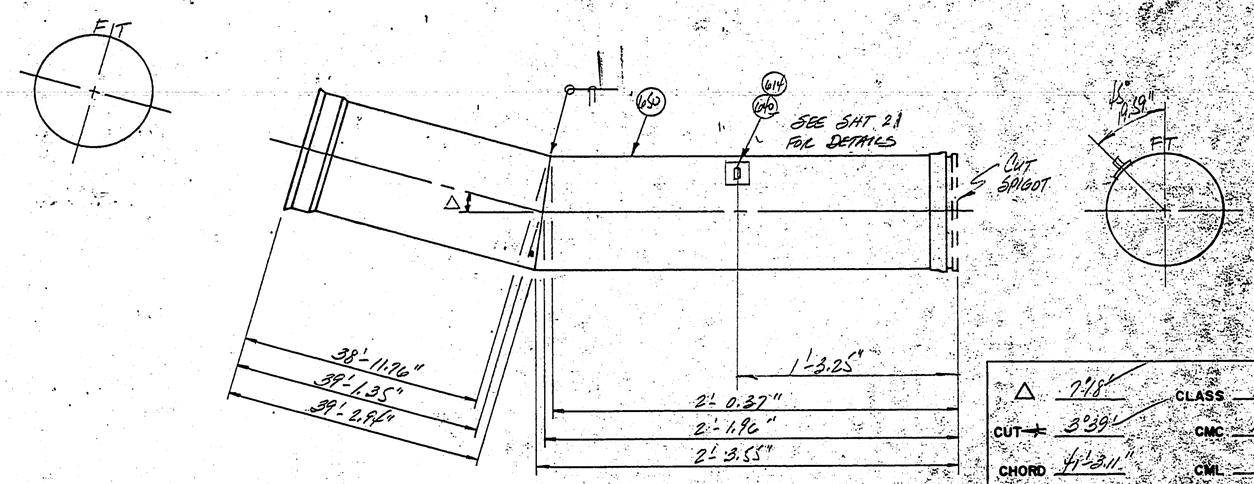

Δ	7°18'	CLASS	260
CUT	3°39'	CMC	.75
CHORD	41'-3.11"	CML	.75

2276
6L33

Ameron PIPE PRODUCTS GROUP

Russian River - Contract #2

CHANGE ORDERS	SYMBOL	REVISION	DATE	BY	APPV'D

UNLESS OTHERWISE SPECIFIED DIMENSIONS ARE IN INCHES

TOLERANCES

FRACT.	.X	.XX	.XXX	ANGLE
±	±	±	±	±

DWG. SCALE

DRAWN	RW	3-2-76
CHECKED		
APPV'D.		

2314

6F540

60-4-102.230.99

1000 1000 (8 70)

I-CUT

6P55

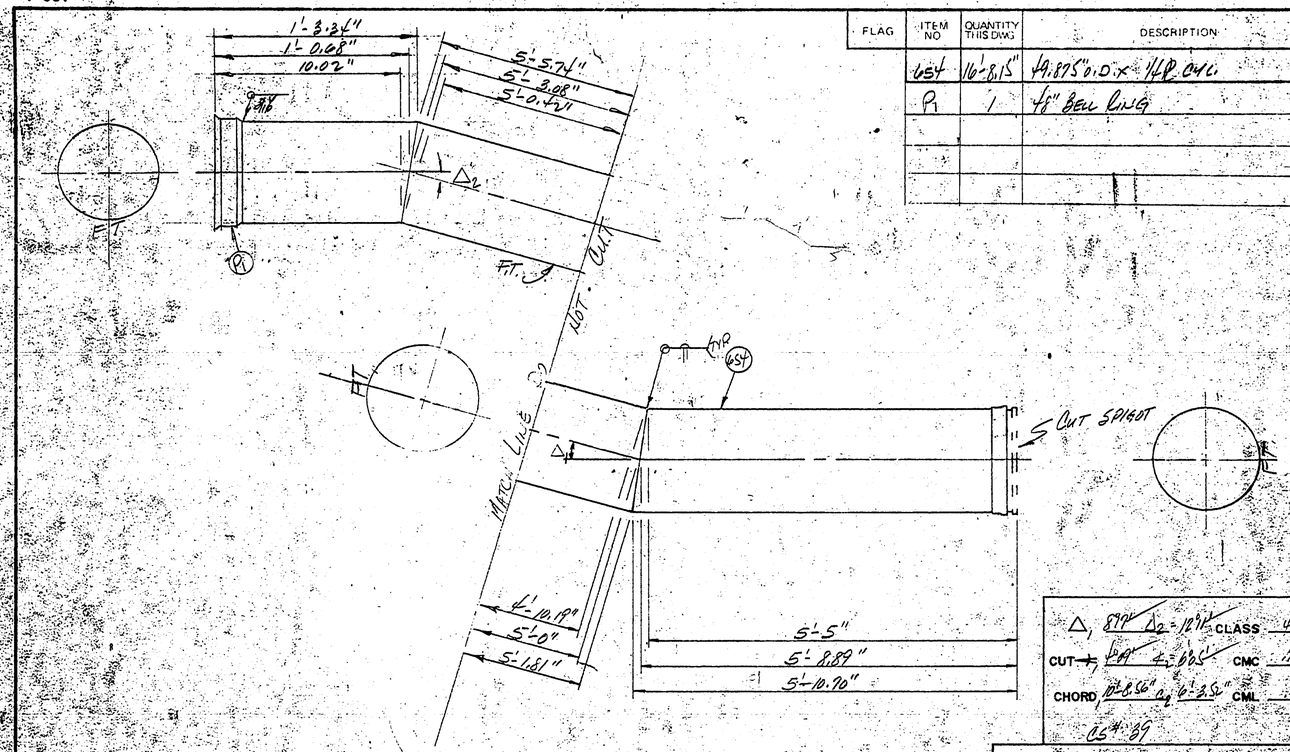

FLAG	ITEM NO	QUANTITY THIS DWG	DESCRIPTION	MATERIAL SPECIFICATION
	654	16'-8.15"	49.875" O.D. x 1/4 PL CYL.	
	P1	1	48" BELL RING	

Δ1 8°9' Δ2 = 12°11' CLASS 480

CUT 4°09' ∠ = 6°05' CMC .75

CHORD 10'-8.56" C2 6'-3.52" CML .75

CS# 39

2302

6L35

Ameron PIPE PRODUCTS GROUP

Russian River Contract #2

CHANGE ORDERS	SYMBOL	REVISION	DATE	BY	APPV'D

UNLESS OTHERWISE SPECIFIED DIMENSIONS ARE IN INCHES

TOLERANCES

FRACT.	.X	.XX	.XXX	ANGLE
±	±	±	±	±

DWG. SCALE

DRAWN	KW	3-2-76
CHECKED		
APPV'D		

2314

6F55.0

60-4-102.230.100

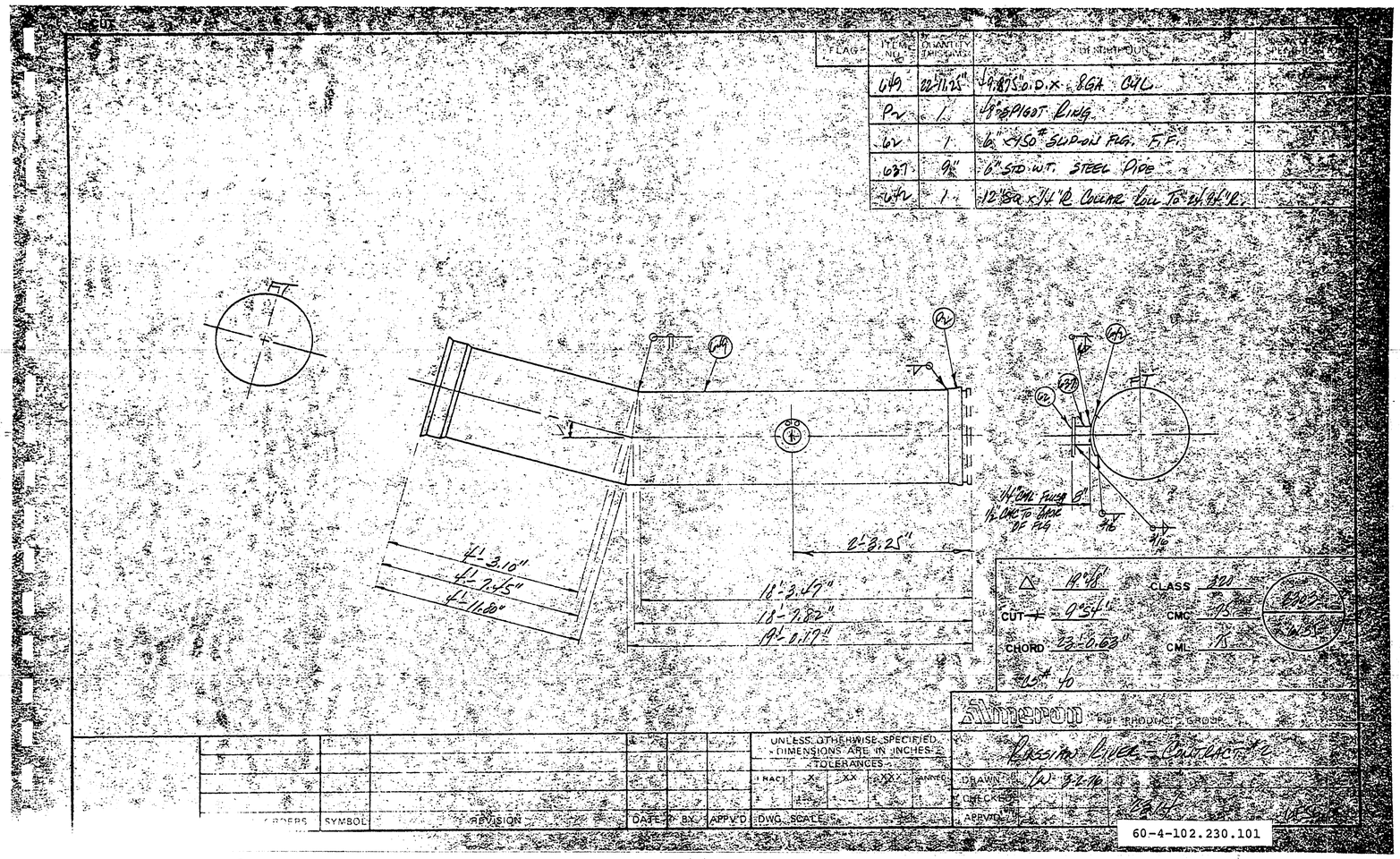

FLAG
ITEM NO.
QUANTITY THICKNESS
DESCRIPTION
649 22'-11.25" 49.875" O.D. X .8GA CYL
P2 1 48" SPIGOT RING
62 1 6" X 150# SLIP-ON FLG. F.F.
637 9" 6" STD WT. STEEL PIPE
642 1 12" SQ X 1/4" R COLLAR ROLL TO 24.94" R.
1/4" CML FULSA 8"
1/2 CMC TO BASE OF FLG
2'-3.25"
4'-3.10"
4'-7.45"
4'-11.80"
18'-3.47"
18'-7.82"
19'-0.17"
19°48'
CLASS 320
CUT 9°54'
CMC .75
CHORD 23'-0.63"
CML .75
25# 40
Ameron PIPE PRODUCTS GROUP
UNLESS OTHERWISE SPECIFIED DIMENSIONS ARE IN INCHES
TOLERANCES
FRACT X XX XXX ANNEX
DRAWN LW 3-2-76
CHECKED
APPV'D
ORDERS SYMBOL REVISION DATE BY APPV'D DWG. SCALE
60-4-102.230.101

FLAG	ITEM NO.	QUANTITY THIS DWG.	DESCRIPTION	MATERIAL SPECIFICATION
	649	18'-4"	49.875" O.D. X 8GA. CYL	
	P1	1	48" BELL RING	

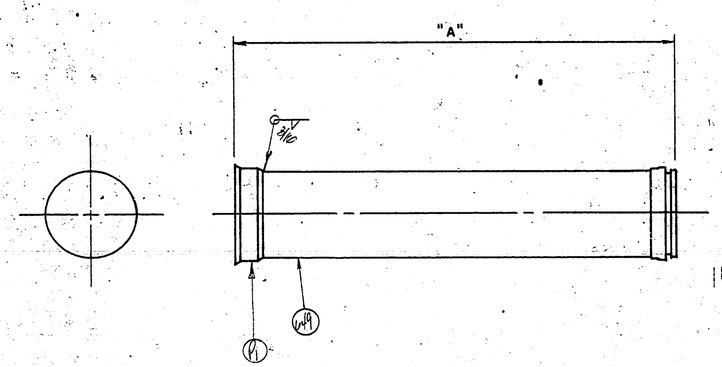

PC. NO.	CUT SECT.	CLASS	"A"			REF. SHT.
2304	40	320	18'-8.50"			—

w/CUT SPIGOT

CHANGE ORDERS	SYMBOL	REVISION	DATE	BY	APPV'D.

UNLESS OTHERWISE SPECIFIED DIMENSIONS ARE IN INCHES

TOLERANCES

FRACT.	.X	.XX	.XXX	ANGLE
±	±	±	±	±

DWG. SCALE

Ameron PIPE PRODUCTS GROUP

Russian River - Contract #2

DRAWN	LW	3-3-76
CHECKED		
APPV'D.		

2304 6F57.0

60-4-102.230.102

1000-1000 (8/70)

6F58

FLAG	ITEM NO.	QUANTITY THIS DWG.	DESCRIPTION	MATERIAL SPECIFICATION
	—	—	49.875" O.D. CYL	
	614	2	2" × 3000# THREDOLET	
	640	2	3/16" R × 6" SQ COLLAR ROLL TO 24.94" R.	

CLASS 320 8GA (649)
CLASS 260 10GA. (650)

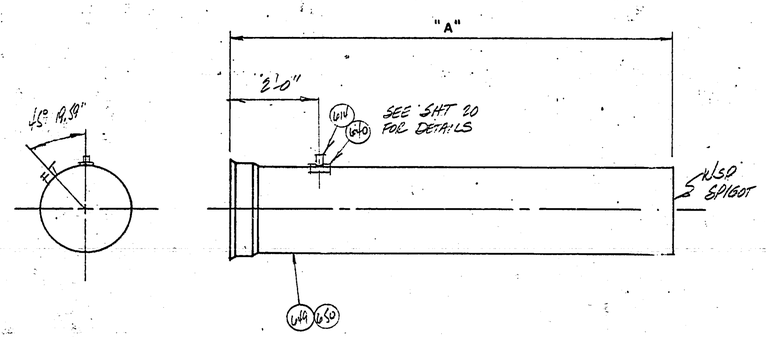

PG. NO.	CUT SECT.	CLASS	"A"			REF. SHT.
2038	—	320	40'-10.25			—
2289 ✓	41	260	14'-11.28			—

CHANGE ORDERS	SYMBOL	REVISION	DATE	BY	APPV'D.

UNLESS OTHERWISE SPECIFIED DIMENSIONS ARE IN INCHES

TOLERANCES

FRACT.	.X	.XX	.XXX	ANGLE
±	±	±	±	±

DWG. SCALE

Ameron PIPE PRODUCTS GROUP

RUSSIAN RIVER - CONTRACT #2

DRAWN	KW	3-3-76
CHECKED		
APPV'D.		

2314 6F58.0

60-4-102.230.103

FLAG	ITEM NO.	QUANTITY THIS DWG	DESCRIPTION	MATERIAL SPECIFICATION
	650	26'-3.97"	49.875 O.D. X 106A CML.	

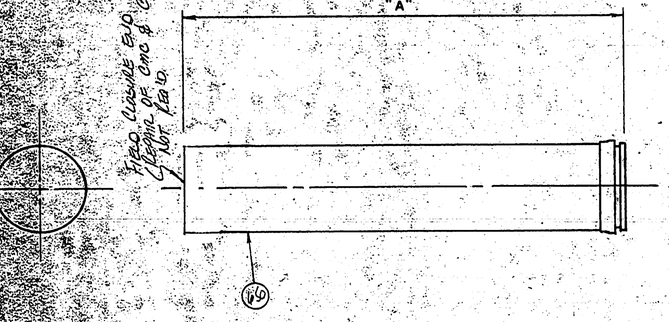

P.C. NO.	CUT SECT.	CLASS	"A"			REF. SHT.
0357	41	200	26'-3.97"			—

CHANGE ORDERS	SYMBOL	REVISION	DATE	BY	APPV'D

UNLESS OTHERWISE SPECIFIED DIMENSIONS ARE IN INCHES

TOLERANCES

FRACT.	.X	.XX	.XXX	ANGLE
±	±	±	±	±

DWG. SCALE

Ameron PIPE PRODUCTS GROUP

Russian River - Contract #2

DRAWN	KW	3-3-76
CHECKED		
APPV'D		

2814 6FS9.0

60-4-102.230.104

"D" SKIRTED

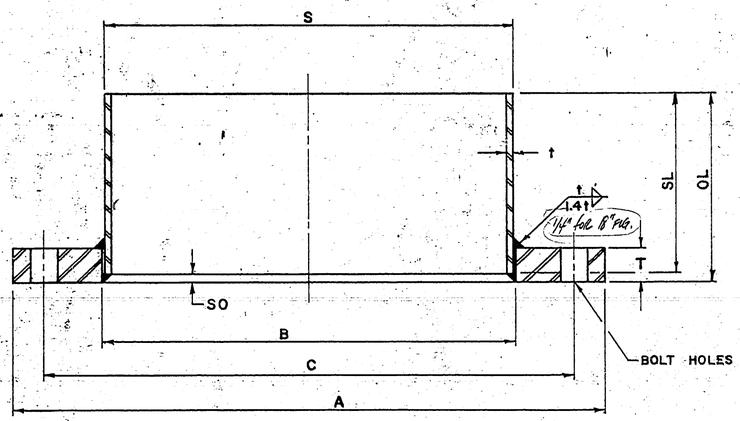

NOMINAL PIPE SIZE	MAT'L LIST NO	QUANTITY	OVERALL LENGTH OL	SKIRT LENGTH SL	SKIRT THICKNESS t	SKIRT OFFSET SO	SKIRT O.D. S	I.D. FLANGE B	O.D. FLANGE A	NUMBER BOLT HOLES	BOLT CIRCLE C	DIAM. BOLT HOLES	FLANGE THICKNESS T
24									32	20	29 1/2	1 3/8	1 1/4
30									38 3/4	28	36	1 3/8	1 3/8
36									46	32	42 3/4	1 5/8	1 5/8
42									53	36	49 1/2	1 5/8	1 3/4
48	66		6'38	6'00	1/4	.38	49.875	49.94	59 1/2	44	56	1 5/8	1 3/4
54									66 1/4	44	62 3/4	1 7/8	2 1/8
60									73	52	69 1/4	1 7/8	2 1/4
48	67		1'6.25"	18"	1/4	1/4	49.875	49.94	59 1/2	44	56	1 5/8	1 3/4
18	65'		12.50	12.00	.50	.50	18.00	18.06	25	16	22 3/4	1 1/4	1 1/16

SPECIFICATIONS

STEEL:

FLANGE - ASTM A-283, Gr. B, C or D
SKIRT - ASTM A-283, Gr. C or D
ASTM A-570, Gr. C

FACING:

FINAL MACHINING OF THE FLANGES SHALL BE DONE ONLY AFTER ALL WELDING TO THE PIPE SKIRT IS COMPLETED. FLANGES SHALL BE FACED NORMAL TO THE LONGITUDINAL AXIS OF THE PIPE. THE FLANGES SHALL BE FACED SMOOTH OR MAY HAVE A SERRATED FINISH OF APPROXIMATELY 32 SERRATIONS PER INCH, APPROXIMATELY 1/64" DEEP. SERRATIONS MAY BE SPIRAL OR CONCENTRIC. EDGES OF FACED SURFACES AND BOLT HOLES SHALL BE DEBURRED.

TOLERANCES:

INSIDE DIAMETER + 1/16" - 0"

OUTSIDE DIAMETER ± 1/8"

THICKNESS OF FLANGES + 1/8" - 0"

BOLT CIRCLE ± 1/16"

OUTSIDE DIAMETER SKIRT ± 0.080" MEASURED AT ANY POINT

BOLT HOLES SHALL BE EQUALLY SPACED ± 1/64

DIAMETERS A, B AND C TO BE CONCENTRIC ABOUT CENTERLINE ± 1/16"

SKIRT CLOSING SEAMS SHALL BE FULL PENETRATION BUTTWELD WITH 1/16" MAX. CROWN

SYMBOL	REVISION	DATE	BY	APPV'D
	1			

Ameron PIPE PRODUCTS GROUP

Russian River - Contract #2

DRAWN	KW	33-76	AWWA CLASS "D" SKIRTED FLG.
CHECKED			23.14 6.81.0
APPV'D			60-4-102.230.105

"D" BLIND

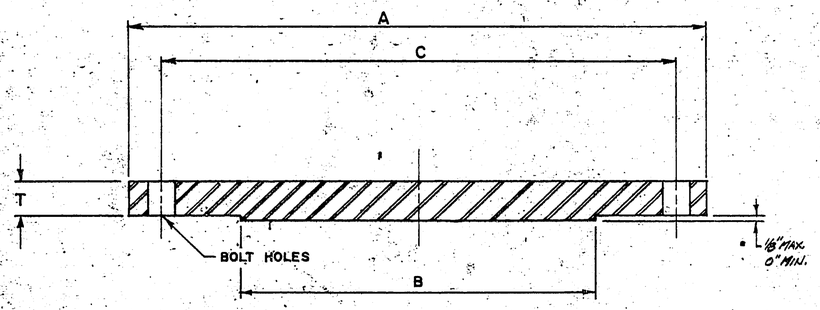

NOMINAL PIPE SIZE	MAT'L LIST NO	QUANTITY	RAISED FACE B	O.D. FLANGE A	NUMBER BOLT HOLES	BOLT CIRCLE C	DIAM. BOLT HOLES	FLANGE THICKNESS T
12			11	19	12	17	1	13/16
14			13	21	12	18 3/4	1 1/8	15/16
16			15	23 1/2	16	21 1/4	1 1/8	1
18	(24)		17	25	16	22 3/4	1 1/4	1 1/16
20			19	27 1/2	20	25	1 1/4	1 1/8
24			23	32	20	29 1/2	1 3/8	1 1/4
30			29	38 3/4	28	36	1 3/8	1 3/8
36			35	46	32	42 3/4	1 5/8	1 5/8
42			41	53	36	49 1/2	1 5/8	1 3/4
48			47	59 1/2	44	56	1 5/8	1 3/4

SPECIFICATIONS

STEEL:
ASTM A-283, Gr. B,C or D

FACING:
THE FLANGES SHALL BE FACED SMOOTH OR MAY HAVE A SERRATED FINISH OF APPROXIMATELY 32 SERRATIONS PER INCH, APPROXIMATELY 1/64" DEEP. SERRATIONS MAY BE SPIRAL OR CONCENTRIC. EDGES OF FACED SURFACES AND BOLT HOLES SHALL BE DEBURRED.

TOLERANCES:

RAISED FACE DIAMETER +0" - 1/8"

OUTSIDE DIAMETER ± 1/8"

THICKNESS OF FLANGES +1/8" -0"

BOLT CIRCLE ± 1/16"

BOLT HOLES SHALL BE EQUALLY SPACED ± 1/64"

DIAMETERS A, B AND C TO BE CONCENTRIC ABOUT CENTERLINE ± 1/16"

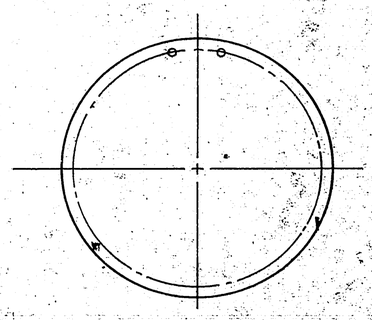

SYMBOL	REVISION	DATE	BY	APPV'D.

Ameron PIPE PRODUCTS GROUP

Russian River - Contract #2

DRAWN	LW	8-3-76
CHECKED		
APPV'D.		

AWWA CLASS "D" BLIND FLG.

2314 682.0

60-4-102.230.106

"D" BLIND

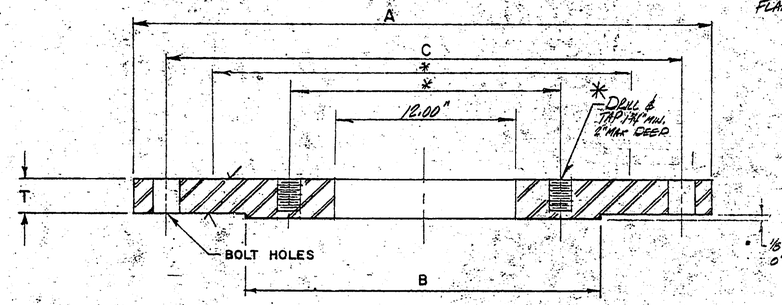

* CONTR. TO SUPPLY VALVE FLANGE DIMENSIONS

NOMINAL PIPE SIZE	MAT'L LIST NO	QUANTITY	RAISED FACE B	O.D. FLANGE A	NUMBER BOLT HOLES	BOLT CIRCLE C	DIAM. BOLT HOLES	FLANGE THICKNESS T
12			11	19	12	17	1	13/16
14			13	21	12	18 3/4	1 1/8	15/16
16			15	23 1/2	16	21 1/4	1 1/8	1
18	611		16	28	24	24 3/4	1 3/8	2 3/8
20			19	27 1/2	20	25	1 1/4	1 1/8
24			23	32	20	29 1/2	1 3/8	1 1/4
30			29	38 3/4	28	36	1 3/8	1 3/8
36			35	46	32	42 3/4	1 5/8	1 5/8
42			41	53	36	49 1/2	1 5/8	1 3/4
48			47	59 1/2	44	56	1 5/8	1 3/4

SPECIFICATIONS

STEEL:
ASTM A-283, Gr. B, C or D

FACING:
THE FLANGES SHALL BE FACED SMOOTH OR MAY HAVE A SERRATED FINISH OF APPROXIMATELY 32 SERRATIONS PER INCH, APPROXIMATELY 1/64" DEEP. SERRATIONS MAY BE SPIRAL OR CONCENTRIC. EDGES OF FACED SURFACES AND BOLT HOLES SHALL BE DEBURRED.

TOLERANCES:
RAISED FACE DIAMETER +0" − 1/8"
OUTSIDE DIAMETER ± 1/8"
THICKNESS OF FLANGES + 1/8" − 0"
BOLT CIRCLE ± 1/16"
BOLT HOLES SHALL BE EQUALLY SPACED ± 1/64"
DIAMETERS A, B AND C TO BE CONCENTRIC ABOUT CENTERLINE ± 1/16"

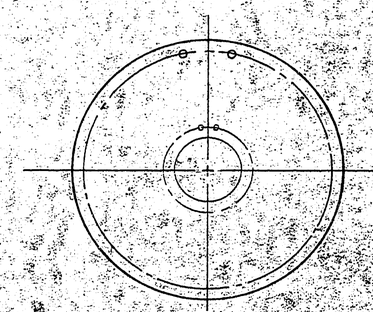

Ameron PIPE PRODUCTS GROUP

Russian River – Contract #2

SYMBOL	REVISION	DATE	BY	APPV'D

DRAWN: KW 3-3-76
CHECKED:
APPV'D:

AWWA CLASS [redacted] BLIND FLG.
2314 683.0

60-4-102.230.107

"D" BLIND

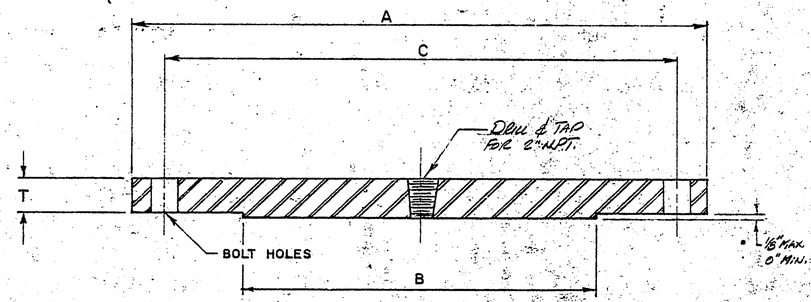

NOMINAL PIPE SIZE	MAT'L LIST NO	QUANTITY	RAISED FACE B	O.D. FLANGE A	NUMBER BOLT HOLES	BOLT CIRCLE C	DIAM. BOLT HOLES	FLANGE THICKNESS T
12			11	19	12	17	1	13/16
14			13	21	12	18 3/4	1 1/8	15/16
16			15	23 1/2	16	21 1/4	1 1/8	1
18	(60)		16	25	16	22 3/4	1 1/4	1 1/16
20			19	27 1/2	20	25	1 1/4	1 1/8
24			23	32	20	29 1/2	1 3/8	1 1/4
30			29	38 3/4	28	36	1 3/8	1 3/8
36			35	46	32	42 3/4	1 5/8	1 5/8
42			41	53	36	49 1/2	1 5/8	1 3/4
48			47	59 1/2	44	56	1 5/8	1 3/4

SPECIFICATIONS

STEEL:
ASTM A-283, Gr. B, C or D

FACING:
THE FLANGES SHALL BE FACED SMOOTH OR MAY HAVE A SERRATED FINISH OF APPROXIMATELY 32 SERRATIONS PER INCH, APPROXIMATELY 1/64" DEEP. SERRATIONS MAY BE SPIRAL OR CONCENTRIC. EDGES OF FACED SURFACES AND BOLT HOLES SHALL BE DEBURRED.

TOLERANCES:

RAISED FACE DIAMETER + 0" − 1/8"

OUTSIDE DIAMETER ± 1/8"

THICKNESS OF FLANGES + 1/8" − 0"

BOLT CIRCLE ± 1/16"

BOLT HOLES SHALL BE EQUALLY SPACED ± 1/64"

DIAMETERS A, B AND C TO BE CONCENTRIC ABOUT CENTERLINE ± 1/16"

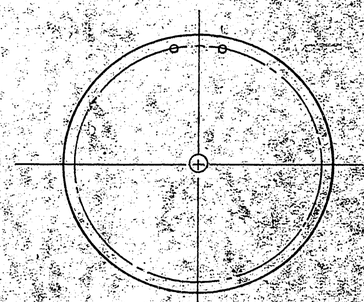

Ameron PIPE PRODUCTS GROUP

Russian River - Contract #2

SYMBOL	REVISION	DATE	BY	APPV'D

DRAWN: LW 3-3-76
CHECKED:
APPV'D:

AWWA CLASS "D" BLIND FLG.

2314 684.0

60-4-102.230.108

1000 1004 (8/70)

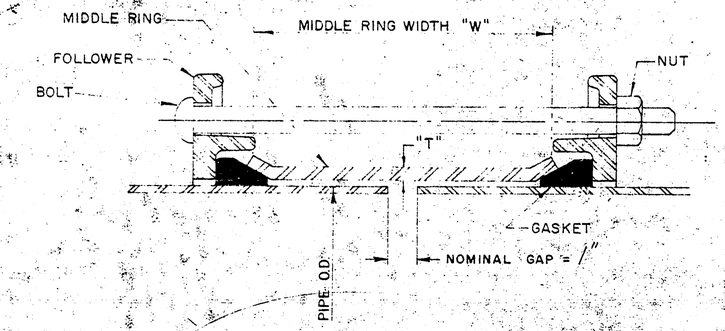

SPECIFICATIONS

1. COUPLINGS SHALL BE SMITH-BLAIR NO. 411, BAKER SERIES 200, DRESSER STYLE 38 OR EQUAL.
2. MATERIALS:
   - MIDDLE RING MANUFACTURES STD
   - FOLLOWERS " "
   - GASKET " "
   - BOLTS " "
   - NUTS " "
3. PAINT OR COATING:
   - MIDDLE RING OUTSIDE 8 MILS, INSIDE 16 MILS — COAL TAR EPOXY, BITUMASTIC 300-M OR AMERCOAT #78
   - FOLLOWERS 8 MILS " "
   - BOLTS CADMIUM PLATED ASTM A165
   - NUTS " "

FLEXIBLE COUPLINGS

PIECE NO.	SHEET NO.	MAT'L. LIST NO.	QUANTITY	PIPE O.D.	MIDDLE RING "W"	MIDDLE RING "T"
		613		12.78	5	1/4

Amron PIPE PRODUCTS GROUP

Russian River - Contract #2

SYM	REVISION	DATE	BY	APPV'D

DRAWN 12-24-76
CHECKED
APPV'D

60-4-102.230.109

ITEM NO.	QUANTITY REQ'D/VEH.	DESCRIPTION	MATERIAL
1	1	Pedestal Plate	

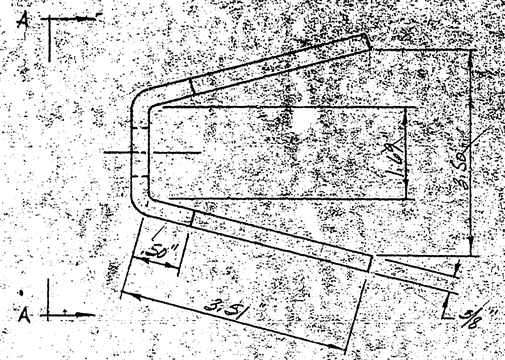

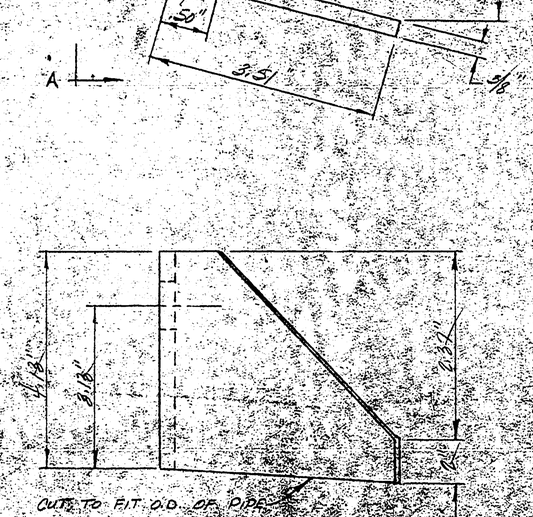

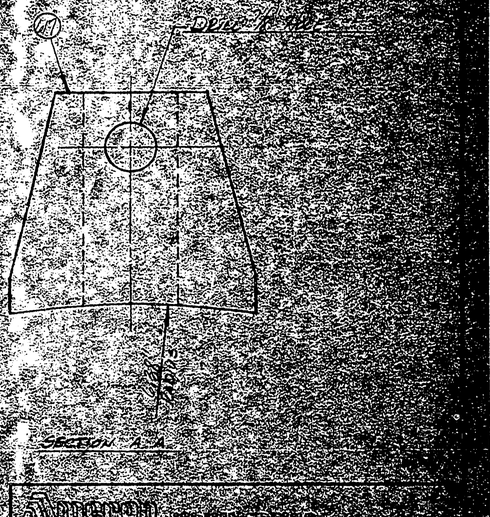

CHANGE ORDERS	SYMBOL	REVISION	DATE	BY	APPVD

UNLESS OTHERWISE SPECIFIED DIMENSIONS ARE IN INCHES
TOLERANCES
FRACT. ± X .XX .XXX ANGLE ±

DRAWN
CHECKED
APPVD.
DWG. SCALE

60-4-102.230.110

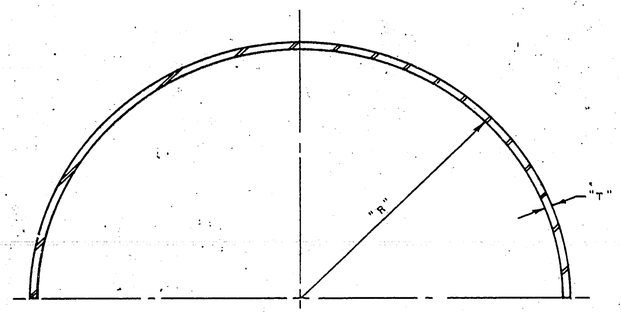

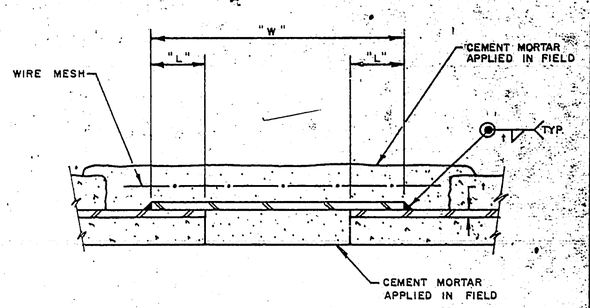

PIPE SIZE	MAT'L LIST NO.	QUANTITY HALF B.S.	"T"	"W"	"R"	CUT LENGTH	"L"
48	633		1/4	12	24.94"	78.74	2

SYMBOL	REVISION	DATE	BY	APPV'D.

DRAWN: KW 3-3-76
CHECKED:
APPV'D.:

Ameron PIPE PRODUCTS GROUP

RUSSIAN RIVER – CONTRACT #2

23/4 6B7.0

60-4-102.230.111

1000 1004 (8/70)

FLAG	ITEM NO.	QUANTITY PER DWG.	DESCRIPTION	MATERIAL SPECIFICATION
	327	—	49.875"O.D. x 10 GA. CYL.	

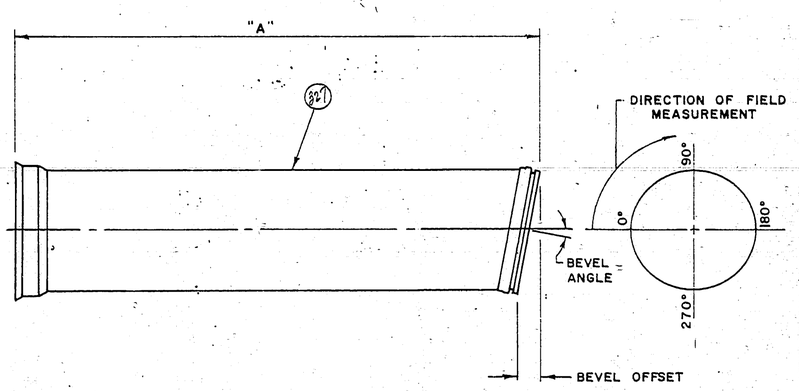

P.C. NO.	CUT SECT.	CLASS	"A"	BEVEL ANGLE	BEVEL OFFSET	F.T. LOCATION ANGULAR	F.T. LOCATION CIRCUM.	REF. SHT.
426	—	260	41'-3.25"	2°26'	2.12"	270°	—	—
429	—	260	41'-3.25"	2°48'	2.44"	90°	—	—
440	—	260	41'-3.25"	1°19'	1.15"	270°	—	—
508	—	260	23'-1.25"	3°24'	2.96"	90	—	3F13
511	—	260	41'-3.25"	4°12'	3.66"	90	—	—
513	—	260	41'-3.25"	2°52'	2.50'	90	—	—
518	—	260	41'-3.25"	2°18'	2.00"	270	—	—

CHANGE ORDERS	SYMBOL	REVISION	DATE	BY	APPV'D

UNLESS OTHERWISE SPECIFIED DIMENSIONS ARE IN INCHES
TOLERANCES
FRACT X .XX .XXX ANGLE
± ± ± °

DWG. SCALE

Ameron PIPE PRODUCTS GROUP

RUSSIAN RIVER - CONTRACT #2

DRAWN CLL 12/10/75

CHECKED

APP'D 2265

60-4-102.230.112

3F1-10

FLAG	ITEM NO.	QUANTITY THIS DWG.	DESCRIPTION	MATERIAL SPECIFICATION
	328	—	49.875" O.D. x 10 GA. CYL.	

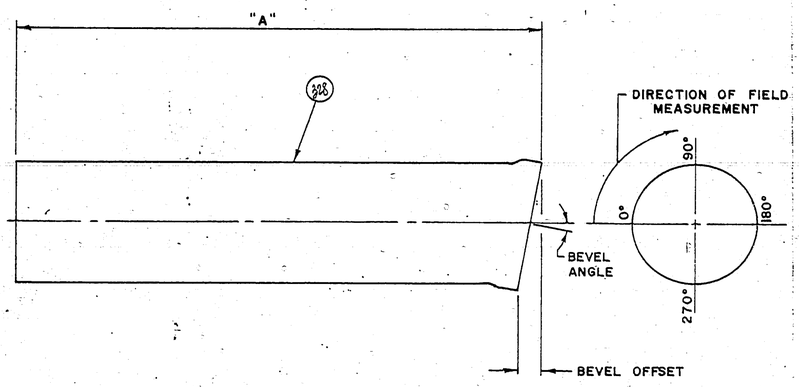

P.C. NO.	CUT SECT.	CLASS	"A"	BEVEL ANGLE	BEVEL OFFSET	F.T. LOCATION ANGULAR	F.T. LOCATION CIRCUM.	REF. SHT.
450	—	260	41'-2"	2°07'	1.84"	90°	—	3F7
452	—	260	41'-2"	2°25	2.10"	90°	—	—
454	—	260	41'-2"	4°17'	3.74"	270°	—	—
522	—	260	41'-2"	1°99'	1.15"	180	—	3F5
525	—	260	41'-2"	2°32'	1.77"	270	—	3F6A
530	—	260	41'-2"	2°53'	2.51"	270	—	—
541	—	260	41'-2"	2°28'	2.15"	270	—	3F6A
543	—	260	41'-2"	2°06'	1.83	90	—	—

CHANGE ORDERS	SYMBOL	REVISION	DATE	BY	APPV'D.

UNLESS OTHERWISE SPECIFIED DIMENSIONS ARE IN INCHES
TOLERANCES

FRACT	.X	XX	.XXX	ANGLE
±	±	±	±	±

DWG. SCALE

Ameron PIPE PRODUCTS GROUP

RUSSIAN RIVER - CONTRACT #2

DRAWN	CLL	2/10/75
CHECKED		
APPV'D		

60-4-102.230.113

2265 3F6.2

1000 1000 P 70

3F2A

ITEM NO.	QUANTITY REQ'D.	DESCRIPTION	MATERIAL SPECIFICATION
328	–	49.875" O.D. X 10GA. C4L	
334	5	1/4" PIPE PLUGS	
320	5	1/4" STEEL PIPE COUPLINGS.	

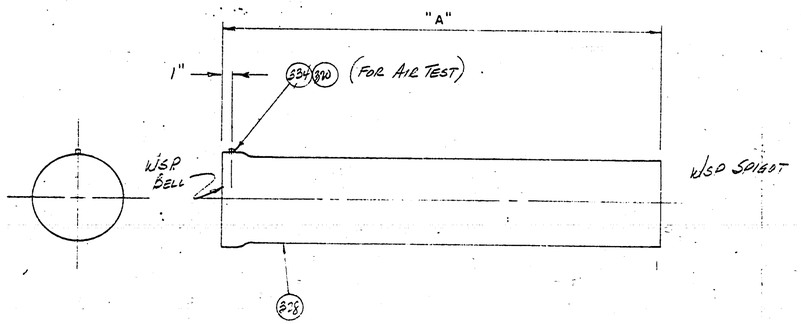

PC. NO.	CUT SECT.	CLASS	"A"			REF. LAYOUT SHT.
420	—	200	41'-2"			3L1
421	—					
422	—					
423	—					
424	—					

CHANGE ORDERS	SYMBOL	REVISION	DATE	BY	APP'D

DWG. SCALE

RUSSIAN RIVER - CONTRACT # 2

DESIGN KW 12-1-75 | 60-4-102.230.114

2265 3F2A.0

FLAG	ITEM NO.	QUANTITY THIS DWG	DESCRIPTION	MATERIAL SPECIFICATION
	327	18'-2"	49.875" O.D. x 10 GA. CYL	

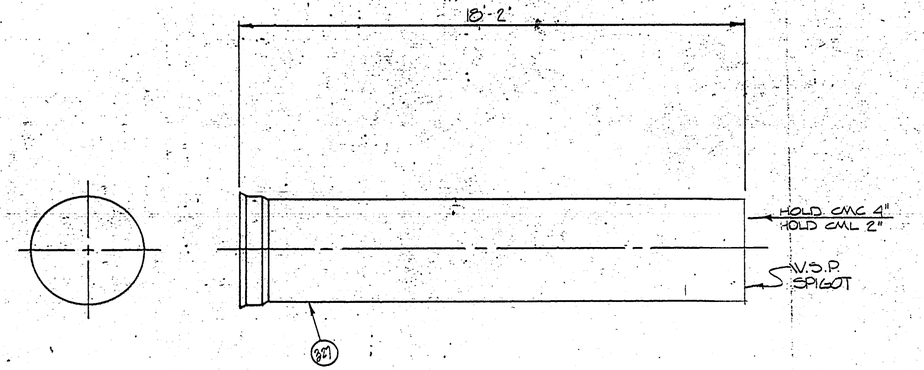

CLASS 260
CMC .75
CML .75
425
34
CUT SCH. 19

Ameron PIPE PRODUCTS GROUP

RUSSIAN RIVER - CONTRACT #2

CHANGE ORDERS	SYMBOL	REVISION	DATE	BY	APPV'D

UNLESS OTHERWISE SPECIFIED DIMENSIONS ARE IN INCHES

TOLERANCES

FRACT.	X	XX	XXX	ANGLE
±	±	±	±	±

DWG. SCALE

DRAWN	CLL	12/10/75
CHECKED		
APPV'D.		

60-4-102.230.115

2265

3F3500

1000 1000 (8/70)

1-CUT

354

FLAG	ITEM NO	QUANTITY THIS DWG	DESCRIPTION	MATERIAL SPECIFICATION
	327	41'3.25"	49.875" O.D. x 10 GA. CYL.	
	33	1	18"-X 12.50" OAL CL'D" SKIRTED FLG. SEE SHT. 3B2	
	325	1	30.25" O.D. x 3/16" R. COLLAR ROLLED TO A 24.94" RADIUS	

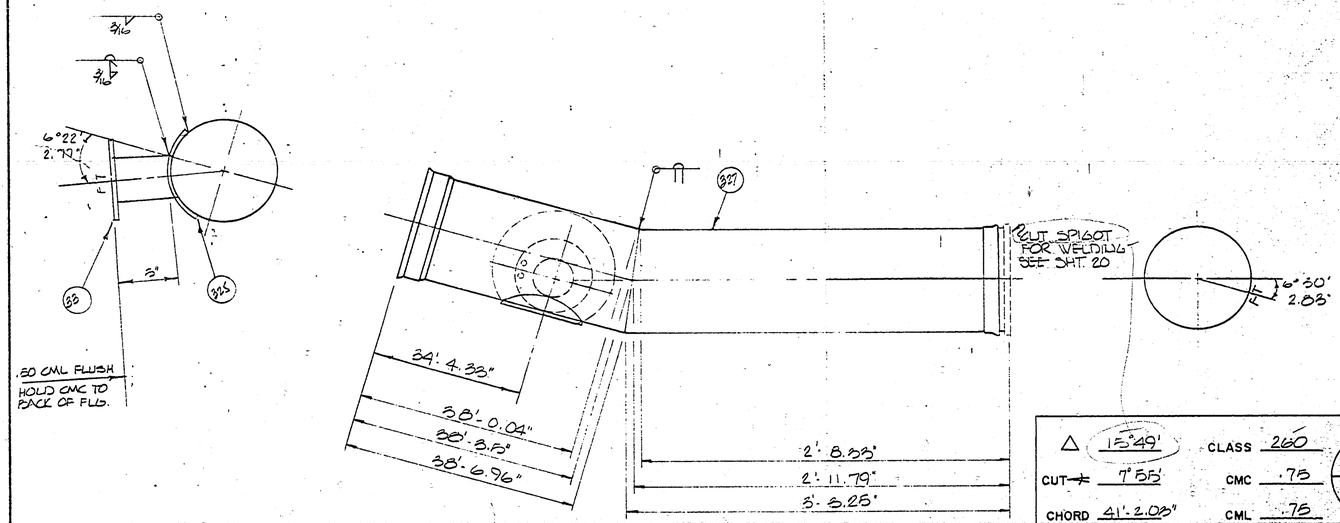

△ 15°49'
CUT 7°55'
CHORD 41'-2.03"

CLASS 260
CMC .75
CML .75

436
3L1

CHANGE ORDERS	SYMBOL	REVISION	DATE	BY	APPV'D

UNLESS OTHERWISE SPECIFIED DIMENSIONS ARE IN INCHES
TOLERANCES

FRACT	X	XX	XXX	ANGLE
±	±	±	±	±

DWG SCALE

Amercon PIPE PRODUCTS GROUP

RUSSIAN RIVER - CONTRACT #2

DRAWN CLL 12/10/76
CHECKED
APPV'D

60-4-102.230.116

2265

3E4.0

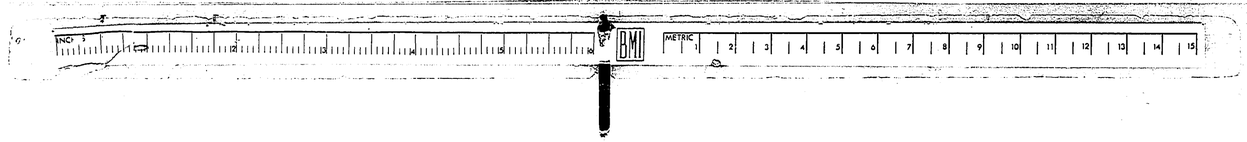

1-CUT

3FS

FLAG	ITEM NO	QUANTITY THIS DWG	DESCRIPTION	MATERIAL SPECIFICATION
	38	41'-2"	49.875" O.D. x 10 GA. CYL.	
	P2	1	48" M3816 SPIGOT	

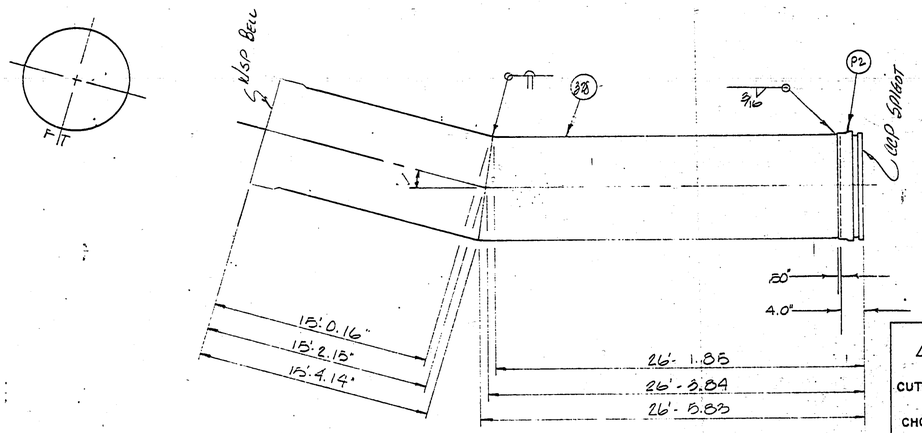

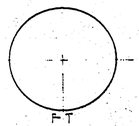

△ 9°07'
CUT ⏤ 4°34'
CHORD 41'-4.53"

CLASS 200
CMC .75
CML .75

446
342

CHANGE ORDERS	SYMBOL	REVISION	DATE	BY	APPV'D

UNLESS OTHERWISE SPECIFIED DIMENSIONS ARE IN INCHES
TOLERANCES

FRACT	X	XX	XXX	ANGL
±	±	±	±	±

DWG. SCALE

AMERON PIPE PRODUCTS GROUP

RUSSIAN RIVER - CONTRACT #2

DRAWN CLL 12/1975
CHECKED
APPV'D

60-4-102.230.117

2265

3FS.0

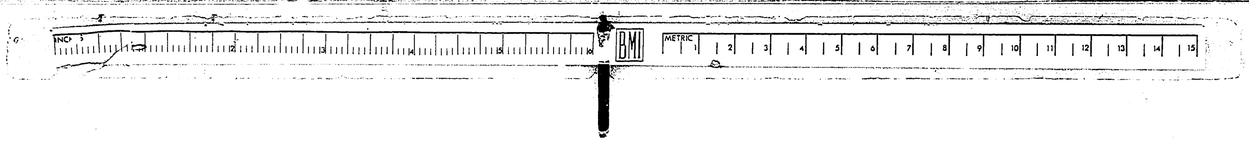

3F6

FLAG	ITEM NO.	QUANTITY THIS DWG.	DESCRIPTION	MATERIAL SPECIFICATION
	328	41'-2"	49.875" O.D. x 10 GA CYL.	

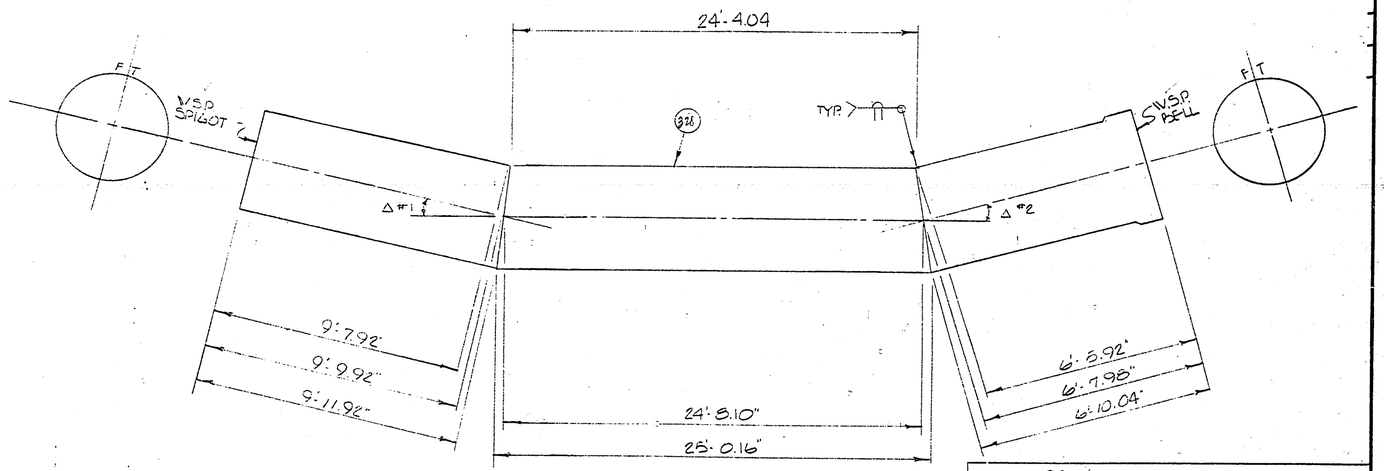

#1	9°10'	CMC	.75
CUT Δ	4°35'	CML	.75
#2	9°27'	CHORD	40'-11.19"
CUT Δ	4°44'		

448
3L2

Ameron PIPE PRODUCTS GROUP

RUSSIAN RIVER - CONTRACT #2

CHANGE ORDERS	SYMBOL	REVISION	DATE	BY	APPV'D.

UNLESS OTHERWISE SPECIFIED DIMENSIONS ARE IN INCHES

TOLERANCES

FRACT.	.X	.XX	.XXX	ANGLE
±	±	±	±	±

DWG. SCALE

DRAWN	CLL	12/10/75
CHECKED		
APPV'D.		

60-4-102.230.118

2265

3F6.0

1-CUT

3F7

328	41'-2"	49.875" O.D. X 10 GA.	
33	1	18" X 12.50" O.A.L. CL "D" SKIRTED FLG. SEE SHT. 3F2	
325	1	38.25" O.D. X 3/16" PL COLLAR ROLLED TO A 24.94" RADIUS	

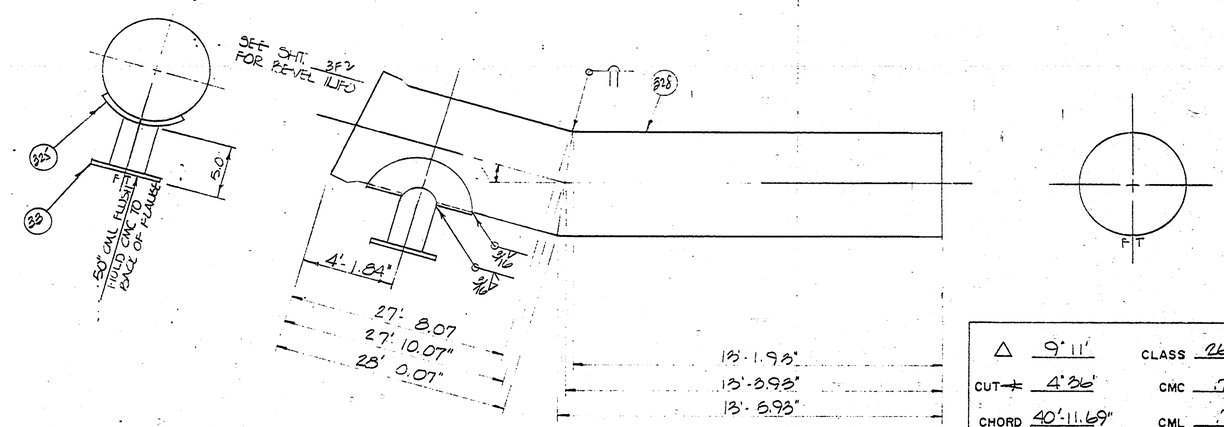

△	9°11'	CLASS	260
CUT ⊥	4°36'	CMC	.75
CHORD	40'-11.69"	CML	.75

450 / 3L2

Ameron PIPE PRODUCTS GROUP

RUSSIAN RIVER CONTRACT #2

DRAWN CLL 12/10/75

CHECKED

APPV'D

60-4-102.230.119

2265

3F7.0

UNLESS OTHERWISE SPECIFIED DIMENSIONS ARE IN INCHES
TOLERANCES
FRACT X XX XXX ANGLE

DWG SCALE

CHANGE ORDERS	SYMBOL	REVISION	DATE	BY	APPV'D

3F8

FLAG	ITEM NO	QUANTITY THIS DWG.	DESCRIPTION	MATERIAL SPECIFICATION
	328	41'-2"	49.875" O.D. x 10 GA. CYL.	
	32	1	6" - 150# SLIP-ON FLG.	
	322	10"	6" SCH. 40 STEEL PIPE	
	324	1	10" SQ. x 1/4" PL COLLAR ROLLED TO A 24.94" RADIUS	

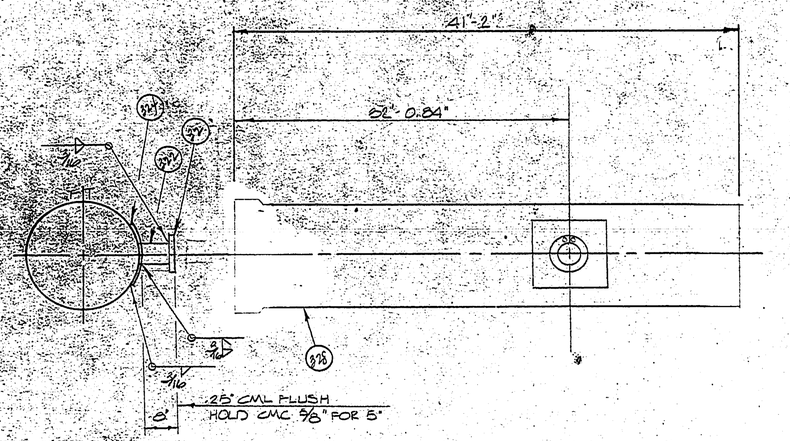

CLASS 260
CMC .75
CML .75
455
3L3

Ameron PIPE PRODUCTS GROUP

RUSSIAN RIVER - CONTRACT #2

CHANGE ORDERS	SYMBOL	REVISION	DATE	BY	APPV'D

UNLESS OTHERWISE SPECIFIED DIMENSIONS ARE IN INCHES

TOLERANCES

FRACT.	.X	.XX	.XXX	ANGLE
±	±	±	±	±

DWG. SCALE

DRAWN	CLL	12/10/75
CHECKED		
APPV'D		

60-4-102.230.120

2265

3F8.0

1000 1000 (8/70)

3F9

* CONTRACTOR TO VERIFY HEIGHT

FLAG	ITEM NO.	QUANTITY THIS DWG.	DESCRIPTION	MATERIAL SPECIFICATION
	322	11'	6" SCH. 40 STEEL PIPE ...OK	
	311	2	6"x90° STD WT ELBOW L.R.	
	310	4	6" TENSION LUGS SEE SHT. 33	
	32	1	6"x150# SLIP-ON FLG. F.F.	

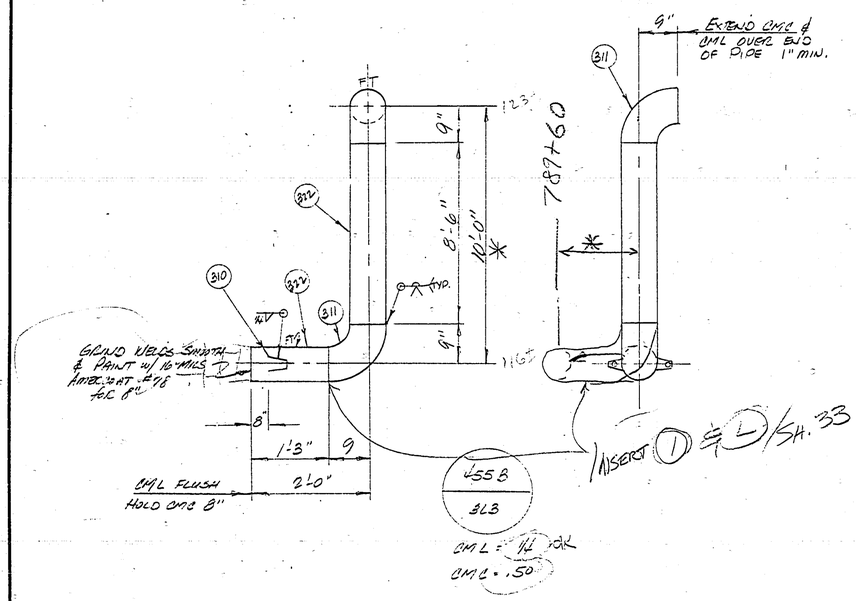

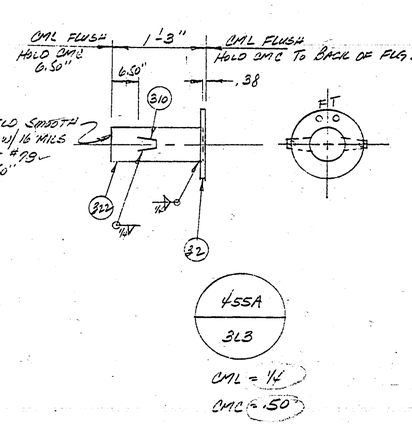

CHANGE ORDERS	SYMBOL	REVISION	DATE	BY	APPV'D.

UNLESS OTHERWISE SPECIFIED DIMENSIONS ARE IN INCHES
TOLERANCES

FRACT.	.X	.XX	.XXX	ANGLE
±	±	±	±	±

DWG. SCALE

Ameron PIPE PRODUCTS GROUP

RUSSIAN RIVER - CONTRACT #2

DRAWN	KH	12-11-75
CHECKED		
APPV'D.		

2205 3F9.0

60-4-102.230.121

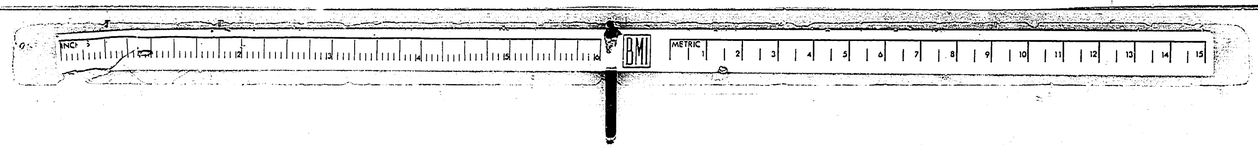

1-CUT

3P10

FLAG	ITEM NO.	QUANTITY THIS DWG.	DESCRIPTION	MATERIAL SPECIFICATION
	328	4'-2"	49.875"O.D.x 106A. C&L	

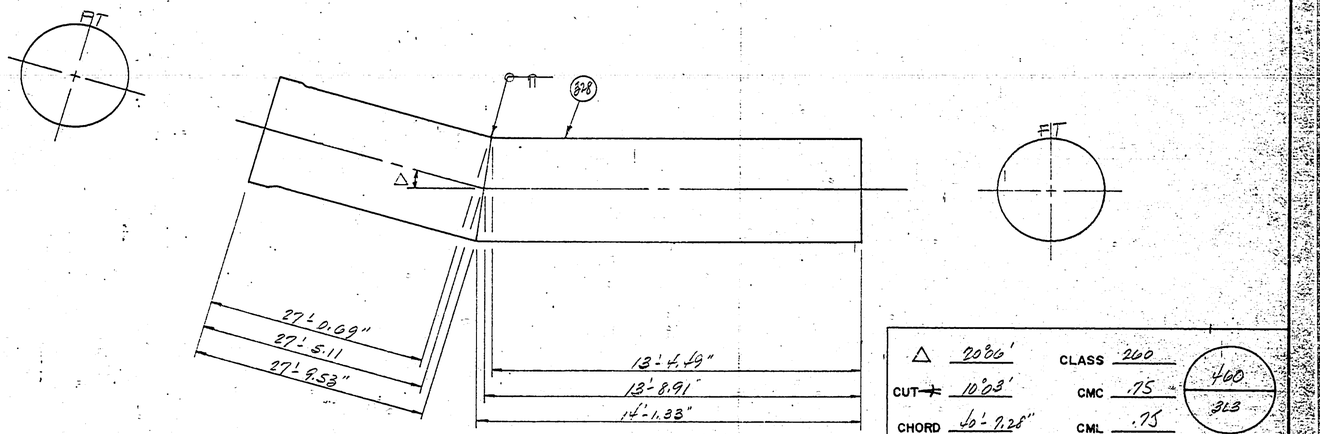

△	20°00'
CUT	10°08'
CHORD	40'-9.28"
CLASS	200
CMC	.75
CML	.75

460
363

Ameron PIPE PRODUCTS GROUP

RUSSIAN RIVER - CONTRACT #2

CHANGE ORDERS	SYMBOL	REVISION	DATE	BY	APPV'D

UNLESS OTHERWISE SPECIFIED DIMENSIONS ARE IN INCHES
TOLERANCES

FRACT	.X	XX	.XXX	ANGLE
±	±	±	±	±

DWG. SCALE

DRAWN	KW	12-11-75
CHECKED		
APPV'D.		

2205

60-4-102.230.122

3P10.0

1000 1000 (8/70)

1-CUT

3F11

FLAG	ITEM NO.	QUANTITY THIS DWG	DESCRIPTION	MATERIAL SPECIFICATION
	328	14'-9.48"	49.875"O.D. x 10GA. CYL.	
	33	1	18"CL."D" SKIETED FLG. SEE SHT. 3B2	
	325	1	38.25"O.D. x 9/16"PL. COLLAR ROLL TO 24.94"R.	
	P1	1	48" BELL RING	

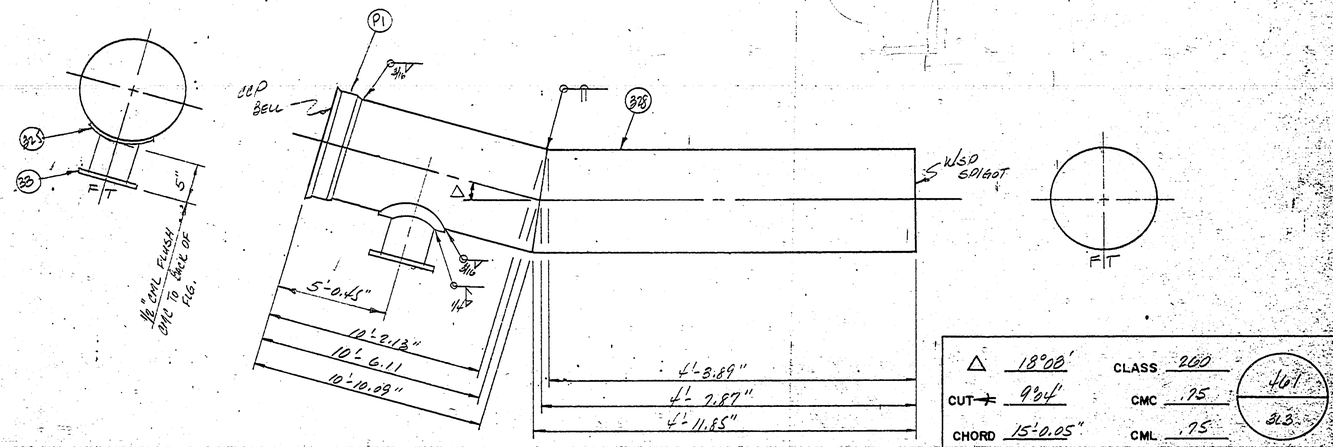

△	18°00'
CUT ⊣	9°04'
CHORD	15'-0.05"
CLASS	200
CMC	.75
CML	.75

460
36.3

AS #20

Ameron PIPE PRODUCTS GROUP

RUSSIAN RIVER - CONTRACT # 2

60-4-102.230.123

3F11.0

CHANGE ORDERS	SYMBOL	REVISION	DATE	BY	APPV'D.

UNLESS OTHERWISE SPECIFIED DIMENSIONS ARE IN INCHES
TOLERANCES
FRACT. ± .X ± .XX ± .XXX ± ANGLE ±

DWG. SCALE

DRAWN	JW	12-11-75	2205
CHECKED			
APPV'D.			

1500 1000 5 70

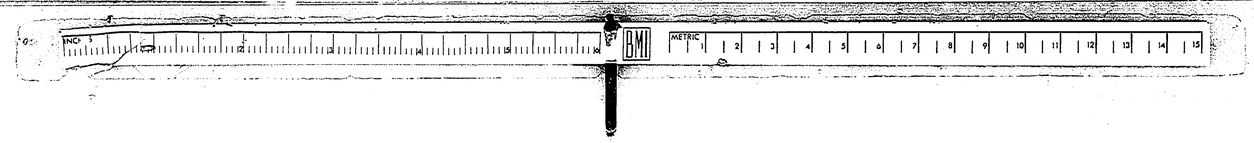

3F12

FLAG	ITEM NO.	QUANTITY THIS DWG.	DESCRIPTION	MATERIAL SPECIFICATION
	329	40'-3.25"	49.875 O.D. × 10GA CYL	

STANDARD SECTIONS w/ CUT SPIGOT (SEE SHT. 20)

Pc. No.	LAYOUT REF.	Pc. No.	LAYOUT REF.	Pc. No.	LAYOUT REF.
462	3L3				

CHANGE ORDERS	SYMBOL	REVISION	DATE	BY	APPV'D.

UNLESS OTHERWISE SPECIFIED DIMENSIONS ARE IN INCHES

TOLERANCES

FRACT.	.X	.XX	.XXX	ANGLE
±	±	±	±	±

DWG. SCALE

Ameron PIPE PRODUCTS GROUP

RUSSIAN RIVER - CONTRACT # 2

DRAWN

CHECKED

APPV'D.

2265

3F12.0

60-4-102.230.124

1000-1000 (8/70)

INCH 1 2 3 4 5 6 BMI METRIC 1 2 3 4 5 6 7 8 9 10 11 12 13 14 15

3F13

FLAG	ITEM NO.	QUANTITY THIS DWG.	DESCRIPTION	MATERIAL SPECIFICATION
	327	23'-1.25"	49.875" O.D. x 10GA. CYL.	
	P1	1	48" BELL RING	
	33	1	18" CL. "D" SKIRTED FLG. SEE SHT 3B2	
	325	1	38.25" O.D. x 3/16" R COLLAR ROLL TO 24.94" R	

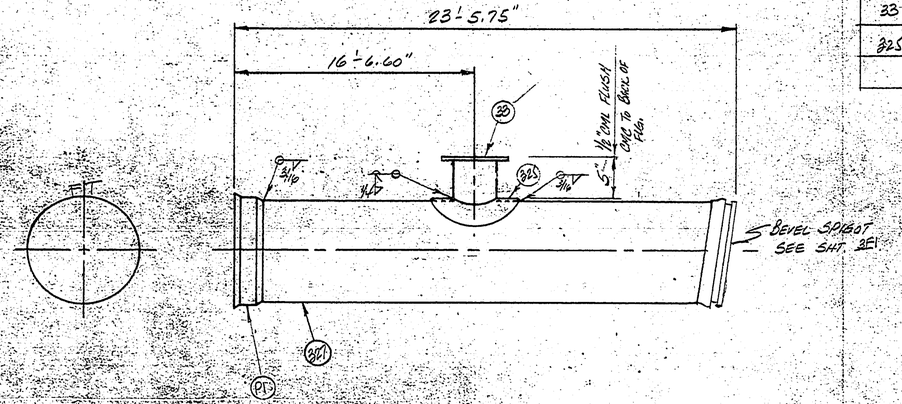

CLASS 260
CMC .75
CML .75

508
304

Ameron PIPE PRODUCTS GROUP

RUSSIAN RIVER CONTRACT #2

CHANGE ORDERS	SYMBOL	REVISION	DATE	BY	APPV'D

UNLESS OTHERWISE SPECIFIED DIMENSIONS ARE IN INCHES

TOLERANCES

FRACT.	X	XX	XXX	ANGLE
±	±	±	±	±

DWG. SCALE

DRAWN CW R-H-75
CHECKED
APPV'D

2265 3F13.0

60-4-102.230.125

7000-1000 (8/70)

3F14

FLAG	ITEM NO.	QUANTITY THIS DWG.	DESCRIPTION	MATERIAL SPECIFICATION
	328	41'-2"	49.875" O.D. x 10GA CYL.	
	P2	1	48" CCP SPIGOT	

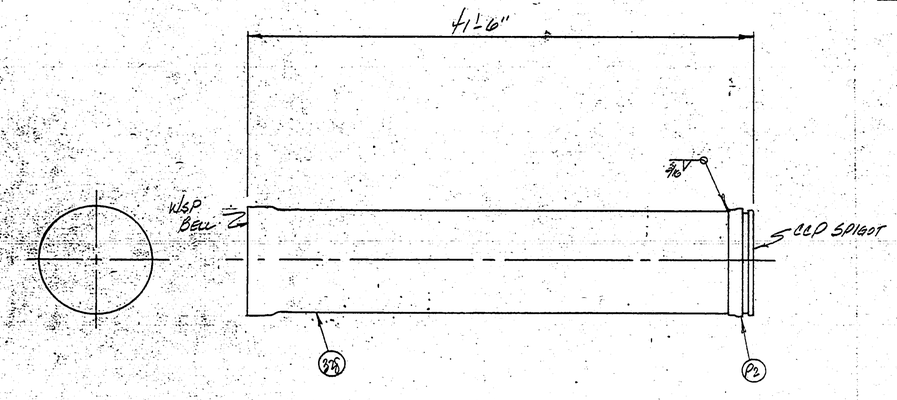

CLASS 260
CMC .75
CML .75

521
325

Ameron PIPE PRODUCTS GROUP

RUSSIAN RIVER - CONTRACT #2

CHANGE ORDERS	SYMBOL	REVISION	DATE	BY	APPV'D.

UNLESS OTHERWISE SPECIFIED DIMENSIONS ARE IN INCHES

TOLERANCES

FRACT.	.X	.XX	.XXX	ANGLE
±	±	±	±	±

DWG. SCALE

DRAWN	KW	12-10-75
CHECKED		
APPV'D.		

2265 3F14.0

60-4-102.230.126

1000 1000 (8/70)

1-CUT

3F15

FLAG	ITEM NO	QUANTITY THIS DWG	DESCRIPTION	MATERIAL SPECIFICATION
	328	41'-2"	49.875" O.D. x 10 GA. CYL.	

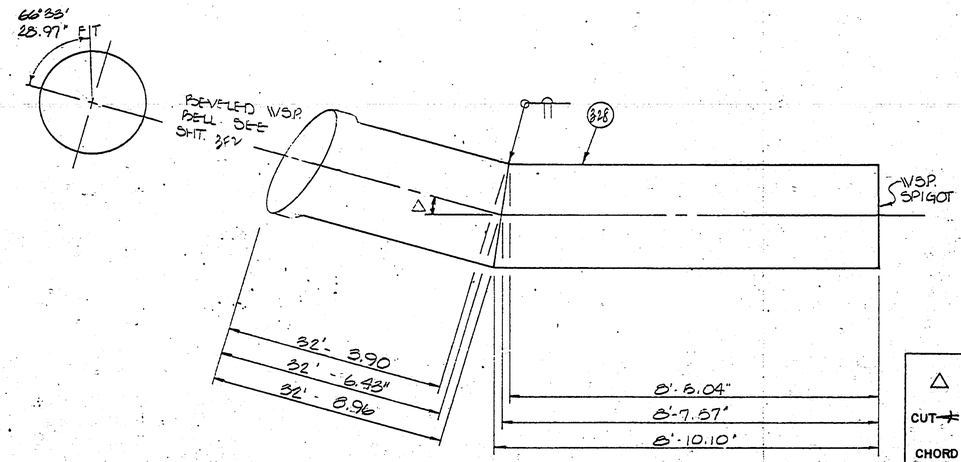

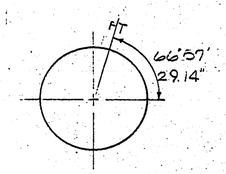

△	11°35'
CUT	5'47'
CHORD	41'-0.33"
CLASS	200
CMC	.75
CML	.75

322
3L5

Ameron PIPE PRODUCTS GROUP

RUSSIAN RIVER - CONTRACT #2

CHANGE ORDERS	SYMBOL	REVISION	DATE	BY	APPV'D.

UNLESS OTHERWISE SPECIFIED DIMENSIONS ARE IN INCHES

TOLERANCES

FRACT.	.X	.XX	.XXX	ANGLE
±	±	±	±	±

DRAWN	CLL	12/1/75
CHECKED		
APPV'D.		

DWG. SCALE 1"

2268

3F15.0

60-4-102.230.127

1000 1000 (8 70)

:-CUT

3P16

FLAG	ITEM NO	QUANTITY THIS DWG	DESCRIPTION	MATERIAL SPECIFICATION
	328	41'-2"	49.875" O.D X 10 GA. CYL.	

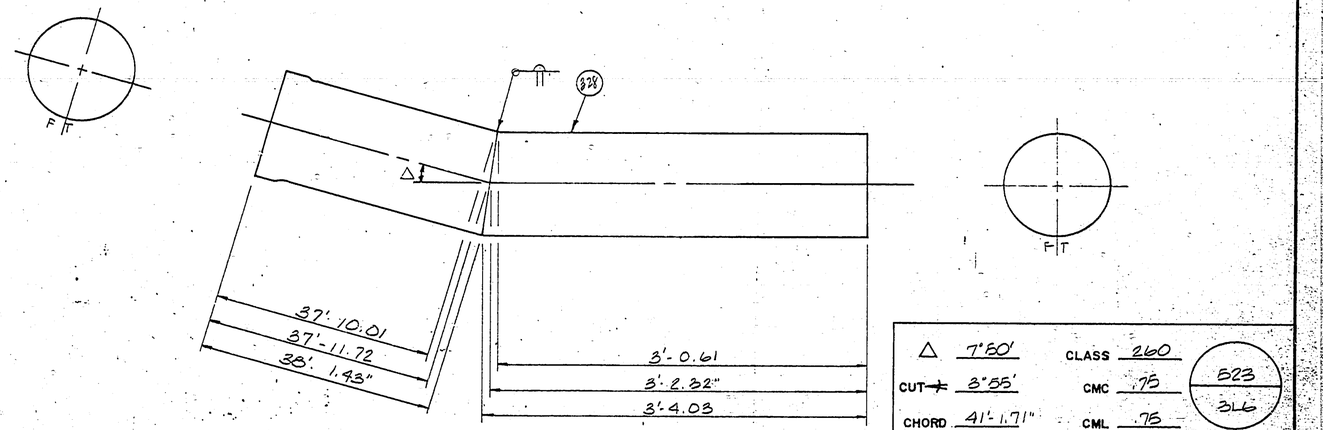

△ 7°50'
CUT ⊣ 3°55'
CHORD 41'-1.71"

CLASS 260
CMC .75
CML .75

523
316

Ameron PIPE PRODUCTS GROUP

RUSSIAN RIVER - CONTRACT #2

CHANGE ORDERS	SYMBOL	REVISION	DATE	BY	APPV'D.

UNLESS OTHERWISE SPECIFIED DIMENSIONS ARE IN INCHES
TOLERANCES

FRACT.	.X	.XX	.XXX	ANGLE
±	±	±	±	±

DWG. SCALE

DRAWN	CLL	12/11/75
CHECKED		
APPV'D.		

2265

3P16.0

60-4-102.230.128

1000 1000 .8 70

3F16A

ITEM NO.	QUANTITY REQ'D	DESCRIPTION	MATERIAL SPECIFICATION
328	—	49.875" O.D. x 10GA. CYL.	
335	3	2" x 3000# THREADOLET	
336	3	3/16" R x 6" SQ COLLAR ROLL TO 24.94" R.	ASTM A283-GRC

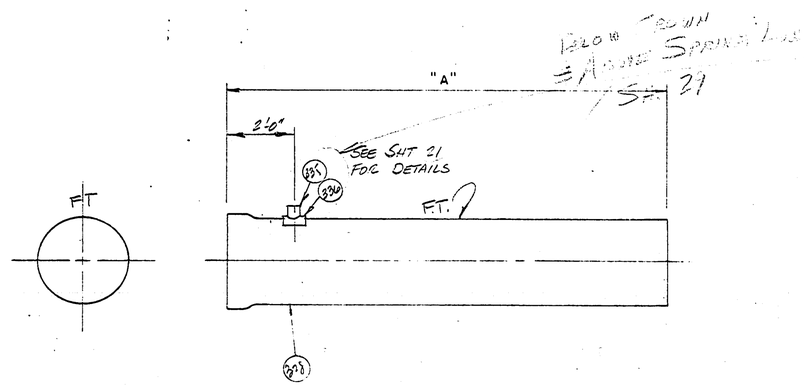

PC. NO.	CUT SECT.	CLASS	"A"		LAYOUT REF	FITTING REF. SHT.
525	—	260	41'-2"		3L6	3F2
533	—	260	41'-2"		3L6	—
541	—	260	41'-2"		3L6	3F2

CHANGE ORDERS	SYMBOL	REVISION	DATE	BY	APPV'D	DWG SCALE

RUSSIAN RIVER - CONTRACT #2

DRAWN KW 12-12-75

APPV'D 2265 3F16A.0

60-4-102.230.129

I-CUT

3F17

FLAG	ITEM NO.	QUANTITY THIS DWG.	DESCRIPTION	MATERIAL SPECIFICATION
	328	41'-2"	49.875" O.D. x 10 GA. CYL.	

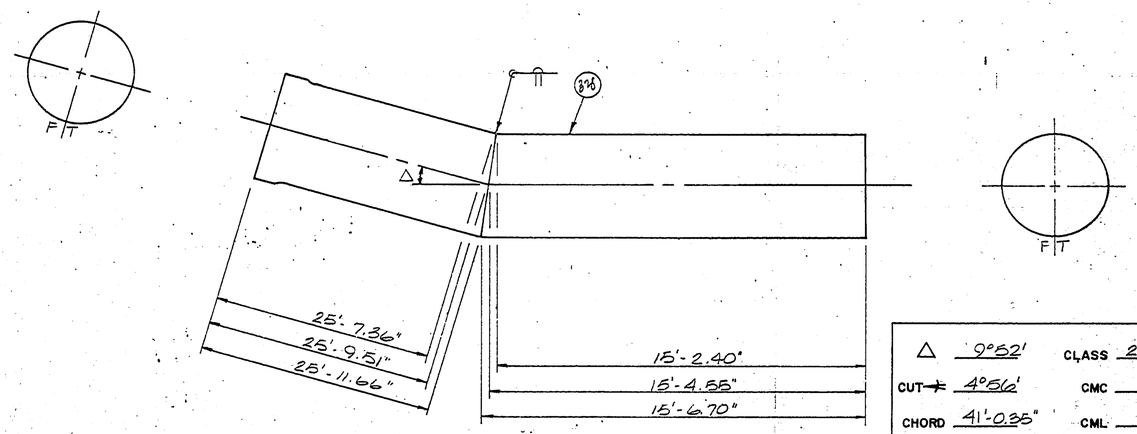

Δ	9°52'	CLASS	260
CUT ⊣	4°56'	CMC	.75
CHORD	41'-0.35"	CML	.75

545
3L7

Ameron PIPE PRODUCTS GROUP

RUSSIAN RIVER - CONTRACT #2

CHANGE ORDERS	SYMBOL	REVISION	DATE	BY	APPV'D.

UNLESS OTHERWISE SPECIFIED DIMENSIONS ARE IN INCHES

TOLERANCES

FRACT.	.X	XX	.XXX	ANGLE
±	±	±	±	±

DWG. SCALE

DRAWN	CLL	12/11/75
CHECKED		
APPV'D.		

226F

3F17.0

60-4-102.230.130

1000-1000 (8/70)

3F18

FLAG	ITEM NO	QUANTITY THIS DWG	DESCRIPTION	MATERIAL SPECIFICATION
	328	20'-4.52"	49.875" O.D. x 10GA. C/L	

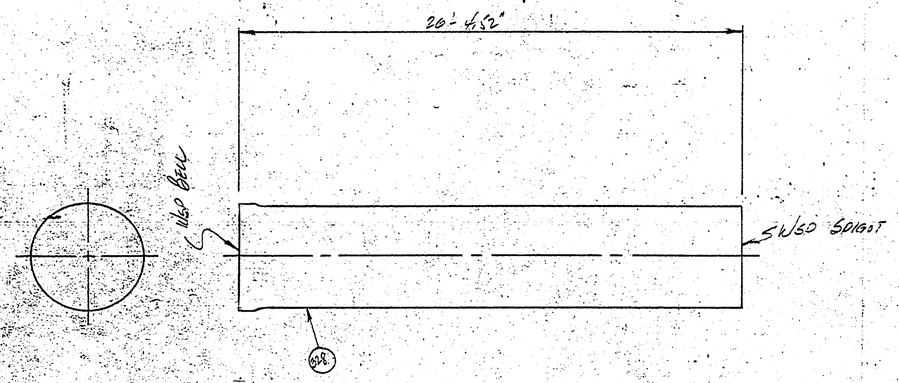

CLASS 260
CMC .75
CML .75
CS # 20

547
327

Ameron PIPE PRODUCTS GROUP

RUSSIAN RIVER - CONTRACT # 2

CHANGE ORDERS	SYMBOL	REVISION	DATE	BY	APPV'D.

UNLESS OTHERWISE SPECIFIED DIMENSIONS ARE IN INCHES
TOLERANCES
FRACT ± | .X ± | .XX ± | .XXX ± | ANGLE ±

DWG. SCALE

DRAWN WD 12-11-73
CHECKED
APPV'D.

2205

3P18:0

60-4-102.230.131

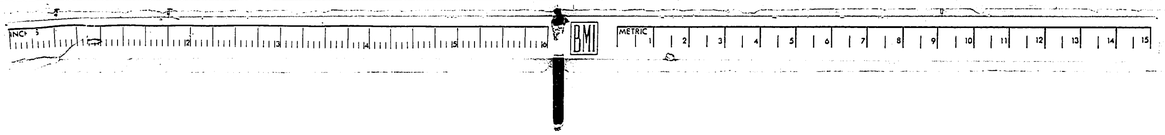

3F19

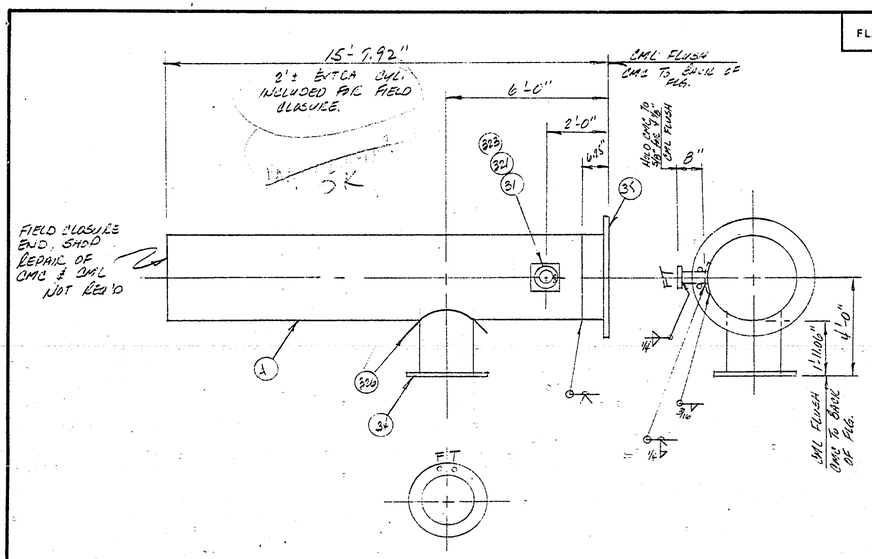

FLAG	ITEM NO.	QUANTITY THIS DWG.	DESCRIPTION	MATERIAL SPECIFICATION
	1	15'-1.67	46.875" O.D. x 1/4" W CML.	ASTM A570 GR C
	35	1	48" CL. "D" SLIPTED 5° FLG. SEE SHT 3B2	
	34	1	36" CL. "D" SLIPTED 5° FLG. SEE SHT 3B2	
	326	1	36" CLOTH PLATE SEE SHT 3B2	
	31	1	4" x 150# SLIP-ON FLG. F.F.	
	321	9"	4" STD WT STEEL PIPE	
	323	1	8" SQ x 1/2" W COLLAR (ALL TO 24.44" R.	

548
3L7

CML = .75, .25 FOR 4'-0L.
CMC = .75
CS # 13

CHANGE ORDERS	SYMBOL	REVISION	DATE	BY	APPV'D.

UNLESS OTHERWISE SPECIFIED DIMENSIONS ARE IN INCHES
TOLERANCES
FRACT. ± | .X ± | .XX ± | .XXX ± | ANGLE ±

DWG. SCALE

Ameron PIPE PRODUCTS GROUP

RUSSIAN RIVER - CONTRACT #2

DRAWN	EW	12-11-75
CHECKED		
APPV'D.		

2265 3F19.0

60-4-102.230.132

3F20

FLAG	ITEM NO.	QUANTITY THIS DWG.	DESCRIPTION	MATERIAL SPECIFICATION
	38	1	48" CLOSED BLIND FLG. SEE SHT. 3B4	

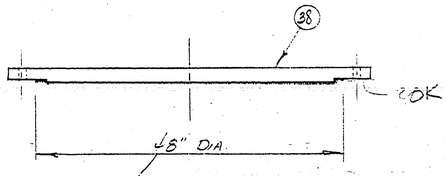

PAINT W/ 2 COATS (16 MILS) COAL TAR EPOXY AMERCOAT #78 KOPPERS BITUMASTIC 300-M EQUAL

5ABA
3L7

CHANGE ORDERS	SYMBOL	REVISION	DATE	BY	APPV'D.

UNLESS OTHERWISE SPECIFIED DIMENSIONS ARE IN INCHES
TOLERANCES

FRACT.	.X	.XX	.XXX	ANGLE
±	±	±	±	±

DWG. SCALE

Ameron PIPE PRODUCTS GROUP

RUSSIAN RIVER - CONTRACT #2

DRAWN	EW	12-11-73
CHECKED		
APPV'D.		

2265 3F20.0

60-4-102.230.133

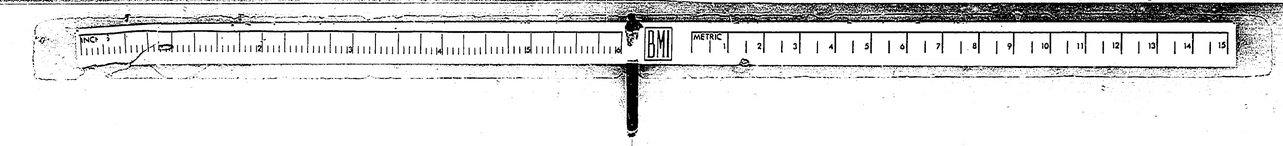

3F21

FLAG	ITEM NO.	QUANTITY THIS DWG.	DESCRIPTION	MATERIAL SPECIFICATION
	36	2	18" BLIND FLG. CL. "D" SEE SHT. 3B3	

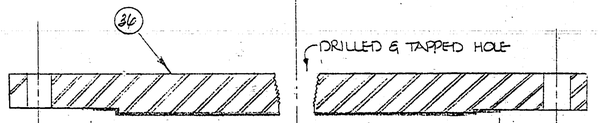

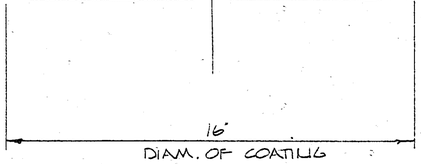

NOTE: COAT INSIDE BLIND FLG. AS SHOWN W/ 2 COATS (16 MILS) COAL TAR EPOXY - AMERCOAT #78

PC. NO.	REF. SHT.
436 A	3L1
450 A	3L2

CHANGE ORDERS	SYMBOL	REVISION	DATE	BY	APPV'D.

UNLESS OTHERWISE SPECIFIED DIMENSIONS ARE IN INCHES

TOLERANCES

FRACT.	.X	.XX	.XXX	ANGLE
±	±	±	±	±

DWG. SCALE

Ameron PIPE PRODUCTS GROUP

RUSSIAN RIVER - CONTRACT #2

DRAWN	CLL	12/11/78
CHECKED		
APPV'D.		

2265

3F21.0

60-4-102.230.134

1000-1000 (8-70)

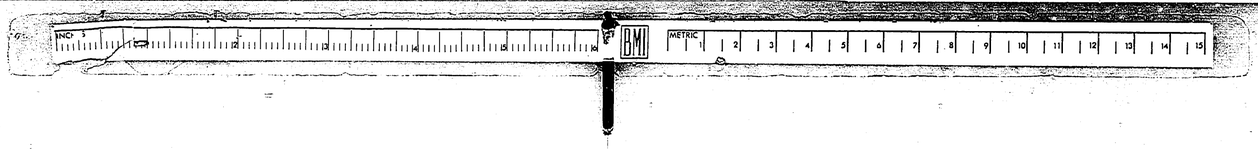

3F22

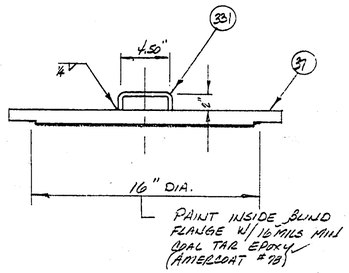

PAINT INSIDE BLIND FLANGE W/ 16 MILS MIN COAL TAR EPOXY (AMERCOAT #78)

FLAG	ITEM NO.	QUANTITY THIS DWG.	DESCRIPTION	MATERIAL SPECIFICATION
	37	1	18" ~~CL-D~~ BLIND FLG. SEE SHT 3B4	
	331	18"	1/2 ϕ ROD HANDLES	

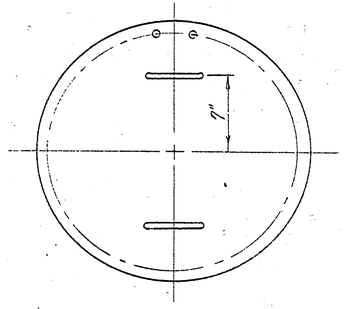

Pc. No.	LAYOUT SHT.
461A	3L3
	1

CHANGE ORDERS	SYMBOL	REVISION	DATE	BY	APPV'D.

UNLESS OTHERWISE SPECIFIED DIMENSIONS ARE IN INCHES

TOLERANCES

FRACT.	.X	.XX	.XXX	ANGLE
±	±	±	±	±

DWG. SCALE

Ameron PIPE PRODUCTS GROUP

RUSSIAN RIVER – CONTRACT #2

DRAWN	JW	12-10-75
CHECKED		
APPV'D.		

2265 3F22.0

60-4-102.230.135

1000 1000 8 70

3F23

FLAG	ITEM NO.	QUANTITY THIS DWG.	DESCRIPTION	MATERIAL SPECIFICATION
	37	1	18"CC"D" BLIND FLG. SEE SHT 384	
	31	1	4"x150# SLIP-ON FLG. F.F.	
	321	6"	4" STD WT. STEEL PIPE	

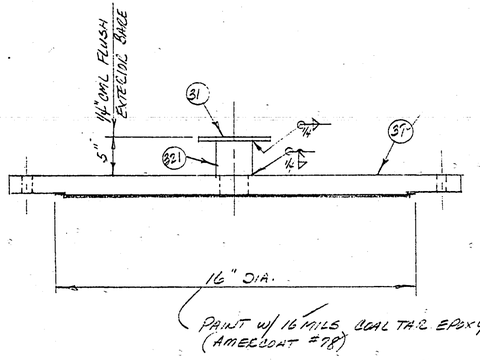

Pc. No.	LAYOUT REF.
508A1	3L4

CHANGE ORDERS	SYMBOL	REVISION	DATE	BY	APPV'D.

UNLESS OTHERWISE SPECIFIED DIMENSIONS ARE IN INCHES
TOLERANCES

FRACT.	.X	.XX	.XXX	ANGLE
±	±	±	±	±

DWG. SCALE

Ameron PIPE PRODUCTS GROUP

RUSSIAN RIVER - CONTRACT # 2

DRAWN	KW	12-4-75
CHECKED		
APPV'D.		

2265 3F23.0

60-4-102.230.136

381

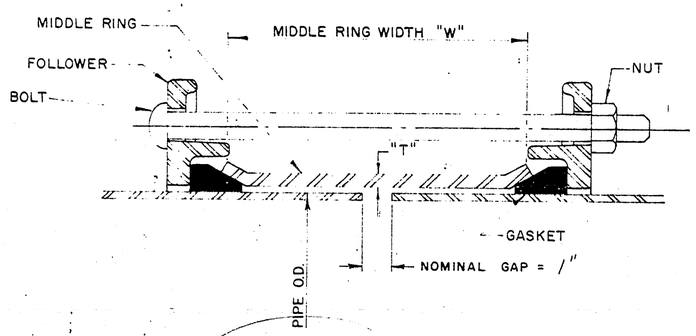

FLEXIBLE COUPLINGS

PIECE NO.	SHEET NO.	MAT'L. LIST NO.	QUANTITY	PIPE O.D.	MIDDLE RING "W"	MIDDLE RING "T"
		39	1	6.657	5"	1/4

SPECIFICATIONS

1. COUPLINGS SHALL BE SMITH-BLAIR NO. 411, BAKER SERIES 200, DRESSER STYLE 38 OR EQUAL. ~~9/5~~ OK
2. MATERIALS:
   - MIDDLE RING MANUFACTURES STD
   - FOLLOWERS " "
   - GASKET " "
   - BOLTS " "
   - NUTS " "
3. PAINT OR COATING:
   - MIDDLE RING OK OUTSIDE 8 MILS INSIDE 16 MILS COAL TAR EPOXY, BITUMASTIC 300-TH OR AMERCOAT #78
   - FOLLOWERS 8 MILS "
   - BOLTS CADMIUM PLATED ASTM A165
   - NUTS " " "

Ameron PIPE PRODUCTS GROUP

RUSSIAN RIVER - CONTRACT #2

SYMBOL	REVISION	DATE	BY	APPV'D.			
					DRAWN	KW	12-11-75
					CHECKED		
					APPV'D		

2265 381.0

60-4-102.230.137

"D" SKIRTED

382

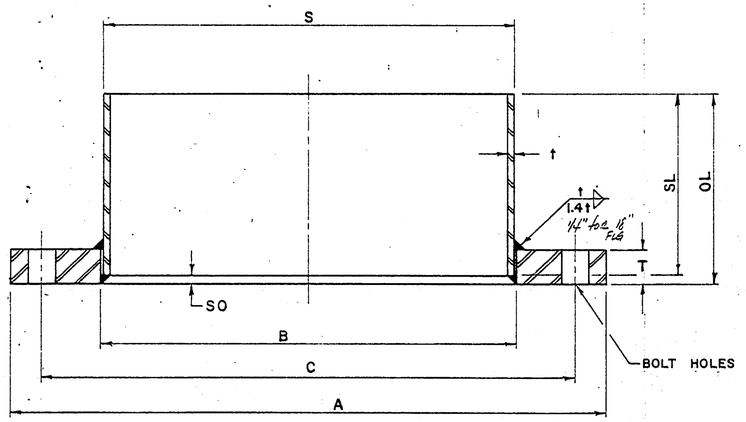

NOMINAL PIPE SIZE	MAT'L LIST NO	QUANTITY	OVERALL LENGTH OL	SKIRT LENGTH SL	SKIRT THICKNESS t	SKIRT OFFSET SO	SKIRT O.D. S	I.D. FLANGE B	O.D. FLANGE A	NUMBER BOLT HOLES	BOLT CIRCLE C	DIAM. BOLT HOLES	FLANGE THICKNESS T
24									32	20	29 1/2	1 3/8	1 1/4
30									38 3/4	28	36	1 3/8	1 3/8
36	34	1	36.25	36.00	1/4	1/4	37.875	37.94	46	32	42 3/4	1 5/8	1 5/8
42									53	36	49 1/2	1 5/8	1 3/4
48	35	1	6.25	6.00	1/4	1/4	49.875	49.94	59 1/2	44	56	1 5/8	1 3/4
54									66 1/4	44	62 3/4	1 7/8	2 1/8
60									73	52	69 1/4	1 7/8	2 1/4
18	33		12.50	12.00	.50	.50	18.00	18.06	25	16	22 3/4	1 1/4	1 1/16

SPECIFICATIONS

STEEL:

FLANGE - ASTM A-283, Gr. B, C or D
SKIRT - ASTM A-283, Gr. C or D
ASTM A-570, Gr. C

FACING:

FINAL MACHINING OF THE FLANGES SHALL BE DONE ONLY AFTER ALL WELDING TO THE PIPE SKIRT IS COMPLETED. FLANGES SHALL BE FACED NORMAL TO THE LONGITUDINAL AXIS OF THE PIPE. THE FLANGES SHALL BE FACED SMOOTH OR MAY HAVE A SERRATED FINISH OF APPROXIMATELY 32 SERRATIONS PER INCH, APPROXIMATELY 1/64" DEEP. SERRATIONS MAY BE SPIRAL OR CONCENTRIC. EDGES OF FACED SURFACES AND BOLT HOLES SHALL BE DEBURRED.

TOLERANCES:

INSIDE DIAMETER + 1/16" - 0"

OUTSIDE DIAMETER ± 1/8"

THICKNESS OF FLANGES + 1/8" - 0"

BOLT CIRCLE ± 1/16"

OUTSIDE DIAMETER SKIRT ± 0.080" MEASURED AT ANY POINT

BOLT HOLES SHALL BE EQUALLY SPACED ± 1/64

DIAMETERS A, B AND C TO BE CONCENTRIC ABOUT CENTERLINE ± 1/16"

SKIRT CLOSING SEAMS SHALL BE FULL PENETRATION BUTTWELD WITH 1/16" MAX. CROWN

SYMBOL	REVISION	DATE	BY	APP'D
	1			

AMERON PIPE PRODUCTS GROUP

Russian River - Contract #2 150psi

DRAWN	JW	12-4-75	AWWA CLASS "D" SKIRTED FLG.
CHECKED			
APP'D			226.6 382.0

60-4-102.230.138

"D" BLIND

383

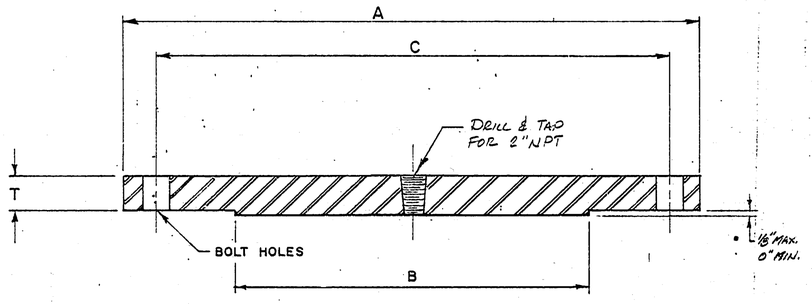

NOMINAL PIPE SIZE	MAT'L LIST NO	QUANTITY	RAISED FACE B	O.D. FLANGE A	NUMBER BOLT HOLES	BOLT CIRCLE C	DIAM. BOLT HOLES	FLANGE THICKNESS T
12			11	19	12	17	1	13/16
14			13	21	12	18 3/4	1 1/8	15/16
16			15	23 1/2	16	21 1/4	1 1/8	1
18 ✓	(30) ✓		15	25	16	22 3/4	1 1/4	1 1/16
20			19	27 1/2	20	25	1 1/4	1 1/8
24			23	32	20	29 1/2	1 3/8	1 1/4
30			29	38 3/4	28	36	1 3/8	1 3/8
36			35	46	32	42 3/4	1 5/8	1 5/8
42			41	53	36	49 1/2	1 5/8	1 3/4
48			47	59 1/2	44	56	1 5/8	1 3/4

SPECIFICATIONS

STEEL:
ASTM A-283, Gr. B, C or D

FACING:
THE FLANGES SHALL BE FACED SMOOTH OR MAY HAVE A SERRATED FINISH OF APPROXIMATELY 32 SERRATIONS PER INCH, APPROXIMATELY 1/64" DEEP. SERRATIONS MAY BE SPIRAL OR CONCENTRIC. EDGES OF FACED SURFACES AND BOLT HOLES SHALL BE DEBURRED.

TOLERANCES:

RAISED FACE DIAMETER + 0" − 1/8"

OUTSIDE DIAMETER ± 1/8"

THICKNESS OF FLANGES + 1/8" − 0"

BOLT CIRCLE ± 1/16"

BOLT HOLES SHALL BE EQUALLY SPACED ± 1/64"

DIAMETERS A, B AND C TO BE CONCENTRIC ABOUT CENTERLINE ± 1/16"

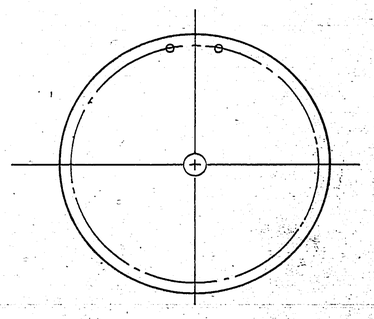

Ameron PIPE PRODUCTS GROUP

RUSSIAN RIVER – CONTRACT #2

SYMBOL	REVISION	DATE	BY	APPV'D.

DRAWN LW 12-11-75

CHECKED

APPV'D.

AWWA CLASS "D" BLIND FLG.

2265 BB3.0

60-4-102.230.139

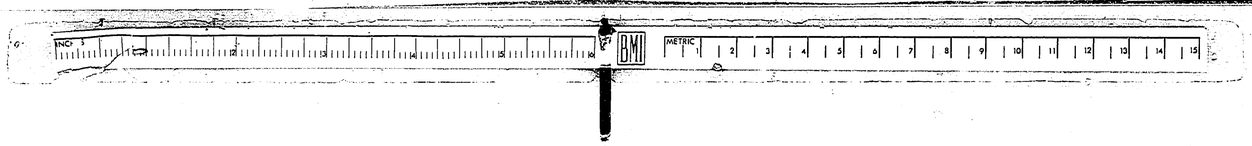

"D" BLIND

384

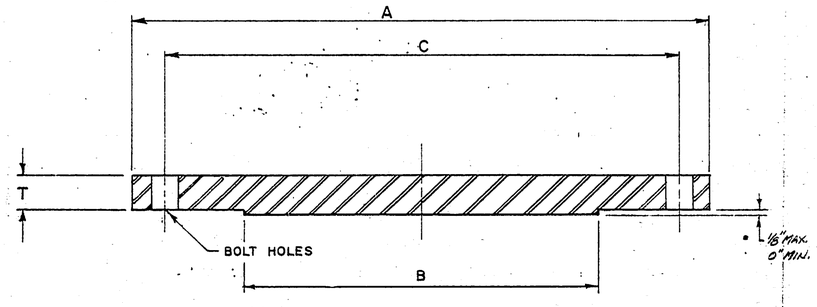

NOMINAL PIPE SIZE	MAT'L LIST. NO.	QUANTITY	RAISED FACE B	O.D. FLANGE A	NUMBER BOLT HOLES	BOLT CIRCLE C	DIAM. BOLT HOLES	FLANGE THICKNESS T
12			11	19	12	17	1	13/16
14			13	21	12	18 3/4	1 1/8	15/16
16			15	23 1/2	16	21 1/4	1 1/8	1
18	(37) ✓		15	25	16	22 3/4	1 1/4	1 1/16
20			19	27 1/2	20	25	1 1/4	1 1/8
24			23	32	20	29 1/2	1 3/8	1 1/4
30			29	38 3/4	28	36	1 3/8	1 3/8
36			35	46	32	42 3/4	1 5/8	1 5/8
42			41	53	36	49 1/2	1 5/8	1 3/4
48	(38)		47	59 1/2	44	56	1 5/8	1 3/4

SPECIFICATIONS

STEEL:
ASTM A-283, Gr. B, C or D

FACING:
THE FLANGES SHALL BE FACED SMOOTH OR MAY HAVE A SERRATED FINISH OF APPROXIMATELY 32 SERRATIONS PER INCH, APPROXIMATELY 1/64" DEEP. SERRATIONS MAY BE SPIRAL OR CONCENTRIC. EDGES OF FACED SURFACES AND BOLT HOLES SHALL BE DEBURRED.

TOLERANCES:

RAISED FACE DIAMETER +0" − 1/8"

OUTSIDE DIAMETER ± 1/8"

THICKNESS OF FLANGES + 1/8" −0"

BOLT CIRCLE ± 1/16"

BOLT HOLES SHALL BE EQUALLY SPACED ± 1/64"

DIAMETERS A, B AND C TO BE CONCENTRIC ABOUT CENTERLINE ± 1/16"

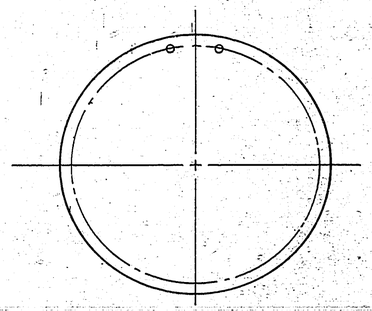

SYMBOL	REVISION	DATE	BY	APPV'D.

Ameron PIPE PRODUCTS GROUP

Russian River - Contract #2

DRAWN	KW	12-11-75	AWWA CLASS "D" BLIND FLG.
CHECKED			2205 384.0
APPV'D.			60-4-102.230.140

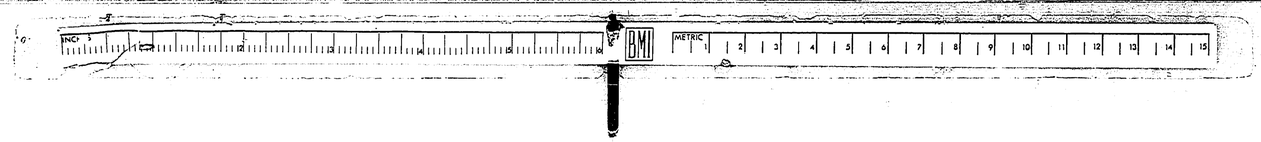

FLAG	ITEM NO.	QUANTITY THIS DWG.	DESCRIPTION	MATERIAL SPECIFICATION
	310	4	6" TENSION LUGS	

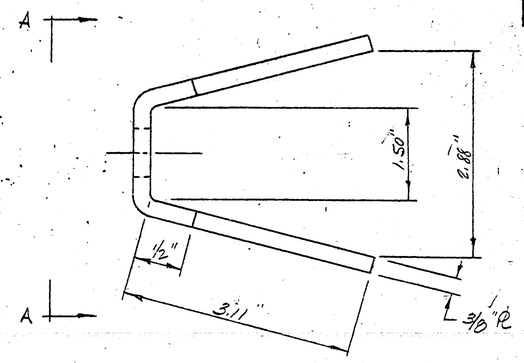

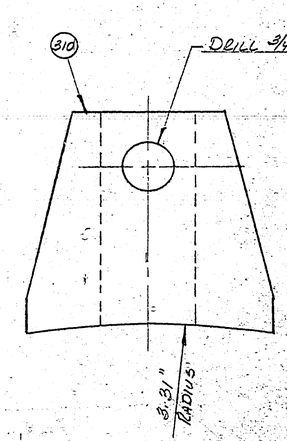

SECTION A-A

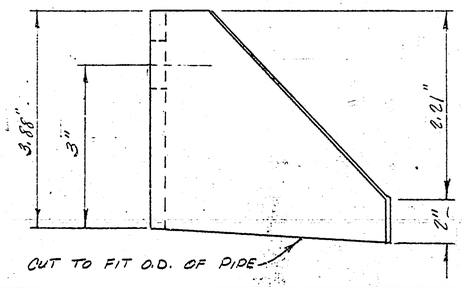

CHANGE ORDERS	SYMBOL	REVISION	DATE	BY	APPV'D.

UNLESS OTHERWISE SPECIFIED DIMENSIONS ARE IN INCHES
TOLERANCES
FRACT. ± | .X ± | .XX ± | .XXX ± | ANGLE ±

DWG. SCALE

Ameron PIPE PRODUCTS GROUP

RUSSIAN RIVER - CONTRACT #2

DRAWN BW 12-11-75
CHECKED
APPV'D. 1"

2206

60-4-102.230.141

1000-1000 (8/70)

FLAG	ITEM NO.	QUANTITY THIS DWG.	DESCRIPTION	MATERIAL SPECIFICATION
	326	4	36" CROTCH PLATE (48"Rad)	

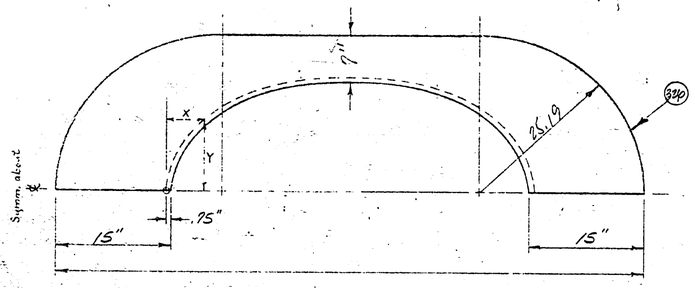

X	0	.85	3.25	6.75	11.30	16.20	21.20	26.20	31.10	35.65	39.15	41.55	42.40	
Y	0	4.95	9.50	13.45	16.45	18.3	18.95	18.3	16.45	13.45	9.50	4.95	0	

A	0	.62	2.6	5.45	9.4	14.0	16.94	23.9	28.4	32.3	35.5	37.2	37.88	
B	0	.55	2.0	4.0	6.25	8.1	8.85	8.1	6.25	4.0	2.0	.55	0	

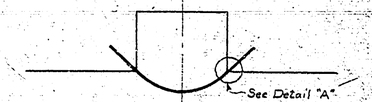

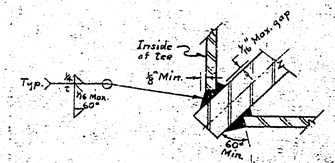

DETAIL "A"

CHANGE ORDERS	SYMBOL	REVISION	DATE	BY	APP'V'D.

UNLESS OTHERWISE SPECIFIED DIMENSIONS ARE IN INCHES

TOLERANCES

FRACT.	X	XX	XXX	ANGLE
±	±	±	±	±

DWG. SCALE

Ameron PIPE PRODUCTS GROUP

Russian River - Contract #2

DRAWN	JW	12-11-75
CHECKED		
APP'V'D.		

2265 2270

60-4-102.230.142

1000-1000 (8/70)