SONOMA COUNTY WATER AGENCY

RUSSIAN RIVER-COTATI INTERTIE PROJECT

PIPELINE CONTRACT NO. 2

HALL ROAD TO COTATI RESERVOIR

GENERAL NOTES

1. ELEVATIONS SHOWN ARE IN FEET & DECIMALS THEREOF ABOVE N.G.S. M.S.L.
2. STATIONS SHOWN ON PLAN & PROFILE ARE HORIZONTAL DISTANCES UNLESS OTHERWISE NOTED.
3. ALL STATIONS, GRADES & ELEVATION ARE SUBJECT TO REVISION TO SUIT FIELD CONDITIONS.
4. DRAWINGS ARE DESIGNATED BY THEIR LAST THREE DIGITS, e.g., DRAWING NO. 60-4-102.201 IS REFERRED TO AS DRAWING NO. 201, ETC.

LEGEND

FACILITIES TO BE CONSTRUCTED

CENTERLINE OF RIGHT OF WAY
ELECTROLYSIS TEST STATION ..... TS 2P
GALVANIC ANODE ..... GA A
PRE = PERMANENT REFERENCE ELECTRODE
VEGETATION
EROSION CONTROL
PERMANENT PASTURE REESTABLISHMENT
INSULATION FLANGE
HIGH PRESSURE PIPELINE WARNING SIGN
MANHOLE
MAINLINE VALVE
AIR VALVE
PRESSURE RELIEF VALVE
TURNOUT
BLOWOFF
BLIND TEE OR LATERAL
AIR VALVE AROUND MAINLINE VALVE
FIELD GATE ON ℄ OF R/W

CLASS OF BEDDING & BACKFILL DESIGNATION PER DWG. NO. WA-7 SPECIFIC PIPE ELEVATIONS SHOWN ON PIPE PROFILES ARE FOR OUTSIDE TOP OF PIPE.

EXISTING FACILITIES

GAS LINE ··· G ···
SANITARY SEWER • SS •
WATER LINE 6"W
TELEVISION CABLE TV
ELECTRIC CABLE E
TELEPHONE CABLE ▲
FENCE x
PROPERTY LINE PL
POWER AND/OR TELEPHONE CABLE & GUY

OTHER INFORMATION

SOIL SAMPLE LOCATION
SURVEY CONTROL POINT A-87
REFERENCE POINTS FOR LOCATING PIPE CENTERLINE

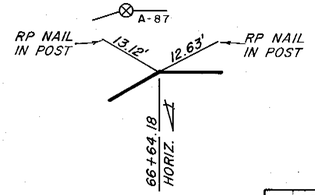

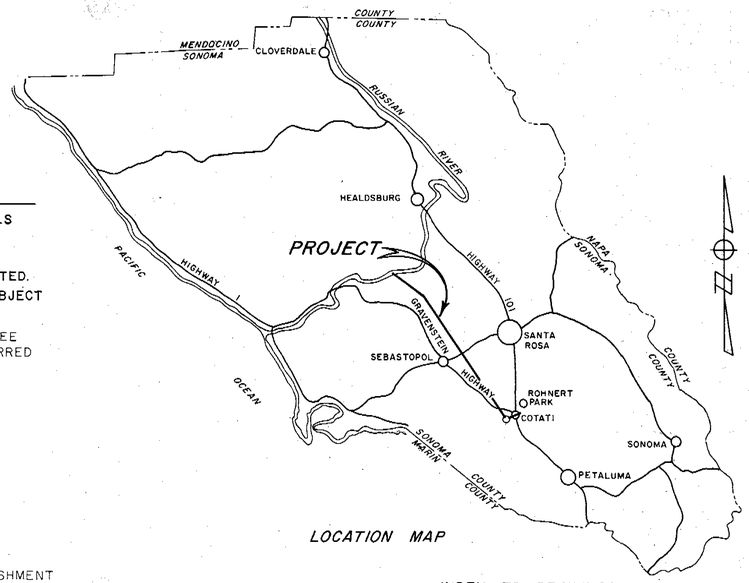

LOCATION MAP

INDEX TO DRAWINGS

SHT. NO.	DRAWING NO.	TITLE
1	60-4-102.201	LOCATION MAP & INDEX TO DRAWINGS
2	102.202	HYDRAULIC GRADE LINE
3	102.203	STA. 302+70 TO STA. 314+10
4	102.204	STA. 314+10 TO STA. 344+30
5	102.205	STA. 344+30 TO STA. 374+30
6	102.206	STA. 374+30 TO STA. 404+50
7	102.207	STA. 404+50 TO STA. 434+55
8	102.208	STA. 434+55 TO STA. 464+70
9	102.209	STA. 464+70 TO STA. 494+50
10	102.210	STA. 494+50 TO STA. 524+45
11	102.211	STA. 524+45 TO STA. 554+50
12	102.212	STA. 554+50 TO STA. 584+50
13	102.213	STA. 584+50 TO STA. 614+65
14	102.214	STA. 614+65 TO STA. 644+70
15	102.215	STA. 644+70 TO STA. 674+65
16	102.216	STA. 674+65 TO STA. 704+75
17	102.217	STA. 704+75 TO STA. 735+15
18	102.218	STA. 735+15 TO STA. 766+00
19	102.219	STA. 766+00 TO STA. 783+90
20	102.220	STA. 783+90 TO STA. 805+40
21	102.221	STA. 805+40 TO STA. 826+55.28
22	102.222	RAILROAD & HIGHWAY CROSSINGS
23	102.223	LAGUNA de SANTA ROSA CROSSING #2
24	102.224	WASHOE CREEK CROSSING
25	102.225	COTATI RESERVOIR CONNECTION
26	102.226	WELD LENGTH FOR THRUST ON PIPE
27	102.227	LOG OF BORINGS
28	102.228	STRIP SITE
29	102.229	MISCELLANEOUS DETAILS
30	WA-1	GALVANIC ANODES & ELECTROL. TEST STAS.
31	WA-2	DISTRIBUTION TURNOUTS TYPE A & TYPE B
32	WA-3	MAIN LINE VALVE TYPE A & B
33	WA-4	BLOWOFF TYPE A & B
34	WA-5	AIR VALVE INSTALLATION TYPE A, B & C
35	WA-6	PRESSURE RELIEF VALVE INSTALLATION
36	WA-7	PIPE BEDDING, BACKFILL & TRENCH SURFACING
37	WA-8	HIGH PRESSURE PIPELINE WARNING SIGN

UTILITY NOTES

THE AGENCY HAS, TO THE BEST OF ITS ABILITY, DELINEATED ON THE DRAWINGS UTILITY INSTALLATIONS TO BE ENCOUNTERED WITHIN THE LIMITS OF THE WORK. SUCH INFORMATION IS BASED UPON INFORMATION FURNISHED TO THE AGENCY BY THE UTILITY OWNERS AND THE AGENCY DOES NOT EITHER EXPRESSLY OR BY IMPLICATION GUARANTEE THAT UTILITY INSTALLATIONS WILL BE FOUND AT THE LOCATIONS OR DEPTHS INDICATED. THE AGENCY ASSUMES NO RESPONSIBILITY FOR THE ACCURACY OF THE INFORMATION SHOWN OR FOR THE INADVERTENT OMISSION OF ANY SUCH INFORMATION. PROFILES DO NOT SHOW ALL UTILITY SERVICE LATERALS.

No.	DATE	REVISION	By
		AS BUILT	

RUSSIAN RIVER - COTATI INTERTIE PROJECT
HALL ROAD TO COTATI RESERVOIR
LOCATION MAP & INDEX TO DRAWINGS

SCALE: AS SHOWN | APPROVED CHIEF ENGINEER | DRAWN SKMc
DATE: JULY 15, 1975 | RE 8271 | CHECKED
SONOMA COUNTY WATER AGENCY
DESIGNED | SUBMITTED | DRAWING NUMBER 60-4-102.201

Return to Index

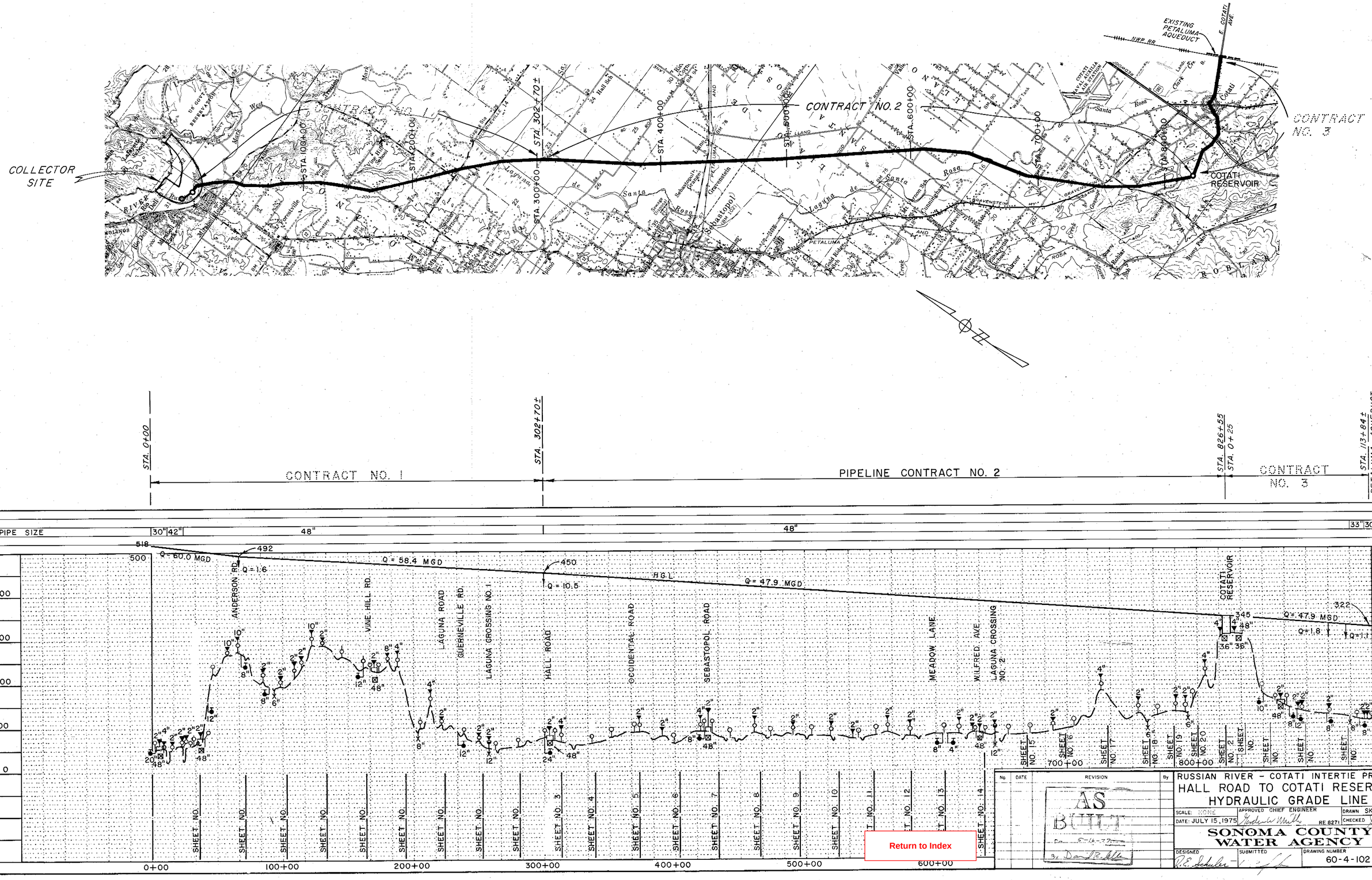
EXISTING PETALUMA AQUEDUCT
NWP RR
E. COTATI AVE.
CONTRACT NO. 2
CONTRACT NO. 3
COLLECTOR SITE
COTATI RESERVOIR
STA. 100+00
STA. 200+00
STA. 300+00
STA. 302+70±
STA. 400+00
STA. 500+00
STA. 600+00
STA. 700+00
STA. 800+00
STA. 0+00
STA. 302+70±
STA. 826+55
STA. 0+25
STA. 113+84±
PETALUMA AQUEDUCT
CONTRACT NO. 1
PIPELINE CONTRACT NO. 2
CONTRACT NO. 3
PIPE SIZE
30" 42"
48"
48"
33" 30"
Q = 60.0 MGD
Q = 58.4 MGD
Q = 47.9 MGD
Q = 47.9 MGD
Q = 1.6
Q = 10.5
Q = 1.8
Q = 1.1
H.G.L.
ANDERSON RD.
VINE HILL RD.
LAGUNA ROAD
GUERNEVILLE RD.
LAGUNA CROSSING NO. 1
HALL ROAD
OCCIDENTAL ROAD
SEBASTOPOL ROAD
MEADOW LANE
WILFRED AVE.
LAGUNA CROSSING NO. 2
COTATI RESERVOIR
SHEET NO. 3
SHEET NO. 4
SHEET NO. 5
SHEET NO. 6
SHEET NO. 7
SHEET NO. 8
SHEET NO. 9
SHEET NO. 10
SHEET NO. 14
SHEET NO. 15
SHEET NO. 16
SHEET NO. 17
SHEET NO. 18
SHEET NO. 19
SHEET NO. 20
SHEET NO. 21
0+00
100+00
200+00
300+00
400+00
500+00
600+00
700+00
800+00
Return to Index
AS BUILT
RUSSIAN RIVER - COTATI INTERTIE PROJECT
HALL ROAD TO COTATI RESERVOIR
HYDRAULIC GRADE LINE
SCALE: NONE
DATE: JULY 15, 1975
APPROVED CHIEF ENGINEER
RE 8271
DRAWN SKMc
CHECKED
SONOMA COUNTY WATER AGENCY
DESIGNED
SUBMITTED
DRAWING NUMBER
60-4-102.202
SHEET NO. 2

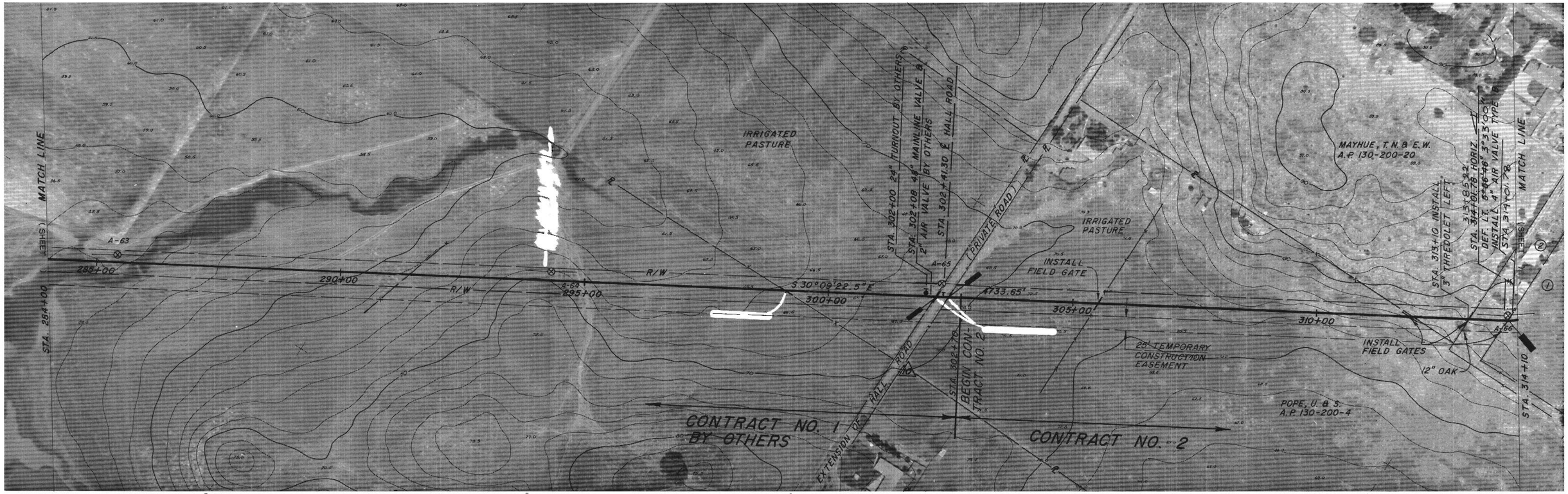

HEAD in ft.	~~400~~ 440 ; ~~380~~ 440
SPECIAL	WELD JOINTS
PIPE SIZE & TYPE	48"
REVEGETATION	
BEDDING/BACKFILL	d/D ; d/D

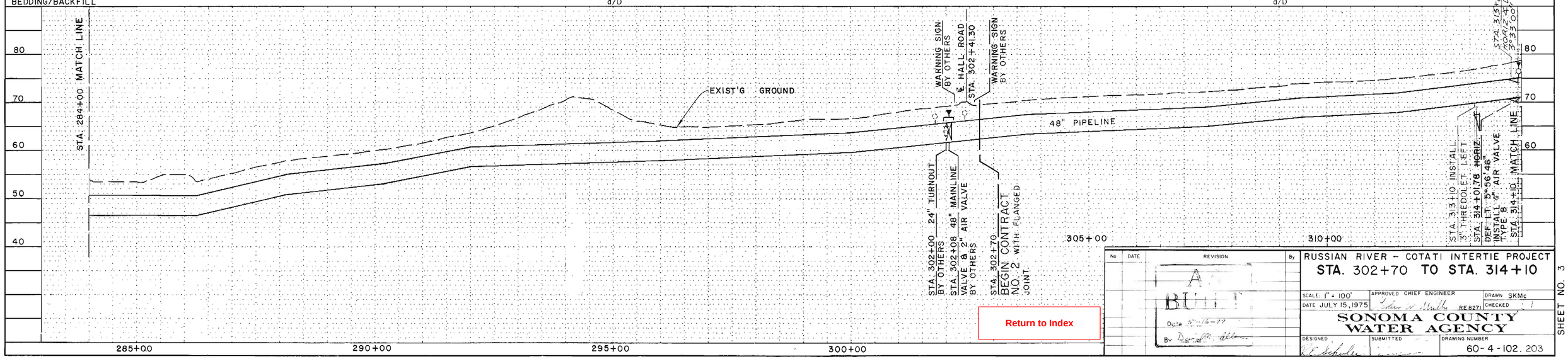

Return to Index

No	DATE	REVISION	By
		AS BUILT Date 5-16-77 By Dean R. Allen	

RUSSIAN RIVER – COTATI INTERTIE PROJECT

STA. 302+70 TO STA. 314+10

SCALE: 1" = 100'
DATE JULY 15, 1975
APPROVED CHIEF ENGINEER RE 8271
DRAWN SKMc
CHECKED

SONOMA COUNTY WATER AGENCY

DESIGNED
SUBMITTED
DRAWING NUMBER 60-4-102.203

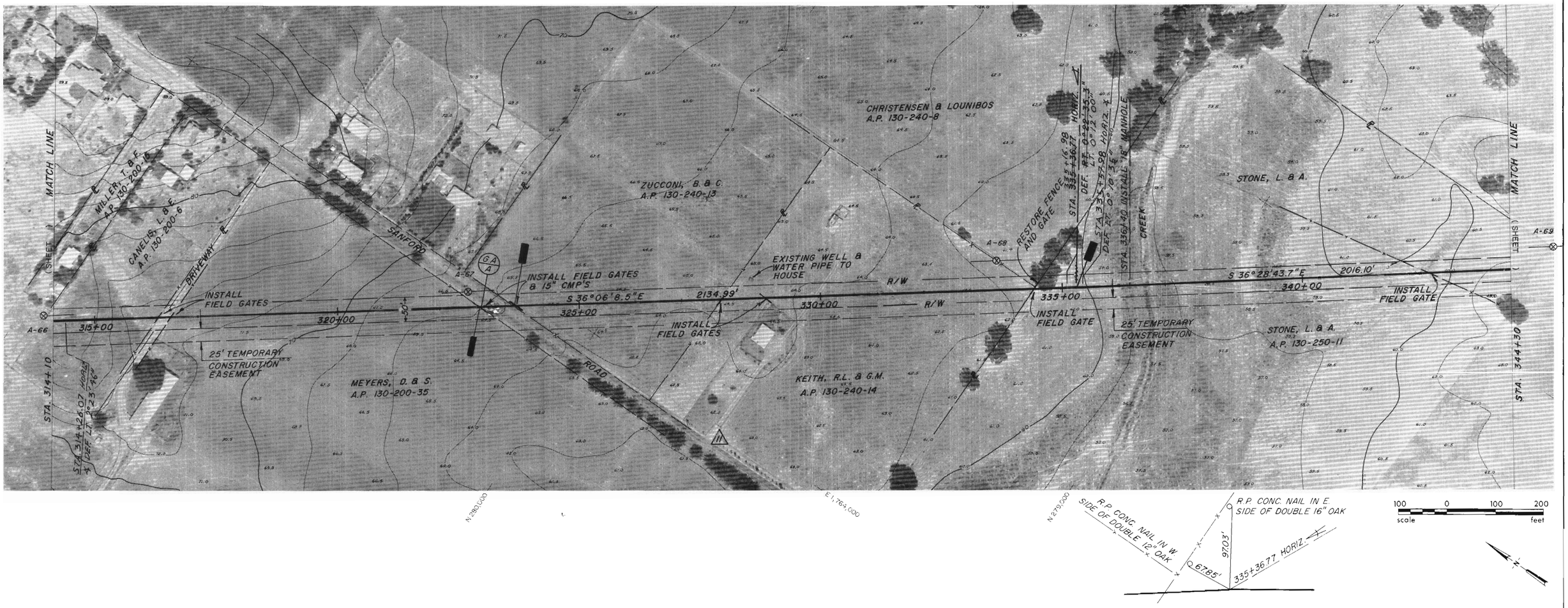

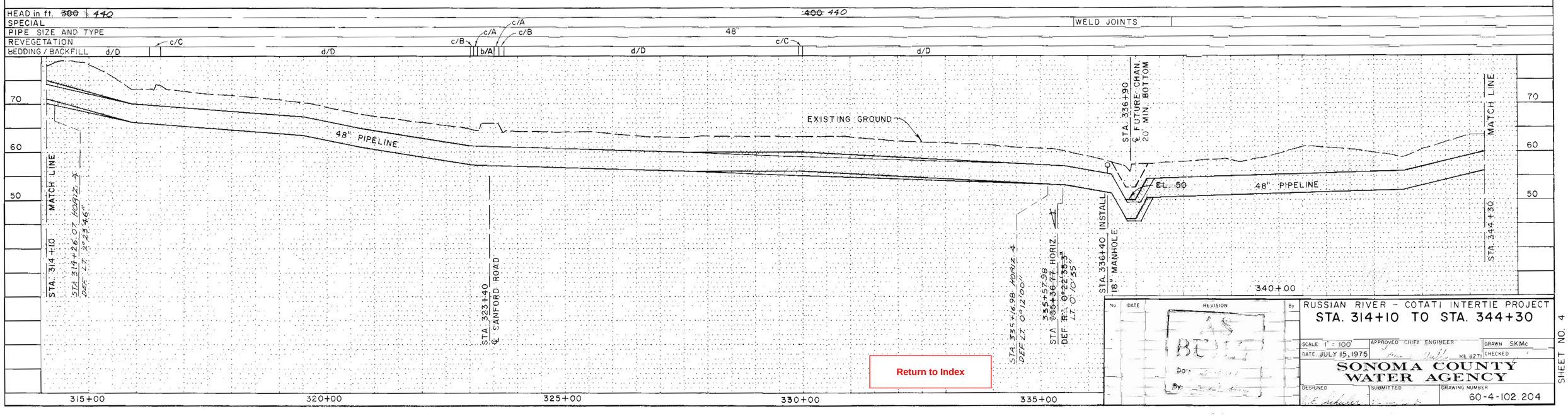

Return to Index

No.	DATE	REVISION	By
		AS BUILT	

RUSSIAN RIVER - COTATI INTERTIE PROJECT

STA. 314+10 TO STA. 344+30

SCALE: 1" = 100'
DATE: JULY 15, 1975
APPROVED: CHIEF ENGINEER
RE 8271
DRAWN: S.K.Mc
CHECKED:

SONOMA COUNTY WATER AGENCY

DESIGNED
SUBMITTED
DRAWING NUMBER 60-4-102.204

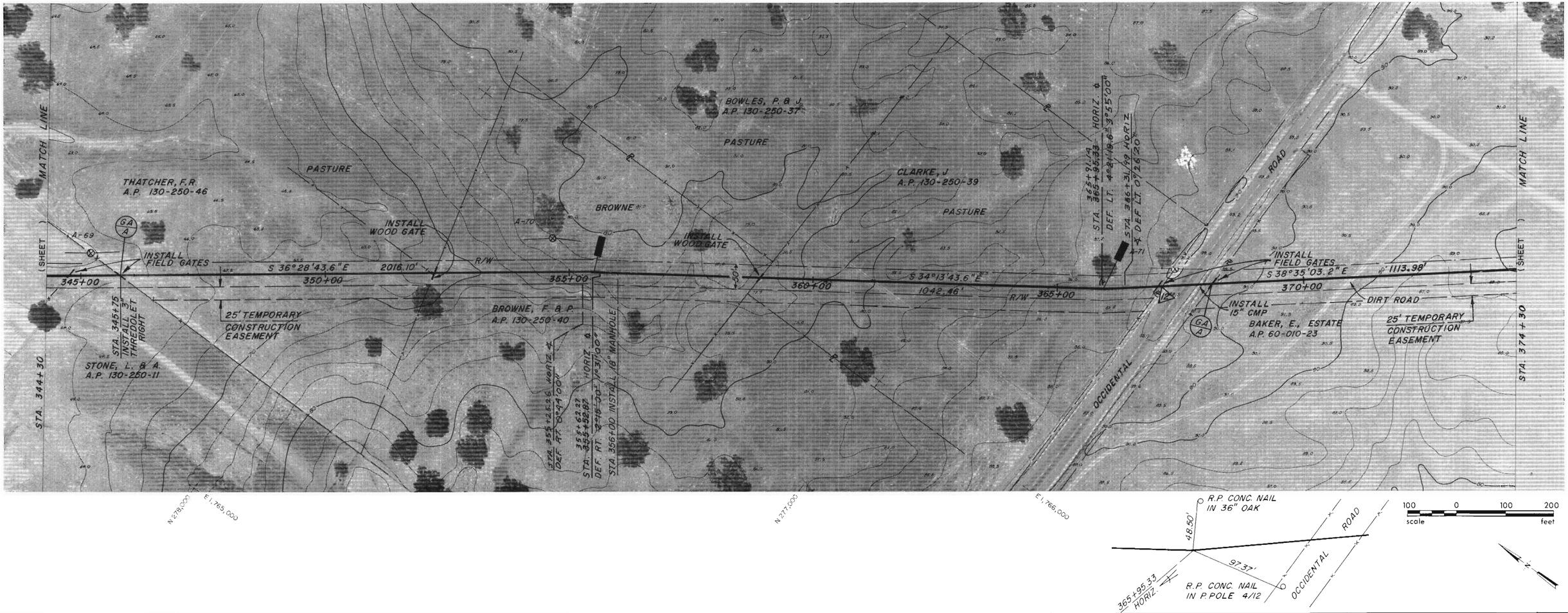

HEAD in ft.	~~400~~ 440	~~380~~ 440	360
SPECIAL			
PIPE SIZE AND TYPE	48"		48"
REVEGETATION			c/B c/A b/A c/A c/B
BEDDING / BACKFILL	d/D		d/D

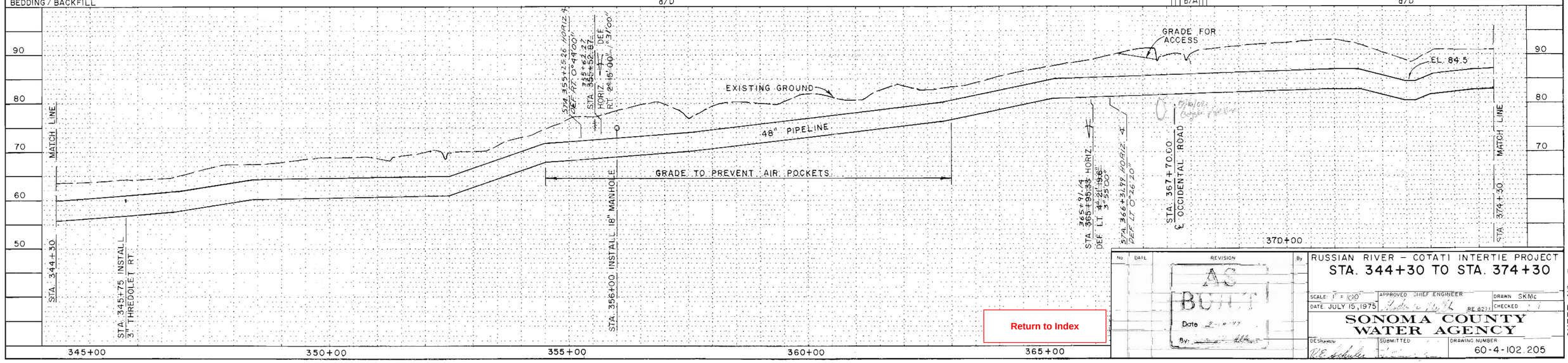

No	DATE	REVISION	By
		AS BUILT Date 2-6-77 By:	

RUSSIAN RIVER – COTATI INTERTIE PROJECT

STA. 344+30 TO STA. 374+30

SCALE: 1" = 100' | APPROVED CHIEF ENGINEER | DRAWN SKMc

DATE JULY 15, 1975 | RE 8271 | CHECKED

SONOMA COUNTY WATER AGENCY

DESIGNED | SUBMITTED | DRAWING NUMBER 60-4-102.205

Return to Index

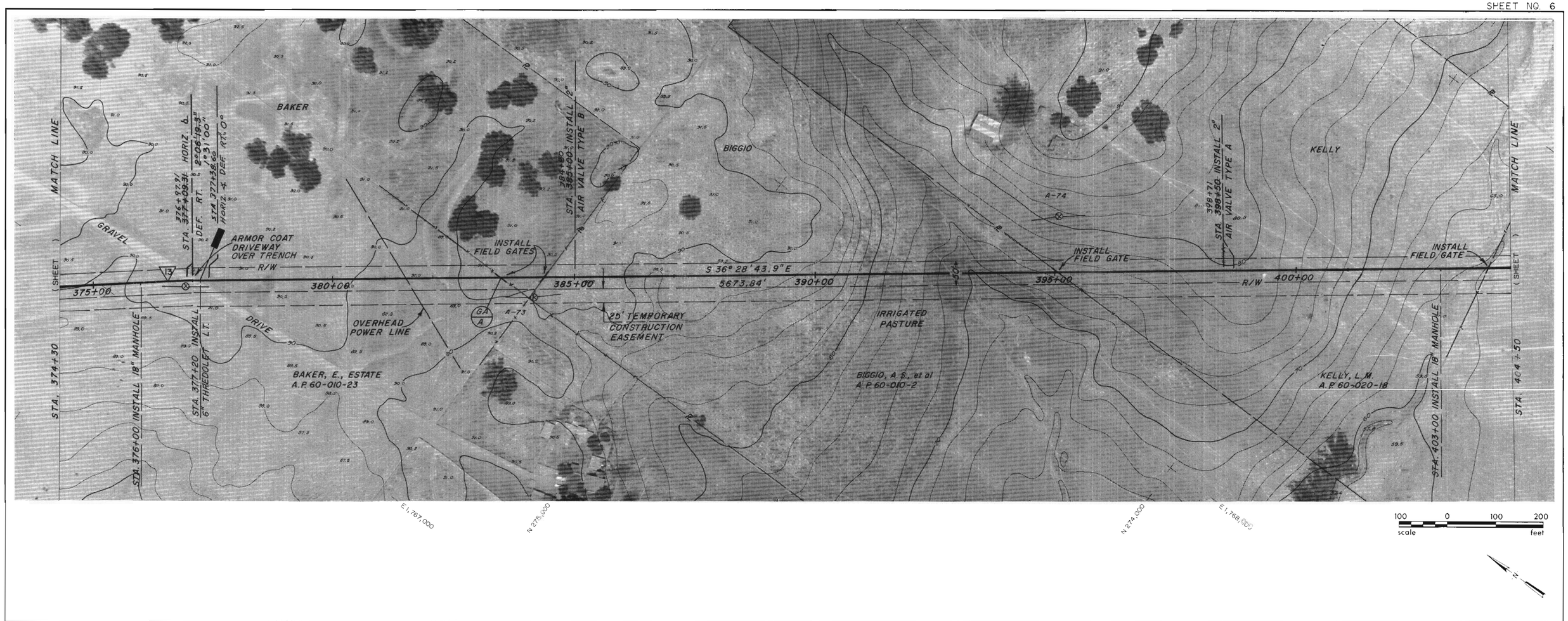

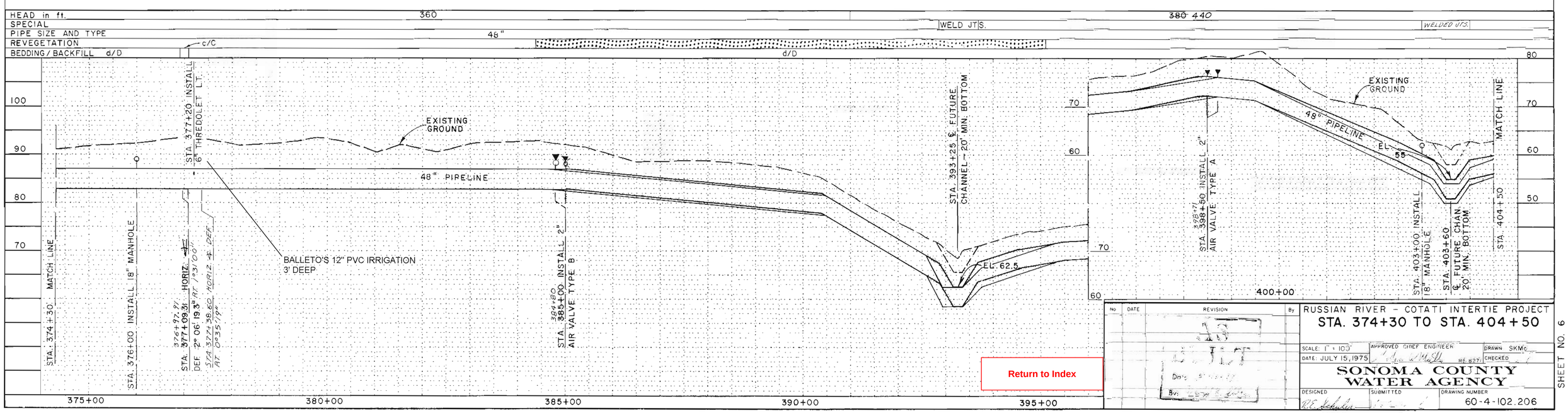

No	DATE	REVISION	By

RUSSIAN RIVER – COTATI INTERTIE PROJECT

STA. 374+30 TO STA. 404+50

SCALE: 1" = 100' | APPROVED CHIEF ENGINEER | DRAWN SKMc

DATE: JULY 15, 1975 | RE 827 | CHECKED

SONOMA COUNTY WATER AGENCY

DESIGNED | SUBMITTED | DRAWING NUMBER 60-4-102.206

Return to Index

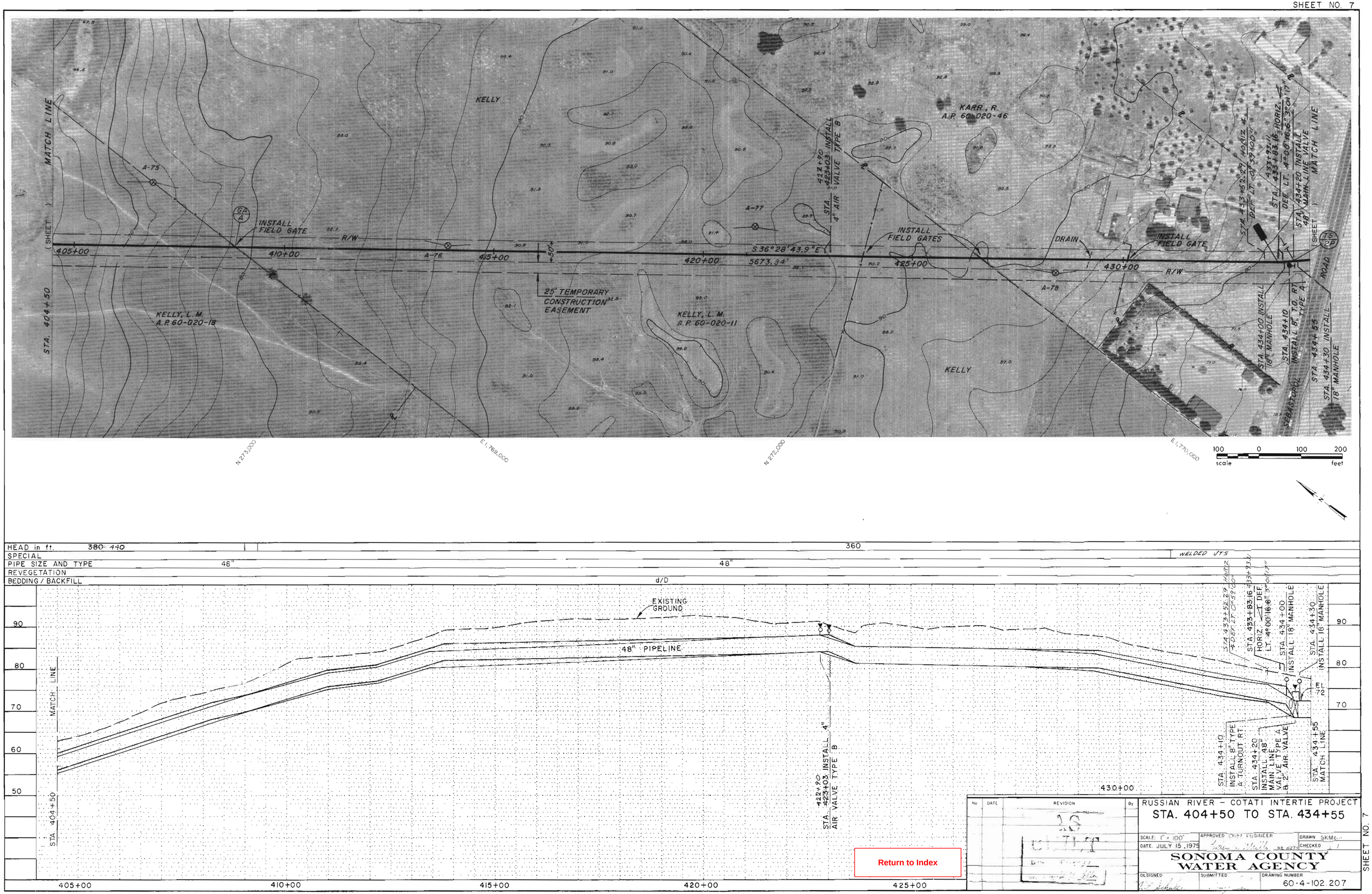

Return to Index

No	DATE	REVISION	By

RUSSIAN RIVER – COTATI INTERTIE PROJECT

STA. 404+50 TO STA. 434+55

SCALE: 1" = 100'
DATE: JULY 15, 1975
APPROVED CHIEF ENGINEER
DRAWN SKMc
CHECKED

SONOMA COUNTY WATER AGENCY

DESIGNED
SUBMITTED
DRAWING NUMBER 60-4-102.207

SHEET NO. 7

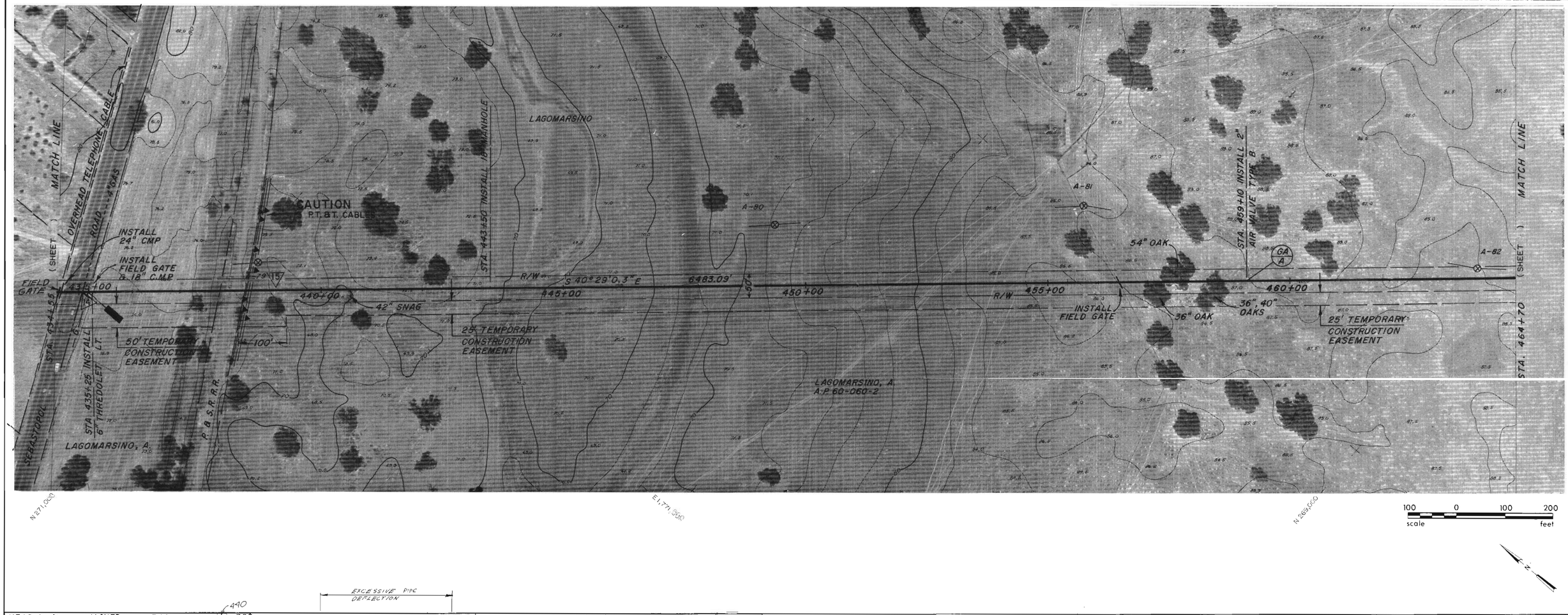

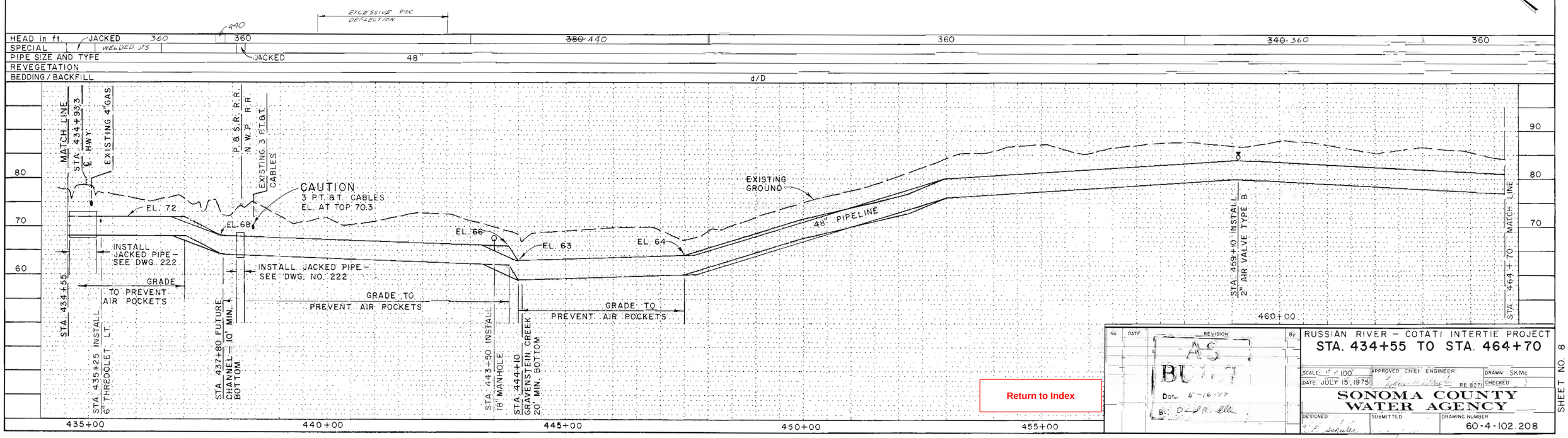

Return to Index

No	DATE	REVISION	By
		AS BUILT Date 6-16-77 By: D. R. Ellis	

RUSSIAN RIVER – COTATI INTERTIE PROJECT

STA. 434+55 TO STA. 464+70

SCALE: 1" = 100'
DATE: JULY 15, 1975
APPROVED CHIEF ENGINEER: RE 8271
DRAWN: SKMc
CHECKED:

SONOMA COUNTY WATER AGENCY

DESIGNED: W. F. Schulter
SUBMITTED:
DRAWING NUMBER: 60-4-102.208

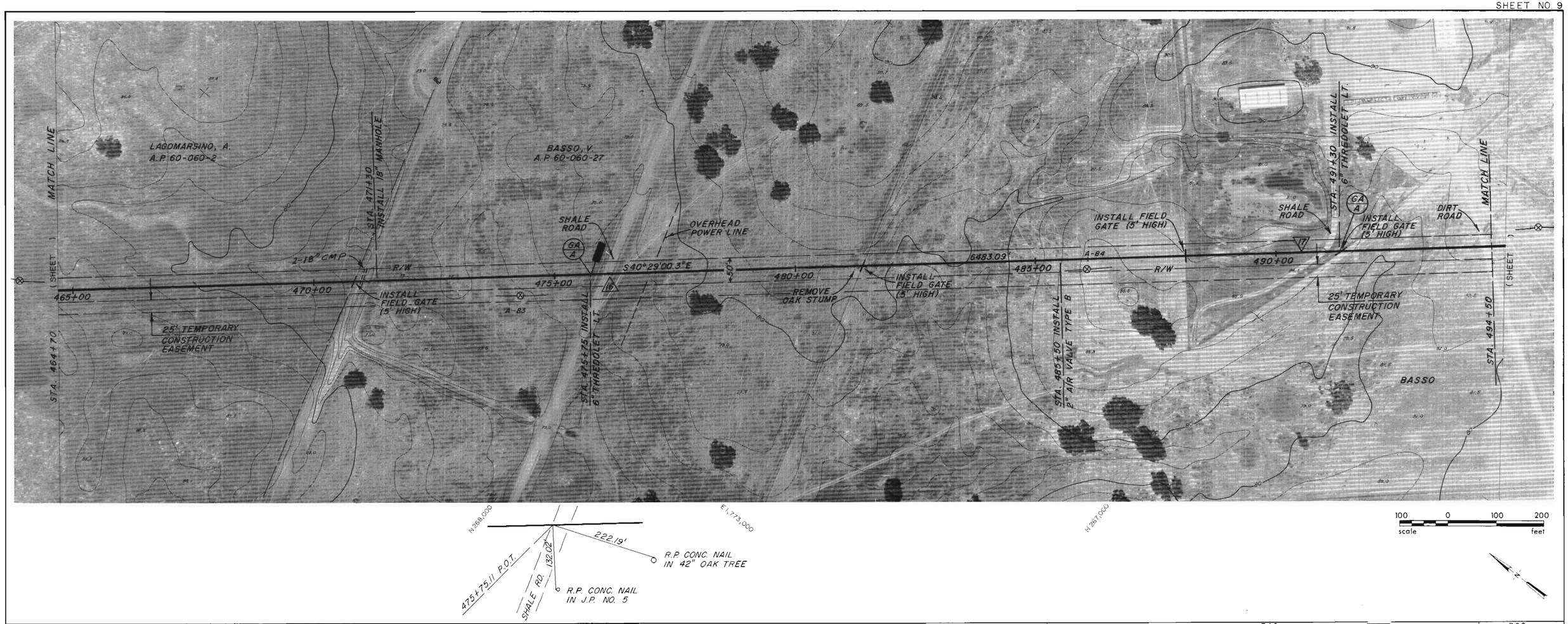

Return to Index

No	DATE	REVISION	By
		AS BUILT	

RUSSIAN RIVER - COTATI INTERTIE PROJECT

STA. 464+70 TO STA. 494+50

SCALE: 1" = 100'
DATE: JULY 15, 1975
APPROVED CHIEF ENGINEER
DRAWN SKMc
CHECKED

SONOMA COUNTY WATER AGENCY

DESIGNED
SUBMITTED
DRAWING NUMBER 60-4-102.209

SHEET NO. 9

Return to Index

No	DATE	REVISION	By
		AS BUILT DATE 5-16-77 By: [signature]	

RUSSIAN RIVER – COTATI INTERTIE PROJECT

STA. 494+50 TO STA. 524+45

SCALE: 1" = 100'
DATE: JULY 15, 1975
APPROVED CHIEF ENGINEER [signature] RE 827
DRAWN SKMc
CHECKED

SONOMA COUNTY WATER AGENCY

DESIGNED R.E. Schuler
SUBMITTED [signature]
DRAWING NUMBER 60-4-102.210

SHEET NO 10

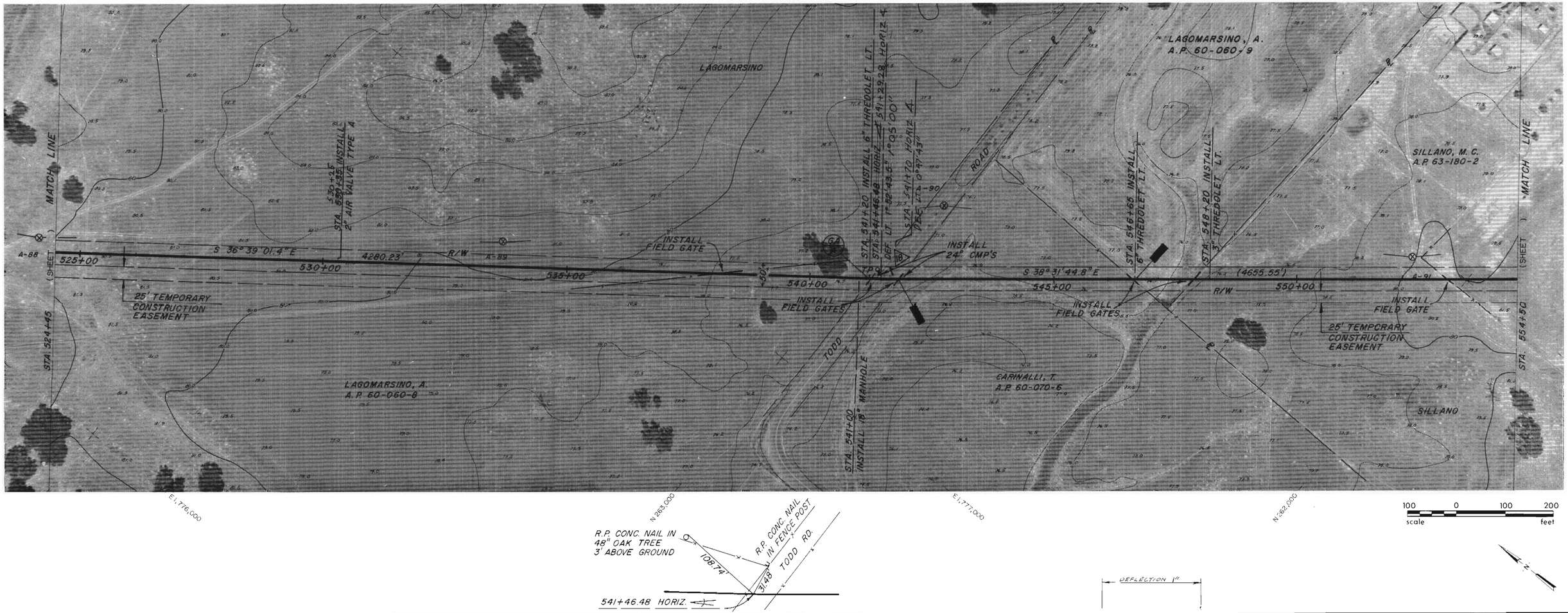

HEAD in ft.	~~340~~ 360
SPECIAL	
PIPE SIZE AND TYPE	48" c/A b/A c/A c/A c/B c/B 48"
REVEGETATION	
BEDDING / BACKFILL	d/D d/D

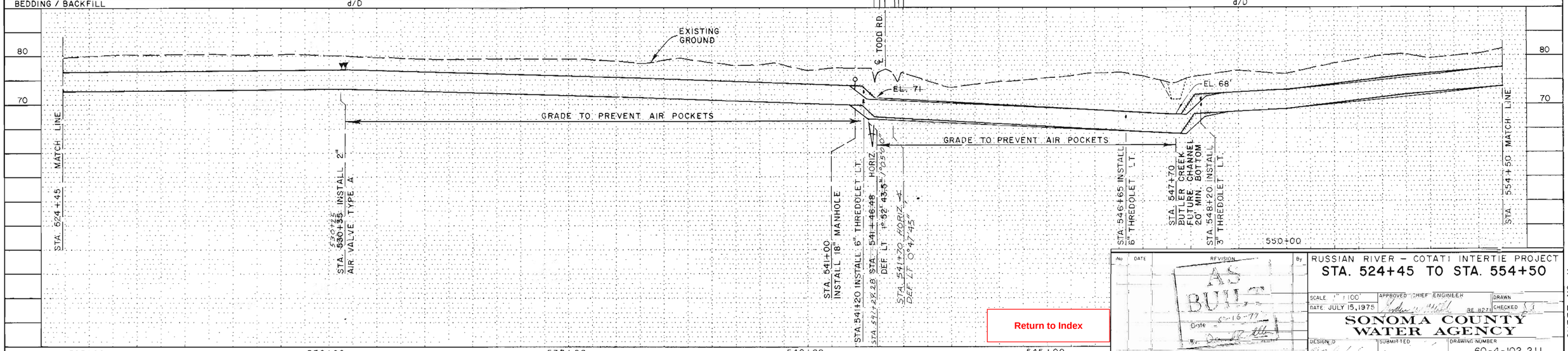

Return to Index

No	DATE	REVISION	By
		AS BUILT Date 5-16-77	

RUSSIAN RIVER – COTATI INTERTIE PROJECT

STA. 524+45 TO STA. 554+50

SCALE 1" = 100' | APPROVED CHIEF ENGINEER | DRAWN

DATE JULY 15, 1975 | RE 8271 | CHECKED

SONOMA COUNTY WATER AGENCY

DESIGNED | SUBMITTED | DRAWING NUMBER 60-4-102.211

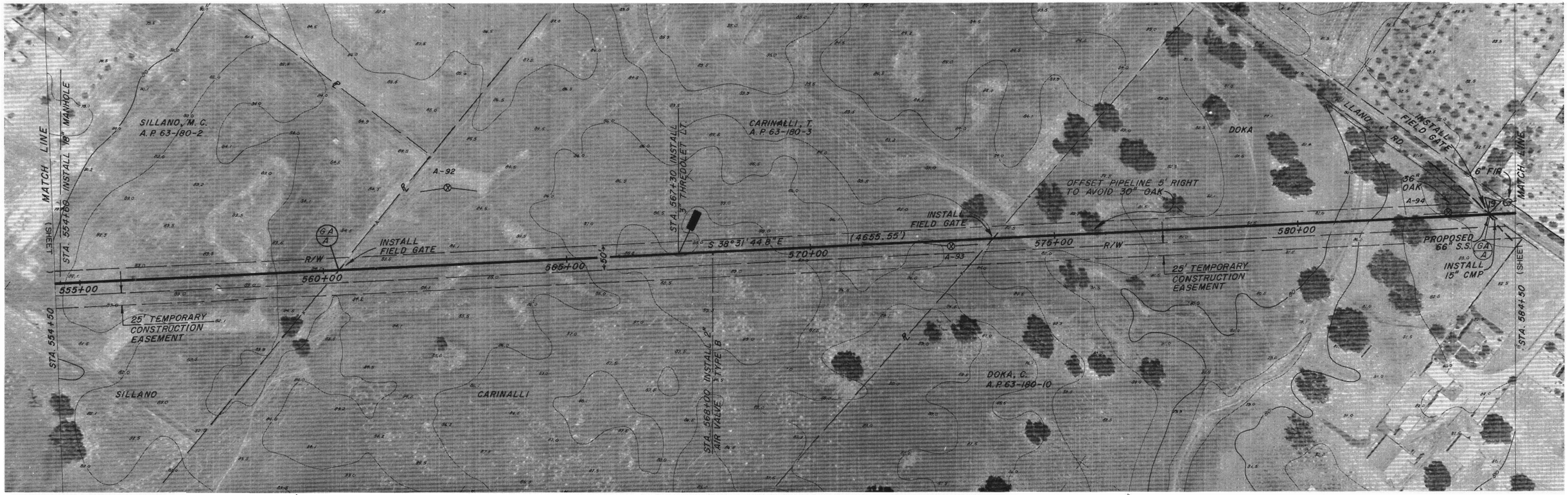

HEAD in ft.	~~340~~ 360	320	~~340~~ 360	320
SPECIAL				WELD JOINTS
PIPE SIZE AND TYPE	48"		48"	
REVEGETATION				
BEDDING / BACKFILL	d/D			

No	DATE	REVISION	By
		AS BUILT Date 5-16-77 By:	

RUSSIAN RIVER – COTATI INTERTIE PROJECT

STA. 554+50 TO STA. 584+50

SCALE: 1" = 100' | APPROVED CHIEF ENGINEER | DRAWN

DATE: JULY 15, 1975 | RE 827 | CHECKED

SONOMA COUNTY WATER AGENCY

DESIGNED | SUBMITTED | DRAWING NUMBER 60-4-102.212

Return to Index

Return to Index

No	DATE	REVISION	By
		AS BUILT Date 5-16-77 By David R. Allen	

RUSSIAN RIVER – COTATI INTERTIE PROJECT

STA. 584+50 TO STA. 614+65

SCALE 1" = 100'
DATE JULY 15, 1975
APPROVED CHIEF ENGINEER Gordon W. Miller RE 9271
DRAWN SKMc
CHECKED

SONOMA COUNTY WATER AGENCY

DESIGNED C.E. Schuler
SUBMITTED
DRAWING NUMBER 60-4-102.213

SHEET NO. 13

HEAD in ft.									320								
SPECIAL																WELDED	JOINTS
PIPE SIZE AND TYPE							48"							48"			
REVEGETATION			c/B		c/C			c/C				c/C					
BEDDING / BACKFILL		d/E		d/E		d/E			d/D				d/D		d/E	c/C	d/D

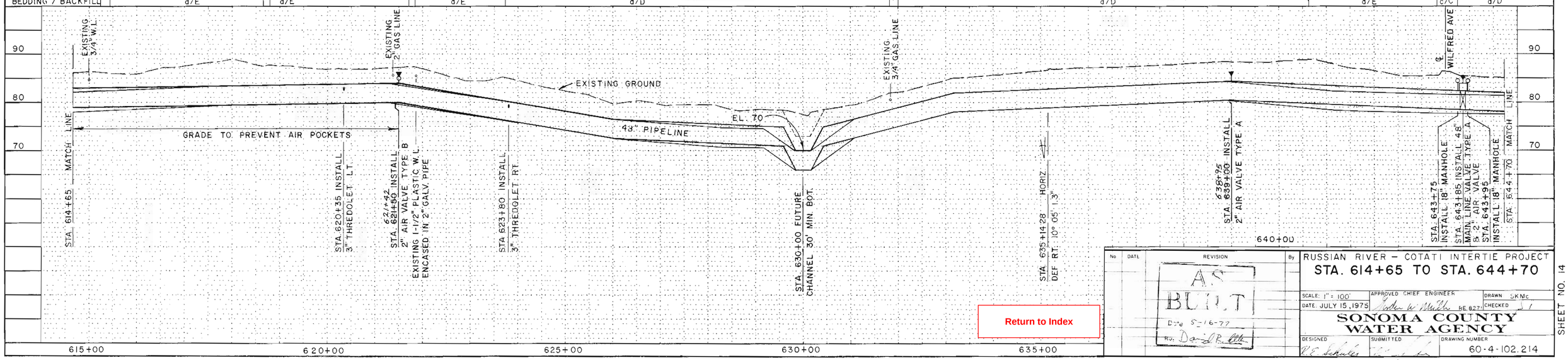

No.	DATE	REVISION	By
		AS BUILT Date 5-16-77 By David R. Otte	

RUSSIAN RIVER – COTATI INTERTIE PROJECT

STA. 614+65 TO STA. 644+70

SCALE: 1" = 100'
DATE: JULY 15, 1975
APPROVED CHIEF ENGINEER: John W. Mullen RE 8271
DRAWN: SKMc
CHECKED: J.T.

SONOMA COUNTY WATER AGENCY

DESIGNED: W.E. Schuler
SUBMITTED
DRAWING NUMBER: 60-4-102.214

Return to Index

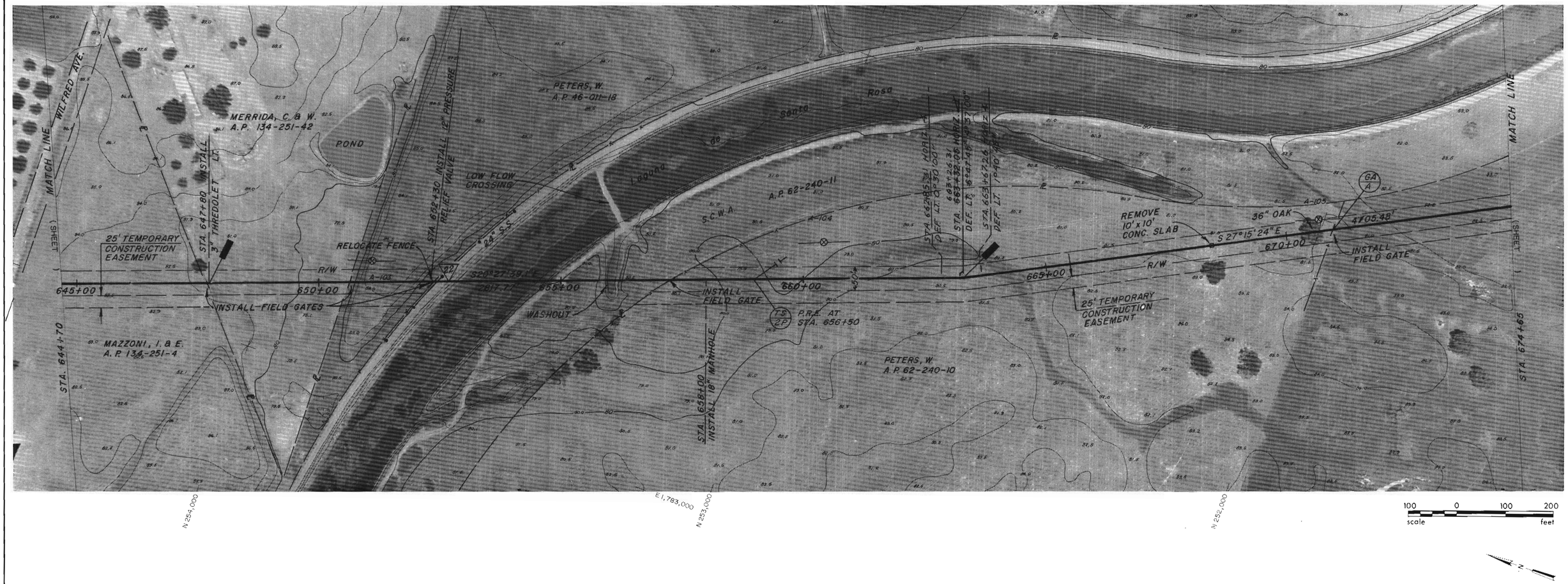

HEAD in ft.	320	~~340~~ 360		320	
SPECIAL WELDED JOINTS		WELD JOINTS			
PIPE SIZE & TYPE	48"			48"	
REVEGETATION			d/B		
BEDDING/BACKFILL	d/D	d/B	d/E	d/D	

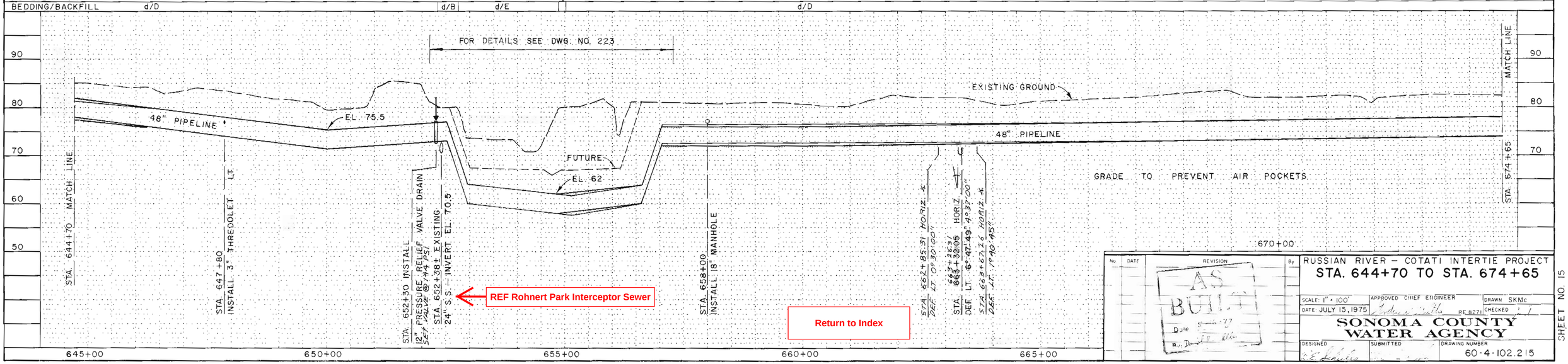

REF Rohnert Park Interceptor Sewer

Return to Index

No	DATE	REVISION	By
		AS BUILT Date By	

RUSSIAN RIVER – COTATI INTERTIE PROJECT

STA. 644+70 TO STA. 674+65

SCALE: 1" = 100' | APPROVED CHIEF ENGINEER | DRAWN SKMc

DATE: JULY 15, 1975 | RE 8271 | CHECKED

SONOMA COUNTY WATER AGENCY

DESIGNED | SUBMITTED | DRAWING NUMBER 60-4-102.215

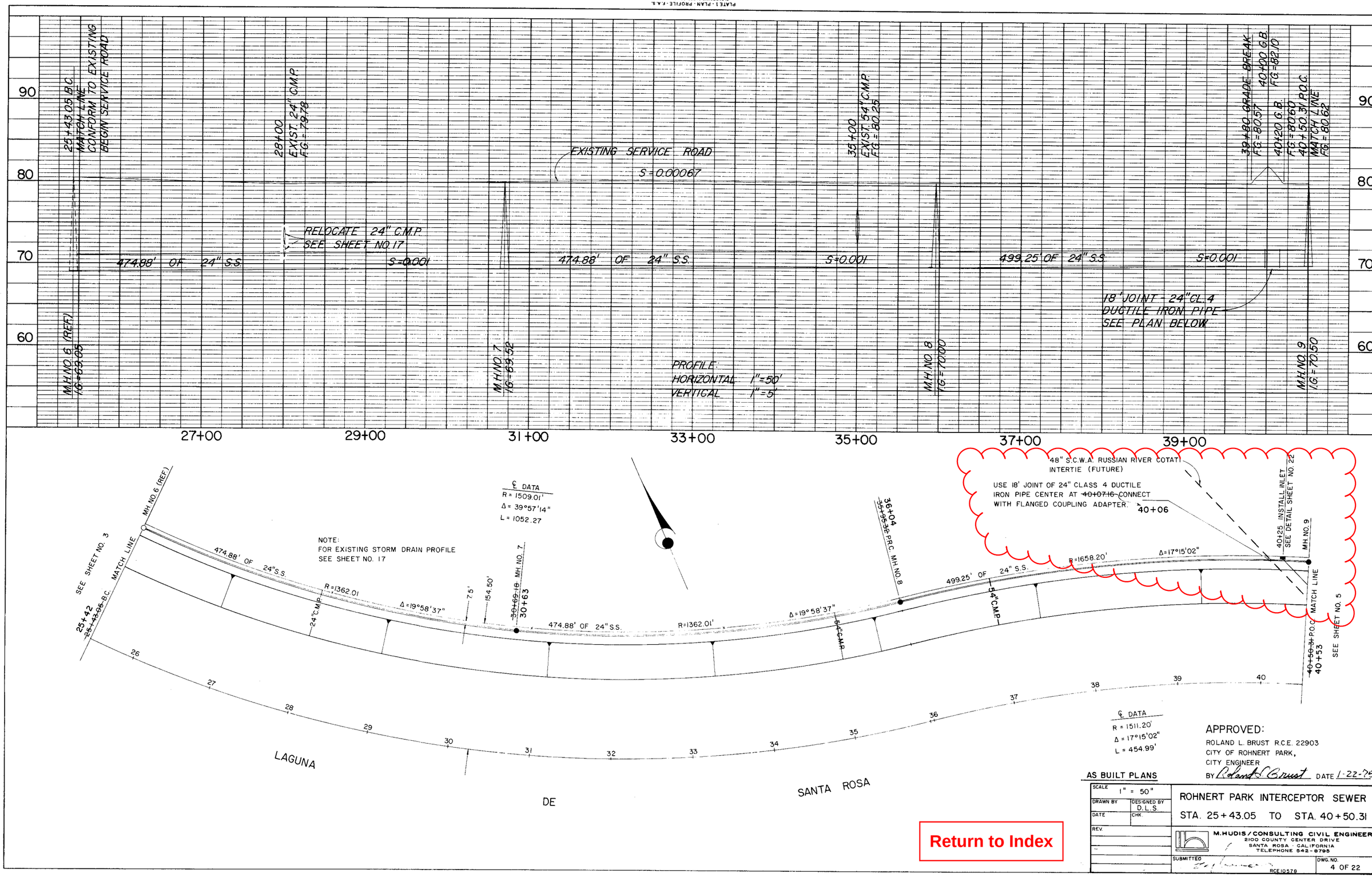

APPROVED:
ROLAND L. BRUST R.C.E. 22903
CITY OF ROHNERT PARK,
CITY ENGINEER
BY Roland L. Brust DATE 1-22-75

AS BUILT PLANS

SCALE 1" = 50"	ROHNERT PARK INTERCEPTOR SEWER
DRAWN BY / DESIGNED BY D.L.S.	STA. 25+43.05 TO STA. 40+50.31
DATE / CHK.	
REV.	M.HUDIS/CONSULTING CIVIL ENGINEER 2100 COUNTY CENTER DRIVE SANTA ROSA - CALIFORNIA TELEPHONE 542-8795
	SUBMITTED RCE10578 — DWG. NO. 4 OF 22

Return to Index

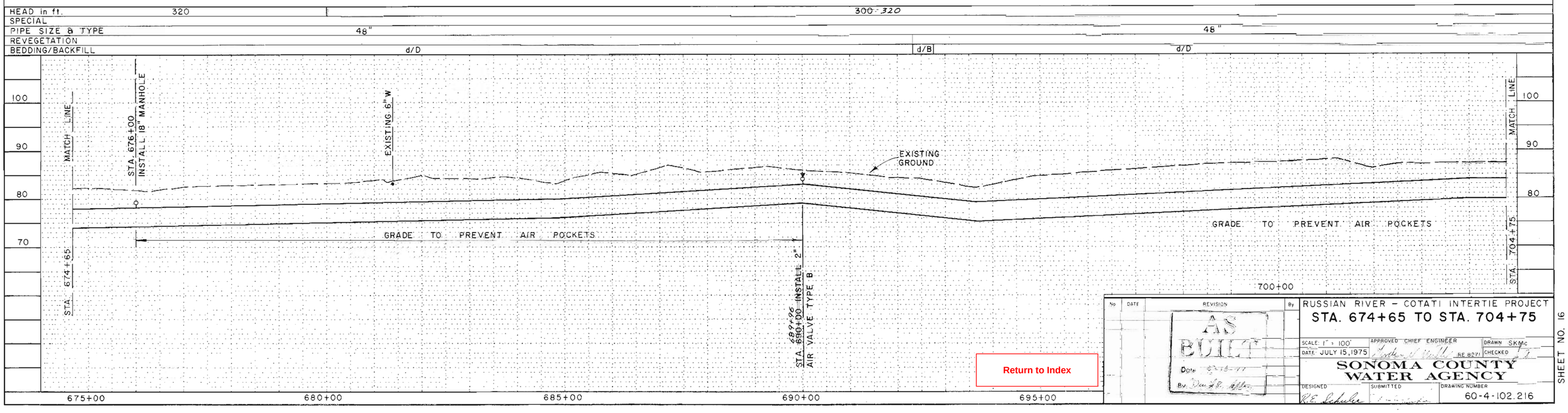

Return to Index

No	DATE	REVISION	By
		AS BUILT Date 5-16-77 By [signature]	

RUSSIAN RIVER – COTATI INTERTIE PROJECT

STA. 674+65 TO STA. 704+75

SCALE: 1" = 100'
DATE: JULY 15, 1975
APPROVED CHIEF ENGINEER [signature] RE 8271
DRAWN SKMc
CHECKED [signature]

SONOMA COUNTY WATER AGENCY

DESIGNED R.E. Schuler
SUBMITTED [signature]
DRAWING NUMBER 60-4-102.216

HEAD in ft.	~~300~~ 320	~~280~~ 320	260	~~240~~ 260	~~220~~ 260	~~200~~ 260	~~220~~ 260
SPECIAL	← WELDED JOINT						
PIPE SIZE & TYPE	48"					48"	
REVEGETATION							
BEDDING/BACKFILL	d/D	d/C	d/D				

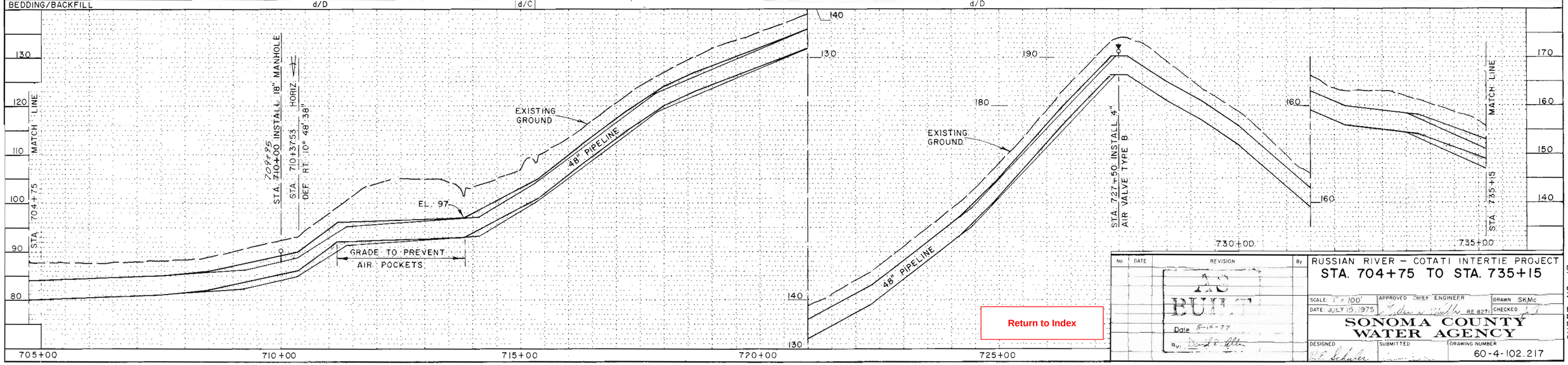

No	DATE	REVISION	By
		AS BUILT Date 5-16-77 By:	

RUSSIAN RIVER – COTATI INTERTIE PROJECT

STA. 704+75 TO STA. 735+15

SCALE: 1" = 100' | APPROVED CHIEF ENGINEER | DRAWN SKMc

DATE: JULY 15, 1975 | RE 827 | CHECKED

SONOMA COUNTY WATER AGENCY

DESIGNED | SUBMITTED | DRAWING NUMBER 60-4-102.217

Return to Index

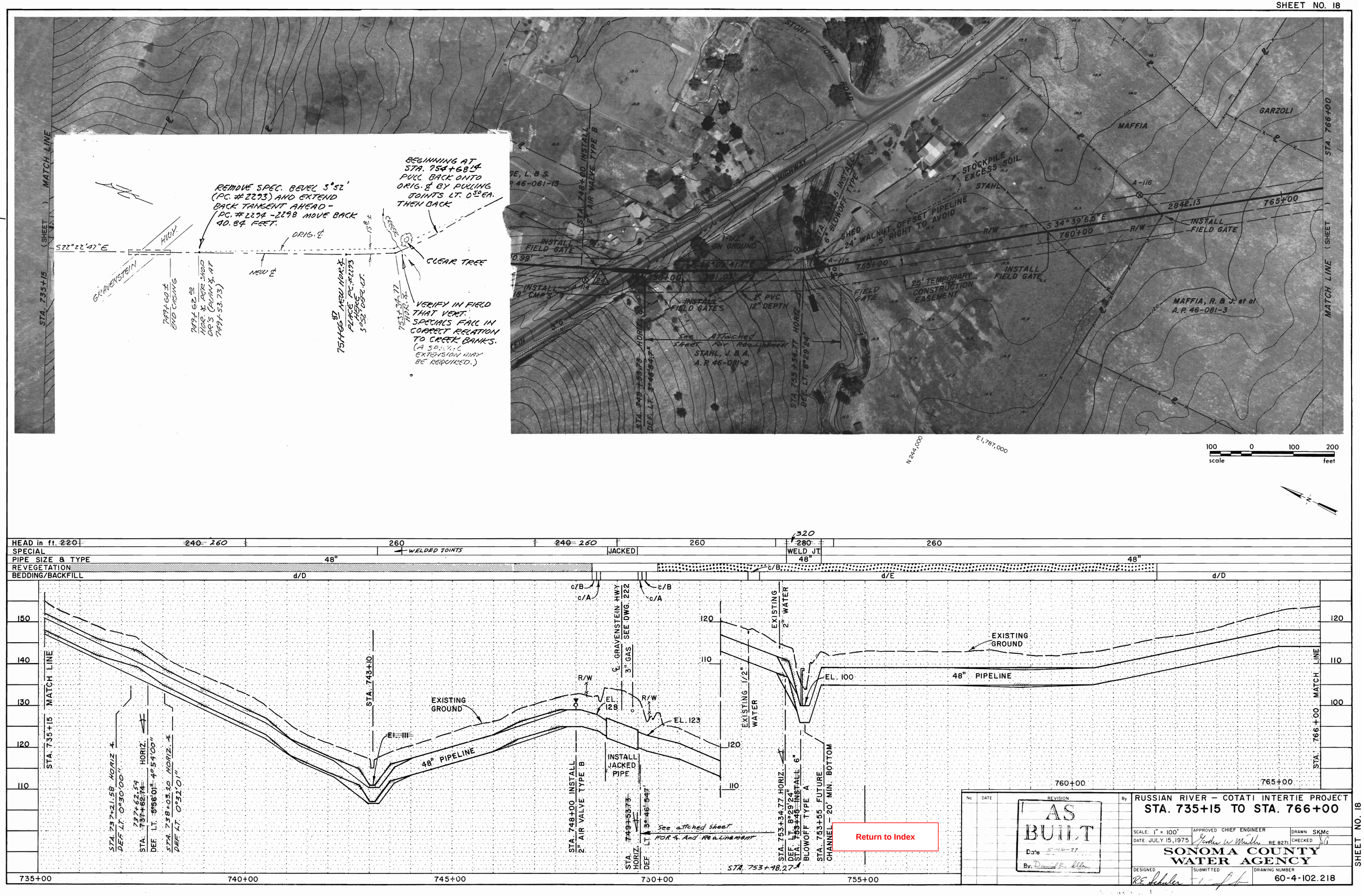

Return to Index

No.	DATE	REVISION	By
		AS BUILT Date 5-16-77 By: [signature]	

RUSSIAN RIVER – COTATI INTERTIE PROJECT

STA. 735+15 TO STA. 766+00

SCALE: 1" = 100'
DATE: JULY 15, 1975
APPROVED CHIEF ENGINEER [signature] RE 8271
DRAWN SKMc
CHECKED [signature]

SONOMA COUNTY WATER AGENCY

DESIGNED R.E. Schuler
SUBMITTED [signature]
DRAWING NUMBER 60-4-102.218

SHEET NO. 18

Return to Index

No	DATE	REVISION	By

RUSSIAN RIVER – COTATI INTERTIE PROJECT
STA. 766+00 TO STA. 783+90

SCALE: 1" = 100'
DATE: JULY 15, 1975
APPROVED CHIEF ENGINEER RE 6271
DRAWN SKMc
CHECKED

SONOMA COUNTY WATER AGENCY

DESIGNED R.E. Schuler
SUBMITTED
DRAWING NUMBER 60-4-102.219

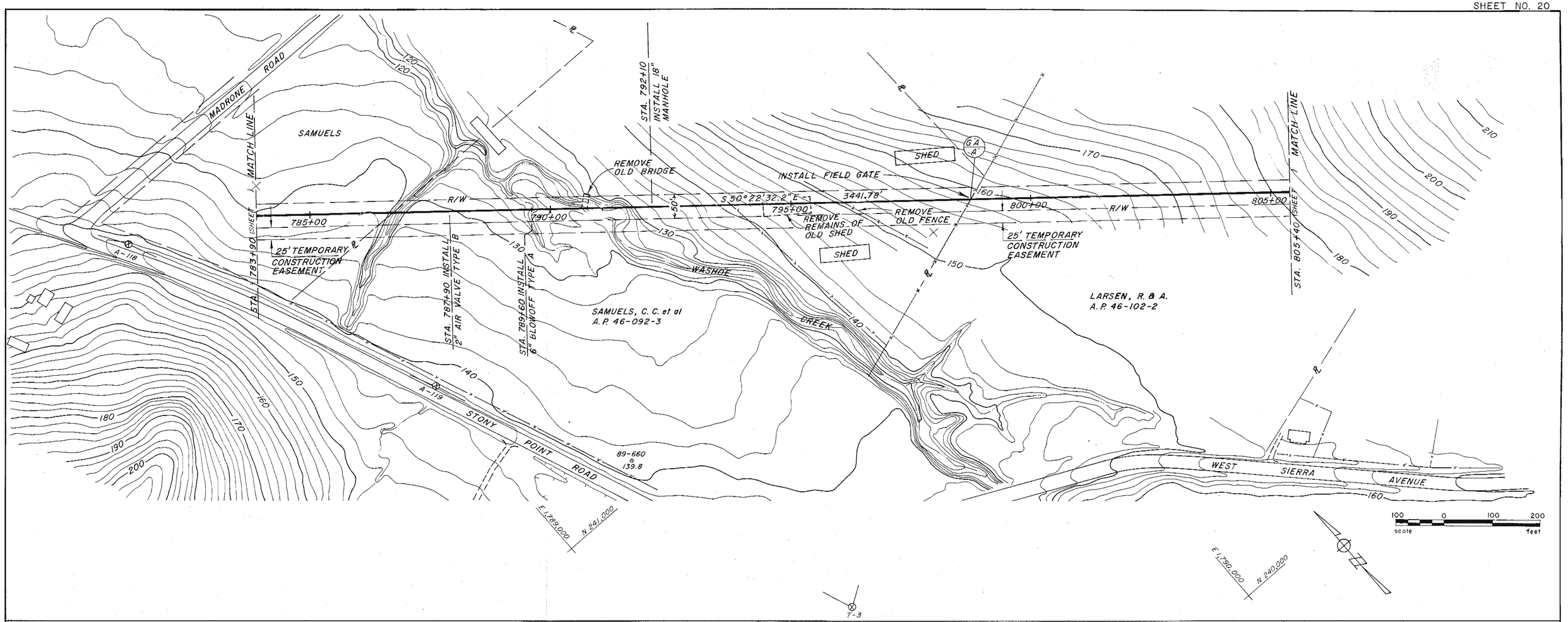

HEAD in ft.	~~240~~ 260	~~220~~ 260	~~200~~ 260	~~180~~ 260
SPECIAL	WELD JOINTS			
PIPE SIZE & TYPE	48"	48"		
REVEGETATION				
BEDDING/BACKFILL	d/D			

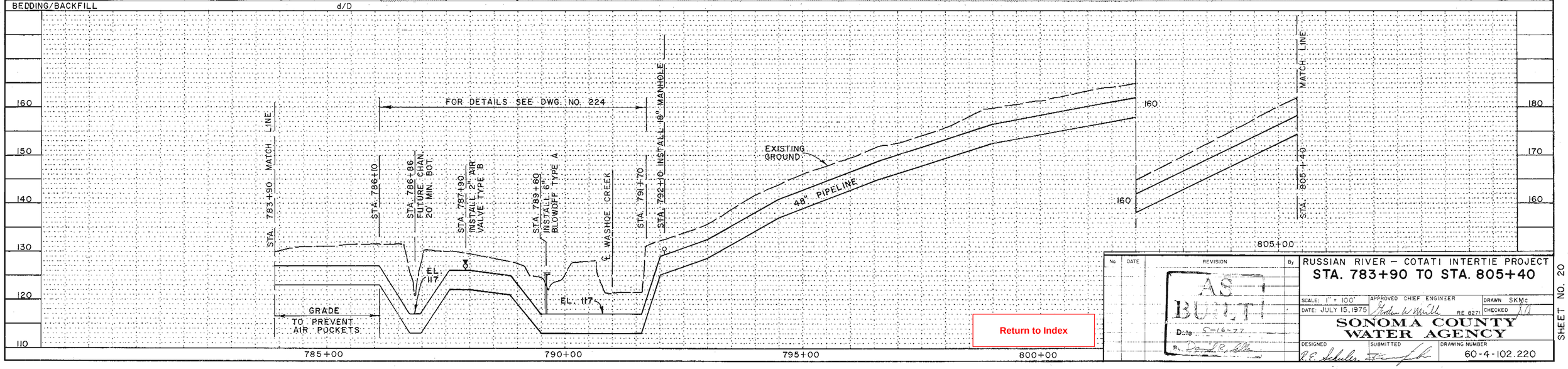

No.	DATE	REVISION	By
		AS BUILT Date 5-16-77 By	

RUSSIAN RIVER – COTATI INTERTIE PROJECT

STA. 783+90 TO STA. 805+40

SCALE: 1" = 100' | APPROVED CHIEF ENGINEER | DRAWN SKMc

DATE: JULY 15, 1975 | RE 8271 | CHECKED

SONOMA COUNTY WATER AGENCY

DESIGNED | SUBMITTED | DRAWING NUMBER 60-4-102.220

Return to Index

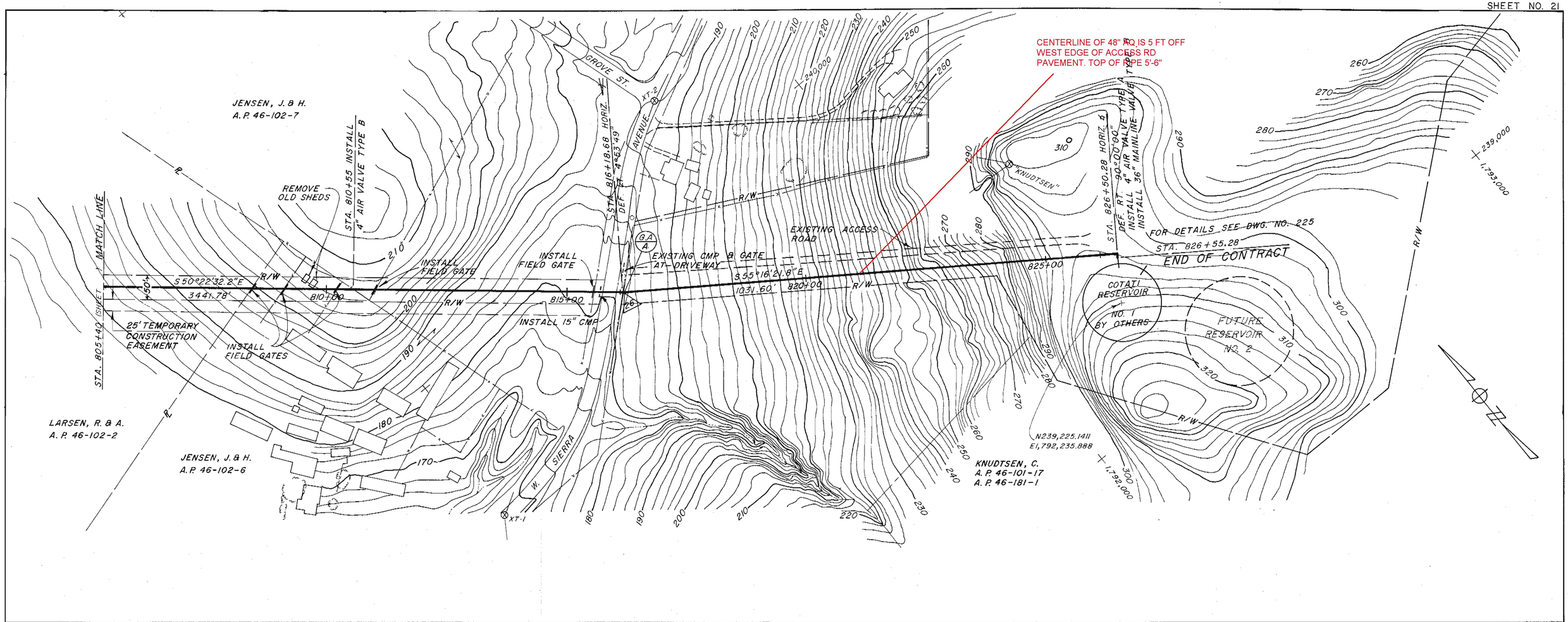

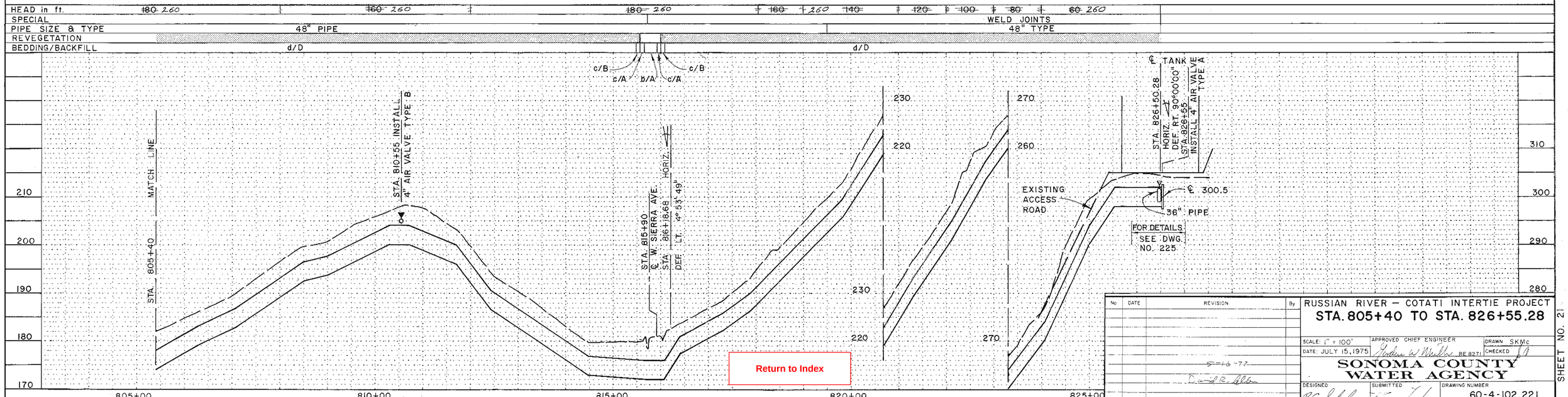

No	DATE	REVISION	By
		5-16-77	

RUSSIAN RIVER – COTATI INTERTIE PROJECT

STA. 805+40 TO STA. 826+55.28

SCALE: 1" = 100'

DATE: JULY 15, 1975

APPROVED CHIEF ENGINEER

RE 8271

DRAWN SKMc

CHECKED

SONOMA COUNTY WATER AGENCY

DESIGNED

SUBMITTED

DRAWING NUMBER 60-4-102.221

Return to Index

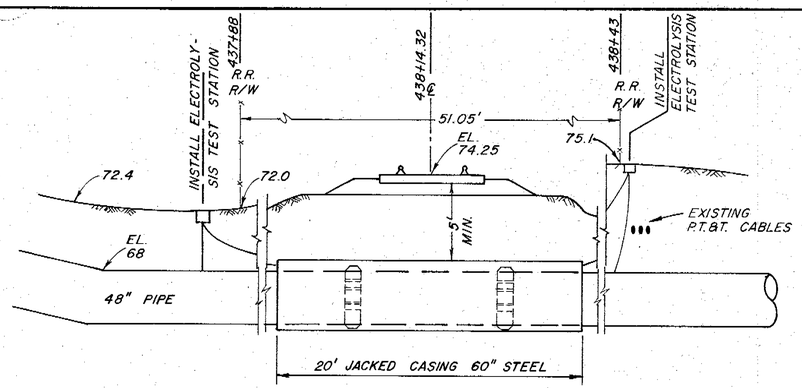

STA. 438+25.3 ±
RAILROAD CROSSING
PETALUMA & SANTA ROSA NORTHWESTERN PACIFIC

NOT TO SCALE

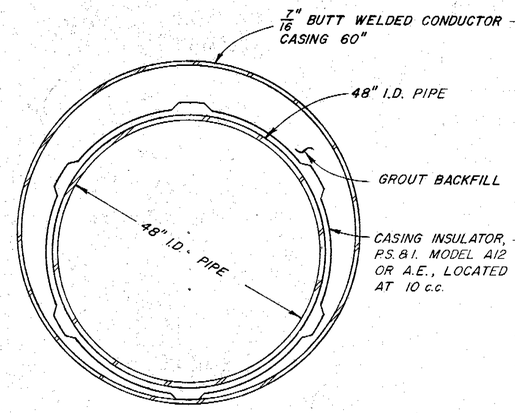

SECTION A–A

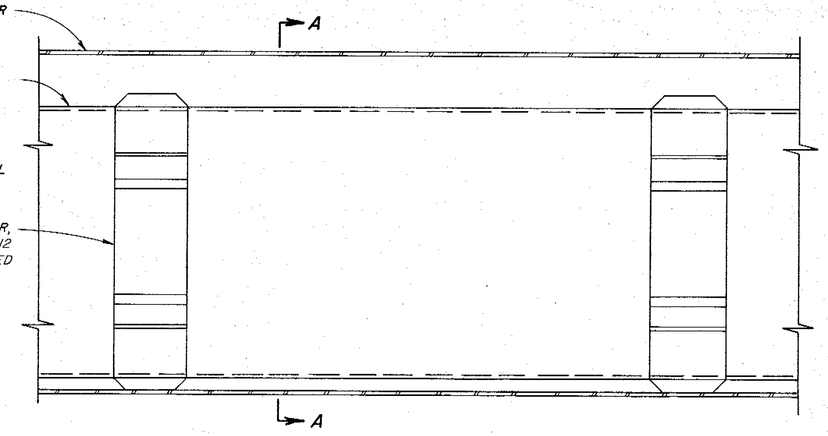

TYPICAL STEEL ENCASEMENT DETAIL

NO SCALE

NOTE: ALL JOINTS OF PIPELINE WITHIN CASING SHALL BE WELDED.

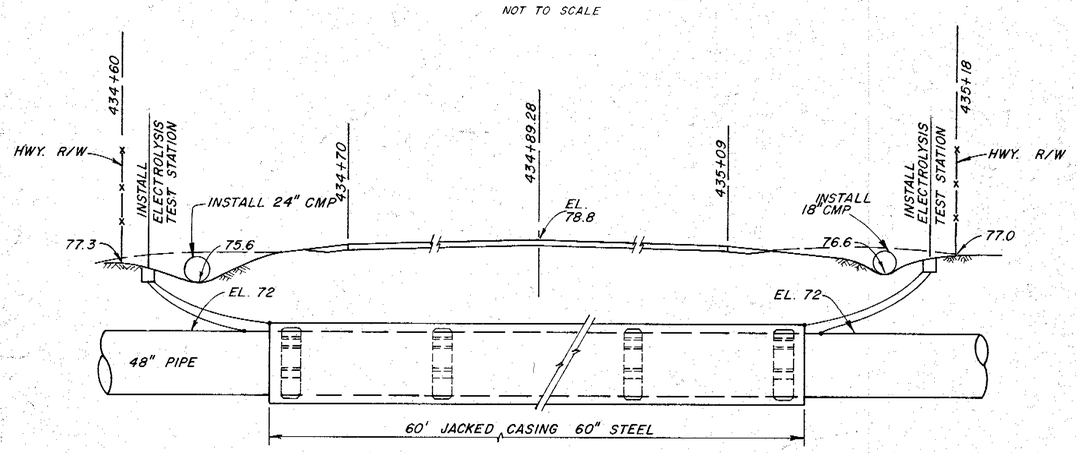

STA. 434+93.3 ±
HIGHWAY CROSSING
SEBASTOPOL ROAD

NOT TO SCALE

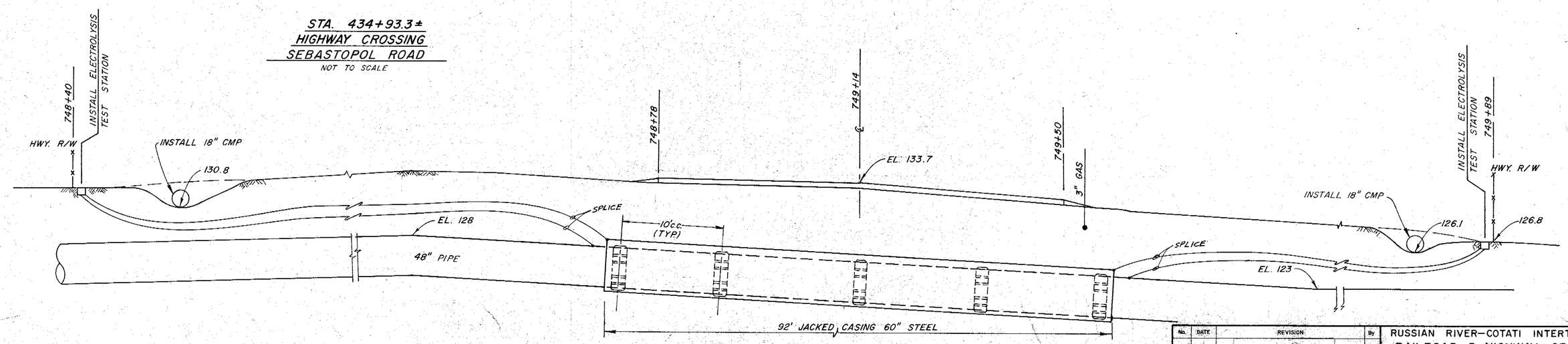

STA. 749+21.3 ±
HIGHWAY CROSSING
GRAVENSTEIN HIGHWAY

NOT TO SCALE

Return to Index

No.	DATE	REVISION	By
		5-16-77	

RUSSIAN RIVER–COTATI INTERTIE PROJECT
RAILROAD & HIGHWAY CROSSINGS

SCALE: NONE | APPROVED CHIEF ENGINEER | DRAWN
DATE: JULY 15, 1975 | RE 8271 | CHECKED

SONOMA COUNTY WATER AGENCY

DESIGNED | SUBMITTED | DRAWING NUMBER
60-4-102.222

MICROFILMED

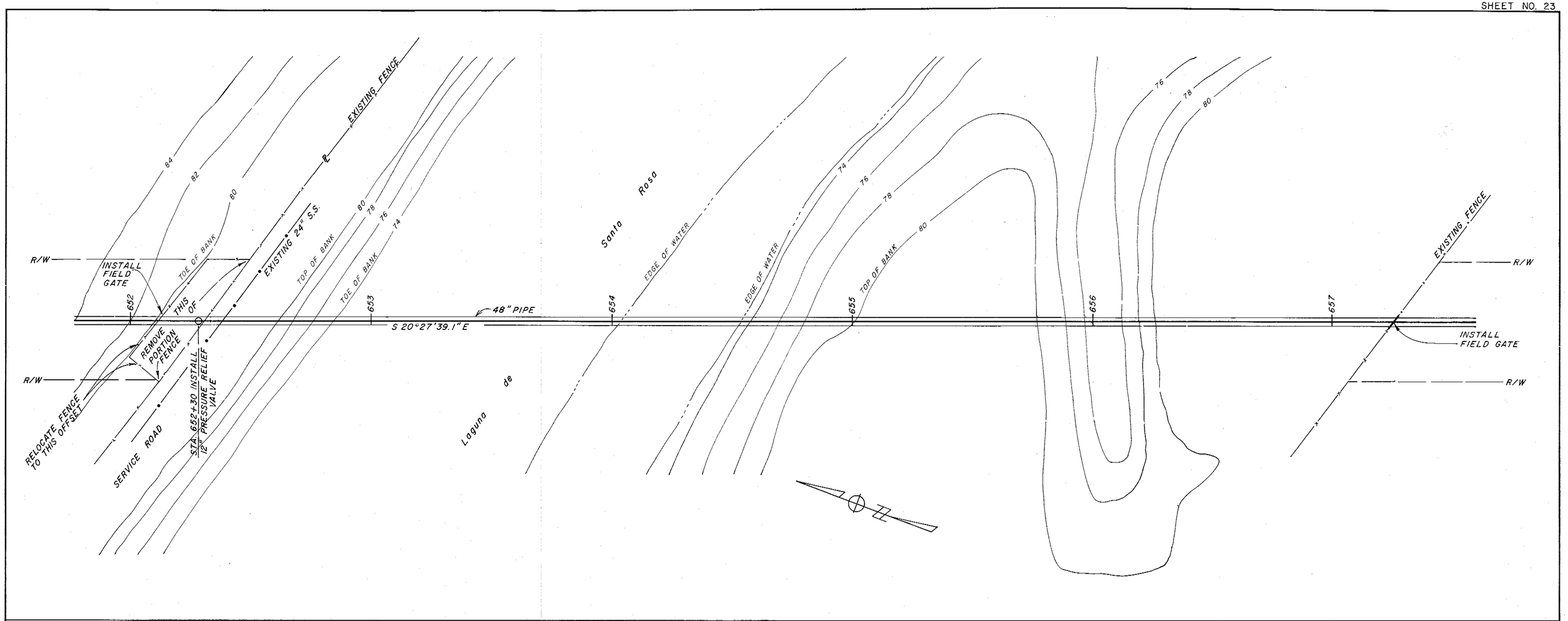

HEAD in ft.	320	340	320
SPECIAL	WELD JOINTS		
PIPE SIZE & TYPE	48"	48"	
BEDDING/BACKFILL	a/B	b/BACKFILL COMPACTED TO 85%	

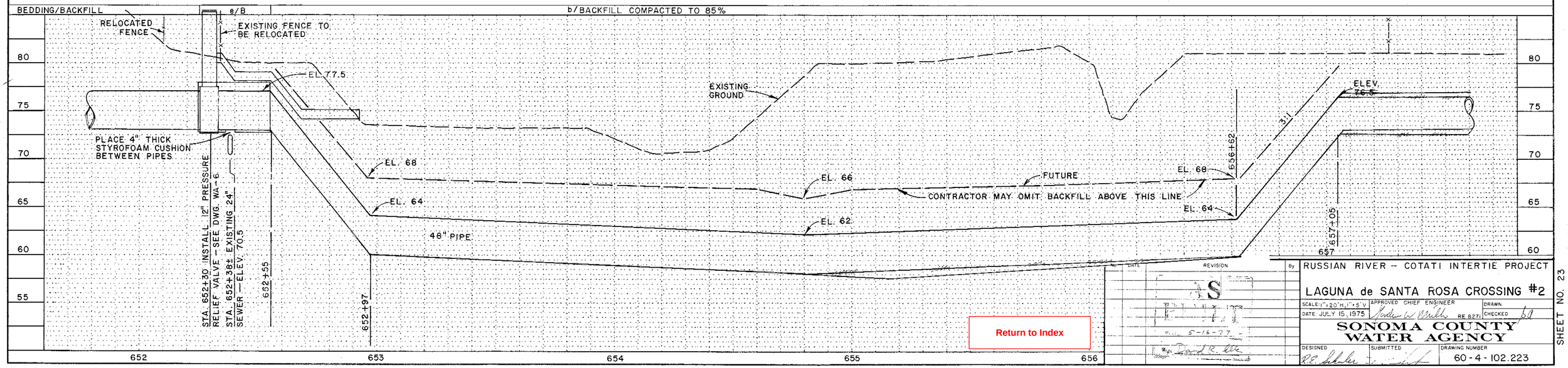

DATE	REVISION	By
5-16-77		

RUSSIAN RIVER – COTATI INTERTIE PROJECT

LAGUNA de SANTA ROSA CROSSING #2

SCALE: 1" = 20' H, 1" = 5' V

DATE JULY 15, 1975

APPROVED CHIEF ENGINEER RE 8271

DRAWN

CHECKED

SONOMA COUNTY WATER AGENCY

DESIGNED R.E. Schuler

SUBMITTED

DRAWING NUMBER 60-4-102.223

Return to Index

SHEET NO. 23

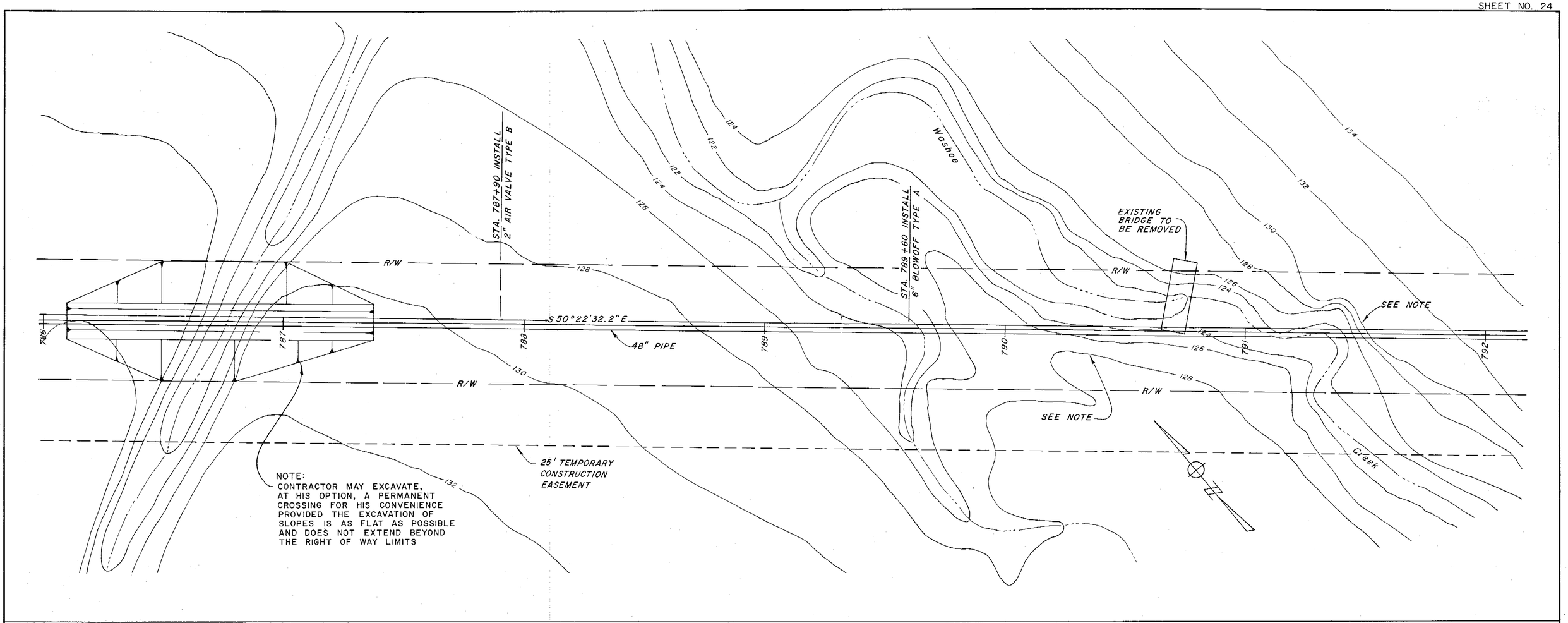

HEAD in ft.		
SPECIAL	WELD JOINTS	240 WELD JOINTS
PIPE SIZE & TYPE	48"	48"
BEDDING/BACKFILL		

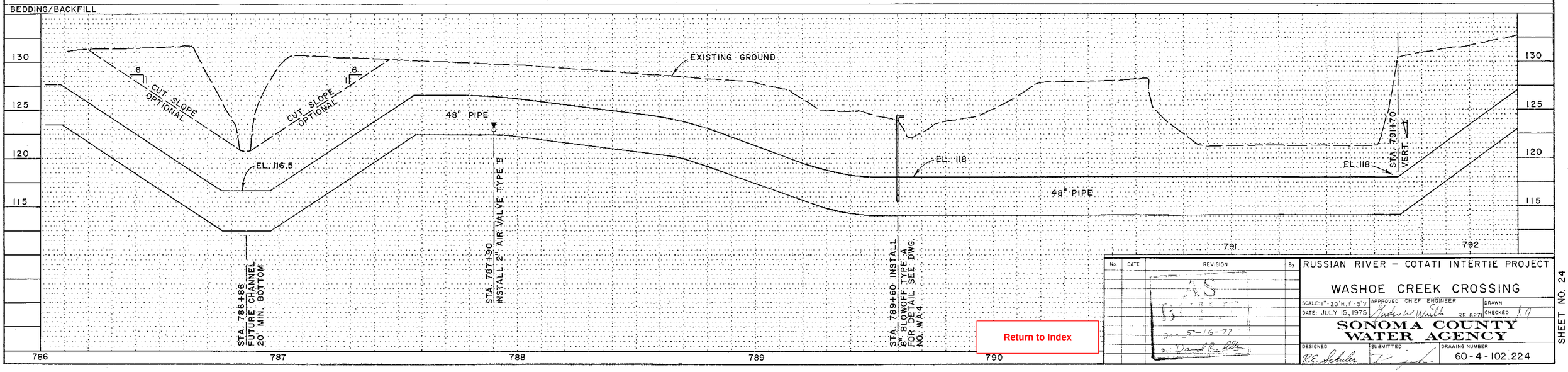

Return to Index

No.	DATE	REVISION	By
		5-16-77	

RUSSIAN RIVER – COTATI INTERTIE PROJECT

WASHOE CREEK CROSSING

SCALE: 1" = 20' H, 1" = 5' V
DATE: JULY 15, 1975
APPROVED CHIEF ENGINEER
RE 827
DRAWN
CHECKED

SONOMA COUNTY WATER AGENCY

DESIGNED R.E. Schuler
SUBMITTED
DRAWING NUMBER 60-4-102.224

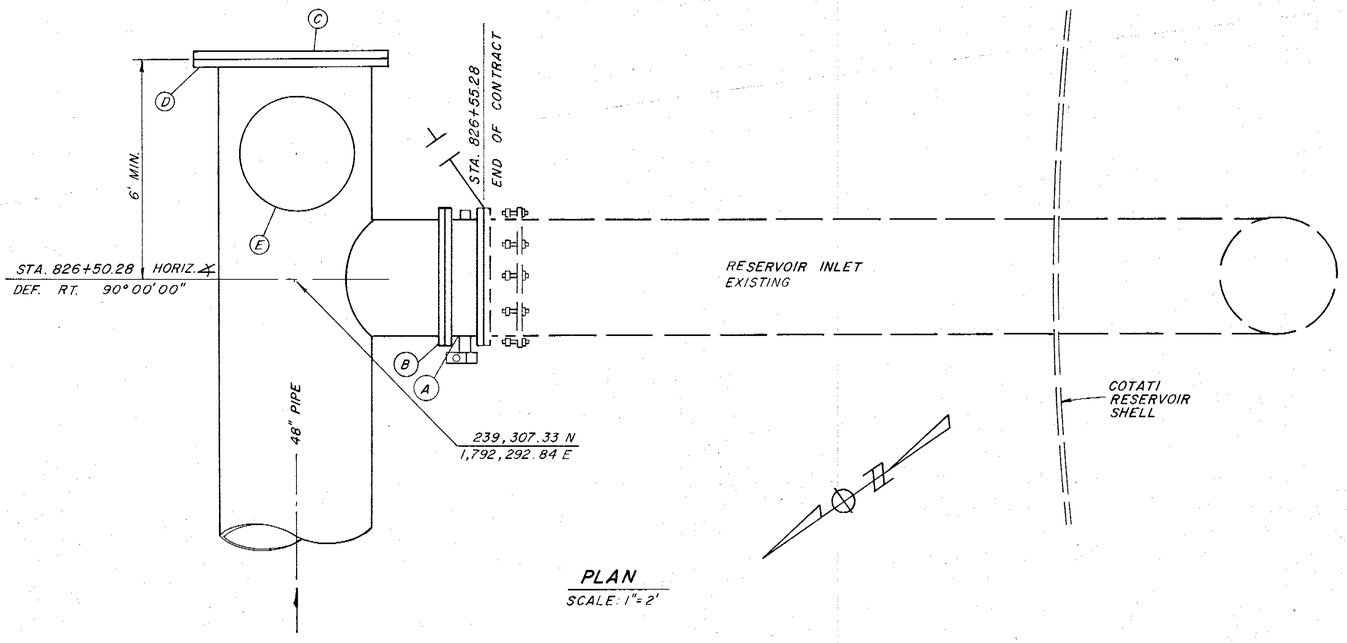

PLAN
SCALE: 1"=2'

NO.	ITEM
A	36" BUTTERFLY VALVE WITH OPERATOR, FLANGED, RUBBER SEAT, SHORT BODY
B	36" S.O. FLANGE
C	48" BLIND FLANGE
D	48" S.O. FLANGE
E	4" AIR VALVE ASSEMBLY, TYPE A
F	TRAFFIC VALVE BOX WITH CAST IRON COVER. BROOKS 3RT 8" ACP OR 12" BROOKS EXTENSIONS, OR A.E.

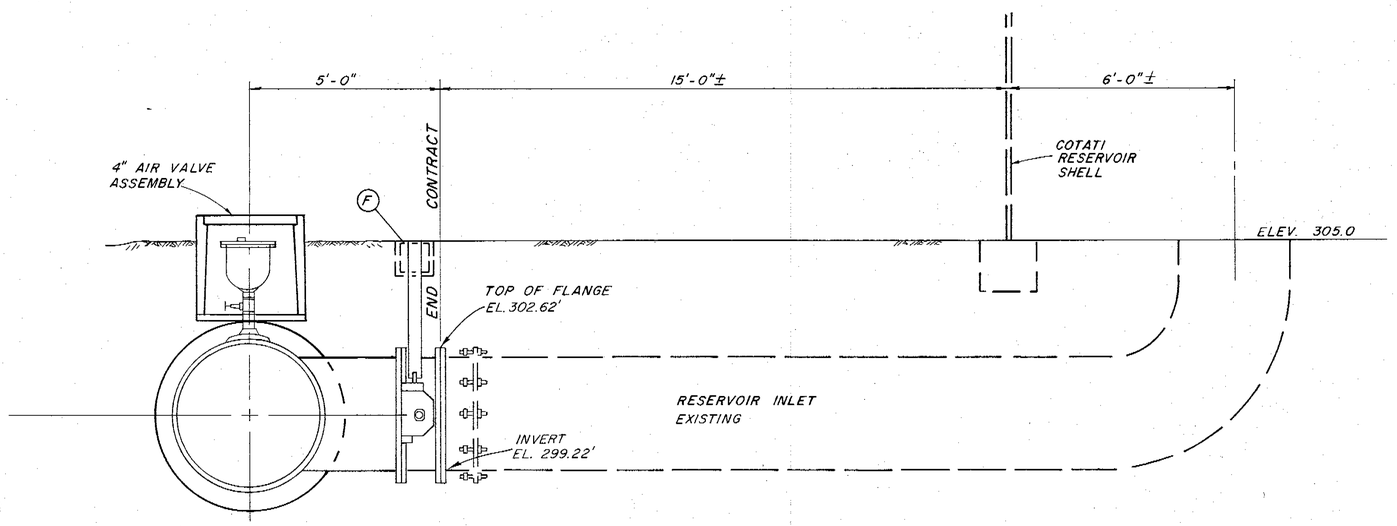

ELEVATION
SCALE: 1"=2'

Return to Index

No.	DATE	REVISION	By
		5-16-77	
		David R. Allen	

RUSSIAN RIVER – COTATI INTERTIE PROJECT
COTATI RESERVOIR CONNECTION

SCALE: AS SHOWN
DATE: JULY 15, 1975
APPROVED CHIEF ENGINEER: Gordon W. Mills RE 8271
DRAWN
CHECKED

SONOMA COUNTY WATER AGENCY

DESIGNED: R.E. Schuler
SUBMITTED
DRAWING NUMBER: 60-4-102.225

SHEET NO. 25 PH 27-4B

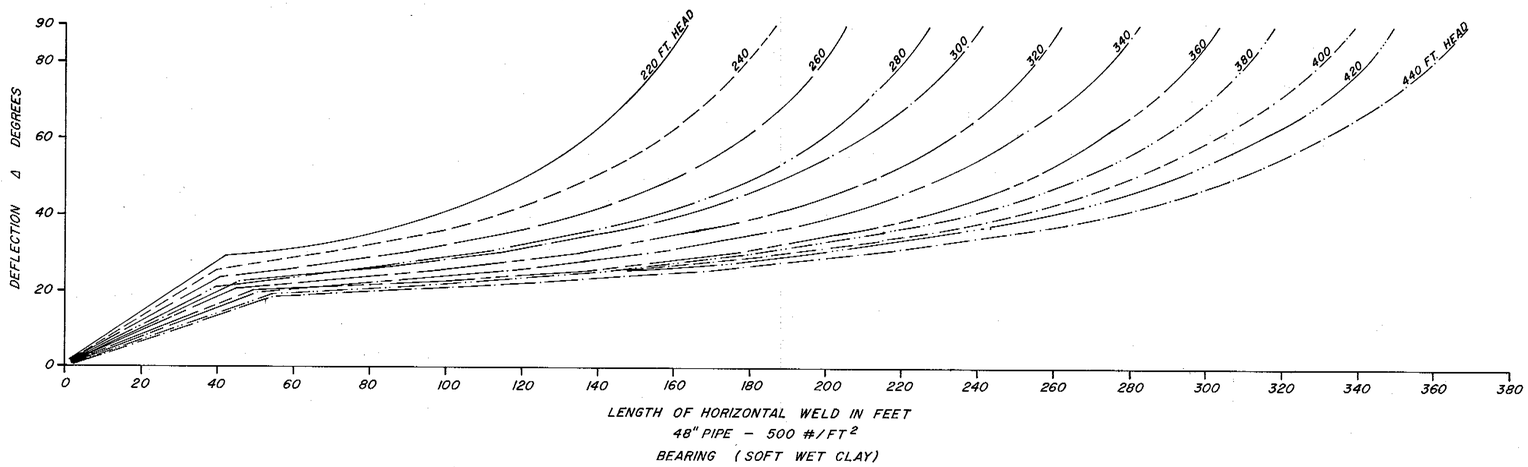

IN LAGUNA de SANTA ROSA
STA. 652+00 TO 658+00

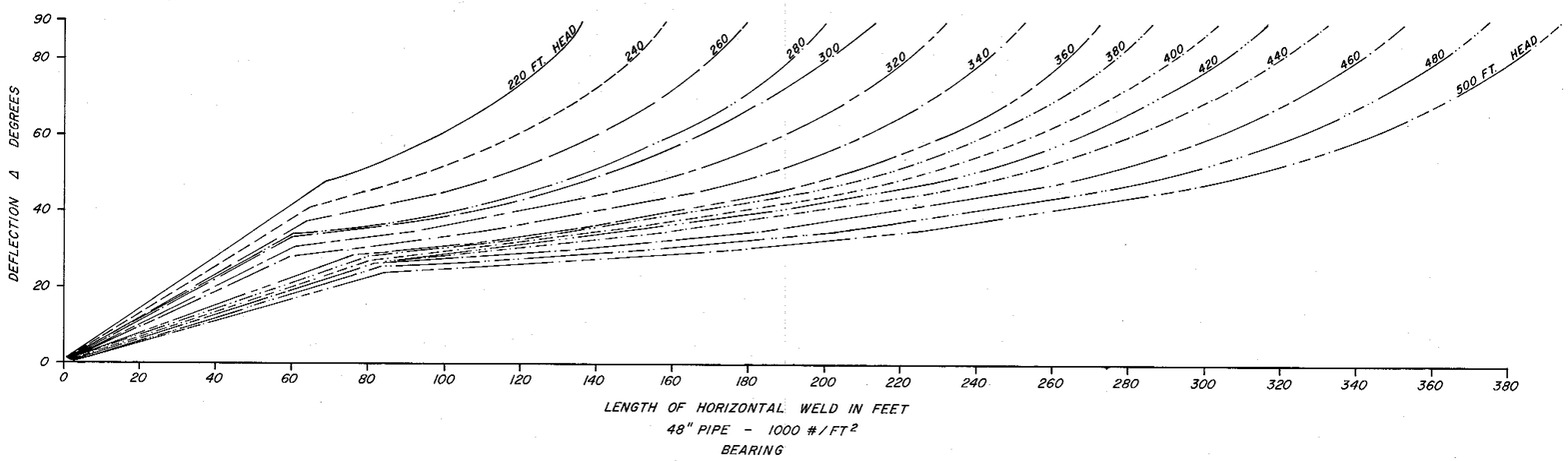

GENERAL

NOTES

1. ALL HORIZONTAL AND VERTICAL BENDS GREATER THAN 5° SHALL BE TREATED AS TENSION JOINTS AND SHALL BE WELDED IN EACH DIRECTION FROM P.I. FOR THE DISTANCE DENOTED ON THIS DRAWING.
2. ALL WELDED JOINTS SHALL HAVE FULL FILLET WELDS.

Return to Index

No.	DATE	REVISION	By
		AS BUILT 5-16-77	

RUSSIAN RIVER-COTATI INTERTIE PROJECT
WELD LENGTH FOR
THRUST ON PIPE BENDS

SCALE: NONE | APPROVED CHIEF ENGINEER | DRAWN
DATE: JULY 15, 1975 | RE 8271 | CHECKED

SONOMA COUNTY
WATER AGENCY

DESIGNED | SUBMITTED | DRAWING NUMBER
60-4-102.226

STRIP SITE FOR PIPELINE BEDDING MATERIAL - SEE DWG. NO.

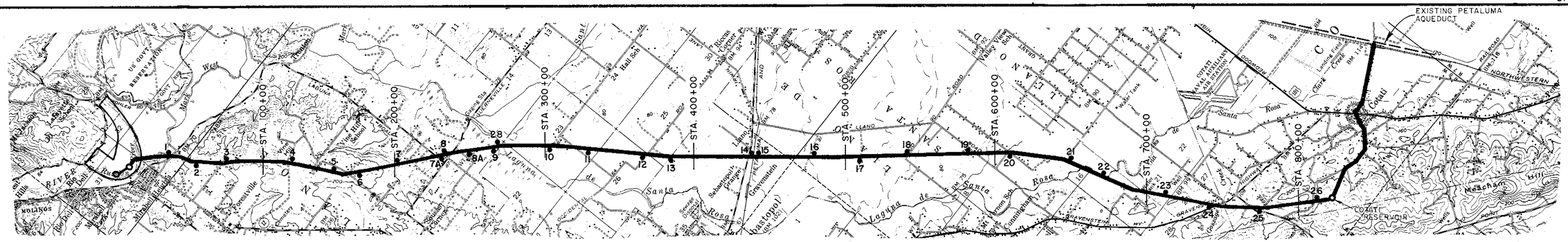

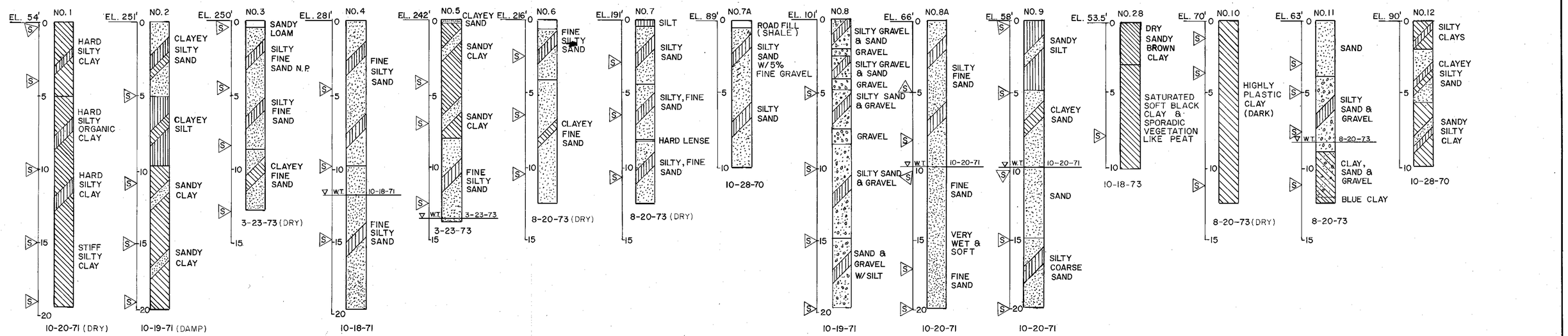

LEGEND

- INDICATES DEPTH SAMPLE TAKEN
- SILT
- CLAY
- SAND
- GRAVEL
- LOAM
- CLAYEY SILT
- SANDY SILT
- SANDY CLAY
- CLAYEY SAND
- CLAY & SAND
- SILTY GRAVEL & SAND
- CLAYEY GRAVEL
- GRAVELLY CLAY
- GRAVELLY SAND
- SAND GRAVEL & CLAY
- SILTY CLAY
- SILTY SAND

NOTE: SAMPLES TAKEN BY POWER FLIGHT AUGER AND CLASSIFIED BY OBSERVATION EXCEPT HOLES NO. 3, 4, 5, 7A & 12 WHICH WERE CLASSIFIED BY LABORATORY GRADATION ANALYSIS. SAMPLES FROM C-1 & B-1 WERE TAKEN BY SPLIT SPOON SAMPLER, AND CLASSIFIED BY FIELD OBSERVATION. HOLE 28 EXCAVATED BY BACKHOE.

Return to Index

No.	DATE	REVISION	By

RUSSIAN RIVER-COTATI INTERTIE PROJECT
PIPELINE
LOG OF BORINGS

SCALE: NO SCALE | APPROVED CHIEF ENGINEER | DRAWN
DATE: JULY 15, 1975 | RE 8271 | CHECKED

SONOMA COUNTY WATER AGENCY

DESIGNED | SUBMITTED | DRAWING NUMBER 60-4-102.227

SHEET NO. 27

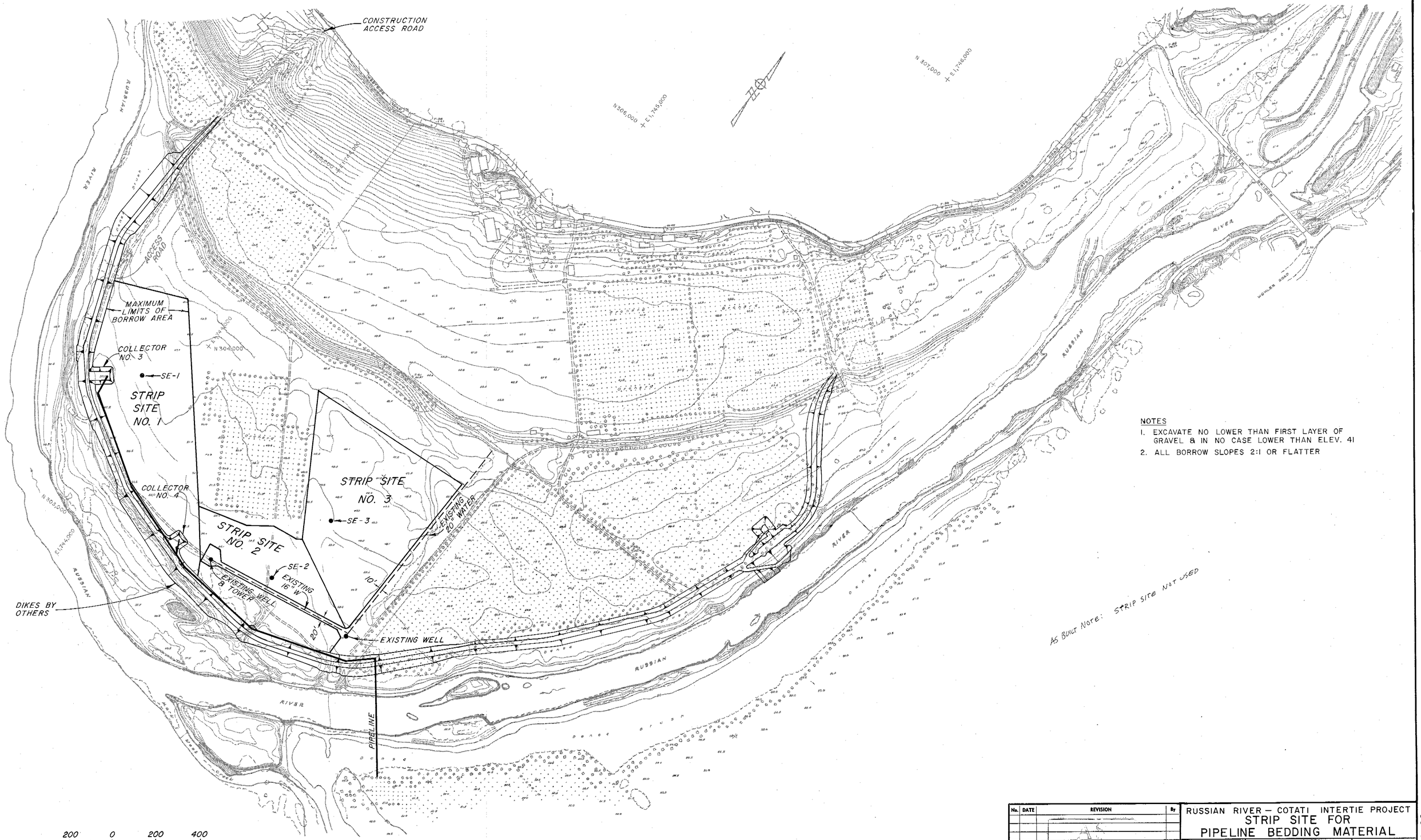

No.	DATE	REVISION	By
		AS BUILT 5-16-77	

RUSSIAN RIVER — COTATI INTERTIE PROJECT

STRIP SITE FOR PIPELINE BEDDING MATERIAL

SCALE: 1" = 200'
DATE: JULY 15, 1975
APPROVED CHIEF ENGINEER RE 827:
DRAWN
CHECKED

SONOMA COUNTY WATER AGENCY

DESIGNED
SUBMITTED
DRAWING NUMBER 60-4-102.228

SHEET NO. 28

Return to Index

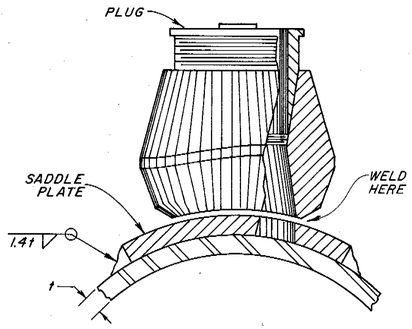

THREDOLET
NO SCALE

NOTE: PLACE THREDOLET BELOW TOP OF PIPE BUT ABOVE SPRINGLINE.

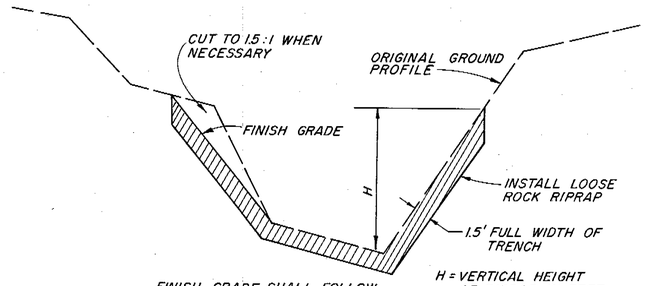

STATIONS	H
743+10	2'
753+55	7'
786+86	6'
791+00	7'

FINISH GRADE SHALL FOLLOW EXISTING GROUND PROFILE EXCEPT SHALL NOT EXCEED 1.5 HORIZONTAL TO 1.0 VERTICAL.
INSTALL RIPRAP AT STATIONS SHOWN IN TABLE.

LOOSE ROCK RIPRAP
NO SCALE

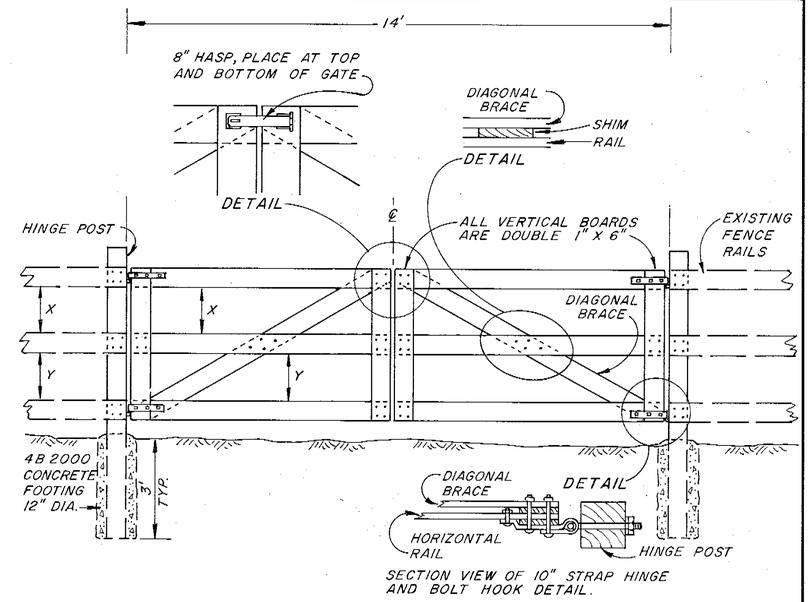

NOTES
1. GATE FRAME SHALL BE 1" X 6", DOUGLAS FIR, S4S.
2. GATE HINGE POST SHALL BE 6" X 6" X 8" REDWOOD ALL HEART.
3. ALL WOOD SHALL BE PAINTED WHITE.

DOUBLE WOOD GATE
NO SCALE

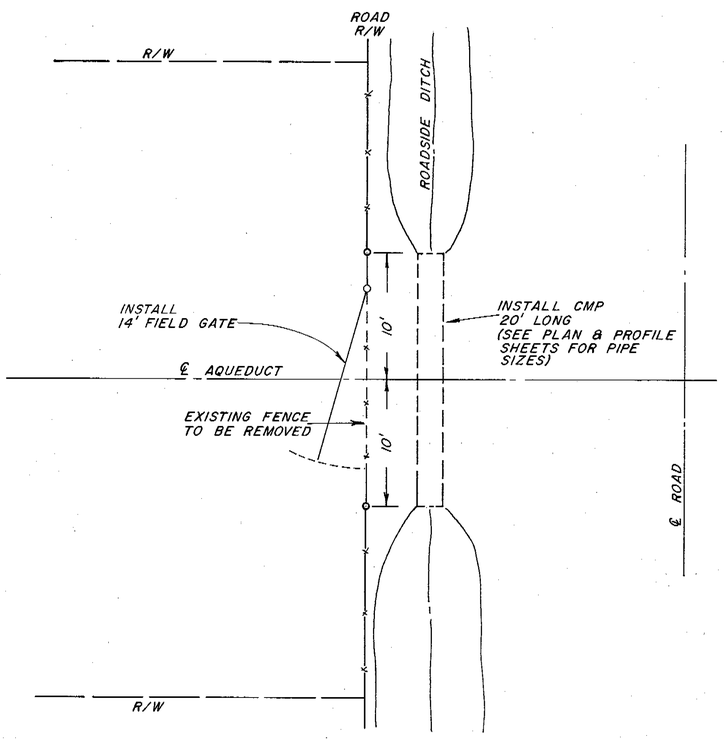

PLAN
GATE & CMP LOCATION
SCALE 1" = 6'

CC 18

BLACK ON ORANGE
72" x 72" 8" LETTERS

CC 16

BLACK ON ORANGE
48" x 48" 7" LETTERS

CC 9

BLACK ON ORANGE
48" x 48" 7" LETTERS

NOTE:
ALL SIGNS SHALL MEET STATE OF CALIF. STANDARDS, MOUNTED ON POSTS, AND PLACED ON EDGE OF ROAD AT THE DISTANCES SHOWN IN ( ) FROM TRENCH.

SANFORD ROAD - CC18 (700'±) CC16 (500'±) CC9 (200'±)
OCCIDENTAL ROAD - CC18 (700'±) CC16 (500'±) CC9 (200'±)
SEBASTOPOL ROAD - JACKED
TODD ROAD - CC18 (700'±) CC16 (500'±) CC9 (200'±)
LLANO ROAD - CC18 (700'±) CC16 (500'±) CC9 (200'±)
MEADOW LANE - CC18 BOTH SIDES OF TRENCH
WALKER AVE. - CC18 BOTH SIDES OF TRENCH
GRAVENSTEIN HWY. - JACKED
STONY POINT ROAD - EXISTING CASING
MADRONE ROAD - CC18 (700'±) CC16 (500'±) CC9 (200'±) CC18 ONLY, WEST SIDE
WEST SIERRA AVE. - CC18 (700'±) CC16 (500'±) CC9 (200'±)

BASIC SIGNING FOR OUTSIDE PROJECT LIMITS

Return to Index

No.	DATE	REVISION	By
		AS BUILT Date 5-16-77 By:	

RUSSIAN RIVER — COTATI INTERTIE PROJECT

MISCELLANEOUS DETAILS

SCALE: AS SHOWN | APPROVED CHIEF ENGINEER | DRAWN
DATE: JULY 15, 1975 | RE 8271 | CHECKED

SONOMA COUNTY WATER AGENCY

DESIGNED | SUBMITTED | DRAWING NUMBER 60-4-102.229

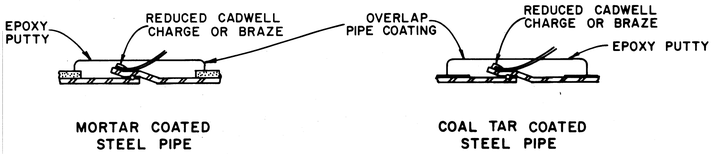

CONNECTION DETAILS

ALTERNATE TO CALDWELL PROCESS: CONNECT ANODE LEAD TO BONDING ROD WITH PENN UNION S-2 SPLIT BOLT CONNECTORS.

NOTES-CONNECTION DETAILS

1. WHERE POSSIBLE, SHIFT CONNECTION TO NEAREST PIPE JOINT. ALLOW 12" LOOP AS SLACK AT PIPE CONNECTION.
2. MIX EPOXY PUTTY (EPOXYBOND PLUMBER SEAL) AS DIRECTED & APPLY FIRMLY TO PROVIDE A WATER-TIGHT SEAL AT LEAST 1/4" THICK OVER PIPE COATING. OVERLAP COATING & WIRE INSULATION BY 1/2"

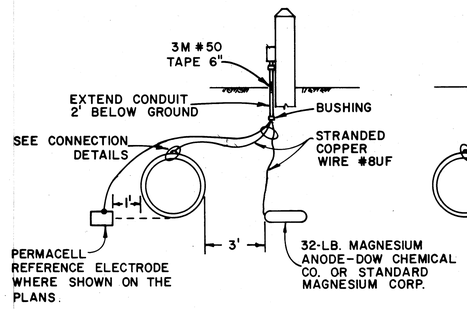

TYPE A GALVANIC ANODE WITH ELECTROLYSIS TEST LEAD INSTALLATION

NOTES-
1. CLEARANCE SHALL NOT BE LESS THAN 3'.
2. TERMINATE LEADS IN CONDUIT TEST OUTLET.
3. ANODE IS TO BE INSTALLED HORIZONTALLY AND SHALL BE LEVEL WITH THE INVERT OF THE PIPE.

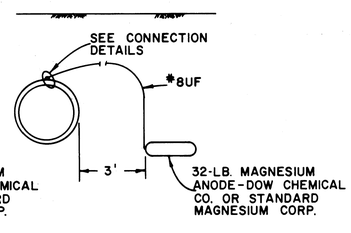

TYPE B GALVANIC ANODE WITHOUT TEST LEAD INSTALLATION

NOTES-
1. ALTERNATE CONNECTION IN RESTRICTED SURFACE ACCESS CONDITIONS

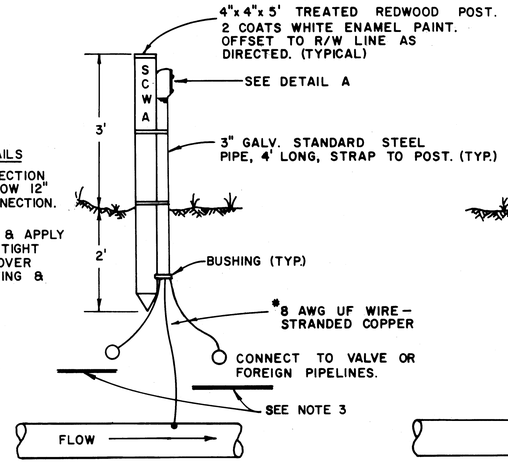

ONE POINT STATION TYPE A

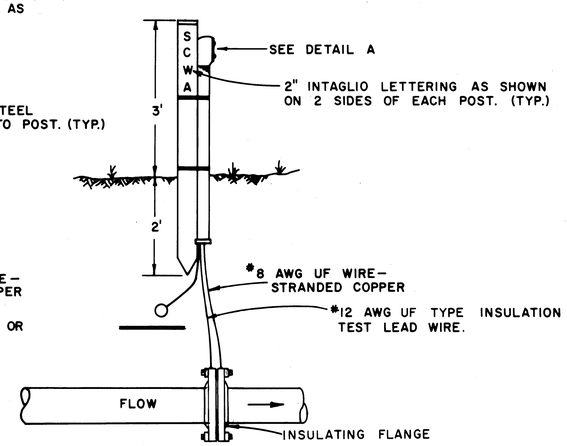

TWO POINT STATION TYPE A

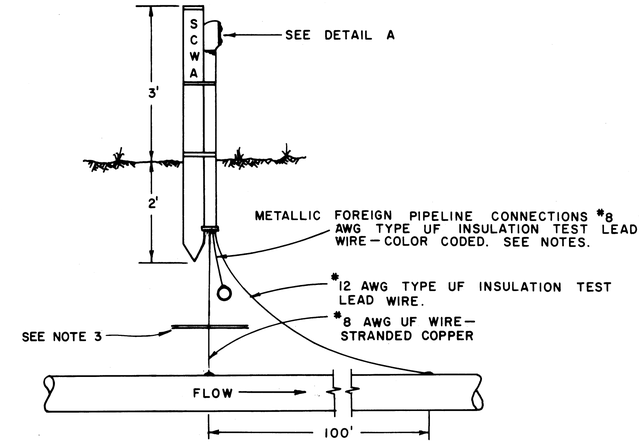

THREE POINT STATION TYPE A

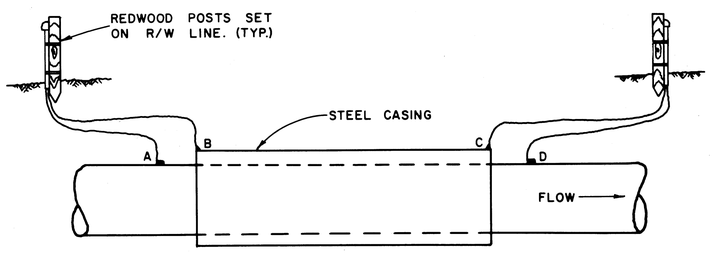

ENCASEMENT STATION

NOTE 1. A AND B-#12 AWG TYPE UF INSULATION TEST LEAD WIRE STRANDED COPPER.
2. C AND D-#8 AWG UF WIRE STRANDED COPPER
3. ENCASEMENT LEADS-YELLOW.

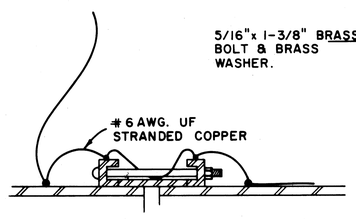

COUPLING BOND

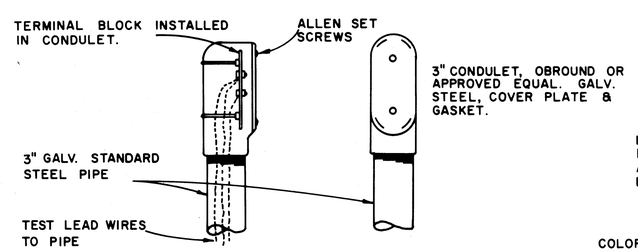

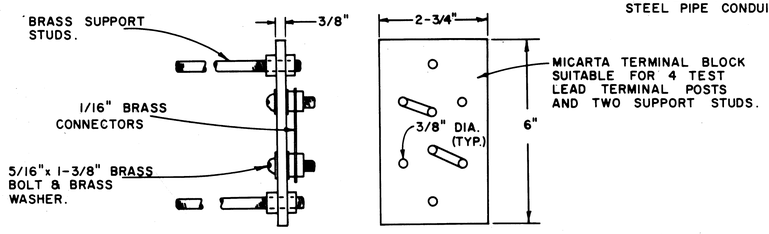

DETAIL A

NOTE: TEST STATION UNIT SHALL BE INSTALLED COMPLETE WITH MICARTA TERMINAL BLOCK, BRASS HARDWARE, CONDULET, COVER & RUBBER GASKET.

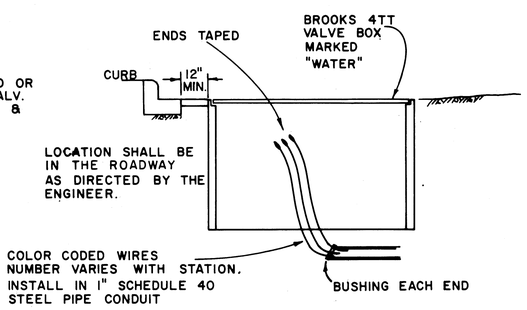

STREET INSTALLATION

NOTES:

1. COLOR CODE:

AQUEDUCT PIPELINE
WHITE - DOWNSTREAM
YELLOW-MIDPOINT OR ANODE
BLACK-UPSTREAM

FOREIGN PIPELINE CROSSINGS
BLUE - GAS
GREEN-WATER
RED-SEWER PRESSURE MAIN
ORANGE-UNIDENTIFIED PIPELINE

TERMINAL POST WASHERS
SHALL BE PAINTED SAME COLOR AS LEAD WIRES.

2. LEAD WIRES
LENGTH AND SIZE OF EACH WIRE SHALL BE MEASURED AND STAMPED ON A METAL TAG AFFIXED TO THE WIRE TERMINAL POST. WHERE UF WIRE IS NOT AVAILABLE IN COLORS, COLOR CODE SHALL BE INDICATED BY COLOR TAPE AT TERMINALS.

3. ~~WHEN~~ CLEARANCE BETWEEN FOREIGN PIPELINE IS LESS THAN 12", ~~INSERT SQUARE~~ SHEET OF ~~LAMINATED~~ PHENOLIC PLASTIC 1/4" ~~THICK WITH~~ LENGTHS EQUAL TO THE O.D. OF THE LARGER ~~PIPE OR 18" WHICH~~ EVER IS ~~LARGER,~~ INSTALL 32 LB. MAGNESIUM ~~ANODE~~ EACH SIDE OF AGENCY PIPELINE PER STREET INSTALL~~ATION~~ DETAIL. NOT NEEDED
4. NO TEST LEAD CONNECTIONS SHALL BE MADE TO METALLIC FOREIGN PIPELINES. DRAPE 3' OF EXTRA CABLE AT POINT OF CROSSING FOR CONNECTION BY OTHERS.
5. GALVANIC ANODE TYPE-A TO BE INSTALLED AT 2,000' INTERVALS.

Contract 2

Return to Index

No.	DATE	REVISION	By
		AS BUILT Date 5-16-77 By:	

RUSSIAN RIVER COTATI INTERTIE PROJECT
GALVANIC ANODES AND ELECTROLYSIS TEST STATIONS

SCALE: NONE | APPROVED CHIEF ENGINEER | DRAWN
DATE: JULY 15, 1975 | R.E. 8271 | CHECKED

SONOMA COUNTY WATER AGENCY

DESIGNED | SUBMITTED | DRAWING NUMBER WA-1

MICROFILMED

SHEET NO. 30 PH27-4B

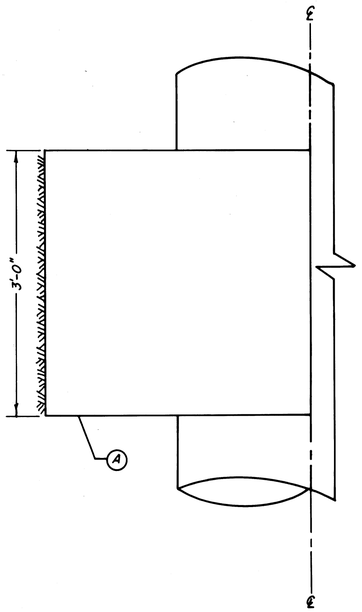

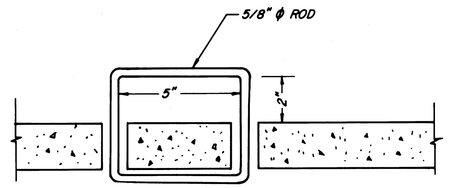

HANDLE DETAIL

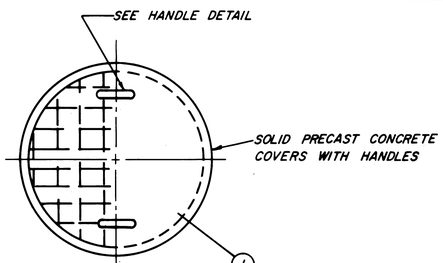

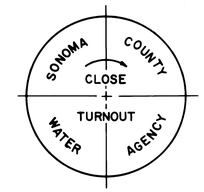

CAST IRON COVER

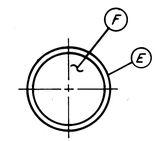

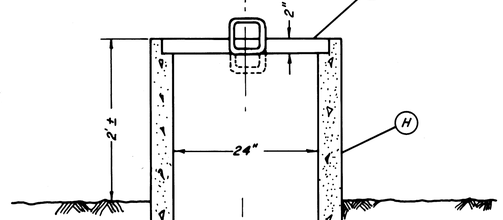

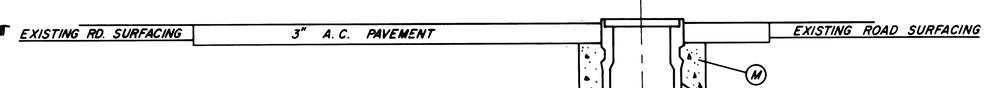

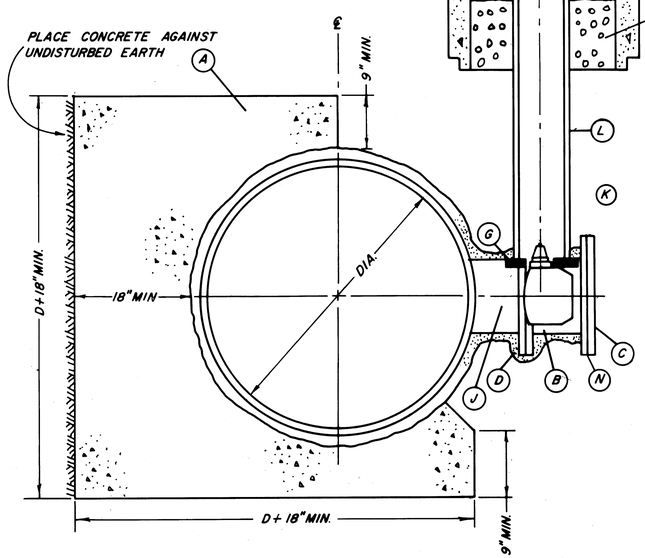

TURNOUT TYPE A

IN AGENCY RIGHT OF WAY

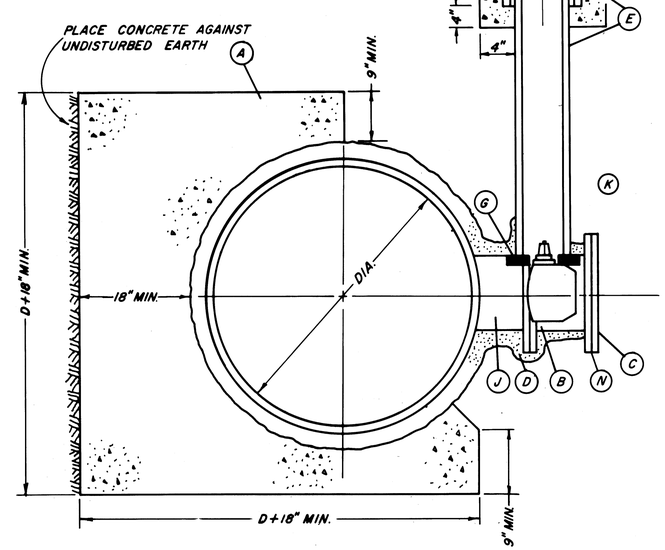

TURNOUT TYPE B

IN ROADWAYS

DISCRIPTIONS

A	CONCRETE THRUST BLOCK- CLASS 4B2000 - PLAIN CONCRETE
B	BUTTERFLY VALVE W/ OPERATOR, FLANGED, RUBBER SEAT, SHORT BODY.
C	BLIND FLANGE, PAINT FLANGE AND BOLTS AFTER INSTALLATION WITH COAL TAR EPOXY.
D	PAINT SURFACE WITH BITUMASTIC NO. 50, WRAP WITH 18 GAUGE STUCCO NETTING AND PLASTER WITH 1:3 MIX 1 1/2" THICK.
E	TRAFFIC VALVE BOX W/ CAST IRON COVER BROOKS 3RT 8" ACP OR 12" BROOKS EXTENSIONS, BROOKS PRODUCTS INC. OR APPROVED EQUAL.
F	CAST IRON COVER BROOKS 3RT WITH PRINTING AS SHOWN.
G	DOUBLE 2"X6"X12" REDWOOD BLOCKING NOTCHED TO RECEIVE VALVE STEM. PRECAST CONCRETE BASE 12"X12"X1 1/2" MAY BE SUBSTITUTED.
H	CONCRETE IRRIGATION PIPE 24"X4'0" GROOVE END UP FOR LID.
I	CONCRETE PRECAST LID WITH TWO HANDLES 5/8"Ø REINFORCED WITH 6"X6"X10GA. MESH WITH 1/4"Ø ROD AROUND LID EDGE. PRINTING AS SHOWN.
J	TURNOUT TEE TO BE FABRICATED BY PIPE MANUFACTURER. LOCATE 8" MIN. FROM RUBBER GASKET JOINT. COATING SAME AS PIPELINE COATING.
K	SAND BACKFILL TO 12" OVER TOP OF VALVE. CONTINUE BACKFILL AND COMPACTION AS REQUIRED FOR LOCATION
L	8" ACP OR 12" BROOKS EXTENSIONS OR APPROVED EQUAL.
M	CONCRETE PAD CLASS 4B 2000
N	2-POINT TEST STATION REQUIRED WITH INSULATION GASKET. NOT REQUIRED FOR BLIND FLANGE INSTALLATIONS.

NOTES:

1. PRESSURE RATINGS OF EQUIPMENT SHOWN SHALL BE NO LESS THAN THE WORKING PRESSURE (IN FEET OF HEAD) INDICATED ON THE PROFILE DRAWINGS.

contract 2

No.	Date	REVISION	By
		AS BUILT Date 5-16-77 By:	

RUSSIAN RIVER—COTATI INTERTIE PROJECT

DISTRIBUTION TURNOUTS TYPE A AND TYPE B

SCALE: NONE | APPROVED CHIEF ENGINEER | DRAWN

DATE: JULY 15, 1975 | R.E. 8271 | CHECKED

SONOMA COUNTY WATER AGENCY

DESIGNED | SUBMITTED | DRAWING NUMBER WA-2

SHEET NO. 31

PH 87-48

Return to Index

MICROFILMED

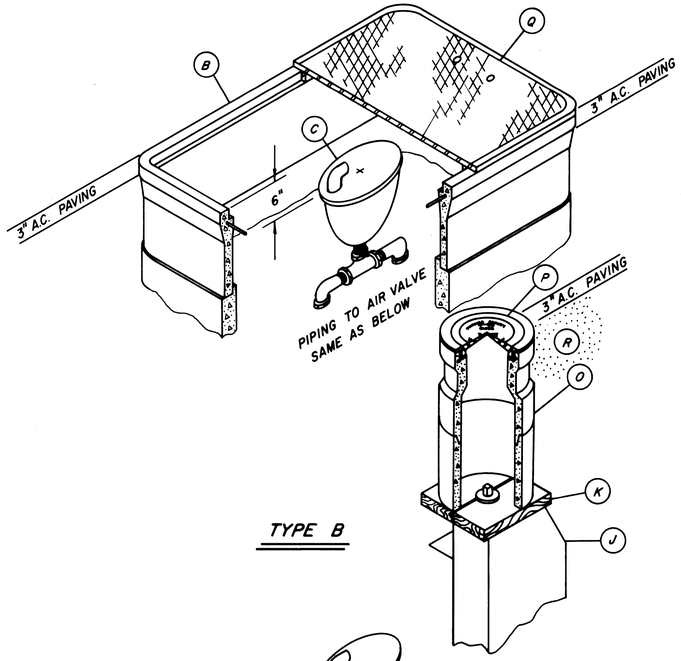

TYPE B

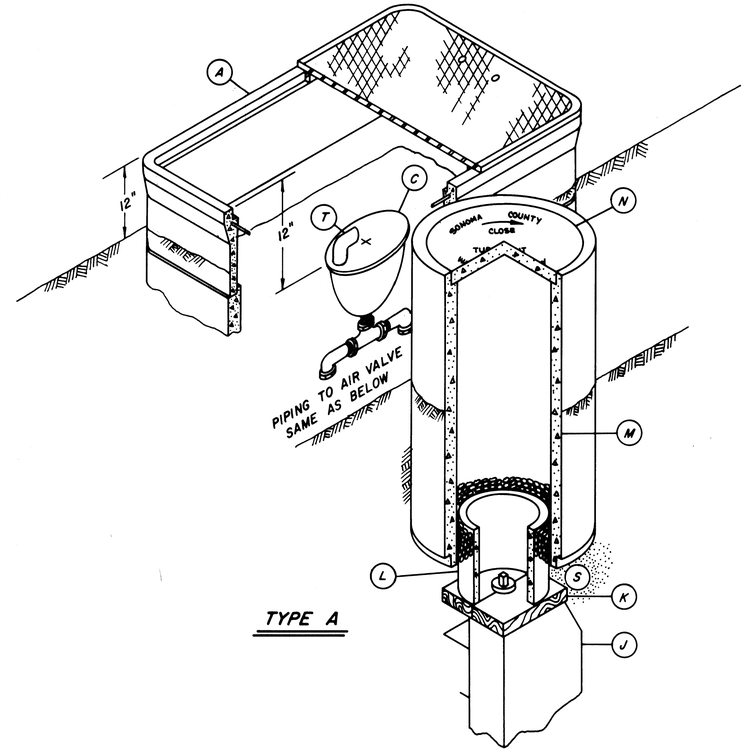

TYPE A

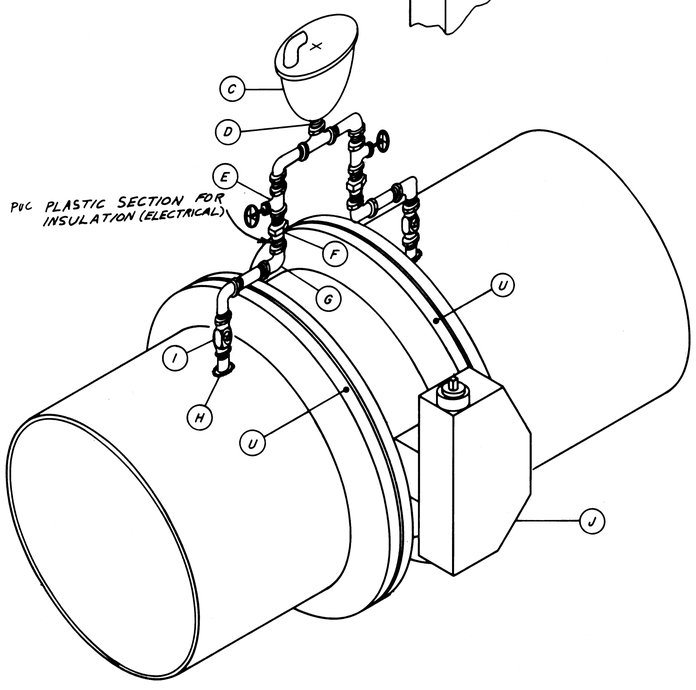

A	METER BOX SERIES 68 BROOKS OR A.E., STACKED WITH NON-TRAFFIC LID WITH SIX 3/4" VENT HOLES EQUALLY SPACED USE REDWOOD OR CONCRETE SUPPORT BLOCKS (2-2"x6"x24")
B	METER BOX SERIES 68 BROOKS OR A.E., STACKED WITH TRAFFIC LID. USE REDWOOD OR CONCRETE SUPPORT BLOCKS (2-2"x6"x 24")
C	2" AIR VALVE
D	2" CLOSE NIPPLE
E	2"BRONZE GATE VALVE CRANE NO. 472 OR A.E.
F	2" UNION COUPLING
G	2" GALVANIZED ELBOW
H	2" THREDOLET BY PIPE MANUFACTURER
I	2" CORPORATION STOP, BRONZE BODY CRANE NO.320 OR A.E.
J	MAIN LINE BUTTERFLY VALVE WITH OPERATOR, FLANGED, RUBBER SEAT, SHORT BODY.
K	DOUBLE 2"x6"x12" REDWOOD BLOCKING NOTCHED TO RECEIVE VALVE STEM. PRECAST CONCRETE PADS 12"x12"x1 1/2", MAY BE SUBSTITUTED.
L	8" ACP OR 12" BROOKS EXTENSIONS OR A.E.
M	CONCRETE IRRIGATION PIPE 24"x4'-0" GROOVE END UP FOR LID.
N	CONCRETE PRECAST LID OF ASBESTOS CEMENT WITH 2 HANDLES 5/8" Ø REINFORCED WITH 6"x6"x10" Ga. MESH WITH 1/4" Ø ROD AROUND LID EDGE.
O	TRAFFIC VALVE BOX WITH CAST IRON COVER BROOKS 3 RT 8" ACP OR 12" BROOKS EXTENSIONS, BROOKS PRODUCTS INC. OR A.E.
P	CAST IRON COVER BROOKS 3 RT WITH PRINTING AS SHOWN.
Q	TRAFFIC LID WITH SIX 3/4" DIA. HOLES EQUALLY SPACED
R	SAND BACKFILL TO MEET SPECIFICATIONS
S	SAND BACKFILL TO 12" OVER TOP OF VALVE. CONTINUE BACKFILL AND COMPACTION AS REQUIRED FOR LOCATION.
T	2" 90° GALVANIZED ELBOW
U	2-POINT TEST STATION PER DWG. WA-1

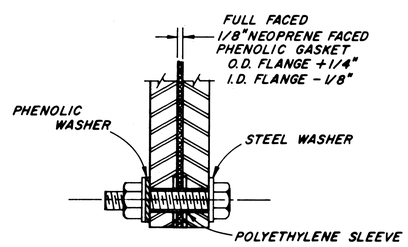

DETAIL
INSULATED FLANGE JOINT
INSTALL AT ONE FLANGE ONLY
(INSTALL INSULATED GASKET SET ONLY WHEN CALLED FOR ON PLAN & PROFILE)

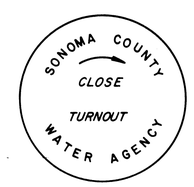

DETAIL FOR WORDING OF CONCRETE & IRON LIDS

NOTES

1. PRESSURE RATINGS OF EQUIPMENT SHOWN SHALL BE NO LESS THAN THE WORKING PRESSURE (IN FEET OF HEAD) INDICATED ON THE PROFILE DRAWINGS.
2. ALL 2". PIPING & FITTINGS SHALL BE GALVANIZED, SCHEDULE 80, UNLESS OTHERWISE SHOWN.

Return to Index

No.	DATE	REVISION	By
		AS BUILT Date 3-16-77 By:	

Contract 2

RUSSIAN RIVER – COTATI INTERTIE PROJECT
MAIN LINE VALVE TYPE A & B

SCALE: NO SCALE | APPROVED CHIEF ENGINEER | DRAWN
DATE: JULY 15, 1975 | RE 8271 | CHECKED

SONOMA COUNTY WATER AGENCY

DESIGNED | SUBMITTED | DRAWING NUMBER WA-3

MICROFILMED

Cont 2

PH 27-4B

SHEET NO. 32

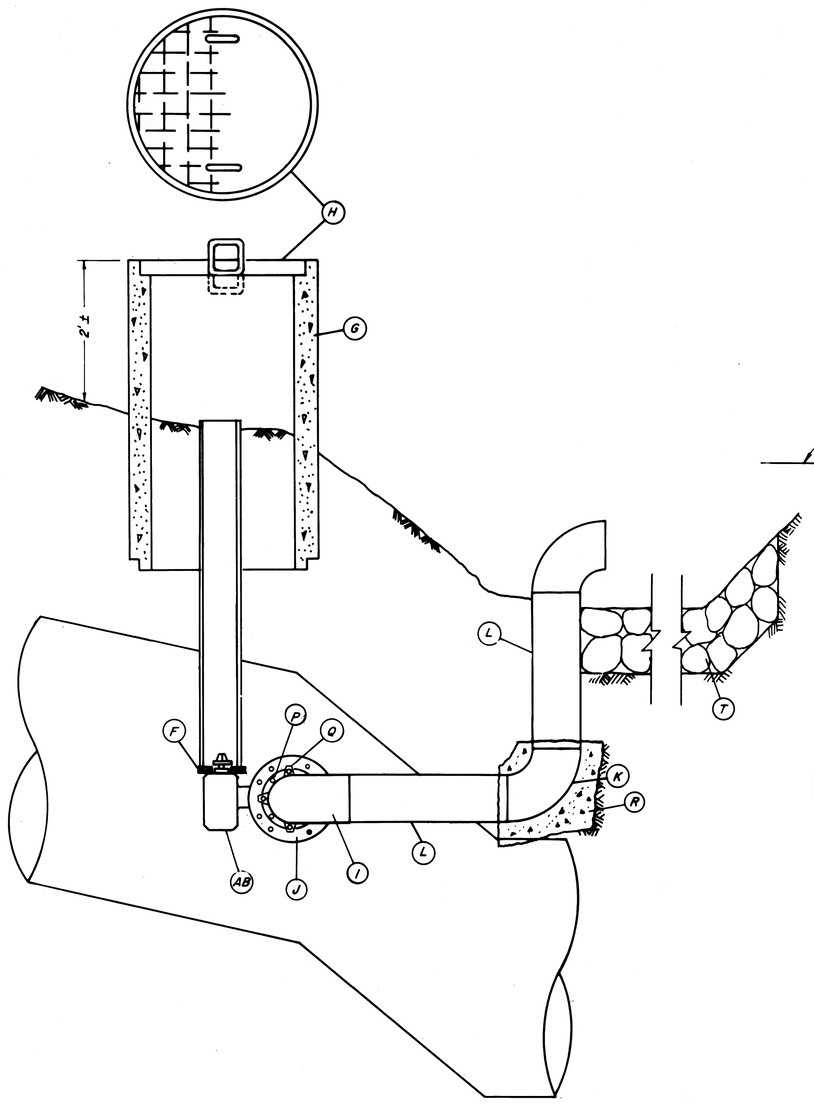

BLOWOFF TYPE A

IN AGENCY RIGHT OF WAY

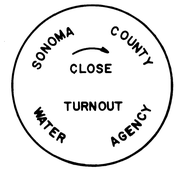

COVERS FOR (E) & (H)

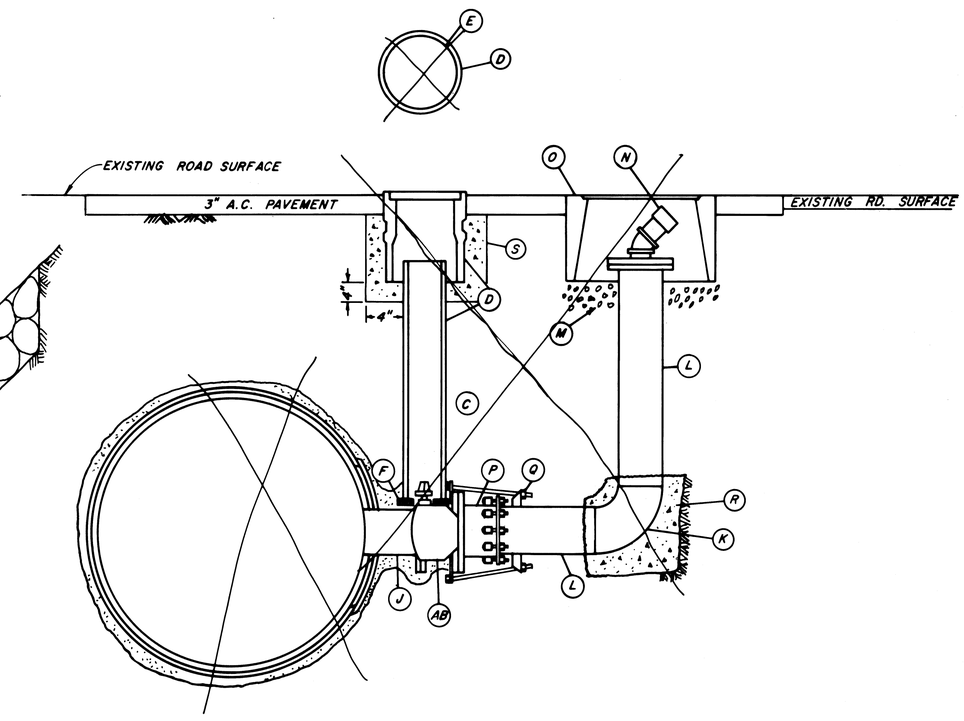

BLOWOFF TYPE B

IN ROADWAYS

	DESCRIPTION
A	BUTTERFLY VALVE W/ OPERATOR CLASS 150 MIN. FLANGED RUBBER SEAT, SHORT BODY.
B	OPERATOR MUST MEET 150% OF NORMAL DESIGN TORQUE REQUIREMENTS
C	SAND BACKFILL
D	TRAFFIC VALVE BOX W/ CAST IRON COVER, USE 12" EXTENSIONS OR 8" ACP CUT TO SIZE. BROOKS 3RT AND EXTENSIONS. BROOKS PRODUCTS INC. OR APPROVED EQUAL.
E	CAST IRON COVER – CASTING TO READ AS SHOWN – 3RT BROOKS PRODUCTS INC.
F	DOUBLE 2"X6"X12" REDWOOD BLOCKING NOTCHED TO RECEIVE VALVE STEM. PRECAST CONCRETE PIERS 12"X12"X11 1/2" MAY BE SUBSTITUTED.
G	CONCRETE IRRIGATION PIPE 24"X 4'0" GROOVE END UP FOR LID.
H	CONCRETE PRECAST LID WITH 2 HANDLES 5/8" / REINFORCED WITH 6"x6"x10Ga. MESH WITH 1/4" / ROD AROUND LID EDGE. CASTING TO READ AS SHOWN.
I	TURNOUT NOZZLE W/ WELDED 90° ELBOW TO BE FABRICATED BY PIPE MANUFACTURER.
J	TURNOUT NOZZLE W/ FLANGE SAME AS MAIN LINE PIPING FABRICATED BY PIPE MANUFACTURER.
K	WELDED 90° ELBOW CLASS EQUAL TO MAIN LINE PRESSURE.
L	STEEL PIPE SCHEDULE 40. LENGTH AS NEEDED.
M	1/2 CU. YD. DRAIN ROCK.
N	2" STD. MALLEABLE IRON CLOSE NIPPLE, 45° ELBOW AND CAP.
O	CONCRETE WATER METER BOX, BROOKS 36 SERIES, W/TRAFFIC COVER.
P	FLANGED COUPLING ADAPTER SMITH BLAIR 913 OR APPROVED EQUAL.
Q	JOINT HARNESS PER AWWA STEEL MANUAL M-11 1964 CHAPTER 19.
R	CONCRETE ANCHOR BLOCK MIN. SIZE 2'x 3'x 3'
S	CONCRETE PAD CLASS 5B 2500
T	LOOSE ROCK RIPRAP 200 SQUARE FT. COVERAGE, 1.5 FT. THICK

NOTES

1. PRESSURE RATINGS OF EQUIPMENT SHOWN SHALL BE NO LESS THAN THE WORKING PRESSURE (IN FEET OF HEAD) INDICATED ON THE PROFILE DRAWINGS

contract 2

No.	Date	REVISION	By
		AS BUILT Date 5-16-77 By:	

RUSSIAN RIVER – COTATI INTERTIE PROJECT

BLOWOFF TYPE A & B

SCALE: NONE | APPROVED CHIEF ENGINEER | DRAWN

DATE: JULY 15, 1975 | R.E. 8271 | CHECKED

SONOMA COUNTY WATER AGENCY

DESIGNED | SUBMITTED | DRAWING NUMBER WA-4

SHEET NO. 33

PH 27-4B

Return to Index

MICROFILMED

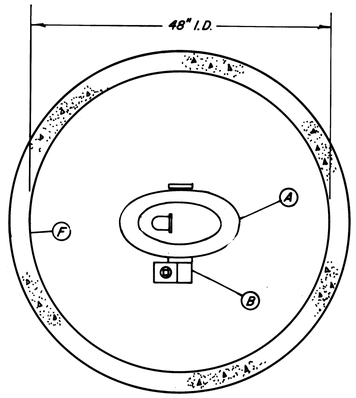

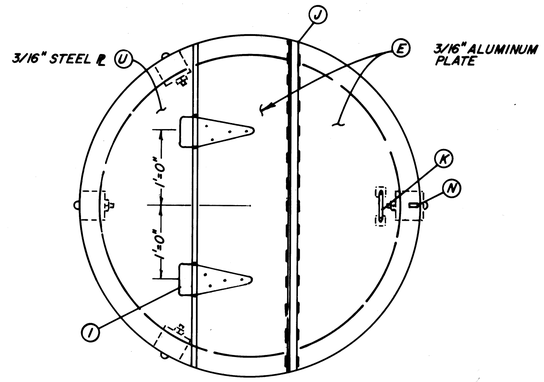

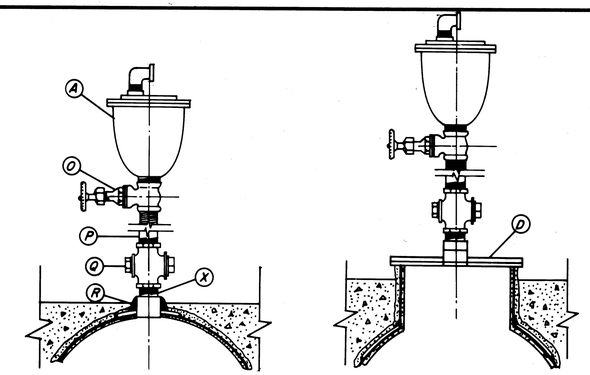

DETAIL A DETAIL B

FOR 2" AIR VALVES
(SAME HOUSING AS 4" REQUIRED)

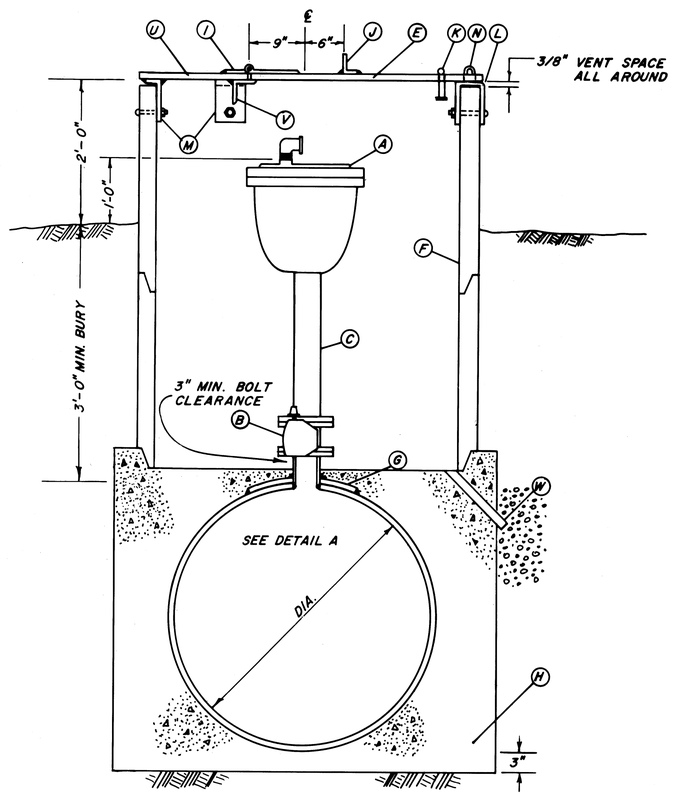

TYPE "A"
AIR VALVE INSTALLATION (4")
WITHOUT MANHOLE
IN AGENCY RIGHT OF WAY

FOR 2" AIR VALVES SEE DETAIL A

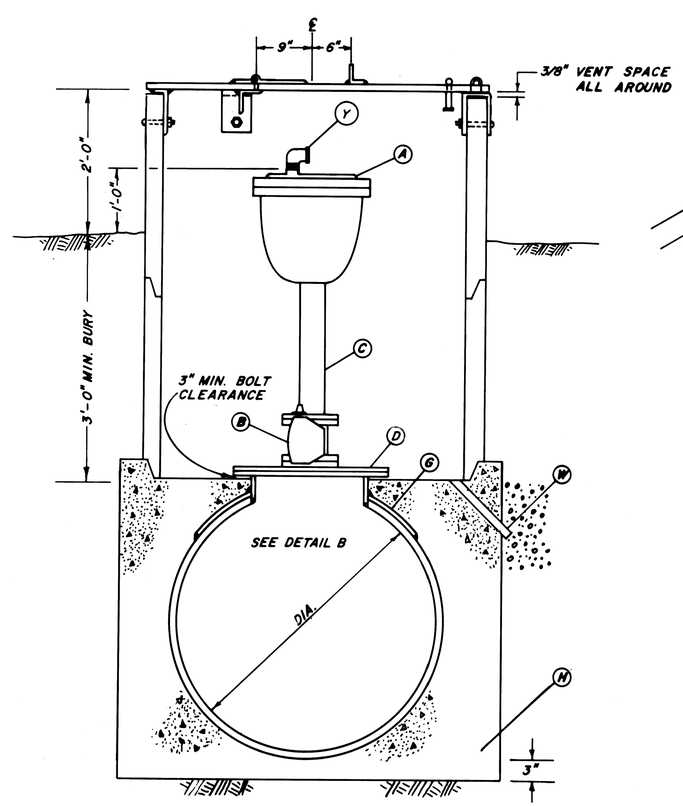

TYPE "B"
AIR VALVE INSTALLATION (4")
WITH MANHOLE
IN AGENCY RIGHT OF WAY

FOR 2" AIR VALVES SEE DETAIL B

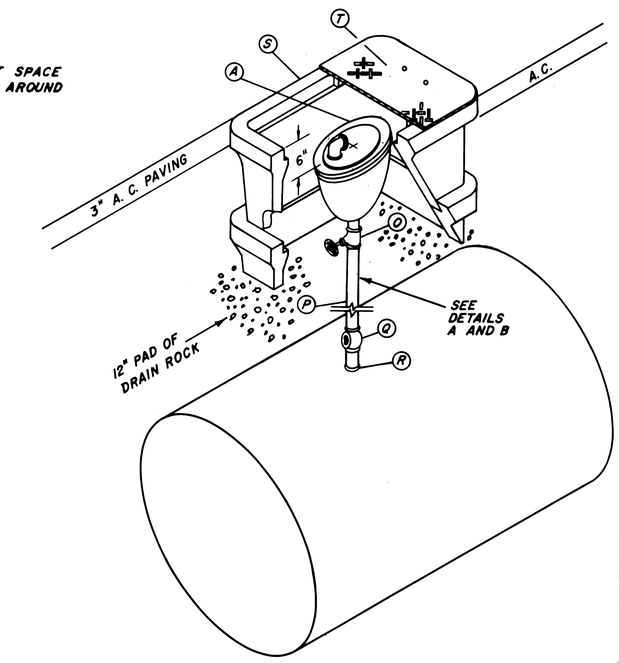

TYPE "C"
AIR VALVE INSTALLATION
FOR ROADWAYS

A	COMBINATION AIR VALVE 2" OR 4" APCO 140 SERIES, OR APPROVED EQUAL
B	BUTTERFLY VALVE, 4", W/OPERATOR, SHORT BODY, FLANGED, RUBBER SEAT. PRATT — GROUNDHOG B.I.F. MODEL 658, ALLIS-CHALMERS STREAMSEAL OR A.W.W.A. APPROVED OR EQUAL.
C	4" STEEL PIPE WITH S. O. FLANGE
D	18" MANHOLE W/18" S. O. FLANGE & 18" BLIND FLANGE DRILLED & TAPPED FOR 4" OR 2" OUTLET. A.W.W.A. C208 & C207.
E	3/16" ALUM. PLATE FOR PORTION OF COVER
F	48" I.D. CONCRETE PIPE FOR AIR VALVE INSTALLATION
G	WELD SADDLE PLATE & MANHOLE OR OUTLET SECTION BY PIPE MANUFACTURER. A.W.W.A. C208
H	CLASS 4D2000 CONCRETE 5'X 5'X [D+2(9")]
I	8"X4" HEAVY DUTY HINGE, FILLET-WELD TO STEEL PLATE, BOLT TO ALUM. PLATE
J	2-1/2"X 1-1/2"X 1/4" ALUM. ANGLE, STITCH-WELD 1" ON 4" CENTERS
K	LIFTING HANDLE, 5/8" Ø ROD
L	C 6" LEGS X 3" X 1/4" X 3" STEEL STIRRUP, BOLT TO PIPE WITH 1/2" X 5-1/2" BOLT, ALLOW 3/8" MIN. VENT SPACE BETWEEN COVER & PIPE. WELD HASP STAPLE TO 3" SECTION
M	L 6" X 3" X 3" BRACKET, BOLT AS IN ITEM L-3 REQUIRED
N	CUT 3/8" X 1-3/4" SLOT IN COVER PLATE FOR HASP STAPLE
O	2" BRONZE GATE VALVE, CRANE NO. 488 OR A.E.
P	2" PIPE, SCHEDULE 80
Q	2" BRONZE CORPORATION COCK, CRANE NO. 320
R	2" THREDOLET BY PIPE MANUFACTURER
S	METER BOX SERIES 38 BROOKS OR APPROVED EQUAL STACKED, WITH TRAFFIC LID. USE REDWOOD OR CONCRETE SUPPORT BLOCKS (2-2"X 6"X 12")
T	TRAFFIC LID SERIES 38 BROOKS. DRILL 6, 3/4" DIA. HOLES EVENLY SPACED
U	3/16" STEEL PLATE FOR PORTION OF COVER
V	L 3"X 3"X 1/4"X 3'-3" STITCH WELD 1" ON 4" CENTERS
W	2" PLASTIC PIPE FLOOR DRAIN WITH 3 CU. FT. OF DRAIN ROCK
X	NIPPLE, SCHEDULE 80
Y	GALVANIZED ELBOW

NOTES

1. PRESSURE RATINGS OF EQUIPMENT SHOWN SHALL BE NO LESS THAN THE WORKING PRESSURE (IN FEET OF HEAD) INDICATED ON THE PROFILE DRAWINGS
2. ALL PIPING, 4" AND SMALLER, SHALL BE GALVANIZED UNLESS OTHERWISE NOTED

Contract 2

No.	Date	REVISION	By
		AS BUILT Date 5-16-77 By: D. J. R. Allen	

RUSSIAN RIVER – COTATI INTERTIE PROJECT
AIR VALVE INSTALLATION
TYPE A, B & C

SCALE: NONE
DATE: JULY 15, 1975
APPROVED CHIEF ENGINEER: Yoder W Miller RE 8271
DRAWN
CHECKED JA

SONOMA COUNTY WATER AGENCY

DESIGNED R.E. Schuler
SUBMITTED
DRAWING NUMBER WA-5

SHEET NO. 34

PH 27-48

Return to Index

MICROFILMED

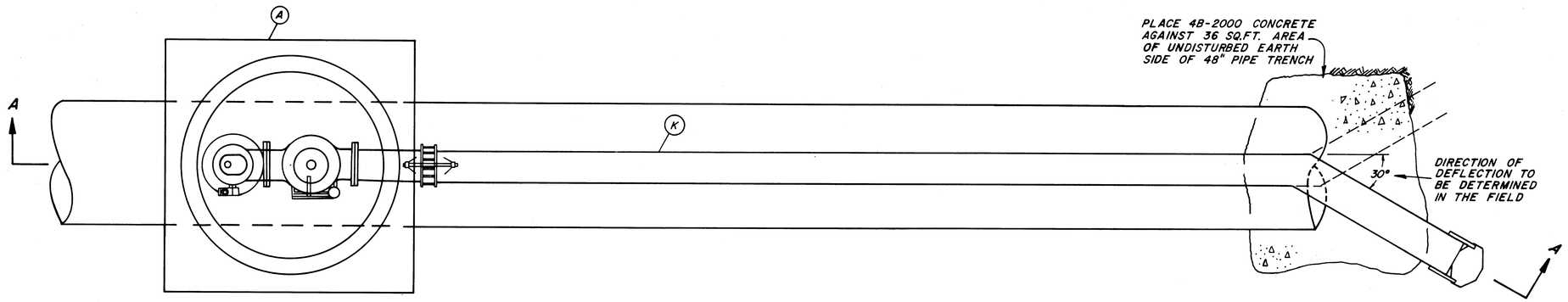

PLAN
SCALE: 1" = 2'

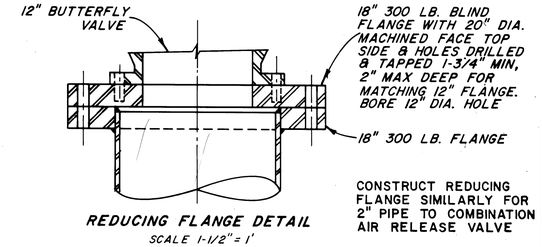

REDUCING FLANGE DETAIL
SCALE 1-1/2" = 1'

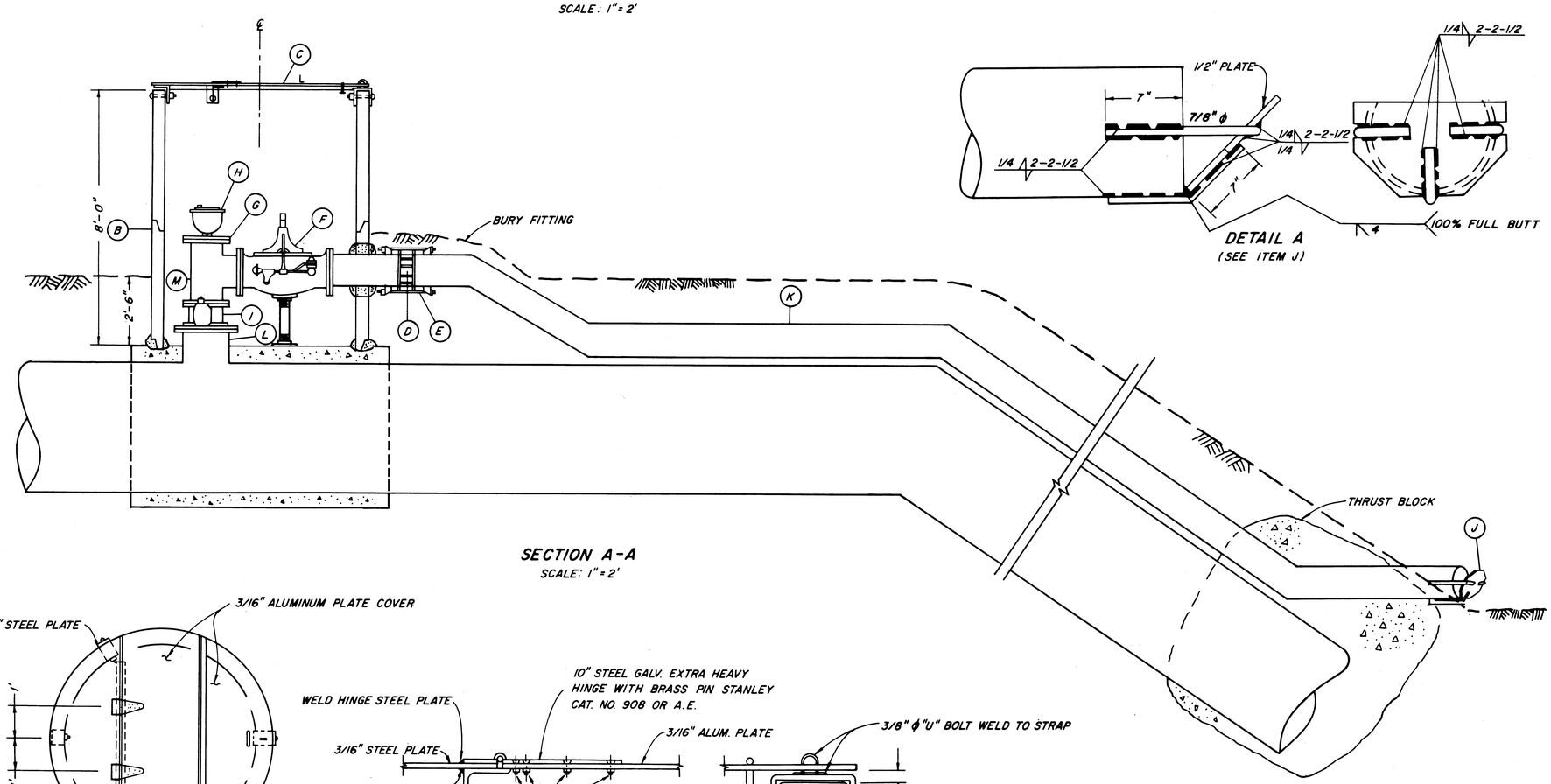

DETAIL A
(SEE ITEM J)

SECTION A-A
SCALE: 1" = 2'

A	8'x8'x 4.5' CONCRETE OUTLET BASE FOR CONCRETE PIPE INSTALL 4B 2000 CONCRETE SEE STANDARD SPEC. SECTION 201-1
B	72" DIAMETER REINFORCED CONCRETE PIPE SECTIONS
C	ALUMINUM HINGED LID WITH HASP.
D	12" COUPLING DRESSER OR SMITH BLAIR A.E.
E	BOLTED JOINT HARNESS PER. AWWA M-11 (STEEL PIPE MANUAL).
F	PRESSURE RELIEF VALVE — NON-SLAMMING BAILEY NO. 428 OR A.E.
G	12" 300 LB. BLIND FLANGE TAPPED FOR 2" OUTLET.
H	2" COMBINATION AIR RELEASE VALVE APCO 145 C OR A.E.
I	12" BUTTERFLY VALVE WITH OPERATOR – SHORT BODY, FOR NON-EMBEDDED SERVICE
J	DIFFUSER PLATE 1/2" ON 45° ANGLE WITH WELDED BRACES 7/8" ϕ
K	12" WELDED STEEL PIPE, ASTM A53, GR/B, LENGTH AS SPECIFIED. CEMENT MORTAR LINED & COATED NOT LESS THAN 3/8" WALL THICKNESS
L	18" MANHOLE WITH 18" 300LB. BLIND FLANGE MACHINED TO MATCH 150 LB. FLANGE OF BUTTERFLY VALVE
M	12" FLANGED STEEL TEE

NOTES
1. PRESSURE RATINGS OF EQUIPMENT SHALL BE OF NO LESS THAN THE WORKING PRESSURE (IN FEET OF HEAD) INDICATED ON THE PROFILE DRAWINGS

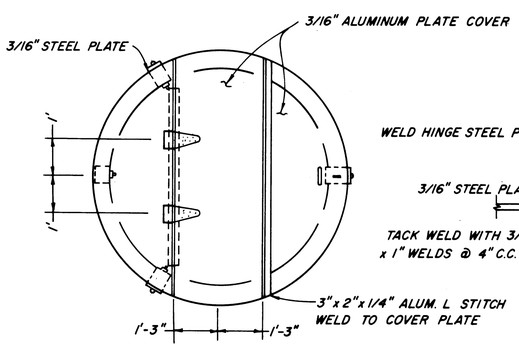

LID DETAIL
SCALE 1/2" = 1'

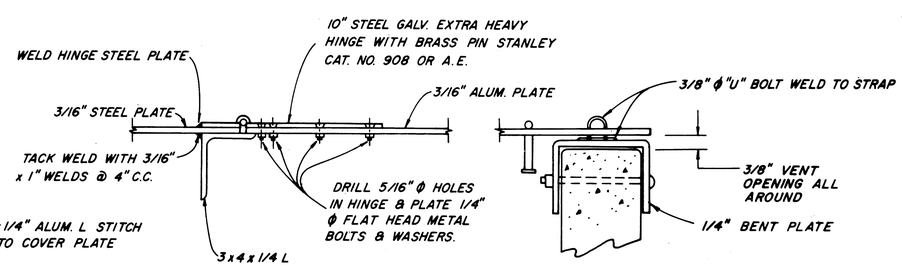

HINGE & HASP DETAILS
NOT TO SCALE

Return to Index

No.	DATE	REVISION	By
		AS BUILT Date 5-16-77 By:	

contract 2

RUSSIAN RIVER – COTATI INTERTIE PROJECT
PRESSURE RELIEF VALVE INSTALLATION

SCALE: AS SHOWN | APPROVED CHIEF ENGINEER | DRAWN
DATE: JULY 15, 1975 | RE 8271 | CHECKED

SONOMA COUNTY WATER AGENCY

DESIGNED | SUBMITTED | DRAWING NUMBER WA-6

SHEET NO. 35

PH 27-4B

(ALL PAVED ROADS)

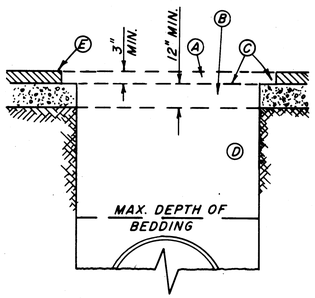

CLASS "A" BACKFILL AND TRENCH SURFACING

(A) REPLACE EXISTING SURFACE WITH ASPHALTIC CONCRETE CONFORMING WITH SECTION 302-5 STD. SPECS.

(B) CLASS 2 AGGREGATE BASE CONFORMING WITH SECTION 200-2 STD. SPECS.

(C) RS-1 EMULSIFIED ASPHALT

(D) STRUCTURE BACKFILL MATERIAL COMPACTED TO 95% WITHIN 3' OF FINISHED GRADE, 90% BELOW.

(E) ROADWAY PAVEMENT TO BE SAW-CUT & REMOVED FOR 6" EACH SIDE OF TRENCH.

(DIRT ROADS)

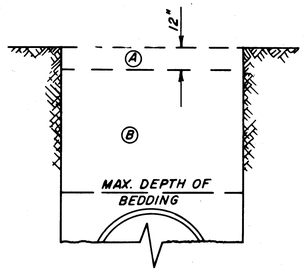

CLASS "B" BACKFILL AND TRENCH SURFACING

(A) EXCAVATED OR IMPORTED MATERIAL COMPACTED IN 6-INCH LIFTS TO 85%. NO ROCKS LARGER THAN 4" IN DIAMETER SHALL BE INCLUDED IN THIS MATERIAL.

(B) LOCAL OR IMPORTED MATERIAL COMPACTED OR CONSOLIDATED TO 80%

(GRAVEL ROADS) OR (SHALE ROADS)

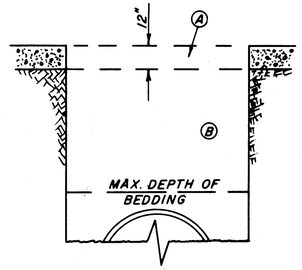

CLASS "C" BACKFILL AND TRENCH SURFACING

(A) REPLACE EXISTING ROADWAY SURFACE WITH UNTREATED ROCK BASE CONFORMING WITH SECTION 301-2 STD. SPECS. COMPACTED TO 90%.

(B) LOCAL OR IMPORTED MATERIAL COMPACTED OR CONSOLIDATED TO 85%

(DRY PASTURE)

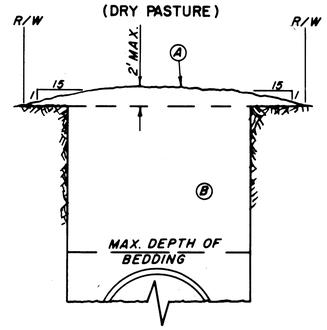

CLASS "D" BACKFILL

(A) EXCESS SPOIL TO BE MOUNDED WITHIN R/W AS SHOWN EXCEPT AT LOCATIONS OF CROSS DRAINS OR SWALES; AT THESE LOCATIONS A "V" NOTCH WITH 6:1 SIDE SLOPES SHALL BE CONSTRUCTED.

(B) EXCAVATED OR IMPORTED MATERIAL COMPACTED OR CONSOLIDATED TO 76%

(IRRIGATED, CULTIVATED) (OR CROP LAND)

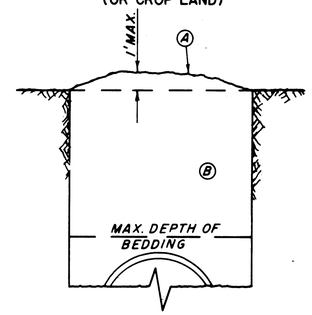

CLASS "E" BACKFILL

(A) EXCESS SPOIL TO BE MOUNDED EVENLY OVER TRENCH EXCEPT AT CROSS SWALES.

(B) EXCAVATED OR IMPORTED MATERIAL COMPACTED OR CONSOLIDATED TO 76%

— GENERAL NOTES —

1. CLASS "A" BACKFILL AND TRENCH SURFACING SHALL BE REQUIRED ON ALL PAVED ROADS AND STREETS & WHERE SPECIFIED IN THE SPECIAL PROVISIONS.
2. CLASS "B" BACKFILL AND TRENCH SURFACING SHALL BE REQUIRED ON DIRT ROADS & TRAVELED WAYS & WHERE SPECIFIED IN THE SPECIAL PROVISIONS.
3. CLASS "C" BACKFILL AND TRENCH SURFACING SHALL BE REQUIRED ON GRAVEL OR SHALE ROADS & WHERE SPECIFIED IN THE SPECIAL PROVISIONS.
4. CLASSES "D" & "E" BACKFILL SHALL BE REQUIRED IN THE AGENCY RIGHT-OF-WAY UNLESS OTHERWISE INDICATED ON THE PLAN AND PROFILE.
5. NO ROCK LARGER THAN 1" SHALL BE PLACED WITHIN 6" OF THE PIPE.
6. ~~CONCRETE~~ COATED PIPE IN WET TRENCH CONDITIONS SHALL BE ~~BEDDED IN 3/4"~~ MINUS DRAIN ROCK IN LIEU OF 3" SAND BEDDING OR ~~EXCAVATED SELECT~~ MATERIAL.
7. A MINIMUM OF 3'-0" COVER OVER THE TOP OF THE PIPE SHALL BE MAINTAINED UNLESS OTHERWISE SPECIFIED OR SHOWN.
8. ~~THE~~ CONTRACTOR SHALL BE REQUIRED TO ~~BACKFILL A~~ SUFFICIENT DEPTH ~~OVER THE TOP OF~~ THE PIPE TO PREVENT ~~FLOATING IN THE EVENT THE TRENCH BECOMES~~ FLOODED. DELETED
9. THE THICKNESS OF ASPHALTIC CONCRETE AND UNTREATED ROCK BASE SHOWN FOR CLASS "A" BACKFILL AND TRENCH SURFACING ARE THE MINIMUM THICKNESS PERMITTED. WHERE THE EXISTING PAVEMENT AND/OR ROCK BASE IS THICKER THAN THE MINIMUM IT SHALL BE REPLACED TO THE EXISTING THICKNESS.
10. ~~ON STEEP~~ SLOPES (30% OR MORE) AT EVERY 100' ~~PROVIDE A FULL DEPTH~~ PLUG OF NATIVE ~~MATERIAL~~ APPROXIMATELY 5' THICK TO ~~PREVENT~~ PIPING OF BEDDING AND BACKFILL ~~MATERIAL~~. PLUG SHALL ~~INCLUDE~~ BEDDING AND ~~BACKFILL~~ COMPACTED TO A RELATIVE COMPACTION ~~OF 85%~~. DELETED
11. THE CLASS OF BEDDING AND BACKFILL DESIGNATED ON THE PLAN AND PROFILE DRAWINGS WILL BE BY SYMBOL CONSISTING OF A LOWER CASE LETTER FOR THE CLASS OF BEDDING, FOLLOWED BY A SLASH, THEN FOLLOWED BY AN UPPER CASE LETTER FOR THE CLASS OF BACKFILL.
    Example: e/B = CLASS "e" BEDDING AND CLASS "B" BACKFILL.

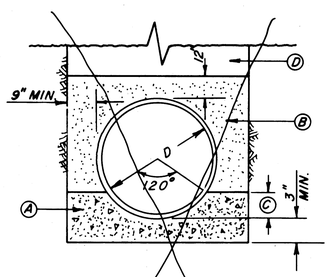

CLASS "a" BEDDING

(A) CONCRETE, CLASS 4-B-1000.

(B) BEDDING CONFORMING WITH SECTION 306 STANDARD SPECS COMPACTED TO 80%.

(C) 1/4 D MINIMUM.

(D) BACKFILL AS INDICATED FOR LOCATION UNDER GENERAL NOTES.

NOT USED

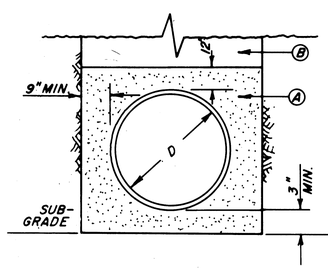

CLASS "b" BEDDING

(A) BEDDING CONFORMING WITH THE SPECIAL PROVISION (SAND EQUIVALENT OF 30 OR BETTER) COMPACTED TO 90%.

(B) BACKFILL AS INDICATED FOR LOCATION UNDER GENERAL NOTES.

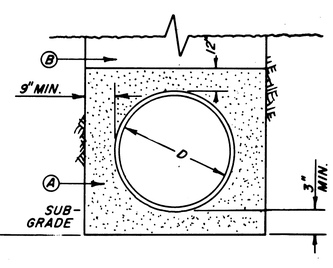

CLASS "c" BEDDING

(A) EXCAVATED OR IMPORTED MATERIAL PER SPECIAL PROVISIONS COMPACTED TO 85%

(B) BACKFILL AS INDICATED FOR LOCATION UNDER GENERAL NOTES.

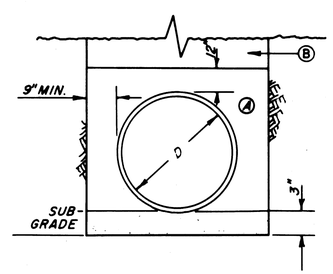

CLASS "d" BEDDING

(A) EXCAVATED OR IMPORTED MATERIAL PER SPECIAL PROVISIONS COMPACTED TO 80%

(B) BACKFILL AS INDICATED FOR LOCATION UNDER GENERAL NOTES

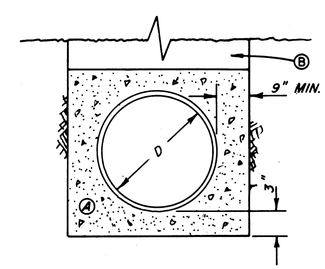

CLASS "e" BEDDING

(A) CONCRETE, CLASS 5-B-2000 MIN., CONFORMING WITH THE SPECS.

(B) BACKFILL AS INDICATED FOR LOCATION UNDER GENERAL NOTES.

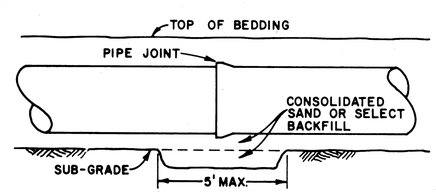

BELL HOLE DETAIL

Return to Index

No.	DATE	REVISION	By
		AS BUILT Date 5-16-77 By David R. Ellis	

contract 2

RUSSIAN RIVER-COTATI INTERTIE PROJECT
PIPE BEDDING, BACKFILL AND TRENCH SURFACING

SCALE: NONE
DATE: JULY 15, 1975
APPROVED CHIEF ENGINEER: Gordon W. Mullen RE 8271
DRAWN
CHECKED
DESIGNED: R.E. Schuber
SUBMITTED
DRAWING NUMBER: WA-7

SONOMA COUNTY WATER AGENCY

SHEET NO. 36

PH 27-4B

MICROFILMED

STEEL SIGN AND POST

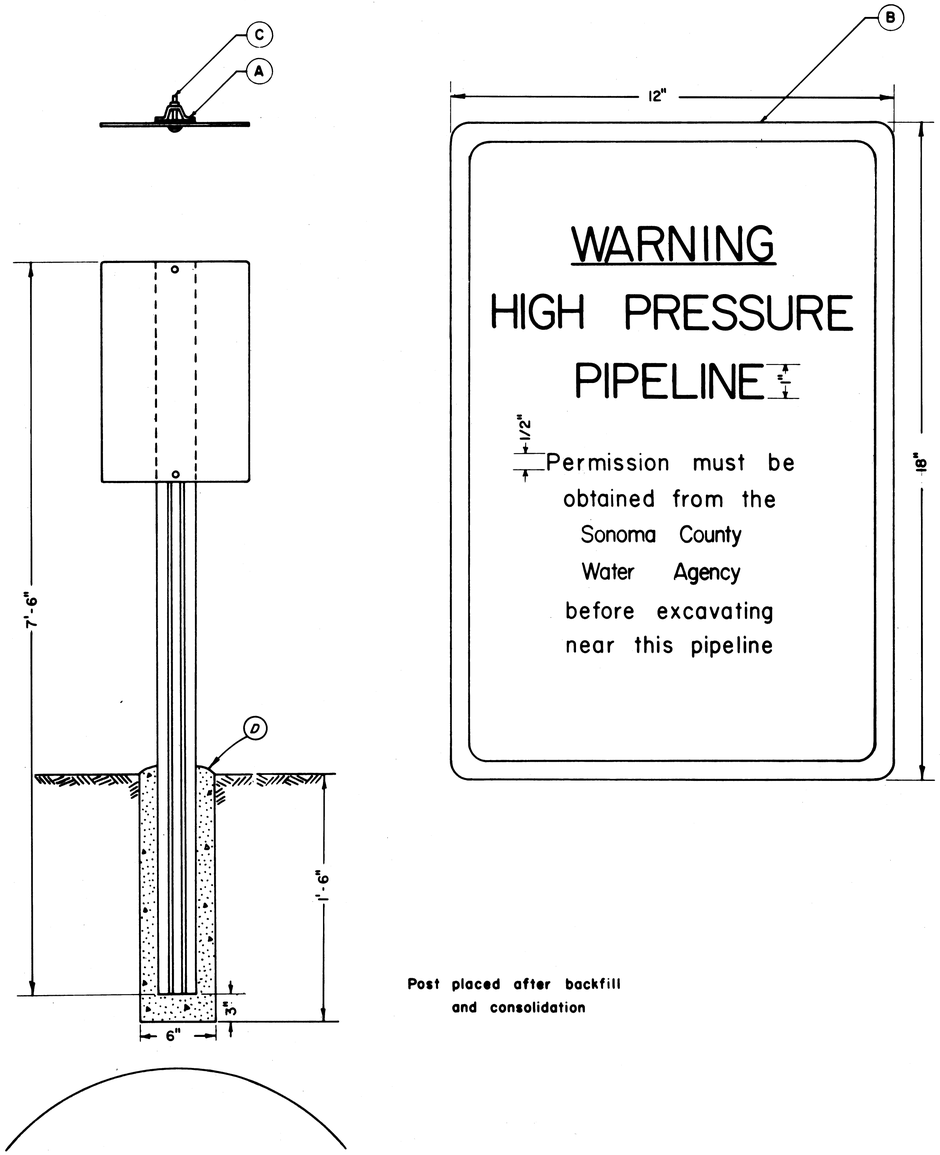

Post placed after backfill
and consolidation

D	4-B-2000 concrete footing
C	Two bolts 5/16" x 2 1/4", two 5/16" nuts, two fibre washers, two 1 1/2" x 3" x 1/8" plates
B	Perma sign reflective — 12" x 18", Red on White - Bowman Industries Inc. or A.E.
A	7 1/2' Post — overall width 3 1/16", back thickness 1/8" side thickness .1172", overall depth 1 7/16", flange thickness 1/8", weight 2 lbs. per ft.

Return to Index

contract 2

No.	DATE	REVISION	By
		AS BUILT Date 5-16-77 By Da. J.R. [illegible]	

HIGH PRESSURE PIPELINE
WARNING SIGN

SCALE: NONE
DATE: JULY 15, 1975
APPROVED CHIEF ENGINEER [signature] RE 8271
DRAWN
CHECKED [signature]

SONOMA COUNTY
WATER AGENCY

DESIGNED R.E. [signature]
SUBMITTED [signature]
DRAWING NUMBER WA-8

SHEET NO. 37 PH 27-4B

MICROFILMED 3

SONOMA COUNTY WATER AGENCY

RUSSIAN RIVER-COTATI INTERTIE PROJECT

PIPELINE CONTRACT NO. 3

COTATI RESERVOIR TO PETALUMA AQUEDUCT

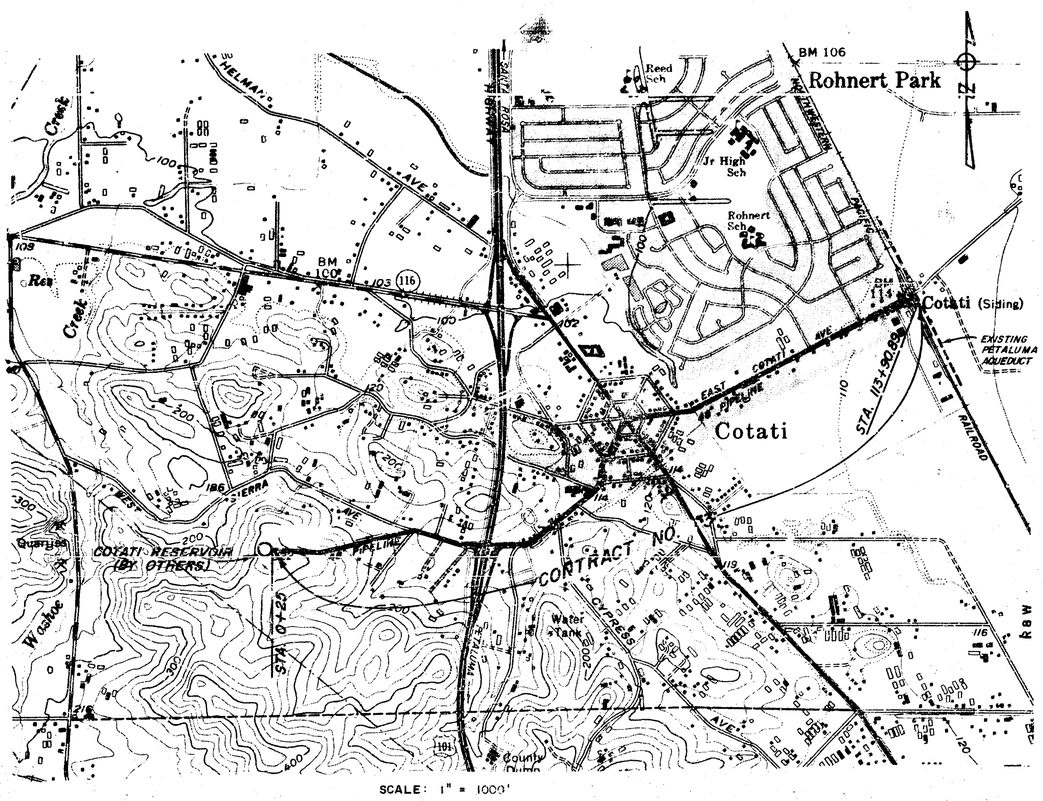

GENERAL NOTES

1. ELEVATIONS SHOWN ARE IN FEET & DECIMALS THEREOF ABOVE N.G.S. M.S.L.
2. STATIONS SHOWN ON PLAN & PROFILE ARE HORIZONTAL DISTANCES UNLESS OTHERWISE NOTED.
3. ALL STATIONS, GRADES & ELEVATION ARE SUBJECT TO REVISION TO SUIT FIELD CONDITIONS.
4. AERIAL PHOTOS TAKEN MAY 5, 1971
5. DRAWINGS ARE DESIGNATED BY THEIR LAST THREE DIGITS, e.g., DRAWING NO. 60-4-102.201 IS REFERRED TO AS DRAWING NO 201, ETC.

LEGEND

FACILITIES TO BE CONSTRUCTED

CENTERLINE OF RIGHT OF WAY
ELECTROLYSIS TEST STATION (ES 2P)
GALVANIC ANODE (GA A)
PRE = PERMANENT REFERENCE ELECTRODE
VEGETATION
EROSION CONTROL
PERMANENT PASTURE REESTABLISHMENT
INSULATION FLANGE
HIGH PRESSURE PIPELINE WARNING SIGN
MANHOLE
MAINLINE VALVE
AIR VALVE
PRESSURE RELIEF VALVE
TURNOUT
BLOWOFF
BLIND TEE OR LATERAL
AIR VALVE AROUND MAINLINE VALVE
FIELD GATE ON ℄ OF R/W

CLASS OF BEDDING & BACKFILL DESIGNATION PER DWG. NO. WA-7
SPECIFIC PIPE ELEVATIONS SHOWN ON PIPE PROFILE ARE FOR OUTSIDE TOP OF PIPE.

EXISTING FACILITIES

GAS LINE — G —
SANITARY SEWER — SS —
WATER LINE — 6"W —
TELEVISION CABLE — TV —
ELECTRIC CABLE — E —
TELEPHONE CABLE — ▲ —
FENCE — x — x —
PROPERTY LINE — ℞ —
POWER AND/OR TELEPHONE CABLE & GUY

OTHER INFORMATION

SOIL SAMPLE LOCATION (7)
SURVEY CONTROL POINT (A-37)
REFERENCE POINTS FOR LOCATING R/W CENTERLINE

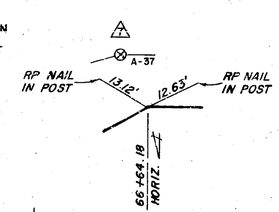

RIGHT OF WAY & CONSTRUCTION EASEMENT.
UNLESS INDICATED OR DIRECTED OTHERWISE, PIPE ℄ SHALL BE ON R/W ℄

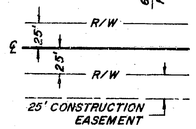

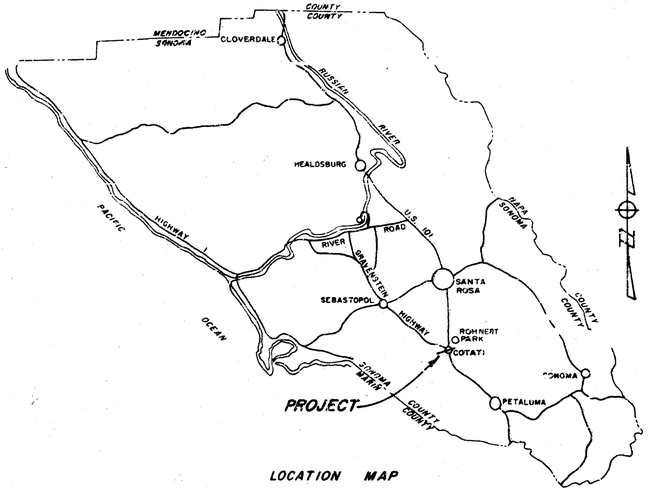

LOCATION MAP

INDEX TO DRAWINGS

SHT. NO.	DRAWING NO.	TITLE
1	60-4-102.301	LOCATION MAP & INDEX TO DRAWINGS
2	102.302	HYDRAULIC GRADE LINE.
3	102.303	PLAN & PROFILE - STA. 0+25 TO STA. 28+32
4	102.304	STA. 28+32 TO STA. 55+55
5	102.305	STA. 55+55 TO STA. 84+74
6	102.306	STA. 84+74 TO STA. 113+82 ±
7	102.307	RESERVOIR CONNECTION, LOG OF BORINGS & THRUST WELDS
8	102.308	BEDDING, BACKFILL & LAGUNA CROSSING
9	102.309	RAILROAD XING & PETALUMA AQUEDUCT CONNECTION
10	102.310	MISCELLANEOUS DETAILS
11	WA-1	GALVANIC ANODES AND ELECTROLYSIS TEST STATIONS
12	WA-2	DISTRIBUTION TURNOUT TYPE A AND TYPE B
13	WA-3	MAIN LINE VALVE TYPE A & B
14	WA-5	AIR VALVE INSTALLATION TYPE A, B & C
15	WA-8	HIGH PRESSURE PIPELINE WARNING SIGN

UTILITY NOTES

THE AGENCY HAS, TO THE BEST OF ITS ABILITY, DELINEATED ON THE DRAWINGS UTILITY INSTALLATIONS TO BE ENCOUNTERED WITHIN THE LIMITS OF THE WORK. SUCH INFORMATION IS BASED UPON INFORMATION FURNISHED TO THE AGENCY BY THE UTILITY OWNERS, AND THE AGENCY, EITHER EXPRESSLY OR BY IMPLICATION, DOES NOT GUARANTEE THAT UTILITY INSTALLATIONS WILL BE FOUND AT THE LOCATIONS OR DEPTHS INDICATED. THE AGENCY ASSUMES NO RESPONSIBILITY FOR THE ACCURACY OF THE INFORMATION SHOWN OR FOR THE INADVERTENT OMISSION OF ANY SUCH INFORMATION. PROFILES DO NOT SHOW ALL UTILITY SERVICE LATERALS.

Return to Index

No.	DATE	REVISION	By
		AS BUILT Date 5-16-77	

RUSSIAN RIVER – COTATI INTERTIE PROJECT
COTATI RESERVOIR TO PETALUMA AQUEDUCT
LOCATION MAP & INDEX TO DRAWINGS

SCALE: AS SHOWN | APPROVED CHIEF ENGINEER | DRAWN: S.F.M.
DATE: JULY 1, 1975 | RE 8271 | CHECKED: S.U.

SONOMA COUNTY WATER AGENCY

DESIGNED | SUBMITTED | DRAWING NUMBER 60-4-102.301

No.	DATE	REVISION	By
		5-16-77	

RUSSIAN RIVER – COTATI INTERTIE PROJECT

COTATI RESERVOIR TO PETALUMA AQUEDUCT

HYDRAULIC GRADE LINE

SCALE: NONE | APPROVED CHIEF ENGINEER RE 8271 | DRAWN sfm | CHECKED

DATE: JULY 2, 1975

SONOMA COUNTY WATER AGENCY

DESIGNED R.E. Schuler | SUBMITTED | DRAWING NUMBER 60-4-102.302

SHEET NO. 2

Return to Index

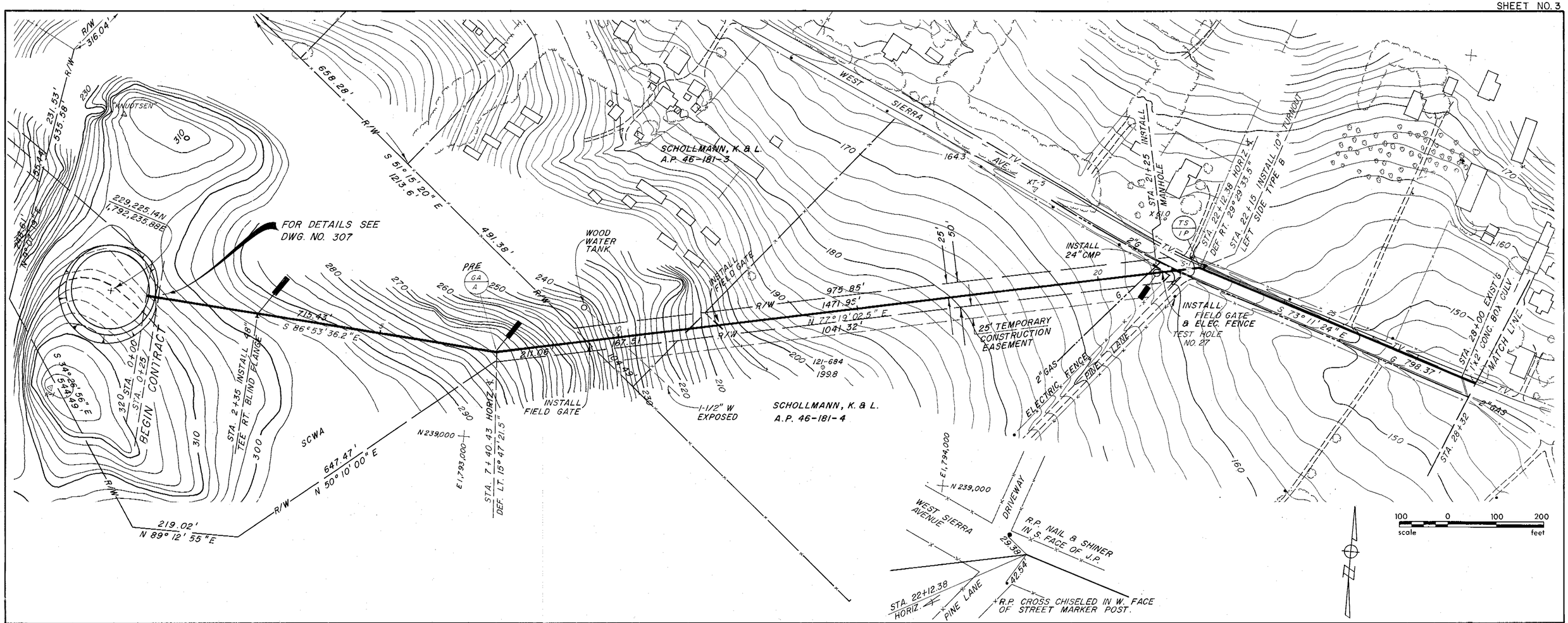

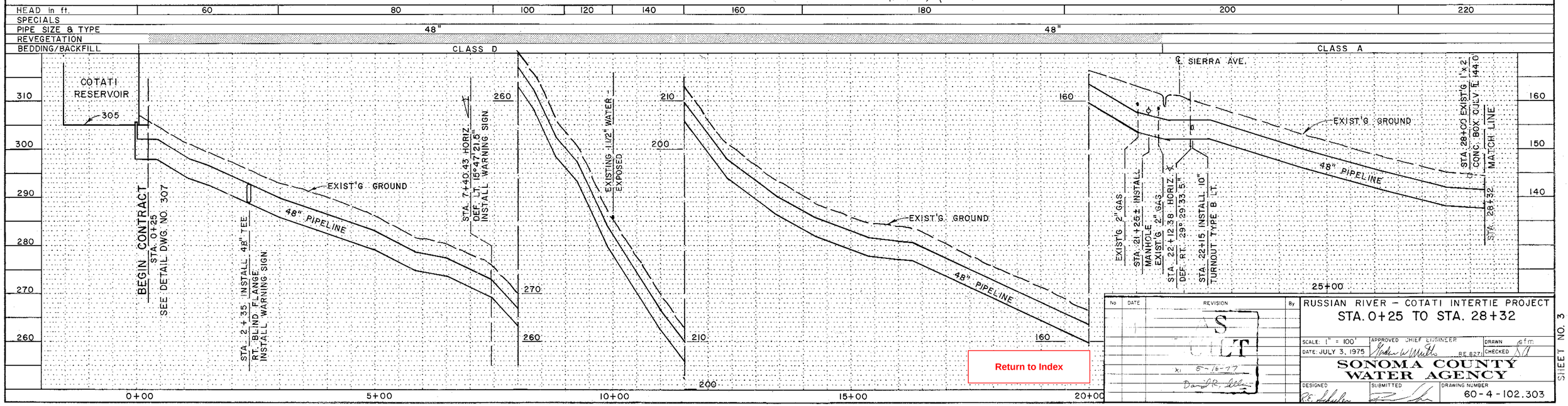

No.	DATE	REVISION	By

RUSSIAN RIVER – COTATI INTERTIE PROJECT

STA. 0+25 TO STA. 28+32

SCALE: 1" = 100' | APPROVED CHIEF ENGINEER | DRAWN

DATE: JULY 3, 1975 | RE 827 | CHECKED

SONOMA COUNTY WATER AGENCY

DESIGNED | SUBMITTED | DRAWING NUMBER 60-4-102.303

Return to Index

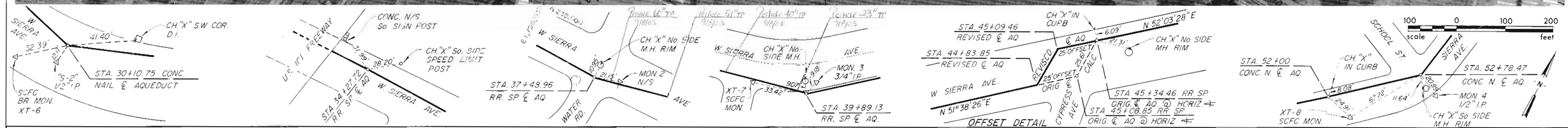

HEAD in ft.	220 / 240
SPECIALS	★ 1' CONCRETE COVER Due TO ONLY 26" COVER
PIPE SIZE & TYPE	48"
BEDDING/BACKFILL	CLASS A

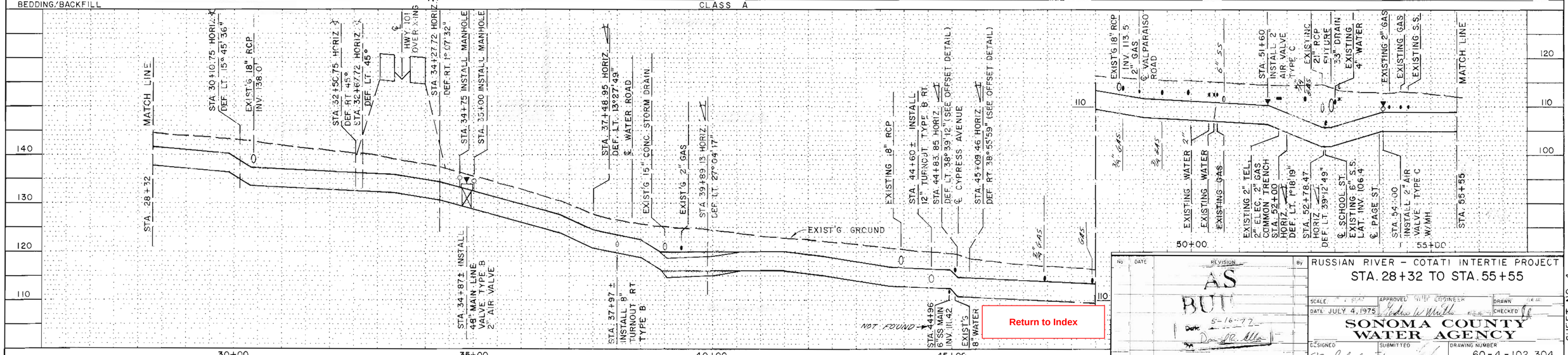

Return to Index

No.	DATE	REVISION	By
		AS BUILT Date 5-16-72	

RUSSIAN RIVER – COTATI INTERTIE PROJECT

STA. 28+32 TO STA. 55+55

SCALE: 1" = 10' | APPROVED: CHIEF ENGINEER | DRAWN | CHECKED

DATE: JULY 4, 1975

SONOMA COUNTY WATER AGENCY

DESIGNED | SUBMITTED | DRAWING NUMBER 60-4-102.304

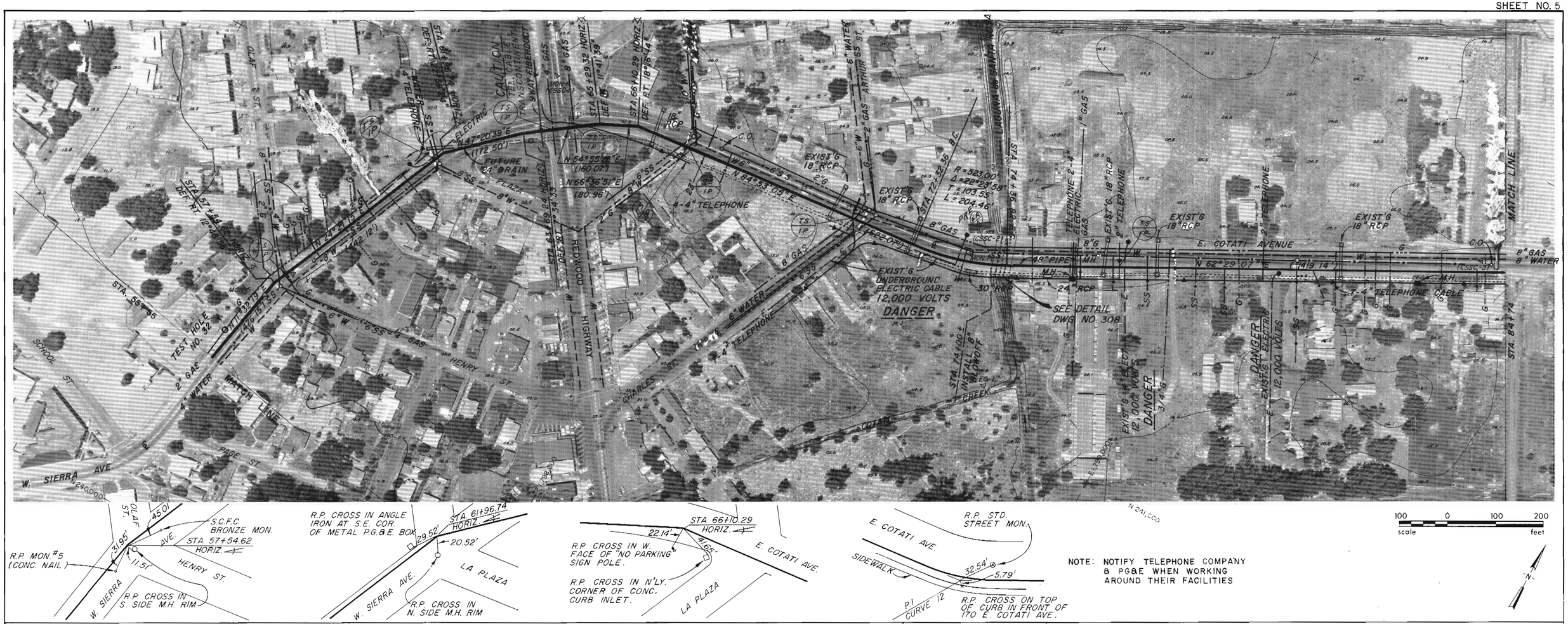

NOTE: NOTIFY TELEPHONE COMPANY & PG&E WHEN WORKING AROUND THEIR FACILITIES

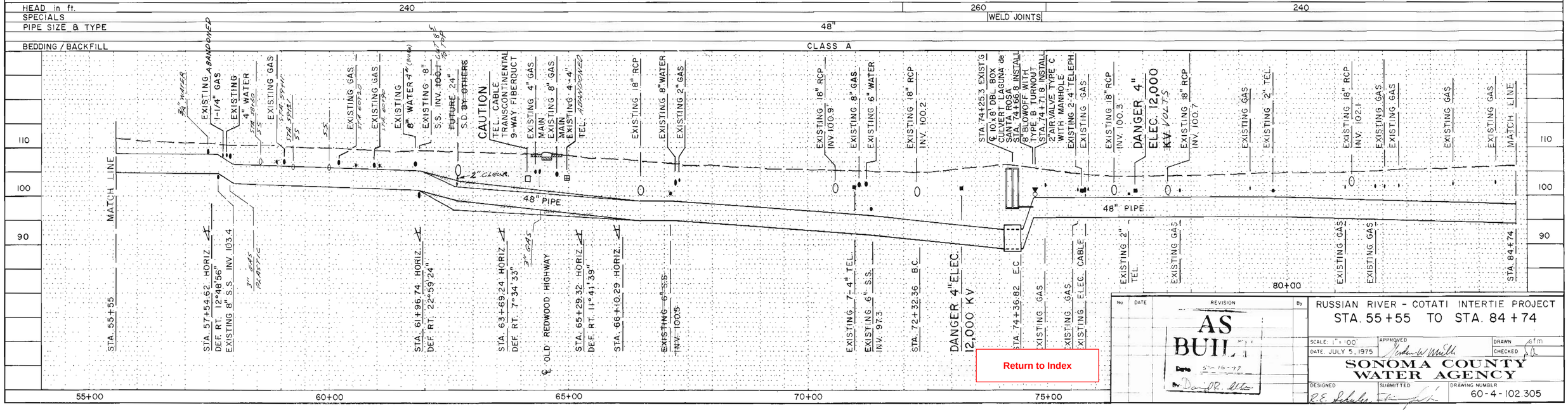

No	DATE	REVISION	By
		AS BUILT Date 5-16-77 By	

RUSSIAN RIVER - COTATI INTERTIE PROJECT

STA. 55+55 TO STA. 84+74

SCALE: 1" = 100'
DATE: JULY 5, 1975
APPROVED
DRAWN GFM
CHECKED

SONOMA COUNTY WATER AGENCY

DESIGNED R.E. Schuler
SUBMITTED
DRAWING NUMBER 60-4-102.305

Return to Index

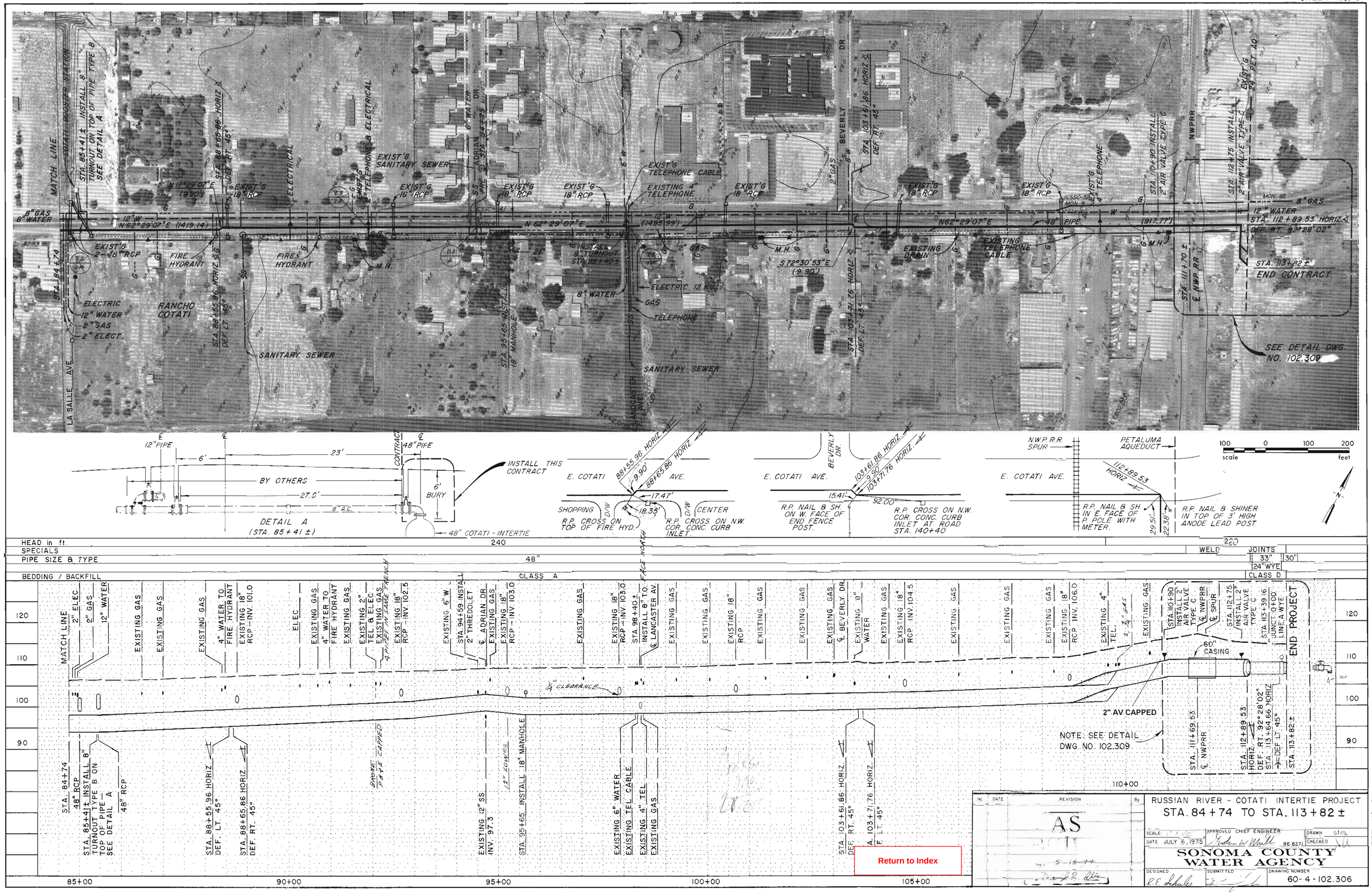
MATCH LINE
COTATI BOOSTER STATION
STA. 85+41± INSTALL 8" TURNOUT ON TOP OF PIPE TYPE B SEE DETAIL A
STA. 88+55.96 HORIZ. DEF. RT. 45°
EXIST'G 2" TELEPHONE & ELECTRICAL
EXIST'G SANITARY SEWER
EXIST'G 18" RCP
EXIST'G 16" RCP
EXIST'G 18" RCP
EXIST'G TELEPHONE CABLE
EXISTING 4" TELEPHONE
EXIST'G 18" RCP
EXIST'G 18" RCP
EXIST'G 18" RCP
EXIST'G 4" TELEPHONE
STA. 110+90 INSTALL 2" AIR VALVE TYPE C
NWPRR
STA. 112+75 INSTALL 2" AIR VALVE TYPE C
EXIST'G 24" PET. AQ.
STA. 103+61.86 HORIZ. DEF. RT. 45°
BEVERLY DR.
8" GAS
8" WATER
12" W
N 62° 29' 07" E (1419.14')
N 17° 29' 07" E (9.90')
EXIST'G 2-48" RCP
FIRE HYDRANT
FIRE HYDRANT
M.H.
N 62° 29' 07" E
12" W (1495.99')
INSTALL 8" TURNOUT STA. 88+40±
2" GAS
M.H.
S 72° 30' 53" E (9.90')
N62° 29' 07" E
48" PIPE
(917.77')
M.H.
EXISTING DRAIN
EXISTING TELEPHONE CABLE
MON. 10
8" GAS
12" WATER
STA. 112+83.53 HORIZ.
DEF. RT. 92° 28' 02"
STA. 113+82± END CONTRACT
STA. 84+74
ELECTRIC
12" WATER
2" GAS
2" ELECT.
RANCHO COTATI
STA. 88+55.96 HORIZ. DEF. LT. 45°
SANITARY SEWER
STA. 95+65 INSTALL 18" MANHOLE
8" WATER
ELECTRIC 12 KV
GAS
TELEPHONE
SANITARY SEWER
STA. 103+71.76 HORIZ. DEF. LT. 45°
STA. 111+70± ℄ NWP RR
SEE DETAIL DWG. NO. 102.309
LA SALLE AVE.
LANCASTER AVE.
E. RADDING
12" PIPE
6'
23'
BY OTHERS
27.5'
8" A.C.
DETAIL A (STA. 85+41±)
CONTRACT
48" PIPE
6' BURY
INSTALL THIS CONTRACT
48" COTATI - INTERTIE
E. COTATI AVE.
88+55.96 HORIZ.
9.90
88+65.86 HORIZ.
17.47'
18.38'
SHOPPING CENTER
D/W
R.P. CROSS ON TOP OF FIRE HYD.
R.P. CROSS ON N.W. COR. CONC. CURB INLET.
BEVERLY DR.
103+61.86 HORIZ.
9.90
103+71.76 HORIZ.
15.41'
92.00'
R.P. NAIL & SH. ON W. FACE OF END FENCE POST.
R.P. CROSS ON N.W. COR. CONC. CURB INLET AT ROAD STA. 140+40
N.W.P. R.R. SPUR
PETALUMA AQUEDUCT
112+89.53 HORIZ.
R.P. NAIL & SH IN E. FACE OF P. POLE WITH METER.
29.51'
22.38'
R.P. NAIL & SHINER IN TOP OF 3' HIGH ANODE LEAD POST.
100 0 100 200
scale feet
HEAD in ft. 240 220
SPECIALS
WELD JOINTS
PIPE SIZE & TYPE 48" 33" 30" 24" WYE
BEDDING / BACKFILL CLASS A CLASS D
120
110
100
90
MATCH LINE
2" ELEC.
2" GAS
12" WATER
EXISTING GAS
EXISTING GAS
EXISTING GAS
4" WATER TO FIRE HYDRANT
EXISTING 18" RCP - INV. 101.0
ELEC.
EXISTING GAS
4" WATER TO FIRE HYDRANT
EXISTING GAS
EXISTING 2" TEL. & ELEC.
EXISTING GAS
4" PIPE IN SAME TRENCH
EXISTING 18" RCP - INV. 102.5
EXISTING 6" W.
STA. 94+59 INSTALL 2" THREDOLET
℄ ADRIAN DR.
EXISTING GAS
EXISTING 18" RCP - INV. 103.0
EXISTING GAS
EXISTING 18" RCP - INV. 103.0
STA. 98+40± INSTALL 8" T.O.
℄ LANCASTER AV.
EXISTING GAS
EXISTING GAS
EXISTING 18" RCP
EXISTING GAS
EXISTING GAS
EXISTING GAS
℄ BEVERLY DR.
EXISTING 8" WATER
EXISTING GAS
EXISTING 18" RCP - INV. 104.5
EXISTING GAS
EXISTING GAS
EXISTING GAS
EXISTING 18" RCP - INV. 106.0
EXISTING 4" TEL.
2" ¾" GAS
EXISTING GAS
STA. 110+90 INSTALL 2" AIR VALVE TYPE C
℄ NWPRR
℄ SPUR
STA. 112+75 INSTALL 2" AIR VALVE TYPE C
STA. 113+39.16 JUNCT. 0+00 LINE A WYE
END PROJECT
60" CASING
¼" CLEARANCE
2" AV CAPPED
NOTE: SEE DETAIL DWG. NO. 102.309
STA. 84+74
48" RCP
STA. 85+41± INSTALL 8" TURNOUT TYPE B ON TOP OF PIPE A SEE DETAIL A
48" RCP
STA. 88+55.96 HORIZ. DEF. LT. 45°
STA. 88+65.86 HORIZ. DEF. RT. 45°
BOOSTER PIPE CAPPED
EXISTING 12" SS INV. 97.3
12" COVER
STA. 95+65 INSTALL 18" MANHOLE
EXISTING 6" WATER
EXISTING TEL. CABLE
EXISTING 4" TEL.
EXISTING GAS
STA. 103+61.86 HORIZ. DEF. RT. 45°
STA. 103+71.76 HORIZ. DEF. LT. 45°
STA. 111+69.53 ℄ NWPRR
STA. 112+89.53 HORIZ. DEF. RT. 92° 28' 02"
STA. 113+64.66 HORIZ. DEF. LT. 45°
STA. 113+82±
110+00
85+00
90+00
95+00
100+00
105+00
Return to Index
RUSSIAN RIVER - COTATI INTERTIE PROJECT
STA. 84+74 TO STA. 113+82±
SCALE
DATE JULY 6, 1975
APPROVED CHIEF ENGINEER
RE 8271
DRAWN
CHECKED
SONOMA COUNTY WATER AGENCY
DESIGNED
SUBMITTED
DRAWING NUMBER
60-4-102.306
REVISION
DATE
By
AS BUILT

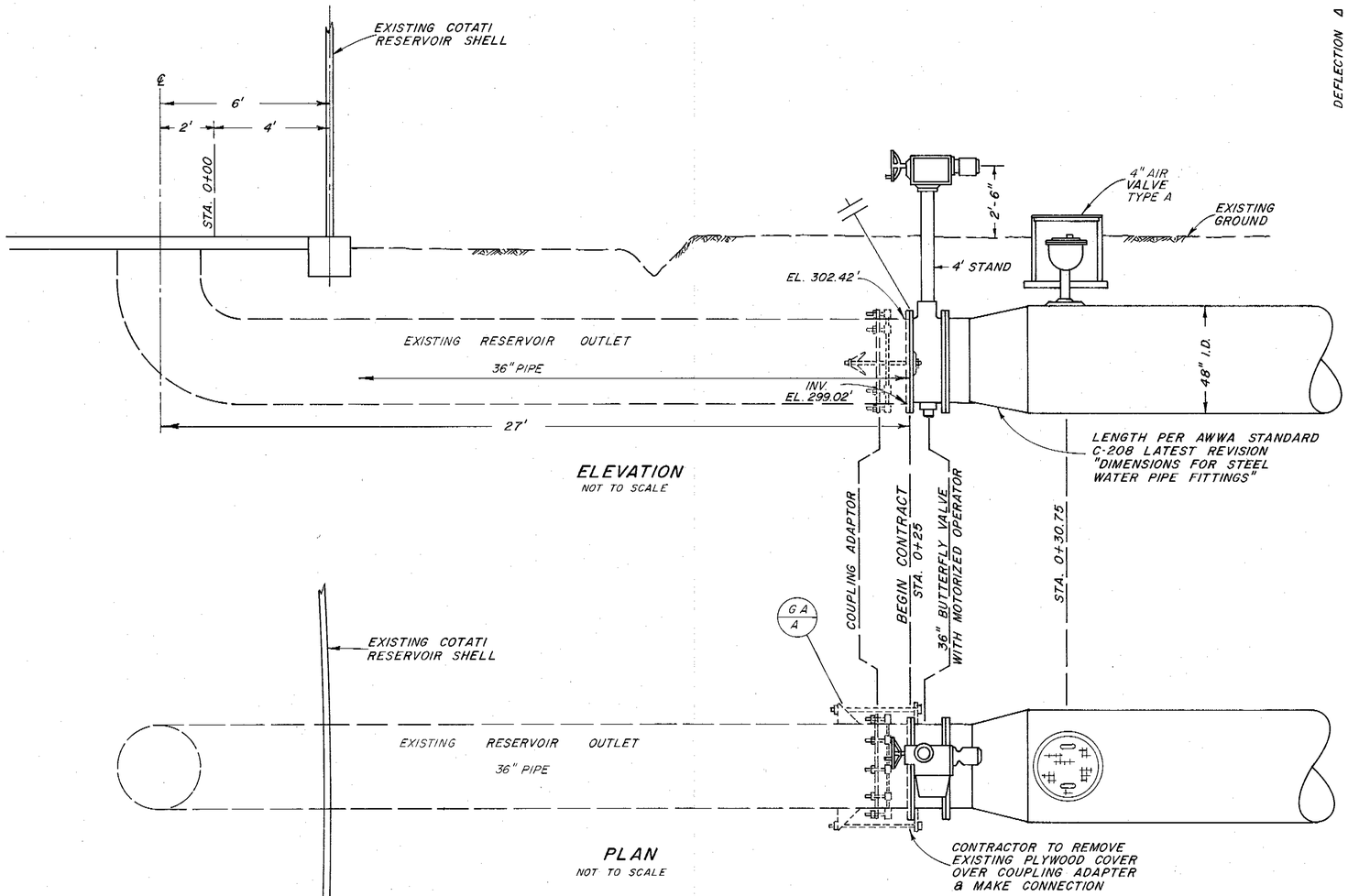

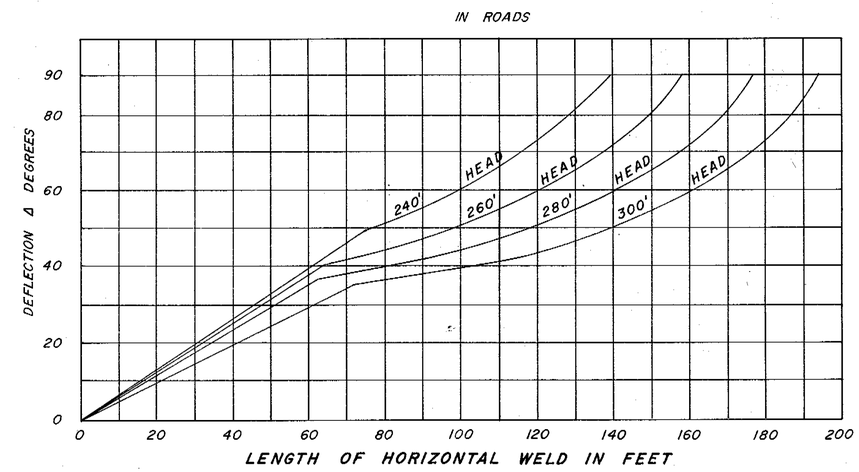

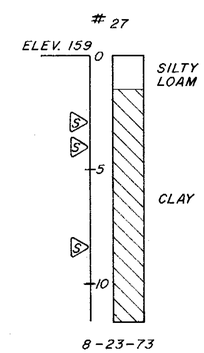

PINE LANE & WEST SIERRA

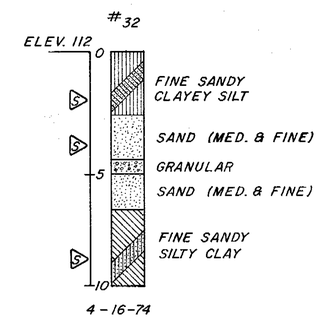

WEST SIERRA
(STA. 56+00)

S DENOTES SAMPLING DEPTHS

Return to Index

No.	DATE	REVISION	By
		AS	
		5-16-77	

RUSSIAN RIVER-COTATI INTERTIE PROJECT
RESERVOIR CONNECTION, LOG OF BORINGS & THRUST WELDS

SCALE: NO SCALE | APPROVED CHIEF ENGINEER | DRAWN S.F.M.
DATE: JULY 7, 1975 | RE 8271 | CHECKED

SONOMA COUNTY WATER AGENCY

DESIGNED R.E. Schuler | SUBMITTED | DRAWING NUMBER 60-4-102.307

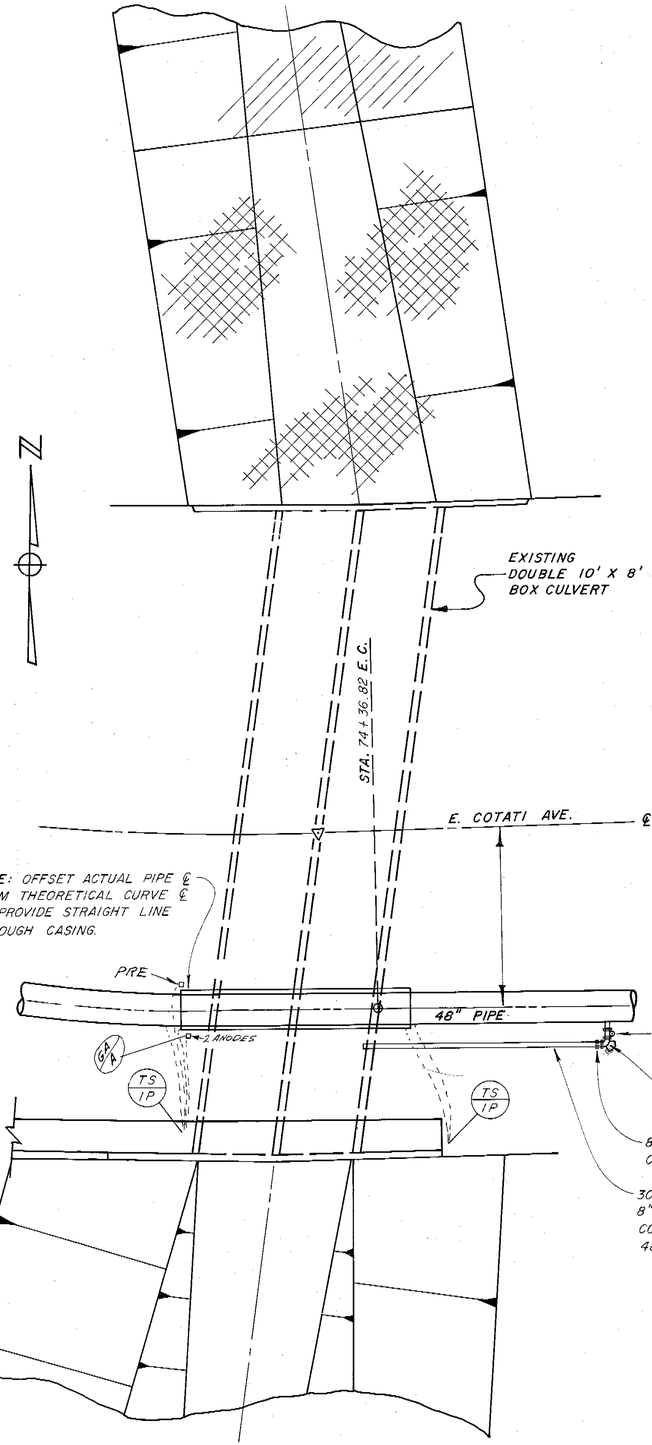

PLAN
SCALE: 1" = 10'

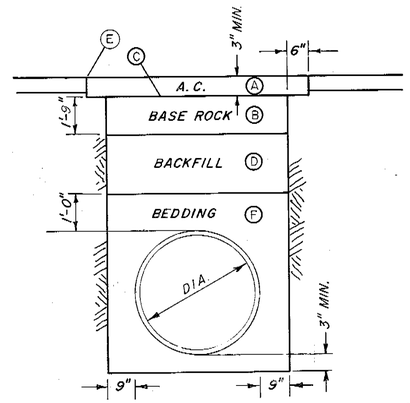

NOT TO SCALE
CLASS A

BEDDING & BACKFILL IN ROAD OR SHOULDER

- (A) REPLACE EXISTING SURFACE WITH ASPHALTIC CONCRETE CONFORMING WITH SECTION 302-5 STD. SPECS.*
- (B) CLASS 2 AGGREGATE BASE CONFORMING WITH SECTION 200-2 STD. SPECS.*
- (C) RS-1 EMULSIFIED ASPHALT
- (D) STRUCTURE BACKFILL MATERIAL COMPACTED TO 95% WITHIN 3' OF FINISHED GRADE, 90% BELOW.
- (E) ROADWAY PAVEMENT TO BE SAW-CUT & REMOVED FOR 6" EACH SIDE OF TRENCH.
- (F) BEDDING CONFORMING WITH THE SPECIAL PROVISION (SAND EQUIVALENT OF 30 OR BETTER) COMPACTED TO 90%.

* THE THICKNESS OF ASPHALTIC CONCRETE AND UNTREATED ROCK BASE SHOWN FOR CLASS "A" BACKFILL AND TRENCH SURFACING ARE THE MINIMUM THICKNESS PERMITTED. WHERE THE EXISTING PAVEMENT AND/OR ROCK BASE IS THICKER THAN THE MINIMUM IT SHALL BE REPLACED TO THE EXISTING THICKNESS. STA. 57+55 TO STA. 112+89 CLASS 2 AGGREGATE BASE SHALL BE 1'-11" THICK.

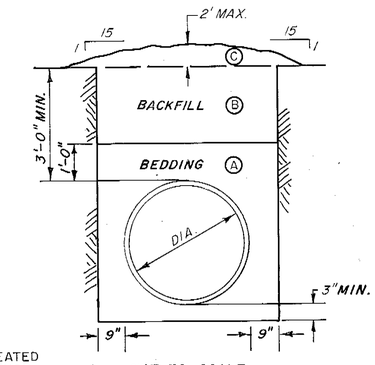

NOT TO SCALE
CLASS D

BEDDING & BACKFILL IN FIELD

- (A) EXCAVATED OR IMPORTED MATERIAL PER SPECIAL PROVISIONS COMPACTED TO 80%.
- (B) BACKFILL: EXCAVATED OR IMPORTED MATERIAL MINIMUM COMPACTION SHALL BE 76%.
- (C) MOUNDING OF NATIVE SPOIL EQUAL TO CONSOLIDATION, EXCEPT AT CROSS SWALES.

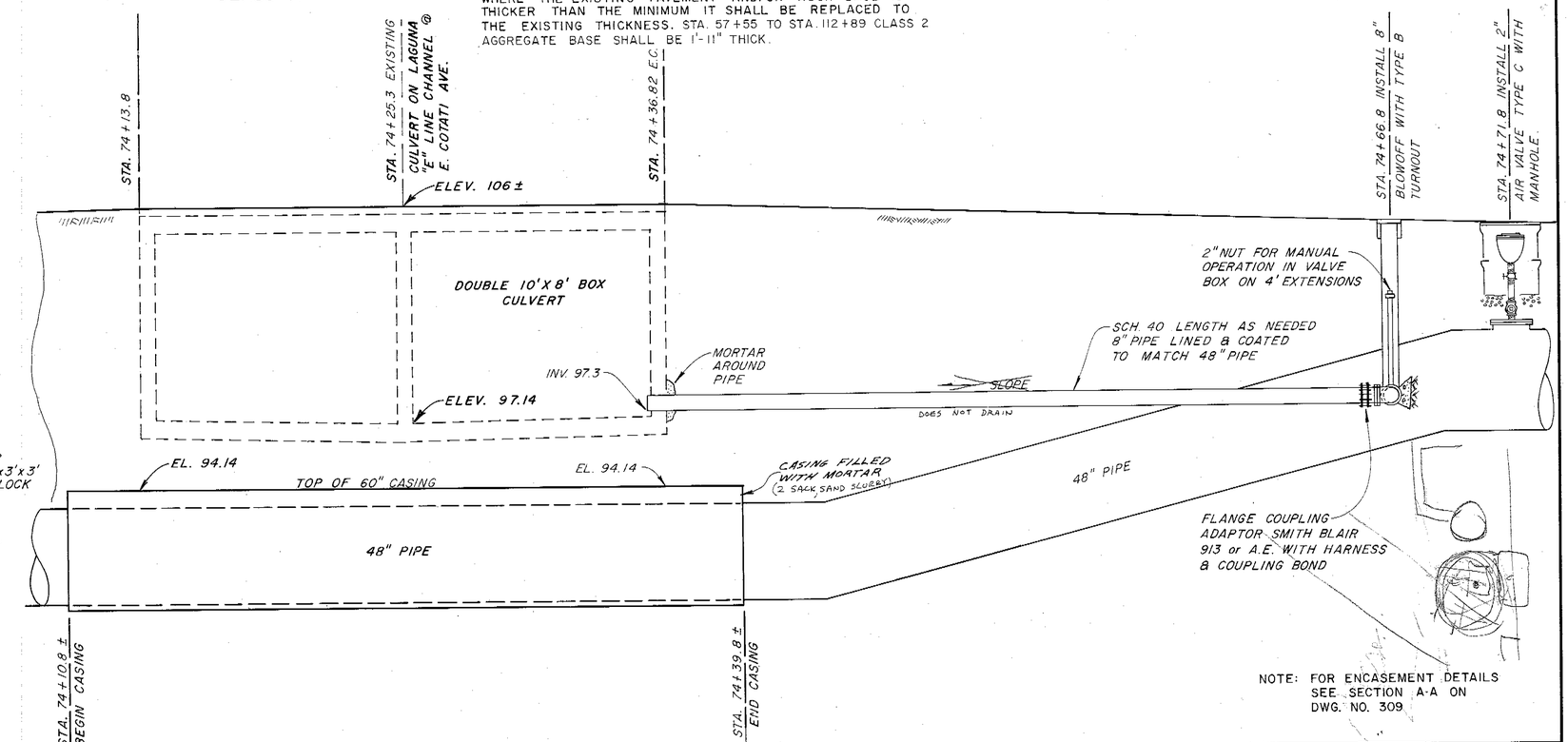

NOTE: FOR ENCASEMENT DETAILS SEE SECTION A-A ON DWG. NO. 309

ELEVATION
SCALE: 1" = 3'

No.	Date	REVISION	By
		AS BUILT 5-16-77	

RUSSIAN RIVER - COTATI INTERTIE PROJECT

BEDDING - BACKFILL & LAGUNA XING

SCALE: AS SHOWN | APPROVED CHIEF ENGINEER | DRAWN sfm
DATE: JULY 8, 1975 | RE 8271 | CHECKED

SONOMA COUNTY WATER AGENCY

DESIGNED | SUBMITTED | DRAWING NUMBER 60-4-102.308

SHEET NO. 8

Return to Index

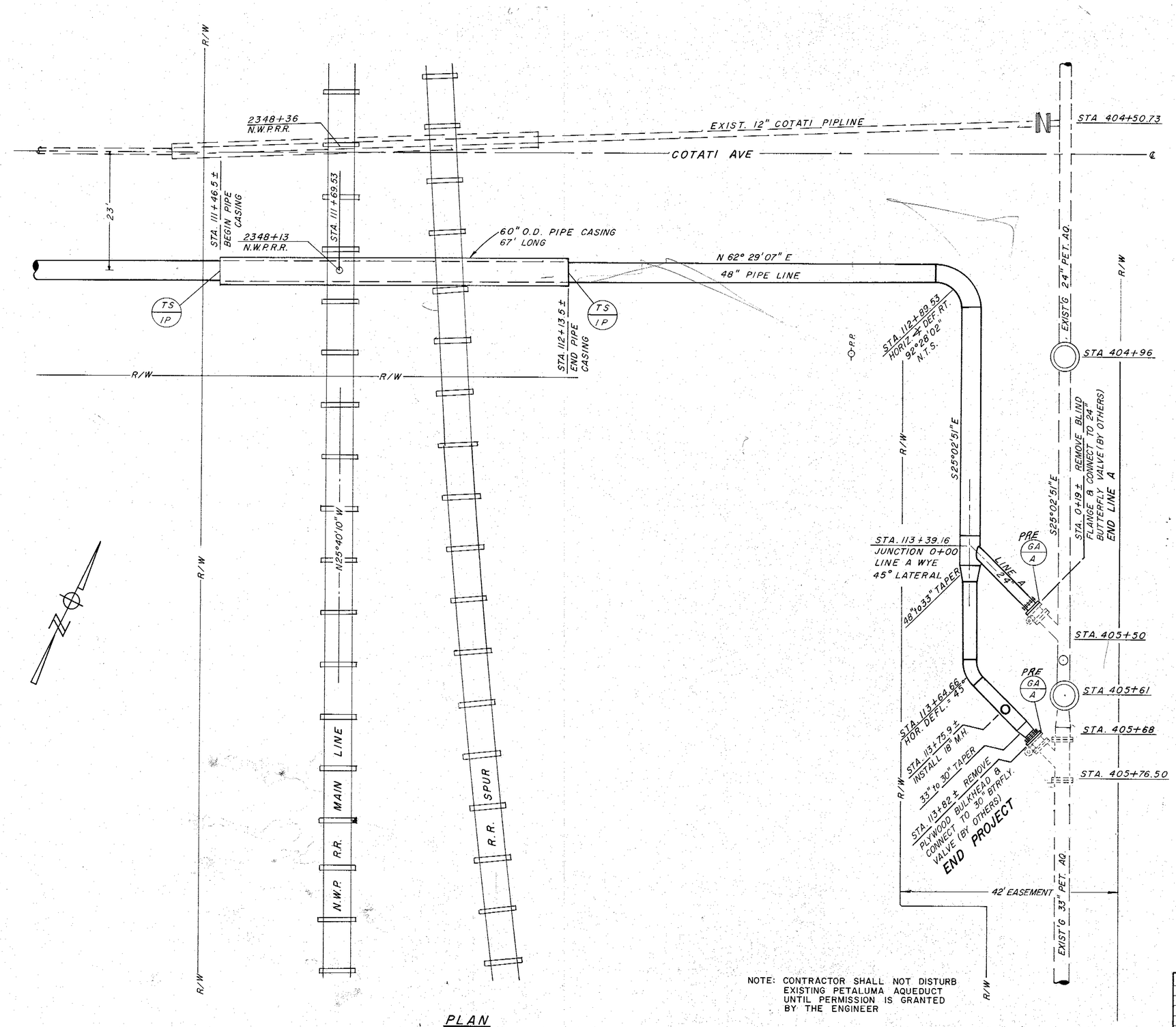

PLAN
SCALE: 1"=10'

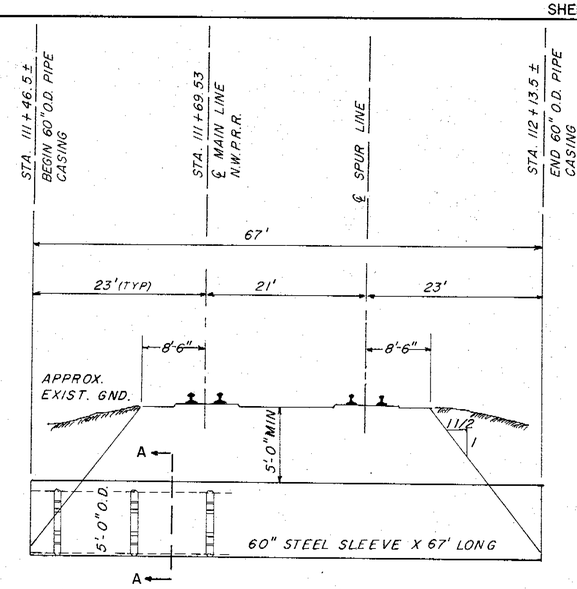

PIPE CASING PROFILE
HORIZ. SCALE: 1"=10'
VERT. SCALE: 1"=5'

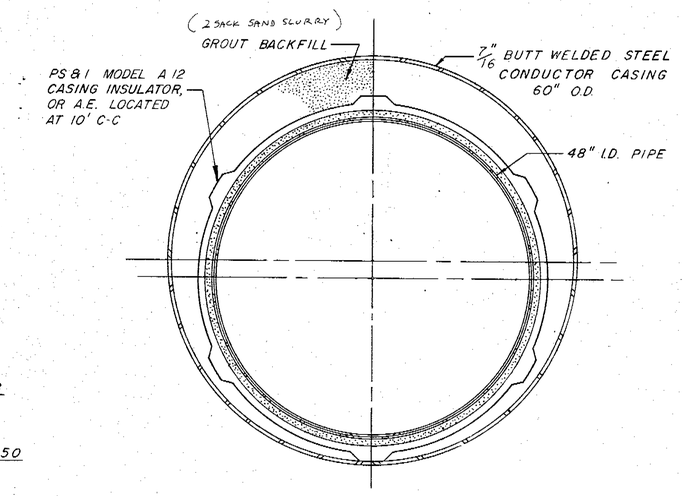

TYPICAL SECTION A-A
STEEL ENCASEMENT
NO SCALE

NOTE: ALL JOINTS OF PIPELINE WITHIN CASING SHALL BE WELDED.

NOTE: CONTRACTOR SHALL NOT DISTURB EXISTING PETALUMA AQUEDUCT UNTIL PERMISSION IS GRANTED BY THE ENGINEER

Return to Index

No.	DATE	REVISION	By
		AS BUILT Date 5-16-77 By: Daniel R. Allen	

RUSSIAN RIVER – COTATI INTERTIE PROJECT

R.R. XING & PET. AQU. CONNECTION

SCALE: AS SHOWN | APPROVED: Gordon W. Mills, CHIEF ENGINEER | DRAWN: sfm
DATE: JULY 9, 1975 | CHECKED: JA

SONOMA COUNTY WATER AGENCY

DESIGNED: R.E. Schuler | SUBMITTED: [signature] | DRAWING NUMBER: 60-4-102.309

SHEET NO. 9

PH 27-4C

MICROFILMED

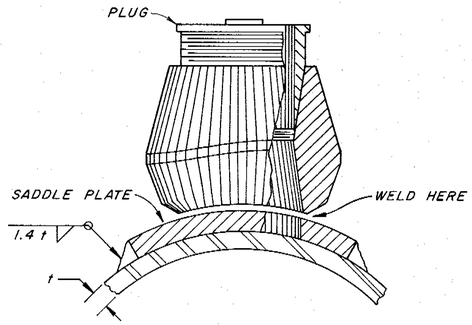

THREDOLET
NO SCALE

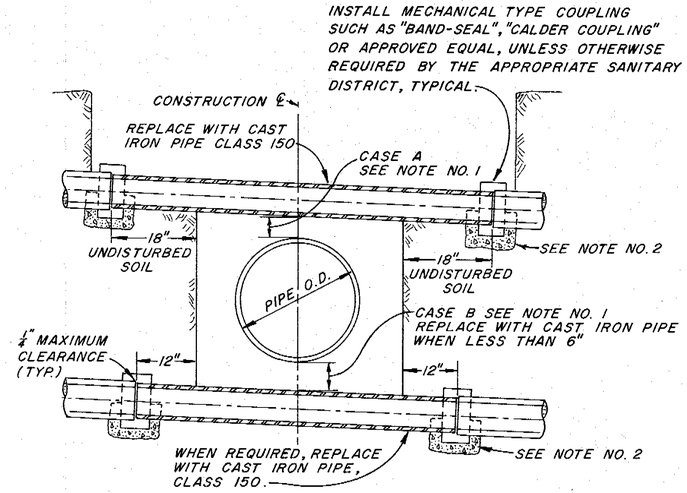

MAIN LINE SEWER

GENERAL NOTES - SEWER

1. PROVIDE MINIMUM CLEARANCE WHEN REQUIRED BY THE APPROPRIATE SANITARY DISTRICT. IF MINIMUM CLEARANCE IS NOT POSSIBLE, THEN USE CASE C OR D.
2. PLACE CLASS 4B 2000 CONCRETE.
3. THE WORK SHALL BE DONE TO THE SATISFACTION AND SPECIFICATIONS OF THE APPROPRIATE SANITARY DISTRICT.
4. ALL PIPES SHALL MATCH INTERNAL DIAMETER OF EXISTING PIPE AND SHALL HAVE A MINIMUM SLOPE OF 1%.
5. ALL BENDS SHALL BE LONG RADIUS BENDS UNLESS SPECIFIED OTHERWISE.
6. ALL PIPES AND FITTINGS SHALL BE FOR SANITARY SEWER SERVICE. CAST IRON SHALL BE CEMENT LINED.
7. REPLACE CONNECTIONS WITH 4" CLASS 2400 A.C.P. SUPPORTED BY 2"x6" REDWOOD BRIDGE ACROSS TRENCH AND MAIN LINE SEWERS WITH CLASS EQUAL TO, OR GREATER THAN EXISTING SEWER PIPE.
8. WHEN REQUIRED TO GO BEYOND PROPERTY LINE TO OBTAIN REQUIRED GRADE, AGENCY WILL OBTAIN RIGHT OF WAY AND CONTRACTOR SHALL RELOCATE SEWER LATERAL.

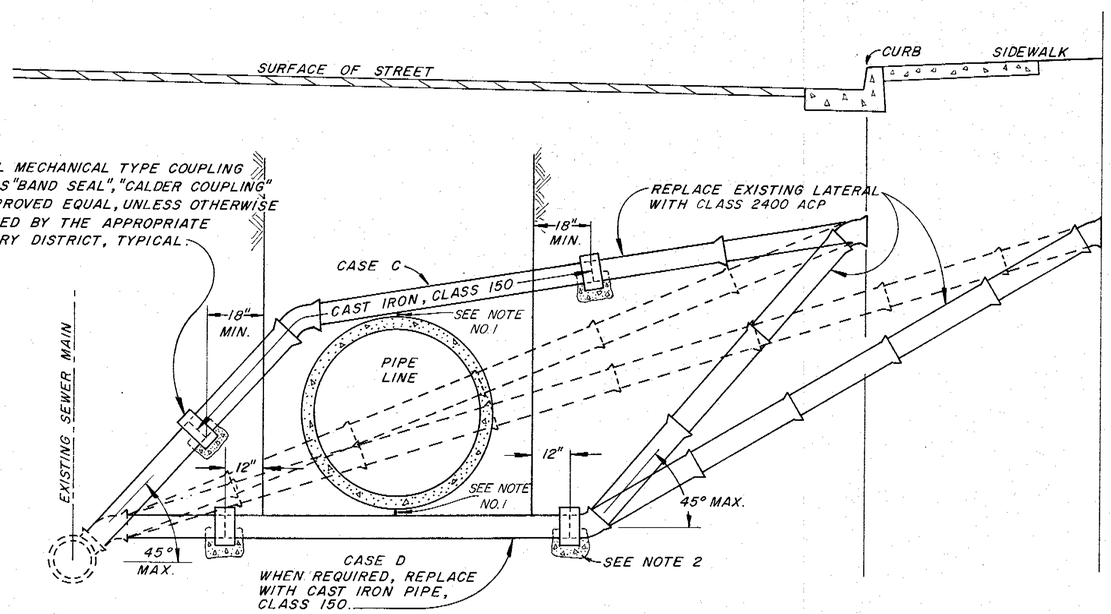

SEWER SERVICE

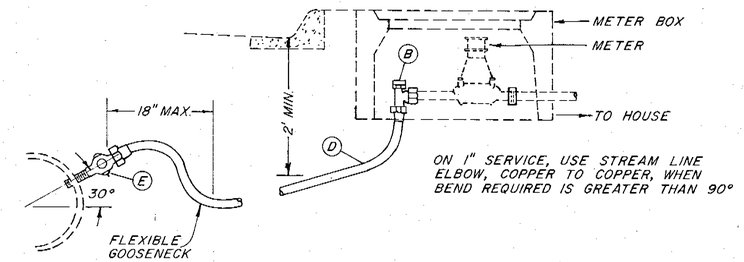

3/4" OR 1" SERVICE

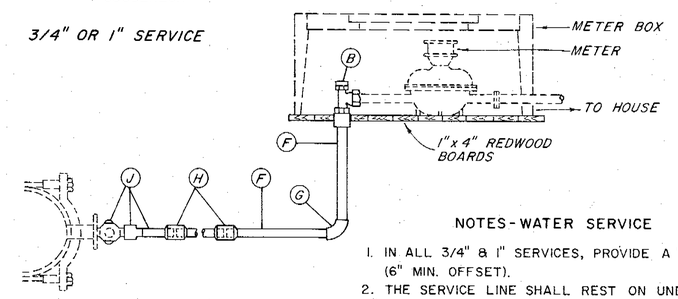

1-1/2" OR 2" SERVICE

NOTES - WATER SERVICE

1. IN ALL 3/4" & 1" SERVICES, PROVIDE A "GOOSENECK" (6" MIN. OFFSET).
2. THE SERVICE LINE SHALL REST ON UNDISTURBED EARTH IN THE BOTTOM OF THE TRENCH WITH A 24" MIN. COVER (BETWEEN MAIN & CURB LINE).
3. COPPER TUBING SHALL CONFORM TO THE REQUIREMENTS OF THE CURRENT A.S.T.M. STANDARD SPECIFICATIONS FOR COPPER WATER TUBE (SERIAL DESIGNATION B88) TYPE K.
4. 3/4" & 1" COPPER PIPE SHALL BE ANNEALED & HAVE A ROCKWELL HARDNESS NOT GREATER THAN 50F. 1-1/2" & 2" SHALL BE DRAWN & HAVE & HARDNESS WITHIN THE RANGE OF 87F TO 97F.

ITEM	MATERIAL	SIZE OF SERVICE			
B	ANGLE METER STOP MUELLER H-14255	3/4"	1"	1-1/2"	2"
D	COPPER PIPE	3/4"	1"		
E	CORPORATION STOP - INCL. TIP NUT	3/4"	1"		
F	COPPER PIPE			1-1/2"	2"
G	STREAM LINE ELBOW - COP. TO COP.			1-1/2"	2"
H	STREAM LINE COUPLING			1-1/2"	2"
J	JOINT COPPER-INCL. COPPER PIPE, CORPORATION STOP & TIP NUT			1-1/2"x24" 1-1/2"x2"	2"x24" 2"

WATER SERVICE

Return to Index

No.	DATE	REVISION	By
		AS BUILT 5-16-77	

RUSSIAN RIVER – COTATI INTERTIE PROJECT

MISCELLANEOUS DETAILS

SCALE: NONE | APPROVED CHIEF ENGINEER | DRAWN L.V.
DATE: JULY 10, 1975 | R.E. 8271 | CHECKED

SONOMA COUNTY WATER AGENCY

DESIGNED R.E. Schuler | SUBMITTED | DRAWING NUMBER 60-4-102.310

SHEET NO. 10

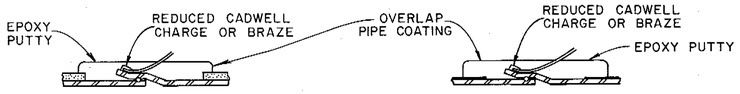

MORTAR COATED STEEL PIPE

COAL TAR COATED STEEL PIPE

CONNECTION DETAILS

ALTERNATE TO CALDWELL PROCESS: CONNECT ANODE LEAD TO BONDING ROD WITH PENN UNION S-2 SPLIT BOLT CONNECTORS.

NOTES-CONNECTION DETAILS

1. WHERE POSSIBLE, SHIFT CONNECTION TO NEAREST PIPE JOINT. ALLOW 12" LOOP AS SLACK AT PIPE CONNECTION.
2. MIX EPOXY PUTTY (EPOXYBOND PLUMBER SEAL) AS DIRECTED & APPLY FIRMLY TO PROVIDE A WATER-TIGHT SEAL AT LEAST 1/4" THICK OVER PIPE COATING. OVERLAP COATING & WIRE INSULATION BY 1/2"

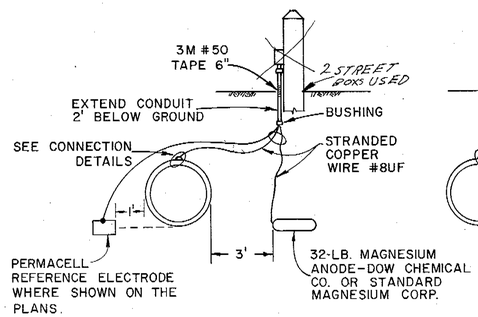

TYPE A GALVANIC ANODE WITH ELECTROLYSIS TEST LEAD INSTALLATION

NOTES-
1. CLEARANCE SHALL NOT BE LESS THAN 3'.
2. TERMINATE LEADS IN CONDUIT TEST OUTLET.
3. ANODE IS TO BE INSTALLED HORIZONTALLY AND SHALL BE LEVEL WITH THE INVERT OF THE PIPE.

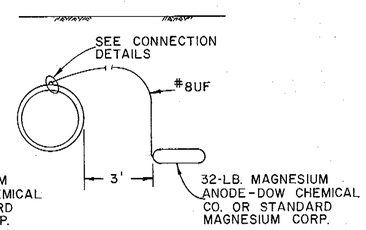

TYPE B GALVANIC ANODE WITHOUT TEST LEAD INSTALLATION

NOTES-
1. ALTERNATE CONNECTION IN RESTRICTED SURFACE ACCESS CONDITIONS

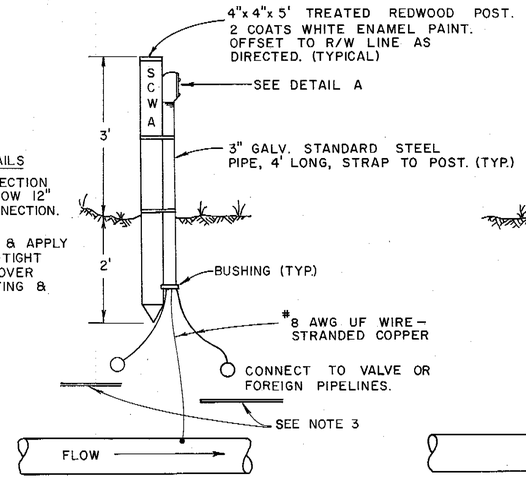

ONE POINT STATION TYPE A

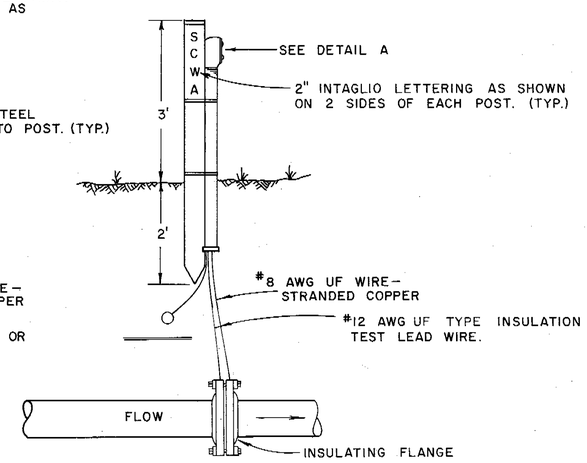

TWO POINT STATION TYPE A

2 AT PETALUMA AQD.
1 AT STA. 39+87

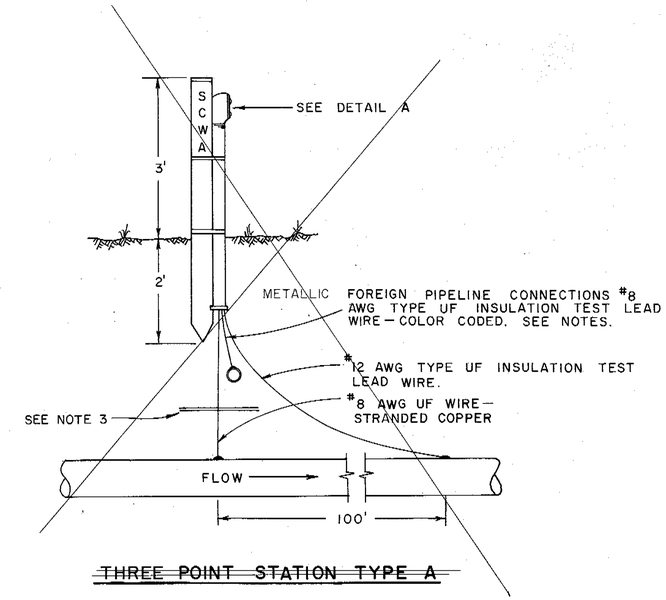

~~THREE POINT STATION TYPE A~~

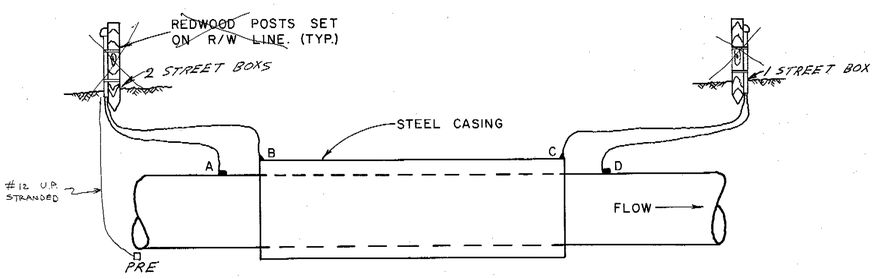

ENCASEMENT STATION

NOTE 1. A AND B-#12 AWG TYPE UF INSULATION TEST LEAD WIRE STRANDED COPPER.
2. C AND D-#8 AWG UF WIRE STRANDED COPPER
3. ENCASEMENT LEADS-YELLOW.

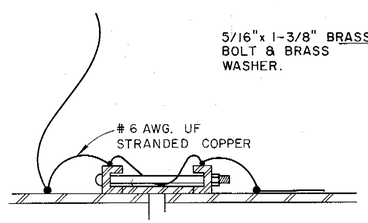

COUPLING BOND

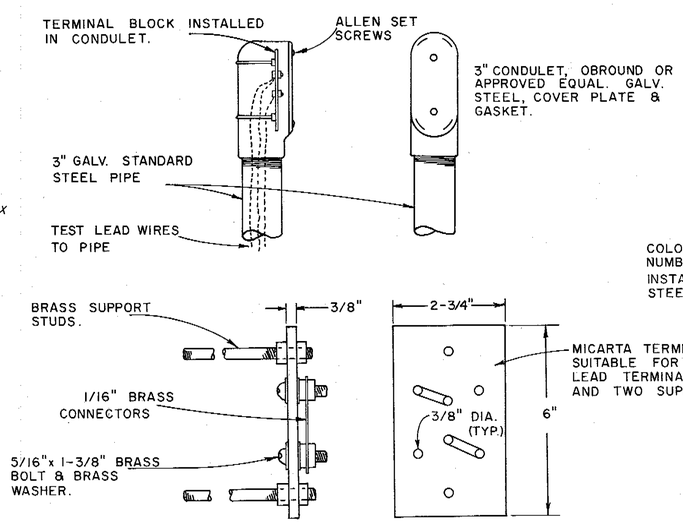

DETAIL A

NOTE: TEST STATION UNIT SHALL BE INSTALLED COMPLETE WITH MICARTA TERMINAL BLOCK, BRASS HARDWARE, CONDULET, COVER & RUBBER GASKET.

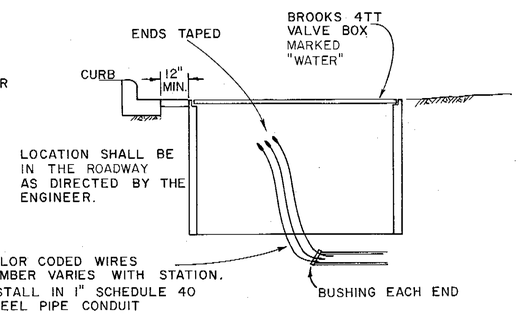

STREET INSTALLATION

NOTES:

1. COLOR CODE:

AQUEDUCT PIPELINE
WHITE - DOWNSTREAM
YELLOW - MIDPOINT
BLACK - UPSTREAM

FOREIGN PIPELINE CROSSINGS
BLUE - GAS
GREEN - WATER
RED - SEWER PRESSURE MAIN
ORANGE - UNIDENTIFIED PIPELINE

TERMINAL POST WASHERS
SHALL BE PAINTED SAME COLOR AS LEAD WIRES.

2. LEAD WIRES
LENGTH AND SIZE OF EACH WIRE SHALL BE MEASURED AND STAMPED ON A METAL TAG AFFIXED TO THE WIRE TERMINAL POST. WHERE UF WIRE IS NOT AVAILABLE IN COLORS, COLOR CODE SHALL BE INDICATED BY COLOR TAPE AT TERMINALS.

3. WHEN CLEARANCE BETWEEN FOREIGN PIPELINE IS LESS THAN 12", INSERT SQUARE SHEET OF LAMINATED PHENOLIC PLASTIC 1/4" THICK WITH LENGTHS EQUAL TO THE O.D. OF THE LARGER PIPE OR 18" WHICH EVER IS LARGER. INSTALL 32 LB. MAGNESIUM ANODE EACH SIDE OF AGENCY PIPELINE PER STREET INSTALLATION DETAIL.
4. NO TEST LEAD CONNECTIONS SHALL BE MADE TO METALLIC FOREIGN PIPELINES. DRAPE 3' OF EXTRA CABLE AT POINT OF CROSSING FOR CONNECTION BY OTHERS.
5. GALVANIC ANODE TYPE-A TO BE INSTALLED AT 2,000' INTERVALS.

No.	DATE	REVISION	By
		AS BUILT Date 5-16-77 By:	

RUSSIAN RIVER COTATI INTERTIE PROJECT
GALVANIC ANODES AND ELECTROLYSIS TEST STATIONS

SCALE: NONE | APPROVED CHIEF ENGINEER | DRAWN STM
DATE: JULY 11, 1975 | CHECKED

SONOMA COUNTY WATER AGENCY

DESIGNED R.E. Schulz | SUBMITTED | DRAWING NUMBER WA-1

SHEET NO. 11

Return to Index

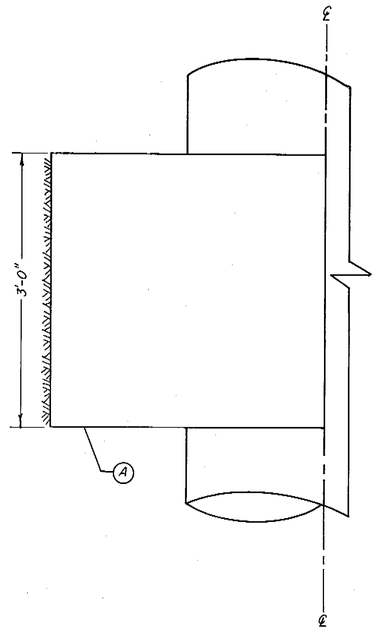

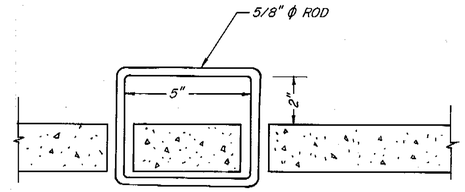

HANDLE DETAIL

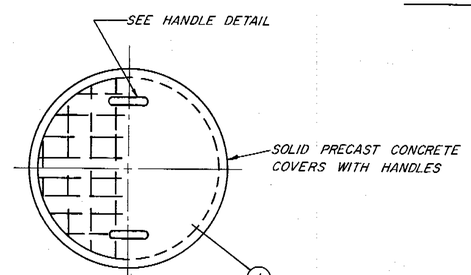

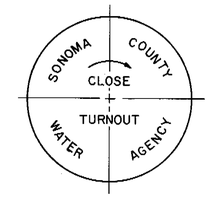

CAST IRON COVER

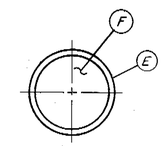

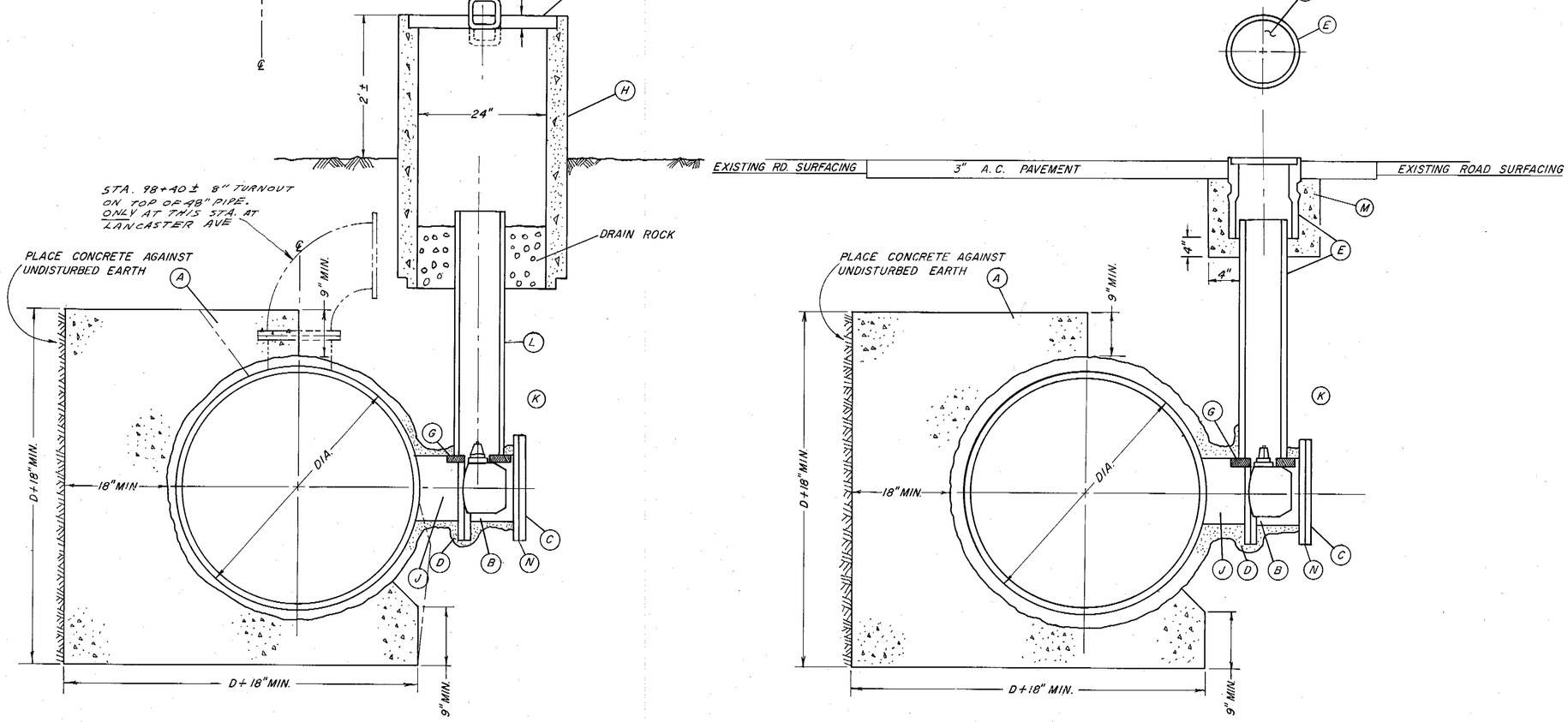

TURNOUT TYPE A

IN AGENCY RIGHT OF WAY

TURNOUT TYPE B

IN ROADWAYS

	DISCRIPTIONS
A	CONCRETE THRUST BLOCK- CLASS 4B2000 - PLAIN CONCRETE
B	BUTTERFLY VALVE W/ OPERATOR FLANGED RUBBER SEAT, SHORT BODY.
C	BLIND FLANGE, PAINT FLANGE AND BOLTS AFTER INSTALLATION WITH COAL TAR EPOXY.
D	PAINT SURFACE WITH BITUMASTIC NO. 50, WRAP WITH 18 GAUGE STUCCO NETTING AND PLASTER WITH 1:3 MIX 1 1/2" THICK.
E	TRAFFIC VALVE BOX W/ CAST IRON COVER BROOKS 3RT 8" ACP OR 12" BROOKS EXTENSIONS, BROOKS PRODUCTS INC. OR APPROVED EQUAL.
F	CAST IRON COVER BROOKS 3RT WITH PRINTING AS SHOWN.
G	DOUBLE 2"X6"X12" REDWOOD BLOCKING NOTCHED TO RECEIVE VALVE STEM. PRECAST CONCRETE BASE 12"X12"X1 1/2" MAY BE SUBSTITUTED.
H	CONCRETE IRRIGATION PIPE 24"X4'0" GROOVE END UP FOR LID.
I	CONCRETE PRECAST LID OF ASBESTOS CEMENT W/ 2 HANDLES 5/8"Ø REINFORCED WITH 6"X6"X10GA. MESH WITH 1/4"Ø ROD AROUND LID EDGE. PRINTING AS SHOWN.
J	TURNOUT TEE TO BE FABRICATED BY PIPE MANUFACTURER. LOCATE 8" MIN. FROM RUBBER GASKET JOINT. COATING SAME AS PIPELINE COATING.
K	SAND BACKFILL TO 12" OVER TOP OF VALVE. CONTINUE BACKFILL AND COMPACTION AS REQUIRED FOR LOCATION
L	8" ACP OR 12" BROOKS EXTENSIONS OR APPROVED EQUAL.
M	CONCRETE PAD CLASS 4B 2000
N	2-POINT TEST STATION REQUIRED WITH INSULATION GASKET. NOT REQUIRED FOR BLIND FLANGE INSTALLATIONS.

NOTES:

1. PRESSURE RATINGS OF EQUIPMENT SHOWN SHALL BE NO LESS THAN THE WORKING PRESSURE (IN FEET OF HEAD) INDICATED ON THE PROFILE DRAWINGS.

No.	Date	REVISION	By
		AS BUILT Date 5-16-72 By:	

RUSSIAN RIVER—COTATI INTERTIE PROJECT

DISTRIBUTION TURNOUTS TYPE A AND TYPE B

SCALE: NONE | APPROVED CHIEF ENGINEER | DRAWN sfm

DATE: JULY 12, 1975 | R.E. 8271 | CHECKED

SONOMA COUNTY WATER AGENCY

DESIGNED | SUBMITTED | DRAWING NUMBER WA-2

Return to Index

PRINT

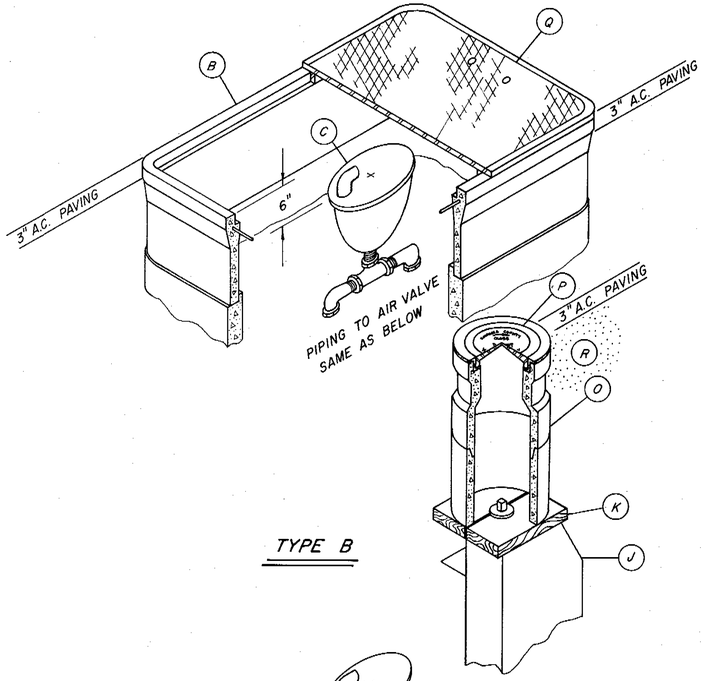

TYPE B

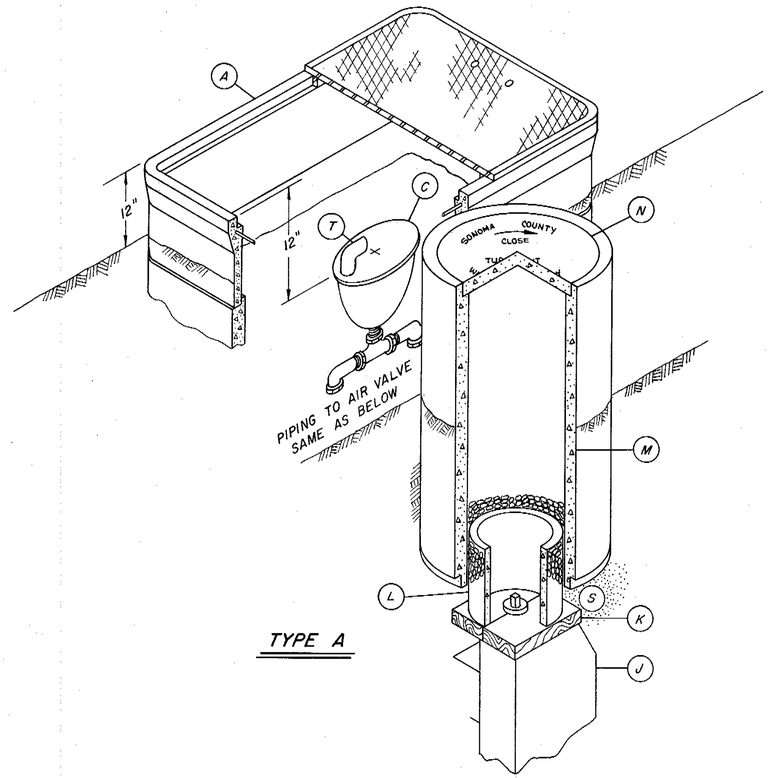

TYPE A

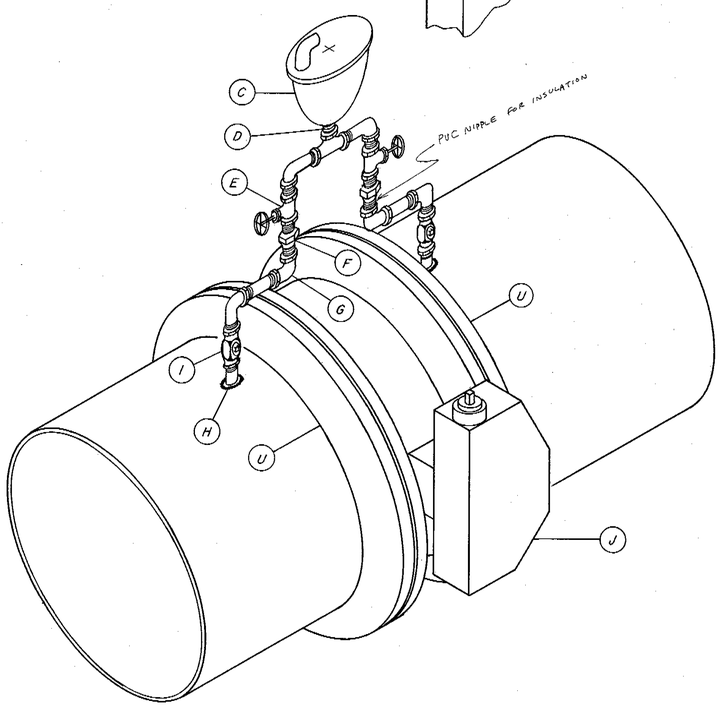

A	METER BOX SERIES 68 BROOKS OR A.E., STACKED WITH NON-TRAFFIC LID WITH SIX 3/4" VENT HOLES EQUALLY SPACED. USE REDWOOD OR CONCRETE SUPPORT BLOCKS (2-2"x6"x24")
B	METER BOX SERIES 68 BROOKS OR A.E., STACKED WITH TRAFFIC LID. USE REDWOOD OR CONCRETE SUPPORT BLOCKS (2-2"x6"x 24")
C	2" AIR VALVE
D	2" CLOSE NIPPLE
E	2"BRONZE GATE VALVE CRANE NO. 472 OR A.E.
F	2" UNION COUPLING
G	2" GALVANIZED ELBOW
H	2" THREDOLET BY PIPE MANUFACTURER.
I	2" CORPORATION STOP, BRONZE BODY CRANE NO.320 OR A.E.
J	MAIN LINE BUTTERFLY VALVE WITH OPERATOR, FLANGED, RUBBER SEAT, SHORT BODY.
K	DOUBLE 2"x6"x12" REDWOOD BLOCKING NOTCHED TO RECEIVE VALVE STEM. PRECAST CONCRETE PADS 12"x12"x1 1/2", MAY BE SUBSTITUTED.
L	8" ACP OR 12" BROOKS EXTENSIONS OR A.E.
M	CONCRETE IRRIGATION PIPE 24"x 4'-0" GROOVE END UP FOR LID.
N	CONCRETE PRECAST LID OF ASBESTOS CEMENT WITH 2 HANDLES 5/8" Ø REINFORCED WITH 6"x 6"x 10" Ga. MESH WITH 1/4" Ø ROD AROUND LID EDGE.
O	TRAFFIC VALVE BOX WITH CAST IRON COVER BROOKS 3 RT 8" ACP OR 12" BROOKS EXTENSIONS, BROOKS PRODUCTS INC. OR A.E.
P	CAST IRON COVER BROOKS 3 RT WITH PRINTING AS SHOWN.
Q	TRAFFIC LID WITH SIX 3/4" DIA. HOLES EQUALLY SPACED.
R	SAND BACKFILL TO MEET SPECIFICATIONS
S	SAND BACKFILL TO 12" OVER TOP OF VALVE. CONTINUE BACKFILL AND COMPACTION AS REQUIRED FOR LOCATION.
T	2" 90° GALVANIZED ELBOW
U	2-POINT TEST STATION PER DWG. WA-1

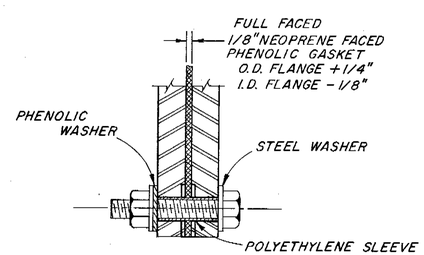

DETAIL
INSULATED FLANGE JOINT
INSTALL AT ONE FLANGE ONLY
(INSTALL INSULATED GASKET SET ONLY WHEN CALLED FOR ON PLAN & PROFILE)

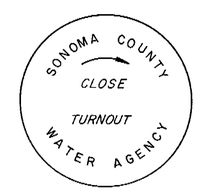

DETAIL FOR WORDING OF CONCRETE & IRON LIDS

NOTES

1. PRESSURE RATINGS OF EQUIPMENT SHOWN SHALL BE NO LESS THAN THE WORKING PRESSURE (IN FEET OF HEAD) INDICATED ON THE PROFILE DRAWINGS.
2. ALL 2". PIPING & FITTINGS SHALL BE GALVANIZED, SCHEDULE 80, UNLESS OTHERWISE SHOWN.

Return to Index

No.	DATE	REVISION	By
		AS BUILT Date 5-16-77	

RUSSIAN RIVER – COTATI INTERTIE PROJECT
MAIN LINE VALVE TYPE A & B

SCALE: NO SCALE
DATE: JULY 13, 1975
APPROVED CHIEF ENGINEER RE 8271
DRAWN sfm
CHECKED
DESIGNED R.E. Schuler
SUBMITTED
DRAWING NUMBER WA-3

SONOMA COUNTY WATER AGENCY

SHEET NO. 13

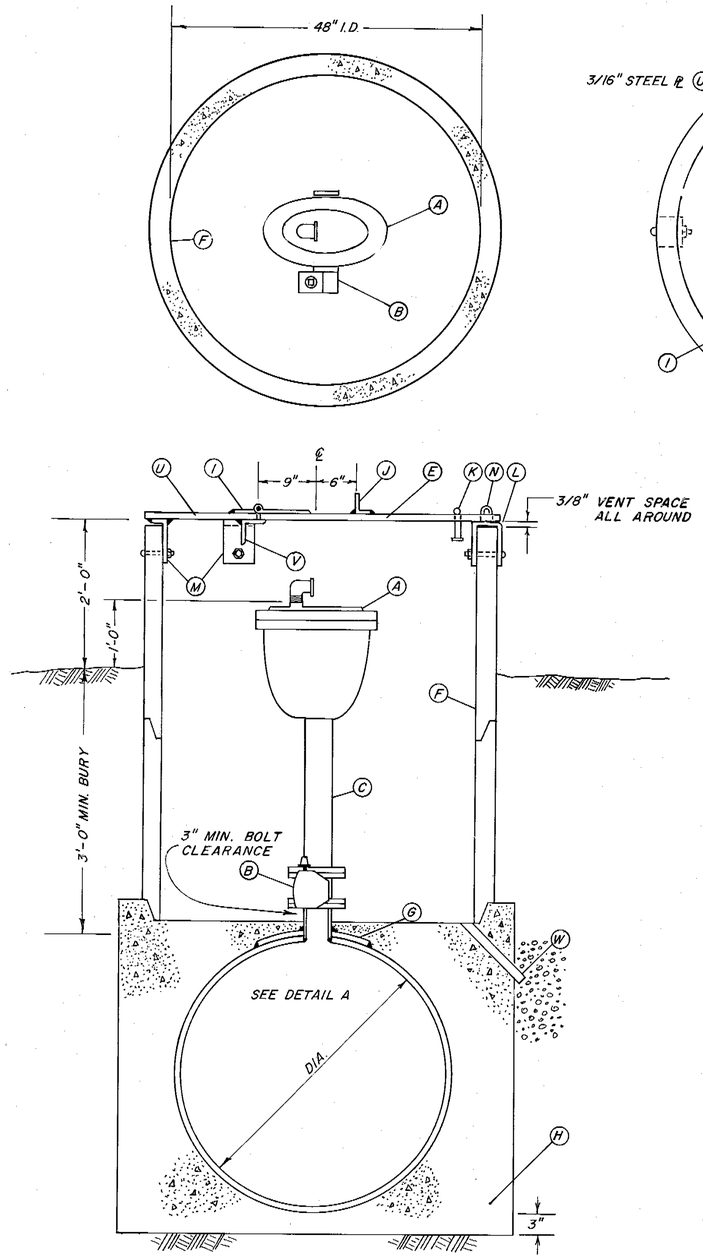

TYPE "A"
AIR VALVE INSTALLATION (4")
WITHOUT MANHOLE
IN AGENCY RIGHT OF WAY

FOR 2" AIR VALVES SEE DETAIL A

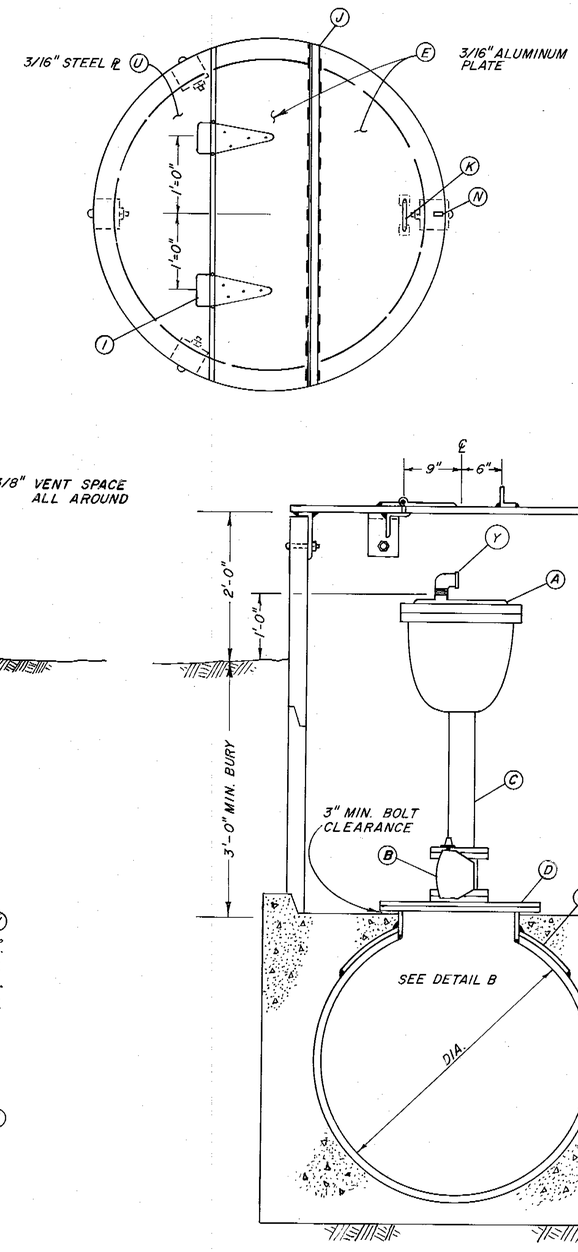

TYPE "B"
AIR VALVE INSTALLATION (4")
WITH MANHOLE
IN AGENCY RIGHT OF WAY

FOR 2" AIR VALVES SEE DETAIL B

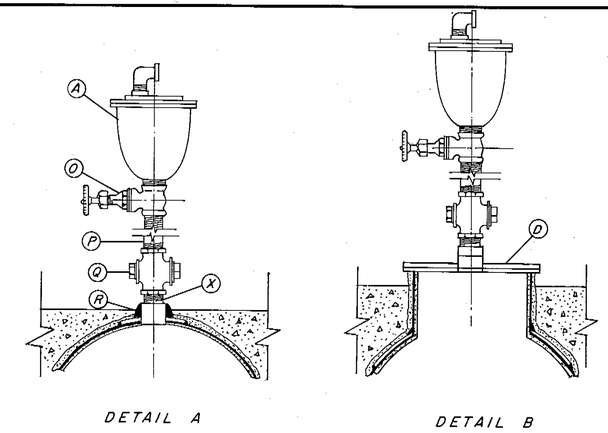

DETAIL A DETAIL B

FOR 2" AIR VALVES
(SAME HOUSING AS 4" REQUIRED)

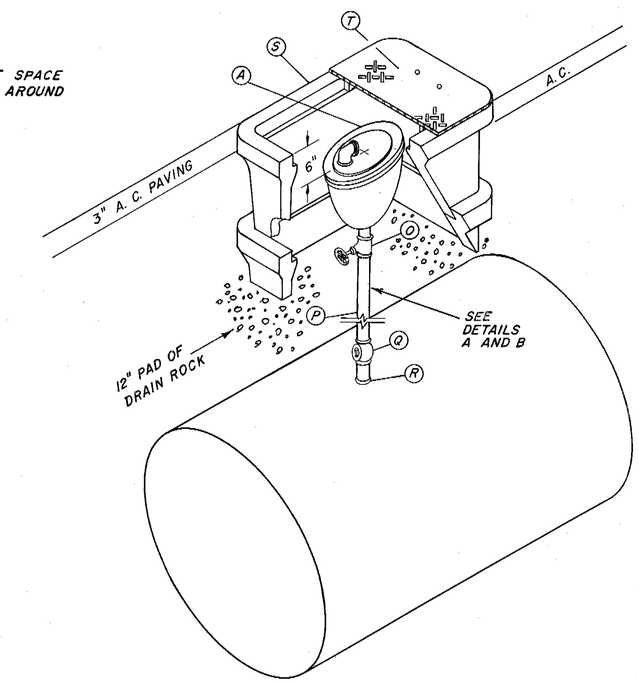

TYPE "C"
AIR VALVE INSTALLATION
FOR ROADWAYS

A	COMBINATION AIR VALVE 2" OR 4" APCO 140 SERIES, OR APPROVED EQUAL.
B	BUTTERFLY VALVE, 4", W/OPERATOR, SHORT BODY, FLANGED, RUBBER SEAT. PRATT – GROUNDHOG B.I.F. MODEL 656, ALLIS-CHALMERS STREAMSEAL OR A.W.W.A. APPROVED OR EQUAL.
C	4" STEEL PIPE WITH S. O. FLANGE
D	18" MANHOLE W/18" S. O. FLANGE & 18" BLIND FLANGE DRILLED & TAPPED FOR 4" OR 2" OUTLET. A.W.W.A. C208 & C207.
E	3/16" ALUM. PLATE FOR PORTION OF COVER.
F	48" I.D. CONCRETE PIPE FOR AIR VALVE INSTALLATION
G	WELD SADDLE PLATE & MANHOLE OR OUTLET SECTION BY PIPE MANUFACTURER. A.W.W.A. C208
H	CLASS 4D2000 CONCRETE 5'X5'X[D+2(9")]
I	8"X4" HEAVY DUTY HINGE, FILLET-WELD TO STEEL PLATE, BOLT TO ALUM. PLATE
J	2-1/2"X1-1/2"X1/4" ALUM. ANGLE, STITCH-WELD 1" ON 4" CENTERS
K	LIFTING HANDLE, 5/8" Ø ROD
L	C 6" LEGS X 3"X1/4"X3" STEEL STIRRUP, BOLT TO PIPE WITH 1/2"X5-1/2" BOLT, ALLOW 3/8" MIN. VENT SPACE BETWEEN COVER & PIPE. WELD HASP STAPLE TO 3" SECTION
M	L 6"X3"X3" BRACKET, BOLT AS IN ITEM L-3 REQUIRED
N	CUT 3/8"X1-3/4" SLOT IN COVER PLATE FOR HASP STAPLE
O	2" BRONZE GATE VALVE, CRANE NO. 488 OR A.E.
P	2" PIPE, SCHEDULE 80
Q	2" BRONZE CORPORATION COCK, CRANE NO. 320
R	2" THREDOLET BY PIPE MANUFACTURER.
S	METER BOX SERIES 38 BROOKS OR APPROVED EQUAL STACKED, WITH TRAFFIC LID. USE REDWOOD OR CONCRETE SUPPORT BLOCKS (2-2"X6"X12")
T	TRAFFIC LID SERIES 38 BROOKS. DRILL 6, 3/4" DIA. HOLES EVENLY SPACED
U	3/16" STEEL PLATE FOR PORTION OF COVER
V	L 3"X3"X1/4"X3'-3" STITCH WELD 1" ON 4" CENTERS
W	2" PLASTIC PIPE FLOOR DRAIN WITH 3 CU. FT. OF DRAIN ROCK
X	NIPPLE, SCHEDULE 80
Y	GALVANIZED ELBOW

NOTES

1. PRESSURE RATINGS OF EQUIPMENT SHOWN SHALL BE NO LESS THAN THE WORKING PRESSURE (IN FEET OF HEAD) INDICATED ON THE PROFILE DRAWINGS
2. ALL PIPING, 4" AND SMALLER, SHALL BE GALVANIZED UNLESS OTHERWISE NOTED

No.	Date	REVISION	By
		AS BUILT Date 5-16-77 By David Bullen	

RUSSIAN RIVER – COTATI INTERTIE PROJECT
AIR VALVE INSTALLATION
TYPE A, B & C

SCALE: NONE | APPROVED CHIEF ENGINEER | DRAWN RM
DATE: JULY 14, 1975 | Walter W Miller RE 8271 | CHECKED
SONOMA COUNTY WATER AGENCY
DESIGNED R.E. Schuler | SUBMITTED | DRAWING NUMBER WA-5

SHEET NO. 14

Return to Index

STEEL SIGN AND POST

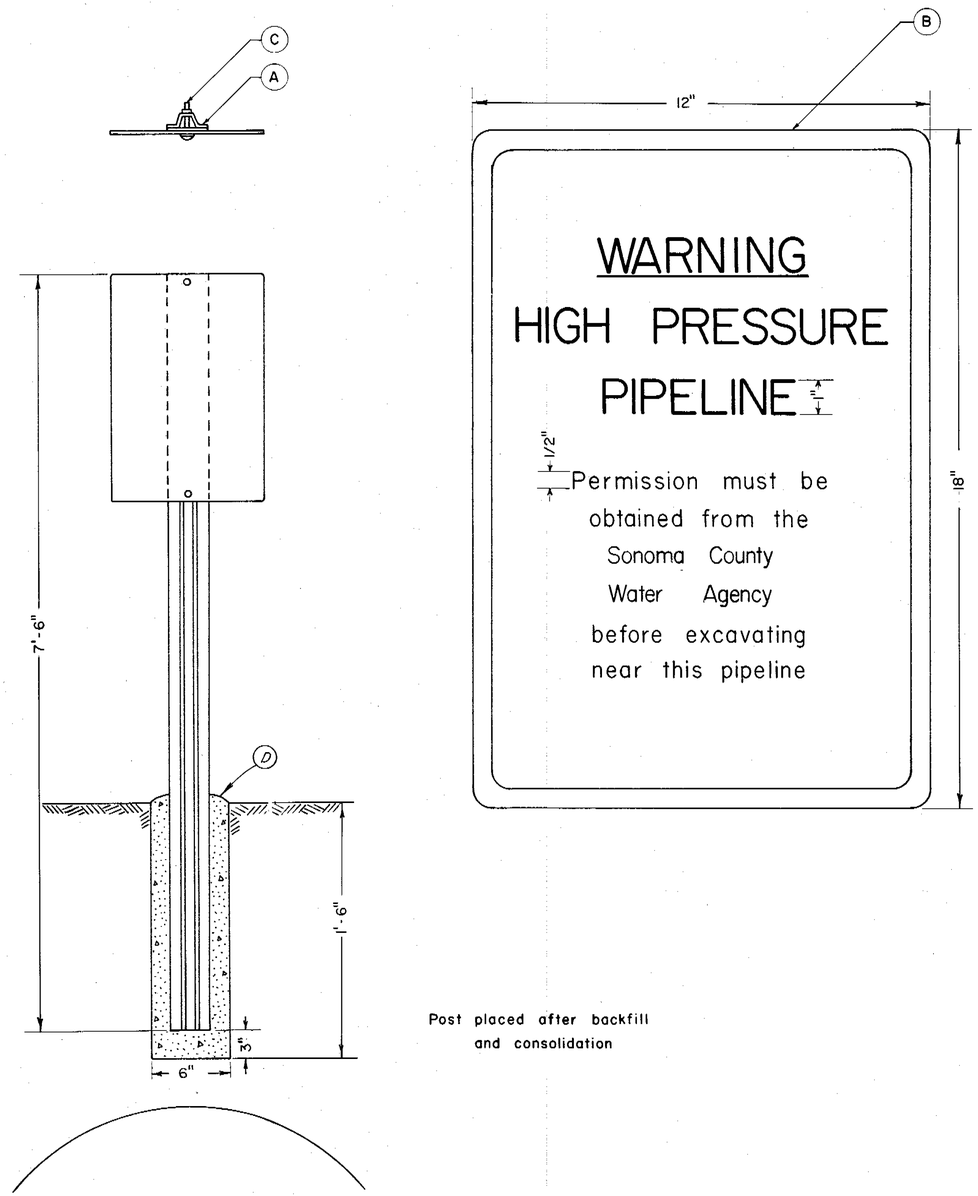

Post placed after backfill and consolidation

D	4-B-2000 concrete footing
C	Two bolts 5/16" x 2 1/4", two 5/16" nuts, two fibre washers, two 1 1/2" x 3" x 1/8" plates
B	Perma sign reflective — 12" x 18", Red on White - Bowman Industries Inc. or A.E.
A	7 1/2' Post — overall width 3 1/16", back thickness 1/8" side thickness .1172", overall depth 1 7/16", flange thickness 1/8", weight 2 lbs. per ft.

Return to Index

No.	DATE	REVISION	By
		AS BUILT Date 5-16-77	

HIGH PRESSURE PIPELINE WARNING SIGN

SCALE: NONE | APPROVED CHIEF ENGINEER | DRAWN SKMc
DATE: JULY 15, 1975 | RE 8271 | CHECKED

SONOMA COUNTY WATER AGENCY

DESIGNED R.E. Schuler | SUBMITTED | DRAWING NUMBER WA-8