PROJECT TITLE RUSSIAN RIVER-COTATI INTERTIE
WOHLER INTERTIE PIPELINE
PIPELINE LAY DWGS, CONTRACT #1, "AS BUILT"

DESCRIPTION 5,820' ± 20" P/S.

SPECIFICATION PROJECT PLANS & SPECIFICATIONS

OWNER SONOMA COUNTY WATER AGENCY

PURCHASER GLANVILLE CONSTRUCTION CO.

ENGINEER SONOMA COUNTY WATER AGENCY

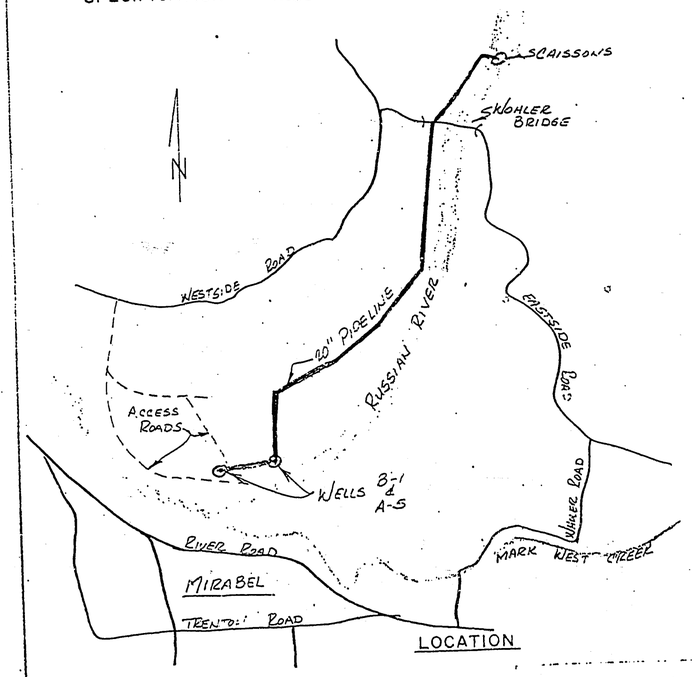

LOCATION

DESCRIPTION	SHEET NO.
JOINT DETAILS	2 & 3
BUYOUT SHEETS	4-7
LAYOUT SHEETS	8-18
DETAIL SHEETS	19-29

APPROVED
By [signature] Date 6-5-72

PRELIMINARY
JUN 1 1972

location Map

NORTHERN CALIFORNIA DIVISION

KW 5-31-72

9100 1.0

60-4-102.128.1

CONTINUED ON 10

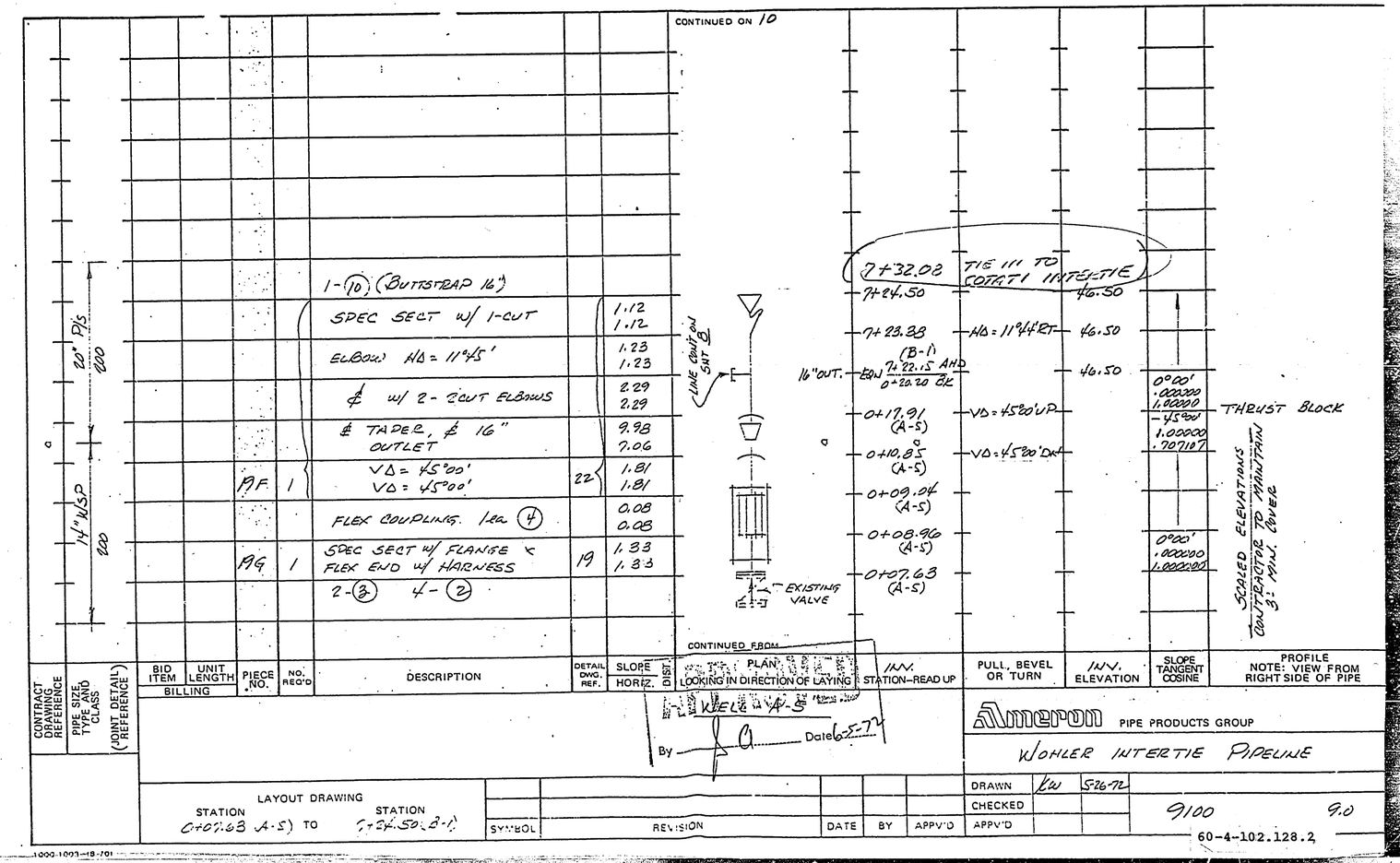

BID ITEM / BILLING	UNIT LENGTH	PIECE NO.	NO. REQ'D	DESCRIPTION	DETAIL DWG. REF.	SLOPE HORIZ.	SLOPE DIST.	PLAN LOOKING IN DIRECTION OF LAYING	INV. STATION–READ UP	PULL, BEVEL OR TURN	INV. ELEVATION	SLOPE TANGENT COSINE	PROFILE NOTE: VIEW FROM RIGHT SIDE OF PIPE
				1-(10) (BUTTSTRAP 16")		1.12			1.12				
				SPEC SECT w/ 1-CUT ELBOW: HΔ = 11°45'		1.23			1.23				
				& w/ 2-CUT ELBOWS		2.29			2.29				
				& TAPER, & 16" OUTLET		9.98			7.06				
		PF	1	VΔ = 45°00' VΔ = 45°00'	22	1.81			1.81				
				FLEX COUPLING. 1 ea (4)		0.08			0.08				
		PG	1	SPEC SECT w/ FLANGE & FLEX END w/ HARNESS	19	1.33			1.33				
				2-(3) 4-(2)									

CONTRACT DRAWING REFERENCE | PIPE SIZE, TYPE AND CLASS | (JOINT DETAIL) REFERENCE

LAYOUT DRAWING
STATION 0+07.63 (A-5) TO STATION 7+24.50 (B-1)

SYMBOL	REVISION	DATE	BY	APPV'D

Ameron PIPE PRODUCTS GROUP

W/OHLER INTERTIE PIPELINE

DRAWN	KW	5-26-72
CHECKED		
APPV'D		

9100 9.0

60-4-102.128.2

1000-1003-15-701

FLAG	ITEM NO.	QUANTITY THIS DWG.	DESCRIPTION	MATERIAL SPECIFICATION
	18	5'-10.14"	21.38"O.D. X 106A CYLINDER	
	14	1	16"O.D. X 21.38"O.D. X 1/4"R X 1'-8" LONG CONCENTRIC TAPER	
	17	1	5/16"R X 26.30" WIDE WRAPPER ROLL TO 10.75" R.	
	21	2'-0"	17.375"O.D. X 106A CYLINDER	
	22	8'-6.80"	16" SCH 10 STEEL PIPE	
	7	2	TENSION LUGS SEE SHT. 6	

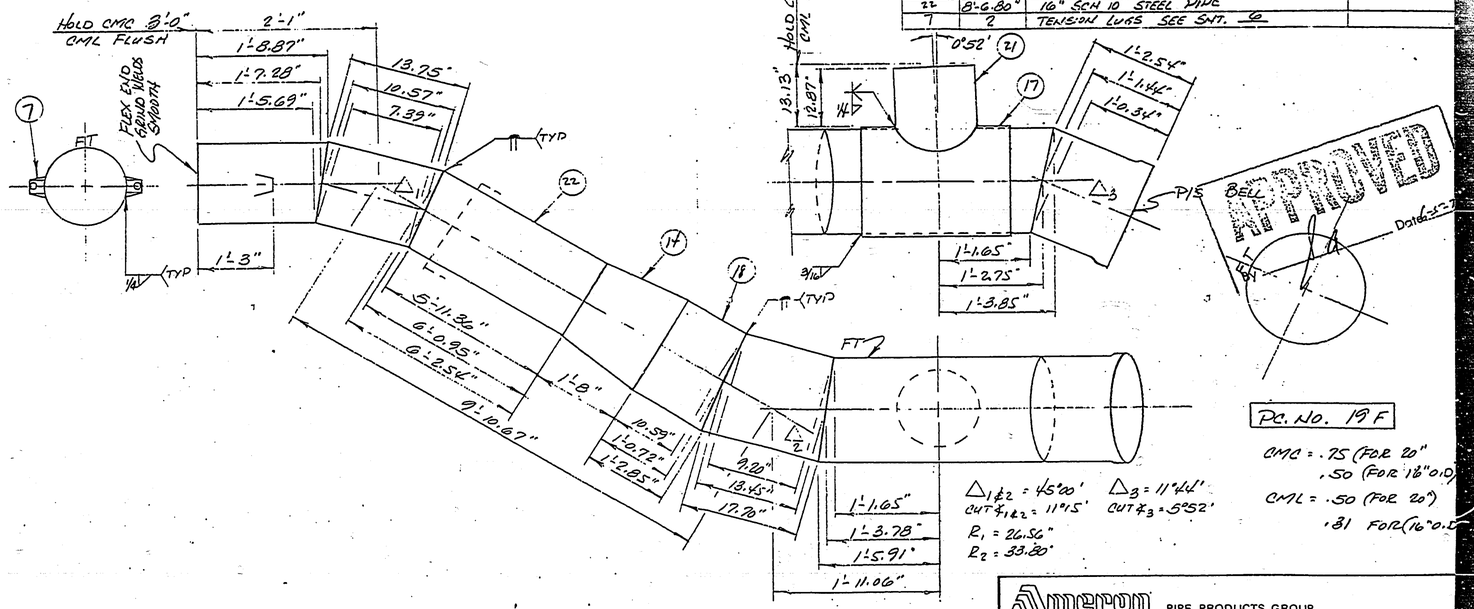

CHANGE ORDERS	SYMBOL	REVISION	DATE	BY	APPV'D

UNLESS OTHERWISE SPECIFIED DIMENSIONS ARE IN INCHES
TOLERANCES

FRACT.	.X	.XX	.XXX	ANGLE
±	±	±	±	±

DWG. SCALE

Ameron PIPE PRODUCTS GROUP

WOHLER INTERTIE PIPELINE

DRAWN	EW	5-31-74
CHECKED		
APPV'D		

9100 22.0

60-4-102.128,3

1000 100mm 8-70

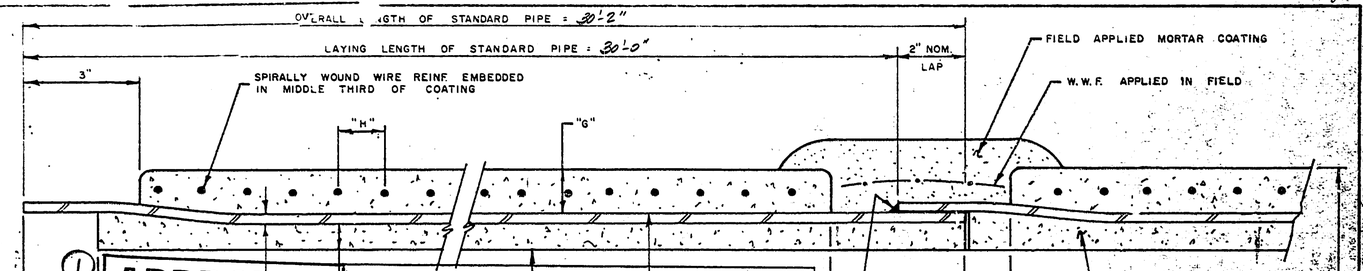

(1) APPROVED
By Hanan Date 1-28-76
SONOMA COUNTY WATER AGENCY

SUBJECT TO CORRECTIONS REQUIRED ON YOUR DWG. NO. 2L1.0, 2L8.0, 2F4.0, 2F7.0, 2F8.0, 2F15.0, 2F17.0, 2F18.0, 2F20.0, 2F33.0, 2B2.0, 2B3.0, 2B4.0, 2B5.0,

RECEIVED DEC 22 1975 SONOMA COUNTY WATER AGENCY

NOTE: BELL I.D. TO SPIGOT O.D. TOLERANCE = .000" TO .120"

(2) DWG. NO. 2L4.0, 2L9.0 & ITS REFERENCES AND 2F10.0 ARE NOT APPROVED; REVISE & RESUBMIT.

MANUFACTURING DATA																INSTALLATION DATA				
				STEEL CYLINDER					LINING & COATING											
NOMINAL PIPE I.D. "A" (IN.)	MAX. PIPE CLASS	BID ITEM	CLASS DESIGNATION	GAGE OR THICKNESS "T"	A_y / FT. (SQ IN)	O.D. CYL "B" (IN)	PLANT TEST PRESSURE (PSI)	CYL. WEIGHT (LB/FT)	WIRE REINF Ø	WIRE SPACING "H" (IN)	WIRE WEIGHT (LB/FT)			NOMINAL LINING THICKNESS "E" (IN)	MIN. COATING THICKNESS "G" (IN)	MAX. PIPE O.D. "I" (IN)	MAX. PULL PER JOINT (ANGLE)	MIN. PULLED RADIUS USING 30 PIPE (FT)	OFFSET IN 30' FOR MAX. PULL (FT)	APPROX WEIGHT OF 30 PIPE (LBS)
20	480		20SC480	3/16	2.25	21.78	491	43.24	15GA	1.25	0.79			.50	.75	23.28	1°55'	897	1.00	4500

PIPE SPECIFICATION: AWWA C 201
CEMENT SPECIFICATION: ASTM C150 TYPE II
WELDING: SEE SHT 3
PLASTIC COVERS REQ'D
MIN STEEL YIELD: = 33,000 PSI

SEE SHT. 2 FOR MARKING OF PIPE

PRELIMINARY
DEC 16 1975

Ameron PIPE PRODUCTS GROUP
RUSSIAN RIVER - COTATI INTERTIE PROJECT

SYMBOL	REVISION	DATE	BY	APPV'D.

DRAWN	LW	12-15-75
CHECKED		
APPV'D.		

2265 8.0

60-4-102.128.4

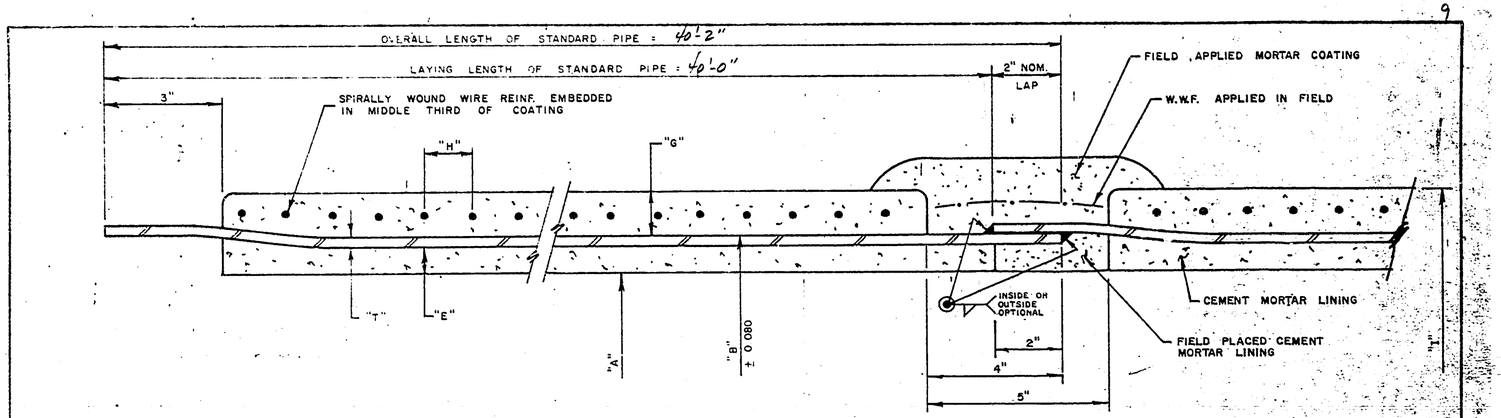

NOTE: BELL I.D. TO SPIGOT O.D.
TOLERANCE = .000" TO .120"

	MANUFACTURING DATA																INSTALLATION DATA				
					STEEL CYLINDER					LINING & COATING											
	NOMINAL PIPE I.D. "A" (IN.)	MAX PIPE CLASS	BID ITEM	CLASS DESIGNATION	GAGE OR THICKNESS "T"	A_y / FT SQ IN	O.D. CYL. "B" (IN.)	PLANT TEST PRESSURE (PSI)	CYL. WEIGHT (LB/FT)	WIRE REINF. Ø	WIRE SPACING "H" (IN)	WIRE WEIGHT (LB/FT)			NOMINAL LINING THICKNESS "E" (IN)	MIN. COATING THICKNESS "G" (IN)	MAX. PIPE O.D. "I" (IN)	MAX. PULL PER JOINT (ANGLE)	MIN. PULLED RADIUS USING 40 PIPE (FT)	OFFSET IN 40 FOR MAX. PULL (FT)	APPROX. WEIGHT OF 40 PIPE (LBS)
I4	30	500	[illegible]	30 SC 500	8GA	1.97	31.875	372	55.60	15GA.	1.25	1.14			.75	.75	33.38	1°45'	1296	1.24	8500
2757	42	500	[illegible]	42 SC 500	5/16	3.75	43.875	405	145.39	15GA.	1.25	1.17			.63	.75	45.38	1°16'	1776	0.90	14450

PIPE SPECIFICATION: AWWA C201
CEMENT SPECIFICATION: ASTM C150 TYPE II
MIN STEEL YIELD: 33,000 PSI -42" 42,000 PSI -30"
WELDING: SEE SHT 3
PLASTIC COVERS REQD

SEE SHT. 2 FOR MARKING OF PIPE

Ameron PIPE PRODUCTS GROUP

RUSSIAN RIVER - COTATI INTERTIE PROJECT

SYMBOL	REVISION	DATE	BY	APPV'D.

DRAWN	KW	12-15-75
CHECKED		
APPV'D.		

2265 9.0

60-4-102.128.5

1000 1004 R 70

CONTRACT # 1 OFFICE

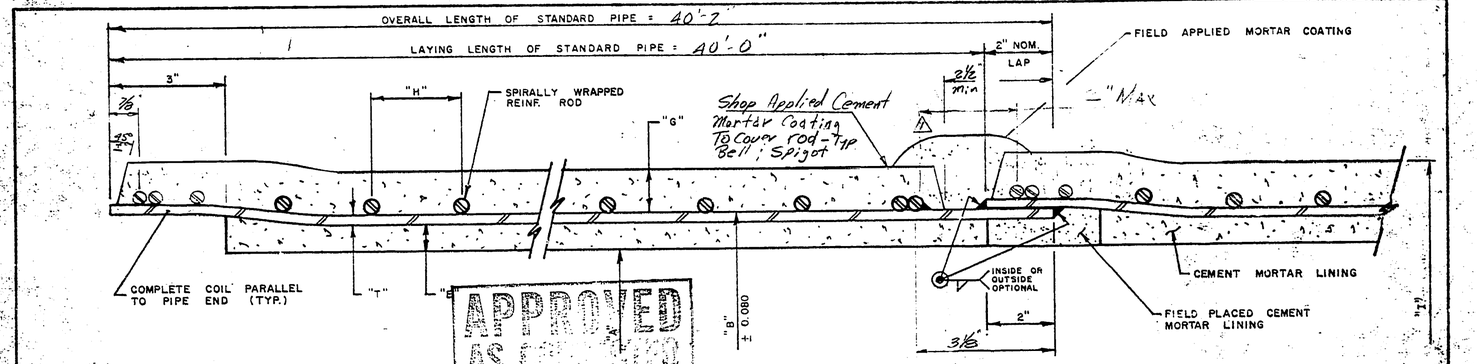

APPROVED AS CONSTRUCTED
By [signature] 4-2-76
SONOMA COUNTY WATER AGENCY

PRELIMINARY
MAR 30 1976

NOTE: BELL I.D. TO SPIGOT O.D. TOLERANCE = .000" TO .120"

MANUFACTURING DATA																INSTALLATION DATA				
				STEEL CYLINDER					LINING & COATING											
NOMINAL PIPE I.D. "A" (IN.)	PIPE CLASS	Class Designation	TOTAL A_t / FT. (SQ IN)	GAGE OR THICKNESS "T"	A_t / FT. (SQ IN)	O.D. CYL. "B" (IN.)	PLANT TEST PRESSURE (PSI)	CYL. WEIGHT (LB/FT)	ROD DIAM. (IN.)	A_s / FT. (SQ IN)	SPACING C-C "H" (IN)	COILS PER FT. (NO)	ROD WT. (LB/FT)	NOMINAL LINING THICKNESS "E" (IN)	MIN. COATING THICKNESS "G" (IN)	MAX. PIPE O.D. "I" (IN)	MAX. PULL PER JOINT (ANGLE)	MIN. PULLED RADIUS USING 40 PIPE (FT)	OFFSET IN 40 FOR MAX. PULL (FT)	APPROX WEIGHT OF 40 PIPE (LBS)
30	500	30PT500	2.49	8ga	1.97	31.875	230 △1	55.60	5/16	.52	1.77	6.78	14.50	.75	1 1/16	34.33	1°45'	1296	1.24	9300
							f_s = 22057 psi OK													

PIPE SPECIFICATION: AWWA C303
CEMENT SPECIFICATION: ASTM C150 TYPE II
Min Steel Yield: 33,000 PSI
Welding: See Sht 3
Plastic Covers Req'd

See Sht 2 For Marking of Pipe

Ameron PIPE PRODUCTS GROUP
RUSSIAN RIVER-COTATI INTERTIE PROJECT

SYMBOL	REVISION	DATE	BY	APPV'D.
△1	Revise rod location CMC Holdback Test Pressure	3/29/76	RS	

DRAWN	RB	3/24/76
CHECKED		
APPV'D.		

2314 10.1

60-4-102.128.6

1000 1004 (8/70)

60-4-102.103

30 PT SDO (Beg) — 30 SC STD | 30 PT SDO (Beg) — 30 SC STD (Beg)

BID ITEM BILLING	UNIT LENGTH	PIECE NO.	NO. REQ'D	DESCRIPTION	DETAIL DWG. REF.	SLOPE HORIZ.	DIST.	PLAN LOOKING IN DIRECTION OF LAYING	INV. STATION—READ UP	PULL, BEVEL OR TURN	INV. ELEVATION	SLOPE TANGENT COSINE	PROFILE NOTE: VIEW FROM RIGHT SIDE OF PIPE
002		317 316	2	STD SECT.			80.00 80.00	CONTINUED ON 2L2	7+20.50 △				
002		315	1	SPEC w/ 2" PASSHOLE 1-(217)	2Sht		40.00 40.00	2" PASSHOLE	6+40.50 6+38.50		34.83		
		314	1	STD SECT	10		40.00 40.00		6+00.50		34.82		
				SPEC 1-CUT ELBOW			21.88 21.88		5+60.50		34.82		
		313	1	14°LT	2FS		18.12 18.12		5+38.62	14"47'LT	34.82		
		312 311 310 309 308		308 309 310 311 312			200.00 200.00		5+20.50		34.81		
		308	5	STD SECT	10								
		307	1	SPEC w/ 2" PASSHOLE 1-(217)	2Sht		40.00 40.00		3+20.50		34.79		
		306		303 304 305 306			160.00 160.00	2" PASSHOLE	3+18.50 2+80.50		34.78		
		305	4	STD SECT	10				1+20.50		34.76		
				SPEC 2-CUT ELBOW			38.09 38.09		0+82.41	45°00'LT	34.76		
		302	1	45°00'	2FS		2.07 2.07		0+80.34		34.76		
		301	1	STD SECT	9		40.00 40.00		0+40.34		34.76		
		300	1	SPEC w/ FCA END	2Sht		40.17 40.17		0+00.17		34.75	0321' .000124 1.000000	
				30" FCA w/ STUDS & NUTS 1-(249)	2B1		0.32 0.32	OK	0-00.15		34.75		
								EXISTING PIPE CONTINUED FROM					

RECEIVED MAR 25 1976 SONOMA COUNTY WATER AGENCY

REVISED MAR 24 1976

APPROVED FEB 2 1976

DESCRIPTION CHECKED By Hanan 4-27-76 SONOMA COUNTY WATER AGENCY

△3 Change Pipe Designation, STA. No. of Pipe 3 to 4 per PCB

SYMBOL	REVISION	DATE	BY	APPV'D.
2	ADDED STUDS & NUTS TO FCA	3-2-76	KW	
1	CORRECTED STATION	2-2-76	KW	

LAYOUT DRAWING STATION 0+00.00 TO STATION 6+40.50

Ameron UTILITY PRODUCTS GROUP

RUSSIAN RIVER - CONTRACT #1

DRAWN	KW	12-1-75
CHECKED		
APPV'D.		

0206 2314 0113

60-4-102.128.7

1000-1003 (7/75)

CONTINUED ON 213

60-4-102.103

4251 STD 4% ℄ (400) — 305 STD 500 ℄ 84 (300)

CONTRACT DRAWING REFERENCE	PIPE SIZE, TYPE AND CLASS (JOINT DETAIL REFERENCE)	BID ITEM	UNIT LENGTH	PIECE NO.	NO. REQ'D	DESCRIPTION	DETAIL DWG. REF.	SLOPE HORIZ.	DIST.	PLAN LOOKING IN DIRECTION OF LAYING	INV. STATION—READ UP	PULL, BEVEL OR TURN	INV. ELEVATION	SLOPE TANGENT COSINE	PROFILE NOTE: VIEW FROM RIGHT SIDE OF PIPE
		BILLING													
		004		334	1	SPEC 1-CUT ELBOW					14+02.59		34.42		
						23°50'	2846				13+86.28	23°50' LT	34.42		
				333	3	STD SECT	9				13+62.59		34.42		
				331							12+42.59		34.40		
				330	1	SPEC w/ 2" PASSHOLE 1-(21)	0851			2" P.H.	12+40.59				
				329		325 326 327 328 329					12+02.59		34.40		
				325	5	STD SECT	9				10+02.57		34.37		
						SPEC 1-CUT ELBOW					9+68.79	13°31' LT	34.37		
				324	1	13°31'	0846				9+62.59		34.37		
				323	1	STD SECT	9				9+22.59		34.36		
			4003			SPEC w/ REDUCER					9+19.09		34.36		
		002	33.91	322	1	℄ 30" WYE ℄ 2" PASSHOLE 1-(21)	2533			2" P.H.	9+10.00 8+80.50		34.84		
				321		319 320 321 318									
				318	4	STD SECT	9				7+20.50		34.83	.001' .00012℄ 1.00000	

LINE CONTINUED ON SHT. 11X

CONTINUED FROM 211

ENGINEERING DEPARTMENT RECEIVED
By Hansen Date 4-2-76
SONOMA COUNTY WATER AGENCY

RECEIVED MAR 25 1976 SONOMA COUNTY WATER AGENCY

MAR 2

APPROVED FEB 2 1976

Ameron UTILITY PRODUCTS GROUP

RUSSIAN RIVER – CONTRACT #1

LAYOUT DRAWING STATION 6+40.50 TO STATION 14+02.59

SYMBOL	REVISION	DATE	BY	APP'D.
1	Change STA. No. of pipe	3/29/76	RB	

DRAWN KD 12-1-75
CHECKED
APPV'D.

~~4205~~ 2314 212.1

60-4-102.128.8

1000-1003 (7/75)

CONTRACT DRAWING REFERENCE	PIPE SIZE, TYPE AND CLASS	(JOINT DETAIL) REFERENCE	BID ITEM	UNIT LENGTH (BILLING)	PIECE NO.	NO. REQ'D	DESCRIPTION	DETAIL DWG. REF.	SLOPE HORIZ.	DIST.	PLAN LOOKING IN DIRECTION OF LAYING	INV. STATION—READ UP	PULL, BEVEL OR TURN	INV. ELEVATION	SLOPE TANGENT COSINE	PROFILE NOTE: VIEW FROM RIGHT SIDE OF PIPE
60-4-102.103	42.50.500 Std. (180)		004	+005												
					349	1	SPEC 5-CUT ELBOW w/ B.S. BELL 94°39'	DF9				5.31 5.31				
					348 347	2	STD SECT	9				28.94 28.94				
												80.00 80.00				
					346	1	SPEC 1-CUT ELBOW 24°12'	DF4				34.68 34.68				
					345	1	SPEC w/ 2" PASS HOLE 1-(21)	DF1				5.37 5.37				
				+017	344	1	SPEC w/ 20" TURNOUT	DF8				40.00 40.00				
					343							40.00 40.00				
					339	5	339 343 341 342 343 STD SECT	9				200.00 200.00				
					338	1	SPEC w/ 2" PASS HOLE 1-(21)	DF1				40.00 40.00				
					337		335 336 337					120.00 120.00				
					335	3	STD SECT	9								

CONTINUED ON 214

LINE CONTINUED ON SHT. 214

PLAN STATION—READ UP	PULL, BEVEL OR TURN	INV. ELEVATION	SLOPE TANGENT COSINE
FC 19+94.43		34.50	
EON 19+89.12 AND 19+91.58 BK	94°39' LT	34.50	
19+62.59		34.49	
18+82.59		34.48	
18+47.96	24°12' LT	34.48	
2" P.H. 18+42.59 18+40.59		34.48	
20" T.O. 18+02.59 18+00		34.47	
17+62.59		34.47	
2" P.H. 15+62.59 15+60.59		34.44	
15+22.59		34.44	
14+02.59		34.42	0°01' .000124 1.000000

CONTINUED FROM 212

Ameron UTILITY PRODUCTS GROUP

RUSSIAN RIVER - CONTRACT #1

LAYOUT DRAWING STATION 14+02.59 TO STATION 19+94.43

SYMBOL	REVISION	DATE	BY	APPV'D.

DRAWN	LW	12-1-75	
CHECKED			
APPV'D.			

2265 213.0

60-4-102.128.9

1000-1003 (7/75)

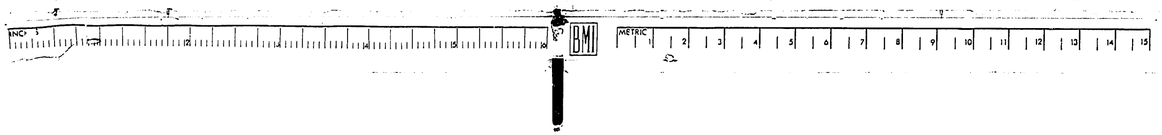

OFFICE

CONTINUED ON 2L5

CONTRACT DRAWING REFERENCE	PIPE SIZE, TYPE AND CLASS	(JOINT DETAIL) REFERENCE	BID ITEM	UNIT LENGTH	PIECE NO.	NO. REQ'D	DESCRIPTION	DETAIL DWG. REF.	SLOPE HORIZ.	SLOPE DIST.	PLAN LOOKING IN DIRECTION OF LAYING	INV. STATION—READ UP	PULL, BEVEL OR TURN	INV. ELEVATION	SLOPE TANGENT COSINE	PROFILE NOTE: VIEW FROM RIGHT SIDE OF PIPE
			BILLING													
					359					120.00		23+30.86		11.00		
							357 358 359			120.00						
					357	3	STD SECT		2			22+10.26		11.00	0°00' 1.00000	
							SPEC 1-OUT ELBOW			22.86						
					356	1	23°10'	2F13		25.56		21+88.00	23°10' UP	11.00		
										17.96						
					355	1	STD SECT		2	16.51		21+71.49		18.00		
										40.00						
				+ 020 + 029	354		SPEC 1-OUT ELBOW 23°09'	2F30		36.78		21+34.71		38.80	-23°01' .427770 .918412	
										1.18						
				23.63'			w/ ¼" TYPE "B" AIR VALVE			1.05		21+33.63	23°09' DN	34.26	-0°01' .000124 1.00	
				009 14.37	354	1	1-(215) 24-(211) 24-(218) 24-(218)	2FTV		38.17		21+00				
										38.17		20+95.19	0°02' DN	34.26		
				+½ 021 +½ 025	353	1	SPEC w/ FLG'D END & 2" O.L., B.S. END 1-(224)	2F11		(7.00) 4.83 4.83		20+91.65 20+90.63		34.26		
							¼B BUTTERFLY VALVE (BY OTHERS)			1.25 1.25						
				+½ 025 +½ 021	352A 350	1	SPEC 4"FLG'D, M.H. & 2"AG 1-(215) 24-(211) 24-(218)	2F32 2F10		9 JS 9 JS		20+89.38 20+80.38 20+85 20+79.93		34.26		
					351	1	STD SECT.	3		41.00 41.00						
					350A		SPEC w/ REDUCER	2F29		32.75 32.75		20+38.93		34.26		
				+0040	350	1	& 12" NYE	2F34		11.75 11.75		20+06.18		34.25		
												19+94.43		34.50	0°01' .000124 1.00000	
							1-(216) 36-(212) 36-(214)					CONTINUED FROM 2L3				

60-4-102.115 — 48"SCH STD 36'7¢ — 48 SCH STD 14'7¢ (100) — 60-4-102.103

FIELD CLOSURE — ¼" TYPE B AIR — 2" O.L. — 5" O.L. M.H. — BLIND FLG

APPROVED
By [signature] Date 2-4-76
SONOMA COUNTY WATER AGENCY

RECEIVED
FEB 3 1976
SONOMA COUNTY WATER AGENCY

Ameron UTILITY PRODUCTS GROUP

RUSSIAN RIVER - CONTRACT #1

LAYOUT DRAWING
STATION 19+94.43 TO STATION 23+30.86

SYMBOL	REVISION	DATE	BY	APPV'D.
1	ADDED M.H.	2-2-76	LW	

DRAWN	LW	12-1-75	
CHECKED			
APPV'D.			

~~2365~~ 23/4 2L4.1

60-4-102.128.10

1000-1003 (7/75)

CONTINUED ON 266

BID ITEM	UNIT LENGTH	PIECE NO.	NO. REQ'D	DESCRIPTION	DETAIL DWG. REF.	SLOPE HORIZ.	SLOPE DIST.	PLAN LOOKING IN DIRECTION OF LAYING	INV. STATION–READ UP	PULL, BEVEL OR TURN	INV. ELEVATION	SLOPE TANGENT COSINE	PROFILE NOTE: VIEW FROM RIGHT SIDE OF PIPE
		378	1	SPEC BEVEL 2°51' N	2F1	40.98 40.55			30+61.53	2°51'DN	53.20		
		377	1	STD SECT	3	41.00 40.77			30+20.98		48.86		
		376	1	STD SECT	3	41.08 40.85			29+80.21		44.49		
		375	1	SPEC BEVEL w/ 2" PASSHOLE 5°00' N 1-(217)	2F1 2F17	41.06 41.06		2" P.H.	29+39.37 29+37.37	6°08'UP	40.11	6027 .107108 .994307 -0°01' .000291 1.000000	
		374		372 373 374 369 370 371		246.00 245.96			28+98.31	0°58'UP	40.13		
	6	369	6	STD SECT 1-(215) 24'-(211) 24'-(213)	3								
+024 +029		368A 368	1	SPEC w/ 2" TYPE "B" AIR VALVE	2F31 2F16	41.00 40.99		2" TYPE "B" A.V.	26+52.34 26+20		44.39	-0°59' .017327 .999850	
		367		366 367 363 364 365		(205.00) 203.00 203.00			26+11.35	1°00'DN	45.10		
	5	363	5	STD SECT	3			FIELD CUT LEG'D C.I.S. FOR CLOSURE	24+08.35		45.00		
				SPEC 2-CUT ELBOW		5.35 5.35		2" P.H.	24+06.00 24+03.00	31°42'DN	45.00	0°01' .000401 1.00000	
00.7		362	1	w/ B.S. END & 2" PASSHOLE 31°42' 1-(217) 1-(204)	2F15	18.59 15.81			23+87.19		35.22		
		361	1	STD SECT	2	40.00 34.07			23+53.16		14.19		
				SPEC 2-CUT ELBOW		6.07 5.16						31°43' .615187 .850593	
		360	1	31°43'	2F14	17.14 17.14			23+48.00	31°43'UP	11.00		
								CONTINUED FROM 264	23+30.86		11.00		

60-4-102.128.11

48" SCH 120 — 48" ø — (470) L

48 SCH 120 — 48" ø

CONTRACT DRAWING REFERENCE

PIPE SIZE TYPE AND CLASS

(JOINT DETAIL) REFERENCE

Ameron UTILITY PRODUCTS GROUP

RUSSIAN RIVER - CONTRACT #1

LAYOUT DRAWING
STATION 23+30.86 TO STATION 30+61.58

SYMBOL	REVISION	DATE	BY	APPV'D.

DRAWN	KW	12-2-75	
CHECKED			
APPV'D.			

2265 215.0

1000-1093 (7/75)

CONTINUED ON 217

BID ITEM	UNIT LENGTH	PIECE NO.	NO. REQ'D	DESCRIPTION	DETAIL DWG. REF.	SLOPE HORIZ.	SLOPE DIST.	PLAN LOOKING IN DIRECTION OF LAYING	INV. STATION—READ UP	PULL, BEVEL OR TURN	INV. ELEVATION	SLOPE TANGENT COSINE	PROFILE NOTE: VIEW FROM RIGHT SIDE OF PIPE
									35+28.12		13.00✓	0°00' 1.000000	
008				SPEC 2-CUT ELBOW			28.12		35+00.00	30°18' UP	13.00	1.000000	
							28.12						
		392	1	30°18' J	2F22		13.08		34+88.75		19.58		
							11.25						
		391	1	SPEC SHORT	2F21		18.08		34+73.14		28.90		
							15.61						
		390	1	STD SECT	2		40.00		34+38.161		48.89	-30°18' .5847615 .1632977	
							34.53						
		389A		SPEC 2-CUT ELBOW 29°38' J	2F31		4.18						
							3.61						
009	+024	389	1	w/ 2" TYPE "B" AIR VALVE 1-(213) 24-(211) 24-(213)	2F20		35.00	2" TYPE "B" A.V.	34+35.00	29°38' DN	51.00✓		
							35.00		34+30				
		388	1	SPEC SHORT w/ P.S. END 1-(224)	2F19		(24.31) 27.32		34+00.00		51.41		
							27.32						
		386		384 385 386			123.00		33+72.66		51.73		
							122.99						
		384	3	STD SECT	3								
		383	1	SPEC w/ 2" PASSHOLE 1-(217)	2F18		41.00	2" P.W.	32+49.69		53.16		
							41.00		32+47.69				
		382	2	STD SECT	3		82.00		32+08.69		53.64	-0°40' .0116145 .9999932	
		381					81.99						
	+024	380A	1	SPEC w/ 2" TYPE "B" AIR VALVE 1-(215) 24-(211) 24-(213)	2F31		41.00	2" TYPE "B" A.V.	31+26.70	0°29' DN	54.59	0°00' 1.000000 1.000000	
		380			2F19		41.00		31+22				
		379	1	SPEC SHORT BEVEL 3°16'	2F1		24.21		30+85.70	3°16' DN	54.59	3°16' .0571734 .9983770	
							24.17						
									30+61.75	2°51' DN	53.23	6°32' .1121103 .9936307	

CONTINUED FROM 215

FIELD CHANGE Loop @ B.S.

60-4-102.116

60-4-102.104

1/4" SC 300' (1800) 3/8"/ft

1/4"/ft

1/4" SC 480' (1400) 3/100'

(1400)

CONTRACT DRAWING REFERENCE

PIPE SIZE, TYPE AND CLASS (JOINT DETAIL) REFERENCE

Ameron UTILITY PRODUCTS GROUP

RUSSIAN RIVER - CONTRACT #1

LAYOUT DRAWING
STATION 30+61.75 TO STATION 35+28.12

SYMBOL	REVISION	DATE	BY	APPV'D.

DRAWN	LW	12-3-75	
CHECKED			
APPV'D.			

2265 216.0

60-4-102.128.12

1000-1003 (7/75)

BM1

CONTINUED ON

BID ITEM	UNIT LENGTH	PIECE NO.	NO. REQ'D	DESCRIPTION	DETAIL DWG. REF.	SLOPE HORIZ.	DIST.	PLAN LOOKING IN DIRECTION OF LAYING	INV. STATION–READ UP	PULL, BEVEL OR TURN	INV. ELEVATION	SLOPE TANGENT COSINE	PROFILE NOTE: VIEW FROM RIGHT SIDE OF PIPE
009		412	1	SPEC w/ EXTRA CYL FOR FIELD CLOSURE 1-(224)	2F19	(25.00) 23.00 23.00			42+93.71		47.30		
		411	1	SPEC w/ 2" PASSHOLE 1-(217)	2F18	41.00 41.00		2" PH	42+70.71 42+68.71		47.26		
		410		408 409 410 404 405 406 407		287.00 287.00			42+29.71		47.18		
		404	7	STD SECT.	3								
		403	1	SPEC w/ 2" PASSHOLE 1-(217)	2F18	41.00 41.00		2" PH.	39+42.71 39+40.71		46.64		
		402		400 401 402 396 397 398 399		287.00 287.00			39+01.71		46.56		
		396	7	STD SECT	3								
		395A		SPEC 2-CUT ELBOW w/ 18" MANHOLE 28°18'	2F32	7.71 7.71		18" M.H.	36+14.71 36+10.0		46.02	0°00' .001890 .999998	
008	+029	395		1-(215) 24-(213) 24-(21)	2F24	31.34 27.56			36+07.00	28°18' DN	46.00		
				SPEC 2-CUT ELBOW		38.02 38.44			35+79.44		31.09	28°25' .540984 .879543	
		394	1	28°25'	2F23	3.05 3.05			35+46.00	28°25' UP	13.00		
		393	1	SPEC SHORT	2F21	14.83 14.83			35+42.95		13.00		
									35+28.12		13.00	0°00' .00000 1.00000	

CONTINUED FROM 226

CONTRACT DRAWING REFERENCE: 60-4-102.104

PIPE SIZE, TYPE AND CLASS (JOINT DETAIL REFERENCE): 48 SC 480 14" R (400); 48 SC 500 3/8" R (500)

BILLING

FIELD CLOSURE REQ'D @ B.S.

Ameron UTILITY PRODUCTS GROUP

RUSSIAN RIVER - CONTRACT #1

LAYOUT DRAWING

STATION 35+28.12 TO STATION 42+93.71

SYMBOL	REVISION	DATE	BY	APPV'D.

DRAWN	LW	12-11-75
CHECKED		
APPV'D.		

2265 247.0

1000-1003 (7/75)

60-4-102.128.13

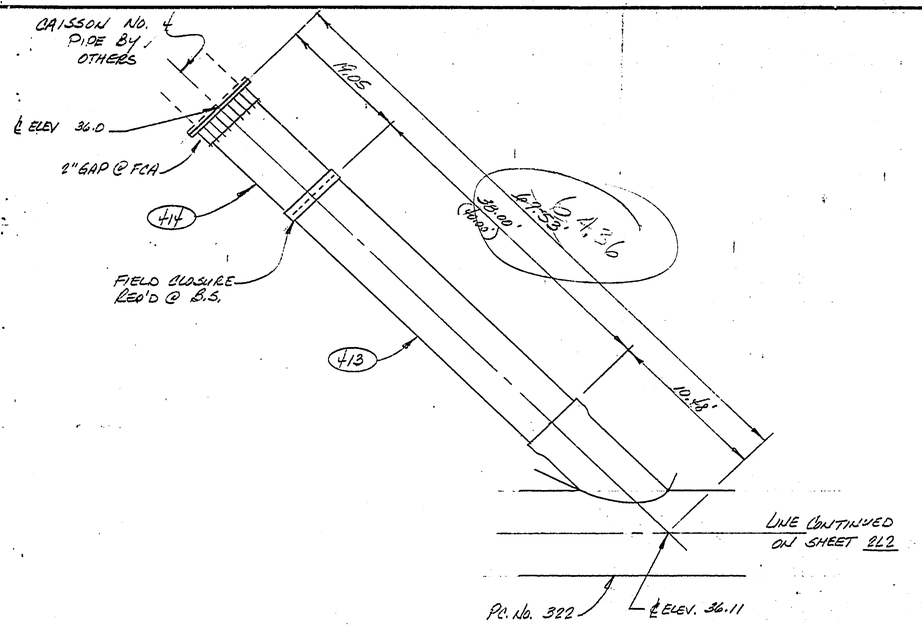

30" SC 500 (SGA) ✓

PLAN VIEW

CONTR. DWG. REF. SHT. 60-4-102.103
60-4-102.114

Pc. No.	DETAIL SHEET
413	9
414	2F25

SHIP LOOSE ITEMS

1 - (19) 30" FCA.
1 - (123) 30" B.S.

Ameron PIPE PRODUCTS GROUP

RUSSIAN RIVER - CONTRACT #1

SYMBOL	REVISION	DATE	BY	APP'V'D.

DRAWN	LW	2-12-75	
CHECKED			
APP'V'D.		2065	2L8.0

60-4-102.128.14

1000-1004 (8/70)

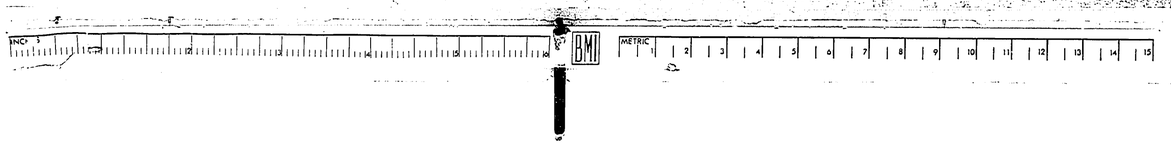

OFFICE

15434

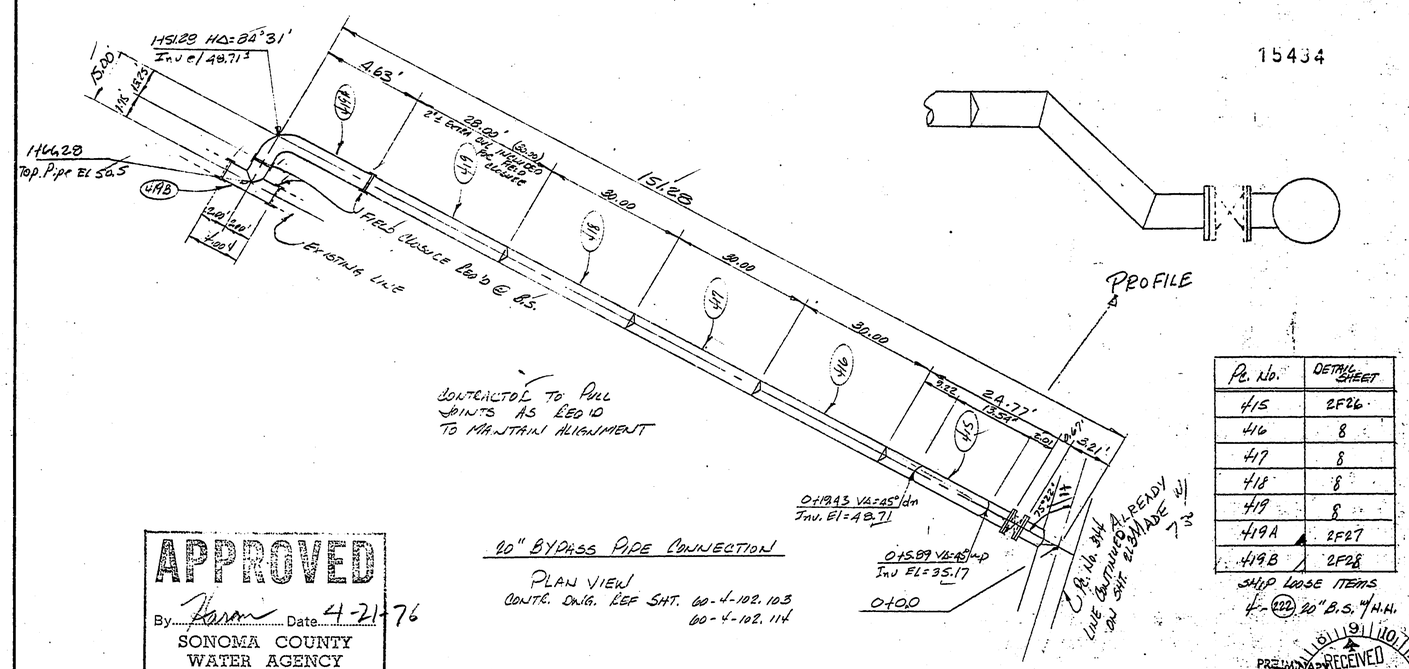

Pc. No.	DETAIL SHEET
415	2F26
416	8
417	8
418	8
419	8
419A	2F27
419B	2F28

SHIP LOOSE ITEMS
4-(222) 20" B.S. w/H.H.

APPROVED
By Haran Date 4-21-76
SONOMA COUNTY
WATER AGENCY

20" BYPASS PIPE CONNECTION

PLAN VIEW
CONTR. DWG. REF SHT. 60-4-102.103
60-4-102.114

PRELIMINARY
APR 1 1976
RECEIVED
APR 26 1976
SONOMA COUNTY WATER AGENCY

Ameron PIPE PRODUCTS GROUP

RUSSIAN RIVER - CONTRACT #1

SYMBOL	REVISION	DATE	BY	APPV'D.
△1	Resived to agree w/field Survey	4/19/76	RB	

DRAWN	KW	12-15-75
CHECKED		
APPV'D.		

~~2205~~ 2314 219.1

60-4-102.128.15

1000-1004 (8/70)

CONTINUED ON 4L3

CONTRACT DRAWING REFERENCE	PIPE SIZE TYPE AND CLASS (JOINT DETAIL REFERENCE)	BID ITEM (BILLING)	UNIT LENGTH (BILLING)	PIECE NO.	NO. REQ'D	DESCRIPTION	DETAIL DWG. REF.	SLOPE / HORIZ.	DIST.	PLAN LOOKING IN DIRECTION OF LAYING	INV. STATION–READ UP	PULL, BEVEL OR TURN	INV. ELEVATION	SLOPE TANGENT COSINE	PROFILE NOTE: VIEW FROM RIGHT SIDE OF PIPE
60-4-102.105	48SC 320 8GA	009		568	1	STD SECT WSP	3	41.00 / 40.48			50+38.55		189.91	9°10' .161527 .987204	
	48SC 360 3/16			567	1	SPEC BEVEL 5°00'	4F1	40.64 / 39.36			49+93.07	5°13' DN	183.37		
	48SC 360 3/16			566 / 565	2	STD SECT WSP	3	82.00 / 79.43			49+58.71		173.27	14°23' .256676 .965602	
	48SC 360 3/16			564	1	SPEC BEVEL 2°46'	4F1	41.00 / 40.16			48+79.29	2°46' UP	152.88		
	48SC 360 3/16			563 / 562	2	STD SECT WSP	3	82.00 / 80.32			48+39.13		144.62	11°37' .205820 .979469	
	48SC 360 3/16		+015	561	1	SPEC BEVEL 1°45' w/12" TURNOUT & 1/2" OL	4F15 / 4F1	41.00 / 40.39		12" TURNOUT 1/2" OL	47+58.81 / 47+57	1°45' UP	128.09		
	48SC 440 4GA			560	1	STD SECT WSP	3	41.00 / 40.39			47+18.42		121.06	9°52' .173947 .985206	
	48SC 440 4GA			559	1	SPEC BEVEL 2°52'	4F1	40.79 / 39.79			46+78.03	2°52' DN	114.03		
	48SC 440 4GA					SPEC 1-CUT ELBOW		10.00 / 9.75			46+38.24		105.04		
	48SC 440 4GA			558	1	12°41'	4F1	31.00 / 30.24			46+28.48	13°01' LT / 12°41' CB	102.84		
	48SC 480 1/4					SPEC 1-CUT ELBOW		6.72 / 6.55			45+98.24		96.01	12°44' .225946 .975412	
	48SC 480 1/4			557	1	w/ COAL TAR EPOXY LINING 16°49'	4F14	2.00 / 1.74			45+91.69	16°49' DN	94.53		
	48SC 440 4GA			556	1	SPEC w/ COAL TAR EPOXY LINING	4F13	41.00 / 35.67			45+89.95		93.54	29°33' .567024 .869889	
											45+54.29	4°13' UP	73.32	25°20' .473410 .903834	

CONTINUED FROM 4L1

Ameron UTILITY PRODUCTS GROUP

RUSSIAN RIVER - CONTRACT #1

LAYOUT DRAWING
STATION 45+54.29 TO STATION 50+38.55

SYMBOL	REVISION	DATE	BY	APPV'D.

DRAWN	LW	12-17-75
CHECKED		
APPV'D.		

2314 4L2.0

1000-1003 (7/75)

60-4-102.128.16

CONTINUED ON 4L4

CONTRACT DRAWING REFERENCE	PIPE SIZE, TYPE AND CLASS (JOINT DETAIL REFERENCE)	BID ITEM	UNIT LENGTH	PIECE NO.	NO. REQ'D	DESCRIPTION	DETAIL DWG. REF.	SLOPE / HORIZ.	DIST.	PLAN LOOKING IN DIRECTION OF LAYING	INV. STATION–READ UP	PULL, BEVEL OR TURN	INV. ELEVATION	SLOPE TANGENT COSINE	PROFILE NOTE: VIEW FROM RIGHT SIDE OF PIPE
60-4-102.105	48 SC 320 BGA (300)	009		583	1	SPEC BEVEL 5°00'	4F1	41.00 / 41.00			56+51.62	5°48' UP	215.90	6°29' .113681 .993600	
				582 / 581	2	STD SECT WSP	8	82.00 / 81.99			56+10.62		215.41		
			+029	580A / 580	1	SPEC w/ 18" MANHOLE 1-(49) 16-(428) 16-(427)	4F19 / 4F18	41.00 / 41.00		18" M.H.	55+28.63 / 55+00		214.44	0°40' .011855 .999930	
				579	1	SPEC BEVEL 2°08'	4F1	40.83 / 40.78			54+87.63	2°08' DN	213.96	2°49' .049210 .998791	
				578	1	SPEC BEVEL 3°54'	4F1	40.72 / 40.44			54+46.85	3°54' DN	211.95		
	54+00			577 / 576 / 575	3	STD SECT WSP	8	123.00 / 122.15			54+06.41		207.18	6°43' .117868 .993125	
				574	1	SPEC BEVEL 1-(459) w/2" PASSHOLE 5°00'	4F17 / 4F1	41.06 / 41.05		2" PH.	52+84.25 / 52+82.25	5°18' UP	192.78	1°25' .024731 .999694	
				573	1	STD SECT WSP	8	41.00 / 41.00			52+43.20	1°00' UP	191.77		
						SPEC 1-CUT ELBOW		6.66 / 6.66			52+02.21		191.47		
				572	1	16°26'	4F7	34.34 / 34.34			51+95.55	16°26' RT.	191.42		
				571 / 570	2	STD SECT WSP	8	82.00 / 82.00			51+61.21		191.18		
						SPEC 1-CUT ELBOW		38.21 / 38.21		2" PH	50+79.21 / 50+77.21		190.58	0°25' .007241 .999974	
				569	1	w/2" PASSHOLE 1-(458) 8°45'	4F16	2.48 / 2.45			50+41.00	8°45' DN	190.31		
											50+38.55		189.91	9°10' .161527 .987204	

CONTINUED FROM 4L2

Ameron UTILITY PRODUCTS GROUP

RUSSIAN RIVER - CONTRACT #1

LAYOUT DRAWING
STATION 50+38.55 TO STATION 56+51.62

SYMBOL	REVISION	DATE	BY	APPV'D.

DRAWN	KW	12-22-75
CHECKED		
APPV'D.		

2314 4L3.0

60-4-102.128.17

1000-1003 (7/75)

CONTINUED ON 4L5

CONTRACT DRAWING REFERENCE	PIPE SIZE TYPE AND CLASS (JOINT DETAIL REFERENCE)	BID ITEM	UNIT LENGTH	PIECE NO.	NO. REQ'D	DESCRIPTION	DETAIL DWG. REF.	SLOPE HORIZ.	DIST.	PLAN LOOKING IN DIRECTION OF LAYING	INV. STATION–READ UP	PULL, BEVEL OR TURN	INV. ELEVATION	SLOPE TANGENT COSINE	PROFILE NOTE: VIEW FROM RIGHT SIDE OF PIPE
	62+00	009		597	1	SPEC BEVEL 4°45'	4F1	40.67 / 40.52			62+22.93	4°45' DN	261.25	0°06' .001847 .999998	
				596 / 595	2	STD SECT WSP	4	82.00 / 81.71			61+82.40		257.81		
				594	1	SPEC BEVEL 3°41' W/2" PASSHOLE 1-(459)	4F17 / 4F1	41.00 / 40.99		2" PH.	61+00.70 / 60+98.70	3°41' UP	250.86	4°51' .084955 .996411	
				593	1	STD SECT WSP	4	41.00 / 40.99			60+59.70		250.03		
	48.5C 260 106A (260)					SPEC 2-CUT ELBOW		9.05 / 9.05			60+18.71		249.19		
				592	1	27°22'	4F7	31.96 / 31.92			60+09.66	27°21' LT 1°31' DN 27°22' CB	249.01	1°10' .020366 .999793	
				591 / 590	2	STD SECT WSP	4	82.00 / 81.91			59+77.74		247.51		
	59+00			589	1	SPEC BEVEL 3°47'	4F1	40.72 / 40.46			58+95.83	3°47' DN	243.66	2°41' .047000 .998897	
				588	1	STD SECT WSP	3	41.00 / 40.74			58+55.37		239.06		
				587	1	SPEC 4/2" PASSHOLE 1-(459)	4F17	41.00 / 40.74		2" PH.	58+14.63 / 58+12.63		234.43		
	49 SC 320 86A (240)					SPEC 1-CUT ELBOW		30.82 / 30.62			57+73.89		229.80		
				586	1	9°35'	4F7	10.18 / 10.12			57+43.27	9°39' LT 9°35' CB	226.32		
	57+00			585	1	STD SECT WSP	3	41.00 / 40.74			57+33.15		225.17		
	(300)			584	1	STD SECT WSP	3	41.06 / 40.80			56+92.42		220.54	6°29' .113681 .993600	
											56+51.62	5°48' UP	215.90	0°40' .011855 .999930	

CONTINUED FROM 4L3

60-4-102.105

BILLING														

Ameron UTILITY PRODUCTS GROUP

RUSSIAN RIVER - CONTRACT #1

LAYOUT DRAWING
STATION 56+51.62 TO STATION 62+22.93

SYMBOL	REVISION	DATE	BY	APPV'D.

DRAWN	KW	12-22-75
CHECKED		
APPV'D.		

2314 4L4.0

60-4-102.128.18

1000-1003 (7/75)

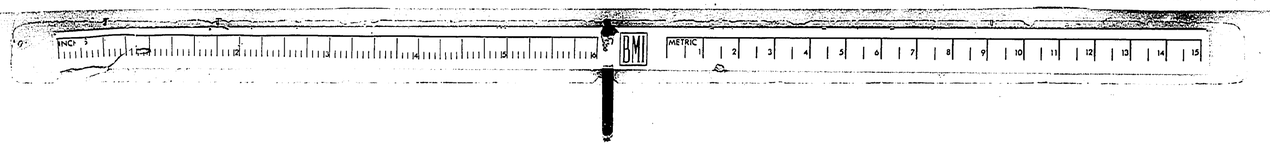

CONTINUED ON 466

CONTRACT DRAWING REFERENCE	PIPE SIZE TYPE AND CLASS (JOINT DETAIL REFERENCE)	BID ITEM	UNIT LENGTH	PIECE NO.	NO. REQ'D	DESCRIPTION	DETAIL DWG. REF.	SLOPE HORIZ.	DIST.	PLAN LOOKING IN DIRECTION OF LAYING	INV. STATION—READ UP	PULL, BEVEL OR TURN	INV. ELEVATION	SLOPE TANGENT COSINE	PROFILE NOTE: VIEW FROM RIGHT SIDE OF PIPE
60-4-102.105	48 SC 260 10GA (246)	609		611		608 609 610 611		164.00 163.90			68+78.08		268.24		
				608	4	STD SECT	5				67+14.18	Σ	262.54		
				607	1	SPEC BEVEL 4°49'	4F8	40.83 40.81			66+73.38	4°49' LT	261.12		
				606	1	SPEC BEVEL 1°25'	4F8	40.95 40.93			66+32.45	1°25' LT	259.69		
				605A	1	STD SECT	5	41.00 40.98			65+91.48		258.27	1°59' .034789 .999395	
				605	1	SPEC BEVEL 1°57'	4F3	41.00 40.98			65+50.50	1°57' UP	256.84	0°02' .000768 1.00000	
				604A	1	SPEC W/ CCP BELL & WSP SPIGOT	4F22	40.69 40.69			65+09.81	3°03' UP	256.81		
				604	1	SPEC BEVEL 3°03'	4F1	41.00 40.94			64+68.87		258.97	-3°01' .052676 .998615	
				603	1	STD SECT WSP	4	41.00 40.94			64+27.92	2°56' DN	261.12		
				602	1	SPEC BEVEL 2°56'	4F1	41.00 41.00			63+86.93		261.17		
				601 600	2	STD SECT WSP	4	82.00 82.00			63+04.93		261.27	-0°04' .001225 .999999	
			+029 +028	599A 599	1	SPEC W/ 10" AIR VALVE & MH 1-(49) 16-(43) 16-(47)	4F21 4F18	41.00 41.00		10" AV. & MH.	62+80 62+63.93	0°10' DN	261.32	0°06' .001847 .999998	
				598	1	STD SECT WSP	4	41.00 41.00			62+22.93	4°45' DN	261.25	4°51' .084955 .996411	

CONTINUED FROM 464

BILLING

Ameron UTILITY PRODUCTS GROUP

RUSSIAN RIVER - CONTRACT #1

LAYOUT DRAWING
STATION 62+22.93 TO STATION 68+78.08

SYMBOL	REVISION	DATE	BY	APPV'D.

DRAWN	KW	12-22-75
CHECKED		
APPV'D.		

2314 465.0

1000-1003 (7/75)

60-4-102.128.19

CONTINUED ON 4L7

CONTRACT DRAWING REFERENCE	PIPE SIZE, TYPE AND CLASS	(JOINT DETAIL) REFERENCE	BID ITEM	UNIT LENGTH	PIECE NO.	NO. REQ'D	DESCRIPTION	DETAIL DWG. REF.	SLOPE HORIZ.	SLOPE DIST.	PLAN LOOKING IN DIRECTION OF LAYING	INV. STATION—READ UP	PULL, BEVEL OR TURN	INV. ELEVATION	SLOPE TANGENT COSINE	PROFILE NOTE: VIEW FROM RIGHT SIDE OF PIPE
			BILLING													
							SPEC 3-CUT ELBOW									
					682	1	w/ 2" PASSHOLE 1-(42)	4F2S					58°23'			
					681	2	STD SECT W/SP 1-(42) BS.	4								
					630		w/EXTRA CYL FOR FIELD CLOSURE									
							SPEC 1-CUT ELBOW									
					609	1	11°19'	4F1					11°10'			
					628	1	SPEC W/ CCP BEVELED SOCKET & W/SP BEVELED END	4F14 4F1								
					627	1	STD SECT	5								
					626	1	SPEC BEVEL 4°09'	4F28					4°09'			
					625		622 623 624 625 626 616 617 618 619 620 621									
					616	10	STD SECT	5								
					615	2	STD SECT	5								
					614											
			+025		613A	1	SPEC 4/ 10" AIR VALVE & MH 1-(19) 16-(43) 16-(47)	4F41 4F28								
			+029		613	1										
					612	1	STD SECT	5								

												77+37.07		252.75		
											12" PH.	77+07.07				
												77+00.67	58°23' RT O.K.	252.81		
												76+95.41		252.81		
												76+15.64		252.93		
												75+87.09	11°10' O.K. LT	252.97	-0°05' .00 NSH .999619	
												75+74.64	200' UP	252.99	-2°05' .036424 .999337	
												75+33.44	384' UP	254.49		
												74+92.61		258.18	-5°09' .090200 .995957	
												74+52.07	4°09' DN	261.83		
															-0°59' .012380 .999849	
												70+42.14	0°56' DN	268.96	-0°03' .001115 .999999	
												69+60.14	0°07' DN	269.05	0°34' .001164 .999999	
											10" A.V. & MH.	69+50.00				
												69+19.14	1°00' DN	269.00	1°04' .018600 .999827	
												68+78.08	0°55' DN	268.24	1°57' .034089 .999351	

CONTINUED FROM 4L5

FIELD CLOSURE (FCD 1.0 SH. 2)

60-4-102.105 (700) 48 SC 160 10.54 (700) 60-4-102.106

75+00

009

Ameron UTILITY PRODUCTS GROUP

RUSSIAN RIVER - CONTRACT #1

LAYOUT DRAWING
STATION 68+78.08 TO STATION 77+37.07

SYMBOL	REVISION	DATE	BY	APPV'D.

DRAWN KW 12-22-75
CHECKED

2314 4L6.0

60-4-102.128.20

1000-1003 (7/75)

CONTINUED ON 428

CONTRACT DRAWING REFERENCE	PIPE SIZE TYPE AND CLASS (JOINT DETAIL REFERENCE)	BID ITEM	UNIT LENGTH	PIECE NO.	NO. REQ'D	DESCRIPTION	DETAIL DWG. REF.	SLOPE / HORIZ.	DIST.	PLAN LOOKING IN DIRECTION OF LAYING	INV. STATION—READ UP	PULL, BEVEL OR TURN	INV. ELEVATION	SLOPE TANGENT COSINE	PROFILE NOTE: VIEW FROM RIGHT SIDE OF PIPE
60-4-102.106	48SC 320 BGA (280)	009		644	1	SPEC w/ WSP SPIGOT & CCP BELL	4F22	40.69 / 40.64			81+90.03		222.94	-2°49' .049165 .998794	
				643	1	SPEC BEVEL 2°44'	4F1	40.80 / 40.80			81+49.39	2°44' DN	224.94	-0°05' .001454 .999999	
				642	1	SPEC BEVEL 2°27'	4F1	41.00 / 40.96		OK	81+08.59	2°27' UP	225.00		
						SPEC 2-CUT ELBOW		4.31 / 4.31			80+67.63		226.81	-2°32' .044209 .999024	
				641		w/ 2" P.H. 1-(45) 44°22'	4F28	20.90 / 20.84		EQN 2" PH. OK	80+63.32 AHD / 80+83.85 BK / 80+78.01	OK 44°22' LT 1°45' UP 44°19' CB	227.00		
	80+50			640 / 639	2	STD SECT WSP	4	82.00 / 81.77			80+63.01		228.56		
				638	1	SPEC w/ BEVEL CCP SPIGOT & WSP BELL 4°12'	4F27	40.96 / 40.85			79+81.23		234.69	-4°17' .074962 .997202	
						SPEC 1-CUT ELBOW w/ CUT SPIGOT		39.39 / 39.39			79+40.39	4°12' DN	237.75	-0°05' .001454 .999999	
	48SC 260 106A 260		+014	637	1	w/ 8" TURNOUT TYPE "B" 10°36'	4F26	1.98 / 1.95		8" TURNOUT TYPE "B"	79+25 / 79+01.00	10°36' UP OK	237.81		
				636	1	SPEC BEVEL 5°30'	4F3	40.64 / 39.93		RIGHT	78+99.05		238.18	-10°41' .188740 .982651	
				635	1	SPEC w/ CCP BELL & WSP SPIGOT	4F22	40.69 / 40.53		WELD	78+59.12	5°32' DN	245.72	-5°09' .090159 .995960	
				634	1	STD SECT WSP	4	41.00 / 40.86			78+18.60	0°30' DN	249.37	-4°39' .081368 .996706	
				633	1	SPEC BEVEL 4°34'	4F1	40.66 / 40.66			77+77.73	4°34' DN	252.69		
											77+37.07		252.75	-0°05' .001454 .999999	

CONTINUED FROM 426

BILLING

Ameron UTILITY PRODUCTS GROUP

RUSSIAN RIVER - CONTRACT #1

LAYOUT DRAWING
STATION 77+37.07 TO STATION 81+90.03

SYMBOL	REVISION	DATE	BY	APPV'D.

DRAWN	KW	12-23-75
CHECKED		
APPV'D.		

2314 427.0

1000-1003 (7/75)

60-4-102.128.21

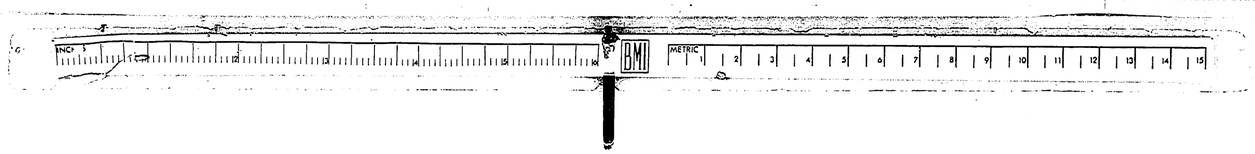

CONTINUED ON 4L9

CONTRACT DRAWING REFERENCE	PIPE SIZE TYPE AND CLASS (JOINT DETAIL REFERENCE)	BID ITEM	UNIT LENGTH	PIECE NO.	NO. REQ'D	DESCRIPTION	DETAIL DWG. REF.	SLOPE HORIZ.	DIST.	PLAN LOOKING IN DIRECTION OF LAYING	INV. STATION–READ UP	PULL, BEVEL OR TURN	INV ELEVATION	SLOPE TANGENT COSINE	PROFILE NOTE: VIEW FROM RIGHT SIDE OF PIPE
60-4-102.106	48 SC 320 BSH (300)	009				SPEC 1- CUT ELBOW		14.27 / 13.40			88+03.40		196.91	20°08' .366667 .938876	
				659	1	20°08'	4F7	27.44 / 27.44			87+90.00	20°08' UP	192.00		
						SPEC 1- CUT ELBOW		2.56 / 2.56			87+62.56		192.00	0°00' .000000 1.00000	
				658	1	w/2" P.H 1- (453) 10°42'	4F29	33.81 / 33.14		2" PH.	87+60.00 / 87+56.86	10°42' UP	192.00	-10°42' .139002 .912004	
				657	1	SPEC BEVEL 5°00'	4F1	40.64 / 40.46			87+21.86	5°20' DN	199.21		
				656	1	STD SECT WSP	3	41.00 / 40.82			86+81.40		203.01		
				655	1	SPEC w/ WSP BELL & CCD SPIGOT	4F34	41.27 / 41.09			86+40.58		206.85		
				654	1	SPEC BEVEL 4°58'	4F3	40.64 / 40.46			85+99.49		210.70	-5°22' .093974 .995614	
				653 / 652	2	STD SECT	S	82.00 / 82.00			85+59.03	4°58 DN	214.51		
				651	1	STD SECT	S	41.06 / 41.06			84+77.03		215.06	-0°23' .006792 .999977	
				650 / 649 / 648	3	STD SECT	S	123.00 / 122.96			84+35.97	1°01' UP	215.34		
				647	1	STD SECT	S	41.04 / 41.03			83+13.01		218.34	-1°24' .024404 .999702	
				646	1	STD SECT	S	41.03 / 41.00			82+71.98	0°49' UP	219.34	-2°12' .038673 .999253	
				645	1	STD SECT	S	41.00 / 40.95			82+30.98	0°36' UP	220.93		
											81+90.03		222.94	-2°49' .049165 .998794	

CONTINUED FROM 4L7

Ameron UTILITY PRODUCTS GROUP

RUSSIAN RIVER - CONTRACT # 1

LAYOUT DRAWING
STATION 81+90.03 TO STATION 88+03.40

SYMBOL	REVISION	DATE	BY	APPV'D.

DRAWN	KW	12-23-75
CHECKED		
APPV'D.		

2314 4L8.0

60-4-102.128.22

1000-1003 (7/75)

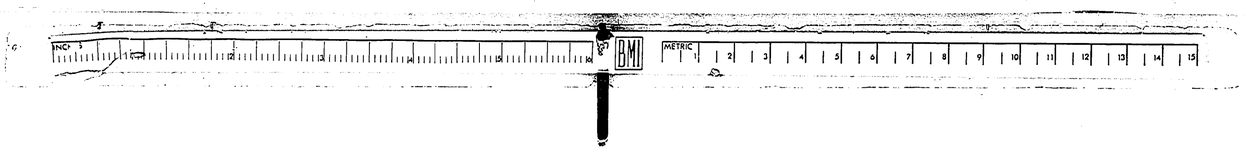

CONTINUED ON 4L10

CONTRACT DRAWING REFERENCE	PIPE SIZE TYPE AND CLASS (JOINT DETAIL REFERENCE)	BID ITEM	UNIT LENGTH	PIECE NO.	NO. REQ'D	DESCRIPTION	DETAIL DWG. REF.	SLOPE HORIZ.	DIST.	PLAN LOOKING IN DIRECTION OF LAYING	INV. STATION—READ UP	PULL, BEVEL OR TURN	INV. ELEVATION	SLOPE TANGENT COSINE	PROFILE NOTE: VIEW FROM RIGHT SIDE OF PIPE
60-4-102.106	48 SC 320 BGA. (320) 97+00	009		685		681 682 683 684 685 686 687 678 679 680		410.00 409.99			98+41.84		188.41		
				676	40	STD SECT	3								
				675	1	STD w/ CUT SPIGOT OL	4F5	41.00 41.00			94+31.85		191.29		
						SPEC 1-CUT ELBOW		1.83 1.83			93+90.85		191.58		
				674	1	w/ 2" PASSHOLE 1-(33) 8°39'	4F35	39.17 39.17		2" PH	93+89.02 93+87.02	O.K. 8°39' RT	191.60		
				673 672	2	STD SECT	3	82.00 82.00			93+49.85		191.87		
				671	1	SPEC BEVEL 1°27'	4F3	41.00 41.00			92+67.85		192.45	-0°24' .007039 .999975	
				670		667 668 669 670 663 664 665 666		328.00 327.83			92+26.85	1°27' UP	192.74		
				663	8	STD SECT	3								
				662A		SPEC w/ CCP BELL & WSP SPIGOT, 2" AV & M.	4F33	40.69 40.67			88+99.02		203.41		
			+029 +024	662	1	TYPE "B" 1-(419) 16-(423) 16-(427)	4F32			2" A.V. TYPE "B" & MH.	88+63.36 88+58.36	3°26' DN	204.73	-1°52' .032552 .999471	
						SPEC 1-CUT ELBOW		36.37 36.36			88+22.00	OR 18°33' DN	203.73	1°35' .027609 .999619	
				661	1	w/ BEVEL BELL 3°26' 18°33'	4F31 4F1	3.73 3.50			88+18.50		202.45		
				660	1	SPEC SHORT	4F30	16.03 15.10			88+03.40		196.91	20°08' .366667 .938876	

CONTINUED FROM 4L8

Ameron UTILITY PRODUCTS GROUP

RUSSIAN RIVER - CONTRACT #1

LAYOUT DRAWING
STATION 88+03.40 TO STATION 98+41.84

SYMBOL	REVISION	DATE	BY	APPV'D.

DRAWN	LW	12-29-75
CHECKED		
APPV'D.		

2314 4L9.0

60-4-102.128.23

1000-1003 (7/75)

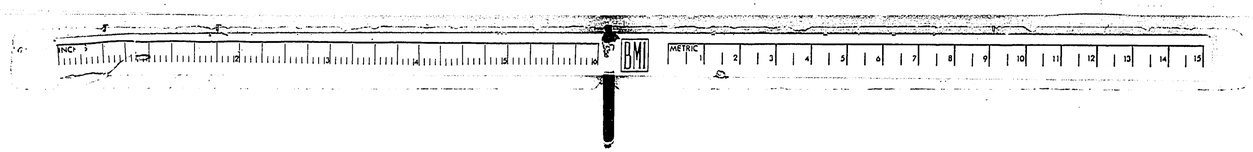

CONTINUED ON 4L11

CONTRACT DRAWING REFERENCE	PIPE SIZE, TYPE AND CLASS	JOINT DETAIL REFERENCE	BID ITEM	UNIT LENGTH	PIECE NO.	NO. REQ'D	DESCRIPTION	DETAIL DWG. REF.	SLOPE HORIZ.	SLOPE DIST.	PLAN LOOKING IN DIRECTION OF LAYING	INV. STATION—READ UP	PULL, BEVEL OR TURN	INV. ELEVATION	SLOPE TANGENT COSINE	PROFILE NOTE: VIEW FROM RIGHT SIDE OF PIPE
			BILLING													
					698A		1-(J9) 16-(J10) 16-(J17)	J553								
		010		+009 +024	698	1	SPEC BEVEL 1°22' w/ 2'AV TYPE 'B' ℄ M.H.	J478 J53	40.90 40.89			103+74.00 103+38.10		186.80	-0°56' .999846 .017486	
					697	1	STD SECT	5	41.00 41.00			103+38.10	1°22' DN	187.47		
					696	1	SPEC w/ CCD BELL & WSD SPIGOT	J524	40.69 40.69			102+92.10		187.17	0°25' .002343 .999973	
					695	1	SPEC BEVEL 2°47'	J52	40.80 40.74			102+51.42	2°47' DN	186.88		
					694 693	2	STD SECT WSD	3	82.00 81.87			102+10.68		184.59	3°12' .056121 .998429	
					692	1	SPEC BEVEL 3°12'	J47	41.00 41.00			101+28.81	3°12' UP	180.00	0°00' .000000 1.00000	
					691	1	SPEC BEVEL 1°24'	J51	41.06 41.05			100+87.81	1°24' UP	180.00	-1°24' .024578 .999698	
					690	1	STD SECT WSD	3	41.00 40.96			100+46.76	1°24' UP	181.01		
				+019	689A&B 689	1	SPEC 4" & 6" B.O. 1-(B3)12 2-(J16) + (J17)	J528 J528	41.00 40.96			100+25.80 99+98.30	6" B.O. TYPE A	182.78		
					688	1	SPEC w/ WSD BELL & CCD SPIGOT	J534	41.23 41.19			99+64.84		184.56		
					687	1	SPEC BEVEL 2°04'	J52	40.85 40.81			99+23.65		186.35	-2°29' .042306 .999061	
							SPEC w/ 8" TWINSIT		27.84 27.84			98+82.84	2°04' DN	188.12		
		009		+013	686	1		J536	13.16 13.16			98+55.00	8" TWINSIT TYPE A	188.31		
												98+41.84		188.41	-0°24' .007089 .999975	

CONTINUED FROM 4L9

SYMBOL	REVISION	DATE	BY	APPV'D.

LAYOUT DRAWING
STATION 98+41.84 : TO STATION 103+74.00

Ameron UTILITY PRODUCTS GROUP

RUSSIAN RIVER - CONTRACT #1

DRAWN	KW	12-30-75
CHECKED		
APPV'D.		

23/4

4L10.0

60-4-102.128.24

1000-1003 (7/75)

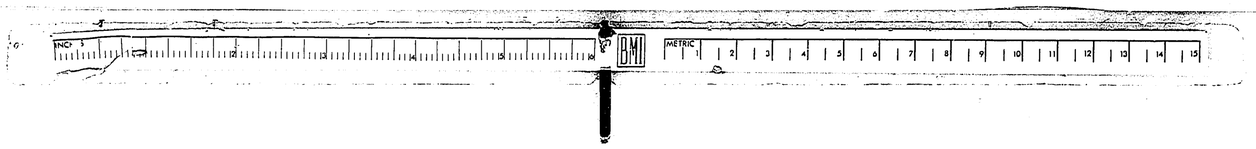

BID ITEM BILLING	UNIT LENGTH BILLING	PIECE NO.	NO. REQ'D	DESCRIPTION	DETAIL DWG REF.	SLOPE HORIZ.	SLOPE DIST.	PLAN LOOKING IN DIRECTION OF LAYING	INV. STATION—READ UP	PULL, BEVEL OR TURN	INV. ELEVATION	SLOPE TANGENT COSINE	PROFILE NOTE: VIEW FROM RIGHT SIDE OF PIPE
				CONTINUED ON 4112									
010				SPEC 1-CUT ELBOW			10.05 10.05		114+30.05		197.00	0°20' .000200 1.000200	
		724	1	w/ CUT SEGMT 11°15'	HH01		22.35 21.92		114+20.00	11°15' UP	197.00		
		723A		SPEC 1-CUT ELBOW	HF85		8.24 8.08		113+98.08		201.36	-11°15' .980424 .980780	
	-029 -024	723	1	w/ 2" AV TYPE 'B' & M.H. 1-(H4) 14-(H33) 16-(H21) 11°27'	HF89		32.36 32.36		113+90.00 118+55 115+70	O.K. 11°27' DN	202.97	0°12' .038673 .999993	
		722	1	STD SECT	S		41.00 41.00	2" AV TYPE 'B' 2 M.H.	113+57.64	0°28' DN	202.85		
		721 ↑ 719	3	719 720 721 STD SECT	S		123.00 122.99		113+16.64		202.35	0°42' .073183 .997926	
		718 ↑ 710	9	715 716 717 718 710 711 712 713 714 STD SECT	S		369.00 368.90		111+93.05	0°38' DN	200.85	1°20' .023392 .999727	
		709 ↑ 703	7	707 708 709 703 704 705 706 STD SECT	S		287.00 286.80		108+24.75	0°25' DN	192.22		
		702	1	SPEC BEVEL 4°03'	HF83		41.00 40.98		105+37.69		188.39	1°40' .038203 .999316	
		701 700	2	STD SECT	S		82.00 81.93		104+96.91	4°03' UP	182.12	-2°17' .040006 .999198	
		699	1	STD SECT	S		41.00 40.98		104+14.97	0°20' DN	185.41	-1°57' .034047 .999412	
								CONTINUED FROM 4110	103+74.00	1°00' DN	186.80	-0°56' .016486 .999864	

60-4-102.128.25 BOM (300) 48SDR35D

CONTRACT DRAWING REFERENCE

PIPE SIZE, TYPE, AND CLASS (JOINT DETAIL) REFERENCE

Ameron UTILITY PRODUCTS GROUP

RUSSIAN RIVER - CONTRACT #1

LAYOUT DRAWING
STATION 103+74.00 TO STATION 114+30.05

SYMBOL	REVISION	DATE	BY	APPV'D.

DRAWN	KW	12-31-75	
CHECKED			
APPV'D.			

2314 4111.0

1000-1003 (7/75)

CONTINUED ON UU3

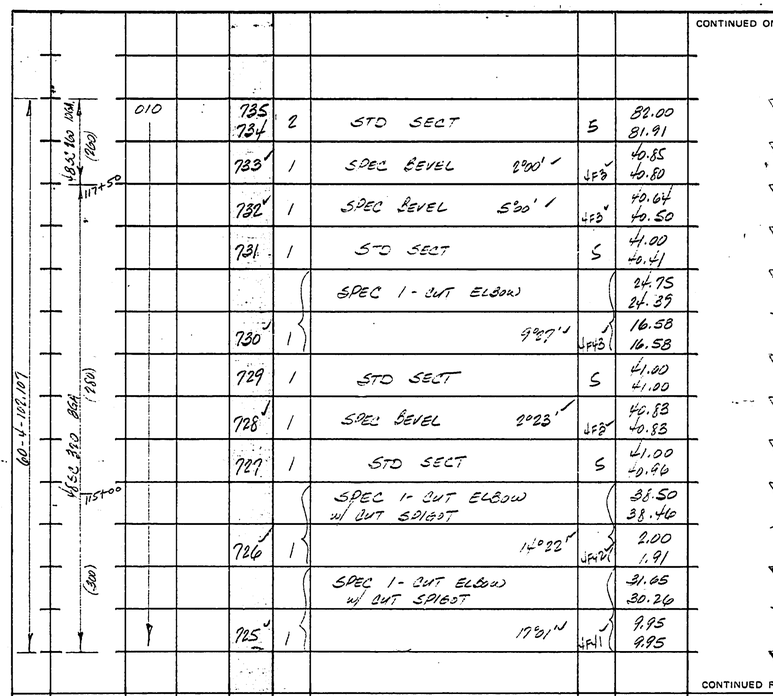

BID ITEM BILLING	UNIT LENGTH	PIECE NO.	NO. REQ'D	DESCRIPTION	DETAIL DWG. REF.	SLOPE HORIZ.	SLOPE DIST.	PLAN LOOKING IN DIRECTION OF LAYING	INV. STATION—READ UP	PULL, BEVEL OR TURN	INV. ELEVATION	SLOPE TANGENT COSINE	PROFILE NOTE: VIEW FROM RIGHT SIDE OF PIPE
010		735	2	STD SECT			S		118+78.02		231.31		
		734											
		733	1	SPEC BEVEL 2°00'		UF3			117+96.11		227.40		
		732	1	SPEC BEVEL 5°00'		UF3			117+55.31	2°00' DN	225.46	2°43' .047049 .998867	
		731	1	STD SECT			S		117+14.80	5°00' DN	222.11	4°43' .082089 .996599	
				SPEC 1-CUT ELBOW					116+74.39		215.18		
												9°43' .171417 .985024	
		730	1	9°27'		UF3			116+50.00	9°27' UP	211.00		
									116+33.42		210.92		
		729	1	STD SECT			S		115+92.42		210.78		
												0°46' .008088 .999967	
		728	1	SPEC BEVEL 2°23'		UF3			115+51.59	2°23' DN	210.54		
		727	1	STD SECT			S		115+10.63		208.64		
												2°39' .046390 .998926	
				SPEC 1-CUT ELBOW w/ CUT SPIGOT					114+72.17	O.R. 14°22' DN	206.85		
		726	1	14°22'		UF12							
									114+70.26		206.27		
				SPEC 1-CUT ELBOW w/ CUT SPIGOT								17°01' .956250 .956166	
		725	1	17°01'		UF11			114+40.00	O.R. 17°01' UP	197.00		
									114+30.05		197.00		
												0°00' .000000 1.00000	

CONTINUED FROM UU1

CONTRACT DRAWING REFERENCE

PIPE SIZE, TYPE AND CLASS (JOINT DETAIL) REFERENCE

LAYOUT DRAWING
STATION 114+30.05 TO STATION 118+78.02

SYMBOL	REVISION	DATE	BY	APPV'D.

Ameron UTILITY PRODUCTS GROUP

Russian River - Contract #1

DRAWN	KW	12-31-75
CHECKED		
APPV'D.		

2314 4L12.0

60-4-102.128.26

1000-1103 (7/75)

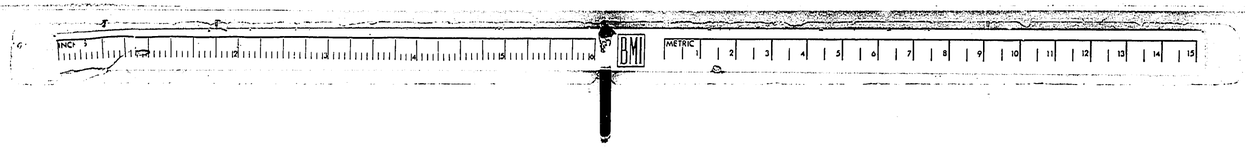

CONTINUED ON 4L14

CONTRACT DRAWING REFERENCE	PIPE SIZE, TYPE AND CLASS	(JOINT DETAIL) REFERENCE	BID ITEM	UNIT LENGTH	PIECE NO.	NO. REQ'D	DESCRIPTION	DETAIL DWG. REF.	SLOPE / HORIZ.	DIST.	PLAN LOOKING IN DIRECTION OF LAYING	INV STATION–READ UP	PULL, BEVEL OR TURN	INV. ELEVATION	SLOPE TANGENT COSINE	PROFILE NOTE: VIEW FROM RIGHT SIDE OF PIPE
60-4-102.109	43 SC 260 10GA	(260)	010				SPEC 1-CUT ELBOW		12.28 / 12.06			122+62.06		249.29	10°45' .1900000 .982424	
					745	1	8°22'	4F46	29.01 / 28.99			122+50.00	8°22' UP			
		122+00			744	1	STD SECT	5	41.00 / 40.96			122+27.01		245.79		
					743	1	SPEC w/ CCP BELL & WSP SPIGOT	4F22	40.69 / 40.65			121+80.05		244.09		
							SPEC 2-CUT ELBOW		9.40 / 9.39			121+39.39		242.39	2°23' .041667 .999133	
					742	1	27°42'	4F45	30.67 / 26.53			121+30.00	O.K. 27°42' DN	242.00		93.27
							SPEC 2-CUT ELBOW		4.01 / 3.47			121+03.47		226.62	30°05' .579496 .865220	
					741	1	w/ 2" P.N. 1-(33) 31°23'	4F44	17.18 / 17.18		2" P.N.	121+00.00 / 120+97.82	O.K. 31°23' UP	224.61		
		(260)			740	1	STD SECT WSP	4	41.00 / 40.99			120+82.82		225.00	-1°17' .022567 .999745	
					739	1	STD SECT WSP	4	41.00 / 40.98			120+41.83	0°35' UP	225.93		
					738	1	SPEC w/ WSP BELL & CCP SPIGOT	4F34	41.23 / 41.21			120+00.85		227.27		
					737	1	STD SECT	5	41.00 / 40.98			119+59.64		228.62		
				+024 / +029	736A / 736	1	SPEC BEVEL w/ 2" AV TYPE B 3 M.H. 1-(419) 16-(423) 16-(427)	4F33 / 4F23 / 4F36	40.67 / 40.65		2" AV TYPE "B" 3 M.H.	119+18.67 / 118+83.02 / 118+78.02	4°36' DN	229.97 / 231.31	-1°53' .032844 .999461 / 2°43' .047649 .998867	

CONTINUED FROM 4L12

Ameron UTILITY PRODUCTS GROUP

RUSSIAN RIVER - CONTRACT #1

LAYOUT DRAWING

STATION 118+78.02 TO STATION 122+62.06

SYMBOL	REVISION	DATE	BY	APPV'D.

DRAWN	LW	12-31-75
CHECKED		
APPV'D.		

2314 4L13.0

60-4-102.128.27

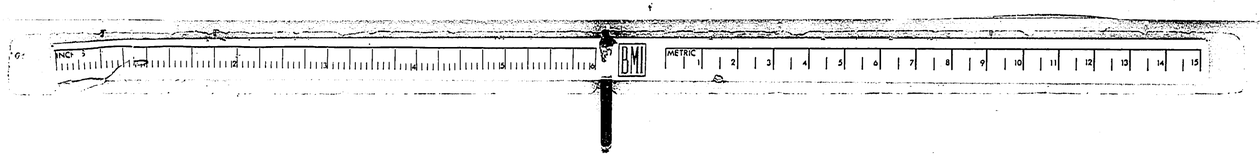

CONTINUED ON 4L15

BID ITEM	UNIT LENGTH	PIECE NO.	NO. REQ'D	DESCRIPTION	DETAIL DWG. REF.	SLOPE HORIZ.	DIST.	PLAN LOOKING IN DIRECTION OF LAYING	INV. STATION—READ UP	PULL, BEVEL OR TURN	INV. ELEVATION	SLOPE TANGENT COSINE	PROFILE NOTE: VIEW FROM RIGHT SIDE OF PIPE
									130+80.07		278.85		
010		765		763 764 765 760 761 762			S				1	0°25' .004454 .999992	
		760	6	STD SECT			S		128+84.07	0°29'UP	277.02		
		759		757 758 759								-0°04' .001124 .999999	
		757	3	STD SECT			S		127+11.07	0°14'DN	277.16		
				SPEC w/ 10" AIR VALVE & MH.									
	+025	756A	1						126+95.00		277.11	0°10' .002909 .999996	
	+089	756		1-(J4) 16-(J3) 16-(J2)					126+70.07	0°54'DN	277.04	1°04' .018580 .999827	
		755	1	SPEC BEVEL 1°28'					126+29.19	1°28'DN	276.28		
		754	4	751 752 753 754			S					2°32' .044341 .999018	
		751		STD SECT					124+65.35		269.01		
		750	1	SPEC BEVEL 2°15'					124+24.55	2°15'DN	268.20	4°45' .082939 .996546	
		749	2	STD SECT			S		123+42.84		260.34		
		748											
		747	1	SPEC BEVEL 5°00'					123+02.34	5°57'DN	256.95	10°45' .179220 .983764	
		746	1	STD SECT			S		122+62.06		249.29		

CONTINUED FROM 4J3

10" A.V. & M.H.

60-4-102.107 — 60 SC 260 — 1166' (2%) — 1244.00 (2%)

CONTRACT DRAWING NO. REFERENCE

PIPE SIZE TYPE AND CLASS

(JOINT DETAIL) REFERENCE

Ameron UTILITY PRODUCTS GROUP

RUSSIAN RIVER - CONTRACT #1

LAYOUT DRAWING
STATION 122+62.06 TO STATION 130+80.07

SYMBOL	REVISION	DATE	BY	APPV'D.

DRAWN LW 1-2-76
CHECKED

2314 4L14.0

60-4-102.128.28

1000-1003 (7/75)

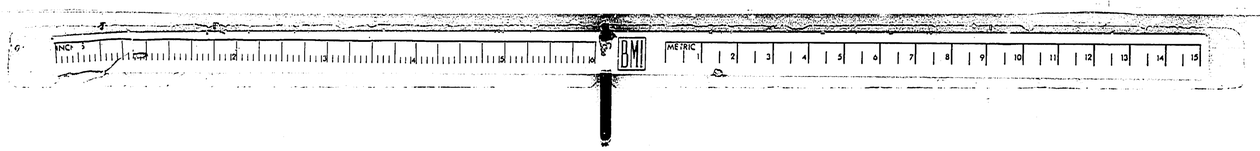

CONTINUED ON 4L16

BID ITEM / BILLING	UNIT LENGTH	PIECE NO.	NO. REQ'D	DESCRIPTION	DETAIL DWG. REF.	SLOPE HORIZ.	SLOPE DIST.	PLAN LOOKING IN DIRECTION OF LAYING	INV. STATION–READ UP	PULL, BEVEL OR TURN	INV. ELEVATION	SLOPE TANGENT COSINE	PROFILE NOTE: VIEW FROM RIGHT SIDE OF PIPE
010		784	1	SPEC BEVEL 2°24'	1 LFH		41.00		138+58.35		259.72	-0°24' .004193 .999976	
		783	1	STD SECT	S		41.06						
		782	1	STD SECT	S		41.01		138+17.35	2°24' UP	260.00	-2°48' .048990 .998808	
		781	1	SPEC BEVEL 1°31'	LFH		41.00		137+76.34	0°50' UP	262.00		
		780	3	STD SECT	S		40.89		137+35.42		264.60	-3°38' .063563 .997980	
		779					123.00		136+94.61	1°31' DN	267.20		
		778					122.92		135+71.70		271.73		
		777	1	SPEC BEVEL 1°23'	LFB		40.90		135+30.82	1°23' DN	273.24	-2°00' .034898 .999390	
		776	2	STD SECT	S		82.00		134+48.82		274.28		
		775					81.99		134+07.83	0°41' DN	274.80	-0°43' .012631 .999920	
		774	1	STD SECT	S		41.00						
		773		770 771 772 773			164.00		132+43.83		274.89	-0°02' .000553 1.000000	
		770	4	STD SECT	S		164.00		132+02.83	1°48' UP	274.91		
		769	1	SPEC BEVEL 1°48'	LFB		41.00		131+20.88		277.54	-1°50' .032113 .999485	
		768	2	STD SECT	S		82.00		130+25.07	O.K.			
		767					81.96		130+80.07	2°16' DN	278.85	0°25' .004364 .999972	
		766A	1	SPEC BEVEL	LFB		40.83						
		766		4" 2"AV. TYPE "B" & MH 2°16'	LFB		40.81						
				1-(49) 16-(42) 16-(41)									

CONTINUED FROM 4L14

2"AV. TYPE "B" & MH

CONTRACT DRAWING REFERENCE

PIPE SIZE, TYPE AND CLASS

(JOINT DETAIL) REFERENCE

LAYOUT DRAWING
STATION 130+80.07 TO STATION 138+58.35

Ameron UTILITY PRODUCTS GROUP

RUSSIAN RIVER - CONTRACT #1

SYMBOL	REVISION	DATE	BY	APPV'D.

DRAWN	DW	1-2-76	
CHECKED			
APPV'D.			

2314 4L5.0

60-4-102.128.29

1000-1003 (7/75)

CONTINUED ON 4L17

CONTRACT DRAWING REFERENCE	PIPE SIZE, TYPE AND CLASS (JOINT DETAIL REFERENCE)	BID ITEM	UNIT LENGTH	PIECE NO.	NO. REQ'D	DESCRIPTION	DETAIL DWG. REF.	SLOPE HORIZ.	DIST.	PLAN LOOKING IN DIRECTION OF LAYING	INV STATION–READ UP	PULL, BEVEL OR TURN	INV ELEVATION	SLOPE TANGENT COSINE	PROFILE NOTE: VIEW FROM RIGHT SIDE OF PIPE
60-4-102.108	48 SC 260 (240) 106A	010		816		813 814 815 816 808 809 810 811 812		369.00 368.97			151+70.06		239.53		
				808	9	STD SECT	S				148+01.08		243.88	-0°40' .011777 .999931	
				807	1	STD SECT	S	41.00 41.00			147+60.09	0°42' UP	244.36		
				806		805 806 802 803 804		205.00 204.94							
				802	5	STD SECT	S				145+55.15		249.28		
			+029	801A 801N	1	SPEC w/ 18" M.H. 1-(419) 16-(423) 16-(427)	4F19 4F22	41.00 40.99		18" M.H.	145+50 145+14.16		250.27		
				800		798 799 800 794 795 796 797		287.00 286.92							
				794	7	STD SECT	S				142+27.24	0°58' DN	257.16	-1°22' .024030 .999711	
				793	1	STD SECT	S	41.00 41.00			141+86.24		257.45		
				792	1	STD SECT	S	41.04 41.04			141+45.20	1°08' RT	257.73		
				791	1	SPEC BEVEL 3°52'	4F4	40.86 40.86			141+13.80 5°01' 4.5" O.K. 141+04.34	3°52' RT	258.01		
				790		788 789 790 785 786 787		246.00 245.99							
				785	6	STD SECT	S				138+58.35		259.72	-0°24' .006933 .999976	

CONTINUED FROM 4L15

BILLING

LAYOUT DRAWING
STATION 138+58.35 TO STATION 151+70.06

SYMBOL	REVISION	DATE	BY	APPV'D.

Ameron UTILITY PRODUCTS GROUP

RUSSIAN RIVER - CONTRACT #1

DRAWN	KW	1-5-76
CHECKED		
APPV'D.		

2314 4L16.0

60-4-102.128.30

1000-1003 (7/75)

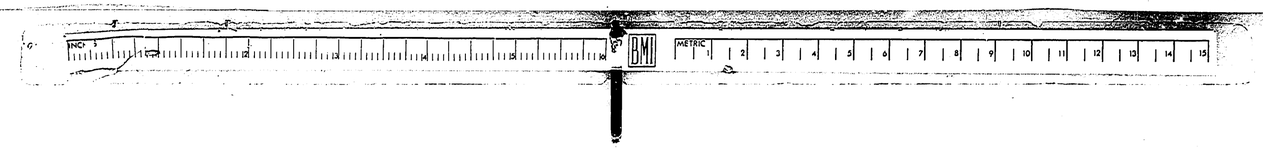

CONTINUED ON 4U8

CONTRACT DRAWING REFERENCE	PIPE SIZE TYPE AND CLASS (JOINT DETAIL REFERENCE)	BID ITEM	UNIT LENGTH	PIECE NO.	NO. REQ'D	DESCRIPTION	DETAIL DWG. REF.	SLOPE HORIZ.	DIST.	PLAN LOOKING IN DIRECTION OF LAYING	INV. STATION—READ UP	PULL, BEVEL OR TURN	INV. ELEVATION	SLOPE TANGENT COSINE	PROFILE NOTE: VIEW FROM RIGHT SIDE OF PIPE
60-4-102.108	48SC 260 10GA. (260)	010		837		834 835 836 837		164.00 164.00			160+30.75		224.85		
				834	4	STD SECT	S								
				833	1	SPEC BEVEL 1°49' V	4F4	41.00 41.00			158+66.75		224.97	-0°02' .000732 1.00000	
											158+25.75	1°49' UP	225.00	-1°52' .032691 .999466	
				832	1	STD SECT	S	41.00 40.98			157+84.77	0°09' UP	226.34		
				831		829 830 831 826 827 828		246.00 245.85							
				826	6	STD SECT	S								
				825	1	SPEC BEVEL 1°35' V	4F4	40.89 40.86			155+38.93		235.06	-2°02' .035487 .999371	
				824		821 822 823 824		164.00 164.00			154+98.06	1°35' DN	236.51		
				821	4	STD SECT	S				153+34.07		237.77	-0°26' .007643 .999971	
				820	1	STD SECT	S	41.01 41.01			152+93.06	0°14' UP	238.08		
				819	1	STD SECT	S	41.00 41.00			152+52.06		238.56		
	152+50 (240)			818	1	STD SECT	S	41.01 41.01			152+11.06	0°20' LT	239.05		
				817	1	STD SECT	S	41.00 41.00			151+70.06	0°05' LT	239.53	-0°40' .011777 .999931	

CONTINUED FROM 4U6

Ameron UTILITY PRODUCTS GROUP

RUSSIAN RIVER - CONTRACT #1

LAYOUT DRAWING
STATION 151+70.06 TO STATION 160+30.75

SYMBOL	REVISION	DATE	BY	APPV'D.

DRAWN	KW	1-5-76
CHECKED		
APPV'D.		

2314 4U7.0

1000-1003 (7/75)

60-4-102.128.31

OFFICE 4L18

CONTINUED ON 4L19

BID ITEM	UNIT LENGTH	PIECE NO.	NO. REQ'D	DESCRIPTION	DETAIL DWG. REF.	SLOPE	PLAN	INV. STATION—READ UP	PULL, BEVEL OR TURN	INV. ELEVATION	SLOPE TANGENT COSINE	PROFILE NOTE: VIEW FROM RIGHT SIDE OF PIPE
010		852 / 851	2	STD SECT WSP	3	82.00 / 81.95		166+18.13		214.47		
		850 / 849	2	STD SECT WSP	4	82.00 / 81.95		165+36.18		217.24		
		848	1	SPEC w/ WSP BELL & CCP SPIGOT	4F34	41.23 / 41.21		164+54.23		220.02		
		847	1	SPEC BEVEL 1°33'	4F4	40.89 / 40.87		164+13.02		221.41	-1°56' .033846 .999428	
		846		844 845 846		123.00 / 123.00		163+72.16	1°33' DN	222.79		
		844	3	STD SECT	5			162+49.16		223.62		
				SPEC 1-CUT ELBOW		33.67 / 33.67		162+15.49	14°38' RT	223.85		
		843	1	w/ CUT SPIGOT & 2" PASSHOLE 1-(432) 14°38'	4F49	7.33 / 7.33	2" P.H.	162+12.16				
		842	1	STD SECT	5	41.00 / 41.00		162+08.16		223.90		
		841 / 840	2	STD SECT	5	82.00 / 82.00		161+67.16		224.18		
		839	1	SPEC SHORT	4F48	13.41 / 13.41		160+85.16		224.73	-0°23' .006765 .999977	
		838A		SPEC w/ MANHOLE	4F19	16.75 / 16.75		160+71.75	0°20' DN	224.82		
	+029	838	1	[illegible]	4F47	24.25 / 24.25	18" M.H.	160+55.00		224.83		
								160+30.75		224.85	-0°02' .000732 1.00000	

CONTINUED FROM 4L17

CONTRACT DRAWING REFERENCE: 60-4-102.109; 60-4-102.103

PIPE SIZE TYPE AND CLASS (JOINT DETAIL REFERENCE): 4AS:320 (BOH); 4BSC 260 (BOH) (260)

APPROVED AS CORRECTED
By ..... Date .....
SONOMA COUNTY WATER AGENCY

APPROVED
By Hans Date 4-13-76
SONOMA COUNTY WATER AGENCY

RECEIVED APR 12 1976 SONOMA COUNTY WATER AGENCY

APPROVED MAR 9 1976

Ameron UTILITY PRODUCTS GROUP

RUSSIAN RIVER - CONTRACT #1

LAYOUT DRAWING
STATION 160+30.75 TO STATION 166+18.13

SYMBOL	REVISION	DATE	BY	APPV'D.
△	delete 12' OL from Pc No 838			

DRAWN KW 1-5-76
CHECKED
APPV'D.

2314 4L18.1

60-4-102.128.32

CONTINUED ON 5L

CONTRACT DRAWING REFERENCE	PIPE SIZE TYPE AND CLASS (JOINT DETAIL REFERENCE)	BID ITEM	UNIT LENGTH	PIECE NO.	NO. REQ'D	DESCRIPTION	DETAIL DWG. REF.	SLOPE HORIZ.	DIST.	PLAN LOOKING IN DIRECTION OF LAYING	INV. STATION—READ UP	PULL, BEVEL OR TURN	INV. ELEVATION	SLOPE TANGENT COSINE	PROFILE NOTE: VIEW FROM RIGHT SIDE OF PIPE
60-4-102.109	48 SC 260 10GA (260)	010		872 / 866	1	866 867 868 869 870 871 872 / STD SECT	4	287.00 / 286.71			173+96.60		230.23		
				865	1	SPEC BEVEL 4°54'	4F4	40.82 / 40.78		EQN	171+09.89 AHD / 171+00.06 BK	BASE LINE STATION	217.38		
				864	1	STD SECT	5	41.00 / 40.96			170+59.28	4°54' LT	215.54		
				863	1	SPEC w/ CCP BELL & WSP SPIGOT	4F22	40.64 / 40.65			170+18.32		213.70		
				862	1	SPEC BEVEL 1°21'	4F2	40.97 / 40.93			169+77.67	1°21' LT	211.90	2°34' / .044812 / .998997	
						SPEC 2-CUT ELBOW w/ EXTRA CYL FOR FIELD		31.56 / 31.56			169+36.74	2°33' UP	210.06		
				861	1	CLOSURE # 2" P.H. 1-(433) w/ BEVELED BELL 2°33' 34°01'	4F52 / 4F2	(9.53) / 6.53 / 6.53			169+06.74 / 169+05.18	34°01' LT	210.05		OK/PLOT W/ SWING PIPE LINE STATION (NOT BASE LINE)
				860	1	SPEC SHORT	4F53	31.47 / 31.47			168+98.65		210.05		
	48 SC 320 8GA (280)		+015	859	1	STD	3	41.00 / 41.00			168+67.18		210.03		
				858	1	SPC w/ 12" O.L.	4F27A	41.00 / 41.00		12" Turnout Type B (2)	168+26.18 / 167+90.18	5°28' LT / 0°20' UP	210.00	0°01' / .000419 / 1.00000	
				857	1	SPEC BEVEL 5°00'	4F2	41.82 / 41.82			167+85.18			-0°19' / .005610 / .999984	
				856	1	SPEC BEVEL 1°37'	4F2	41.00 / 40.98			167+43.36	1°37' UP	210.23		
			+029	855A / 855	1	SPEC w/ 18" M.H. 1-(419) 16-(423) 16-(427)	4F19 / 4F18	41.00 / 40.98		18" M.H.	167+02.38 / 166+75		211.62		
			+1/2 021 / +1/2 025	854	1	SPEC w/ 2" AV & FLANGED END	4F51	10.78 / 10.77		2" AV	166+61.40 / 166+51.63 / 166+50.63		213.00		
						48" BUTTERFLY VALVE (BY OTHERS)		1.25 / 1.25					213.37		
			+029 / +1/2 021 / +1/2 025	853A / 853	1	SPEC w/ 18" M.H. & 2" A.V. & FLGD END 1-(419) 16-(423) 16-(427)	4F19 / 4F50	31.26 / 31.24		2" AV. / 18" M.H.	166+49.38 / 166+48.38 / 166+25 / 166+18.13		213.41 / 214.47	-1°56' / .033846 / .999428	

CONTINUED FROM 4L18

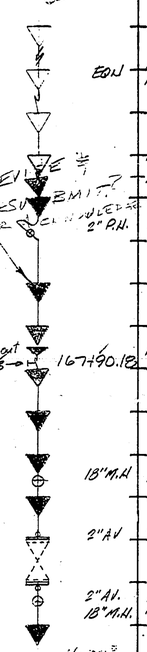

APPROVED MAR 9 1976

Ameron UTILITY PRODUCTS GROUP

RUSSIAN RIVER - CONTRACT #1

LAYOUT DRAWING
STATION 166+18.13 TO STATION 173+96.60

SYMBOL	REVISION	DATE	BY	APPV'D.
2	Add 12" O.L. to Pc No 858	4/9/76	RB	
1	Revised From 169+43.36 To 171+09.89	3-9-76	KW	

DRAWN	KW	1-5-76
CHECKED		
APPV'D.		

2314 4L19.2

1000-1003 (7/75)

60-4-102.128.33

CONTINUED ON SL2

CONTRACT DRAWING REFERENCE	PIPE SIZE, TYPE AND CLASS	(JOINT DETAIL) REFERENCE	BID ITEM / BILLING	UNIT LENGTH	PIECE NO.	QTY.	DESCRIPTION	DETAIL DWG. REF.	SLOPE / HORIZ. DIST.	PLAN LOOKING IN DIRECTION OF LAYING	INV. STATION—READ UP	PULL, BEVEL OR TURN	INV. ELEVATION	SLOPE TANGENT COSINE	PROFILE NOTE: VIEW FROM RIGHT SIDE OF PIPE
			010	60'-4"-105.109 / 40'-3" 2@0 10.66 (380)	892		890 891 892		123.00 / 122.74		181+96.20		232.75		
					890	3	STD SECT	S			180+72.47		224.69		
					889	1	SDEC BEVEL	EFI	41.00 / 40.91	3°45'	180+32.55	3°45' UP	222.01	3°45' .0656550 .9978572	
					888	1	SDEC SHOLT	SF7	21.43 / 21.43		180+11.12		222.01	0°00' 1.00000 1.000000	
					887	1	SDEC BEVEL	EFI	41.00 / 41.00	2°49'	179+70.12	2°49' UP	222.01		
					886 885	2	STD SECT	S	82.00 / 81.90		178+88.22		226.08	-2°49' -.0488465 .9988075	
					884	1	SDEC BEVEL	SFI	41.85 / 40.80	1°59'	178+47.42	1°59' DN	228.04		
					883		879 880 881 882 883		205.00 / 204.98					-0°52' .0145539 .9998941	
					879	5	STD SECT	S			176+42.44	0°42' DN	231.02		
					878		875 876 877 878		164.00 / 164.00						
					875	4	STD SECT	S			174+78.44		231.40	-0°28' .0022351 .9999997	
			+029 +027		874A 874	1	SDEC BEVEL w/ 8" A.V. & M.H. 1-(550) 16-(523) 16-(531)	EFO SFS SFI	40.86 / 40.86	1°54'	174+50.00 / 174+37.58	1°54' DN	231.50	1°46' .0309976 .9995521	PRELIMINARY FEB 6 1976
					873	1	STD SECT	S	41.00 / 40.98		173+96.60	0°47' DN	230.23	2°34' .0449817 .9989947	

8"A.V. & M.H.

CONTINUED FROM SL19

RECEIVED MAR 29 1976

RECEIVED APR 28 1976 SONOMA COUNTY WATER AGENCY

RECEIVED SEP 10 1976 SONOMA COUNTY WATER AGENCY

APPROVED By Harm Date 32476 SONOMA COUNTY WATER AGENCY

SF9.0 ; SF30.0

2) REVISE & RESUBMITT SL3.0; SL6.0; SL12.0; SL13.0; SL14.0

Ameron UTILITY PRODUCTS GROUP

RUSSIAN RIVER - CONTRACT #1

DRAWN KW 1-16-76

CHECKED

APPV'D.

LAYOUT DRAWING STATION 173+96.60 TO STATION 181+96.20

SYMBOL	REVISION	DATE	BY	APPV'D.

2314 SL1.0

60-4-102.128.34

1000-1003 (7/75)

CONTINUED ON SL3

CONTRACT DRAWING REFERENCE	PIPE SIZE, TYPE AND CLASS (JOINT DETAIL) REFERENCE	BID ITEM	UNIT LENGTH	PIECE NO.	NO. REQ'D	DESCRIPTION	DETAIL DWG. REF.	SLOPE HORIZ.	SLOPE DIST.	PLAN LOOKING IN DIRECTION OF LAYING	INV. STATION–READ UP	PULL, BEVEL OR TURN	INV. ELEVATION	SLOPE TANGENT COSINE	PROFILE NOTE: VIEW FROM RIGHT SIDE OF PIPE
		BILLING													
	60-4-102.109														
	48 SC 800 (20") 060A (20")	010		900	1	STD SECT WSP	3		41.06						
				901					41.01						
						905 906 907			123.06						
				905	3	STD SECT WSP	3		122.99						
				904	1	STD SECT WSP	3		41.00						
				903	1	SPEC BEVEL w/ 2" P.N. 1-(6F4) 205'.	5F11		40.35						
							5F3		40.79						
				902	1	STD SECT WSP	1		40.41						
				901	1	SPEC BEVEL 3°40'	5F8		41.00						
				900		899 900 896 897 898			40.62						
									40.78						
									40.62						
									205.00						
									204.40						
				896	5	STD SECT WSP	4								
		+029 +080		895A 895	1	SPEC BEVEL SECT w/ 4°40' 4°16' TYPE "B" 1-(6F3) 16-(6F5) 16-(6F1)	5F10 5F9 5F8		40.69 40.69	2" P.N.	183+18.85 183+10.00	4°16' DN	232.89	+.2050 .051442 .998679	
										"B" TYPE ≠ M.H.					
				894	1	STD SECT WSP	4		41.00 41.00		182+73.16		232.91		
											182+37.16		232.53	-.3°46' .065796 .997826	
						SPEC 4" CUT ELBOW w/ WSP BELL x SCD BEVELED			41.13 41.13		182+33.08	9°24' RT	232.82	-4°54' .085495 .996340	
				893	1	S.DIGOT 3°38' 9°24'	5F6		36.83 36.83		131+96.20	3°38' DN	232.75	-7°49' .137259 .990511	
														-11°09' .192728 .981366	
														0°01' .000244 .999948	
														-3°45' .065650 .997852	

CONTINUED FROM SL1

Ameron	UTILITY PRODUCTS GROUP
RUSSIAN RIVER – CONTRACT #1	

LAYOUT DRAWING									
STATION 181+96.20	TO	STATION 188+49.61	SYMBOL	REVISION	DATE	BY	APPV'D.	DRAWN LW 1/16/76	
								CHECKED	
								APPV'D.	

2314 SL2.0

60-4-102.128.35

1000-2003 (7/75)

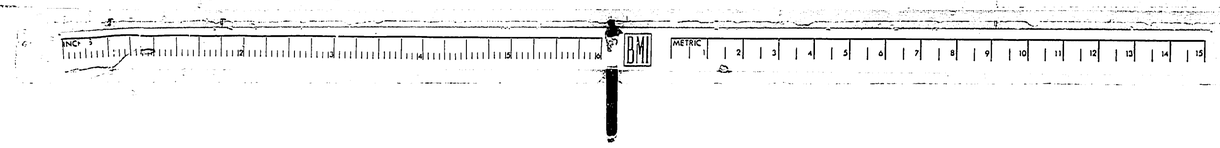

OFFICE SLB

OK

CONTINUED ON SL4

BID ITEM	UNIT LENGTH	PIECE NO.	NO. REQ'D	DESCRIPTION	DETAIL DWG. REF.	SLOPE HORIZ.	DIST.	PLAN LOOKING IN DIRECTION OF LAYING	INV. STATION–READ UP	PULL, BEVEL OR TURN	INV. ELEVATION	SLOPE TANGENT COSINE	PROFILE NOTE: VIEW FROM RIGHT SIDE OF PIPE
010		930	1	STD SECT		B			197+43.58		88.91	-3°57' .997642 .997611	
		929	1	SDEC BEVEL 1°26'		SEE B			197+00.68	1°26' UP	91.74	-5°34' .995088 .995274	
		928	1	SDEC BEVEL 1°51		SEE B			196+61.87	1°51' UP	95.72	-7°23' .992509 .992474	
		927	1	SDEC BEVEL 2°11'		B			196+21.20	2°11' UP	101.00	-9°37' .986411 .986349	
		926	1	SDEC BEVEL w/2" P.H. 1-(5th) 3°10'		SEE 11 SEE B		2"P.H.	195+90.77 195+78.77	3°10' UP	107.95	-12°45' .976283 .976235	
		925	1	SDEC BEVEL 1°53'		SEE B			195+40.93	1°28' UP	116.90		
		924	1	STD SECT W50		B			195+01.66		121.02	-14°13' .969877 .969762	
		923	1	SDEC BEVEL 5°13'		SEE B			194+61.38	5°13' DN	127.17	-9°50' .984477 .984558	
		922	1	SDEC BEVEL 3°51'		SEE B			194+21.19	3°51' DN	148.53		
		921 920	2	STD SECT		B			193+80.68		147.19		
		919	1	SDEC w/ 2" P.H. 1-(5th)		SEE B		2"P.H.	193-98.96 192+96.96		154.55		
		918 917	7	912 913 914 915 916 917 918 STD SECT W50		B			192+58.18		158.28	-5°39' .995776 .995959	
		911	1	SDEC BEVEL w/2" P.H. 1-(5th) 2°12'		SEE 11 SEE B		2"P.H.	189+73.29 189+73.29	2°12' DN	184.01		
		910 909	2	STD SECT W50		B			189+31.51		186.11		
									188+49.61		190.32	-2°50' .998142 .998179	

CONTINUED FROM SL2

APPROVED
By ... Date 4-22-76
SONOMA COUNTY WATER AGENCY

PRELIMINARY
APR 19 1976

RELEASED
APR 20 1976

RECEIVED
APR 21 1976
SONOMA COUNTY WATER AGENCY

Ameron UTILITY PRODUCTS GROUP

RUSSIAN RIVER - CONTRACT #1

SYMBOL	REVISION	DATE	BY	APP'V'D.
1	lower el. @ sta 196+21.20			

DRAWN LJD 4-19-76
CHECKED
APP'V'D.

LAYOUT DRAWING
STATION 188+49.63 TO STATION 197+43.58

2314 SL3.1

60-4-102.128.36

1000-1003 (7/75)

CONTINUED ON SL5

CONTRACT DRAWING REFERENCE	PIPE SIZE, TYPE AND CLASS (JOINT DETAIL REFERENCE)	BID ITEM	UNIT LENGTH	PIECE NO.	NO. REQ'D	DESCRIPTION	DETAIL DWG. REF.	SLOPE HORIZ.	DIST.	PLAN LOOKING IN DIRECTION OF LAYING	INV. STATION–READ UP	PULL, BEVEL OR TURN	INV. ELEVATION	SLOPE TANGENT COSINE	PROFILE NOTE: VIEW FROM RIGHT SIDE OF PIPE
60-4-102.110	48SC 360 3/16 R (360)	010		957	1	SPEC BEVEL 4°21'	SF1	41.00 40.30			208+47.58		125.35	10°36' .187328 .982903	
				956	1	STD SECT	S	41.00 40.76			208+07.28	4°21' UP	117.80		
				955	1	SPEC BEVEL 4°30'	SF1	41.00 40.76			207+66.52		113.33	6°15' .109500 .994058	
				954	1	STD SECT	S	41.00 40.98			207+25.76	4°30' UP	108.87		
				953	1	SPEC BEVEL 3°41'	SF1	40.73 40.71			206+84.78		107.62	1°44' .030410 .999538	
				952	1	STD SECT	S	41.00 40.82			206+44.07	3°41' DN	106.39		
				951 950 949	3	STD SECT	S	123.00 122.45			206+03.26		102.51		
				948	1	SPEC BEVEL 2°54'	SF1	41.00 40.82			204+80.81		90.88	5°25' .095005 .995517	
				947	1	SPEC BEVEL 2°30'	SF1	41.00 40.96			204+39.99	2°54' UP	87.00	2°31' .044074 .999030	
	48SC 440 4GA (400)			946		940 941 942 943 944 945 946 934 935 936 937 938 939		533.00 533.00			203+99.03	2°30' UP	85.19		
				934	13	STD SECT	S								
				933	1	SPEC W/ CCP BELL & WSP SPIGOT	SF1S	40.69 40.69			198+66.03		85.01	0°01' .000336 1.0000	
			+029	932A 932	1	SPEC BEVEL W/ 18" M.H. 1-(532) 16-(525) 16-(531) 1°31'	SF1L SF1 SF2	41.00 40.99		18" M.H.	198+25.34 198+10	1°31' UP	85.00	-1°30' .026421 .999651	
			+020	931A 931	1	SPEC BEVEL W/ 8" BLOWOFF TYPE "A" 4°10'	SF1S SF1V SF2	40.88 40.78		8" B.D. TYPE "A"	197+84.36 197+80	3°23' LT 2°27' UP 4°10' CB	86.08		
						1-(516) 2-(526) 4-(529)					197+43.58	1°04' LT	88.91	-3°57 .069242 .997611	

CONTINUED FROM SL3

Ameron UTILITY PRODUCTS GROUP

RUSSIAN RIVER – CONTRACT #1

LAYOUT DRAWING

STATION 197+43.58 TO STATION 208+47.58.

SYMBOL	REVISION	DATE	BY	APPV'D.

DRAWN	KW	1-19-76
CHECKED		
APPV'D.		

2314 SL4.0

1000-1003 (7/75)

60-4-102.128.37

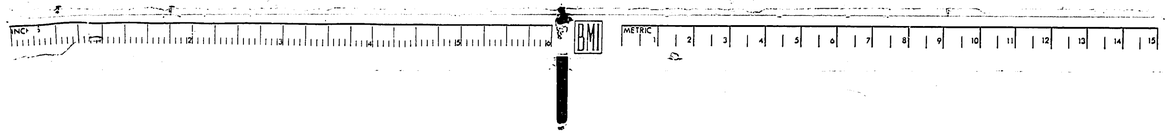

CONTINUED ON SL6

BID ITEM	UNIT LENGTH	PIECE NO.	NO. REQ'D	DESCRIPTION	DETAIL DWG. REF.	SLOPE HORIZ.	SLOPE DIST.	PLAN LOOKING IN DIRECTION OF LAYING	INV. STATION—READ UP	PULL, BEVEL OR TURN	INV. ELEVATION	SLOPE TANGENT COSINE	PROFILE NOTE: VIEW FROM RIGHT SIDE OF PIPE
									215+41.38		111.22		
010		977	1	SPEC BEVEL 2°06'	SF1				41.00 / 40.96			-2°40' .040625 .999175	
		973 / 972 / 971	3	STD SECT	S				123.00 / 122.57	2°06' UP	113.13		
		970	1	SPEC BEVEL 2°53'	SF1				41.79 / 40.65		123.36	-4°46' .082447 .996537	
		969	1	STD SECT	S				41.00 / 40.98		126.75		
		968	1	SPEC BEVEL 3°29'	SF1				41.00 / 40.98		128.10	-1°53' .032690 .999459	
		967 / 966	2	STD SECT	S				82.00 / 81.64	3°29' UP	129.45		
		965	1	SPEC BEVEL w/ CUT SPIGOT 5°00'	SF1				40.64 / 40.46		137.12	-5°42' .084018 .996469	
+029 +026		964A / 964	1	SPEC w/ 4" A.V. TYPE 'B' 1-(S30) 16-(S5) 16-(S31)	SF10 / SF5			L"A.V." TYPE 'B' 5 M.H.	41.00 / 41.00	5°23' DN	140.93		
		963	1	STD SECT	S			211+28.14	41.00 / 41.00		140.91	0°01' .000291 1.00000	
		962	1	SPEC BEVEL 2°26'	SF1			210+92.14	40.82 / 40.82	0°50' DN	140.90	.005' .014856 .999890	
		961	1	SPEC BEVEL 2°37'	SF1				40.81 / 40.74	2°26' DN	140.30	3°37' .057414 .998356	
		960 / 959	2	STD SECT	S				82.00 / 81.57	2°37' DN	137.96		
		958	1	SPEC BEVEL 4°43'	SF1				40.66 / 40.44		129.58	5°54' .103362 .994701	
								CONTINUED FROM SL4	208+49.58	4°43' DN	125.35	10°36' .187328 .982903	

CONTRACT DRAWING REFERENCE

PIPE SIZE, TYPE AND CLASS

(JOINT DETAIL) REFERENCE

60.4-102.110

18 SC 360 9/16" RE (360)

(360)

Ameron UTILITY PRODUCTS GROUP

RUSSIAN RIVER - CONTRACT #1

LAYOUT DRAWING

STATION 208+49.58 TO STATION 215+41.38

SYMBOL	REVISION	DATE	BY	APPV'D.

DRAWN	LW	1-19-76	
CHECKED			
APPV'D.			

2314 SLS.0

60-4-102.128.38

1000-1003 (7/75)

CONTINUED ON SL7

CONTRACT DRAWING REFERENCE	PIPE SIZE, TYPE AND CLASS (JOINT DETAIL REFERENCE)	BID ITEM	UNIT LENGTH	PIECE NO.	NO. REQ'D	DESCRIPTION	DETAIL DWG. REF.	SLOPE HORIZ.	DIST.	PLAN LOOKING IN DIRECTION OF LAYING	INV. STATION—READ UP	PULL, BEVEL OR TURN	INV. ELEVATION	SLOPE TANGENT COSINE	PROFILE NOTE: VIEW FROM RIGHT SIDE OF PIPE
60-4-102.111	48SC 440 4GA. (380)	010		1003	1	SPEC BEVEL 3°20'	SF2	40.76 40.76			227+29.20		99.37	0°05' .001641 .999999	
				1002		999 1000 1001 1002		164.00 163.70			226+88.44	3°20' DN	99.30		
				999	4	STD SECT	S								
				998	1	SPEC BEVEL 3°25'	SF1	41.00 40.93			225+24.74		89.46	3°26' .060126 .998197	
				997	1	STD SECT	S	41.00 41.00			224+83.81	3°25' UP	87.00		
				996	1	STD SECT	S	41.06 41.06			224+42.81		86.99	0°01' .000321 1.00000	
				995	1	SPEC BEVEL 2°56'	SF1	40.89 40.89			224+01.75	0°50' UP	86.97		
				994	1	SPEC BEVEL 1°53'	SF1	40.93 40.93			223+60.86	2°56' LT	87.56		
60-4-102.110				993		990 991 992 993 985 986 987 988 989		369.00 368.96			223+19.94	1°53' LT	88.15		
				985	9	STD SECT	S								
				984	1	SPEC BEVEL 1°50'	SF1	41.00 41.00			219+50.98		93.45	-0°49' .014356 .999897	
	48SC 360 3/16 (360)			983 978	6	978 979 980 981 982 983 STD SECT	S	246.00 245.73			219+09.98	1°50' UP	94.03		
				977 976 975	3	STD SECT	S	123.00 122.87			216+64.25		105.49		
											215+41.38		111.22	-2°40' .046625 .998915	

CONTINUED FROM SL5

LAYOUT DRAWING
STATION 215+41.38 TO STATION 227+29.20

SYMBOL	REVISION	DATE	BY	APPV'D.

Ameron UTILITY PRODUCTS GROUP

RUSSIAN RIVER - CONTRACT #1

DRAWN	KW	1-19-76
CHECKED		
APPV'D.		

2314 SL6.D

1000-1003 (7/75)

60-4-102.128.39

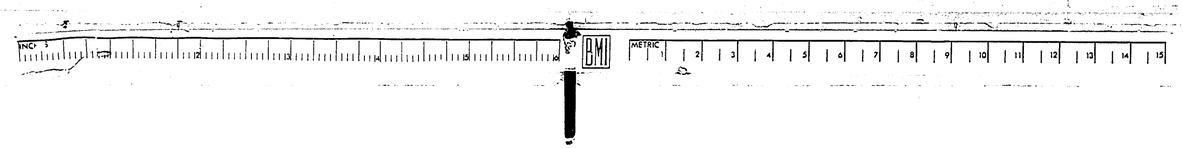

CONTINUED ON SL8

CONTRACT DRAWING REFERENCE	PIPE SIZE, TYPE AND CLASS (JOINT DETAIL REFERENCE)	BID ITEM	UNIT LENGTH	PIECE NO.	NO. REQ'D	DESCRIPTION	DETAIL DWG. REF.	SLOPE HORIZ.	DIST.	PLAN LOOKING IN DIRECTION OF LAYING	INV. STATION—READ UP	PULL, BEVEL OR TURN	INV. ELEVATION	SLOPE TANGENT COSINE	PROFILE NOTE: VIEW FROM RIGHT SIDE OF PIPE
60-4-102.11	48 SC 440 46A (380) (700)	010				1027 1028 1029 1024 1025 1026		246.00 245.92			238+35.81		78.37		
					6	STD SECT	S								
					1	STD SECT	S	41.06 41.05			235+89.89		84.81	-1°30' .026199 .999657	
						1018A 1019 1020 1021 1022		205.00 204.82			235+48.85	0°54' UP	85.89		
					5	STD SECT	S								
					1	SPEC BEVEL 1°21'	SF2	40.90 40.86			233+44.03		94.51	-2°24' .042066 .999116	
						1015 1016 1017		123.00 122.98			233+03.16	1°21' DN	96.22		
					3	STD SECT	S								
					1	STD SECT w/ CUT SPIGOT	SF4	41.00 40.99			231+80.19		98.48		
			+023 +029		1	SPEC w/ 2" AV TYPE C w/ M.H. 1-(533) 16-(525) 16-(531) w/ CUT SPIGOT	SF6 SF7	41.00 40.99		2" A.V. TYPE "C" w/ M.H.	231+39.19 231+05		99.23	-1°03' .018328 .999832	
						SPEC 1-CUT ELBOW w/ CUT SPIGOT		6.28 6.28			230+98.20	1°08' DN	99.98		
					1	19°42'	SF16	34.72 34.72			230+91.92	19°42' RT	99.97		
						1008 1009 1010 1011 1004 1005 1006 1007		328.00 328.00			230+57.20		99.91		
					8	STD SECT	S								
											227+29.20		99.37	0°05' .001641 .999999	

CONTINUED FROM SL6

Ameron UTILITY PRODUCTS GROUP

RUSSIAN RIVER - CONTRACT #1

LAYOUT DRAWING
STATION 227+29.20 TO STATION 238+35.81

SYMBOL	REVISION	DATE	BY	APPV'D.

DRAWN	LW	1-20-76
CHECKED		
APPV'D.		

2314 SL7.0

1000-1003 (7/75)

60-4-102.128.40

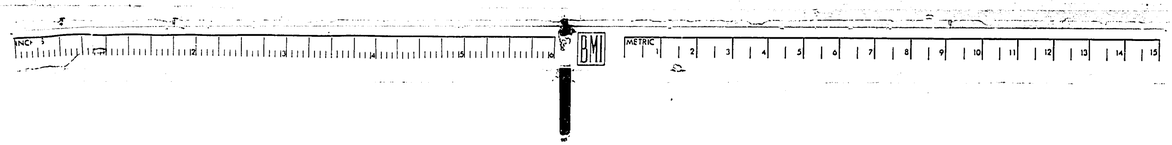

SL6

CONTINUED ON SL9

CONTRACT DRAWING REFERENCE	PIPE SIZE, TYPE AND CLASS	(JOINT DETAIL) REFERENCE	BID ITEM	UNIT LENGTH	PIECE NO.	NO. REQ'D	DESCRIPTION	DETAIL DWG. REF.	SLOPE HORIZ.	SLOPE DIST.	PLAN LOOKING IN DIRECTION OF LAYING	INV. STATION—READ UP	PULL, BEVEL OR TURN	INV. ELEVATION	SLOPE TANGENT COSINE	PROFILE NOTE: VIEW FROM RIGHT SIDE OF PIPE
			BILLING													
	60-4-102.128.11		010	40 Sc 440 (40ft)	1044	1	STD SECT	S	41.00 40.91			245+80.40		57.03		
					1045	1	SPEC BEVEL 3°35'	SF1V	40.81 40.72			245+39.69		59.78	-3°51' .997736	
					1047		1046 1047 1042 1048 1044 1043		246.00 245.94			244+93.77	3°35' DN	62.53		
					1057	6	STD SECT	S							-1°16' .022096 .999756	
			+029		1044 1041	1	SPEC w/ 19" M.H. 1-(528) 16-(52) 16-(53)	SF1C SF5	41.00 41.00		19" M.H.	243+52.68 242+50	0°56'DN	67.90		
					1040 1039 1038	3	STD SECT	S	123.00 122.99			242+11.83		68.20		
			+022		1057	1	SPEC w/ 4" THREADOLET 1-(427)	SF2H	41.00 41.00		4" O.L.	240+88.34 240+65		68.02		
					1036	1	STD SECT	S	41.00 41.00			240-47.35		69.16		
			+016		1035	1	SPEC w/ CCD BELL & USD SPIGOT & 12" TURNOUT TYPE 8'	SF7B	40.69 40.69		12" T.O. TYPE 8'	240+06.85 240-05		69.40 OK		
					1034	1	SPEC w/ USD BELL (MFD F.: ALL POST) & BEVELED CUT OUT SPIGOT 5°00'	SF7V	41.04 41.04		12" Hanger DOUBLE WELD	239+06.16		69.64		
					1033	1	SPEC SHORT BEVEL w/ CUT SPIGOT 5°00	SF2J	10.81 10.81			239+25.12	5°02' LT.	69.88 OK	-0°20' .005859 .999983	
					1032	1	SPEC SHORT w/ B.S. END 1-(534)	SF2D	18.00 17.90		FIELD CHANGE LEAD & B.S.	239+14.31	5°48' UP	69.94		
					1031	1	Spec. Short - Spigot x B.S. F.J.	SF1A	(23.00) 20.28 20.16			238+96.41		71.86		
					1030	1	SPEC BEVEL 4°38'	SF2	40.67 40.44			238+76.25		74.03	-6°08' .107398 .994283	
											CONTINUED FROM SL7	238+35.81	4°38' dn	78.37	-1°30' .028199 .999657	

Ameron UTILITY PRODUCTS GROUP

RUSSIAN RIVER - CONTRACT #1

LAYOUT DRAWING
STATION 238+35.81 TO STATION 245+80.40

SYMBOL	REVISION	DATE	BY	APPV'D.
1	Rev. from SL238+35.81 to 242+52.93	9/20/76	RB	

DRAWN	LW	1-20-76
CHECKED		
APPV'D.		

2314 SL8.1

60-4-102.128.41

1000-1003 (7/75)

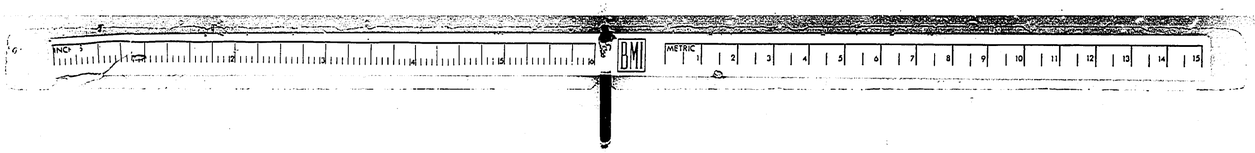

CONTINUED ON 5L10

CONTRACT DRAWING REFERENCE	PIPE SIZE, TYPE AND CLASS (JOINT DETAIL REFERENCE)	BID ITEM	UNIT LENGTH	PIECE NO.	NO. REQ'D	DESCRIPTION	DETAIL DWG. REF.	SLOPE / HORIZ.	DIST.	PLAN LOOKING IN DIRECTION OF LAYING	INV. STATION—READ UP	PULL, BEVEL OR TURN	INV ELEVATION	SLOPE TANGENT COSINE	PROFILE NOTE: VIEW FROM RIGHT SIDE OF PIPE
60-4-102.111	48SC 440 VEA (420) (400)	010	+029 +024		1	SPEC BEVEL 4°42'	SF2	40.66 40.56			254+29.55		61.25	-3°57' .069160 .997617	
					1	SPEC w/ 2"AV. TYPE "B" 1-(533) 16-(545) 16-(531)	SF18 SF5	41.00 41.00		2"A.V. TYPE "B" & M.H.	253+88.98 253+85	4°42' DN	64.05		
					1	SPEC BEVEL 3°48'	SF2	40.72 40.72			253+47.99		63.52	0°45' .018043 .999915	
					3	STD SECT	S	123.00 122.61			253+07.27	3°48' DN	62.99		
					1	SPEC BEVEL w/ CUT SPIGOT 5°00'	SF2	41.00 40.87			251+84.66		53.22	4°33' .079640 .996844	
					1	SPEC SHORT	SF25	30.63 30.63			251+43.79	5°03' UP	49.97		
					2	STD SECT	S	82.00 82.00			251+13.16		50.24		
					1	SPEC BEVEL 1°24'	SF2	41.00 41.00			250+31.16		50.97	-0°30' .008875 .999961	
					3	STD SECT	S	123.00 122.93			249+90.16	1°24' UP	51.33		
					1	SPEC BEVEL 1°52'	SF2	40.86 40.84			248+67.23		55.45	-1°55' .033523 .999439	
						1054 1055 1051 1052 1053		205.00 205.00			248+26.40	1°52' DN	56.82		
					5	STD SECT	S				246+21.40		56.99	-0°03' .000835 1.00000	
					1	SPEC BEVEL 3°48'	SF2	41.00 41.00			245+80.40	3°48' UP	57.03	-3°51' .067405 .997736	

CONTINUED FROM 5L8

Ameron UTILITY PRODUCTS GROUP

RUSSIAN RIVER - CONTRACT #1

LAYOUT DRAWING STATION 245+80.40 TO STATION 254+29.55

SYMBOL	REVISION	DATE	BY	APPV'D.

DRAWN	KW	1-20-76
CHECKED		
APPV'D.		

2314 5L9.0

60-4-102.128.42

1000-1003 (7/75)

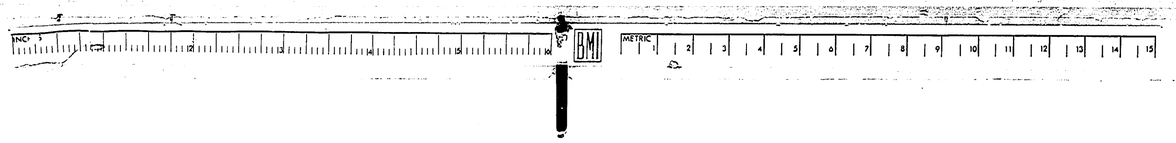

CONTINUED ON 5L11

BID ITEM	UNIT LENGTH	PIECE NO.	NO. REQ'D	DESCRIPTION	DETAIL DWG. REF.	SLOPE HORIZ.	DIST.	PLAN LOOKING IN DIRECTION OF LAYING	INV. STATION—READ UP	PULL, BEVEL OR TURN	INV. ELEVATION	SLOPE TANGENT COSINE	PROFILE NOTE: VIEW FROM RIGHT SIDE OF PIPE
010			1	SPEC BEVEL 3°29'	5F3	41.00 41.00			264+02.01	3°29' UP	36.00		
			1	STD SECT WSP	3	41.01 41.01			263+61.01		36.00	0°00' .000000 1.000000	
			1	SPEC SHORT BEVEL 5°00'	5F3	34.37 34.22			263+20.00	5°22' UP	36.00		
	+029		1	SPEC w/ 18" M.H. 1-(534) 24-(527) 24-(532)	5F32 5F31	41.00 40.82		18" MH.	262+85.78 262+70		39.22	-5°22' .094003 .995611	
			1	SPEC BEVEL 1-(536) B.S. 4°37'	5F3	40.70 40.69			262+44.96	4°37' DN	43.05	-0°45' .013175 .999918	
				1087 1088 1089 1083 1084 1085 1086		(287.00) 283.00 283.00			262+04.27	0°30' DN	43.59		
			7	STD SECT WSP	3								
			1	SPEC w/2" P.H. 1-(542)	5F11	41.00 41.00		2" P.H.	259+21.27 259+19.27		44.88		
				1077 1078 1079 1080 1081		205.00 205.00			258+80.27		45.07		
			5	STD SECT WSP	3				256+75.27	1°15' UP	46.00	-0°15' .004548 .999990	
			1	SPEC BEVEL 1°15'	5F3	41.00 40.99			256+34.29	2°26' UP	47.09	-1°31' .026506 .999649	
			1	SPEC w/ 12" PRESSURE RELIEF & M.H., WSP BEVELED BELL & CCP SPIGOT 2°26'	5F27 5F26 5F3	41.23 41.13		LINE CONTINUED ON SHT. 5L15 12" P.R. & MH.	256+20.00 255+93.15		49.93		
				1-(534) 24-(527) 24-(532) 1071 1072 1073 1074		164.00 163.61							
			4	STD SECT	5				254+29.55		61.25	-3°57' .069160 .997617	

CONTINUED FROM 5L9

CONTRACT DRAWING REFERENCE | PIPE SIZE, TYPE AND GRASS | (JOINT DETAIL REFERENCE)

(440) | 48 SC 446 46A | (420) | (400)

60-4-102.112

BILLING

LAYOUT DRAWING
STATION 254+29.55 TO STATION 264+02.01

SYMBOL	REVISION	DATE	BY	APPV'D.

Ameron UTILITY PRODUCTS GROUP

RUSSIAN RIVER - CONTRACT #1

DRAWN	KW	1-20-76
CHECKED		
APPV'D.		

2314 5L10.0

1000-1003 (7/75)

60-4-102.128.43

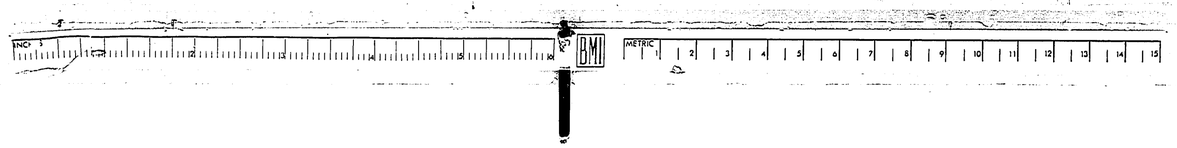

SL11

CONTINUED ON SL12

CONTRACT DRAWING REFERENCE	PIPE SIZE, TYPE AND CLASS (JOINT DETAIL) (REFERENCE)	BID ITEM	UNIT LENGTH	PIECE NO.	NO. REQ'D	DESCRIPTION	DETAIL DWG. REF.	SLOPE HORIZ.	SLOPE DIST.	PLAN LOOKING IN DIRECTION OF LAYING	INV. STATION—READ UP	PULL, BEVEL OR TURN	INV. ELEVATION	SLOPE TANGENT COSINE	PROFILE NOTE: VIEW FROM RIGHT SIDE OF PIPE
		010		1107	1	SPEC BEVEL 1°42'	SF3	40.68 40.86			269+47.57	1°42' DL	45.93	0°01' 1.000342 1.00000	
				1106	1	STD SECT W.S.P.	3	41.00 40.98			269+06.71		44.70		
				1105	1	SPEC w/ 2" P.H. 1-SF11	SF11	41.00 40.98			268+65.73 2"P.H. 268+08.73		43.46		
				1104	1	STD SECT W.S.P.	3	41.00 40.98			268+24.74		42.23		
				1103	1	SPEC BEVEL 10°43'	SF3	41.00 41.00			267+83.76	10°43' UP	41.00	10°43' .982564 .185154	
				1102	1	STD SECT	3	41.00 41.00			267+42.76		41.00		
						SPEC 1-CUT ELBOW		33.64 33.64			267+01.76		40.99		
				1101	1	16°16'	SF24	7.36 7.36			266+68.12	16°16' RT	40.99		
				1100	1	SPEC SHORT	SF33	13.16 13.16			266+60.76		40.99		
				1099	2	STD SECT W.S.P.	3	82.00 82.00			266+47.60		40.99		
				1097	1	SPEC w/ 2" P.H. 1-SF11	SF11	41.00 41.00			265+65.60 2"PH 265+63.60		40.98		
				1096	1	STD SECT W.S.P.	3	41.00 41.00			265+24.60		40.98	0°00' 1.000078 1.000000	
				1095	1	SPEC BEVEL 3°29'	SF3	40.75 40.67			264+83.60	3°29' DL	40.98		
				1094	1	STD SECT W.S.P.	3	41.00 40.92			264+42.93		38.50	3°29' .002776 .998496	
											264+02.01	3°29' UP	36.00	0°00' 1.000000 1.000000	

CONTINUED FROM SL10

60'-4"(60.112')

Hdsc Hdp 48in (1219)

Hdsc Hdp 48in (1219)

Hdsc Hdp 48in (1219)

Ameron UTILITY PRODUCTS GROUP

RUSSIAN RIVER - CONTRACT #1

DRAWN BW 1-24-96

CHECKED

APPV'D.

LAYOUT DRAWING
STATION 264+02.01 TO STATION 269+47.57

SYMBOL	REVISION	DATE	BY	APPV'D.

2314 SL11.0

60-4-102.128.44

1000-1003 (7/75)

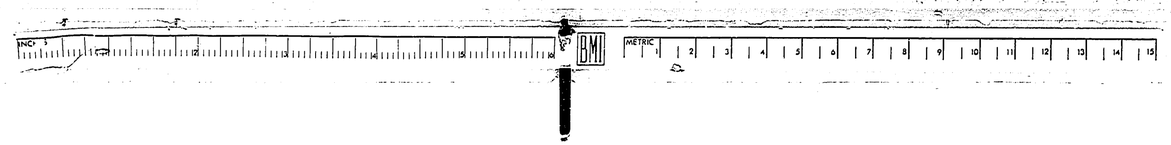

CONTINUED ON SL13

CONTRACT DRAWING REFERENCE	PIPE SIZE TYPE AND CLASS	(JOINT DETAIL) REFERENCE	BID ITEM	BILLING UNIT LENGTH	PIECE NO.	NO. REQ'D	DESCRIPTION	DETAIL DWG. REF.	SLOPE HORIZ.	SLOPE DIST.	PLAN LOOKING IN DIRECTION OF LAYING	INV. STATION—READ UP	PULL, BEVEL OR TURN	INV ELEVATION	SLOPE TANGENT COSINE	PROFILE NOTE: VIEW FROM RIGHT SIDE OF PIPE
					1162	5	STD 1158 1159 1160 1161 1162		5	205.00						
					1158					204.97						
			010		1157	4	STD 1154 1155 1156 1157		5	164.00						
					1154					163.98						
					1153	5	STD 1149 1150 1151 1152 1153		5	205.06						
					1149					205.03						
					1148	1	STD SECT		5	41.01						
										41.00						
					1147		1145 1146 1147			246.00						
					1142		1142 1143 1144			246.00						
						6	STD SECT		5							
				+.069	1144A	1	SDEC w/ 18" M.H.		SF32	41.00						
					1141		1-SF41 24-SF31 24-SF32		SF30	41.00						
					1140		1133 1134 1135 1136 1137 1138 1139 1140 1125 1126 1127 1128 1129 1130 1131 1132 1117 1118 1119 1120 1121 1122 1123 1124			954.00						
										954.00						
					1117	24	STD SECT		5							
					1116	1	SDEC w/ CCP BELL & WSD SDIGST		SF33	45.69						
										45.69						
					1115	2	STD SECT WSD		3	82.00						
					1114					82.00						
					1113	1	SDEC w/ 2"PL. 1-SF11		SF11	41.00						
										41.00						
					1112		1108 1109 1110 1111 1112			205.00						
										205.00						
					1108	5	STD SECT WSD		3							

CONTINUED FROM SL11

PLAN LOOKING IN DIRECTION OF LAYING	INV. STATION—READ UP	PULL, BEVEL OR TURN	INV ELEVATION	SLOPE TANGENT COSINE	PROFILE NOTE: VIEW FROM RIGHT SIDE OF PIPE
	292+02.24		56.00	0°57' .017076 .999854	
	289+97.27	5°07' up	52.5	0°52' .015246 .999884	
	287+33.29	5°07' dn	50.00	0°55' .017071 .999854	
	286+28.26	0°59' up	48.50		
	285+37.26		46.66		
18" MH.	283+41.26		46.40		
	283+00.26		46.33		
	282+16.26		46.05		
	281+75.57		46.04		
2" PL.	281+93.57		46.01		
	281+51.57				
	281+50.57		46.00		
	279+67.57	14°2' DN	45.98	0°01' .000349 1.000000	
				180°1' 1.000085 .999549	

Ameron UTILITY PRODUCTS GROUP

Russian River - Contract #1

LAYOUT DRAWING
STATION 279+67.57 TO STATION 292+02.24

SYMBOL	REVISION	DATE	BY	APPV'D.
1	Revised Sta. from 296+02.24 to 292+02.24	11-4-76	RS	

DRAWN	DW	1-26-76	
CHECKED			
APPV'D.			

2814

SL12.1

60-4-102.128.45

1000-1003 (7/75)

CONTINUED ON SL14

CONTRACT DRAWING REFERENCE	PIPE SIZE, TYPE, AND CLASS (JOINT DETAIL) REFERENCE	BID ITEM / BILLING	UNIT LENGTH / BILLING	PIECE NO.	NO. REQ'D	DESCRIPTION	DETAIL DWG. REF.	SLOPE HORIZ.	SLOPE DIST.	PLAN LOOKING IN DIRECTION OF LAYING	INV. STATION—READ UP	PULL, BEVEL OR TURN	ELEVATION	SLOPE TANGENT COSINE	PROFILE NOTE: VIEW FROM RIGHT SIDE OF PIPE
	60-4-102.118	021		1190	1	STD SECT W/SD	E		41.00 / 41.00		298+19.58		62.70		
	42 SC 106 HA (CON)					STD SECTION W/SD			5.54 / 5.54		302+78.54		65.39		
		010		1189	1		E		82.46 / 82.46		302+50.00		62.20		
				1188A / 1188	1	SDE2 W/ 18" M.H. 1-533 16-515 16-531	FC / ECH		41.00 / 41.00	18" M.H.	302+87.54 / 302+60		61.98		
			+0.029	1187A	1	SDE2 W/ FLG'D END & 2" O.L.	ECH		7.41 / 7.41		301+96.54		61.47		
			+0.021			3" BUTTERFLY VALVE BY OTHERS			1.25 / 1.25	2" O.L.	301+80.13 / 301+89.13		61.60		
				1187	1	SDE2 W/ FLG'D END & 2" O.L.	SFSBA		1.50 / 1.50	2" O.L.	301+87.89 / 301+57.13		61.88		
				1186A / 1186	1	SDE W/ 24" T.O. & 18" M.H. 1-533 16-515 16-531	SFSB		41.00 / 41.00	24" T.O. 18" M.H.	301+86.52 / 301+50 / 301+45.52		61.37 / 60.46		
				1185		1112 1113 1114 1115			164.00 / 163.99						
				1182	1	STD SECT W/SD	E				299+31.52		59.82	0° 34' .009990 .999950	
				1181 / 1180	2	STD SECT W/ UNCP	3		82.03 / 82.03		299+99.49	0° 22' UP	59.50		
				1179	1	SDE1 W/ UNCP SDE1 CC P SPIGOT	SFSJ		41.25 / 41.25		299+58.24		59.33		
				1178		1174 1175 1176 1177 1178 1164 1165 1170 1171 1172 1173 1163 1166 1169 1167 1168			656.00 / 656.00						
				1163	1	STD SECT	S				292+02.24	0° 47' UP	56.00	0° 12' .003556 .999994	

CONTINUED FROM SL12

CONTRACT #1

CONTRACT #2 OK

Ameron UTILITY PRODUCTS GROUP

RUSSIAN RIVER - CONTRACT # 1 & 2

LAYOUT DRAWING
STATION 284+01.24 TO STATION 302+19.58

292+02.24

SYMBOL	REVISION	DATE	BY	APPV'D.
1	Force Valve Revision	4/81	RS	

DRAWN LW 1-21-79
CHECKED
APPV'D.

5814 SL13.1

60-4-102.128.46

1000-1003 (7/75)

5U4

OK

CONTINUED ON 6L1

CONTRACT DRAWING REFERENCE	PIPE SIZE TYPE AND CLASS (JOINT DETAIL REFERENCE)	BID ITEM	UNIT LENGTH	PIECE NO.	NO. REQ'D	DESCRIPTION	DETAIL DWG. REF.	SLOPE HORIZ.	DIST.	PLAN LOOKING IN DIRECTION OF LAYING	INV. STATION—READ UP	PULL, BEVEL OR TURN	INV. ELEVATION	SLOPE TANGENT COSINE	PROFILE NOTE: VIEW FROM RIGHT SIDE OF PIPE
				1211		1202 1203 1204 1205 1206 1207 1208 1209 1210 1211		410.00 409.00			311+80.21		67.88		
				1202	10	STD	5							0°24' .007024 .999975	
				1201		1196 1197 1198 1199 1200 1201		246.00 246.00			307+70.22	Pull 0°06 up	65.00		
		031		1196	6	Std SEC	5				305+24.22		63.74		
				1195	1	SPEC w/ CP BELL WSP SPIGOT	5F40	40.69 40.69			304+88.53		63.54		
				1194	1	STD SECT WSP	3	41.00 41.00			304+42.53		63.33		
				1193 1192	2	STD SECT WSP	3	82.00 82.00			303+60.53		62.41		
				1191	1	SPEC w/ 2" DN. 1-(S2)	5F11	41.00 41.00			303+58.53 303+19.53	0°16 DN	62.70	0°18' .005103 .999957 0°34' .009990 .999950	

60-4-102.113

48 SC 640 (400)

CONTINUED FROM 5L13

Ameron UTILITY PRODUCTS GROUP

RUSSIAN RIVER - CONTRACT #2

LAYOUT DRAWING

STATION 303+19.53 TO STATION 311+80.21

SYMBOL	REVISION	DATE	BY	APPV'D.
△	General Revision	[illegible]	[illegible]	

DRAWN	KW	1-24-76
CHECKED		
APPV'D.		

2314 5L14.1

60-4-102.128.47

1000-1003 (7/75)

SU5

* CONTRACTOR TO SUPPLY DIMENSIONS

FLAG	ITEM NO.	QUANTITY THIS DWG.	DESCRIPTION	MATERIAL SPECIFICATION

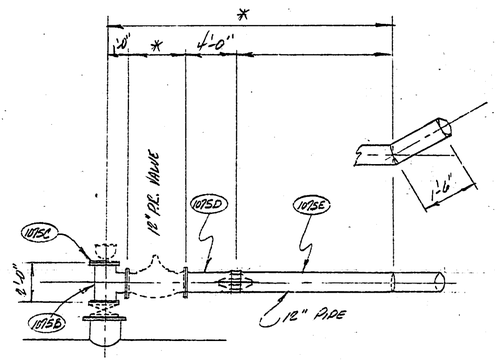

Pl. No. 1075
SEE SHT SU10

PRESSURE RELIEF VALVE
INSTALLATION

JOINTING DWG. REF WA-6
LINE 030

Pl. No.	DETAIL SHEET
1075B	SF28
1075C	SF29
1075D	SF28
1075E	SF30

SHIP LOOSE ITEMS
1- (28) 18" GASKET
16- (29) 1⅛" BOLTS - CAD
16- (31) 1⅛" NUTS - CAD
1- (27) 12" FC
2- (30) ¾" STUDS - CAD
4- (32) ¾" NUTS - CAD

CHANGE ORDERS	SYMBOL	REVISION	DATE	BY	APPV'D.

UNLESS OTHERWISE SPECIFIED DIMENSIONS ARE IN INCHES
TOLERANCES

FRACT.	.X	.XX	.XXX	ANGLE
±	±	±	±	±

DWG. SCALE

Ameron PIPE PRODUCTS GROUP

RUSSIAN RIVER - CONTRACT #1

DRAWN	LW	2-3-76
CHECKED		
APPV'D.		

2314 SU150

60-4-102.128.48

1000-1000 (8/70)

FLAG	ITEM NO	QUANTITY THIS DWG	DESCRIPTION	MATERIAL SPECIFICATION
	239	106'11.37"	49.875" O.D. x 1/4" PL CYL	

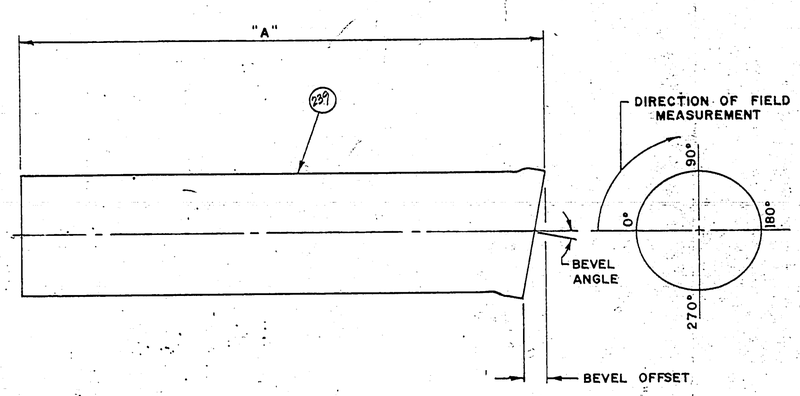

P.C. NO.	CUT SECT.	CLASS	"A"	BEVEL ANGLE	BEVEL OFFSET	F.T. LOCATION ANGULAR	F.T. LOCATION CIRCUM.	REF. SHT.
375	—	480	41'-2"	5°00'	4.36"	270°	—	2F17
378	—	480	41'-2"	2°51'	2.48"	90°	—	—
379	21	480	24'-7.37"	3°16'	2.85"	90°	—	—

Pipe Specials

CHANGE ORDERS	SYMBOL	REVISION	DATE	BY	APPV'D

UNLESS OTHERWISE SPECIFIED DIMENSIONS ARE IN INCHES

TOLERANCES

FRACT	X	.XX	XXX	ANGLE
±	±	±	±	±

DWG. SCALE

Ameron PIPE PRODUCTS GROUP

RUSSIAN RIVER - CONTRACT #1

DRAWN CLL 12/15/75

CHECKED

APPV'D

2265

2F1.0

60-4-102.128.49

FLAG	ITEM NO.	QUANTITY THIS DWG	DESCRIPTION	MATERIAL OR SPECIFICATION
	237	40'-2	31.875"OD X 8g à Cyl	

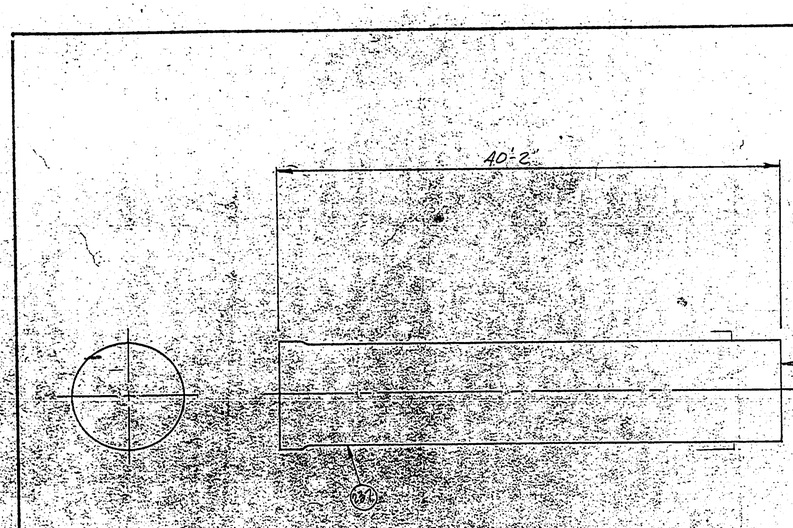

CLASS 500
CMC .75
CML .75

300
221

CHANGE ORDERS	SYMBOL	REVISION	DATE	BY	APPV'D

UNLESS OTHERWIGE SPECIFIED DIMENSIONS ARE IN INCHES

TOLERANCES				
FRACT.	.X	.XX	.XXX	ANGLE
±	±	±	±	±

DWG. SCALE

Ameron PIPE PRODUCTS GROUP

RUSSIAN RIVER - CONTRACT #1

DRAWN	eb	12/1/71
CHECKED		
APPV'D		

2265 2F2.0

60-4-102.128.50

FLAG	ITEM NO.	QUANTITY THIS DWG.	DESCRIPTION	MATERIAL SPECIFICATION
	237	40-2"	31.875" OD x 8ga Cyl	

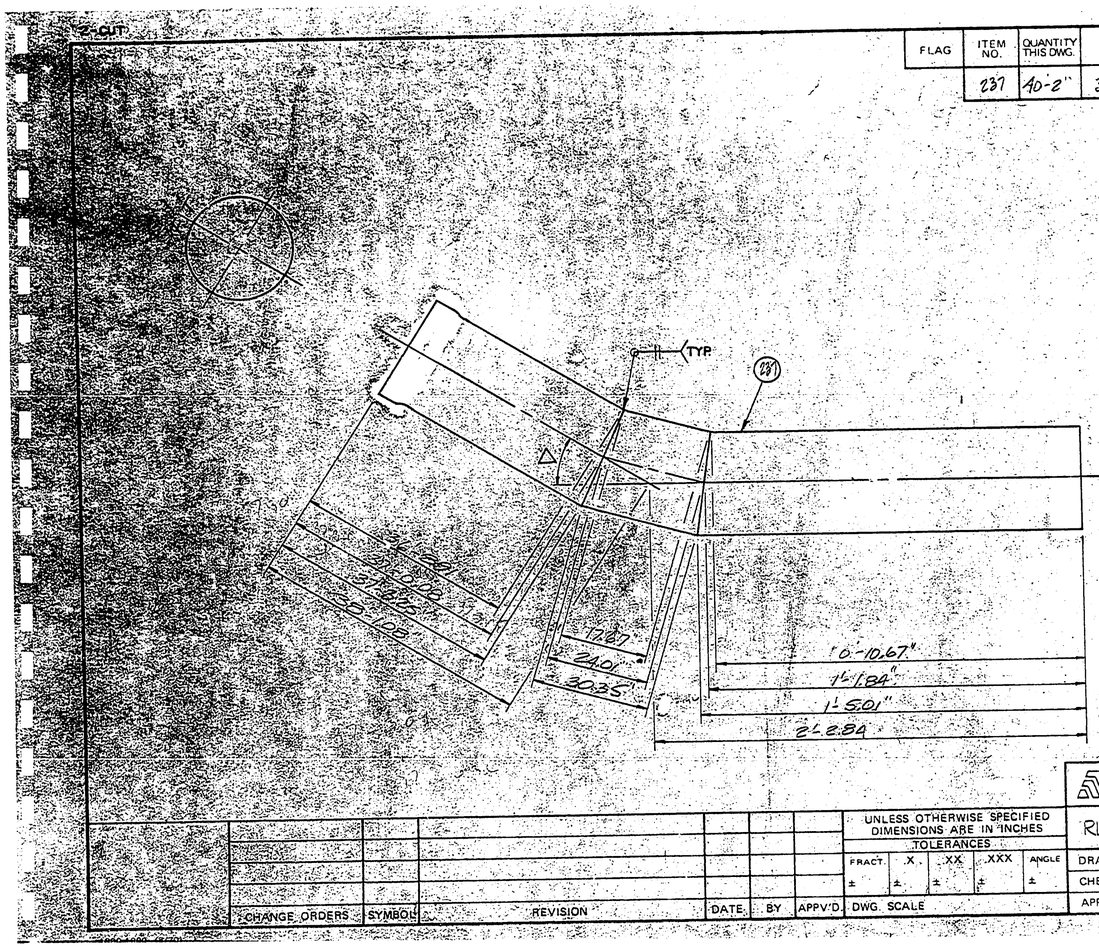

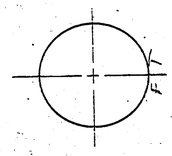

△	45°00'V	CLASS	500
CUT ⊥	11° 15'	CMC	.75
R	60.36	CML	.75
		CHORD	39'-8.44"

302 / 211

CHANGE ORDERS	SYMBOL	REVISION	DATE	BY	APPV'D

UNLESS OTHERWISE SPECIFIED DIMENSIONS ARE IN INCHES

TOLERANCES

FRACT.	.X	.XX	.XXX	ANGLE
±	±	±	±	±

DWG. SCALE

Ameron PIPE PRODUCTS GROUP

RUSSIAN RIVER - CONTRACT #1

DRAWN	RBJ	12/11/75
CHECKED		
APPV'D.		

2265 2F3.0

60-4-102.128.51

FLAG	ITEM NO.	QUANTITY THIS DWG	DESCRIPTION	MATERIAL SPECIFICATION
	237	40'	31.875"OD x .894 Cyl	

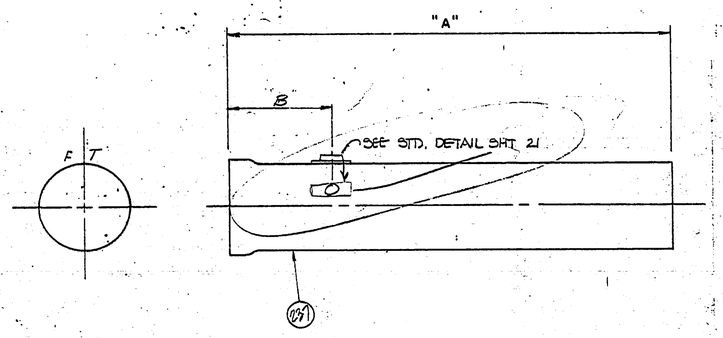

PC. NO.	CUT SECT.	CLASS	"A"	B		REF. L.O. SHT.
307		500	40'-2"	2'		211
315		"	"	2'		211

CHANGE ORDERS	SYMBOL	REVISION	DATE	BY	APPV'D.

UNLESS OTHERWISE SPECIFIED DIMENSIONS ARE IN INCHES
TOLERANCES
FRACT. ± | X ± | .XX ± | .XXX ± | ANGLE ±
DWG. SCALE

Ameron PIPE PRODUCTS GROUP

RUSSIAN RIVER - CONTRACT #1

DRAWN RPB 12/10/71
CHECKED
APP'D.

2265

60-4-102.128.52

I-CUT

FLAG	ITEM NO.	QUANTITY THIS DWG.	DESCRIPTION	MATERIAL SPECIFICATION
	237	40'-2"	31 7/8" OD x 8ga Cyl	

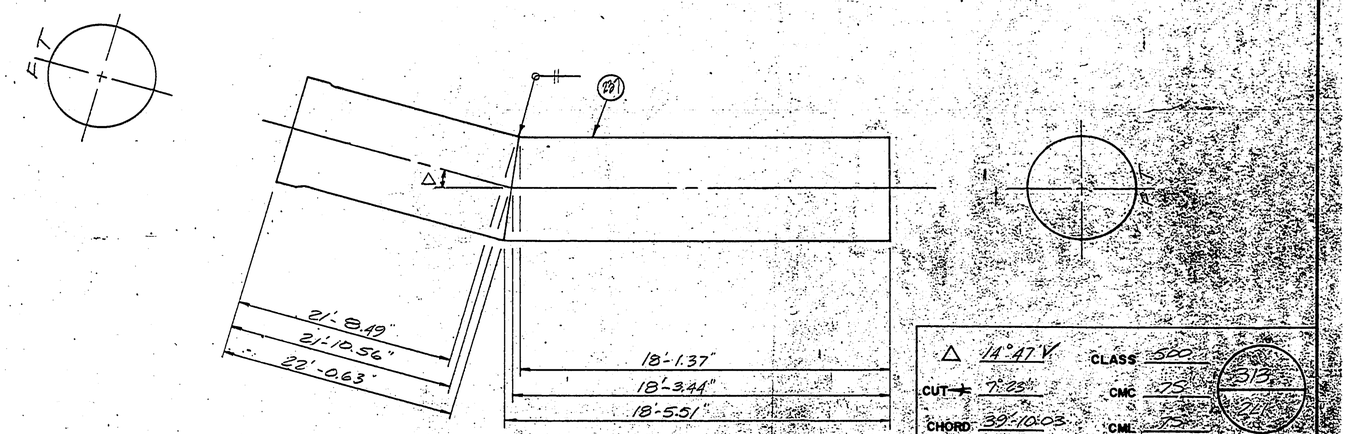

△ 14°47'V CLASS 500
CUT 7°23' CMC .75
CHORD 39'-10.03 CML .75

313
24

Ameron PIPE PRODUCTS GROUP

RUSSIAN RIVER - CONTRACT #1

CHANGE ORDERS	SYMBOL	REVISION	DATE	BY	APPV'D

UNLESS OTHERWISE SPECIFIED DIMENSIONS ARE IN INCHES

TOLERANCES

FRACT.	X	XX	XXX	ANGLE
±	±	±	±	±

DWG. SCALE

DRAWN	RB	12/11/75
CHECKED		
APPV'D		

2265 2F5.0

60-4-102.128.53

1000 1000 (8/70)

1-CUT TAB.

FLAG	ITEM NO.	QUANTITY THIS DWG.	DESCRIPTION	MATERIAL SPECIFICATION
	238	120'	43.875"OD x 5/16" R Cyl	

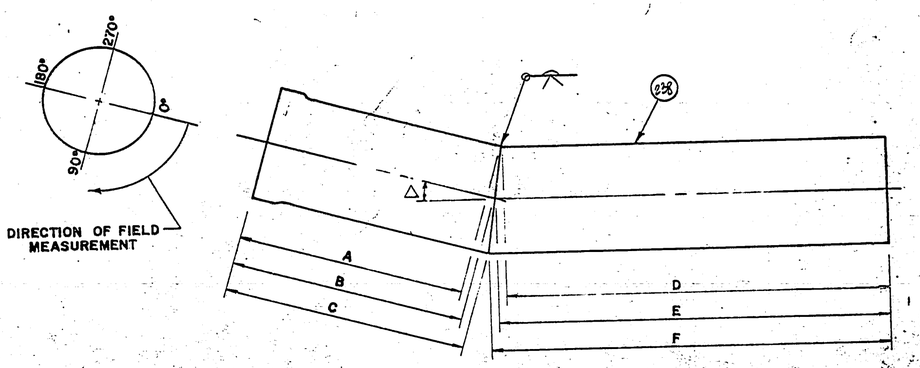

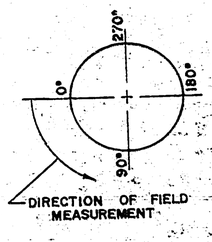

PC. NO.	CUT SECT.	CLASS	CMC	CML	△	CUT ⊣	A	B	C	D	E	F	CHORD	F.T. LOCATION SPIGOT END ANGULAR	SPIGOT END CIRCUM.	O.D. CYLINDER BELL END ANGULAR	BELL END CIRCUM.
324		500	.75	.625	13°31'↓	6°45'	33'-7.0"	33'-9.60"	34'-0.20"	6'-1.80"	6'-4.40"	6'-7.00"	40'-0.22"	180°	—	180°	—
334		500	.75	.625	23°50'↓	11°55'	15'-11.69"	16'-4.32"	16'-8.95"	23'-5.05"	23'-9.68"	24'-2.31"	39'-3.97"	180°	—	180°	—
346		500	.75	.625	24°12'↓	12°06'	34'-2.86"	34'-7.56"	35'-0.26"	5'-1.74"	5'-6.44"	5'-11.14"	39'-3.94"	180°	—	180°	—

CHANGE ORDERS	SYMBOL	REVISION	DATE	BY	APPV'D

UNLESS OTHERWISE SPECIFIED DIMENSIONS ARE IN INCHES
TOLERANCES
FRACT. ± | .X ± | .XX ± | .XXX ± | ANGLE ±
DWG. SCALE

Amerón PIPE PRODUCTS GROUP

RUSSIAN RIVER - CONTRACT #1

DRAWN	PB	12/11/73
CHECKED		
APPV'D.		

2265 — 1 — 12F6.0

60-4-102.128.54

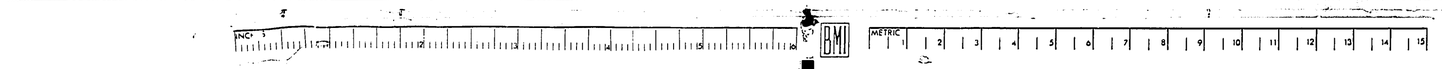

FLAG	ITEM NO.	QUANTITY THIS DWG	DESCRIPTION	MATERIAL SPECIFICATION
	238	120'	A3.875" OD X 5/16 PL Cyl.	

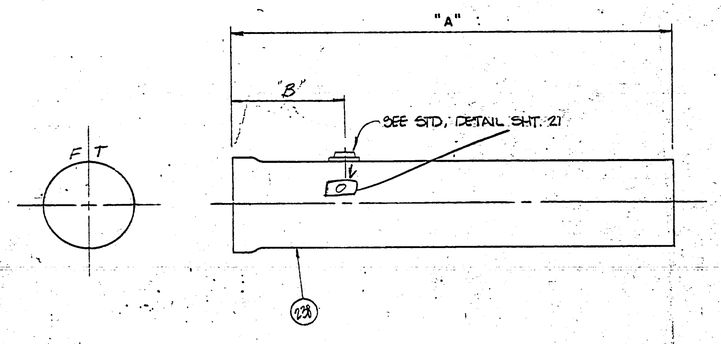

PC. NO.	CUT SECT.	CLASS	"A"	"B"		REF. L.O. SHT.
330	—	500	40'-2	2'		2L2
338	—	"	"	2'		2L3
345	—	500	"	"		2L3

CHANGE ORDERS	SYMBOL	REVISION	DATE	BY	APPV'D

UNLESS OTHERWISE SPECIFIED DIMENSIONS ARE IN INCHES
TOLERANCES
FRACT. X XX XXX ANGLE
DWG. SCALE

Ameron PIPE PRODUCTS GROUP

RUSSIAN RIVER - CONTRACT #1

DRAWN RB 12/11/75
CHECKED
APPV'D
2265

60-4-102.128.55

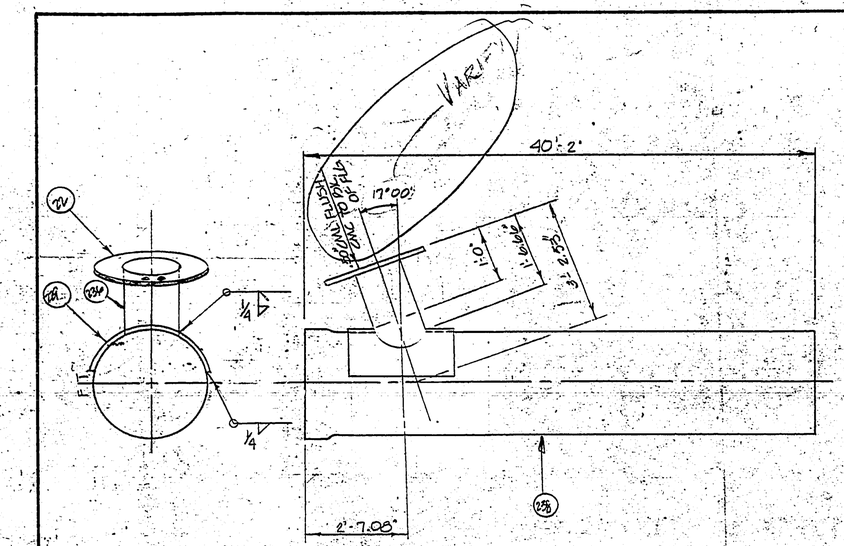

FLAG	ITEM NO.	QUANTITY THIS DWG	DESCRIPTION	MATERIAL SPECIFICATION
	238	40'-2"	43.875" O.D. x 5/16" R CYL.	
	22	1	20" CL. "D" PLATE FLG. SEE SH 282	
	229	1	45" SQ x 5/16" R COLLAR ROLLED TO A 21.94" RADIUS	
	236	2' ±	21.78" O.D. x 3/16" R CYL.	

BEEF UP 1/4" OR SO/
SID TO RON ON PHONE

CLASS 500
CMC .75
CML .63

Ameron PIPE PRODUCTS GROUP

RUSSIAN RIVER CONTRACT #1

UNLESS OTHERWISE SPECIFIED DIMENSIONS ARE IN INCHES
TOLERANCES
FRACT ± X ± XX ± XXX ± ANGLE ±

DRAWN CLL 12/11/75
CHECKED
APPV'D
DWG. SCALE

CHANGE ORDERS	SYMBOL	REVISION	DATE	BY	APPV'D

2265

60-4-102.128.56

1000-1000 (8/70)

5-cut

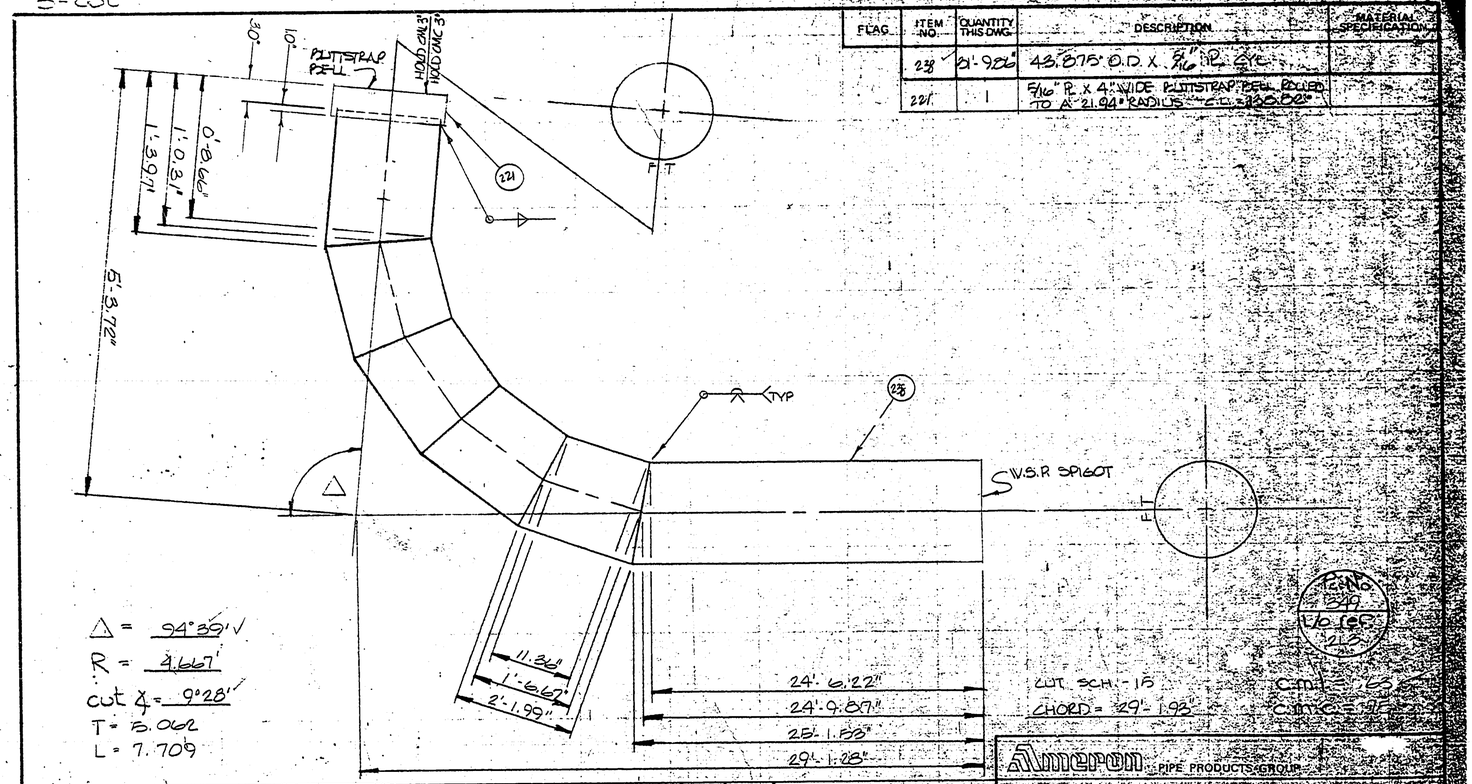

FLAG	ITEM NO.	QUANTITY THIS DWG.	DESCRIPTION	MATERIAL SPECIFICATION
	238	31'-9.86"	43.875" O.D. X 5/16" PL CYL	
	221	1	5/16" PL X 4" WIDE PLUTSTRAP BELL ROLLED TO A 21.94" RADIUS C.L. = 138.82"	

Ameron PIPE PRODUCTS GROUP

RUSSIAN RIVER CONTRACT #1

UNLESS OTHERWISE SPECIFIED DIMENSIONS ARE IN INCHES

TOLERANCES

FRACT.	X	XX	XX	ANGLE
±	±	±	±	±

DRAWN CLL 12/12/78

CHECKED

APPV'D

CHANGE ORDERS	SYMBOL	REVISION	DATE	BY	APPV'D

DWG. SCALE

1000-1000 (8/70)

60-4-102.128.57

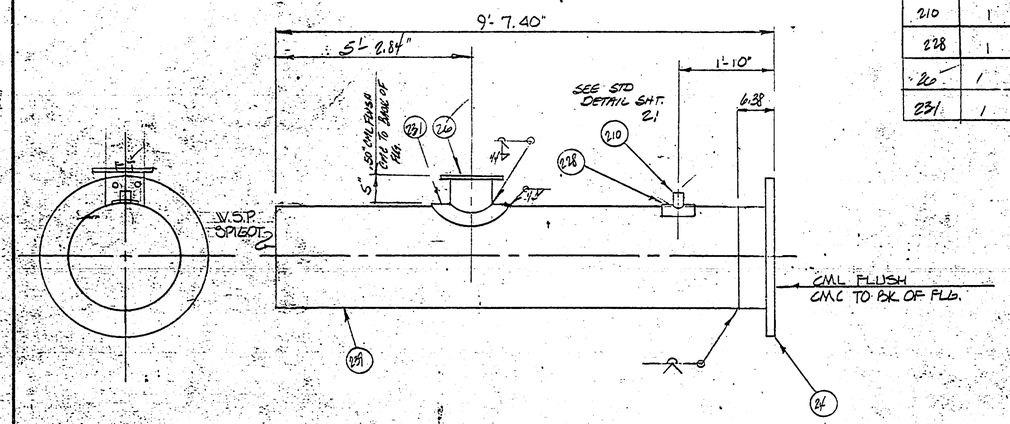

FLAG	ITEM NO	QUANTITY THIS DWG	DESCRIPTION	MATERIAL SPECIFICATION
	239	9'-1.02"	49.875" O.D. X 1/4" PL CYL	
	24	1	48" X 6.38 O.A.L. CL "D" SKIRTED FLG SEE SHT. 2B3	
	210	1	2" X 3000# THREDOLET ON A 49.88" RUN	
	228	1	6" SQ. X 3/16" PL COLLAR ROLLED TO A 24.94" RADIUS	ASTM A 283 GR. C
	26	1	18" SPEC SKIRTED FLG SEE SHT. 2B3	
	231	1	38.25" O.D. X 3/8" PL COLLAR ROLL TO 24.94" R	

CLASS 480
CMC .75
CML .75
CUT SCH 13

352
2L4

Ameron PIPE PRODUCTS GROUP

RUSSIAN RIVER CONTRACT #1

CHANGE ORDERS	SYMBOL	REVISION	DATE	BY	APPV'D
	1	ADDED M.H.	2-2-76	KW	

UNLESS OTHERWISE SPECIFIED DIMENSIONS ARE IN INCHES

TOLERANCES

FRACT	.X	.XX	.XXX	ANGLE
±	±	±	±	±

DWG. SCALE

DRAWN	CLL	12/12/75
CHECKED		
APPV'D		

~~2765~~ 2314 2F10J

60-4-102.128.58

1000 1000 (R 70)

FLAG	ITEM NO	QUANTITY THIS DWG.	DESCRIPTION	MATERIAL SPECIFICATION
	239	6'-5.49	49.875" O.D. x 1/4" PL CYL.	
	24	1	48" x 6.38 ' O.A.L. CL "D" SKIRTED FLG. SEE SHT. 283	
	210	1	2" x 3000# THREDOLET ON A 49.88" RUN	
	228	1	6" SQ x 3/16" PL COLLAR ROLLED TO A 24.94" RADIUS	ASTM A283 GR. C

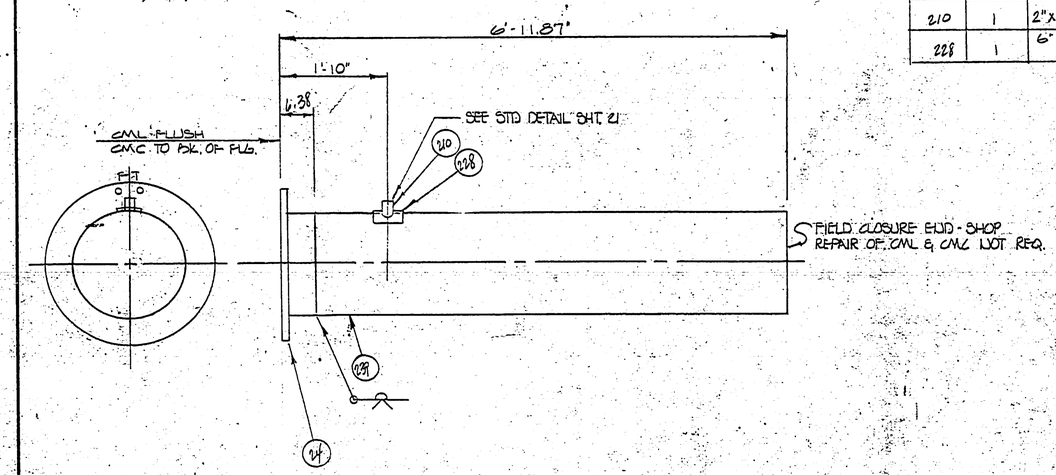

CLASS 480
CMC .75
CML .75
LOT SCH. 13

Ameron PIPE PRODUCTS GROUP

RUSSIAN RIVER - CONTRACT #1

UNLESS OTHERWISE SPECIFIED DIMENSIONS ARE IN INCHES

TOLERANCES

FRACT	X	XX	XXX	ANGLE
±	±	±	±	±

DWG. SCALE

DRAWN	CLL	12/12/75
CHECKED		
APPV'D		

2265

2F11.0

60-4-102.128.59

CHANGE ORDERS	SYMBOL	REVISION	DATE	BY	APPV'D

1000-1000 (8.70)

1-CUT

FLAG	ITEM NO.	QUANTITY THIS DWG	DESCRIPTION	MATERIAL SPECIFICATION
	240	40'-2"	49.875" O.D. x 3/8" R. CYL.	"
	269	1	18" x 12.50" O.A.L. SKIRTED FLANGE SEE SHT. 283	"
	231	1	38.25" O.D. x 3/8" R COLLAR - ROLLED TO A 24.94" RADIUS	"

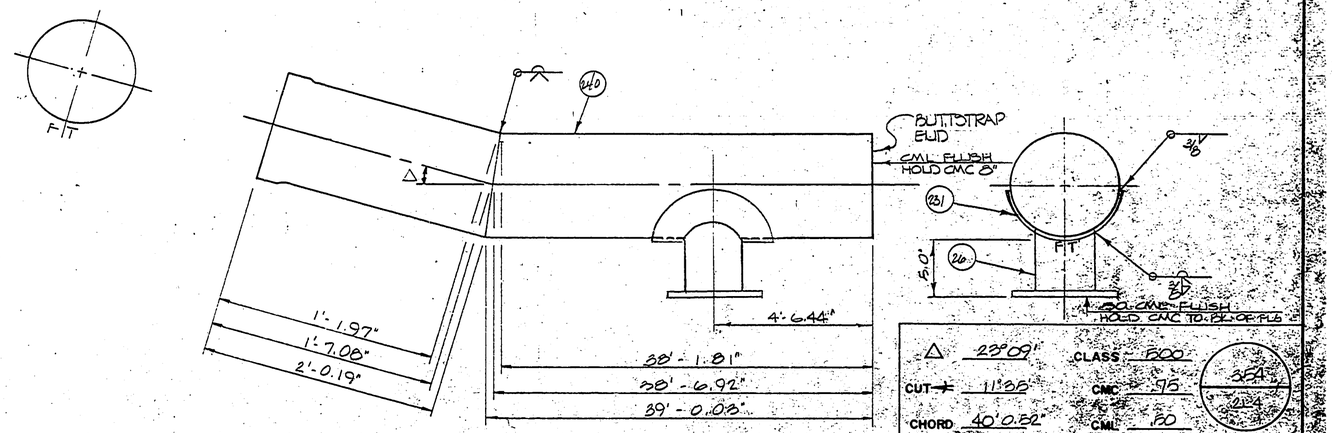

CHANGE ORDERS	SYMBOL	REVISION	DATE	BY	APPV'D.

UNLESS OTHERWISE SPECIFIED DIMENSIONS ARE IN INCHES
TOLERANCES:
FRACT. ± | .X ± | .XX ± | .XXX ± | ANGLE ±

DWG. SCALE

Ameron PIPE PRODUCTS GROUP

RUSSIAN RIVER CONTRACT #1

DRAWN CLL 12/12/73
CHECKED
APPV'D.

2265

2F12.9

60-4-102.128.60

I-CUT

FLAG	ITEM NO	QUANTITY THIS DWG	DESCRIPTION	MATERIAL SPECIFICATION
	240	40'-2"	49.875 O.D. X 5/8" R. CYL.	

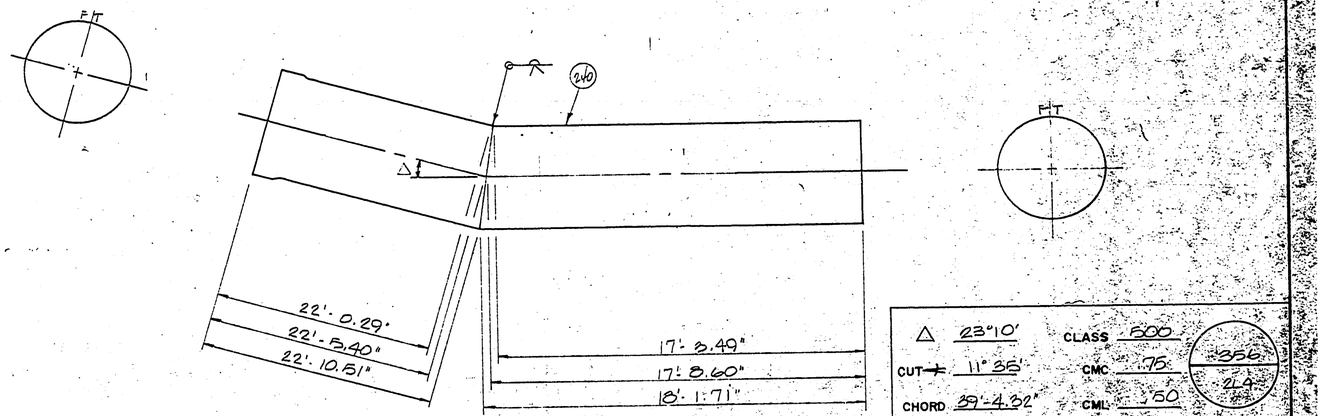

△ 23°10'
CUT 11°35'
CHORD 39'-4.32"

CLASS 500
CMC .75
CML .50

356
214

CHANGE ORDERS	SYMBOL	REVISION	DATE	BY	APPV'D

UNLESS OTHERWISE SPECIFIED DIMENSIONS ARE IN INCHES
TOLERANCES
FRACT ± | X ± | .XX ± | .XXX ± | ANGLE ±

DWG. SCALE

Ameron PIPE PRODUCTS GROUP

RUSSIAN RIVER - CONTRACT #1

DRAWN ELL 12/12/75
CHECKED
APPV'D

2265

60-4-102.128.61

2-CUT

FLAG	ITEM NO.	QUANTITY THIS DWG.	DESCRIPTION	MATERIAL SPECIFICATION
	240	22'-1.97"	49.875" OD X 3/8 Fe Cyl.	

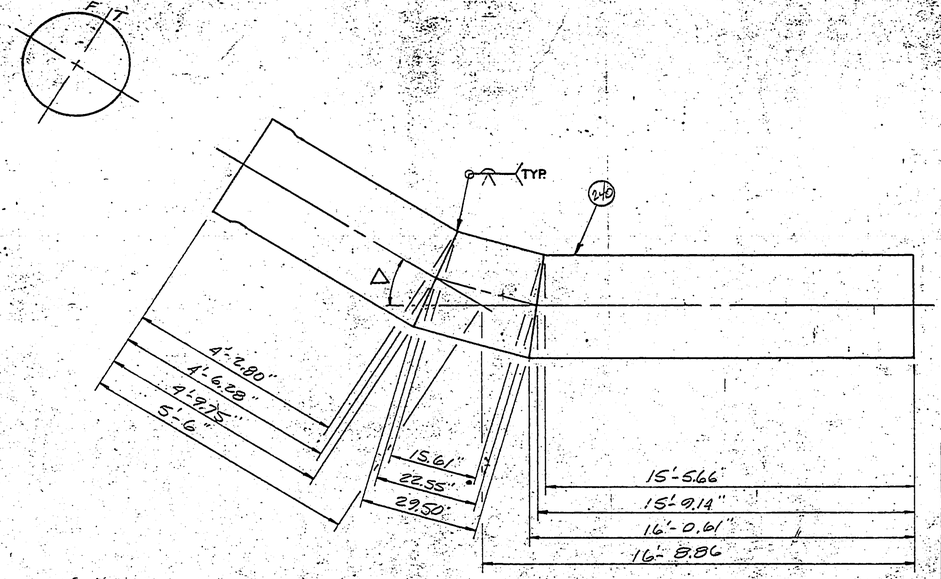

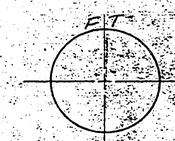

△	31°43'	CLASS	500
CUT ∠	7°55'	CMC	.75
R	80.97	CML	.50
		CHORD	21'-7.34

360
225

Ameron PIPE PRODUCTS GROUP

RUSSIAN RIVER CONTRACT #1

CHANGE ORDERS	SYMBOL	REVISION	DATE	BY	APPV'D

UNLESS OTHERWISE SPECIFIED DIMENSIONS ARE IN INCHES

TOLERANCES

FRACT.	X	XX	XXX	ANGLE
±	±	±	±	±

DWG. SCALE

DRAWN	RB	12/11/75
CHECKED		
APPV'D		

2265

2F14.0

60-4-102.128.62

1000 1000 (8/70)

2-CUT

FLAG	ITEM NO	QUANTITY THIS DWG.	DESCRIPTION	MATERIAL SPECIFICATION
	240	25'-2"	49.875" O.D. x 3/8" R. CYL.	
	210	1	2" x 3000# THREDOLET ON A 49.85" RUN	
	228	1	6 x 90 x 3/16" R COLLAR ROLLED TO A 24.94" RADIUS	ASTM A 283 GR. C

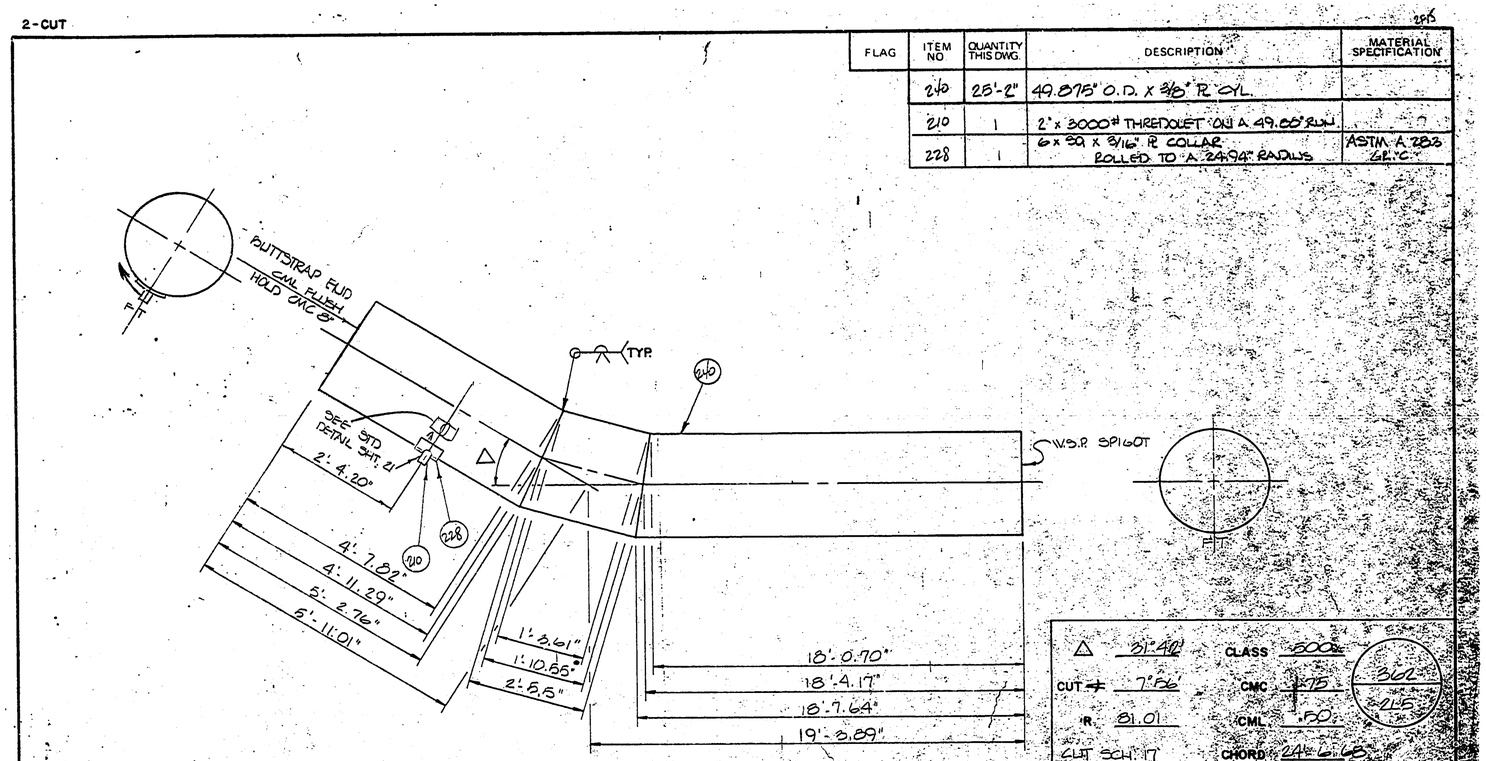

△	31°40'
CUT =	7.86
R.	81.01
CUT SCH.	17
CLASS	600#
CMC	.375
CML	.80
CHORD	24'-6.68"

CHANGE ORDERS	SYMBOL	REVISION	DATE	BY	APPV'D

UNLESS OTHERWISE SPECIFIED DIMENSIONS ARE IN INCHES
TOLERANCES
FRACT. ± | .X ± | .XX ± | .XXX ± | ANGLE ±

DWG. SCALE: 1" = 1'-0"

Ameron PIPE PRODUCTS GROUP

RUSSIAN RIVER CONTRACT #1

DRAWN	CL	12/12/78
CHECKED		
APPV'D		2265

60-4-102.128.63

1000 1000 (8 70)

BMI

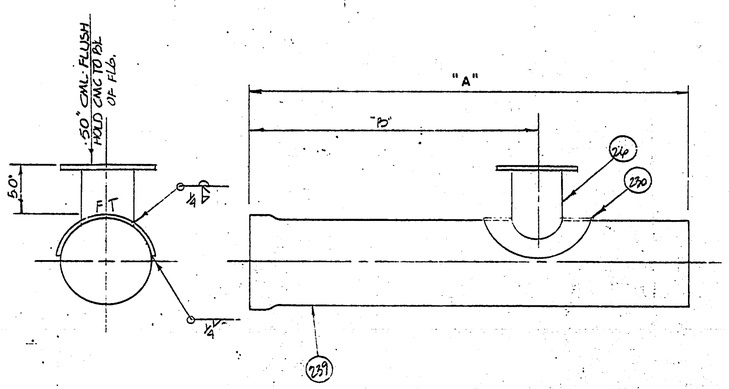

FLAG	ITEM NO	QUANTITY THIS DWG	DESCRIPTION	MATERIAL SPECIFICATION
	239	82'-4"	49.875 O.D. x 1/4" R CYL.	
	26	2	18" x 12.50" O.A.L. SKIRTED FLANGE SEE SHT. 282	
	230	2	38.25" O.D. x 3/8 R COLLAR - ROLLED TO A 24.94" RADIUS	ASTM A 285 GR. C

PC. NO.	CUT SECT.	CLASS	"A"	"B"		REF. SHT.
368	—	480	41'-2"	32'-4.14"		285
380	—	480	41'-2"	4'-8.40"		286

CHANGE ORDERS	SYMBOL	REVISION	DATE	BY	APPV'D

UNLESS OTHERWISE SPECIFIED DIMENSIONS ARE IN INCHES TOLERANCES FRACT ± XX ± XXX ± ANGLE ±

DWG SCALE

AMERON PIPE PRODUCTS

RUSSIAN RIVER CONTRACT #1

DRAWN CLL 12/15/65

CHECKED

APPV'D

2265

60-4-102.128.64

1000 1000 M 701

2F17

FLAG	ITEM NO.	QUANTITY THIS DWG	DESCRIPTION	MATERIAL SPECIFICATION
	239	41'-2"	49.875" O.D. x 1/4" PL CYL.	
	210	1	2" x 3000# THREDOLET ON A 49.88" RUN	
	228	1	6" SQ x 3/16" PL COLLAR ROLLED TO A 24.94" RADIUS	

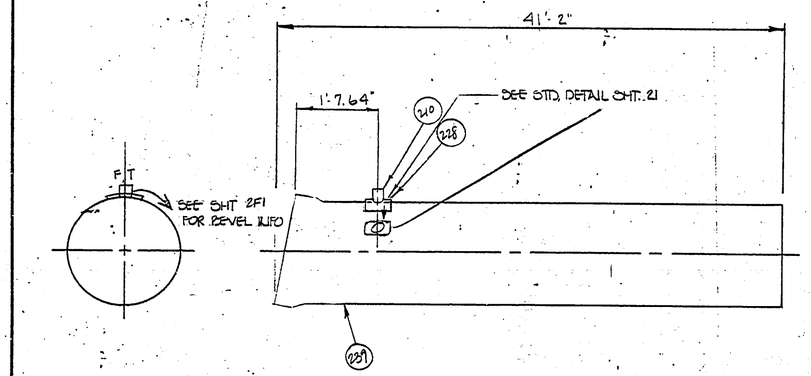

CLASS 480
CMC 75
CML 75
375
215

Ameron PIPE PRODUCTS GROUP

RUSSIAN RIVER - CONTRACT #1

DRAWN	CLL	12/15/75			
CHECKED					
APPV'D.			2265		2F17.0

UNLESS OTHERWISE SPECIFIED DIMENSIONS ARE IN INCHES

TOLERANCES

FRACT.	.X	XX	.XXX	ANGLE
±	±	±	±	±

DWG. SCALE

CHANGE ORDERS	SYMBOL	REVISION	DATE	BY	APPV'D.

1000 1000 (8/70)

60-4-102.128.65

2F16

FLAG	ITEM NO	QUANTITY THIS DWG	DESCRIPTION	MATERIAL SPECIFICATION
	239	123'-6"	49.875" O.D x 1/4" PL CYL.	
	210	3	2" x 3000# THREDOLET ON A 49.88" RUN	
	228	3	6" SQ. x 3/16" PL COLLAR ROLLED TO A 24.94" RADIUS	ASTM A283 GR. C

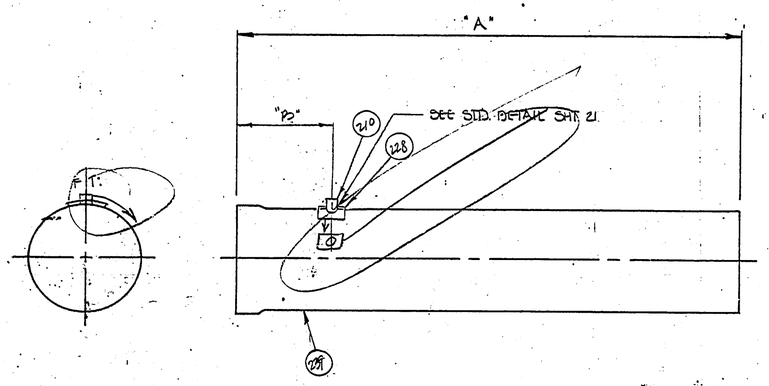

PC NO.	CLASS	"A"	"B"	REF. SHT.
383	480	41'-2"	2'-0"	2L6
403	480	41'-2"	2'-0"	2L7
411	480	41'-2"	2'-0"	2L7

CML .75
CMC .75

Ameron PIPE PRODUCTS GROUP

RUSSIAN RIVER CONTRACT #1

CHANGE ORDERS	SYMBOL	REVISION	DATE	BY	APPV'D

UNLESS OTHERWISE SPECIFIED DIMENSIONS ARE IN INCHES

TOLERANCES

FRACT	.X	.XX	.XXX	ANGLE
±	±	±	±	±

DWG. SCALE

DRAWN CLL 12/15/75
CHECKED
APPV'D.

2265

2F18.0

60-4-102.128.66

1000 1000 (8-70)

FLAG	ITEM NO	QUANTITY THIS DWG.	DESCRIPTION	MATERIAL SPECIFICATION
	239	54'-7.72"	49.875" O.D. x 1/4" PL CYL.	

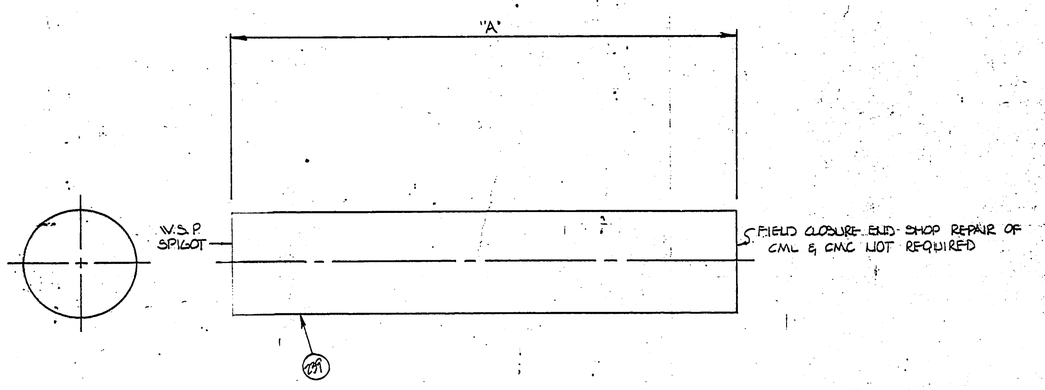

PC. NO.	CLASS	CUT. SCH.	"A"	REF. SHT.	
388	480	18"	29'-5.72"	2L6	CMC .75
412	480	11"	25'-2"	2L7	CML .75

Ameron PIPE PRODUCTS GROUP

RUSSIAN RIVER - CONTRACT #1

CHANGE ORDERS	SYMBOL	REVISION	DATE	BY	APPV'D

UNLESS OTHERWISE SPECIFIED DIMENSIONS ARE IN INCHES

TOLERANCES

FRACT.	.X	.XX	.XXX	ANGLE
±	±	±	±	±

DWG. SCALE

DRAWN	CLL	12/15/75
CHECKED		
APPV'D.		

2265

2FM10

60-4-102.128.67

1000 1000 '8 701

2-CUT

FLAG	ITEM NO.	QUANTITY THIS DWG.	DESCRIPTION	MATERIAL SPECIFICATION
	240	40'-2"	49.875" O.D. x 3/8" PL CYL.	
	26	1	18" x 12.50" O.A.L. SKIRTED FLG. SEE SHT. 283	
	231	1	38.25" O.D. x 3/8" PL COLLAR ROLLED TO A 24.94" RADIUS	

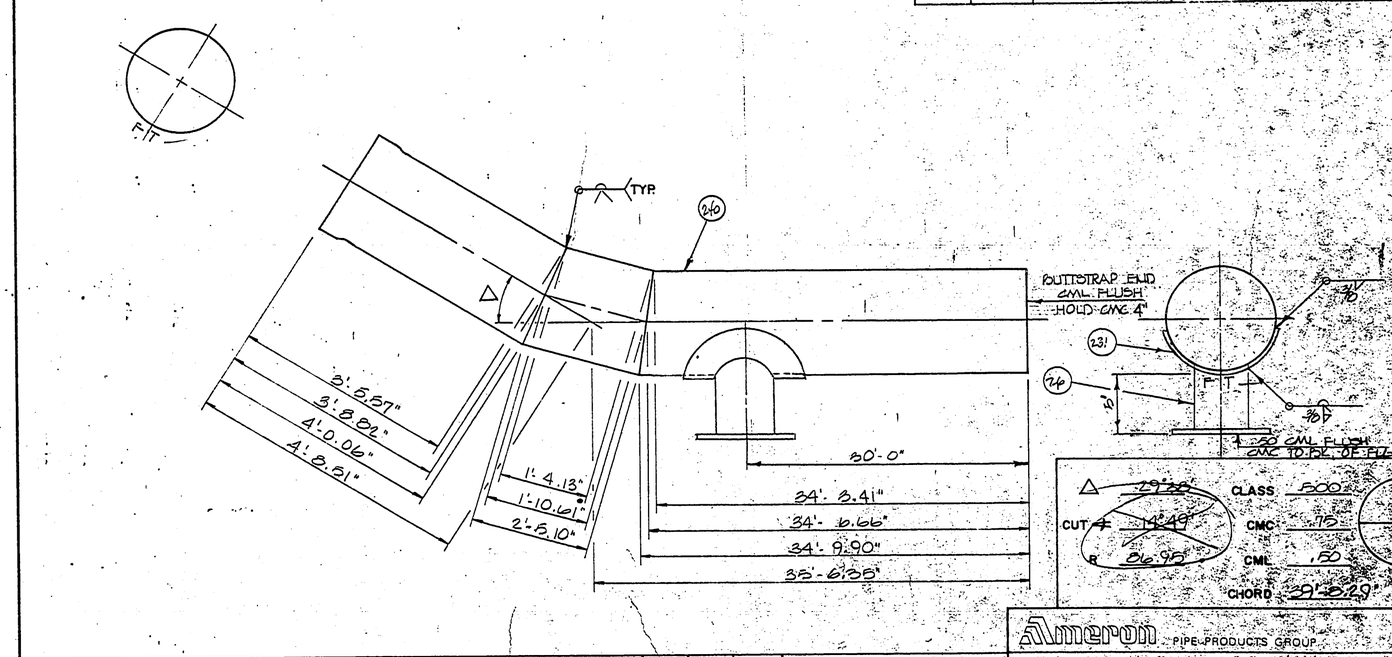

Ameron PIPE PRODUCTS GROUP

RUSSIAN RIVER - CONTRACT #1

CHANGE ORDERS	SYMBOL	REVISION	DATE	BY	APPV'D.

UNLESS OTHERWISE SPECIFIED DIMENSIONS ARE IN INCHES

TOLERANCES

FRACT.	.X	.XX	.XXX	ANGLE
±	±	±	±	±

DWG. SCALE

DRAWN	CLL	12/15/75
CHECKED		
APPV'D.		

2265

60-4-102.128.68

FLAG	ITEM NO.	QUANTITY THIS DWG	DESCRIPTION	MATERIAL SPECIFICATION
	240	33'-3"	49.875" O.D. x 3/8" R CYL.	

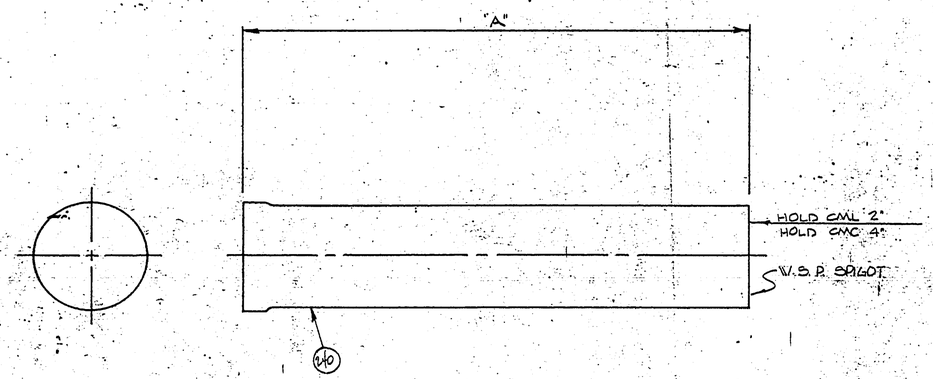

PC. NO.	CLASS	QTY. SCH.	"A"	REF. SHT.
391	500	16	18'-3"	2L6
393	500	17	15'-0"	2L7

Ameron PIPE PRODUCTS GROUP

RUSSIAN RIVER - CONTRACT #1

CHANGE ORDERS	SYMBOL	REVISION	DATE	BY	APPV'D

UNLESS OTHERWISE SPECIFIED DIMENSIONS ARE IN INCHES
TOLERANCES
FRACT. ± | .X ± | .XX ± | .XXX ± | ANGLE ±

DWG. SCALE

DRAWN	CLL	12/16/78	
CHECKED			
APPV'D		2265	2F21.0

1000-1000 (8/70)

60-4-102.128.69

BMI

2-CUT

FLAG	ITEM NO.	QUANTITY THIS DWG.	DESCRIPTION	MATERIAL SPECIFICATION
	240	40'-2"	49.875" O.D. x 3/8" R CYL.	

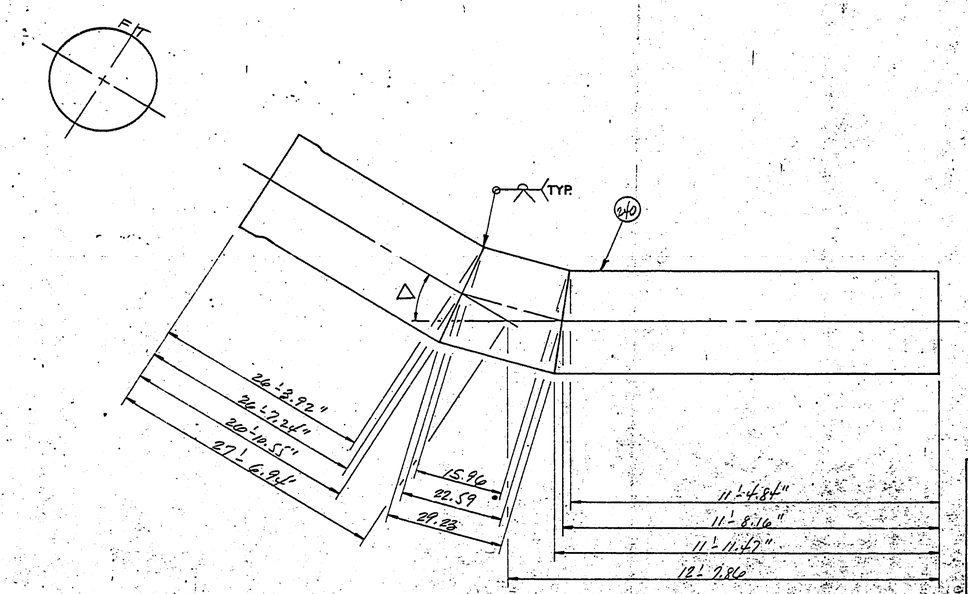

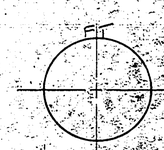

△	30°18'	CLASS	500
CUT ⊄	7°49'	CMC	75
R	84.95	CML	50
		CHORD	39'-0.36"

Ameron PIPE PRODUCTS GROUP

RUSSIAN RIVER CONTRACT #1

CHANGE ORDERS	SYMBOL	REVISION	DATE	BY	APPV'D

UNLESS OTHERWISE SPECIFIED DIMENSIONS ARE IN INCHES

TOLERANCES

FRACT.	.X	.XX	.XXX	ANGLE
±	±	±	±	±

DWG. SCALE

DRAWN	KW	12/15/75
CHECKED		
APPV'D		

2265

2F22.0

1000-1000 (8/70)

60-4-102.128.70

2-CUT

FLAG	ITEM NO.	QUANTITY THIS DWG.	DESCRIPTION	MATERIAL SPECIFICATION
	240	10'-2"	49.875" O.D. x 3/8" PL CYL.	

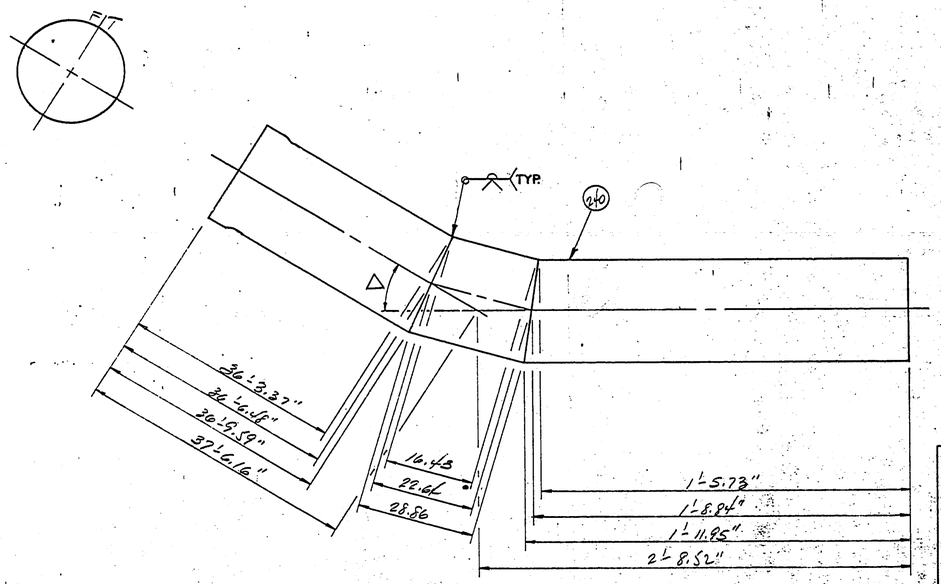

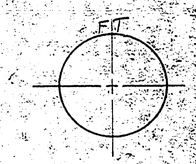

△	28°25'	CLASS	500
CUT ⊥	7°06'	CMC	75
R	90.84	CML	50
		CHORD	29'-11.01"

394
227

Ameron PIPE PRODUCTS GROUP

RUSSIAN RIVER CONTRACT #1

CHANGE ORDERS	SYMBOL	REVISION	DATE	BY	APPV'D.

UNLESS OTHERWISE SPECIFIED DIMENSIONS ARE IN INCHES

TOLERANCES

FRACT.	.X	.XX	.XXX	ANGLE
±	±	±	±	±

DWG. SCALE

DRAWN	KW	12/15/75
CHECKED		
APPV'D.		

2265

60-4-102.128.71

1000 1000 8 70

2-CUT

2F24

FLAG	ITEM NO	QUANTITY THIS DWG.	DESCRIPTION	MATERIAL SPECIFICATION
	240	40'-2"	49.875" O.D. X 3/8" PL CYL	
	26	1	18" "SKIRTED FLG. SEE SHT. 283	
	231	1	38.25" O.D. X 3/8" PL COLLAR ROLL TO 24.94" R.	

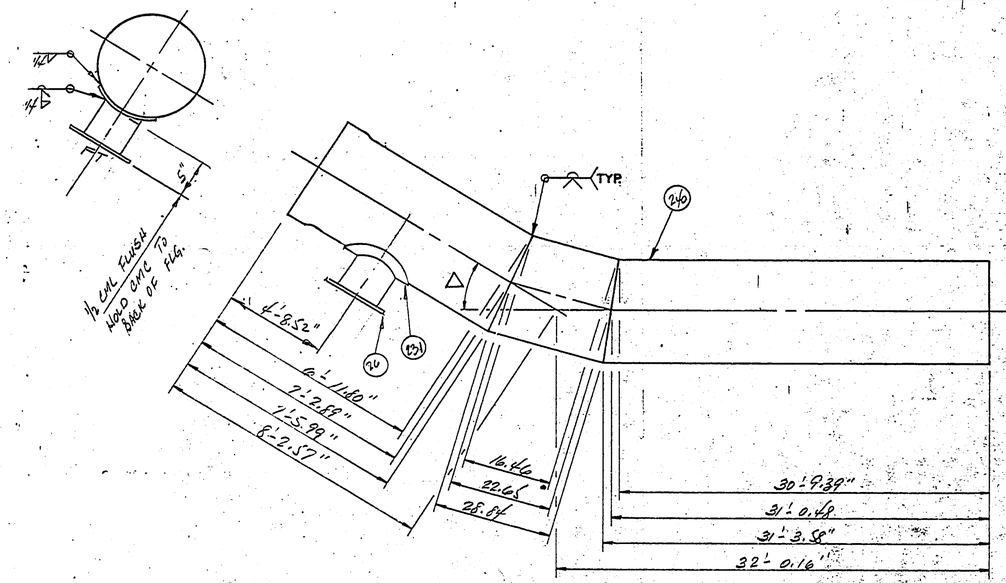

△	28°18'	CLASS	500
CUT ≠	7°04'	CMC	.75
R	91.23	CML	.50
		CHORD	39'-5.26"

395
217

Ameron PIPE PRODUCTS GROUP

RUSSIAN RIVER - CONTRACT #1

UNLESS OTHERWISE SPECIFIED DIMENSIONS ARE IN INCHES

TOLERANCES

FRACT.	.X	.XX	.XXX	ANGLE
±	±	±	±	±

DWG. SCALE

DRAWN	CLL	12/15/75
CHECKED		
APPV'D.		

60-4-102.128.72

2265

2F24.0

CHANGE ORDERS	SYMBOL	REVISION	DATE	BY	APPV'D.

1000 1000 (9-70)

FLAG	ITEM NO.	QUANTITY THIS DWG	DESCRIPTION	MATERIAL SPECIFICATION
	237	18'-10.60"	31.875" O.D. x 8GA CYL.	

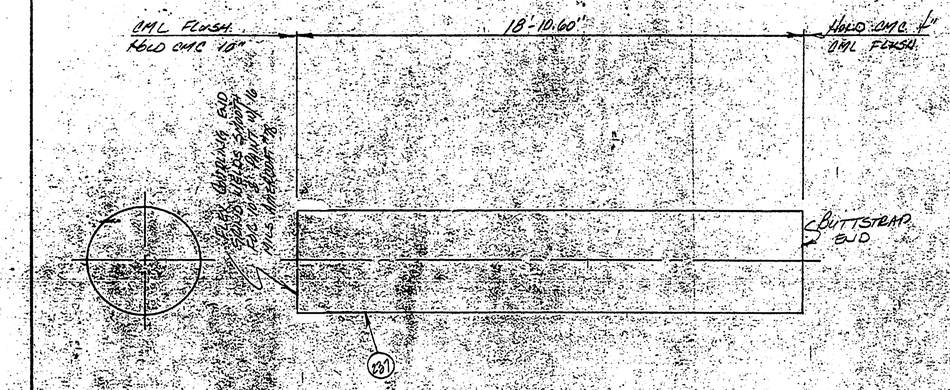

CLASS 500
CMC 75
CML 75
CS # 12

414
268

Ameron PIPE PRODUCTS GROUP

Russian River - Contract # 1

CHANGE ORDERS	SYMBOL	REVISION	DATE	BY	APPV'D

UNLESS OTHERWISE SPECIFIED DIMENSIONS ARE IN INCHES

TOLERANCES

FRACT.	X	XX	XXX	ANGLE
±	±	±	±	±

DWG. SCALE

DRAWN KW 12-15-75
CHECKED
APPV'D.

60-4-102.128.73

2265

2F25b

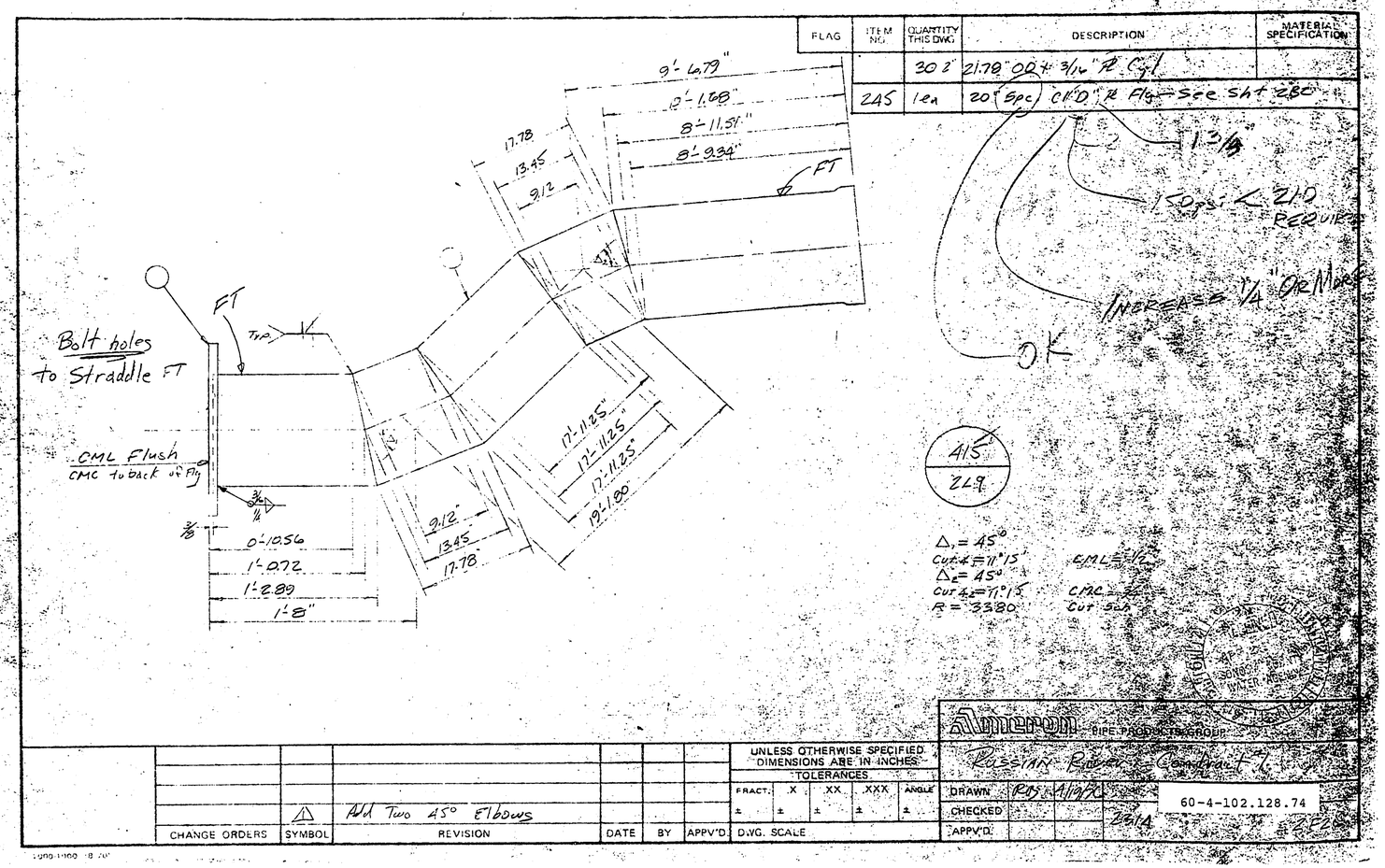

FLAG
ITEM NO.
QUANTITY THIS DWG
DESCRIPTION
MATERIAL SPECIFICATION
30 2" 21.78" OD x 3/16" PL Cyl
245 1 ea 20" Spc C1"D" PL Flg — See Sht 2B0
9'-6.79"
0'-1.68"
8'-11.51"
8'-9.34"
17.78
13.45
9.12
FT
Bolt holes to Straddle FT
CML Flush
CMC to back of Flg
0'-10.56
1'-0.72
1'-2.89
1'-8"
17'-11.25"
17'-11.25"
17'-11.25"
19'-1.80
9.12"
13.45
17.78
1 3/8
150 psi < 210 REQUIRED
INCREASE 1/4" OR MORE
OK
415
249
Δ1 = 45°
Cut ∠ = 11°15'
Δ2 = 45°
Cut ∠2 = 11°15'
R = 33.80
CML = 1/2
CMC = 3/4
Cut Sch
Ameron PIPE PRODUCTS GROUP
Russian River Contract 1
UNLESS OTHERWISE SPECIFIED DIMENSIONS ARE IN INCHES
TOLERANCES
FRACT. X XX XXX ANGLE
DRAWN
CHECKED
APPV'D
60-4-102.128.74
2314
2F2
CHANGE ORDERS
SYMBOL
REVISION
DATE
BY
APPV'D
Add Two 45° Elbows
DWG. SCALE

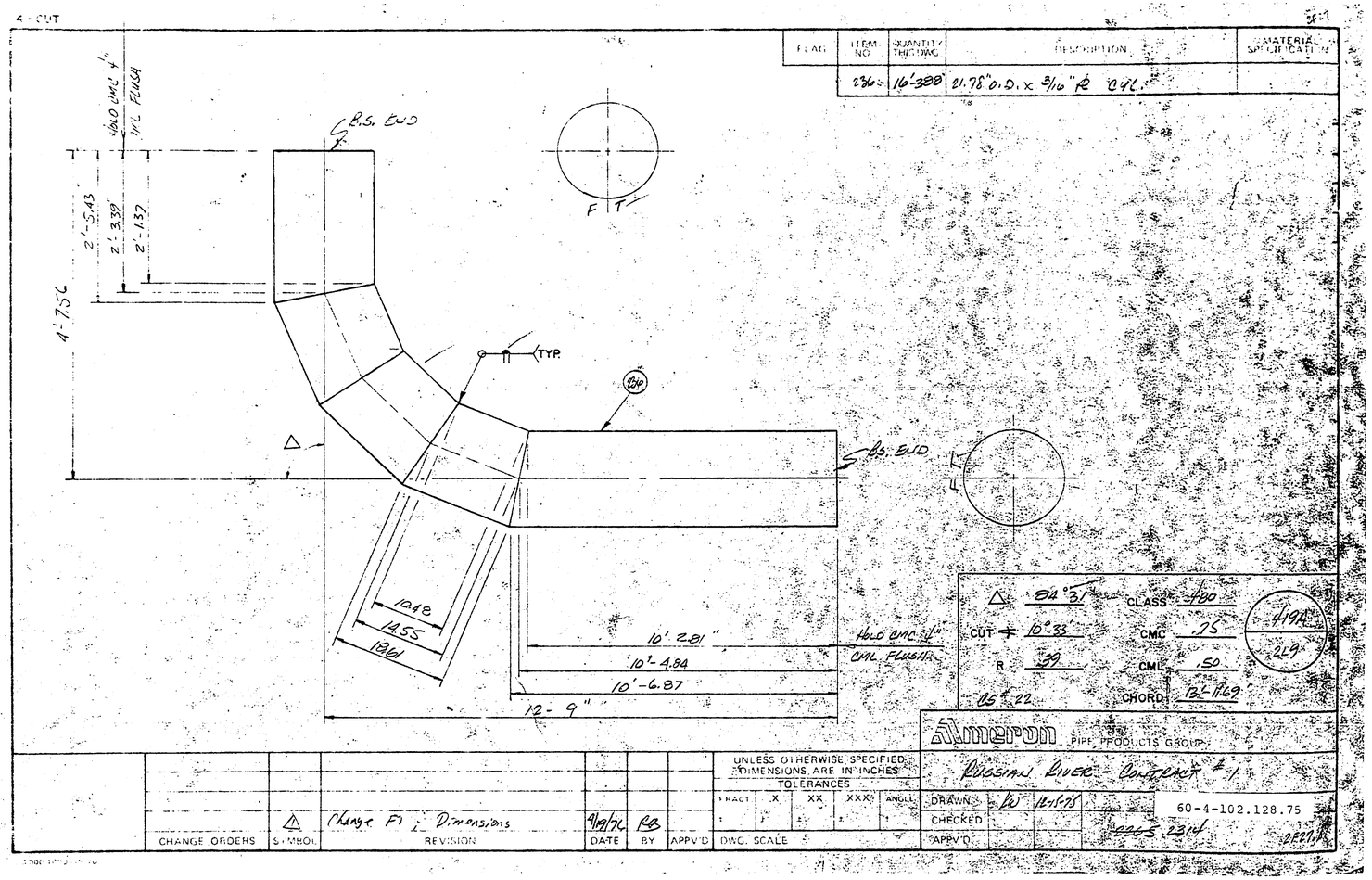

4-CUT
FLAG
ITEM NO
QUANTITY THIS DWG
DESCRIPTION
MATERIAL SPECIFICATION
236
16'-388
21.78" O.D. x 3/16" PL CYL.
B.S. END
F T
TYP.
B.S. END
4'-7.56
2'-5.43
2'-3.39
2'-1.37
HOLD CMC 4"
CML FLUSH
10.48
14.55
18.61
10'-2.81"
10'-4.84
10'-6.87
12'-9"
HOLD CMC 4"
CML FLUSH
84°31'
CLASS 480
CUT 10°33
CMC .75
R .39
CML .50
CS # 22
CHORD 13'-11.69
419A
2L9
Ameron PIPE PRODUCTS GROUP
RUSSIAN RIVER - CONTRACT # 1
UNLESS OTHERWISE SPECIFIED DIMENSIONS ARE IN INCHES
TOLERANCES
FRACT X XX XXX ANGLE
DRAWN
CHECKED
APPV'D
12-15-75
60-4-102.128.75
2314
CHANGE ORDERS
SYMBOL
REVISION
DATE
BY
APPV'D
DWG. SCALE
Change F1 Dimensions
9/19/76
RB

FLAG	ITEM NO.	QUANTITY THIS DWG.	DESCRIPTION	MATERIAL SPECIFICATION
	235	5'-9"	21.78"O.D. x 5/16"R C42. (ROLL MP)	

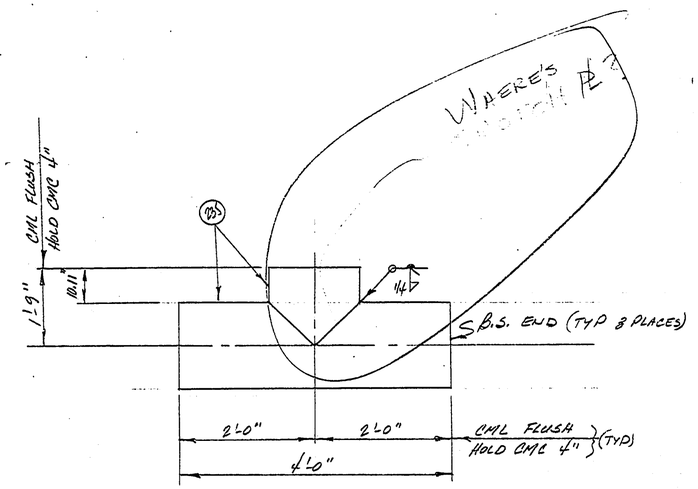

4198
219

CMC = .175
CML = .150

CHANGE ORDERS	SYMBOL	REVISION	DATE	BY	APPV'D.

UNLESS OTHERWISE SPECIFIED DIMENSIONS ARE IN INCHES
TOLERANCES
FRACT. ± | .X ± | .XX ± | .XXX ± | ANGLE ±
DWG. SCALE

Ameron PIPE PRODUCTS GROUP

RUSSIAN RIVER - CONTRACT #1

DRAWN LW 12-15-75
CHECKED
APPV'D.

2265 2F28.0

60-4-102.128.76

1000-1000 (8/70)

FLAG	ITEM NO.	QUANTITY THIS DWG.	DESCRIPTION	MATERIAL SPECIFICATION
	25	1	42" CL. "D" BLIND FLG. SEE SHT. 28	

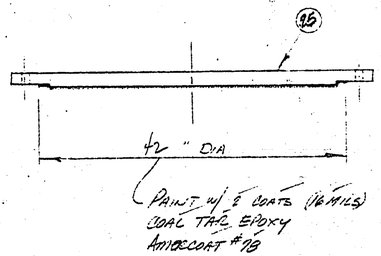

350A
2L4

CHANGE ORDERS	SYMBOL	REVISION	DATE	BY	APPV'D.

UNLESS OTHERWISE SPECIFIED DIMENSIONS ARE IN INCHES

TOLERANCES

FRACT.	X	XX	XXX	ANGLE
±	±	±	±	±

DWG. SCALE

Ameron PIPE PRODUCTS GROUP

RUSSIAN RIVER - CONTRACT #

DRAWN	RW	12-15-75
CHECKED		
APPV'D.		

2265

2F29.D

60-4-102.128.77

1000-1000 (8/70)

FLAG	ITEM NO.	QUANTITY THIS DWG.	DESCRIPTION	MATERIAL SPECIFICATION
	27	1	18" BLIND FLG. SEE SHT. 105	
	21	1	4"x150# SLIP-ON FLG. F.F.	
	23Y	5"	4" STD WT. STEEL PIPE	

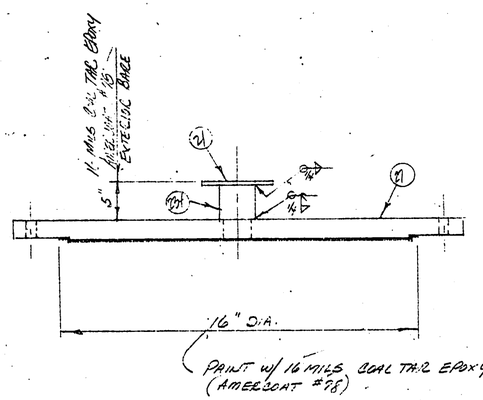

Pc. No.	LAYOUT REF.
354A	24

CHANGE ORDERS	SYMBOL	REVISION	DATE	BY	APPV'D.

UNLESS OTHERWISE SPECIFIED DIMENSIONS ARE IN INCHES
TOLERANCES
FRACT. ± .X ± .XX ± .XXX ± ANGLE ±

DWG. SCALE

Ameron PIPE PRODUCTS GROUP

RUSSIAN RIVER - CONTRACT A

DRAWN
CHECKED
APPV'D.

2005

60-4-102.128.78

1000-1000 (8/70)

FLAG	ITEM NO.	QUANTITY THIS DWG.	DESCRIPTION	MATERIAL SPECIFICATION
	28	3	18" BLIND FLG. ~~SEE SHT. 201~~	

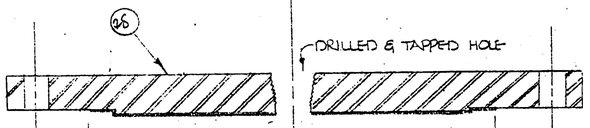

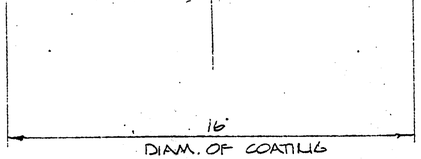

NOTE; COAT INSIDE BLIND FLG. AS SHOWN W/ 2 COATS (16 MILS) COAL TAR EPOXY - AMERCOAT #78

PC. NO.	REF. SHT.
368A	245
380A	246-F
389A	246

CHANGE ORDERS	SYMBOL	REVISION	DATE	BY	APPV'D

UNLESS OTHERWISE SPECIFIED DIMENSIONS ARE IN INCHES

TOLERANCES

FRACT.	X	XX	XXX	ANGLE
±	±	±	±	±

DWG. SCALE

Amercoat PIPE PRODUCTS GROUP

RUSSIAN RIVER - CONTRACT #

DRAWN		
CHECKED		
APPV'D.	3865	2E31.0

60-4-102.128.79

1000-1000 (8/70)

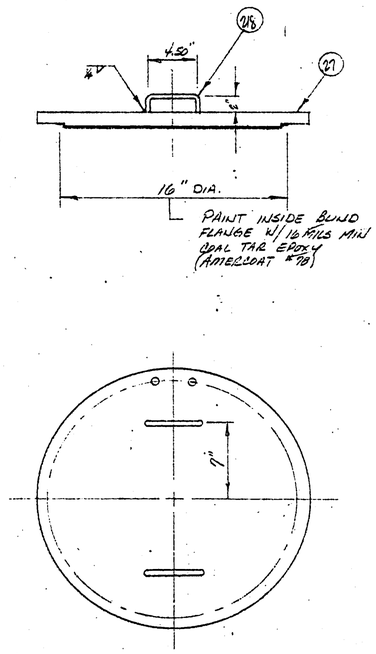

FLAG	ITEM NO.	QUANTITY THIS DWG.	DESCRIPTION	MATERIAL SPECIFICATION
	27	1	18" BLIND FLG. SEE SHT 285	
	218	18"±	1/2"φ ROD HANDLES	

Pc. No.	LAYOUT REF.
395A	2L7

Ameron PIPE PRODUCTS GROUP

RUSSIAN RIVER — CONTRACT #

UNLESS OTHERWISE SPECIFIED DIMENSIONS ARE IN INCHES

TOLERANCES

FRACT.	.X	.XX	.XXX	ANGLE
±	±	±	±	±

DWG. SCALE

DRAWN

CHECKED

APPV'D.

2265

CHANGE ORDERS	SYMBOL	REVISION	DATE	BY	APPV'D.

1000-1000 (8/70)

60-4-102.128.80

2F33

FLAG	ITEM NO	QUANTITY THIS DWG	DESCRIPTION	MATERIAL SPECIFICATION
	238	8'-4.14"	43.875" O.D. x 5/16" PL CYL.	
	237	40'-2"	31.875" O.D. x 8GA. CYL.	
	225	1	43.875" O.D. x 31.875" O.D. x 3'-6" LONG x 5/16 PL ROLLED CONCENTRIC REDUCER	ASTM A283 GR. C
	232	1	30" ROLLED CROTCH PLATE SEE SHT. 238	
	210	1	2" x 3000# THREDOLET ON A 49.88" RUN	
	227	1	3/16" PL x 6" SQ. COLLAR - ROLL TO A 13.94" RADIUS	ASTM A283 GR. C

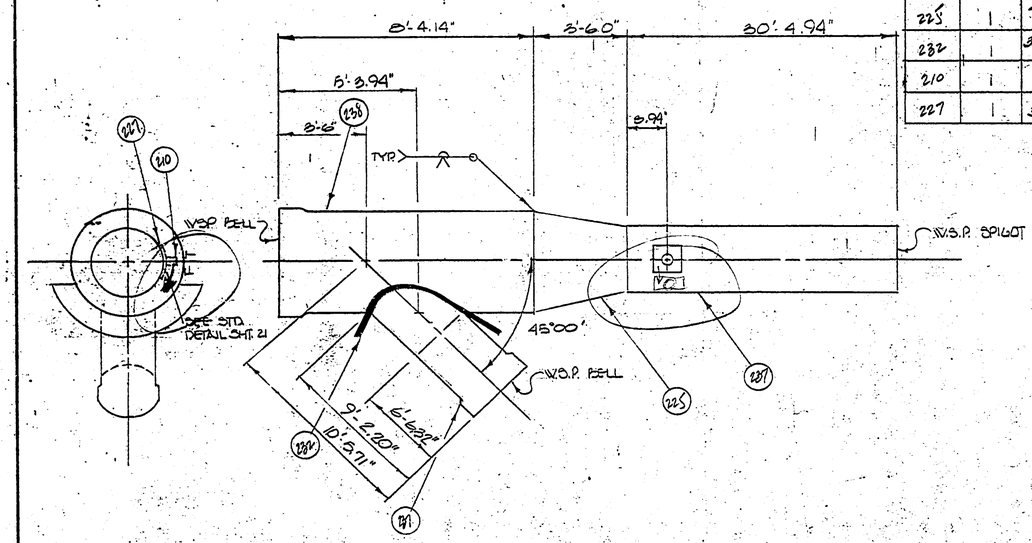

CLASS 500
CMC .75
42" .63
CML 30" .75
42" CUT SCH. 15
30" CUT SCH. 14

322
2L2

Ameron PIPE PRODUCTS GROUP

RUSSIAN RIVER - CONTRACT #1

CHANGE ORDERS	SYMBOL	REVISION	DATE	BY	APPV'D

UNLESS OTHERWISE SPECIFIED DIMENSIONS ARE IN INCHES.
TOLERANCES
FRACT. ± | X ± | XX ± | XXX ± | ANGLE ±
DWG. SCALE

DRAWN CLL 12/11/75
CHECKED
APPV'D
2265
2F33.0

1000 1000 (8/70)

60-4-102.128.81

FLAG	ITEM NO.	QUANTITY THIS DWG.	DESCRIPTION	MATERIAL SPECIFICATION
	239	41'-2"	49.875" O.D. x 1/4" R CYL.	
	241	9'-3"	43.875" O.D. x 5/16" R CYL. ROLL-UP	
	226	1	49.875" O.D. x 43.875" O.D. x 3'-0" LG x 3/8" R ROLLED CONCENTRIC REDUCER	ASTM A285 GR. C
	233	1	1/2" ROLLED CROTCH PLATE - SEE SHT 2F35	
	23	1	42" x 6.31" O.A.L. CL "D" SKIRTED PLUG - SEE SHT. 2F35	

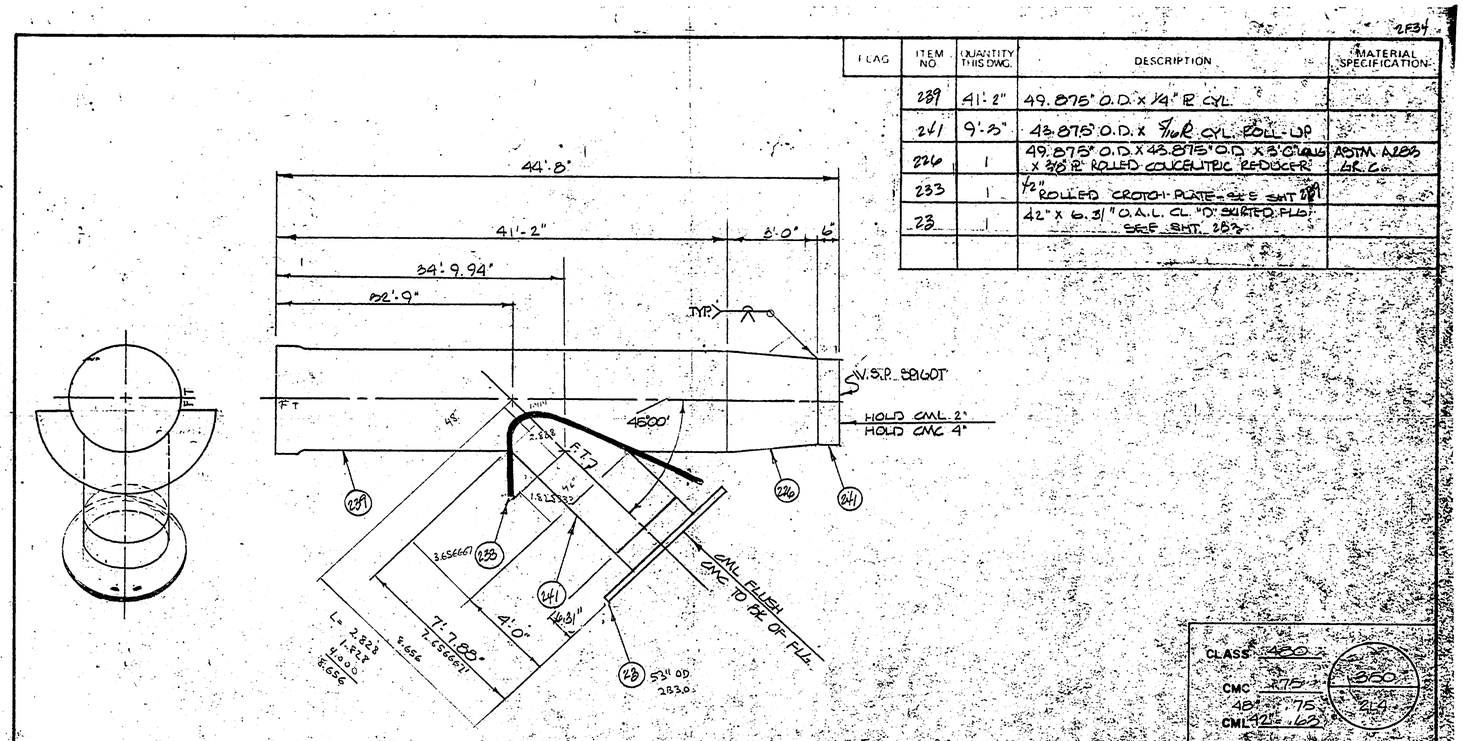

CHANGE ORDERS	SYMBOL	REVISION	DATE	BY	APPV'D

UNLESS OTHERWISE SPECIFIED DIMENSIONS ARE IN INCHES
TOLERANCES:
FRACT. ± | X ± | XX ± | XXX ± | ANGLE ±

DWG. SCALE

Ameron PIPE PRODUCTS GROUP

RUSSIAN RIVER CONTRACT #1

DRAWN CCL 12/11/78
CHECKED
APPV'D

2265

2F34.0

60-4-102.128.82

1000 1000 (8/70)

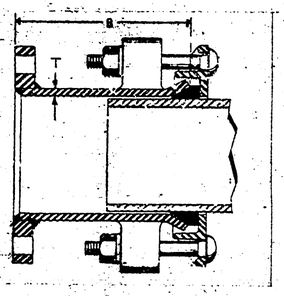

SPECIFICATIONS

1. COUPLINGS SHALL BE SMITH BLAIR NO. 913, BAKER NO. 602, OR EQUAL.

2. MATERIALS:

MIDDLE RING MANUFACTURES STD

FOLLOWER " "

BOLTS " "

NUTS " "

GASKET " "

3. PAINT OR COATING:

MIDDLE RING INSIDE 16 MILS MIN. COAL TAR EPOXY; BITUMASTIC 300-M OR AMERCOAT #78

MIDDLE RING OUTSIDE 8 MILS MIN. COAL TAR EPOXY; BITUMASTIC 300-M OR AMERCOAT #78

FOLLOWER "

BOLTS CADMIUM PLATED ASTM A-164

NUTS " " "

NOTE: PIPE O. D. INCLUDES PAINT APPLIED TO PIPE END

PIECE NO.	SHEET NO.	MT'L LIST	QUANTITY	PIPE O. D. (see note)	MIDDLE RING B	MIDDLE RING T	FLANGE SIZE	FLANGE CLASS
		29	1	31.907	10 11/16	1/4	30	"D"

Ameron PIPE PRODUCTS GROUP

RUSSIAN RIVER - CONTRACT #1

SYMBOL	REVISION	DATE	BY	APP'V'D

DRAWN LD 12-12-77

CHECKED

APP'V'D

FLANGED COUPLING ADAPTER

1205

60-4-102.128.83

1000-1004 (8/70)

"D"

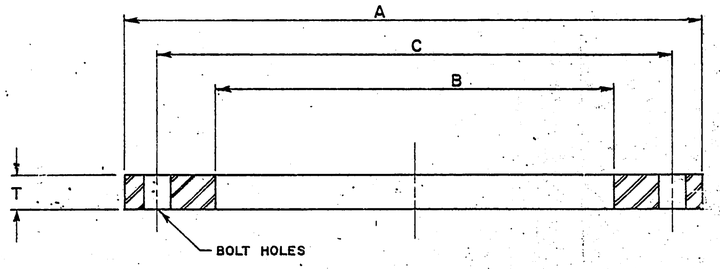

NOMINAL PIPE SIZE	MAT'L LIST NO	QUANTITY	I. D. FLANGE B	O.D. FLANGE A	NUMBER BOLT HOLES	BOLT CIRCLE C	DIAM. BOLT HOLES	FLANGE THICKNESS T
6				11	8	9 1/2	7/8	11/16
8				13 1/2	8	11 3/4	7/8	11/16
10				16	12	14 1/4	1	11/16
12				19	12	17	1	13/16
14				21	12	18 3/4	1 1/8	15/16
16				23 1/2	16	21 1/4	1 1/8	1
18				25	16	22 3/4	1 1/4	1 1/16
20	22		21.84	27 1/2	20	25	1 1/4	1 1/8
24				32	20	29 1/2	1 3/8	1 1/4

SPECIFICATIONS

STEEL:
ASTM A-283, Gr. B, C or D (OR, ASTM A-36)

FACING:
THE FLANGES SHALL BE FACED SMOOTH OR MAY HAVE A SERRATED FINISH OF APPROXIMATELY 32 SERRATIONS PER INCH, APPROXIMATELY 1/64" DEEP. SERRATIONS MAY BE SPIRAL OR CONCENTRIC. EDGES OF FACED SURFACES AND BOLT HOLES SHALL BE DEBURRED.

TOLERANCES:
INSIDE DIAMETER + 1/16" − 0"
OUTSIDE DIAMETER ± 1/8"
THICKNESS OF FLANGES + 1/8" − 0"
BOLT CIRCLE ± 1/16"
BOLT HOLES SHALL BE EQUALLY SPACED ± 1/64"
DIAMETERS A, B AND C TO BE CONCENTRIC ABOUT CENTERLINE ± 1/16"

Ameron PIPE PRODUCTS GROUP

RUSSIAN RIVER - CONTRACT #1

SYMBOL	REVISION	DATE	BY	APPV'D

DRAWN	KW	12-15-75
CHECKED		
APPV'D.		

AWWA CLASS "D" FLANGES

226 S 232-0

60-4-102.128.84

1000 1004 (8-70)

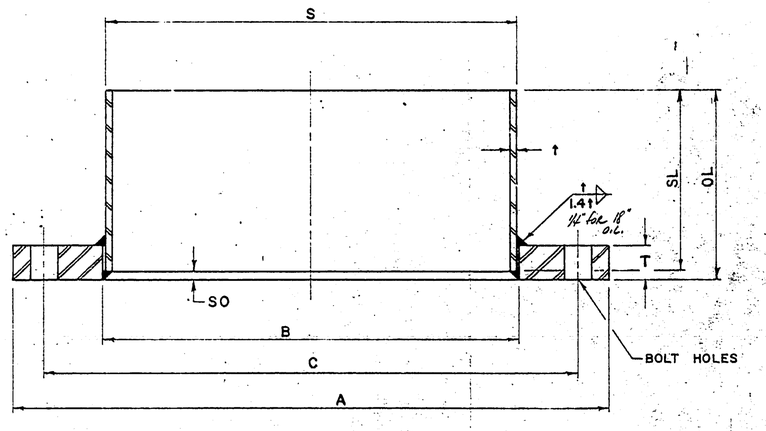

SPECIFICATIONS

STEEL:

FLANGE - ASTM A-283, Gr. B, C or D
SKIRT - ASTM A-283, Gr. C or D
ASTM A-570, Gr. C
} OR ASTM A-36

FACING:

FINAL MACHINING OF THE FLANGES SHALL BE DONE ONLY AFTER ALL WELDING TO THE PIPE SKIRT IS COMPLETED. FLANGES SHALL BE FACED NORMAL TO THE LONGITUDINAL AXIS OF THE PIPE. THE FLANGES SHALL BE FACED SMOOTH OR MAY HAVE A SERRATED FINISH OF APPROXIMATELY 32 SERRATIONS PER INCH, APPROXIMATELY 1/64" DEEP. SERRATIONS MAY BE SPIRAL OR CONCENTRIC. EDGES OF FACED SURFACES AND BOLT HOLES SHALL BE DEBURRED.

TOLERANCES:

INSIDE DIAMETER + 1/16" - 0"

OUTSIDE DIAMETER ± 1/8"

THICKNESS OF FLANGES + 1/8" - 0"

BOLT CIRCLE ± 1/16"

OUTSIDE DIAMETER SKIRT ± 0.080" MEASURED AT ANY POINT

BOLT HOLES SHALL BE EQUALLY SPACED ± 1/64

DIAMETERS A, B AND C TO BE CONCENTRIC ABOUT CENTERLINE ± 1/16"

SKIRT CLOSING SEAMS SHALL BE FULL PENETRATION BUTTWELD WITH 1/16" MAX CROWN

NOMINAL PIPE SIZE	MAT'L LIST NO	QUANTITY	OVERALL LENGTH OL	SKIRT LENGTH SL	SKIRT THICKNESS t	SKIRT OFFSET SO	SKIRT O.D. S	I.D. FLANGE B	O.D. FLANGE A	NUMBER BOLT HOLES	BOLT CIRCLE C	DIAM. BOLT HOLES	FLANGE THICKNESS T
8	4		6.38	6.00	.38	.38	8.625	8.94	13 1/2	12	11	1 1/16	1 3/4
18	24		12.50	12.00	.50	.50	18.00	18.06	28	24	24 3/4	1 3/16	1 3/8
42	23		6.31	6.00	.31	.31	43.375	43.94	53	36	49 1/2	1 5/8	1 3/4

Flange Special

AMERON PIPE PRODUCTS GROUP

RUSSIAN RIVER - CONTRACT #1

SYMBOL	REVISION	DATE	BY	APPV'D

DRAWN	KW	12-15-75
CHECKED		
APPV'D		

2263 — 283.0

60-4-102.128.85

BLIND

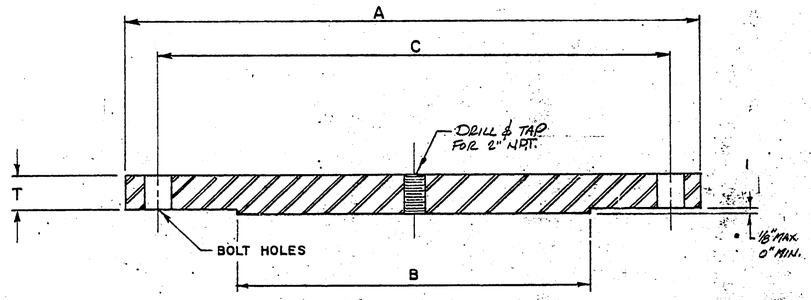

NOMINAL PIPE SIZE	MAT'L LIST NO	QUANTITY	RAISED FACE B	O.D. FLANGE A	NUMBER BOLT HOLES	BOLT CIRCLE C	DIAM. BOLT HOLES	FLANGE THICKNESS T
12			11	19	12	17	1	13/16
14			13	21	12	18 3/4	1 1/8	15/16
16			15	23 1/2	16	21 1/4	1 1/8	1
18	28		15	28	24	24 3/4	1 3/8	1 3/8
20			19	27 1/2	20	25	1 1/4	1 1/8
24			23	32	20	29 1/2	1 3/8	1 1/4
30			29	38 3/4	28	36	1 3/8	1 3/8
36			35	46	32	42 3/4	1 5/8	1 5/8
42			41	53	36	49 1/2	1 5/8	1 3/4
48			47	59 1/2	44	56	1 5/8	1 3/4

SPECIFICATIONS

STEEL:
ASTM A-283, Gr. B, C or D OR ~~ASTM A-86~~

FACING:
THE FLANGES SHALL BE FACED SMOOTH OR MAY HAVE A SERRATED FINISH OF APPROXIMATELY 32 SERRATIONS PER INCH, APPROXIMATELY 1/64" DEEP. SERRATIONS MAY BE SPIRAL OR CONCENTRIC. EDGES OF FACED SURFACES AND BOLT HOLES SHALL BE DEBURRED.

TOLERANCES:

RAISED FACE DIAMETER + 0" − 1/8"

OUTSIDE DIAMETER ± 1/8"

THICKNESS OF FLANGES + 1/8" − 0"

BOLT CIRCLE ± 1/16"

BOLT HOLES SHALL BE EQUALLY SPACED ± 1/64"

DIAMETERS A, B AND C TO BE CONCENTRIC ABOUT CENTERLINE ± 1/16"

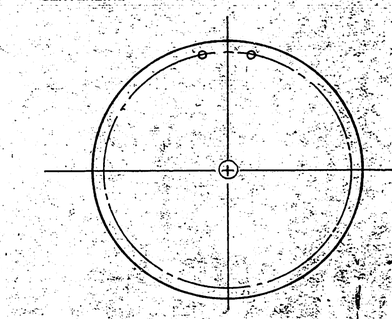

Ameron PIPE PRODUCTS GROUP

Russian River - Contract #1

SYMBOL	REVISION	DATE	BY	APPV'D

DRAWN	KW	12-15-75	AWWA [redacted] BLIND FLG.
CHECKED			2265 284.0
APPV'D			

60-4-102.128.86

"D" BLIND

285

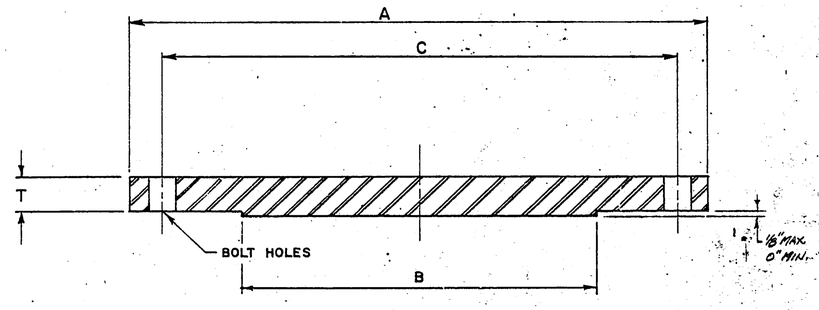

NOMINAL PIPE SIZE	MAT'L LIST NO	QUANTITY	RAISED FACE B	O.D. FLANGE A	NUMBER BOLT HOLES	BOLT CIRCLE C	DIAM. BOLT HOLES	FLANGE THICKNESS T
12			11	19	12	17	1	13/16
14			13	21	12	18 3/4	1 1/8	15/16
16			15	23 1/2	16	21 1/4	1 1/8	1
18	27		15	28	24	24 3/4	1 3/8	1 3/8
20			19	27 1/2	20	25	1 1/4	1 1/8
24			23	32	20	29 1/2	1 3/8	1 1/4
30			29	38 3/4	28	36	1 3/8	1 3/8
36			35	46	32	42 3/4	1 5/8	1 5/8
42	25		41	53	36	49 1/2	1 5/8	1 3/4
48			47	59 1/2	44	56	1 5/8	1 3/4

SPECIFICATIONS

STEEL:
ASTM A-283, Gr. B, C or D ~~ASTM A-36~~

FACING:
THE FLANGES SHALL BE FACED SMOOTH OR MAY HAVE A SERRATED FINISH OF APPROXIMATELY 32 SERRATIONS PER INCH, APPROXIMATELY 1/64" DEEP. SERRATIONS MAY BE SPIRAL OR CONCENTRIC. EDGES OF FACED SURFACES AND BOLT HOLES SHALL BE DEBURRED.

TOLERANCES:

RAISED FACE DIAMETER +0" − 1/8"

OUTSIDE DIAMETER ± 1/8"

THICKNESS OF FLANGES + 1/8" − 0"

BOLT CIRCLE ± 1/16"

BOLT HOLES SHALL BE EQUALLY SPACED ± 1/64"

DIAMETERS A, B AND C TO BE CONCENTRIC ABOUT CENTERLINE ± 1/16"

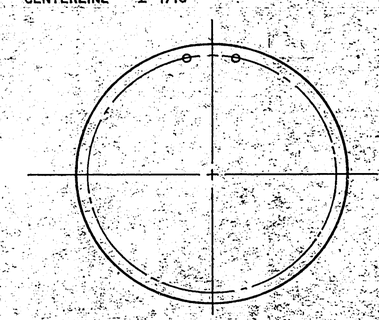

Ameron PIPE PRODUCTS GROUP

RUSSIAN RIVER - CONTRACT #1

SYMBOL	REVISION	DATE	BY	APPV'D.

DRAWN KW 12-15-75
CHECKED
APPV'D.

AWWA CLASS [redacted] BLIND FLG.

2265 285.0

1000 1004 (8-70)

60-4-102.128.87

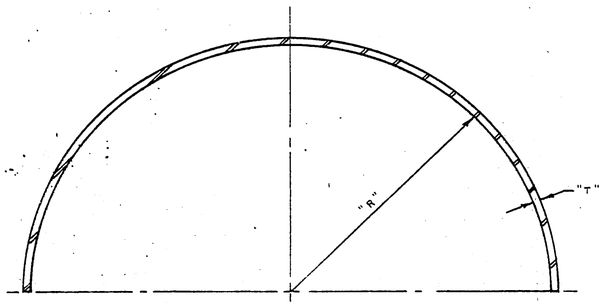

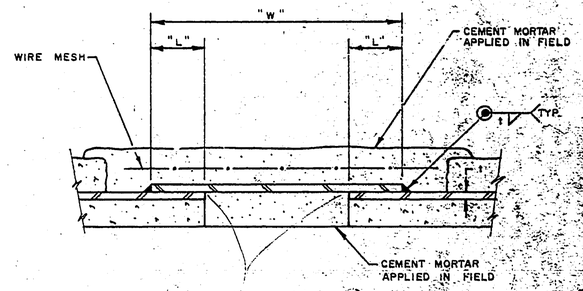

CKD By SLP

PIPE SIZE	MAT'L LIST NO	QUANTITY HALF B.S.	"T"	"W"	"R"	CUT LENGTH	"L"
30	223	2	3/16	6	15.94	50.36	2
48	224		3/8	6	24.94	78.93	2

SYMBOL	REVISION	DATE	BY	APPV'D.

Ameron PIPE PRODUCTS GROUP

RUSSIAN RIVER - CONTRACT #1

DRAWN	LW	12-11-75	BUTT STRAP
CHECKED			2265 286.0
APPV'D			

60-4-102.128.88

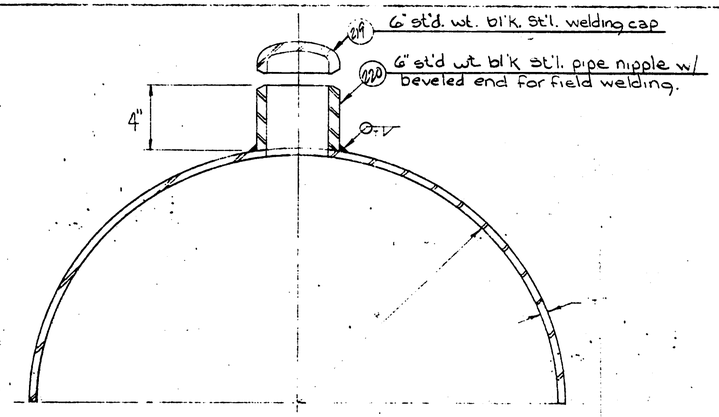

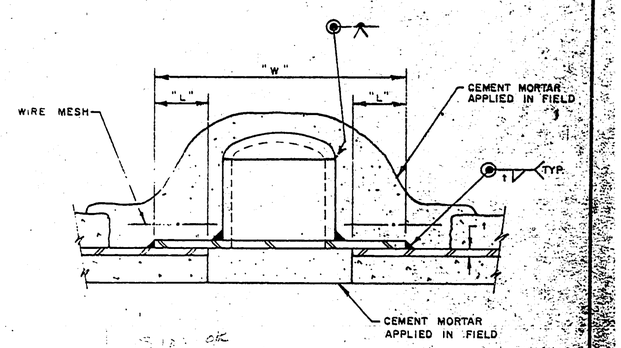

PIPE SIZE	MAT'L DIST. NO.	QUANTITY HALF B.S.	T	W	R	CUT LENGTH	"L"
20	222	4	3/16	10	10.89	69.02	2

Ameron PIPE PRODUCTS GROUP

RUSSIAN RIVER – CONTRACT #1

SYMBOL	REVISION	DATE	BY	APPV'D.

DRAWN	RW	12-16-75	BUTT STRAP – 20"
CHECKED			2265 287.0
APPV'D.			

60-4-102.128.89

MARK	BY	DATE	REVISION
1			
2			
3			

E.O. 2265
DR. BY: GLS
CHECKED:
DATE 12/16/75

WYE BRANCH ORE-PLATE REINFORCEMENT

RUSSIAN RIVER - CONTRACT #1

DWG NO. 2265 SHEET 250 REV.

250

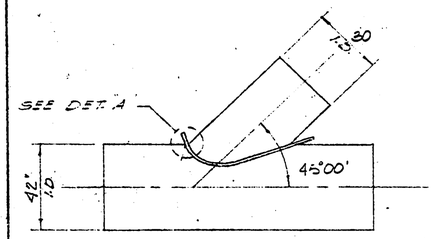

ASSEMBLED WYE

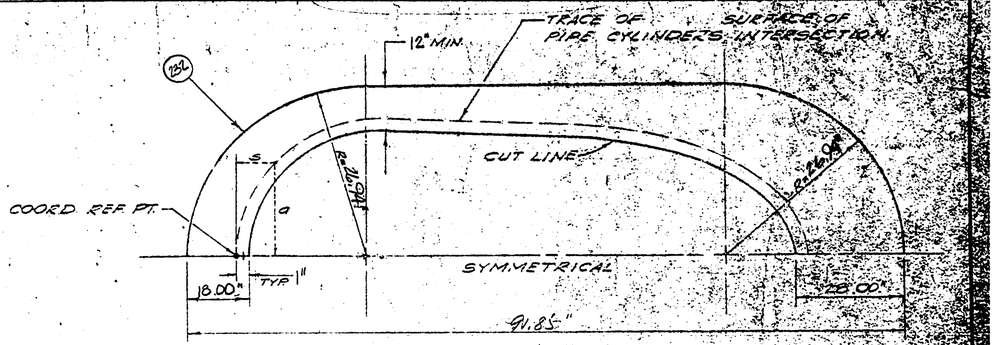

FLAT LAYOUT COORDINATES

S	0	.70	2.20	4.70	8.05	12.30	17.60	24.05	30.95	37.70	43.05	46.45	47.85				
a	0	4.05	7.85	11.15	13.70	15.30	15.94	15.30	13.70	11.15	7.85	4.05	0				

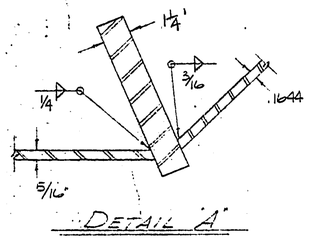

DETAIL "A"

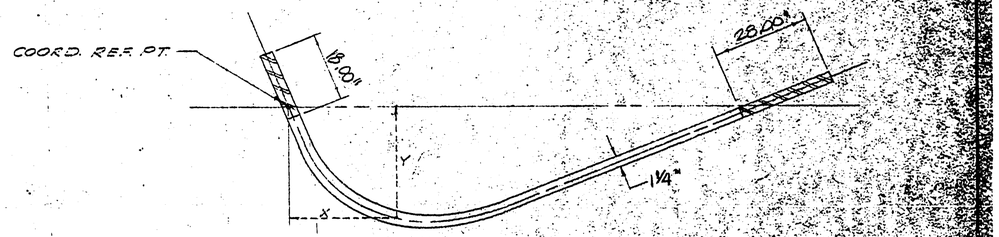

ROLL COORDINATES

X	0	.90	3.14	6.69	11.34	16.74	22.69	28.34	33.74	38.39	41.94	44.18	45.08				
Y	0	.40	1.40	2.95	4.80	6.15	6.86	6.15	4.80	2.95	1.40	.40	0				

60-4-102.128.90

285

DIETZGEN POST CLEARPRINT 1000 H-10 PADSOUT

MARK	BY	DATE	REVISION

P.O. 22665
DR. BY: GW
CHECKED:
DATE 12/15/75

WYE BRANCH ONE-PLATE REINFORCEMENT

RUSSIAN RIVER - CONTRACT #1

DWG. NO. 22665 SHEET 289 REV.

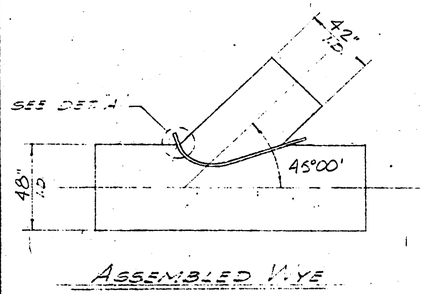

ASSEMBLED WYE

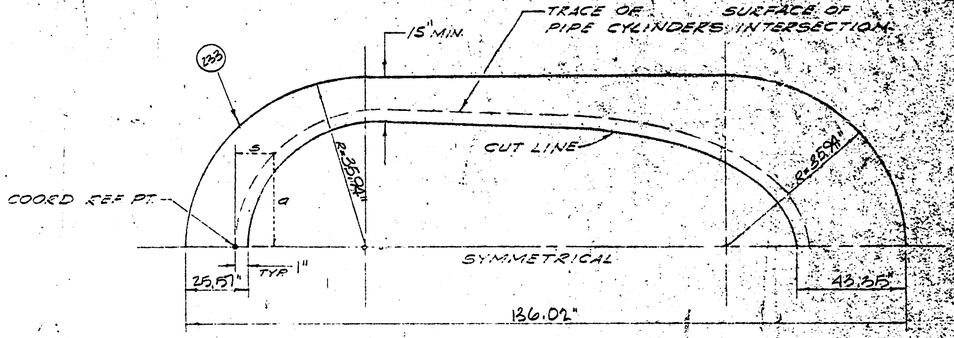

FLAT LAYOUT COORDINATES

S	0	.80	2.90	6.40	10.80	16.50	23.50	32.80	43.50	58.80	61.80	66.90	69.10			
a	0	6.70	10.90	15.60	19.00	21.25	21.94	21.25	19.00	15.60	10.90	6.70	0			

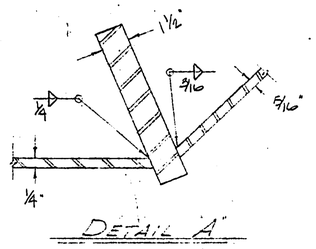

DETAIL A

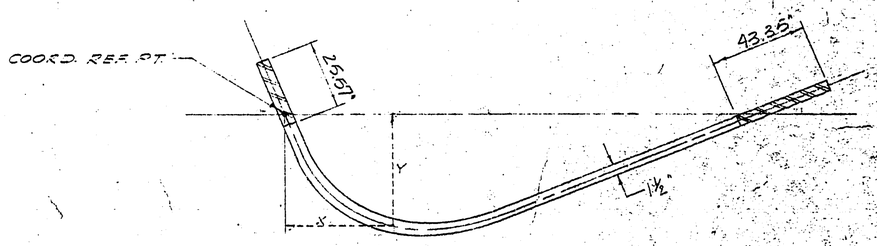

ROLL COORDINATES

X	0	1.00	3.90	8.80	15.00	22.70	30.95	38.90	46.50	52.95	57.00	60.85	62.05			
Y	0	.80	2.80	5.20	8.80	11.25	12.60	11.25	8.50	5.20	2.50	.80	.0			

60-4-102.128.91

289.2

© KEUFFEL AND ESSER CO. PRINTED IN U.S.A.

4F1

FLAG	ITEM NO.	QUANTITY SHIPPED	DESCRIPTION	MATERIAL SPECIFICATION
		—	49.875"O.D. CYLINDER	

CLASS 480 = 14" R (41)
" 440 = 4 GA (44)
" 360 = 3/16" R (43)
" 320 = 8GA (42)
" 260 = 10GA (45)

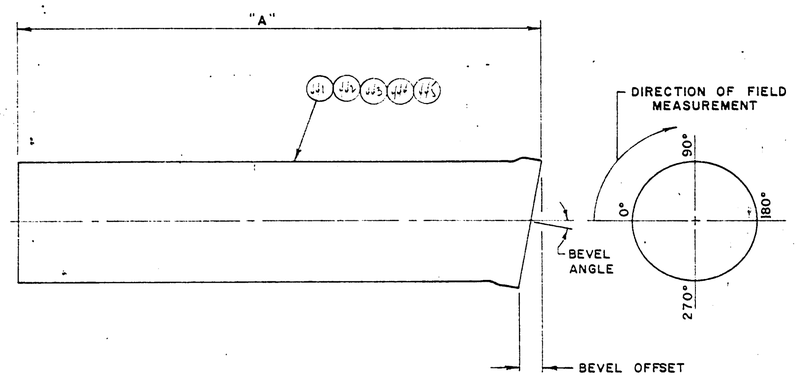

P.C. NO.	CUT SECT.	CLASS	"A"	BEVEL ANGLE	BEVEL OFFSET	F.T. LOCATION ANGULAR	F.T. LOCATION CIRCUM.	REF. SHT.
555	—	480	41'-2"	1°13'	3.08	270	—	4F17
559	—	440	41'-2"	2°52'	2.50	90	—	—
561	—	440	41'-2"	1°45'	1.52	270	—	4F15
564	—	440	41'-2"	2°46'	2.41	270	—	—
567	—	360	41'-2"	5°00"	4.36	90	—	—
574	—	320	41'-2"	5°00'	4.36	270	—	4F17
578	—	320	41'-2"	3°54'	3.40	90	—	—
579	—	320	41'-2"	2°08'	1.86	90	—	—
588	—	320	41'-2"	5°00"	4.36	270	—	—
589	—	320	41'-2"	3°47'	3.30	90	—	—
594	—	260	41'-2"	3°41'	3.21	270	—	4F17
597	—	260	41'-2"	4°45'	4.14	90	—	—
602	—	260	41'-2"	2°56'	2.56	90	—	—
604	—	260	41'-2"	3°03"	2.66	270	—	—
628	—	260	41'-2"	2°00'	1.74	270	—	4F24
633	—	260	41'-2"	4°34'	3.98	90	—	—
642	—	320	41'-2"	2°27'	2.13	270	—	—
643	—	320	41'-2"	2°44'	2.38	90	—	—
657	—	320	41'-2"	5°00'	4.36	90	—	—
661	—	320	41'-2"	3°26'	2.99	90	—	4F31

Pipe Special

CHANGE ORDERS	SYMBOL	REVISION	DATE	BY	APP'D

UNLESS OTHERWISE SPECIFIED DIMENSIONS ARE IN INCHES
TOLERANCES
FRACT ± X ± XX ± XXX ± ANGLE ±
DWG. SCALE

Ameron PIPE PRODUCTS GROUP

RUSSIAN RIVER - CONTRACT #1

DRAWN KW 1-6-76
CHECKED
APP'D

2314 4F1.0

60-4-102.128.92

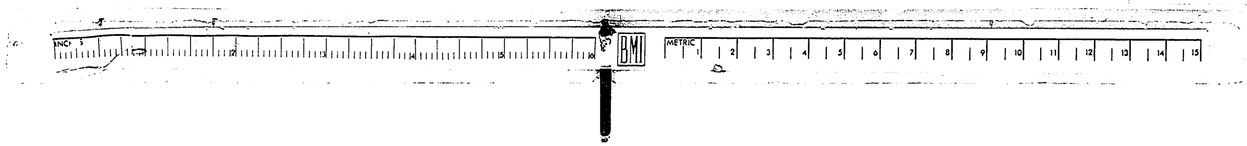

ITEM NO.	QUANTITY THIS DWG.	DESCRIPTION	MATERIAL SPECIFICATION
4A1	—	49.875" O.D. CYLINDER	

CLASS 320 = BGA.

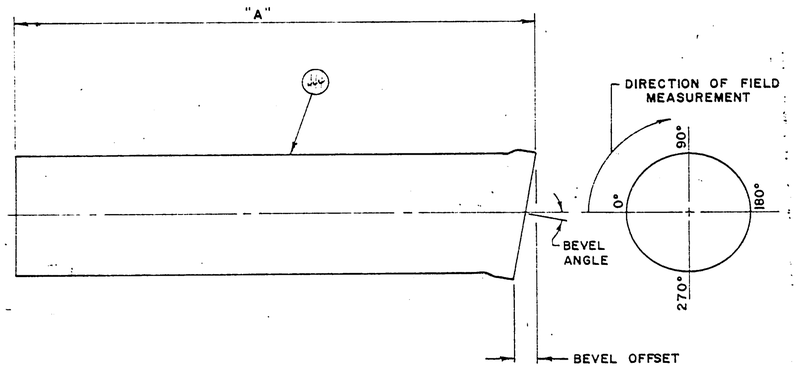

P.C. NO.	CUT SECT.	CLASS	"A"	BEVEL ANGLE	BEVEL OFFSET	F.T. LOCATION ANGULAR	F.T. LOCATION CIRCUM.	REF. SHT.
691	—	320	41'-2"	1°24'	1.22	270	—	—
692	—	320	41'-2"	3°12'	2.79	270	—	—
695	—	320	41'-2"	2°47'	2.42	90	—	—
856	—	320	41'-2"	1°37'	1.41	270	—	—
861	—	320	41'-2"	2°33'	2.22	270	—	4PS

CHANGE ORDERS	SYMBOL	REVISION	DATE	BY	APPV'D.

UNLESS OTHERWISE SPECIFIED DIMENSIONS ARE IN INCHES
TOLERANCES
FRACT. ± | X ± | XX ± | .XXX ± | ANGLE ±
DWG. SCALE

Ameron PIPE PRODUCTS GROUP

RUSSIAN RIVER - CONTRACT #1

DRAWN	LW	1-6-76
CHECKED		
APPV'D.		

2314 4F2.0

60-4-102.128.93

4F3

FEAD	ITEM NO.	QUANTITY THIS DWG.	DESCRIPTION	MATERIAL SPECIFICATION
	–	–	49.875" O.D. CYLINDER	

CLASS 260 = 10 GA. (447)
CLASS 320 = 8 GA. (446)

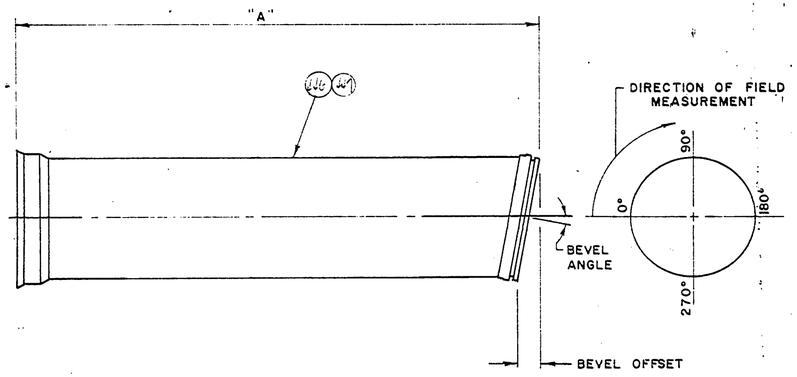

P.C. NO.	CUT SECT.	CLASS	"A"	BEVEL ANGLE	BEVEL OFFSET	F.T. LOCATION ANGULAR	F.T. LOCATION CIRCUM.	REF. SHT.
605	–	260	41'-3.25"	1°57'	1.70	270	–	–
606	–	260	41'-3.25"	1°25'	1.23	0	–	–
607	–	260	41'-3.25"	4°49'	4.20	0	–	–
626	–	260	41'-3.25"	4°09'	3.62	90	–	–
~~636~~	~~–~~	~~260~~	~~41'-3.25"~~	~~5°00'~~	~~4.36~~	~~90~~	~~–~~	~~–~~
654	–	320	41'-3.25"	4°58'	4.33	90	–	–
671	–	320	41'-3.25"	1°27'	1.26	270	–	–
687	–	320	41'-3.25"	2°04'	1.80	90	–	–
698	–	320	41'-3.25"	1°22'	1.19	90	–	4F23
702	–	320	41'-3.25"	4°03'	3.53	270	–	–
728	–	320	41'-3.25"	2°23'	2.08	90	–	–
732	–	320	41'-3.25"	5°00'	4.36	90	–	–
733	–	260	41'-3.25"	2°00'	1.74	90	–	–
736	–	260	41'-3.25"	4°36'	4.01	90	–	4F23
~~747~~	~~–~~	~~260~~	~~41'-3.25"~~	~~5°00'~~	~~4.36~~	~~90~~	~~–~~	~~–~~
750	–	260	41'-3.25"	2°15'	1.96	90	–	–
755	–	260	41'-3.25"	1°28'	1.28	90	–	–
766	–	260	41'-3.25"	2°16'	1.97	90	–	4F23
769	–	260	41'-3.25"	1°48'	1.57	270	–	–
777	–	260	41'-3.25"	1°23'	1.20	90	–	–

Ameron PIPE PRODUCTS GROUP

RUSSIAN RIVER - CONTRACT #1

CHANGE ORDERS	SYMBOL	REVISION	DATE	BY	APPV'D

UNLESS OTHERWISE SPECIFIED DIMENSIONS ARE IN INCHES
TOLERANCES
FRACT X XX XXX ANGLE
DWG. SCALE

DRAWN KW 1-6-76
CHECKED
APPV'D

2314 4F3.0.

60-4-102.128.94

SEAL	ITEM NO.	QUANTITY REQUIRED	DESCRIPTION	MATERIAL SPECIFICATION
	47	—	49.875" O.D. CYLINDER	

CLASS 200 = 10KA

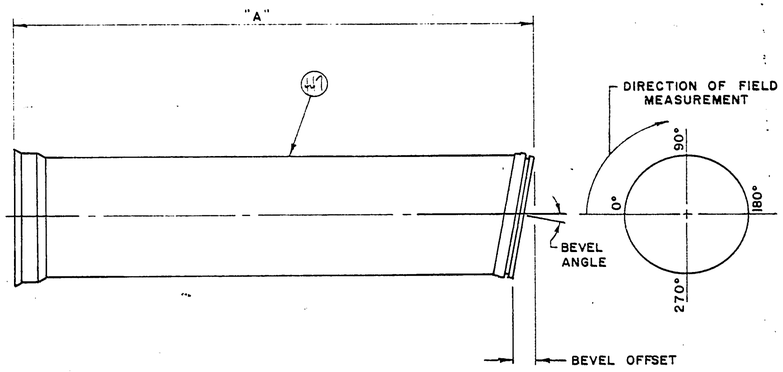

PC. NO.	CUT SECT.	CLASS	"A"	BEVEL ANGLE	BEVEL OFFSET	F.T. LOCATION ANGULAR	F.T. LOCATION CIRCUM.	REF. SHT.
781	—	200	41'-3.25"	1°31'	1.32	90	—	—
784	—	200	41'-3.25"	2°24'	2.09	270	—	—
791	—	200	41'-3.25"	3°52'	3.37	180	—	—
825	—	200	41'-3.25"	1°35'	1.38	90	—	—
833	—	200	41'-3.25"	1°49'	1.58	270	—	—
847	—	200	41'-3.25"	1°33'	1.35	90	—	—

CHANGE ORDERS	SYMBOL	REVISION	DATE	BY	APPV'D

UNLESS OTHERWISE SPECIFIED DIMENSIONS ARE IN INCHES

TOLERANCES

FRACT	.X	.XX	.XXX	ANGLE
±	±	±	±	±

DWG SCALE

Ameron PIPE PRODUCTS GROUP

RUSSIAN RIVER - CONTRACT #1

DRAWN	LW	1-6-70
CHECKED		
APPV'D		

2314 HH.0

60-4-102.128.95

4F5

FLAG	ITEM NO	QUANTITY THIS DWG	DESCRIPTION	MATERIAL SPECIFICATION
	446	—	49.875" O.D. CYLINDERS (8GA)	

STANDARD SECTIONS w/ CUT SPIGOT (SEE 20 SHT)

	PC. NO.	LAYOUT REF.	PC. NO.	LAYOUT REF.	PC. NO.	LAYOUT REF.
CLASS 320	675 ✓	4L9				

CHANGE ORDERS	SYMBOL	REVISION	DATE	BY	APPV'D

UNLESS OTHERWISE SPECIFIED DIMENSIONS ARE IN INCHES

TOLERANCES

FRACT.	.X	XX	.XXX	ANGLE
±	±	±	±	±

DWG. SCALE

Ameron PIPE PRODUCTS GROUP

RUSSIAN RIVER - CONTRACT #

DRAWN	VW	1-8-76
CHECKED		
APPV'D.		

2314 4F5.0

60-4-102.128.96

1000 1000 (8/70)

I-CUT

4F6

FLAG	ITEM NO	QUANTITY THIS DWG.	DESCRIPTION	MATERIAL SPECIFICATION
	441	41'-2"	49.875" O.D. x 1/4" R CYL.	

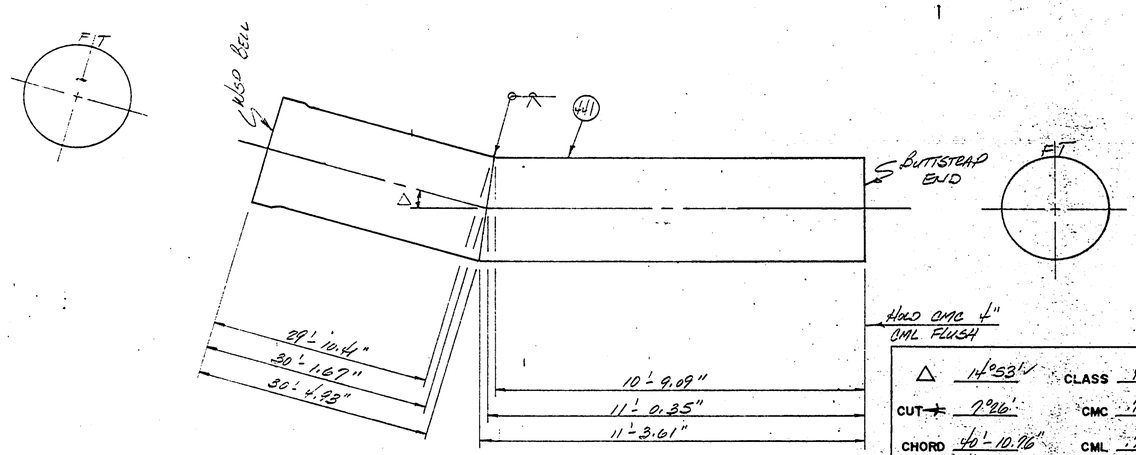

△	14°53'	CLASS	480
CUT	7°26'	CMC	.75
CHORD	40'-10.76"	CML	.75

549
441

Pipe Special

Ameron PIPE PRODUCTS GROUP

RUSSIAN RIVER - CONTRACT #1

CHANGE ORDERS	SYMBOL	REVISION	DATE	BY	APPV'D.

UNLESS OTHERWISE SPECIFIED DIMENSIONS ARE IN INCHES

TOLERANCES

FRACT.	X	XX	XXX	ANGLE
±	±	±	±	±

DWG. SCALE

DRAWN	KW	1-6-75
CHECKED		
APPV'D.		

2314 4F6.0

60-4-102.128.97

T-CUT TAB

4F1

FLAG	ITEM NO	QUANTITY THIS DWG	DESCRIPTION		MATERIAL SPECIFICATION
	41	16'-0"	49.875" O.D. x 14" R CYL.	CLASS 180	
	42	41'-2"	49.875" O.D. x 4GA. CYL.	CLASS 140	
	44	123'-6"	49.875" O.D. x 8GA. CYL.	CLASS 320	
	45	82'-4"	49.875" O.D. x 10GA. CYL.	CLASS 260	

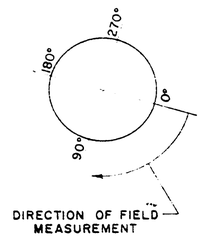

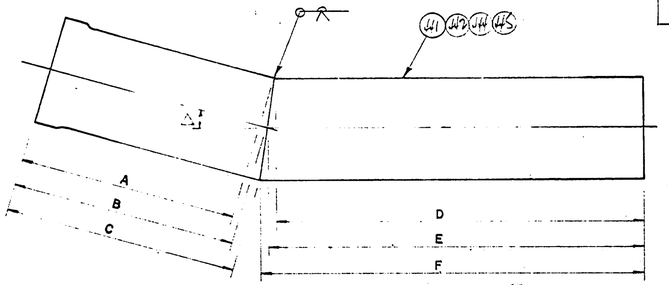

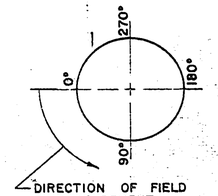

PC. NO.	CUT SECT.	CLASS	CMC	CML	△	CUT ∢	A	B	C	D	E	F	CHORD	F.T. LOCATION SPIGOT END ANGULAR	F.T. LOCATION SPIGOT END CIRCUM.	O.D. CYLINDER BELL END ANGULAR	O.D. CYLINDER BELL END CIRCUM.
550'	11	180 ✓	.75	.75	14°47' ✓	7°23'	10'-2.87"	10'-6.11"	10'-9.35"	5'-2.59"	5'-5.83"	5'-9.07"	15'-10.50"	90	–	90	–
558'	–	140 ✓	.75	.75	12°41' ✓	6°20'	9'-9.23"	10'-0"	10'-2.77"	30'-11.23"	31'-2"	31'-4.77"	40'-11.78"	179°33'	98.15"	179°33'	98.15"
572' ✓	–	320 ✓	.75	.75	16°26' ✓	8°13'	6'-4.32"	6'-7.92"	6'-11.52"	34'-2.48"	34'-6.08"	34'-9.68"	40'-11.26"	0	–	0	–
586' ✓	–	220 ✓	.75	.75	9°55' ✓	4°58'	30'-7.75"	30'-9.84"	30'-11.93"	10'-8.07"	10'-6.16"	10'-6.25"	41'-0.90"	180	–	180	–
592' ✓	–	260 ✓	.75	.75	07°20' ✓	12°41'	8'-6.55"	9'-0.92	9'-6.99"	31'-7.77"	32'-1.84	32'-7.91"	40'-5.16"	177°45'	97.36"	176°42'	96.91"
629' ✓	–	260 ✓	.75	.75	11°19' ✓	5°40'	28'-4.13"	28'-6.60	28'-9.07"	12'-4.93"	12'-7.40	12'-9.87"	40'-11.95"	180	–	180	–
659' ✓	–	320 ✓	.75	.75	20°08' ✓	10°04'	13'-6.55"	13'-10.98	14'-3.41	26'-10.59	27'-3.02	27'-7.45"	40'-9.20"	270	–	270	–

CHANGE ORDERS	SYMBOL	REVISION	DATE	BY	APPV'D.

UNLESS OTHERWISE SPECIFIED DIMENSIONS ARE IN INCHES
TOLERANCES

FRACT	.X	XX	.XXX	ANGLE
±	±	±	±	±

DWG. SCALE

Ameron PIPE PRODUCTS GROUP

RUSSIAN RIVER – CONTRACT #1

DRAWN	JW	1-6-75
CHECKED		
APPV'D.		

2314 4F1.0

60-4-102.128.98

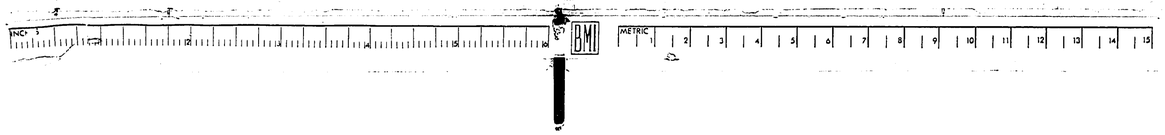

4F8

FLAG	ITEM NO	QUANTITY THIS DWG	DESCRIPTION	MATERIAL SPECIFICATION
	441	41'-2"	49.875" O.D. x 1/4" R CML.	
	434	1	1/4" PIPE PLUG.	

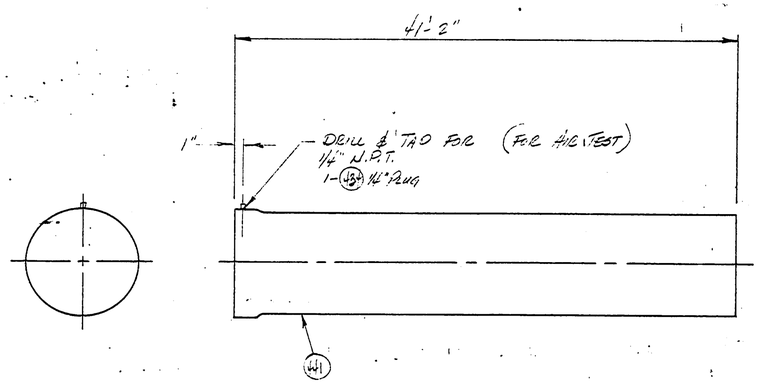

CLASS 480
CMC .75
CML .75
551
4L1

Ameron PIPE PRODUCTS GROUP

Russian River - Contract #1

CHANGE ORDERS	SYMBOL	REVISION	DATE	BY	APPV'D.

UNLESS OTHERWISE SPECIFIED DIMENSIONS ARE IN INCHES

TOLERANCES

FRACT	.X	XX	.XXX	ANGLE
±	±	±	±	±

DWG. SCALE

DRAWN	KW	1-9-76
CHECKED		
APPV'D.		

60-4-102.128.99

2314 4F8.0

4F9

FLAG	ITEM NO	QUANTITY THIS DWG.	DESCRIPTION	MATERIAL SPECIFICATION
	441	22'-1.69"	49.875" O.D. x 1/4" R CYL.	
	48	1	48" CL. "D" SKIRTED FLG. SEE SHT. 4B1	5/16 R

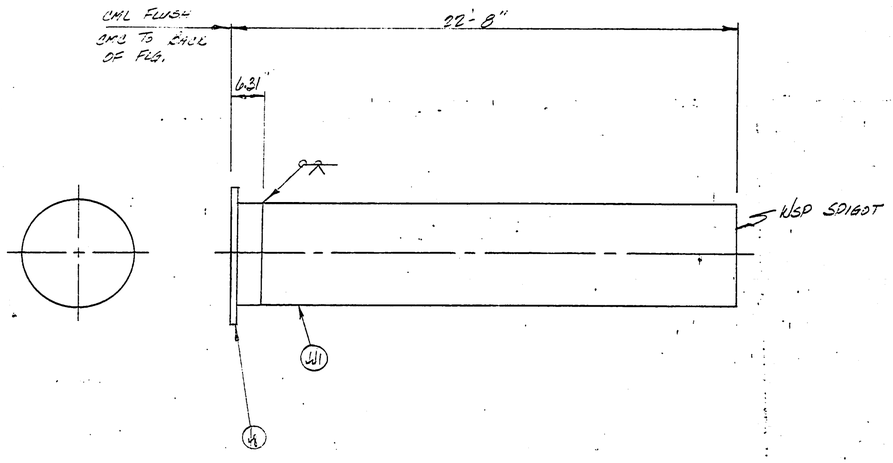

CLASS 480 ✓
CMC .75
CML .75
CS# 23

553A
4U

Ameron PIPE PRODUCTS GROUP

RUSSIAN RIVER - CONTRACT #1

CHANGE ORDERS	SYMBOL	REVISION	DATE	BY	APPV'D

UNLESS OTHERWISE SPECIFIED DIMENSIONS ARE IN INCHES

TOLERANCES

FRACT	.X	XX	.XXX	ANGLE
±	±	±	±	±

DWG. SCALE

DRAWN	KW	1-7-76
CHECKED		
APPV'D.		

2314 4F9.0

60-4-102.128.100

4F10

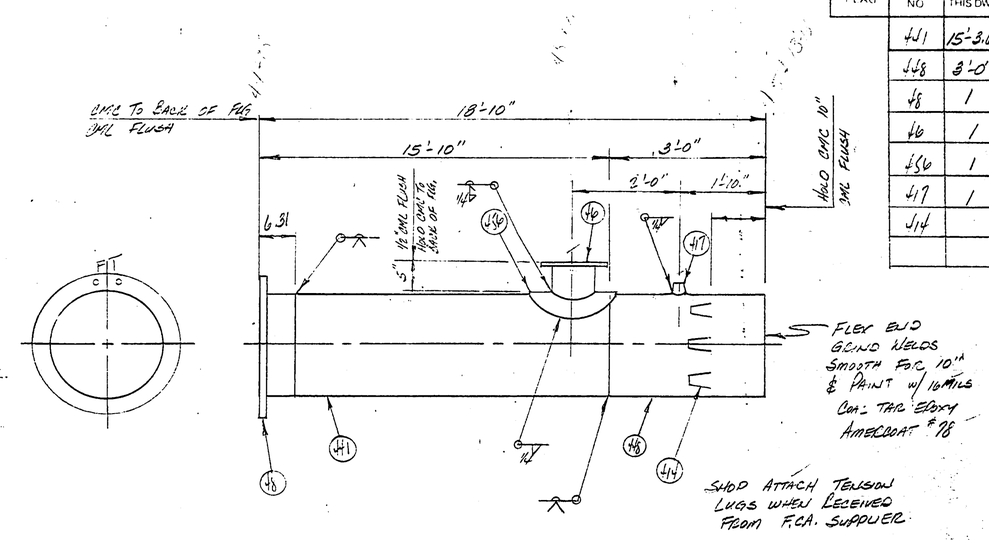

FLAG	ITEM NO	QUANTITY THIS DWG	DESCRIPTION	MATERIAL SPECIFICATION
	441	15'-3.69	49.875" O.D. x 14" R CYL.	
	448	3'-0"	49.875" O.D. x 3/8" R CYL.	ASTM A 283 GR C
	48	1	48" CL. "D" SKIRTED FLG. SEE SHT 4B1	5/16 R
	46	1	SPEC 18" SKIRTED FLG. SEE SHT 4B1	
	456	1	3/8" R x 38.25" O.D. COLLAR ROLL TO 24.94" R	ASTM A 283 GR C
	417	1	2" x 3000# THREADOLET	
	414		43" TENSION LUGS PART OF 48" F.C.A.	

CLASS 480
CMC 75
CML 75
CS# 23
554
441

Ameron PIPE PRODUCTS GROUP

RUSSIAN RIVER - CONTRACT #1

CHANGE ORDERS	SYMBOL	REVISION	DATE	BY	APPV'D

UNLESS OTHERWISE SPECIFIED DIMENSIONS ARE IN INCHES

TOLERANCES

FRACT	.X	.XX	.XXX	ANGLE
±	±	±	±	±

DWG. SCALE

DRAWN	KW	1-8-76
CHECKED		
APPV'D		

2314 4F10.0

60-4-102.128.101

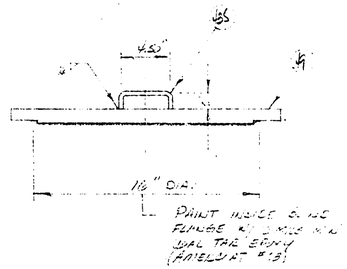

FLAG	ITEM NO	QUANTITY THIS DWG	DESCRIPTION	MATERIAL SPECIFICATION
		49	15" SPEC. BLIND FLG. SEE SHT 48V	
		435	1/2 ϕ COD HANDLES	

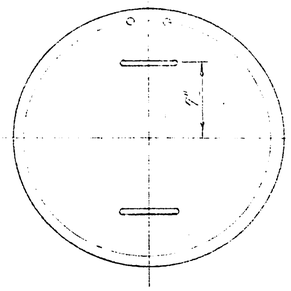

P. No.	LAYING LENGTH
554A ✓	41

CHANGE ORDERS	SYMBOL	REVISION	DATE	BY	APPV'D.

UNLESS OTHERWISE SPECIFIED DIMENSIONS ARE IN INCHES
TOLERANCES

FRACT.	.X	.XX	.XXX	ANGLE
±	±	±	±	±

DWG. SCALE

Ameron PIPE PRODUCTS GROUP

RUSSIAN RIVER – CONTRACT #1

DRAWN	LW	1-9-96
CHECKED		
APPV'D.		

2314 4F11.0

60-4-102.128.102

1000 1000 (8.70)

2-CUT

4F12

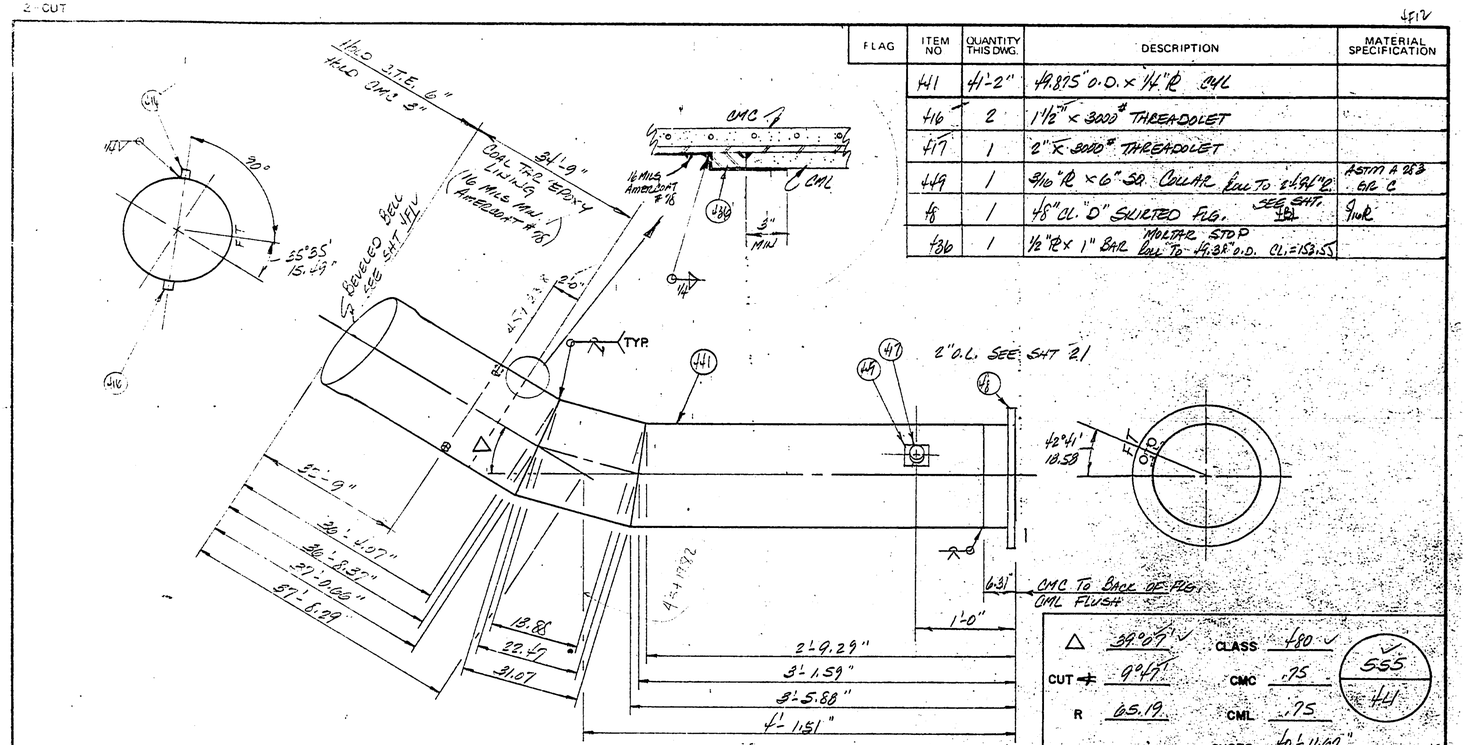

FLAG	ITEM NO	QUANTITY THIS DWG.	DESCRIPTION	MATERIAL SPECIFICATION
	441	41'-2"	49.875" O.D. × 1/4" R CML	
	416	2	1 1/2" × 3000# THREADOLET	
	417	1	2" × 3000# THREADOLET	
	449	1	3/16" R × 6" SQ. COLLAR Roll To 24.94" R	ASTM A 283 GR C
	48	1	48" CL. "D" SKIRTED FLG. SEE SHT. 4B1	9/16 R
	436	1	1/2" R × 1" BAR MORTAR STOP Roll To 49.38" O.D. CL.=153.55	

△ 39°07' ✓ CLASS 480 ✓

CUT ⊄ 9°47' CMC .75

R 65.19 CML .75

CHORD 40'-11.69"

555 / 441

special

Ameron PIPE PRODUCTS GROUP

RUSSIAN RIVER - CONTRACT #1

CHANGE ORDERS	SYMBOL	REVISION	DATE	BY	APPV'D.

UNLESS OTHERWISE SPECIFIED DIMENSIONS ARE IN INCHES

TOLERANCES

FRACT.	.X	XX	.XXX	ANGLE
±	±	±	±	±

DWG. SCALE

DRAWN	KW	1-7-76
CHECKED		
APPV'D.		

2314 4E12.0

60-4-102.128.103

↓F13

FLAG	ITEM NO	QUANTITY THIS DWG	DESCRIPTION	MATERIAL SPECIFICATION
	44	41'-2"	49.875" O.D. X 44A CYL.	

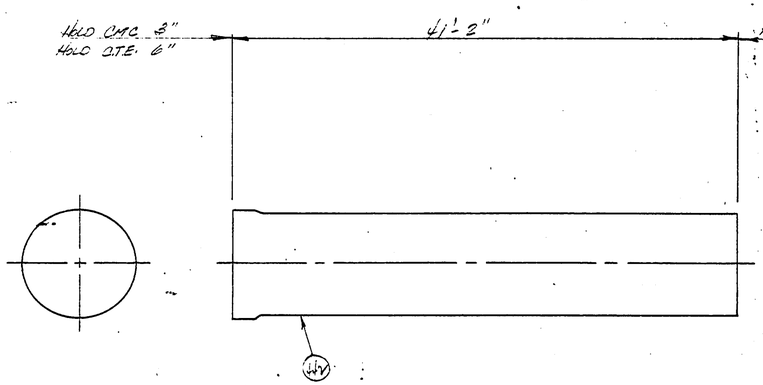

CLASS 440 ✓
CMC .75
LINING CML COAL TAR EPOXY
16 MILS. MIN.
AMERCOAT #78

556
41.2

Ameron PIPE PRODUCTS GROUP

RUSSIAN RIVER - CONTRACT #1

CHANGE ORDERS	SYMBOL	REVISION	DATE	BY	APPV'D.

UNLESS OTHERWISE SPECIFIED DIMENSIONS ARE IN INCHES
TOLERANCES
FRACT. ± | .X ± . | XX ± | XXX ± | ANGLE ± °

DWG. SCALE

DRAWN	KW	1-7-76
CHECKED		
APPV'D.		

2314 413.0

60-4-102.128.104

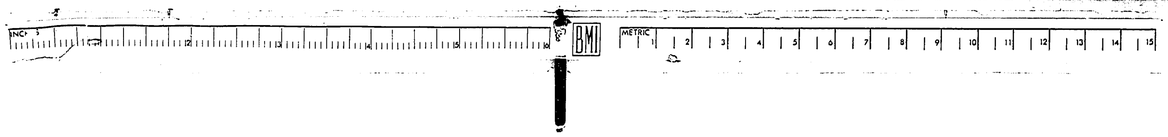

1-CUT

4F14

FLAG	ITEM NO	QUANTITY THIS DWG	DESCRIPTION	MATERIAL SPECIFICATION
	239	9'-5.69"	49.875" O.D. x 1/4" R CYL.	
	436	1	1/2" R x 1" BAR MORTAR STOP COLL TO 49.38" O.D. C.L. 153.55	

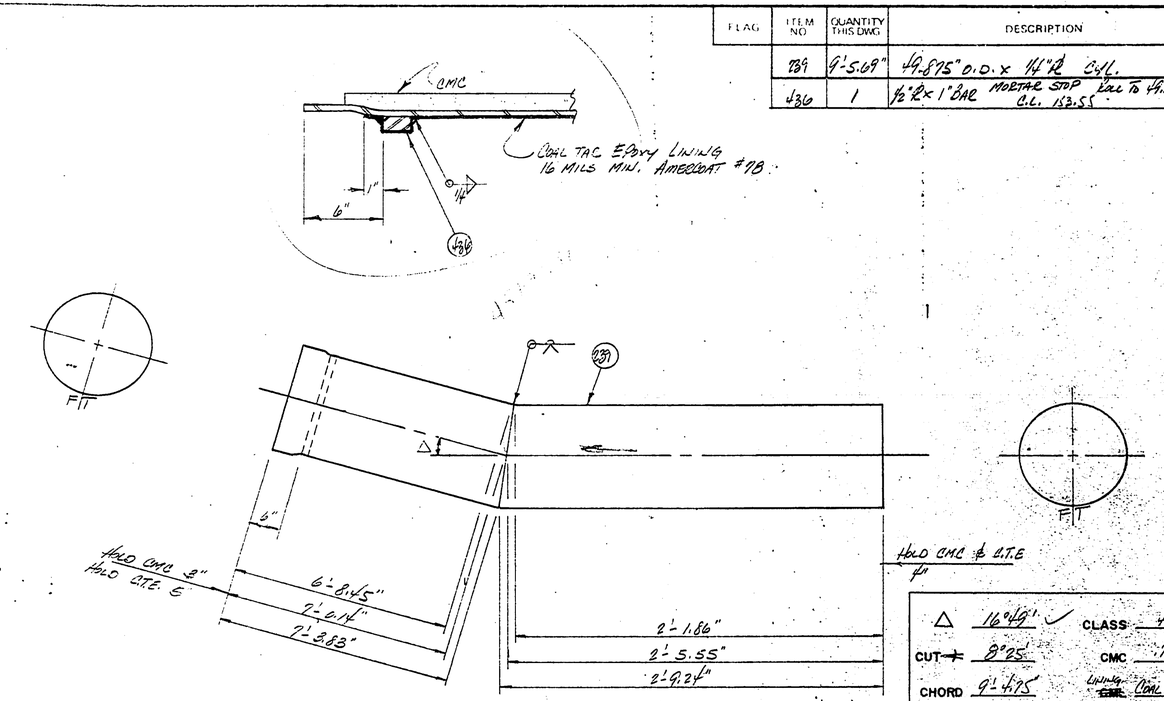

△ 16°49' ✓ CLASS 480 ✓

CUT ⊣ 8°25' CMC .75

CHORD 9'-4.75 LINING COAL TAR EPOXY AMERCOAT #78 16 MILS MIN.

CUT, SCH. 13

557 ✓ 4L2

Ameron PIPE PRODUCTS GROUP

RUSSIAN RIVER - CONTRACT #1

CHANGE ORDERS	SYMBOL	REVISION	DATE	BY	APPV'D

UNLESS OTHERWISE SPECIFIED DIMENSIONS ARE IN INCHES

TOLERANCES

FRACT.	X	XX	XXX	ANGLE
±	±	±	±	±

DWG. SCALE

DRAWN	KW	1-7-76
CHECKED		
APPV'D.		

2314 4F14.0

60-4-102.128.105

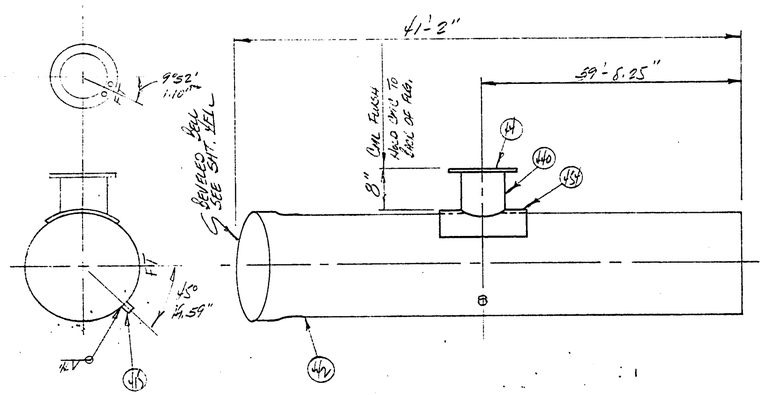

FLAG	ITEM NO.	QUANTITY THIS DWG	DESCRIPTION	MATERIAL SPECIFICATION
	442	41'-2"	49.875" O.D. x 4GA. CYL.	
	44	1	12" x 150# SLIP-ON FLG. F.F.	
	440	10"	12" SCH. 20 STEEL PIPE	
	454	1	5/16" R x 24" SQ COLLAR ROLL TO 24.94" R.	ASTM A 283 GRC
	415	1	1/2" x 3000# THREADOLET	

CLASS 440 ✓
CMC .75
CML .75 .31" for O.L.
501 ✓
442

Ameron PIPE PRODUCTS GROUP

Russian River – Contract #1

CHANGE ORDERS	SYMBOL	REVISION	DATE	BY	APPV'D.

UNLESS OTHERWISE SPECIFIED DIMENSIONS ARE IN INCHES
TOLERANCES

FRACT	X	XX	XXX	ANGLE
±	±	±	±	±

DWG SCALE

DRAWN	LW	1-8-76
CHECKED		
APPV'D.		

2314 4F15.0

60-4-102.128.106

1-CUT

4F16

FLAG	ITEM NO	QUANTITY THIS DWG	DESCRIPTION	MATERIAL SPECIFICATION
	444	41'-2"	49.875" O.D. x 8GA CYL.	
	417	1	2" x 3000# THREADOLET	
	449	1	3/16" PL x 6" SQ COLLAR ROLL TO 24.94" R	ASTM A283 GRC

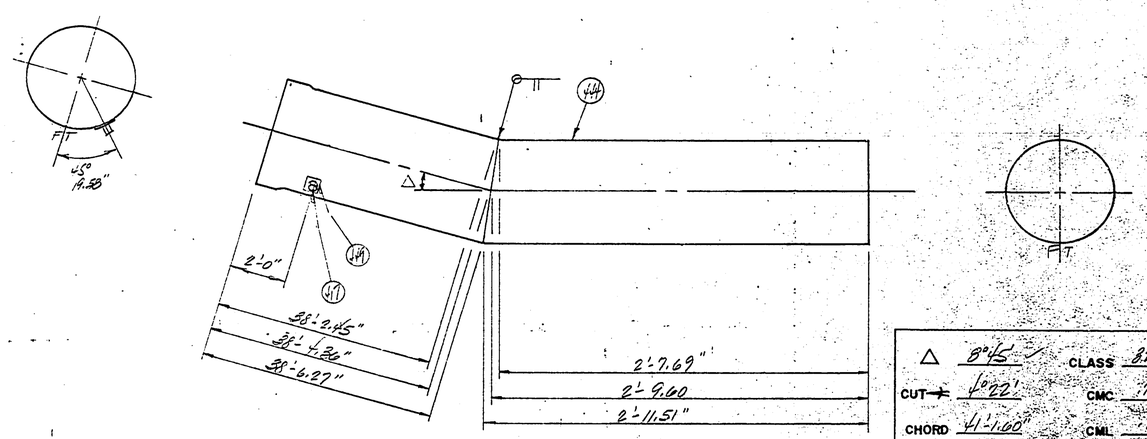

△ 8°45' CLASS 820

CUT 4°22' CMC .75

CHORD 41'-1.60" CML .75

569

463

Ameron PIPE PRODUCTS GROUP

RUSSIAN RIVER - CONTRACT #1

CHANGE ORDERS	SYMBOL	REVISION	DATE	BY	APPV'D.

UNLESS OTHERWISE SPECIFIED DIMENSIONS ARE IN INCHES

TOLERANCES

FRACT.	X	XX	XXX	ANGLE
±	±	±	±	±

DWG. SCALE

DRAWN	KW	1-8-76
CHECKED		
APPV'D.		

2314 4F16.0

60-4-102.128.107

INCH 3 BMI METRIC 1 2 3 4 5 6 7 8 9 10 11 12 13 14 15

4F17

FLAG	ITEM NO	QUANTITY THIS DWG	DESCRIPTION	MATERIAL SPECIFICATION
	444 445	123'	49.875" O.D. CYLINDER	
	417	3	2" x 3000# THREDOLET	
	449	3	3/16" PL x 6" SQ COLLAR ROLL TO 24.94"	ASTM A283 GRC

CLASS 320 = 8GA (444)
260 = 10GA (445)

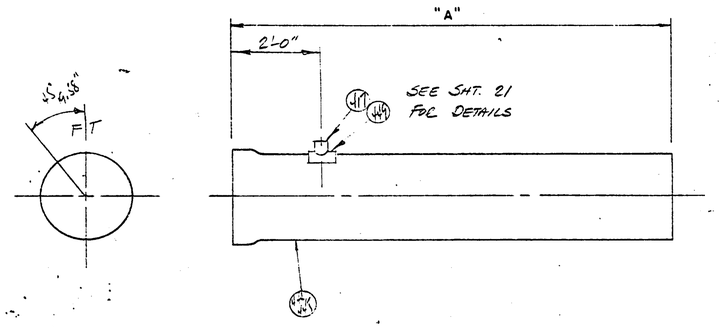

PC. NO.	CUT SECT.	CLASS	"A"			REF. SHT.
574 ✓	–	320 ✓	41'-2"			4F1
587 ✓	–	320 ✓	41'-2"			–
594 ✓	–	260 ✓	41'-2"			4F1

CHANGE ORDERS	SYMBOL	REVISION	DATE	BY	APPV'D

UNLESS OTHERWISE SPECIFIED DIMENSIONS ARE IN INCHES
TOLERANCES
FRACT ± | .X ± | .XX ± | .XXX ± | ANGLE ±
DWG SCALE

Ameron PIPE PRODUCTS GROUP

RUSSIAN RIVER - CONTRACT #1

DRAWN KW 1-9-76
CHECKED
APPV'D

2314 4F17.0

60-4-102.128.108

FLAG	ITEM NO.	QUANTITY THIS DWG.	DESCRIPTION	MATERIAL SPECIFICATION
	44	123'	49.875" O.D. x 8GA. CYL.	
	45	3	18"24."O" SKIRTED FLG. SEE 34T FB1	
	455	3	14"R x 38.25" O.D. COLLAR Roll To 24.94"R.	ASTM A 283 Gr. C

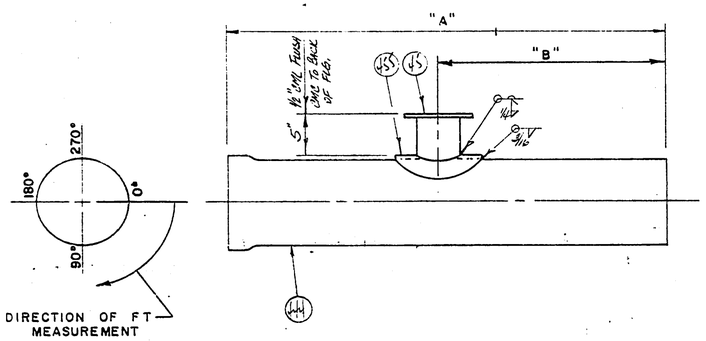

PC. NO.	CUT SECT.	CLASS	"A"	"B"	F.T. LOCATION ANGULAR	F.T. LOCATION CIRCUM.	REF. SHT.
580 ✓	—	320 ✓	41±2"	12±7.04"	270	—	—
599 ✓	—	260 ✓	41±2"	16±2.84"	270	—	—
855 ✓	—	320 ✓	41±2"	13±10.98	270	—	—

CHANGE ORDERS	SYMBOL	REVISION	DATE	BY	APPV'D

UNLESS OTHERWISE SPECIFIED DIMENSIONS ARE IN INCHES
TOLERANCES

FRACT	.X	.XX	.XXX	ANGLE
±	±	±	±	±

DWG. SCALE

Ameron PIPE PRODUCTS GROUP

RUSSIAN RIVER - CONTRACT #1

DRAWN	LW	1-9-76
CHECKED		
APPV'D		

2314 4FI8.0

60-4-102.128.109

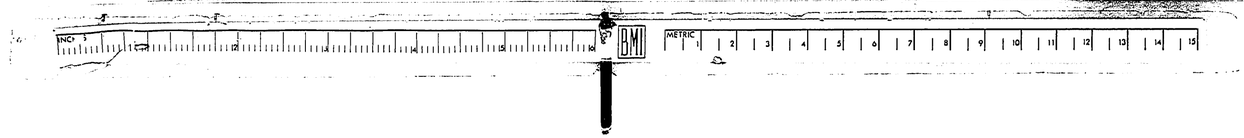

4F19

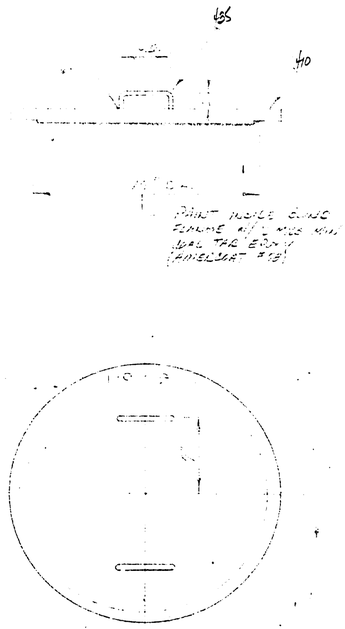

FLAG	ITEM NO	QUANTITY THIS DWG	DESCRIPTION	MATERIAL SPECIFICATION
	410	5	15" O.D. BLIND FLG. SEE SHT 4B2	
	435	15' =	1/2" Ø ROD HANDLES	

Pc. No.	LAYOUT REF.
580A ✓	4L3
801A ✓	4L16
838A ✓	4L18
853A ✓	4L19
855A ✓	4L19

SHT. 4F20 DELETED

Ameron PIPE PRODUCTS GROUP

RUSSIAN RIVER – CONTRACT # 1

CHANGE ORDERS	SYMBOL	REVISION	DATE	BY	APPV'D.

UNLESS OTHERWISE SPECIFIED DIMENSIONS ARE IN INCHES

TOLERANCES

FRACT.	.X	.XX	.XXX	ANGLE
±	±	±	±	±

DWG. SCALE

DRAWN	KW	1-9-76
CHECKED		
APPV'D.		

2314 4F19.0

60-4-102.128.110

1000 1000 (8 70)

4F21

FLAG	ITEM NO.	QUANTITY THIS DWG.	DESCRIPTION	MATERIAL SPECIFICATION
	439	7'-3.72"	10" SCH. 20 STEEL PIPE	
	43	3	10" x 150# SLIP-ON FLG. F.F.	
	411	3	18" CL "D" BLIND FLG. W/ 10.81" I.D HOLE SEE SHT. 4B3	

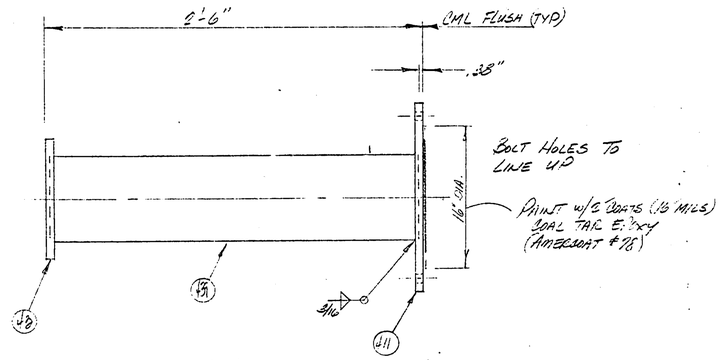

1/4"

$f_s = \frac{5.112}{1/4} = 2240$ psi

Pc. No.	LAYOUT REF
599A ✓	4L5
613A ✓	4L6
756A ✓	4L14

EXTERIOR BARE
CML = 1/4"

Special

Ameron PIPE PRODUCTS GROUP

RUSSIAN RIVER - CONTRACT #1

CHANGE ORDERS	SYMBOL	REVISION	DATE	BY	APPV'D.

UNLESS OTHERWISE SPECIFIED DIMENSIONS ARE IN INCHES

TOLERANCES

FRACT.	.X	.XX	.XXX	ANGLE
±	±	±	±	±

DWG. SCALE

DRAWN	LW	1-9-76
CHECKED		
APPV'D.		

2314 4F21.0

60-4-102.128.111

1000 1000 (8-70)

↓F22

FLAG	ITEM NO.	QUANTITY REQ'D.	DESCRIPTION	MATERIAL SPECIFICATION
	–	2½'	49.895" O.D. CYLINDER	

CLASS 320 = 86A (WW)
260 = 10GA (WT)

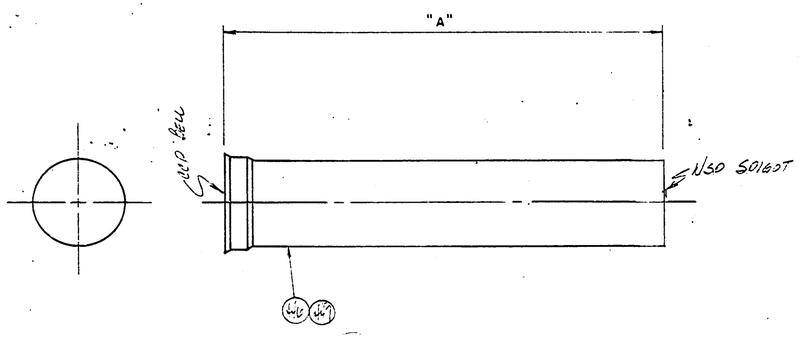

PC. NO.	CUT SECT.	CLASS	"A"			LAYOUT REF. SHT.
604A ✓	–	260 ✓	40'-10.25"			4L5
~~1685~~ ✓		~~260~~ ✓	~~40'-10.85"~~			~~4L7~~
644 ✓	–	320 ✓	40'-10.25"			4L7
696 ✓	–	320 ✓	40'-10.25"			4L10
743 ✓	–	260 ✓	40'-10.25"			4L18
864	–	320	40'-10.25"			4L19

CHANGE ORDERS	SYMBOL	REVISION	DATE	BY	APPV'D.

UNLESS OTHERWISE SPECIFIED DIMENSIONS ARE IN INCHES
TOLERANCES

FRACT	.X	XX	XXX	ANGLE
±	±	±	±	±

DWG. SCALE

Ameron PIPE PRODUCTS GROUP

Russian River - Contract #1

DRAWN LW 4-9-76
CHECKED
APPV'D

2314 4F22.0
60-4-102.128.112

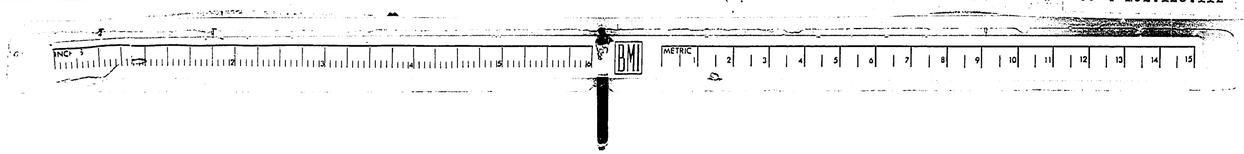

4F23

FLAG	ITEM NO.	QUANTITY	DESCRIPTION	MATERIAL SPECIFICATION
	—	246'	49.875" O.D. CYLINDER	
	45	6	18" CL. "D" SKIRTED FLG. SEE SHT 4B1	
	457	5	3/16" PL x 38.25" O.D. COLLAR ROLL TO 24.94"	ASTM A283 GR C
*	455	1	1/4" PL x 38.25" O.D. COLLAR ROLL TO 24.94"	"

* CLASS 320 = 8GA (446)
CLASS 260 = 10GA (447)

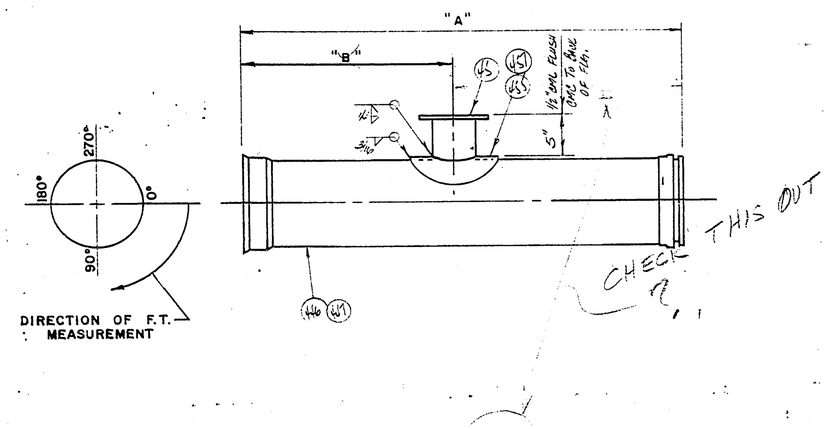

PC. NO.	CUT SECT.	CLASS	"A"	"B"	FT. LOCATION ANGULAR	FT. LOCATION CIRCUM.	REF. SHT.
613 ✓	—	260 ✓	41'-3.25"	?31'-1.57"	270	—	—
* 698 ✓	—	320 ✓	41'-3.25"	?5'-3.25"	270	—	4F3.
736 ✓	—	260 ✓	41'-3.25"	?5'-4.92"	270	—	4F3
756 ✓	—	260 ✓	41'-3.25"	?25'-2.41"	270	—	—
766 ✓	—	260 ✓	41'-3.25"	?5'-3.28"	270	—	4F3
801 ✓	—	260 ✓	41'-3.25"	?36'-2.65"	270	—	—

5
69-50

CHANGE ORDERS	SYMBOL	REVISION	DATE	BY	APPV'D	DWG SCALE

UNLESS OTHERWISE SPECIFIED DIMENSIONS ARE IN INCHES
TOLERANCES
FRACT X XX XXX ANGLE

Ameron PIPE PRODUCTS GROUP

RUSSIAN RIVER - CONTRACT #1

DRAWN KW 1-9-76
CHECKED
APPV'D

2314 4F23.0

60-4-102.128.113

4F24

FLAG	ITEM NO.	QUANTITY THIS DWG	DESCRIPTION	MATERIAL SPECIFICATION
	HS	41'-2"	49.875" O.D. X 10GA. CYL.	
	P2	1	48" M-3516 SPIGOT RING	

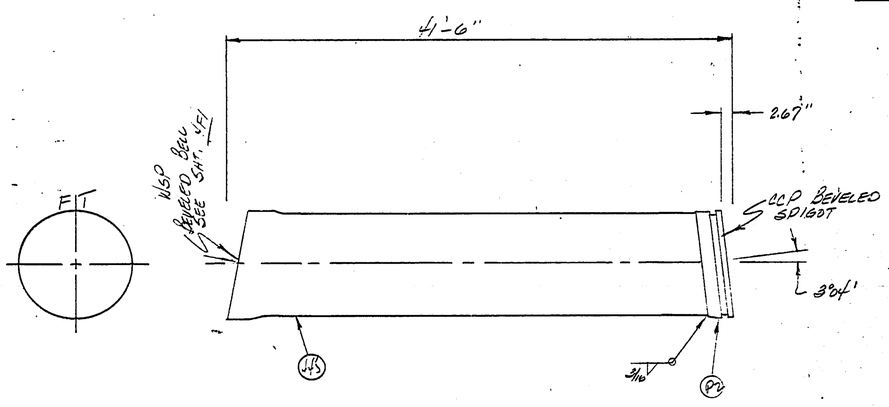

CLASS 260
CMC .75
CML .75

628
4L6

Ameron PIPE PRODUCTS GROUP

RUSSIAN RIVER - CONTRACT #1

CHANGE ORDERS	SYMBOL	REVISION	DATE	BY	APPV'D.

UNLESS OTHERWISE SPECIFIED DIMENSIONS ARE IN INCHES

TOLERANCES

FRACT	.X	XX	.XXX	ANGLE
±	±	±	±	±

DWG. SCALE

DRAWN	KW	1-9-76
CHECKED		
APPV'D		

2314 4F24.0

60-4-102.128.114

1000 1000 (8 70)

3 - CUT

4F25

FLAG	ITEM NO.	QUANTITY THIS DWG.	DESCRIPTION	MATERIAL SPECIFICATION
	45	41'-2"	49.875" O.D. x 10GA. CYL.	
	47	1	2" x 3000# THREADOLET	
	49	1	3/16"R x 6"SA COLLAR Rad To 24.94"R	ASTM A 283 GR C

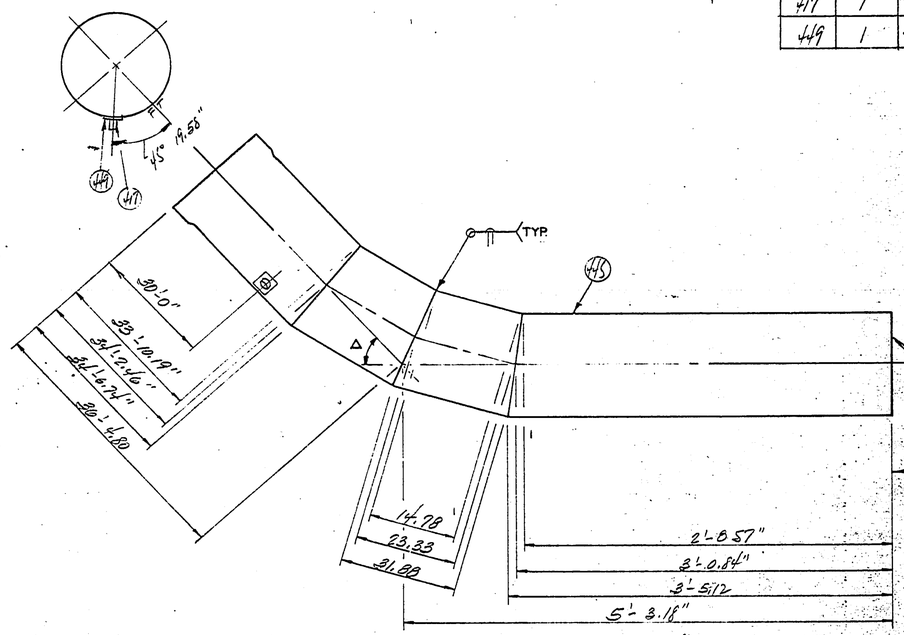

Δ	58°23'	CLASS	200
CUT ±	9°44'	CMC	.15
R	6802	CML	.75
		CHORD	39'-4.37"

632
46

Ameron PIPE PRODUCTS GROUP

Russian River - Contract #1

CHANGE ORDERS	SYMBOL	REVISION	DATE	BY	APPV'D.

UNLESS OTHERWISE SPECIFIED DIMENSIONS ARE IN INCHES
TOLERANCES

FRACT.	.X	.XX	.XXX	ANGLE
±	±	±	±	±

DWG. SCALE

DRAWN	LW	1-8-10	
CHECKED			
APPV'D			

2314

60-4-102.128.115

4FDS-D

I-CUT

4F20

ITEM NO.	QUANTITY	DESCRIPTION	MATERIAL SPECIFICATION
447	41'-3.25"	49.875" O.D. x 10GA. CYL.	
42	1	8" x 150# SLIP-ON FLG. F.F.	
438	10"±	8" SCH. 20 STEEL PIPE	
451	1	3/16"R x 16" SQ COLLAR ROLL TO 24.94"R	ASTM A 283 GRC

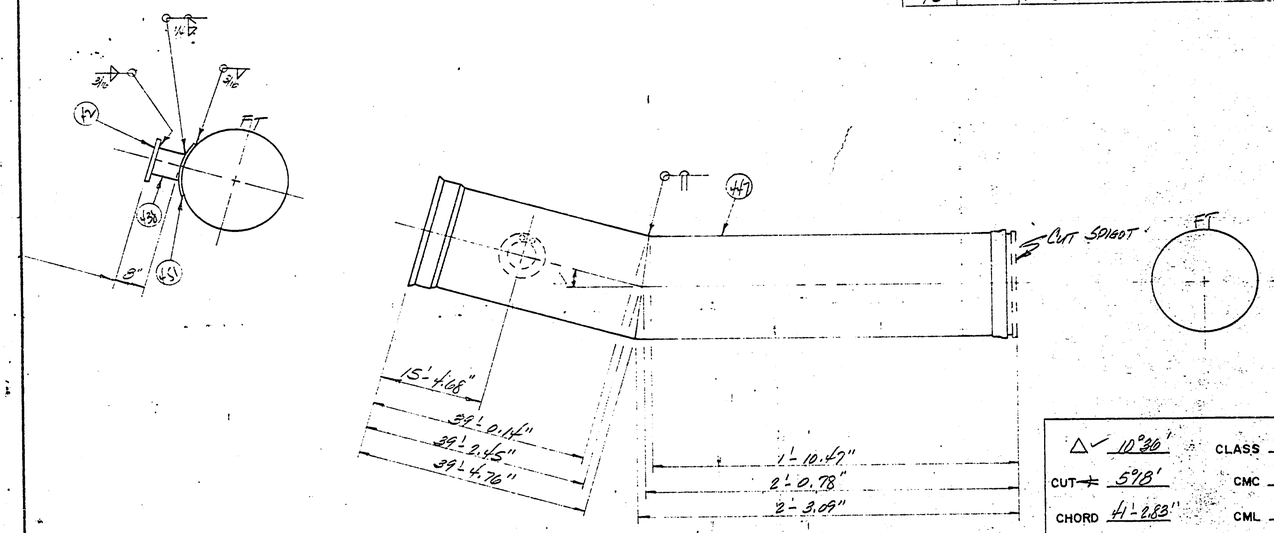

△ 10°36'
CUT ⊥ 5°18'
CHORD 41'-2.83"
CLASS 260
CMC .75
CML .75
637
4L7

Ameron PIPE PRODUCTS GROUP

RUSSIAN RIVER - CONTRACT #1

UNLESS OTHERWISE SPECIFIED DIMENSIONS ARE IN INCHES
TOLERANCES
FRACT X XX XXX ANGLE
DWG SCALE

DRAWN KW 1-9-76
CHECKED
APPV'D

2314

4F26.0

60-4-102.128.116

CHANGE ORDERS	SYMBOL	REVISION	DATE	BY	APPV'D

FLAG	ITEM NO	QUANTITY THIS DWG.	DESCRIPTION	MATERIAL SPECIFICATION
	45	41'-2"	49.875" O.D. X 10GA. C&L	
	P2	1	48" M-3516 SPIGOT RING	

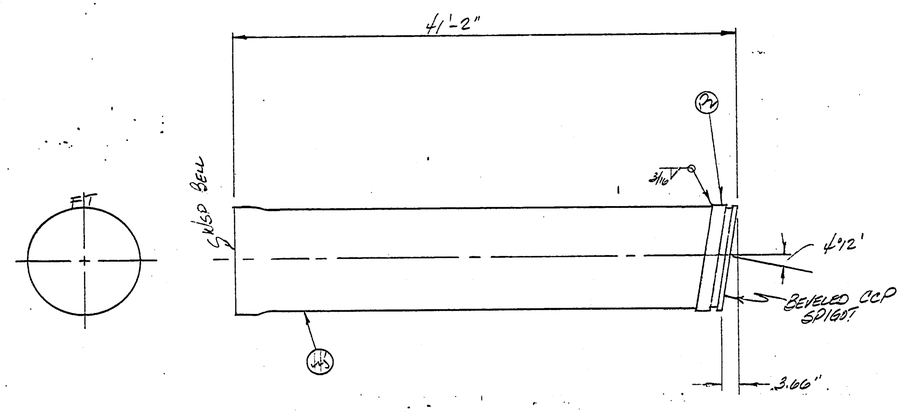

CLASS 260
CMC .75
CML 1.75

638
4L7

CHANGE ORDERS	SYMBOL	REVISION	DATE	BY	APPV'D

UNLESS OTHERWISE SPECIFIED DIMENSIONS ARE IN INCHES
TOLERANCES

FRACT	.X	XX	.XXX	ANGLE
±	±	±	±	±

DWG. SCALE

Ameron PIPE PRODUCTS GROUP

RUSSIAN RIVER - CONTRACT #1

DRAWN	KW	1-9-76
CHECKED		
APPV'D.		

2314 4229.0

60-4-102.128.117

1000-1000 -8-70

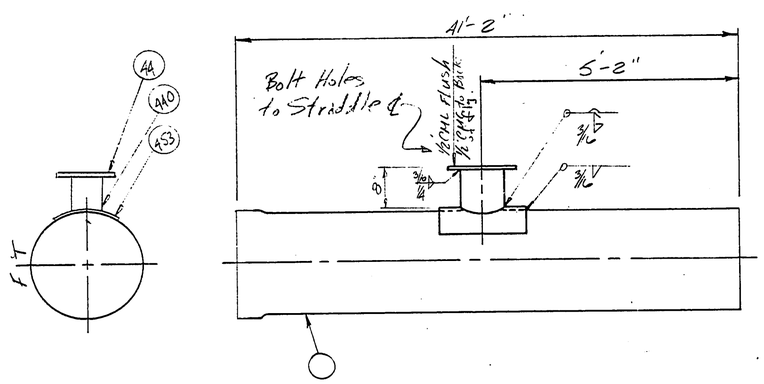

FLAG	ITEM NO	QUANTITY THIS DWG	DESCRIPTION	MATERIAL SPECIFICATION
		40'	49 7/8" OD x 8 gal Cy	
	44	1	12" x 150# Slip ON Flg. F.F.	
	440	10'±	12" Sch 20 Steel Pipe	
	453	1	3/16" ℄ x 24" Sq Collar Roll to 24.96" F	ASTM A283 Gr C

CLASS 320
CMC 3/4
CML 3/4

858
4L19

Ameron PIPE PRODUCTS GROUP

RUSSIAN RIVER - CONTRACT #1

CHANGE ORDERS	SYMBOL	REVISION	DATE	BY	APPV'D

UNLESS OTHERWISE SPECIFIED DIMENSIONS ARE IN INCHES

TOLERANCES

FRACT	X	XX	XXX	ANGLE
±	±	±	±	±

DWG. SCALE

DRAWN	RB	4/9/76
CHECKED		
APPV'D.		

2314 4F27A

60-4-102.128.118

2-CUT

4F28

FLAG	ITEM NO.	QUANTITY THIS DWG.	DESCRIPTION	MATERIAL SPECIFICATION
	444	25'-2"	49.875" O.D. X 8GA. CYL.	
	417	1	2" x 3000# THREADOLET	
	449	1	3/16" PL x 6" SQ. COLLAR ROLL TO 24.94" R	ASTM A283 GR C

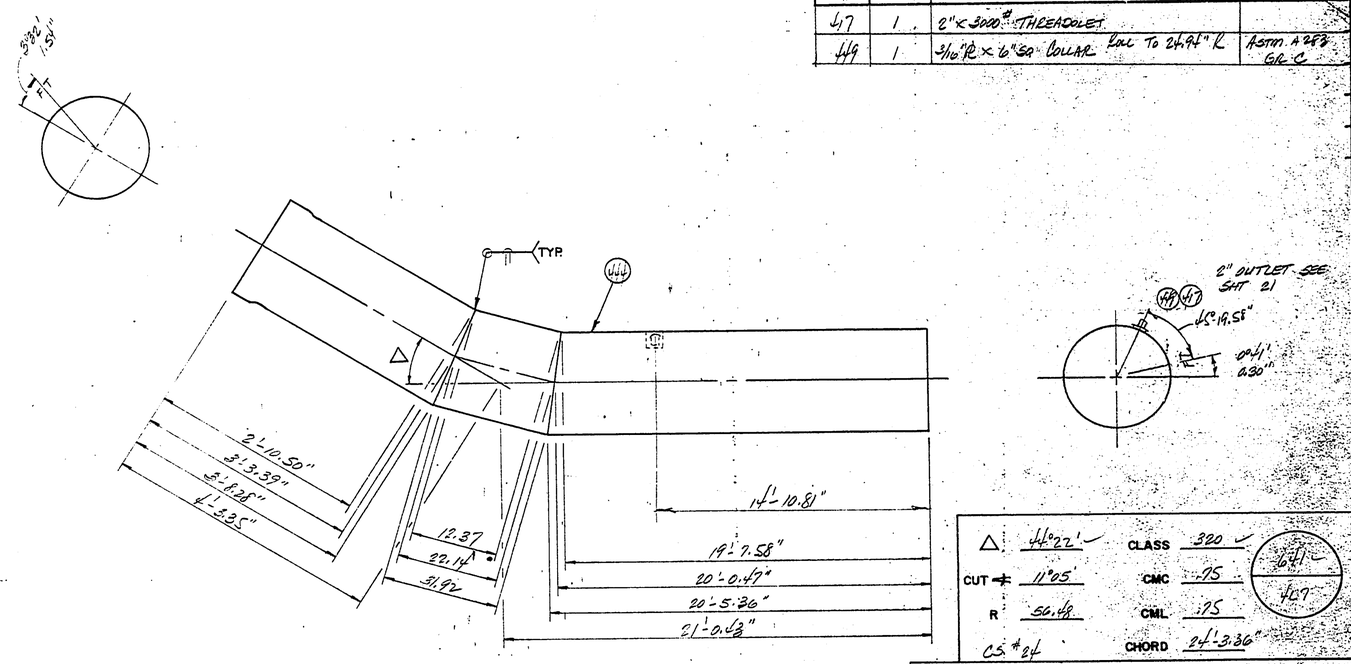

△	44°22'	CLASS	320
CUT ⊄	11°05'	CMC	.75
R	56.48	CML	.75
CS #24		CHORD	24'-3.36"

641
4C7

Ameron PIPE PRODUCTS GROUP

RUSSIAN RIVER - CONTRACT #1

CHANGE ORDERS	SYMBOL	REVISION	DATE	BY	APPV'D.

UNLESS OTHERWISE SPECIFIED DIMENSIONS ARE IN INCHES

TOLERANCES

FRACT.	.X	.XX	.XXX	ANGLE
±	±	±	±	±

DWG. SCALE

DRAWN	KW	1-8-76
CHECKED		
APPV'D.		

2314

4F28.0

60-4-102.128.119

I-CUT

4F29

FLAG	ITEM NO.	QUANTITY THIS DWG.	DESCRIPTION	MATERIAL SPECIFICATION
	444	41'-2"	49.875" O.D. X 8GA CYL	
	417	1	2" x 3000# THREADOLET	
	449	1	3/16" R x 6" SQ COLLAR ROLL TO 24.94" R	ASTM A283 GRC

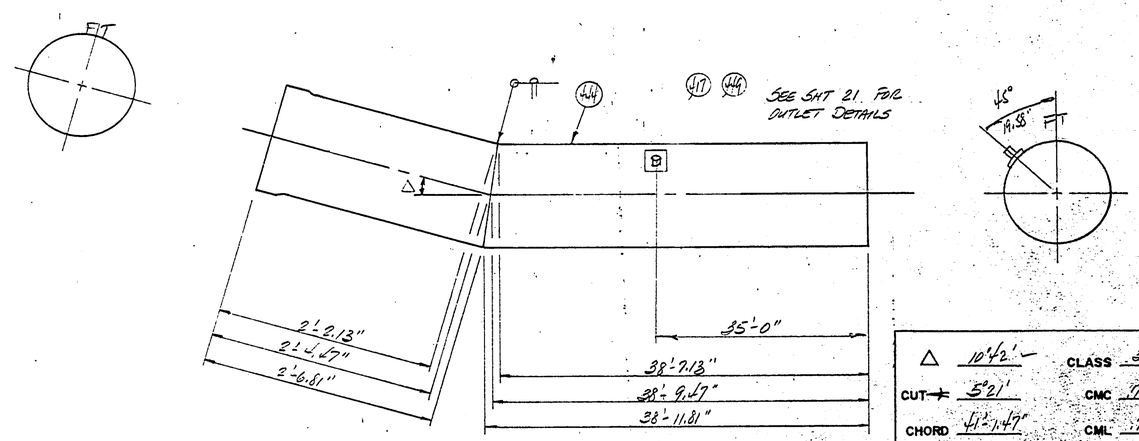

△	10°42'	CLASS	320
CUT	5°21'	CMC	.75
CHORD	41'-1.47"	CML	.75

658 / 448

Ameron PIPE PRODUCTS GROUP

RUSSIAN RIVER - CONTRACT #1

CHANGE ORDERS	SYMBOL	REVISION	DATE	BY	APPV'D.

UNLESS OTHERWISE SPECIFIED DIMENSIONS ARE IN INCHES

TOLERANCES

FRACT.	.X	.XX	.XXX	ANGLE
±	±	±	±	±

DWG. SCALE

DRAWN	JW	1-8-76
CHECKED		
APPV'D.		

2314

60-4-102.128.120

4F29.0

4F30

FLAG	ITEM NO	QUANTITY THIS DWG.	DESCRIPTION	MATERIAL SPECIFICATION
	444	16'-0"	49.875" O.D. x 8 GA. C/L.	
	431	1	1/4" PL x 4" WIDE BUTTSTRAP BELL ROLL TO 49.875" I.D. C.L. = 157.47"	ASTM A283 GRC

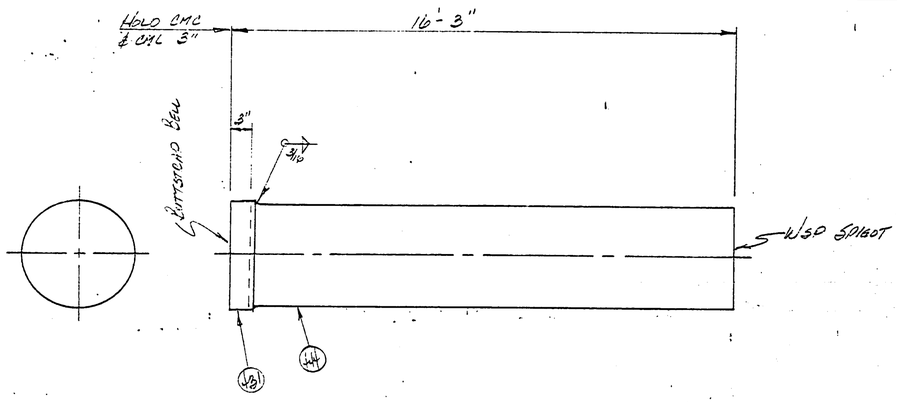

CLASS 320
CMC .75
CML .75
CS# 24

660
4L9

Ameron PIPE PRODUCTS GROUP

RUSSIAN RIVER - CONTRACT #1

CHANGE ORDERS	SYMBOL	REVISION	DATE	BY	APPV'D.

UNLESS OTHERWISE SPECIFIED DIMENSIONS ARE IN INCHES

TOLERANCES

FRACT	.X	.XX	.XXX	ANGLE
±	±	±	±	±

DWG. SCALE

DRAWN	KW	1-9-76
CHECKED		
APPV'D		

2314

4F30.0

60-4-102.128.121

1-CUT"

4F31

FLAG	ITEM NO.	QUANTITY THIS DWG.	DESCRIPTION	MATERIAL SPECIFICATION
	44	41'-2"	49.875" O.D. X BGA CYL.	

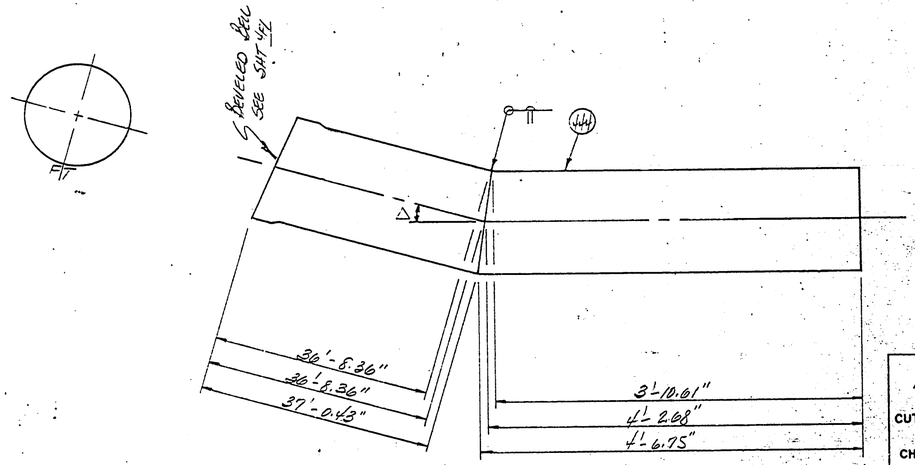

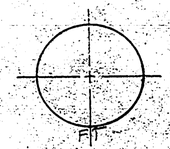

△	18°33'
CUT →	9°16'
CHORD	40'-8.67"
CLASS	320
CMC	.75
CML	.75

661
419

CHANGE ORDERS	SYMBOL	REVISION	DATE	BY	APPV'D.

UNLESS OTHERWISE SPECIFIED DIMENSIONS ARE IN INCHES

TOLERANCES

FRACT.	.X	.XX	.XXX	ANGLE
±	±	±	±	±

DWG. SCALE

Ameron PIPE PRODUCTS GROUP

RUSSIAN RIVER - CONTRACT #1

DRAWN	KW	1-8-76
CHECKED		
APPV'D.		

0314

4F30

60-4-102.128.122

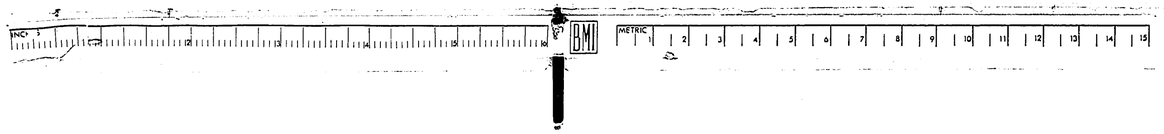

4F32

FLAG	ITEM NO	QUANTITY THIS DWG	DESCRIPTION	MATERIAL SPECIFICATION
	446	40'-10.25"	49.875" O.D. x 8GA CYL.	
	45	1	18" CL. "D" SKIRTED FLG. SEE SHT 4B1	
	456	1	1/4" PL x 38.25" O.D. COLLAR Roll To 24.94" R	ASTM A283 GR C

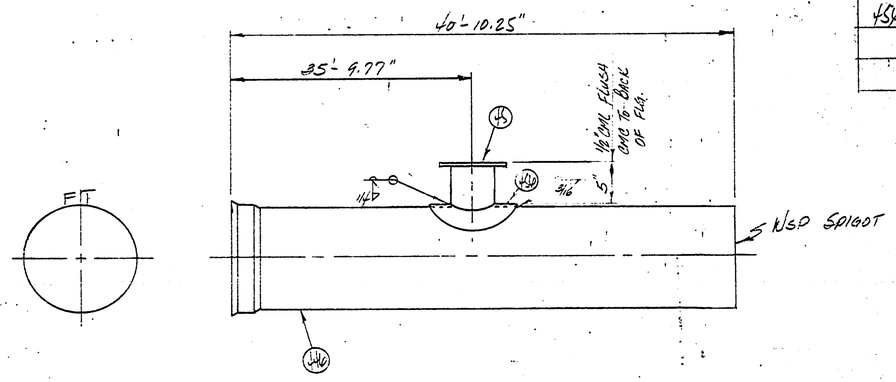

CLASS 320
CMC .75
CML .75
662
4L9

Ameron PIPE PRODUCTS GROUP

RUSSIAN RIVER - CONTRACT # 1

CHANGE ORDERS	SYMBOL	REVISION	DATE	BY	APPV'D

UNLESS OTHERWISE SPECIFIED DIMENSIONS ARE IN INCHES

TOLERANCES

FRACT	X	XX	XXX	ANGLE
±	±	±	±	±

DWG. SCALE

DRAWN	LW	1-9-76
CHECKED		
APPV'D		

2314 4F32.0

60-4-102.128.123

4F33

FLAG	ITEM NO.	QUANTITY THIS DWG.	DESCRIPTION	MATERIAL SPECIFICATION
	412	5	18" BLIND FLG. CL. "D" SEE SHT. 4B4	

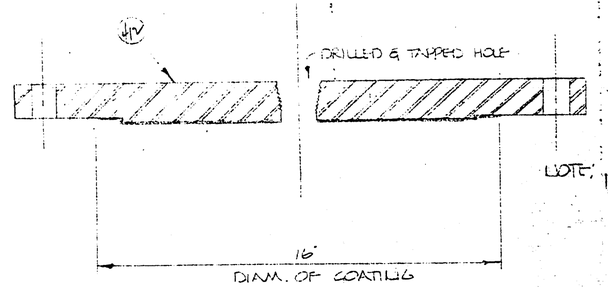

NOTE: COAT INSIDE BLIND FLG. AS SHOWN W/ 2 COATS (16 MILS) COAL TAR EPOXY - AMERCOAT #78

PC. NO.	REF. SHT. (LAYOUT)
662A ✓	4L9
698A ✓	4L10
723A ✓	4L11
736A ✓	4L13
766A ✓	4L15

Ameron PIPE PRODUCTS GROUP

RUSSIAN RIVER - CONTRACT # 1

CHANGE ORDERS	SYMBOL	REVISION	DATE	BY	APPV'D.

UNLESS OTHERWISE SPECIFIED DIMENSIONS ARE IN INCHES

TOLERANCES

FRACT.	.X	.XX	.XXX	ANGLE
±	±	±	±	±

DWG. SCALE

DRAWN	LW	1-9-76
CHECKED		
APPV'D.		

2314

4F33.0

60-4-102.128.124

1000-1000 (8/70)

4F34

FLAG	ITEM NO	QUANTITY THIS DWG	DESCRIPTION	MATERIAL SPECIFICATION
	—	164'	49.875" O.D. CYLINDER	
	P2	4	48"-M-3516 SPIGOT RING	

CLASS 320 = 8GA (44)
260 = 10GA (45)

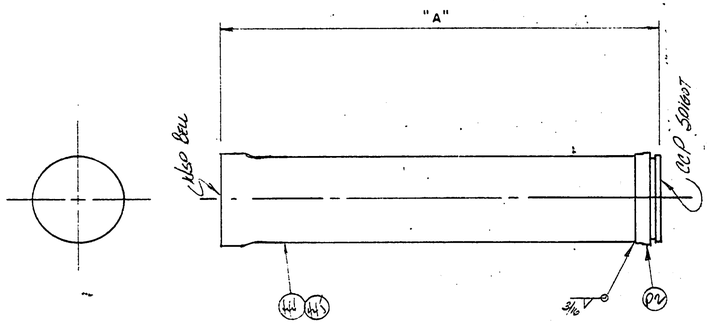

PC. NO.	CUT SECT.	CLASS	"A"			LAYOUT REF. SHT.
655 ✓	—	320 ✓	41'-6"			4L8
688 ✓	—	320 ✓	41'-6"			4L10
738 ✓	—	260 ✓	41'-6"			4L13
848 ✓	—	260 ✓	41'-6"			4L18

Special

CHANGE ORDERS	SYMBOL	REVISION	DATE	BY	APPV'D

UNLESS OTHERWISE SPECIFIED DIMENSIONS ARE IN INCHES

TOLERANCES

FRACT	.X	XX	.XXX	ANGLE
±	±	±	±	±

DWG SCALE

Ameron PIPE PRODUCTS GROUP

RUSSIAN RIVER - CONTRACT #1

DRAWN	KW	1-9-76
CHECKED		
APPV'D.		

2314 4F34.0

60-4-102.128.125

4F35

FLAG	ITEM NO.	QUANTITY THIS DWG.	DESCRIPTION	MATERIAL SPECIFICATION
	446	41'-3.25"	49.875" O.D. x BGA. CYL.	
	417	1	2" x 3000# THREADOLET	
	449	1	3/16" R x 6" Sq COLLAR Rec To 24.94" R.	ASTM A 283 GRC

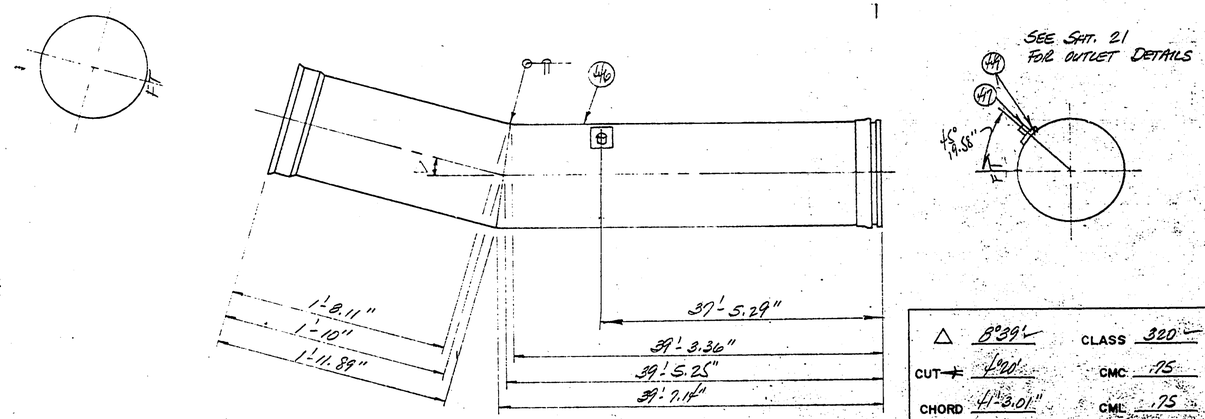

△ 8°39'
CUT 4°20'
CHORD 41'-3.01"
CLASS 320
CMC .75
CML .75
674
4L9

Ameron PIPE PRODUCTS GROUP

Russian River - Contract #1

CHANGE ORDERS	SYMBOL	REVISION	DATE	BY	APPV'D

UNLESS OTHERWISE SPECIFIED DIMENSIONS ARE IN INCHES
TOLERANCES

FRACT	X	XX	XXX	ANGLE
±	±	±	±	±

DWG. SCALE

DRAWN	LW	1-8-76
CHECKED		
APPV'D.		

2314 4F35.0

60-4-102.128.126

4F37

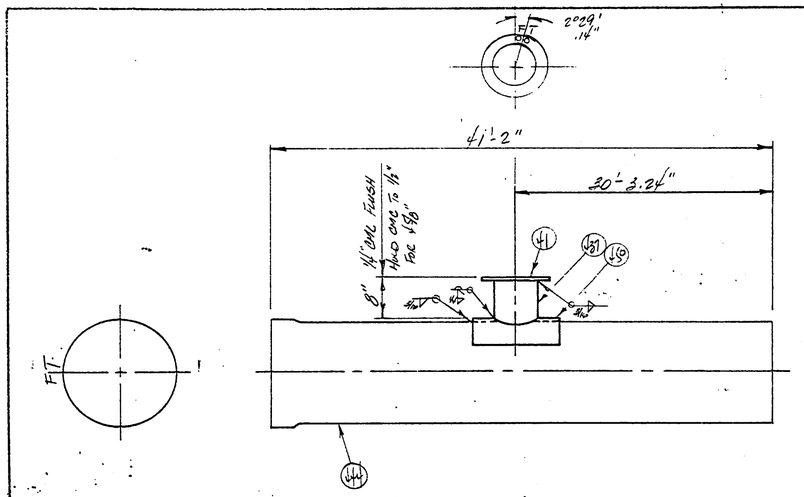

FLAG	ITEM NO	QUANTITY THIS DWG.	DESCRIPTION	MATERIAL SPECIFICATION
	444	41'-2"	49.875" O.D. X 8GA. CYL.	
	41	1	6" x 150# SLIP-ON FLG. F.F.	
	437	10"	6" STD WT. STEEL PIPE	
	450	1	1/4" R x 12" 50 COLLAR ROLL TO 24.94" R	ASTM A283 GR C

CLASS 320
CMC .75
CML .75
689
4L10

Ameron PIPE PRODUCTS GROUP

RUSSIAN RIVER - CONTRACT #1

CHANGE ORDERS	SYMBOL	REVISION	DATE	BY	APPV'D.

UNLESS OTHERWISE SPECIFIED DIMENSIONS ARE IN INCHES

TOLERANCES

FRACT.	.X	XX	.XXX	ANGLE
±	±	±	±	±

DWG. SCALE

DRAWN	KW	1-9-76
CHECKED		
APPV'D.		

2314 4F37.0

60-4-102.128.127

4F38

FLAG	ITEM NO	QUANTITY THIS DWG.	DESCRIPTION	MATERIAL SPECIFICATION
	437	11'±	6" SCH. 40 STEEL PIPE	
	432	3	6"x 90° STD WT ELBOW L.R.	
	418	2	6" TENSION LUGS SEE SHT 4B1	ASTM A283 GR C OR
	411	1	6"x 150# SLIP-ON FLG F.F.	✓

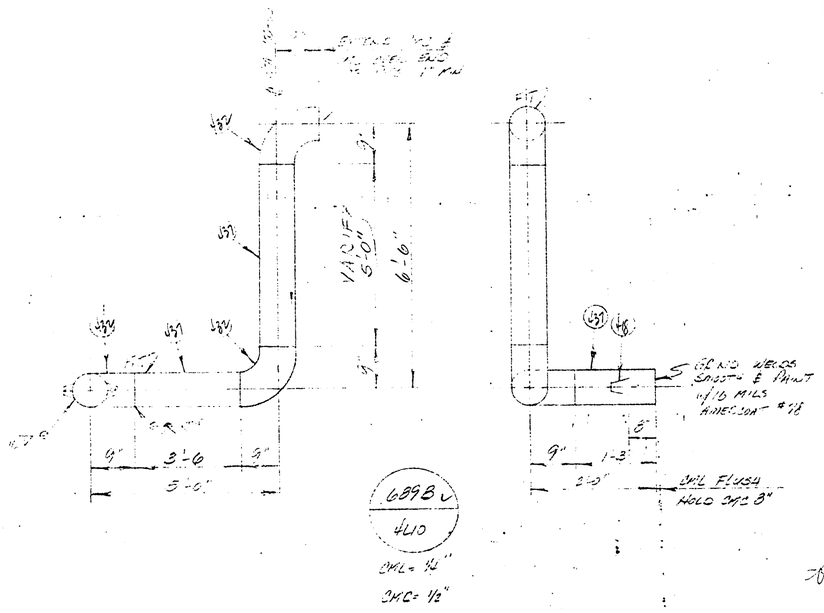

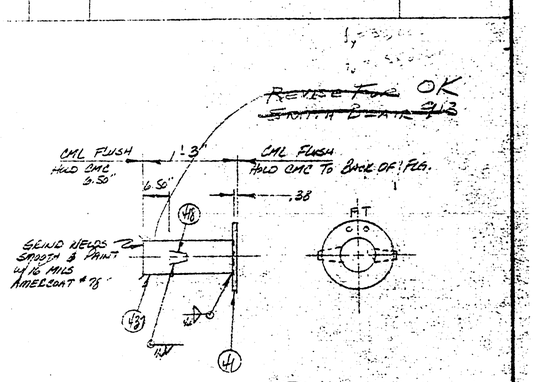

Special

CHANGE ORDERS	SYMBOL	REVISION	DATE	BY	APPV'D.

UNLESS OTHERWISE SPECIFIED DIMENSIONS ARE IN INCHES
TOLERANCES

FRACT.	.X	.XX	.XXX	ANGLE
±	±	±	±	±

DWG. SCALE

Ameron PIPE PRODUCTS GROUP

RUSSIAN RIVER - CONTRACT #1

DRAWN	KW	1-9-96
CHECKED		
APPV'D.		

CB14

4F38.0

60-4-102.128.128

I-CUT

4F39

FLAG	ITEM NO	QUANTITY THIS DWG	DESCRIPTION	MATERIAL SPECIFICATION
	446	41'-3.25"	49.875" O.D. x 8GA. CYL.	
	45	1	18" CL. "D" SKIRTED FLG SEE SHT 4B	
	455	1	1/4" PL x 38.25" O.D. COLLAR ROLL TO 24.94" R.	ASTM A283 GR C

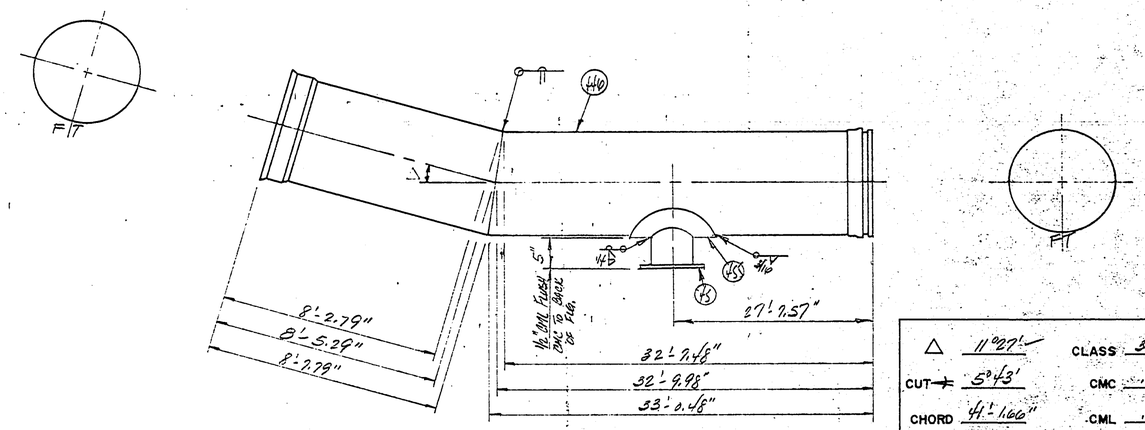

△ 11°27'

CUT ⊥ 5°43'

CHORD 41'-1.66"

CLASS 320

CMC .75

CML .75

723 / 4411

Ameron PIPE PRODUCTS GROUP

RUSSIAN RIVER – CONTRACT #1

CHANGE ORDERS	SYMBOL	REVISION	DATE	BY	APPV'D.

UNLESS OTHERWISE SPECIFIED DIMENSIONS ARE IN INCHES

TOLERANCES

FRACT.	.X	.XX	.XXX	ANGLE
±	±	±	±	±

DWG. SCALE

DRAWN	KW	1-8-76
CHECKED		
APPV'D.		

2314 4F39.0

60-4-102.128.129

1-CUT

4F40

FLAG	ITEM NO	QUANTITY THIS DWG	DESCRIPTION	MATERIAL SPECIFICATION
	446	31'-10.63"	49.875" O.D. X 8GA. C/L.	
	P1	1	48" X 1/4 R. BELL BAND.	

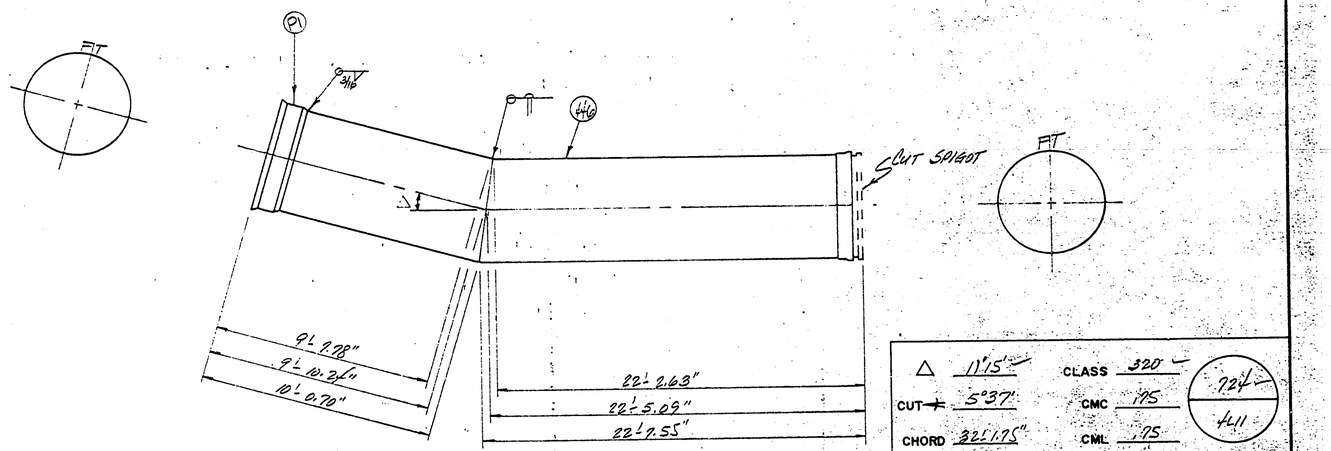

△ 11°15"
CUT 5°37"
CHORD 32L 1.75"

CLASS 320
CMC .175
CML .175

724
411

OS #25

Amercon PIPE PRODUCTS GROUP

RUSSIAN RIVER - CONTRACT #1

CHANGE ORDERS	SYMBOL	REVISION	DATE	BY	APPV'D

UNLESS OTHERWISE SPECIFIED DIMENSIONS ARE IN INCHES
TOLERANCES

FRACT.	.X	.XX	.XXX	ANGLE
±	±	±	±	±

DRAWN	LW	1-8-76
CHECKED		
APPV'D		

DWG. SCALE

2314

4F40.0

60-4-102.128.130

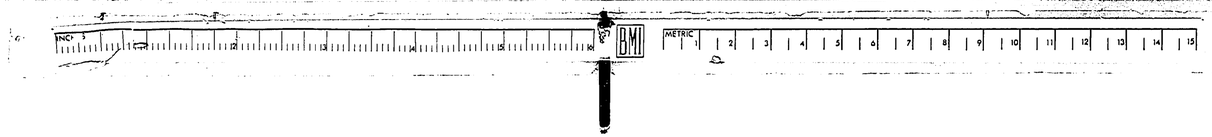

I-CUT

4F41

FLAG	ITEM NO	QUANTITY THIS DWG	DESCRIPTION	MATERIAL SPECIFICATION
	46	41'-2.25"	49.875" O.D. X BGA. CYL.	

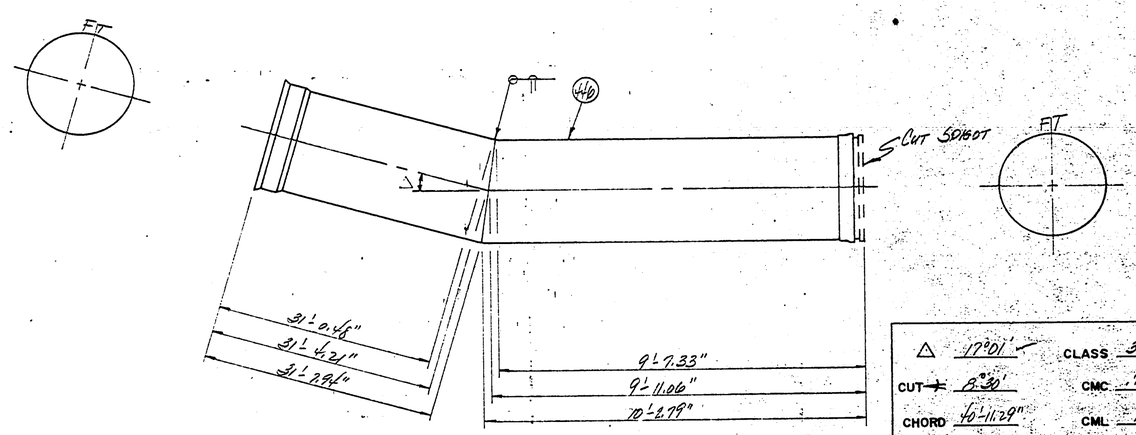

△ 17°01' CLASS 320

CUT 8°30' CMC .75

CHORD 40'-11.29" CML .75

725 L
4L12

Ameron PIPE PRODUCTS GROUP

RUSSIAN RIVER – CONTRACT #1

CHANGE ORDERS	SYMBOL	REVISION	DATE	BY	APPV'D

UNLESS OTHERWISE SPECIFIED DIMENSIONS ARE IN INCHES

TOLERANCES

FRACT.	X	XX	XXX	ANGLE
±	±	±	±	±

DWG. SCALE

DRAWN	KW	1-8-76
CHECKED		
APPV'D		

23.14

4F41.0

60-4-102.128.131

I-CUT

4F42

FLAG	ITEM NO	QUANTITY THIS DWG	DESCRIPTION	MATERIAL SPECIFICATION
	446	41'-3.25"	49.875" O.D. x 8GA. CYL.	

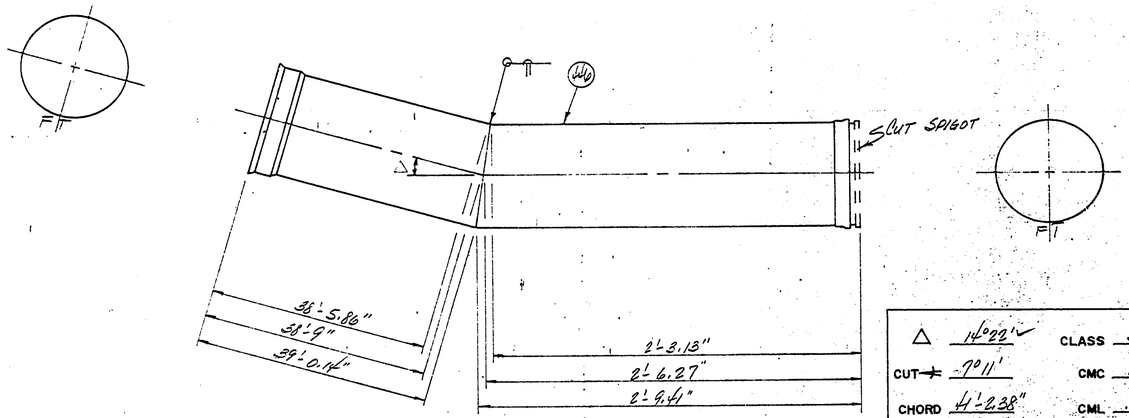

△	14°22'	CLASS	320
CUT	7°11'	CMC	.75
CHORD	41'-2.38"	CML	.75

726 / 4L12

Ameron PIPE PRODUCTS GROUP

RUSSIAN RIVER - CONTRACT #1

CHANGE ORDERS	SYMBOL	REVISION	DATE	BY	APPV'D.

UNLESS OTHERWISE SPECIFIED DIMENSIONS ARE IN INCHES

TOLERANCES

FRACT	X	XX	XXX	ANGLE
±	±	±	±	±

DWG. SCALE

DRAWN	KW	1-8-76
CHECKED		
APPV'D.		

2314

4F42.0

60-4-102.128.132

1-CUT

4F43

FLAG	ITEM NO.	QUANTITY THIS DWG	DESCRIPTION	MATERIAL SPECIFICATION
	446	41'-3.25"	49.875" O.D. X BGA. CYL	

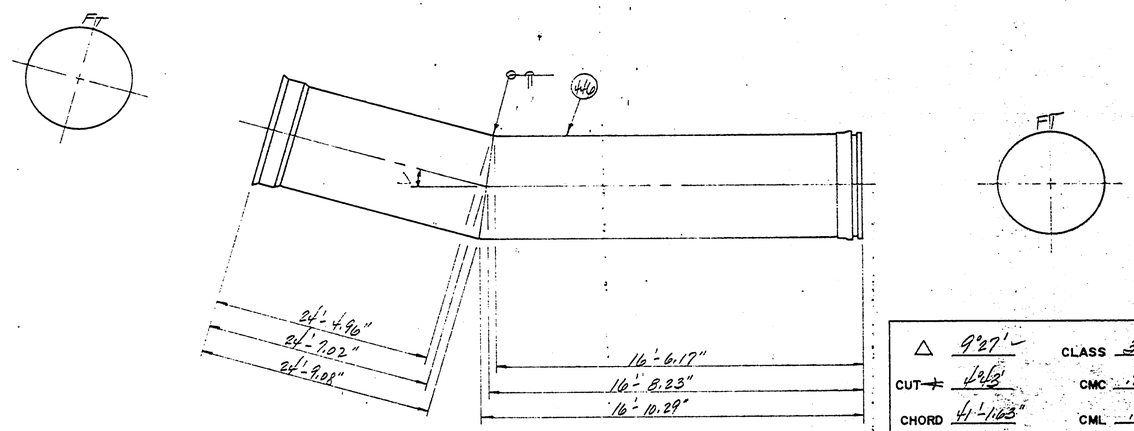

△ 9°27'
CUT 4°43'
CHORD 41'-1.63"
CLASS 320
CMC .75
CML .75
730
4L12

Ameron PIPE PRODUCTS GROUP

Russian River - Contract #1

CHANGE ORDERS	SYMBOL	REVISION	DATE	BY	APPV'D.

UNLESS OTHERWISE SPECIFIED DIMENSIONS ARE IN INCHES

TOLERANCES

FRACT	X	XX	XXX	ANGLE
±	±	±	±	±

DWG. SCALE

DRAWN	KW	1-8-76
CHECKED		
APPV'D.		

2314

60-4-102.128.133

4F43.0

2 - CUT

JF44

FLAG	ITEM NO.	QUANTITY THIS DWG.	DESCRIPTION	MATERIAL SPECIFICATION
	45	20'2"	44.875" O.D. x 10GA. C4L.	
	47	1	2"ø 3000# THREADOLET	
	49	1	3/16"R x 6"SQ COLLAR Roll To 24.94" R.	ASTM A283 Gr. C

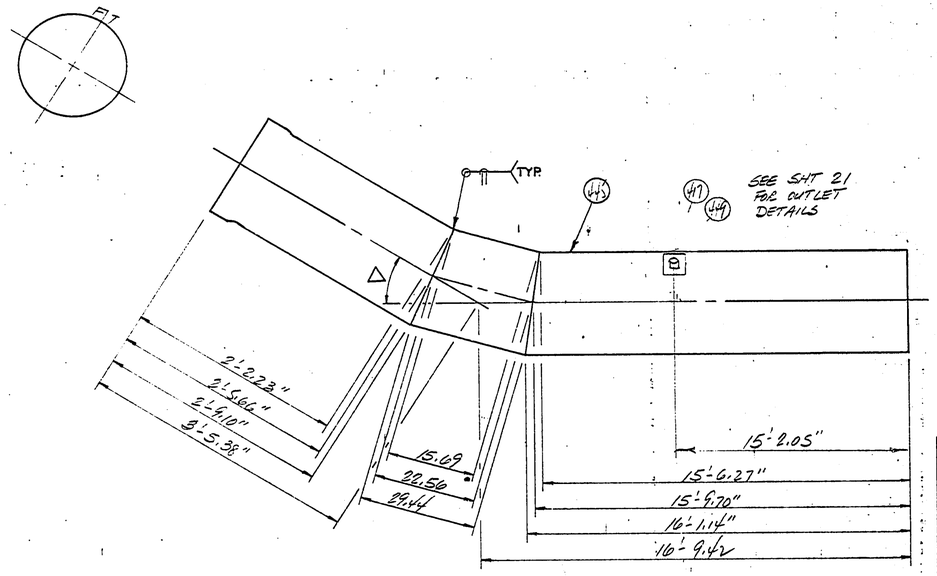

△	31°23'
CUT +	9°51'
R	81.87
OS#	26
CLASS	200
CMC	.75
CML	.75
CHORD	19'-9.72"

741 / 448

CHANGE ORDERS	SYMBOL	REVISION	DATE	BY	APPV'D.

UNLESS OTHERWISE SPECIFIED DIMENSIONS ARE IN INCHES

TOLERANCES

FRACT.	.X	.XX	.XXX	ANGLE
±	±	±	±	±

DWG. SCALE

Ameron PIPE PRODUCTS GROUP

RUSSIAN RIVER - CONTRACT #1

DRAWN	KW	1-8-76
CHECKED		
APPV'D.		

2314

60-4-102.128.134

JF44.0

BMI

2-CUT

4F45

FLAG	ITEM NO.	QUANTITY THIS DWG.	DESCRIPTION	MATERIAL SPECIFICATION
	445	41'-2"	49.875" O.D. x 10GA. CYL.	

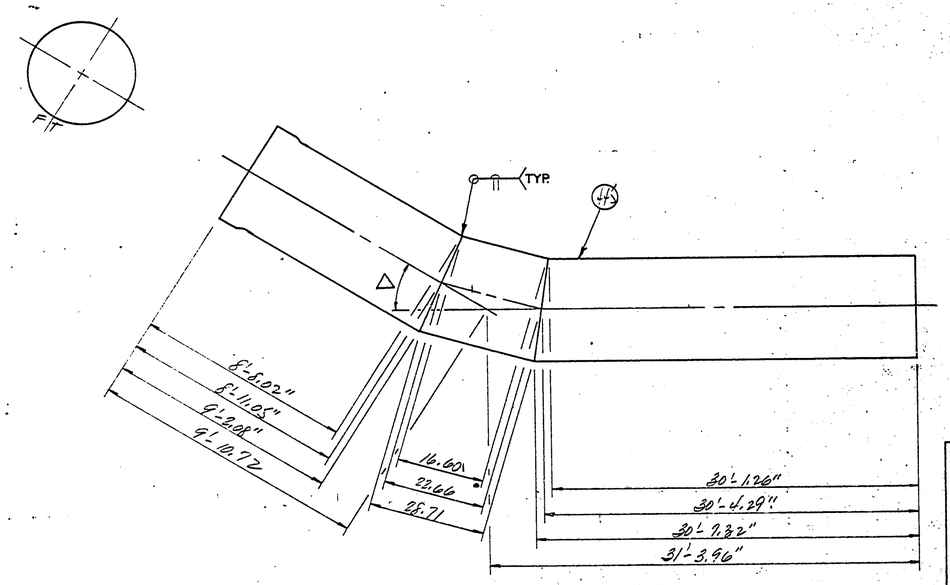

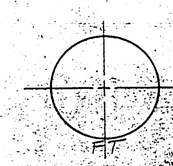

△	27°42'	CLASS	260
CUT ⌀	6°56'	CMC	.75
R	93.27	CML	.75
		CHORD	40'-4.23"

742
4413

Ameron PIPE PRODUCTS GROUP

Russian River - Contract #1

CHANGE ORDERS	SYMBOL	REVISION	DATE	BY	APPV'D.

UNLESS OTHERWISE SPECIFIED DIMENSIONS ARE IN INCHES

TOLERANCES

FRACT.	.X	.XX	.XXX	ANGLE
±	±	±	±	±

DWG. SCALE

DRAWN	BW	1-8-76
CHECKED		
APPV'D.		

2314

4F45.0

60-4-102.128.135

1-CUT

4F46

FLAG	ITEM NO	QUANTITY THIS DWG.	DESCRIPTION	MATERIAL SPECIFICATION
	47	41'-3.25"	49.875"O.D. x 106A C4L	

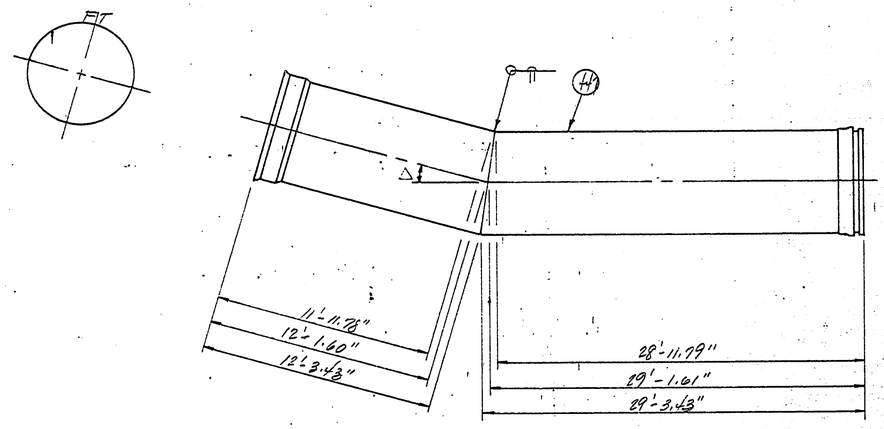

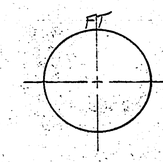

△	8°22'
CUT	4'11"
CHORD	41'-2.11"
CLASS	200
CMC	.75
CML	.75

.745
4.13

Ameron PIPE PRODUCTS GROUP

Russian River - Contract #1

UNLESS OTHERWISE SPECIFIED, DIMENSIONS ARE IN INCHES
TOLERANCES

FRACT.	.X	.XX	.XXX	ANGLE
±	±	±	±	±

CHANGE ORDERS	SYMBOL	REVISION	DATE	BY	APPV'D.	DWG. SCALE

DRAWN	W	1-8-76
CHECKED		
APPV'D.		

23/4

60-4-102.128.136

4F46.0

1000-1000 (8/70)

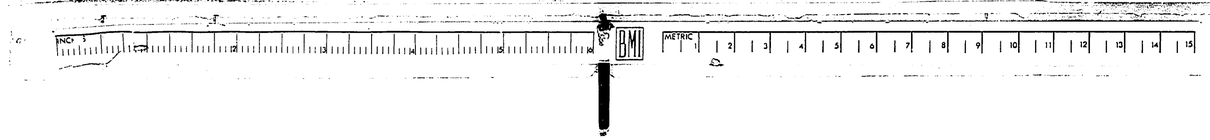

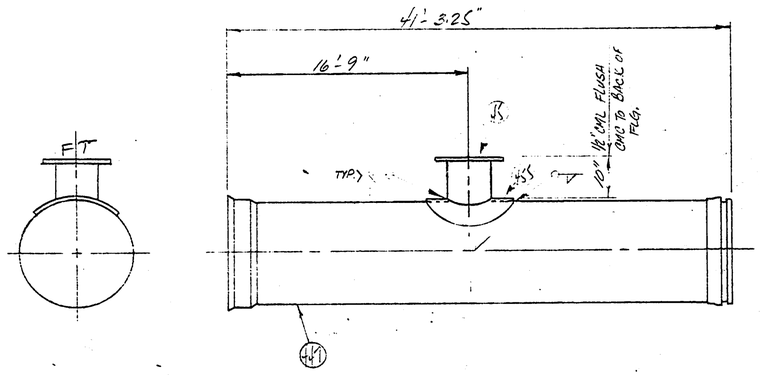

FLAG	ITEM NO.	QUANTITY THIS DWG	DESCRIPTION	MATERIAL SPECIFICATION
	447	41'-3.25"	49.875" O.D. x 10GA. CYL.	
	45	1	18" CL. "D" SKIRTED FLG. SEE SHT 481	
	455	1	3/16" R x 38.25" O.D. COLLAR ROLL TO 24.94" R	ASTM A283 GR C

APPROVED
MAR 9 1976

CLASS 260
CMC .75
CML .75

838
448

Ameron PIPE PRODUCTS GROUP

RUSSIAN RIVER - CONTRACT #1

CHANGE ORDERS	SYMBOL	REVISION	DATE	BY	APPV'D
	2	delete 12" O.L.	4/9/76	RB	
	1	LEVISED MH HEIGHT	2-6-76	KW	

UNLESS OTHERWISE SPECIFIED DIMENSIONS ARE IN INCHES
TOLERANCES
FRACT ± | .X ± | .XX ± | .XXX ± | ANGLE ±
DWG. SCALE

DRAWN KW 1-12-76
CHECKED
APPV'D

2314
4F47-2
60-4-102.128.137

FLAG	ITEM NO.	QUANTITY THIS DWG	DESCRIPTION	MATERIAL SPECIFICATION
	144	13'-3.68	49.875" O.D. x 10GA CYL.	
	P1	1	48" BELL RING	

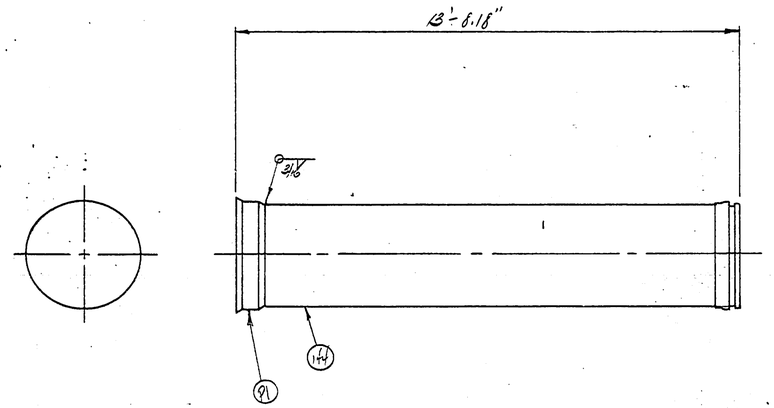

CLASS 260
CMC .75
CML .75
CS# 5

839
4-18

Ameron PIPE PRODUCTS GROUP

RUSSIAN RIVER - CONTRACT #1

CHANGE ORDERS	SYMBOL	REVISION	DATE	BY	APPV'D.

UNLESS OTHERWISE SPECIFIED DIMENSIONS ARE IN INCHES

TOLERANCES

FRACT.	.X	.XX	.XXX	ANGLE
±	±	±	±	±

DWG. SCALE

DRAWN	KW	1-12-76
CHECKED		
APPV'D.		

2314

4F48.0

60-4-102.128.138

1000-1000 (8/70)

I-CUT

4F49

FLAG	ITEM NO.	QUANTITY THIS DWG.	DESCRIPTION	MATERIAL SPECIFICATION
	447	41'-3.25"	49.875" O.D. x 10GA. CYL.	
	417	1	2" x 3000# THREDOLET	
	449	1	3/16"R x 6" SQ COLLAR ROLL TO 24.94"R	ASTM A 283 GR C

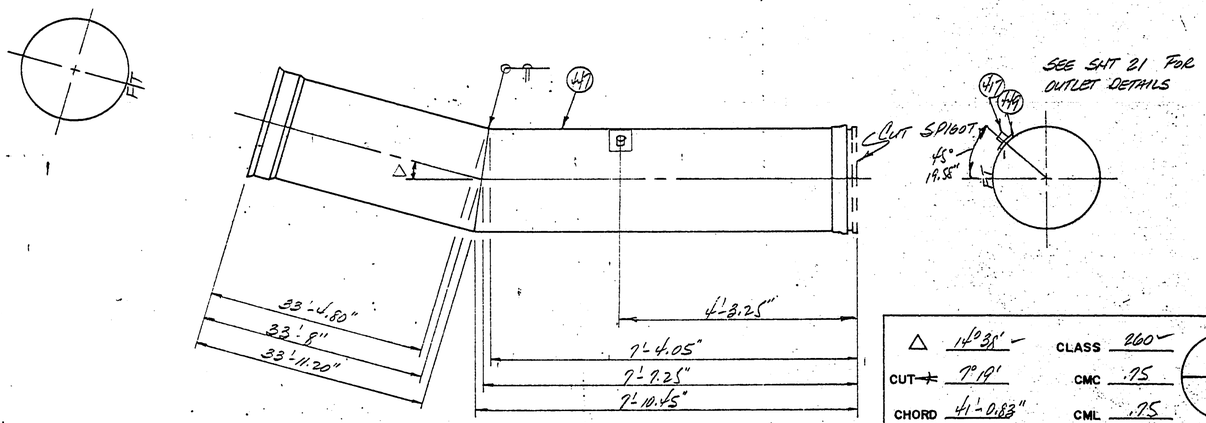

△	14°38'	CLASS	260
CUT ⊥	7°19'	CMC	.75
CHORD	41'-0.83"	CML	.75

843
448

Ameron PIPE PRODUCTS GROUP

RUSSIAN RIVER - CONTRACT #1

CHANGE ORDERS	SYMBOL	REVISION	DATE	BY	APPV'D.

UNLESS OTHERWISE SPECIFIED DIMENSIONS ARE IN INCHES

TOLERANCES

FRACT.	.X	.XX	.XXX	ANGLE
±	±	±	±	±

DWG. SCALE

DRAWN	CW	1-8-76
CHECKED		
APPV'D.		

2314

60-4-102.128.139

4F49.0

1000 1000 (8/70)

4F50

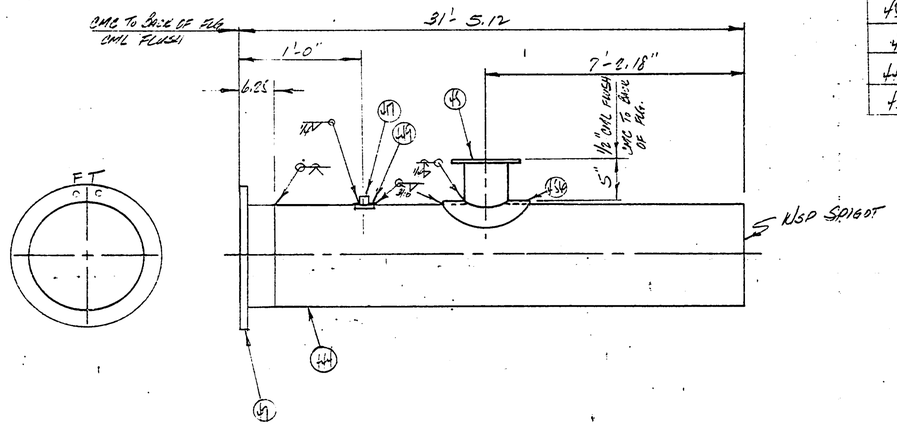

FLAG	ITEM NO.	QUANTITY THIS DWG	DESCRIPTION	MATERIAL SPECIFICATION
	444	30'-10.87"	49.875" O.D. × 8GA. CYL.	
	47	1	48" CL. "D" SKIRTED FLG. SEE SHT. 481	
	45	1	18" CL. "D" SKIRTED FLG. SEE SHT. 481	
	417	1	2" × 3000# THREADOLET	
	449	1	3/16" PL × 6" SQ COLLAR ROLL TO 24.94" R	ASTM A283 GR C
	456	1	1/4" PL × 38.25" O.D. COLLAR ROLL TO 24.94" R.	"

CLASS 320
CMC .75
CML .75
CUT SCH. 27

853
4L19

Ameron PIPE PRODUCTS GROUP

RUSSIAN RIVER - CONTRACT #1

CHANGE ORDERS	SYMBOL	REVISION	DATE	BY	APPV'D.

UNLESS OTHERWISE SPECIFIED DIMENSIONS ARE IN INCHES

TOLERANCES

FRACT.	.X	XX	.XXX	ANGLE
±	±	±	±	±

DWG. SCALE

DRAWN	KW	1-12-76
CHECKED		
APPV'D.		

2314

4F50.0

60-4-102.128.140

4F51

FLAG	ITEM NO	QUANTITY THIS DWG	DESCRIPTION	MATERIAL SPECIFICATION
	444	10'-3.13	49.875" O.D. X .8GA CYL.	
	47	1	48" CL. "D" SKIRTED FLG. SEE 4B1 SHT	
	417	1	2" x 3000# THREADOLET	
	449	1	3/16" PL x 6" SQ. COLLAR RAL TO 24.94" R	ASTM A283 GR C

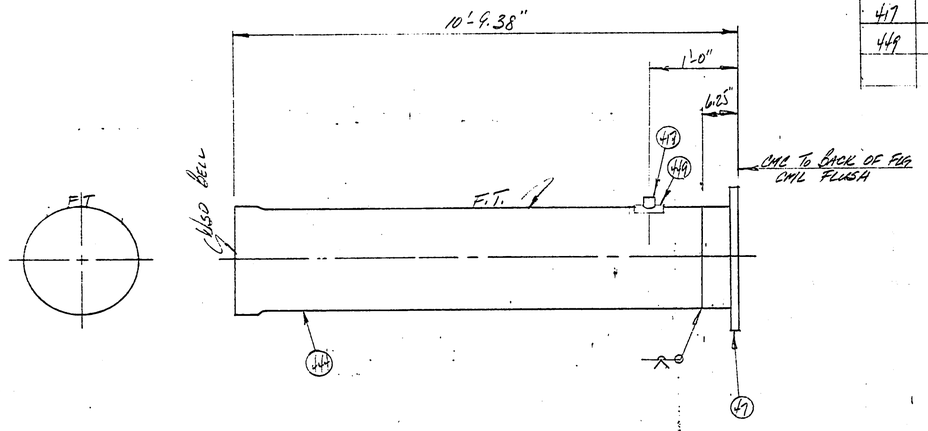

CLASS 320
CMC .75
CML .75
CS# 27

854
449

Ameron PIPE PRODUCTS GROUP

RUSSIAN RIVER - CONTRACT #1

CHANGE ORDERS	SYMBOL	REVISION	DATE	BY	APPV'D.

UNLESS OTHERWISE SPECIFIED DIMENSIONS ARE IN INCHES

TOLERANCES

FRACT	.X	XX	.XXX	ANGLE
±	±	±	±	±

DWG. SCALE

DRAWN	KW	1-12-76
CHECKED		
APPV'D.		

2314

4F51.0

60-4-102.128.141

2-CUT

4F52

FLAG	ITEM NO.	QUANTITY THIS DWG.	DESCRIPTION	MATERIAL SPECIFICATION
	444	41'-2"	49.875" O.D. x BGA. CYL	
	417	1	2" x 3000# THREDOLET	
	449	1	3/16" R x 6" SQ COLLAR	ASTM A283 GRC

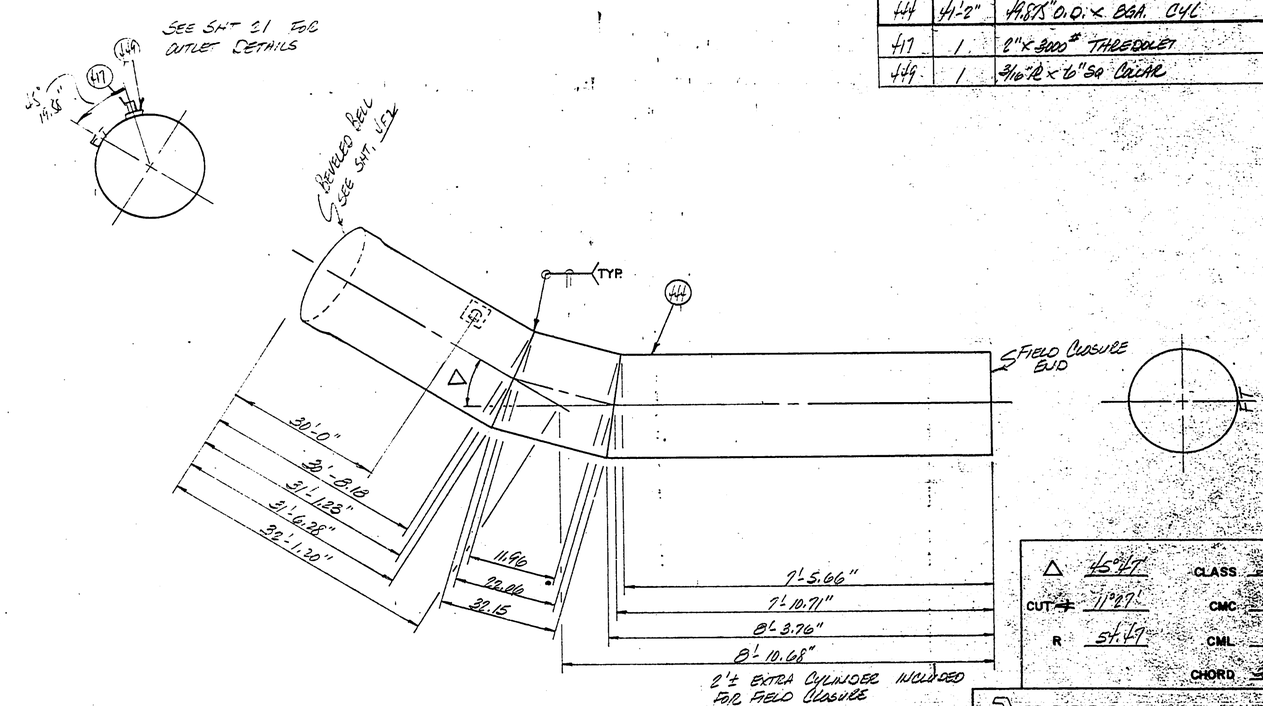

△	45°47'	CLASS	320
CUT ⊥	11°27'	CMC	.75
R	54.47	CML	.75
		CHORD	38'-9.91"

861
449

Ameron PIPE PRODUCTS GROUP

RUSSIAN RIVER – CONTRACT #1

CHANGE ORDERS	SYMBOL	REVISION	DATE	BY	APPV'D

UNLESS OTHERWISE SPECIFIED DIMENSIONS ARE IN INCHES

TOLERANCES

FRACT.	.X	.XX	.XXX	ANGLE
±	±	±	±	±

DWG. SCALE

DRAWN	LW	1-8-76
CHECKED		
APPV'D		

2314

4F52.0

60-4-102.128.142

1000 1000 -8-701

SKIRTED

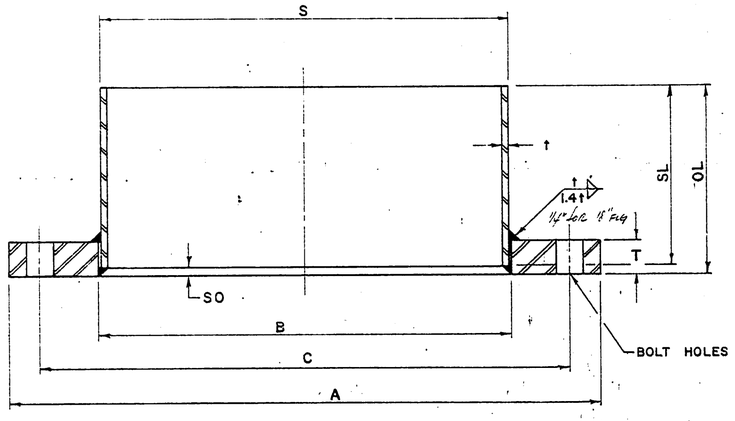

NOMINAL PIPE SIZE	MAT'L LIST NO	QUANTITY	OVERALL LENGTH OL	SKIRT LENGTH SL	SKIRT THICKNESS t	SKIRT OFFSET SO	SKIRT O.D. S	I.D. FLANGE B	O.D. FLANGE A	NUMBER BOLT HOLES	BOLT CIRCLE C	DIAM. BOLT HOLES	FLANGE THICKNESS T
24									32	20	29 1/2	1 3/8	1 1/4
30									38 3/4	28	36	1 3/8	1 3/8
36									46	32	42 3/4	1 5/8	1 5/8
42									53	36	49 1/2	1 5/8	1 3/4
48	47		6.25	6.00	1/4	1/4	49.875	49.94	59 1/2	44	56	1 5/8	1 3/4
54									66 1/4	44	62 3/4	1 7/8	2 1/8
60									73	52	69 1/4	1 7/8	2 1/4
48	48		6.31	6.00	.31	.31	49.875	49.94	59 1/2	44	56	1 5/8	1 3/4
18	46		12.50	12.00	.50	.50	18.00	18.00	28	24	24 3/4	1 3/8	1 3/8
18	45		12.50	12.00	1/2	1/2	18.00	18.00	25	16	22 3/4	1 1/4	1 1/16

SPECIFICATIONS

STEEL:

FLANGE - ASTM A-283, Gr. B, C or D ~~or Comm Qu~~
SKIRT - ASTM A-283, Gr. C or D
ASTM A-570, Gr. C

FACING:

FINAL MACHINING OF THE FLANGES SHALL BE DONE ONLY AFTER ALL WELDING TO THE PIPE SKIRT IS COMPLETED. FLANGES SHALL BE FACED NORMAL TO THE LONGITUDINAL AXIS OF THE PIPE. THE FLANGES SHALL BE FACED SMOOTH OR MAY HAVE A SERRATED FINISH OF APPROXIMATELY 32 SERRATIONS PER INCH, APPROXIMATELY 1/64" DEEP. SERRATIONS MAY BE SPIRAL OR CONCENTRIC. EDGES OF FACED SURFACES AND BOLT HOLES SHALL BE DEBURRED.

TOLERANCES:

INSIDE DIAMETER +1/16" -0"

OUTSIDE DIAMETER ± 1/8"

THICKNESS OF FLANGES +1/8" -0"

BOLT CIRCLE ± 1/16"

OUTSIDE DIAMETER SKIRT ± 0.080" MEASURED AT ANY POINT

BOLT HOLES SHALL BE EQUALLY SPACED ± 1/64"

DIAMETERS A, B AND C TO BE CONCENTRIC ABOUT CENTERLINE ± 1/16"

SKIRT CLOSING SEAMS SHALL BE FULL PENETRATION BUTTWELD WITH 1/16" MAX. CROWN.

SYMBOL	REVISION	DATE	BY	APPV'D.

Ameron PIPE PRODUCTS GROUP

Russian River - Contract #1

DRAWN	LW	1-12-76	AWWA CLASS "D" SKIRTED FLG.
CHECKED			2314 781.0
APPV'D.			60-4-102.128.143

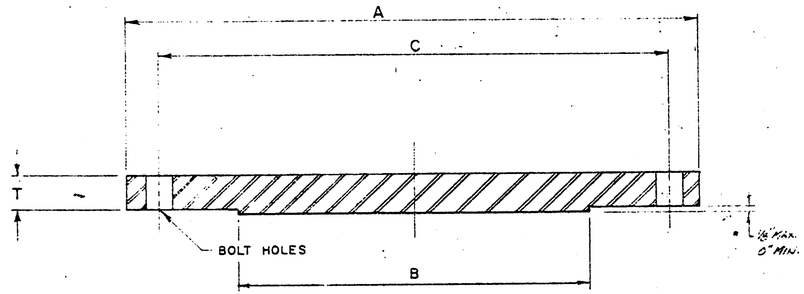

NOMINAL PIPE SIZE	MAT'L LIST NO	QUANTITY	RAISED FACE B	O.D. FLANGE A	NUMBER BOLT HOLES	BOLT CIRCLE C	DIAM. BOLT HOLES	FLANGE THICKNESS T
12			11	19	12	17	1	13/16
14			13	21	12	18 3/4	1 1/8	15/16
16			15	23 1/2	16	21 1/4	1 1/8	1
18	49		15	28	24	24 3/4	1 3/8	1 3/8
20			19	27 1/2	20	25	1 1/4	1 1/8
24			23	32	20	29 1/2	1 3/8	1 1/4
30			29	38 3/4	28	36	1 3/8	1 3/8
36			35	46	32	42 3/4	1 5/8	1 5/8
42			41	53	36	49 1/2	1 5/8	1 3/4
48			47	59 1/2	44	56	1 5/8	1 3/4
18	410		15	25	16	22 3/4	1 1/4	1 1/16

SPECIFICATIONS

STEEL.
ASTM A-283, Gr. B, C or D ~~as ASTM A-36~~

FACING.
THE FLANGES SHALL BE FACED SMOOTH OR MAY HAVE A SERRATED FINISH OF APPROXIMATELY 32 SERRATIONS PER INCH, APPROXIMATELY 1/64" DEEP. SERRATIONS MAY BE SPIRAL OR CONCENTRIC. EDGES OF FACED SURFACES AND BOLT HOLES SHALL BE DEBURRED.

TOLERANCES:

RAISED FACE DIAMETER +0" − 1/8"

OUTSIDE DIAMETER ± 1/8"

THICKNESS OF FLANGES + 1/8" − 0"

BOLT CIRCLE ± 1/16"

BOLT HOLES SHALL BE EQUALLY SPACED ± 1/64"

DIAMETERS A, B AND C TO BE CONCENTRIC ABOUT CENTERLINE ± 1/16"

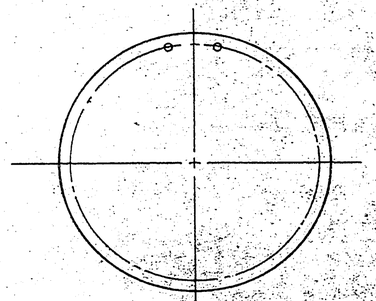

Ameron PIPE PRODUCTS GROUP

RUSSIAN RIVER - CONTRACT #1

SYMBOL	REVISION	DATE	BY	APPV'D

DRAWN	KW	12-15-75
CHECKED		
APPV'D		

AWWA CLASS [redacted] BLIND FLG.

2314 482.0

60-4-102.128.144

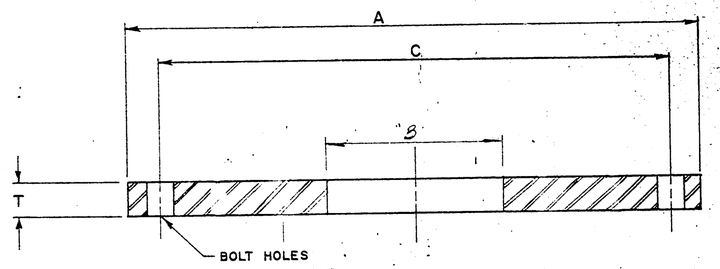

NOMINAL PIPE SIZE	MAT'L LIST NO	QUANTITY	I.D. FLANGE B	O.D. FLANGE A	NUMBER BOLT HOLES	BOLT CIRCLE C	DIAM. BOLT HOLES	FLANGE THICKNESS T
6				11	8	9 1/2	7/8	11/16
8				13 1/2	8	11 3/4	7/8	11/16
10				16	12	14 1/4	1	11/16
12				19	12	17	1	13/16
14				21	12	18 3/4	1 1/8	15/16
16				23 1/2	16	21 1/4	1 1/8	1
18	411	3	10.81"	25	16	22 3/4	1 1/4	1 1/16
20		1		27 1/2	20	25	1 1/4	1 1/8
24				32	20	29 1/2	1 3/8	1 1/4

SPECIFICATIONS

STEEL:
ASTM A-283, Gr. B, C or D ~~or ASTM A-36~~

FACING:
THE FLANGES SHALL BE FACED SMOOTH OR MAY HAVE A SERRATED FINISH OF APPROXIMATELY 32 SERRATIONS PER INCH, APPROXIMATELY 1/64" DEEP. SERRATIONS MAY BE SPIRAL OR CONCENTRIC. EDGES OF FACED SURFACES AND BOLT HOLES SHALL BE DEBURRED.

TOLERANCES:
INSIDE DIAMETER + 1/16" −0"
OUTSIDE DIAMETER ± 1/8"
THICKNESS OF FLANGES + 1/8" −0"
BOLT CIRCLE ± 1/16"
BOLT HOLES SHALL BE EQUALLY SPACED ± 1/64"
DIAMETERS A, B AND C TO BE CONCENTRIC ABOUT CENTERLINE ± 1/16"

American PIPE PRODUCTS GROUP

Russian River - Contract #1

SYMBOL	REVISION	DATE	BY	APP'V'D

DRAWN TW 1-12-76
CHECKED
APP'V'D

AWWA CLASS "D" FLANGES

2814 483.0

60-4-102.128.145

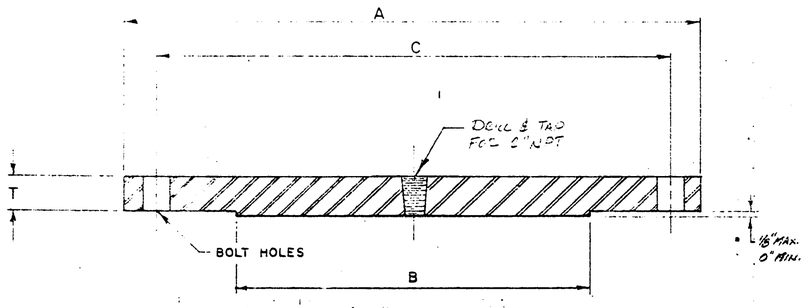

NOMINAL PIPE SIZE	MAT'L LIST NO	QUANTITY	RAISED FACE B	O.D. FLANGE A	NUMBER BOLT HOLES	BOLT CIRCLE C	DIAM. BOLT HOLES	FLANGE THICKNESS T
12			11	19	12	17	1	13/16
14			13	21	12	18 3/4	1 1/8	15/16
16			15	23 1/2	16	21 1/4	1 1/8	1
18	QTY		15	25	16	22 3/4	1 1/4	1 1/16
20			19	27 1/2	20	25	1 1/4	1 1/8
24			23	32	20	29 1/2	1 3/8	1 1/4
30			29	38 3/4	28	36	1 3/8	1 3/8
36			35	46	32	42 3/4	1 5/8	1 5/8
42			41	53	36	49 1/2	1 5/8	1 3/4
48			47	59 1/2	44	56	1 5/8	1 3/4

SPECIFICATIONS

STEEL:
ASTM A-283, Gr. B, C or D OR ~~ASTM A-36~~

FACING:
THE FLANGES SHALL BE FACED SMOOTH OR MAY HAVE A SERRATED FINISH OF APPROXIMATELY 32 SERRATIONS PER INCH, APPROXIMATELY 1/64" DEEP. SERRATIONS MAY BE SPIRAL OR CONCENTRIC. EDGES OF FACED SURFACES AND BOLT HOLES SHALL BE DEBURRED.

TOLERANCES:

RAISED FACE DIAMETER +0" - 1/8"

OUTSIDE DIAMETER ± 1/8"

THICKNESS OF FLANGES +1/8" -0"

BOLT CIRCLE ± 1/16"

BOLT HOLES SHALL BE EQUALLY SPACED ± 1/64"

DIAMETERS A, B AND C TO BE CONCENTRIC ABOUT CENTERLINE ± 1/16"

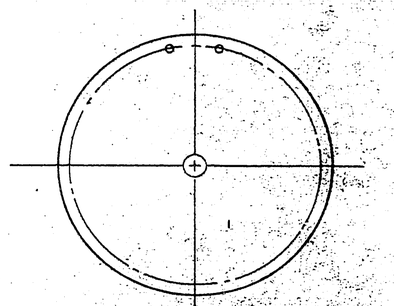

Ameron PIPE PRODUCTS GROUP

Russian River - Contract #2

						DRAWN	LW	7-11-75
						CHECKED		
SYMBOL	REVISION	DATE	BY	APPV'D		APPV'D		

AWWA CLASS "D" BLIND FLG.

60-4-102.128.146

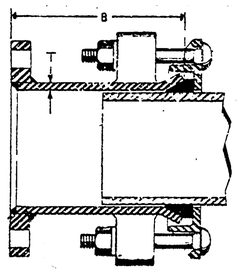

SUPPLY W/ TENSION LUGS, RODS & NUTS FOR
* 200 PSI. WORKING PRESSURE

PIECE NO.	SHEET NO.	MT'L. LIST	QUANTITY	PIPE O. D. (see note)	MIDDLE RING B	MIDDLE RING T	FLANGE SIZE	FLANGE CLASS
		414		49.907	10 11/16" ±	*	48	D

SPECIFICATIONS

1. COUPLINGS SHALL BE SMITH BLAIR NO. 913, BAKER NO. 602, OR EQUAL.

2. MATERIALS:
   - MIDDLE RING: MANUFACTURES STD
   - FOLLOWER: "
   - BOLTS: "
   - NUTS: "
   - GASKET: "

3. PAINT OR COATING:
   - MIDDLE RING INSIDE: 16 MILS MIN. COAL TAR EPOXY, BITUMASTIC 300-M OR AMERCOAT #78
   - MIDDLE RING OUTSIDE: 8 MILS MIN COAL TAR EPOXY, BITUMASTIC 300-M OR AMERCOAT #78
   - FOLLOWER: "
   - BOLTS: CADMIUM PLATED ASTM A165
   - NUTS: " " "

NOTE: PIPE O. D. INCLUDES PAINT APPLIED TO PIPE END

Ameron PIPE PRODUCTS GROUP

RUSSIAN RIVER - CONTRACT #1

SYMBOL	REVISION	DATE	BY	APPV'D.

DRAWN	KW	1-12-76
CHECKED		
APPV'D.		

FLANGED COUPLING ADAPTERS

2314 4B5.0

60-4-102.128.147

1000 1004 (8/70)

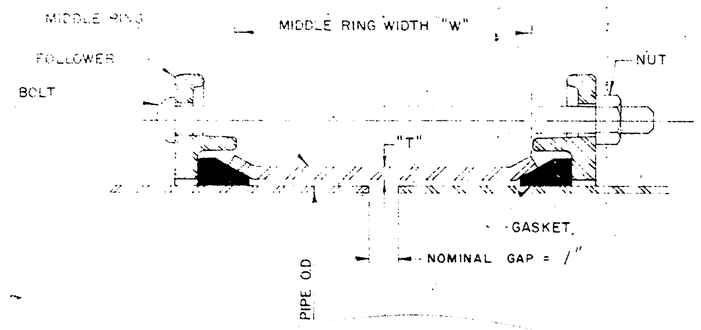

FLEXIBLE COUPLINGS

PIECE NO.	SHEET NO.	MAT'L LIST NO.	QUANTITY	PIPE O.D.	MIDDLE RING "W"	MIDDLE RING "T"
		13	1	6.057	5"	1/4

SPECIFICATIONS

1. COUPLINGS SHALL BE SMITH-BLAIR NO. 411, BAKER SERIES 200, DRESSER STYLE 38 OR EQUAL.
2. MATERIALS:
   - MIDDLE RING: MANUFACTURERS STD.
   - FOLLOWERS: " "
   - GASKET: " "
   - BOLTS: " "
   - NUTS: " "
3. PAINT OR COATING:
   - MIDDLE RING: OUTSIDE 8 MILS { COAL TAR EPOXY, BITUMASTIC 300M OR AMERCOAT #78 / INSIDE 16 MILS
   - FOLLOWERS: 8 MILS { " "
   - BOLTS: CADMIUM PLATED ASTM A164
   - NUTS: " " " "

REV.	DATE	BY	APP'D

Ameron PIPE PRODUCTS GROUP

RUSSIAN RIVER - CONTRACT #2

DRAWN	LW	12-16-75
CHECKED		
APP'D		

60-4-102.128.148

FLAG	ITEM NO.	QUANTITY THIS DWG.	DESCRIPTION	MATERIAL SPECIFICATION
	1/16		6" TENSION LUGS	1

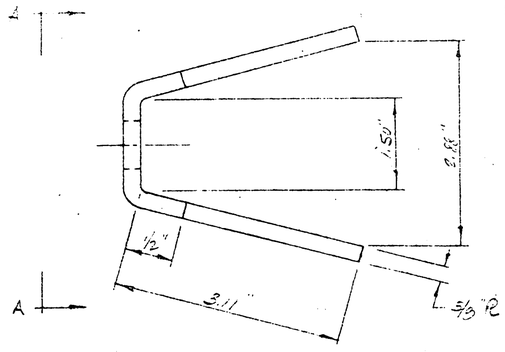

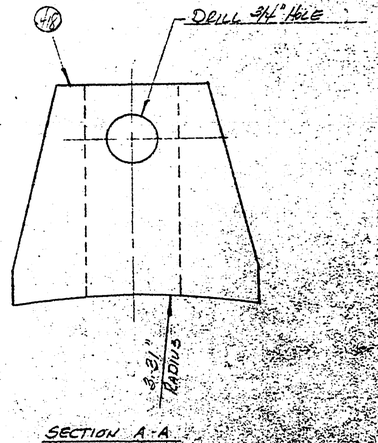

SECTION A-A

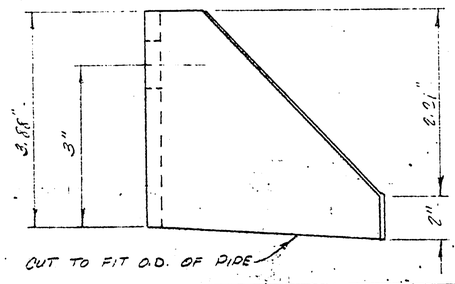

CUT TO FIT O.D. OF PIPE

CHANGE ORDERS	SYMBOL	REVISION	DATE	BY	APPV'D.

UNLESS OTHERWISE SPECIFIED DIMENSIONS ARE IN INCHES

TOLERANCES

FRACT.	.X	.XX	.XXX	ANGLE
±	±	±	±	±

DWG. SCALE

Ameron PIPE PRODUCTS GROUP

RUSSIAN LINER

DRAWN	BW	12-11-75
CHECKED		
APPV'D.		

2314 87.0

60-4-102.128.149

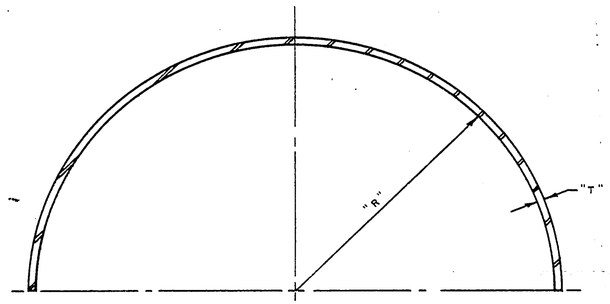

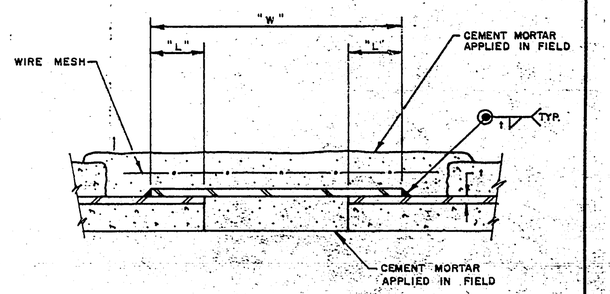

PIPE SIZE	MAT'L LIST NO	QUANTITY HALF B.S.	"T"	"W"	"R"	CUT LENGTH	"L"
48	430	2	1/4	8	24.94	78.74	2

Ameron PIPE PRODUCTS GROUP

Russian River - Contract #1

SYMBOL	REVISION	DATE	BY	APPV'D.

DRAWN	KW	1-13-76
CHECKED		
APPV'D.		

2314

4B8.0

60-4-102.128.150

FLAG	ITEM NO	QUANTITY THIS DWG	DESCRIPTION	MATERIAL SPECIFICATION
		–	49.875" O.D. CYL.	

(554) CLASS 200 10GA.
(555) CLASS 300 3/16 R
(556) CLASS 440 4GA.

* W/CUT SPIGOT SEE SHT. 20

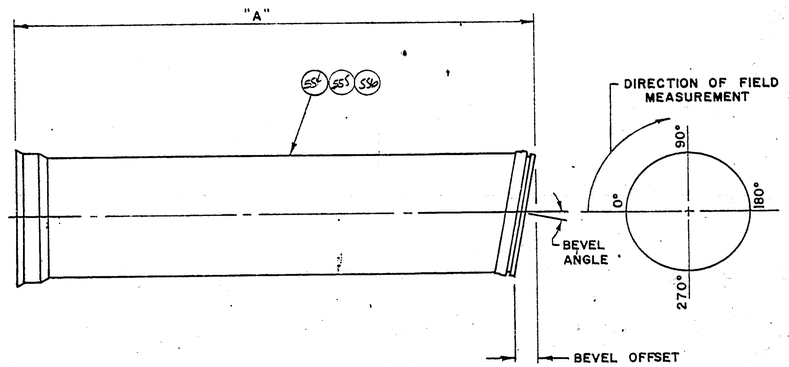

P.C. NO.	CUT SECT.	CLASS	"A"	BEVEL ANGLE	BEVEL OFFSET	F.T. LOCATION ANGULAR	F.T. LOCATION CIRCUM.	REF. SHT.
874	–	200	41-3.25"	1°54'	1.65	90	–	SFS.
884	–			1°59'	1.73	90	–	–
887	–			2°44'	2.45	270	–	–
889	–			3°45'	3.27	270	–	–
947	–	440		2°30'	2.18	270	–	–
949	–			2°54'	2.53	270	–	–
953	–			3°41'	3.21	90	–	–
955	–	300		4°30'	3.93	270	–	–
957	–			4°21'	3.79	270	–	–
958	–			4°43'	4.12	90	–	–
961	–			2°37'	2.28	90	–	–
962	–			2°26'	2.12	90	–	–
* 965	–			5°00'	4.36	90	–	–
968	–			3°29'	3.04	270	–	–
970	–			2°53'	2.51	90	–	–
974	–			2°00'	1.83	270	–	–
984	–	440		1°50'	1.60	270	–	–
991	–			1°53'	1.64	0	–	–
995	–			2°56'	2.56	0	–	–
998	–			3°25'	2.98	270	–	–

Special

CHANGE ORDERS	SYMBOL	REVISION	DATE	BY	APPV'D.

UNLESS OTHERWISE SPECIFIED DIMENSIONS ARE IN INCHES
TOLERANCES

FRACT.	.X	XX	XXX	ANGLE
±	±	±	±	±

DWG. SCALE

Ameron PIPE PRODUCTS GROUP

RUSSIAN RIVER - CONTRACT #1

DRAWN	LW	1-24-76
CHECKED		
APPV'D.		

2344 SFI 0

60-4-102.128.151

BMI

MARK	QTY	FACTORY INSTALL	DESCRIPTION	MATERIAL SPECIFICATION
556	–		49.875" O.D. x 4GA. CYL.	

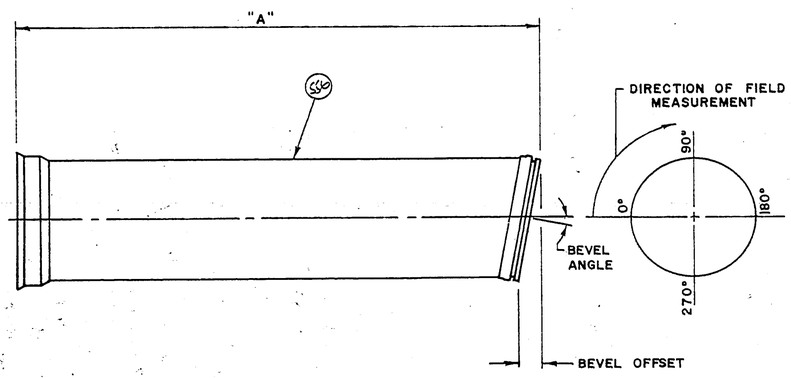

* w/CUT SPIGOT SEE SHT. 20

	P.C. NO.	CUT SECT.	CLASS	"A"	BEVEL ANGLE	BEVEL OFFSET	F.T. LOCATION ANGULAR	F.T. LOCATION CIRCUM.	REF. SHT.
	1002	–	40	41'-3.25"	3°20'	2.90	90	–	–
	1018	–			1°21'	1.18	90	–	–
1	1030	–			~~4°30'~~ 4°24'	~~4.04~~ 3.84	90	–	–
1	~~1031~~	~~30~~		~~23'-2.25"~~	~~2°24'~~	~~1.80~~	~~270~~	–	~~SHT.~~
	1048	–		41'-3.25"	2°35'	1.25	90	–	–
	1050	–			3°48'	3.31	270	–	–
	1056	–			1°52'	1.63	90	–	–
	1060	–			1°24'	1.22	270	–	–
*	1064	–			5°00'	4.36	270	–	–
	1068	–			3°48'	3.31	90	–	–
	1070	–	↓	↓	4°42'	4.10	90	–	–

CHANGE ORDERS	SYMBOL	REVISION	DATE	BY	APP'D
	1	Change Bevel & Ref. to 1030 Elim. Pc 1031	4-24-96	RAT	

UNLESS OTHERWISE SPECIFIED DIMENSIONS ARE IN INCHES
TOLERANCES
FRACT ± | .X ± | XX ± | XXX ± | ANGLE ±

DWG. SCALE

Ameron PIPE PRODUCTS GROUP

RUSSIAN RIVER – CONTRACT #1

DRAWN	KW	1-24-96
CHECKED		
APP'D.		

2314 SHT. 1

60-4-102.128.152

FLAG	ITEM NO.	QUANTITY REQUIRED	DESCRIPTION	MATERIAL SPECIFICATION
			49.875" O.D. CYLINDER	

(557) CLASS 260 10GA.
(558) CLASS 320 8GA.
(559) CLASS 360 3/16" PL
(560) CLASS 440 4GA.

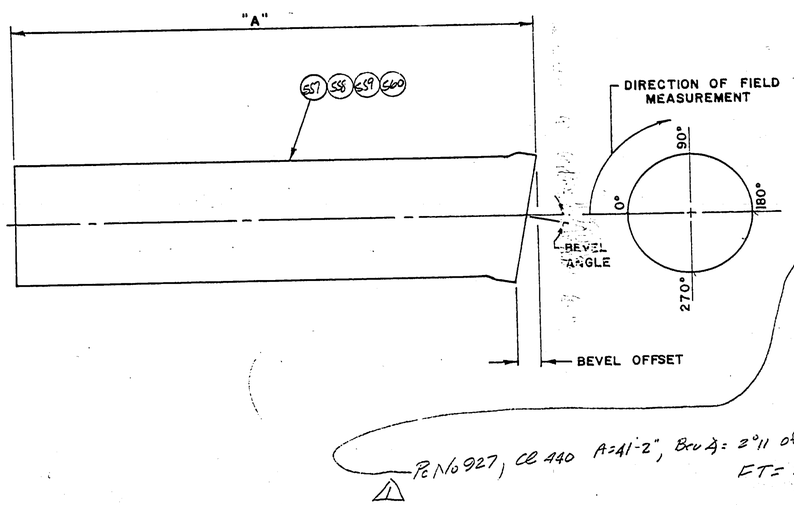

△1 Pc No 927, Cl 440 A=41'-2", Bev ∠: 2°11 offset=1.90 FT= 270°

P.C. NO.	CUT SECT.	CLASS	"A"	BEVEL ANGLE	BEVEL OFFSET	F.T. LOCATION ANGULAR	F.T. LOCATION CIRCUM.	REF. SHT.
895	–	260	41'-2"	4°16'	3.72"	90	–	SF9
901	–	↓		3°40'	3.20"	90	–	–
903	–	320		2°54'	2.53"	270	–	SF11
911	–	↓		2°12'	1.92"	90	–	SF11
922	–	360		3°51'	3.36"	90	–	–
923	–			5°00'	4.36"	90	–	–
925	–	↓		1°33'	1.35	270	–	–
△1 926	–	440		3°10	2.76	270	–	SF11
△1 928	–			1°57'	1.61	270	–	–
929	–			1°36'	1.39	270	–	–
931	–			4°10'	3.63	215°41'	93.87	SF12
932	–			1°31'	1.32	270	–	SF9
1075	–			2°26'	2.12	270	–	SF26
1076	–			1°15'	1.09	270	–	–
1089A	–		↓	4°37'	4.03	90	–	–
1091	31		34'-6.46"	5°00'	4.36	270	–	–
1093	–		41'-2"	3°29'	3.04	270	–	–
1095	–			3°29'	3.04	90	–	–
1103	–			1°43'	1.49	270	–	–
1107	–	↓	↓	1°42'	1.48	90	–	–

Ameron PIPE PRODUCTS GROUP

RUSSIAN RIVER - CONTRACT #1

CHANGE ORDERS	SYMBOL	REVISION	DATE	BY	APPV'D
	△1	Change Bev ∠ for Pc 926, 928 Add Pc 927			

UNLESS OTHERWISE SPECIFIED DIMENSIONS ARE IN INCHES

TOLERANCES

FRACT.	.X	.XX	.XXX	ANGLE
±	±	±	±	±

DWG. SCALE

DRAWN KW 1-24-76
CHECKED
APPV'D.

2314 SF3.d

60-4-102.128.153

1000-1000 (8/70)

FLAG	ITEM NO.	QUANTITY THIS DWG.	DESCRIPTION	MATERIAL SPECIFICATION
	—	—	49.875" O.D. CYLINDERS	

STANDARD SECTIONS w/ CUT SPIGOT (SEE SHT. 20)

Pc. No.	LAYOUT REF.	Pc. No.	LAYOUT REF.	Pc. No.	LAYOUT REF.
1014	5L7				

CHANGE ORDERS	SYMBOL	REVISION	DATE	BY	APPV'D.

UNLESS OTHERWISE SPECIFIED DIMENSIONS ARE IN INCHES

TOLERANCES

FRACT.	.X	.XX	.XXX	ANGLE
±	±	±	±	±

DWG. SCALE

Ameron PIPE PRODUCTS GROUP

RUSSIAN RIVER - CONTRACT #1

DRAWN	KW	1-24-76
CHECKED		
APPV'D.		

2314 SF40

60-4-102.128.154

1000-1000 (R-10)

FLAG	ITEM NO.	QUANTITY THIS DWG.	DESCRIPTION	MATERIAL SPECIFICATION
	554 555 556	82	49.875" O.D. CYLINDER	
	551	2	38.25" O.D. x 1/4" R COLLAR Roll To 24.94" R	ASTM A-283 GR C
	56	2	18" CL. "D" SKIRTED FLG. SEE SHT. SB1	
*	552	2	38.25" O.D. x 5/16" R COLLAR Roll To 24.94" R	

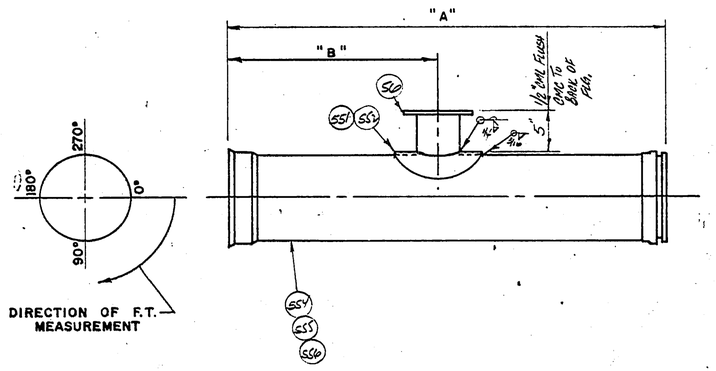

PC. NO.	CUT SECT.	CLASS	"A"	"B"	FT. LOCATION ANGULAR	FT. LOCATION CIRCUM.	REF. SHT.
874	–	260	41'-3.25"	28'-5.28	270	–	SF1
964	–	360	"	5'-0"	270	–	–
* 1041	–	440	"	2'-9.96"	270	–	–
* 1069	–	440	"	3'-11.76	270	–	–

special

Ameron PIPE PRODUCTS GROUP

RUSSIAN RIVER - CONTRACT #1

UNLESS OTHERWISE SPECIFIED DIMENSIONS ARE IN INCHES

TOLERANCES

FRACT	X	XX	XXX	ANGLE
±	±	±	±	±

DRAWN KW 1-24-76

CHECKED

APPV'D.

DWG. SCALE

CHANGE ORDERS	SYMBOL	REVISION	DATE	BY	APPV'D

2314

60-4-102.128.155

1000 1000 5 70

FLAG	ITEM NO.	QUANTITY THIS DWG.	DESCRIPTION	MATERIAL SPECIFICATION
	546	2'-6" =	8" SCH. 40 STEEL PIPE	
	52	1	8" x 150# SLIP-ON FLG. F.F.	
	514	1	18" Cl "D" BLIND FLG. 4/3.69 I.D. HOLE SEE SMT. 563	

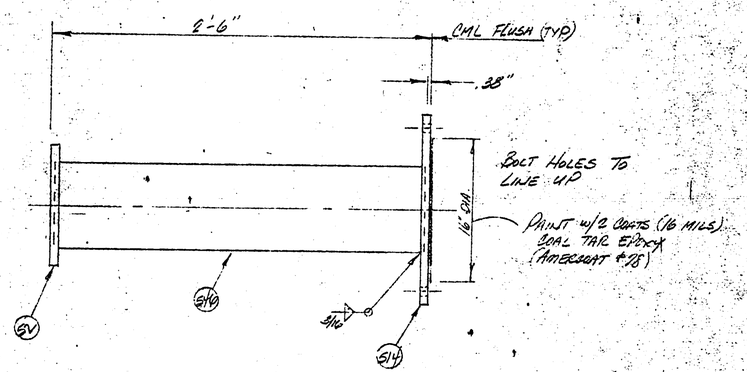

Pc. No.	LAYOUT REF
874A	54

EXTERIOR BARE
CML = 1/4"

CHANGE ORDERS	SYMBOL	REVISION	DATE	BY	APPV'D

UNLESS OTHERWISE SPECIFIED DIMENSIONS ARE IN INCHES

TOLERANCES

FRACT.	X	XX	XXX	ANGLE
±	±	±	±	±

DWG. SCALE

Ameron PIPE PRODUCTS GROUP

RUSSIAN RIVER - CONTRACT #1

DRAWN	[illegible]	22-70
CHECKED		
APPV'D		

2314

60-4-102.128.156

1000-1000 (8/70)

SF1

FLAG	ITEM NO.	QUANTITY THIS DWG.	DESCRIPTION	MATERIAL SPECIFICATION
	144	21'-3.96"	49.875 O.D. x 10GA CYL.	
	P1	1	48" BELL RING.	

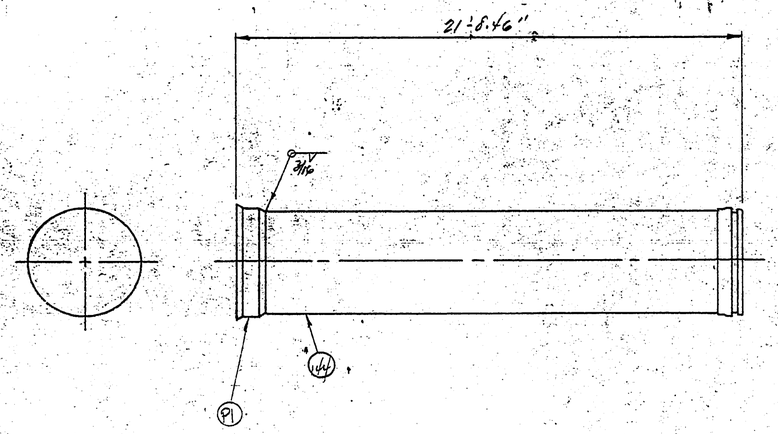

CLASS 200
CMC .75
CML .75
CUT SCH. 10

888
54

CHANGE ORDERS	SYMBOL	REVISION	DATE	BY	APP'D

UNLESS OTHERWISE SPECIFIED DIMENSIONS ARE IN INCHES
TOLERANCES
FRACT ± | .X ± | .XX ± | .XXX ± | ANGLE ±

DWG. SCALE

Ameron FIPE PRODUCTS GROUP

Lussim River - Contract #1

DRAWN	KW	12-2-76
CHECKED		
APP'D		

2314 SF7.0

60-4-102.128.157

1000 1000 (8-70)

BMI

I-CUT

FLAG	ITEM NO.	QUANTITY THIS DWG	DESCRIPTION	MATERIAL SPECIFICATION
	SS7	41'-2"	49.875" O.D. x 10GA CYL	
	P2	1	48" SPIGOT RING	

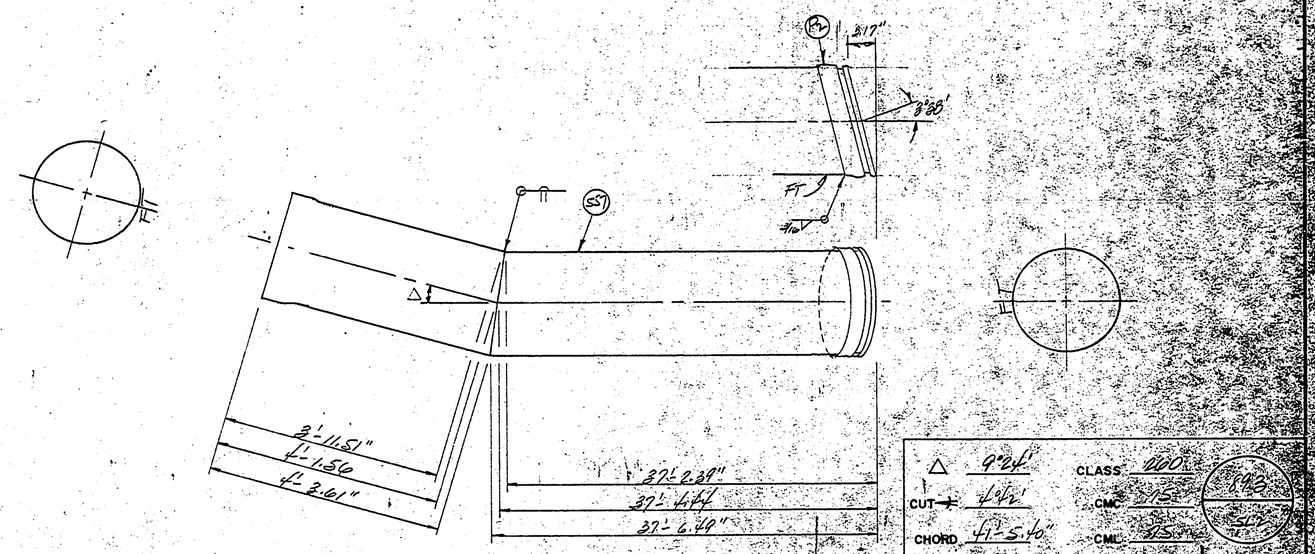

△	9°24'	CLASS	200
CUT	4°42'	CMC	75
CHORD	41'-5.40"	CML	75

893
SL2

Ameron PIPE PRODUCTS GROUP

Russian River - Contract #1

CHANGE ORDERS	SYMBOL	REVISION	DATE	BY	APPV'D.

UNLESS OTHERWISE SPECIFIED DIMENSIONS ARE IN INCHES.

TOLERANCES

FRACT.	X	XX	XXX	ANGLE
±	±	±	±	±

DWG. SCALE

DRAWN	KW	1-24-76
CHECKED		
APPV'D.		

2314

SF8.0

60-4-102.128.158

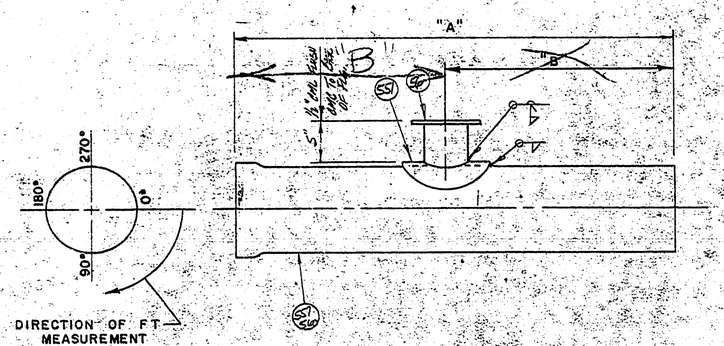

FLAG	ITEM NO	QUANTITY THIS DWG	DESCRIPTION	MATERIAL SPECIFICATION
	557 560	123	49.875" O.D. CYL.	
	56	3	18" CL. "D" SKIRTED FLG. SEE SHT. 5B1	
	551	3	38.25" O.D. x 1/4" R COLLAR Low To 24.74 R	ASTM A-283 GRC

PC. NO.	CUT SECT.	CLASS	"A"	"B"	F.T. LOCATION ANGULAR	F.T. LOCATION CIRCUM.	REF. SHT.
895	—	260	41'-2"	8'-10.20"	270	—	5F3
932	—	440	"	15'-4.08"	270	—	5F3
1188	—	440	"	37'-6.48"	270	—	—

CHANGE ORDERS	SYMBOL	REVISION	DATE	BY	APPV'D

UNLESS OTHERWISE SPECIFIED DIMENSIONS ARE IN INCHES

TOLERANCES

FRACT	.X	.XX	.XXX	ANGLE
±	±	±	±	±

DWG. SCALE

Ameron PIPE PRODUCTS GROUP

Russian River - Contract #1

DRAWN	KW	2-2-76
CHECKED		
APPV'D		

2314 5F2.0

60-4-102.128.159

1000 1000 18 701

5/10

FLAG	ITEM NO.	QUANTITY THIS DWG.	DESCRIPTION	MATERIAL SPECIFICATION
	511	2	18"ØL "D" BLIND FLG. SEE SHT 582	
	51	2	4"x 150# SLIP-ON FLG. F.F.	
	544	10"	4" STD WT. STEEL PIPE	

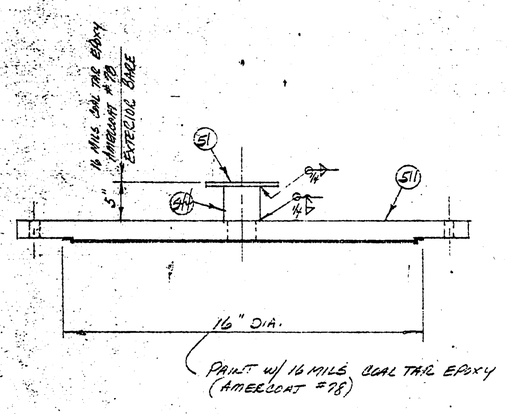

Pc. No.	LAYOUT REF.
895A	542
964A	545

CHANGE ORDERS	SYMBOL	REVISION	DATE	BY	APPV'D.

UNLESS OTHERWISE SPECIFIED DIMENSIONS ARE IN INCHES

TOLERANCES				
FRACT.	.X	.XX	.XXX	ANGLE
±	±	±	±	±

DWG. SCALE

Ameron PIPE PRODUCTS GROUP

RUSSIAN RIVER - CONTRACT #1

DRAWN	LW	2-2-76
CHECKED		
APPV'D.		

231F SF10.0

60-4-102.128.160

1004-1000 (8/70)

FLAG	ITEM NO.	QUANTITY THIS DWG.	DESCRIPTION	MATERIAL SPECIFICATION
	558 560	369	49.875" O.D. CYL	
	518	9	2"x3000# THREDOLET	
	547	9	3/16"R x 6" SQ. COLLAR ROLL TO 24.94"R	

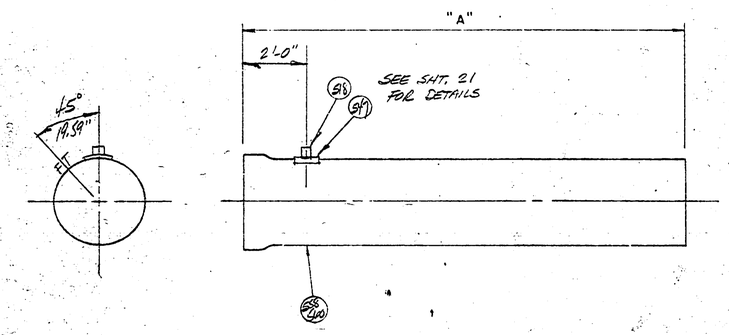

PC. NO.	CUT SECT.	CLASS	"A"			REF. SHT.
903	—	320	41'-2"			5F3
911	—	320				5F3
919	—	320				—
926	—	440				5F3
1082	—	440				—
1097	—	440				—
1105	—	440				—
1113	—	440				—
1191	—	440				—

CHANGE ORDERS	SYMBOL	REVISION	DATE	BY	APPV'D

UNLESS OTHERWISE SPECIFIED DIMENSIONS ARE IN INCHES

TOLERANCES

FRACT.	X	XX	XXX	ANGLE
±	±	±	±	±

DWG. SCALE

Ameron PIPE PRODUCTS GROUP

RUSSIAN RIVER - CONTRACT #1

DRAWN	KW	1-24-76
CHECKED		
APPV'D		

23.14

5F11.0

60-4-102.128.161

1000 1000 (8-70)

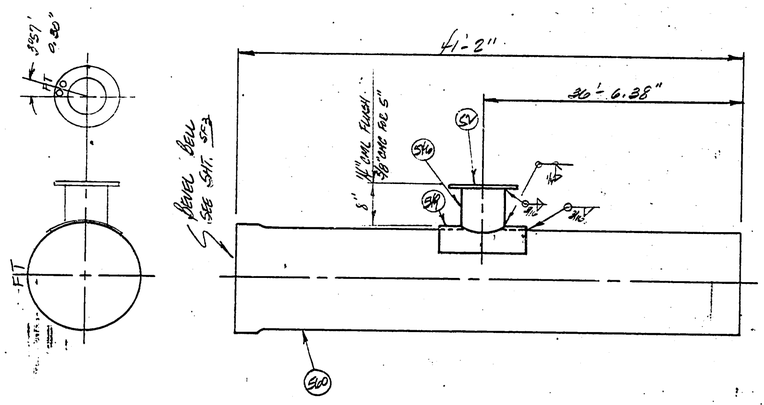

FLAG	ITEM NO.	QUANTITY THIS DWG.	DESCRIPTION	MATERIAL SPECIFICATION
	560	41'-2"	49.875" O.D. x 4GA. CYL.	
	549	1	16" SQ x 5/16" PL COLLAR ROLL TO 24.94" R.	
	52	1	8" x 150# SLIP-ON FLG.	
	546	9"	8" SCH. 40 STEEL PIPE	

CLASS 440
CMC .75
CML .75
931
544

Ameron PIPE PRODUCTS GROUP

RUSSIAN RIVER - CONTRACT #1

CHANGE ORDERS	SYMBOL	REVISION	DATE	BY	APPV'D

UNLESS OTHERWISE SPECIFIED DIMENSIONS ARE IN INCHES

TOLERANCES

FRACT.	.X	XX	.XXX	ANGLE
±	±	±	±	±

DWG. SCALE

DRAWN	KW	2-2-76
CHECKED		
APPV'D.		

2314 5F120

60-4-102.128.162

1000 1-00 S. 701

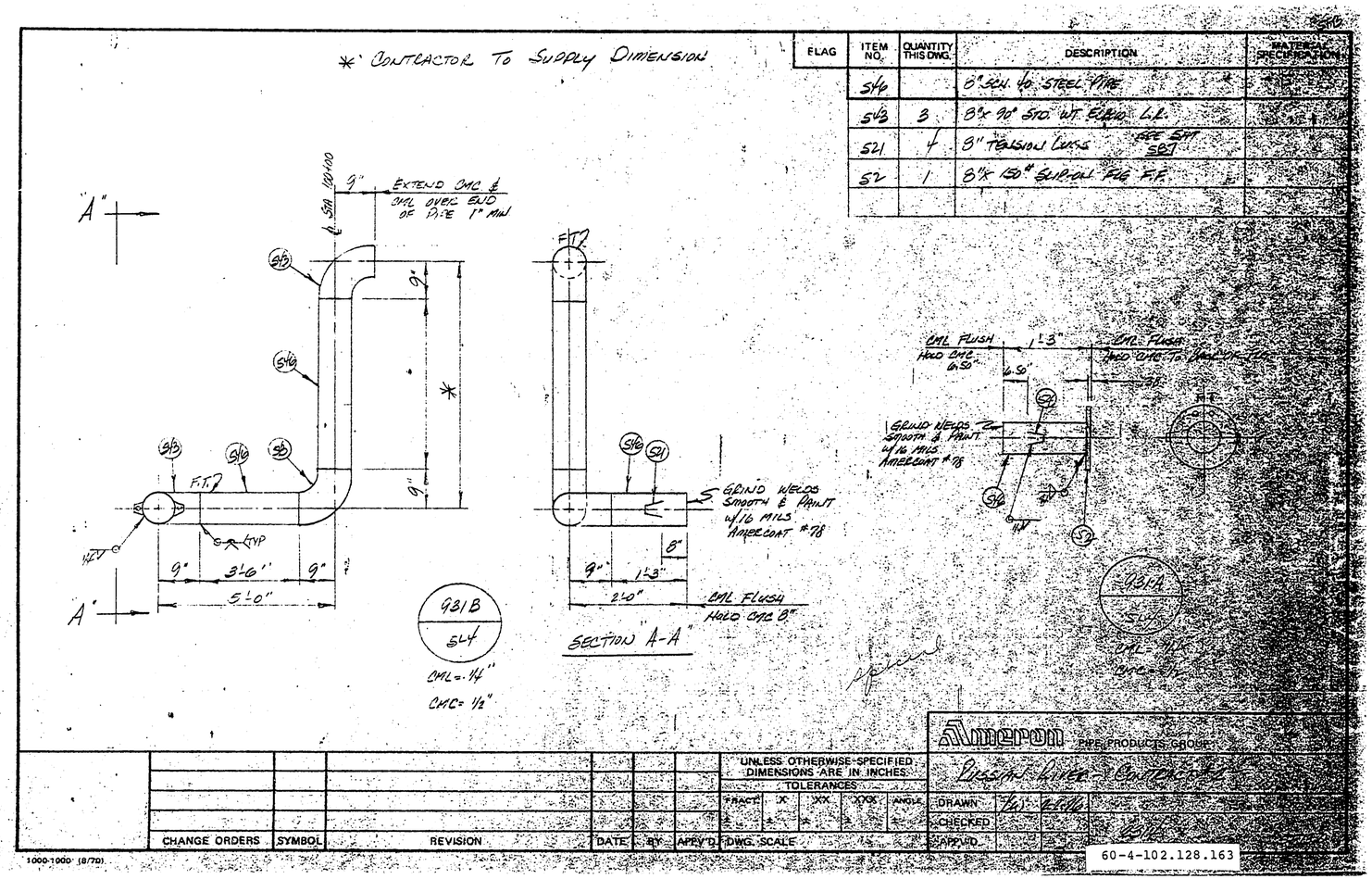

CHANGE ORDERS	SYMBOL	REVISION	DATE	BY	APPV'D

UNLESS OTHERWISE SPECIFIED DIMENSIONS ARE IN INCHES

TOLERANCES

FRACT.	X	XX	XXX	ANGLE
±	±	±	±	±

DWG. SCALE

Ameron PIPE PRODUCTS GROUP

Russian Liver - Contract #2

DRAWN	[illegible]	[illegible]
CHECKED		
APPV'D		

60-4-102.128.163

1000-1000 (8/70)

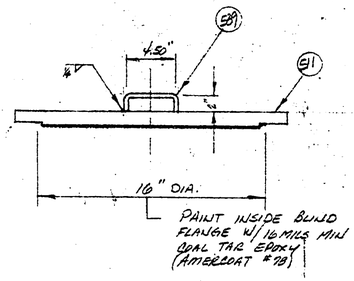

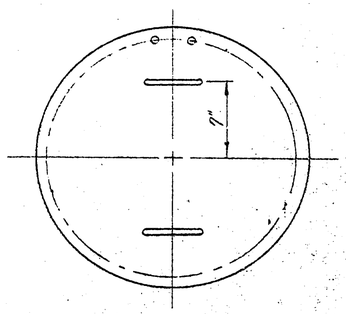

FLAG	ITEM NO.	QUANTITY THIS DWG.	DESCRIPTION	
	511	4	18" CL'D BLIND FLG. SEE SHT 582	
	589	6	1/2" ϕ ROD HANDLES	

Pc. No.	LAYOUT REF.
932A	5L4
1041A	5L8
1186A	5L13
1188A	5L13

CHANGE ORDERS	SYMBOL	REVISION	DATE	BY	APPV'D

UNLESS OTHERWISE SPECIFIED DIMENSIONS ARE IN INCHES
TOLERANCES
FRACT. ± X ± XX ± XXX ± ANGLE ±
DWG. SCALE

Ameron PIPE PRODUCTS GROUP
RUSSIAN RIVER - CONTRACT #
DRAWN
CHECKED
APPV'D

60-4-102.128.164

1000-1000 (8/70)

FLAG	ITEM NO	QUANTITY THIS DWG.	DESCRIPTION	MATERIAL SPECIFICATION
	556	40'-10.25"	49.875" O.D. x 46A. CYL.	

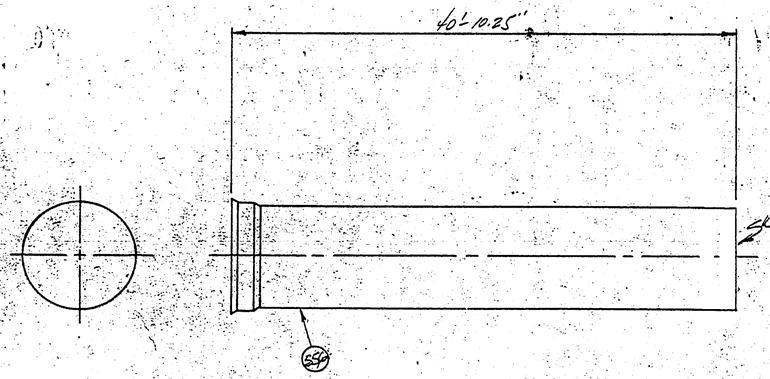

special

CLASS 40
CMC. .175
CML .175

933
314

Ameron PIPE PRODUCTS GROUP

RUSSIAN RIVER - CONTRACT #1

CHANGE ORDERS	SYMBOL	REVISION	DATE	BY	APP'V'D.

UNLESS OTHERWISE SPECIFIED DIMENSIONS ARE IN INCHES
TOLERANCES
FRACT. ± | .X ± | XX ± | XXX ± | ANGLE ±

DRAWN BW 12-76
CHECKED
APP'V'D.

DWG. SCALE

2314

60-4-102.128.165

5715.0

1000-1000. (8-70)

I-CUT

FLAG	ITEM NO.	QUANTITY THIS DWG	DESCRIPTION	MATERIAL SPECIFICATION
	556	41'-3.25"	49.875" O.D. x 4GA. CYL.	

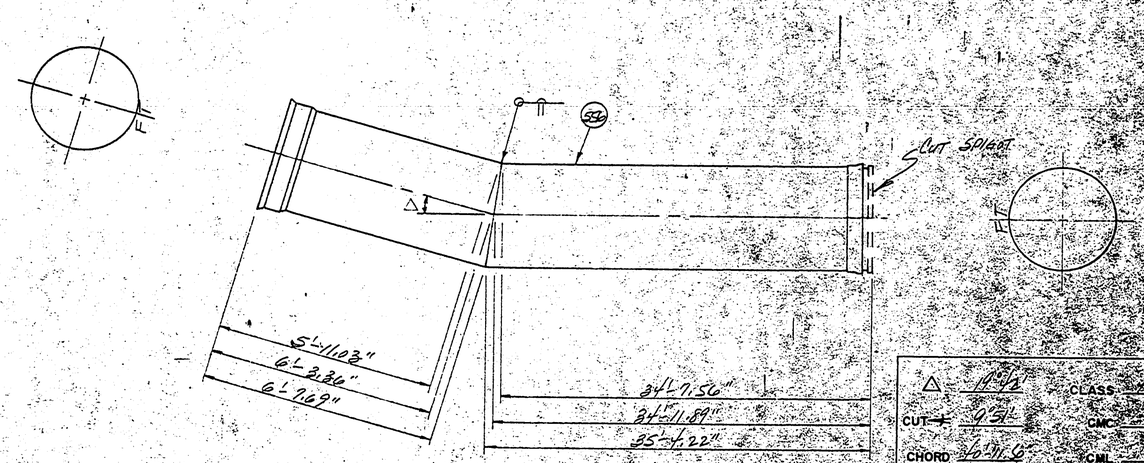

△	19°42'	CLASS	440
CUT	9°51'	CMC	.75
CHORD	40'-11.6"	CML	.75

Ameron PIPE PRODUCTS GROUP

Russian River - Contract #1

CHANGE ORDERS	SYMBOL	REVISION	DATE	BY	APPV'D

UNLESS OTHERWISE SPECIFIED DIMENSIONS ARE IN INCHES

TOLERANCES

FRACT	X	XX	XXX	ANGLE
±	±	±	±	±

DWG. SCALE

DRAWN	[illegible]	1-24-76
CHECKED		
APPV'D		

73.14

60-4-102.128.166

1000-1000 (8/70)

FLAG	ITEM NO.	QUANTITY THIS DWG.	DESCRIPTION	MATERIAL SPECIFICATION
	556	41'-3.25"	49.875" O.D. x 4GA. CYL.	
	56	1	18" CL "D" SKIRTED FLG. SEE SHT. SB1	
	552	1	38.25" O.D. x 5/16" R COLLAR RAD TO 24.94" R	

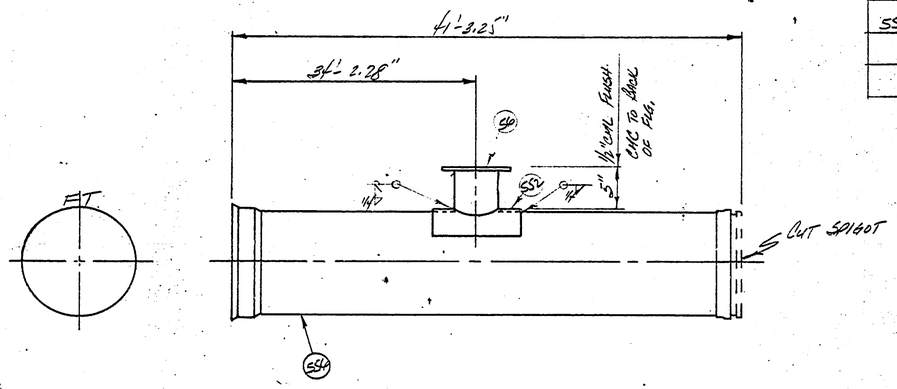

CLASS 40
CMC .75
CML .75
1013
SE7

Ameron PIPE PRODUCTS GROUP

RUSSIAN RIVER - CONTRACT #1

CHANGE ORDERS	SYMBOL	REVISION	DATE	BY	APPV'D.

UNLESS OTHERWISE SPECIFIED DIMENSIONS ARE IN INCHES

TOLERANCES

FRACT.	.X	XX	.XXX	ANGLE
±	±	±	±	±

DWG. SCALE

DRAWN	BW	2-2-76
CHECKED		
APPV'D.		

2314 SF7/10

60-4-102.128.167

1000-1000 (8/70)

FLAG	ITEM NO.	QUANTITY THIS DWG	DESCRIPTION	MATERIAL SPECIFICATION
	513	2	18" BLIND FLG. CL. "D" SEE SHT. 584	

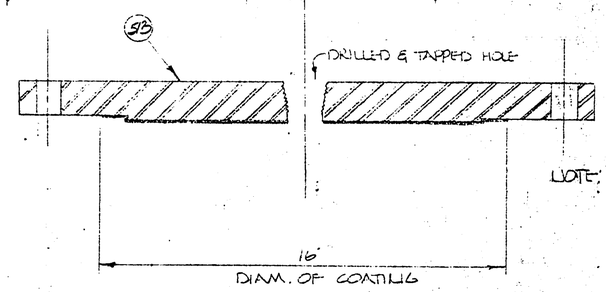

NOTE: COAT INSIDE BLIND FLG. AS SHOWN W/ 2 COATS (16 MILS) COAL TAR EPOXY - AMERCOAT #78

PC. NO.	REF. SHT.
1013A	5L7
1069A	5L9

CHANGE ORDERS	SYMBOL	REVISION	DATE	BY	APPV'D

UNLESS OTHERWISE SPECIFIED DIMENSIONS ARE IN INCHES

TOLERANCES

FRACT.	.X	.XX	.XXX	ANGLE
±	±	±	±	±

DWG. SCALE

Ameron PIPE PRODUCTS GROUP

RUSSIAN RIVER - CONTRACT #

DRAWN	LW	2-2-76
CHECKED		
APPV'D		

2314

5F18.0

60-4-102.128.168

1000-1000 (8/70)

FLAG	ITEM NO.	QUANTITY THIS DWG.	DESCRIPTION	MATERIAL SPECIFICATION
	556	23'-3.25"	49.875" O.D. x 4GA. CYL.	

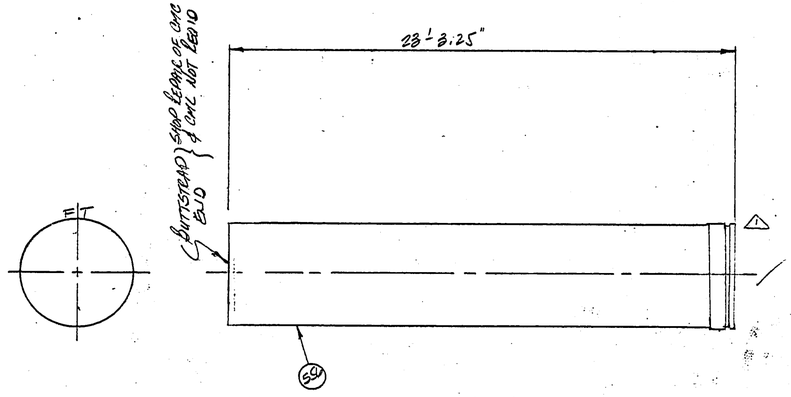

special

CLASS 440
CMC .75
CML .75
CUT SCH 30
1031
528

Ameron PIPE PRODUCTS GROUP

Russian River - Contract #1

CHANGE ORDERS	SYMBOL	REVISION	DATE	BY	APPV'D.
	△	Eliminate Bev!	9/20/76	KB	

UNLESS OTHERWISE SPECIFIED DIMENSIONS ARE IN INCHES

TOLERANCES

FRACT.	.X	.XX	.XXX	ANGLE
±	±	±	±	±

DWG. SCALE

DRAWN	KW	2-2-76
CHECKED		
APPV'D.		

2314

5F19.1

60-4-102.128.169

1000-1000 (8/70)

FLAG	ITEM NO.	QUANTITY THIS DWG.	DESCRIPTION	MATERIAL SPECIFICATION
	556	18'-0"	49.875" O.D. x 4GA. CML.	

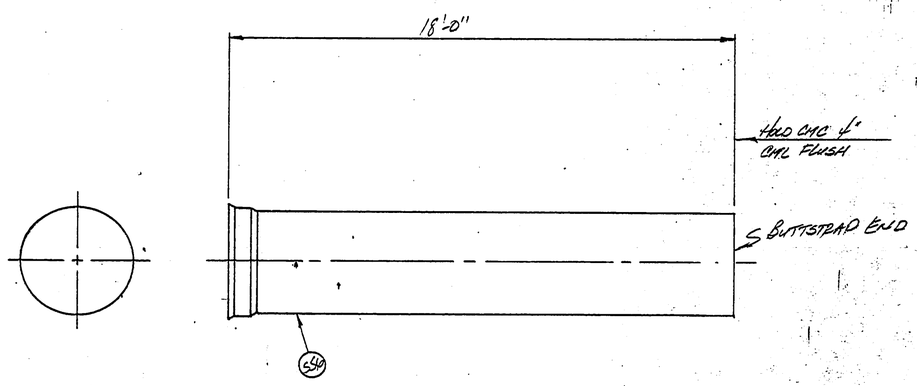

CLASS 440
CMC .75
CML .75
CS #30

1082
548

Ameron PIPE PRODUCTS GROUP

RUSSIAN RIVER - CONTRACT #1

CHANGE ORDERS	SYMBOL	REVISION	DATE	BY	APPV'D.

UNLESS OTHERWISE SPECIFIED DIMENSIONS ARE IN INCHES

TOLERANCES

FRACT.	.X	.XX	.XXX	ANGLE
±	±	±	±	±

DWG. SCALE

DRAWN	KW	2-2-76
CHECKED		
APPV'D.		

2314

SF20.0

60-4-102.128.170

1000-1000 (8/70)

FLAG	ITEM NO.	QUANTITY THIS DWG.	DESCRIPTION	MATERIAL SPECIFICATION
	S56	10'-8.97"	49.875" O.D. x 4GA. CYL.	
	P2	1	48" SPIGOT RING	

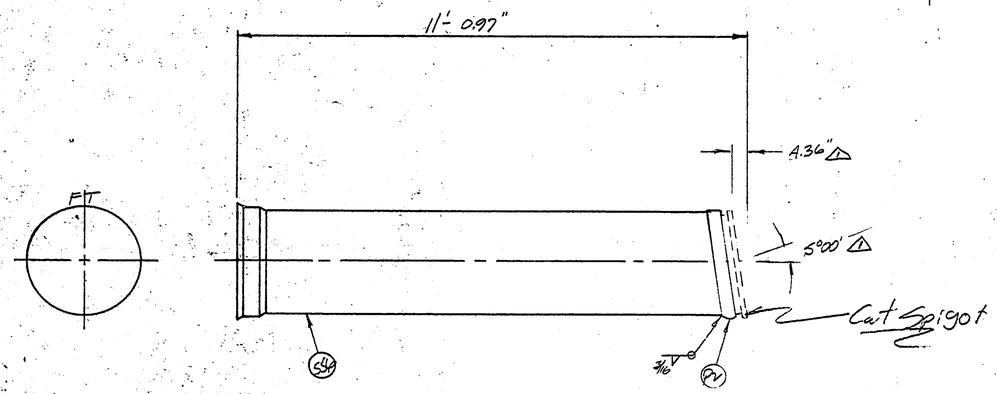

CLASS 440
CMC .75
CML .75
CS# 29

1033
S56

Ameron PIPE PRODUCTS GROUP

Russian River - Contract #1

CHANGE ORDERS	SYMBOL	REVISION	DATE	BY	APPV'D
	△1	Change Bev ∡	9/20/76	RB	

UNLESS OTHERWISE SPECIFIED DIMENSIONS ARE IN INCHES

TOLERANCES

FRACT.	.X	.XX	.XXX	ANGLE
±	±	±	±	±

DWG. SCALE

DRAWN	KW	2-2-76
CHECKED		
APPV'D		

2314

SF21.1

60-4-102.128.171

1000-1000 (8/70)

FLAG	ITEM NO.	QUANTITY THIS DWG.	DESCRIPTION	MATERIAL SPECIFICATION
	560	41'-2"	49.875" O.D. x 4GA. CYL.	
	P2	1	48" SPIGOT RING	
	520	1	1/4" PIPE COUPLING	
	541	1	1/4" PIPE PLUG	

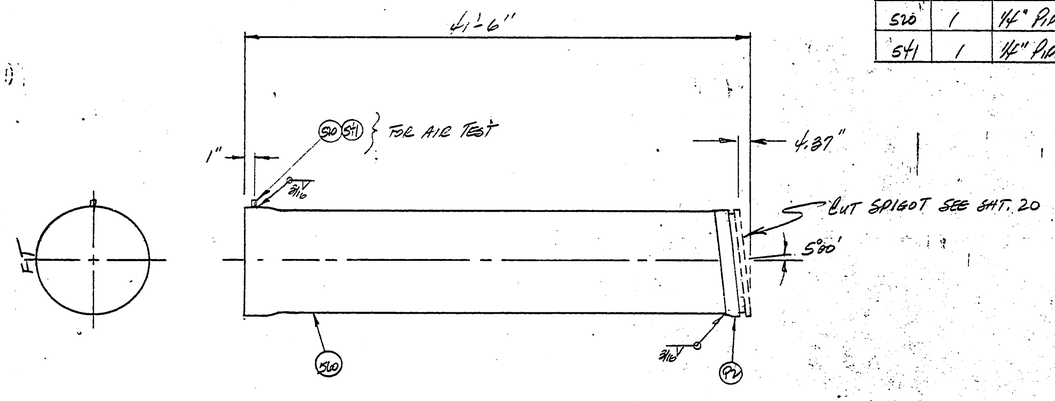

CLASS 440
CMC .75
CML .75
1034
548

Ameron PIPE PRODUCTS GROUP

Russian River - Contract #1

CHANGE ORDERS	SYMBOL	REVISION	DATE	BY	APPV'D.

UNLESS OTHERWISE SPECIFIED DIMENSIONS ARE IN INCHES

TOLERANCES

FRACT.	X	XX	XXX	ANGLE
±	±	±	±	±

DWG. SCALE

DRAWN	KW	2-2-76
CHECKED		
APPV'D.		

2314 5F22.0

60-4-102.128.172

1000 1000 5 70

FLAG	ITEM NO.	QUANTITY THIS DWG.	DESCRIPTION	MATERIAL SPECIFICATION
	556	40'-10.25"	49.875" O.D. X 4 GA. CYL.	
	53	1	12" x 150# SLIP-ON FLG.	
	545	9"	12" STD WT. STEEL PIPE	
	550	1	24" SQ X 5/16" R COLLAR ROLL TO 24.94" R.	

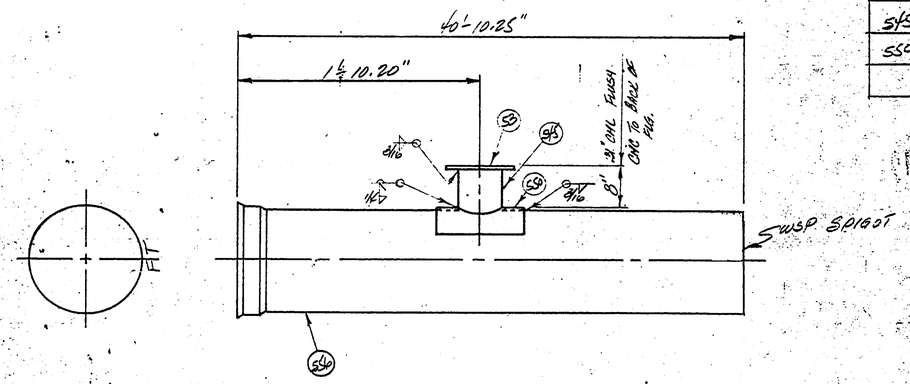

CLASS 140
CMC .75
CML .75
1035
548

Ameron PIPE PRODUCTS GROUP

Russian River - Contract #1

CHANGE ORDERS	SYMBOL	REVISION	DATE	BY	APPV'D.

UNLESS OTHERWISE SPECIFIED DIMENSIONS ARE IN INCHES.

TOLERANCES

FRACT.	.X	.XX	.XXX	ANGLE
±	±	±	±	±

DWG. SCALE

DRAWN	LO	2-2-76
CHECKED		
APPV'D.		

2314

5F23-0

60-4-102.128.173

1000-1000 (8/70)

FLAG	ITEM NO.	QUANTITY THIS DWG.	DESCRIPTION	MATERIAL SPECIFICATION
	556	41'-3.25"	49.875" O.D. x 4GA. CYL.	
	519	1	4" x 3000# THREDOLET	
	548	1	8" SQ x 5/16" R. COLLAR ROLL TO 24.94" R.	

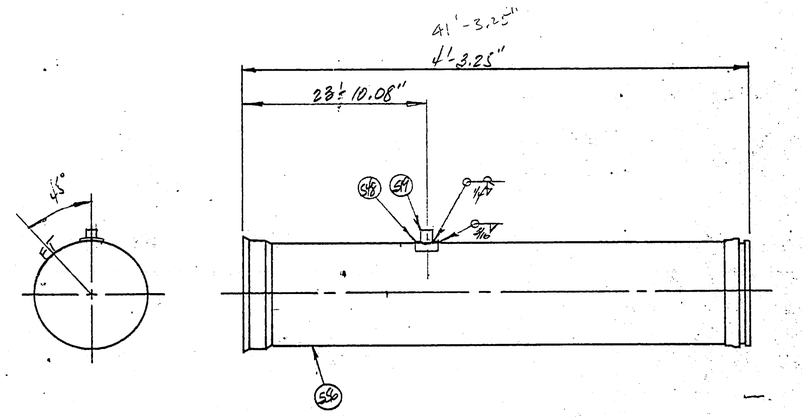

CLASS 440
CMC .75
CML .75

Ameron PIPE PRODUCTS GROUP

RUSSIAN RIVER - CONTRACT #1

CHANGE ORDERS	SYMBOL	REVISION	DATE	BY	APPV'D.

UNLESS OTHERWISE SPECIFIED DIMENSIONS ARE IN INCHES

TOLERANCES

FRACT.	.X	.XX	.XXX	ANGLE
±	±	±	±	±

DWG. SCALE

DRAWN	KW	2-2-76
CHECKED		
APPV'D.		

2314 SF240

60-4-102.128.174

1000-1000 (3-70)

FLAG	ITEM NO.	QUANTITY THIS DWG.	DESCRIPTION	MATERIAL SPECIFICATION
	S56	30'-6.28"	49.875" O.D. x 4GA. CYL.	
	P3	1	48" BELL RING	

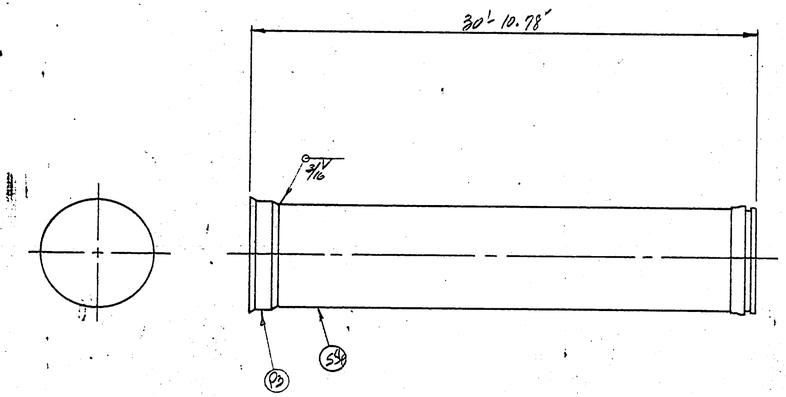

CLASS 140
CMC .75
CML .75
CS # 29

1063
S49

Ameron PIPE PRODUCTS GROUP

RUSSIAN RIVER - CONTRACT #1

CHANGE ORDERS	SYMBOL	REVISION	DATE	BY	APPV'D

UNLESS OTHERWISE SPECIFIED DIMENSIONS ARE IN INCHES

TOLERANCES

FRACT	.X	.XX	.XXX	ANGLE
±	±	±	±	±

DWG. SCALE

DRAWN	KW	2-2-76
CHECKED		
APPV'D		

2314 5F26.0

60-4-102.128.175

1000-1000 (8/70)

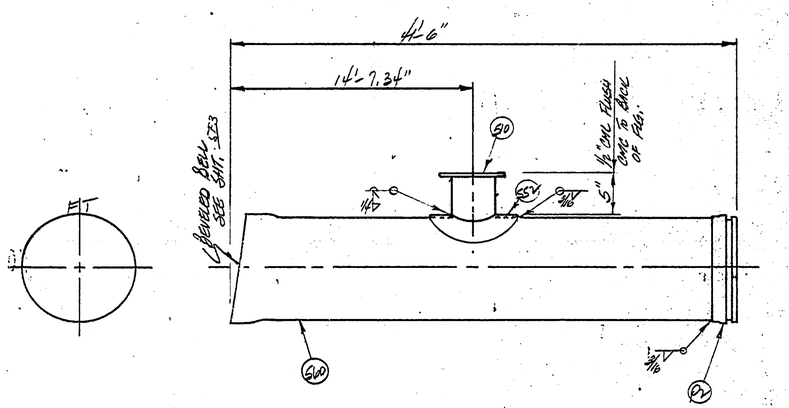

FLAG	ITEM NO.	QUANTITY THIS DWG.	DESCRIPTION	MATERIAL SPECIFICATION
	560	41'-2"	49.875" O.D. x 46A. CYL.	
	P2	1	48" SPIGOT RING	
	510	1	18" SPEC SKIRTED FLG. (2 7/8" THCK) SEE SHT. 5B1	
	552	1	38.25" O.D. x 5 1/16" R COLLAR ROLL TO 34.94" R	

CLASS 440
CMC .25
CML .75

Ameron PIPE PRODUCTS GROUP

RUSSIAN RIVER - CONTRACT #1

CHANGE ORDERS	SYMBOL	REVISION	DATE	BY	APPV'D.

UNLESS OTHERWISE SPECIFIED DIMENSIONS ARE IN INCHES

TOLERANCES

FRACT.	.X	.XX	.XXX	ANGLE
±	±	±	±	±

DWG. SCALE

DRAWN	KW	2-2-76
CHECKED		
APPV'D.		

2314 5F26.0

60-4-102.128.176

1000-1000 (8/70)

FLAG	ITEM NO.	QUANTITY THIS DWG.	DESCRIPTION	MATERIAL SPECIFICATION
	515	1	18" SPEC. BLIND FLG. w/ 12" DRILL & TAPS SEE SHT. 585	

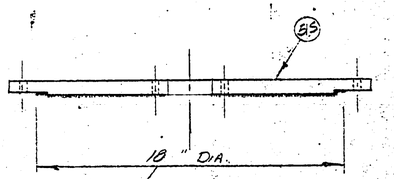

PAINT w/ 2 COATS (16 MILS)
COAL TAR EPOXY
AMERCOAT #78

1075A
540

CHANGE ORDERS	SYMBOL	REVISION	DATE	BY	APPV'D

UNLESS OTHERWISE SPECIFIED DIMENSIONS ARE IN INCHES
TOLERANCES

FRACT.	X	XX	XXX	ANGLE
±	±	±	±	±

DWG. SCALE

Ameron PIPE PRODUCTS GROUP

Russian River - Contract #

DRAWN	2-3-76	KW
CHECKED		
APPV'D		

60-4-102.128.177

1000-1000 (8/70)

FLAG	ITEM NO.	QUANTITY THIS DWG.	DESCRIPTION	MATERIAL SPECIFICATION
	545		12" STD WT STEEL PIPE	
	54		12" X 300# FLG. F.F.	
	522	2	12" TENSION LUG. SEE SHT. 5B8	
*				

* CONTRACTOR TO SUPPLY FLANGE DIMENSIONS OF VALVE & PRESSURE RELIEF VALVE

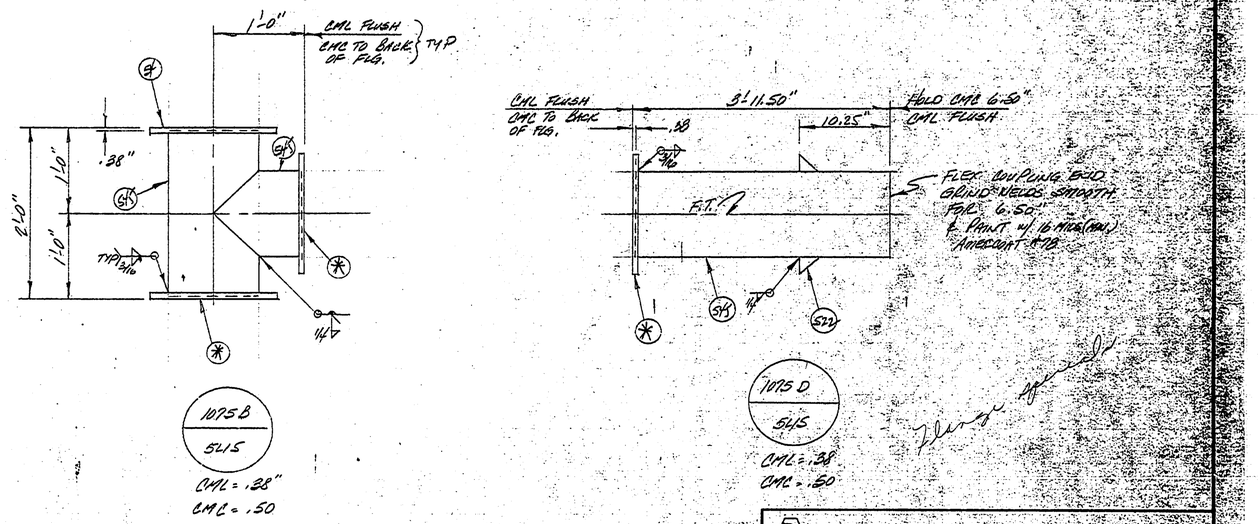

Flange specified

CHANGE ORDERS	SYMBOL	REVISION	DATE	BY	APPV'D.

UNLESS OTHERWISE SPECIFIED DIMENSIONS ARE IN INCHES

TOLERANCES

FRACT.	.X	.XX	.XXX	ANGLE
±	±	±	±	±

DWG. SCALE

Ameron PIPE PRODUCTS GROUP

RUSSIAN RIVER - CONTRACT #1

DRAWN	KW	2-3-76
CHECKED		
APPV'D.		

2314 5F28.0

60-4-102.128.178

1000-1000 (8/70)

FLAG	ITEM NO.	QUANTITY THIS DWG.	DESCRIPTION	MATERIAL SPECIFICATION
	55	1	12" x 300# BLIND FLG. w/ 2" TAPPED HOLE	

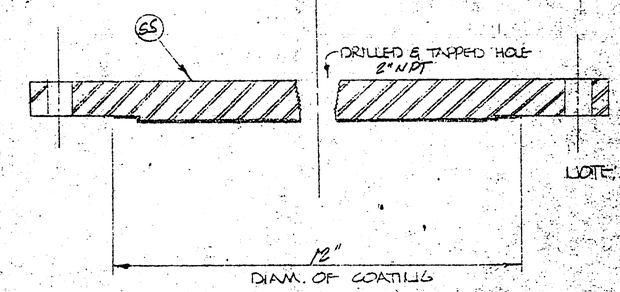

NOTE: COAT INSIDE BLIND FLG. AS SHOWN W/ 2 COATS (16 MILS) COAL TAR EPOXY - AMERCOAT #78

PC. NO.	REF. SHT.
1075C	5415

Ameron PIPE PRODUCTS GROUP

RUSSIAN RIVER - CONTRACT #1

UNLESS OTHERWISE SPECIFIED DIMENSIONS ARE IN INCHES

TOLERANCES

FRACT.	X	XX	XXX	ANGLE
±	±	±	±	±

DWG. SCALE

DRAWN	KW	2-3-76
CHECKED		
APPV'D		

CHANGE ORDERS	SYMBOL	REVISION	DATE	BY	APPV'D

1000-1000 (8/70)

60-4-102.128.179

1-CUT

FLAG	ITEM NO.	QUANTITY THIS DWG.	DESCRIPTION	MATERIAL & SPECIFICATION
	S45		12" STD WT STEEL PIPE	
	S22	2	12" TENSION LUGS SEE SHT. S38	
	S40	6'±	7/8"ϕ BAR SMOOTH	
	S38	1	1/2" PL DIFFUSER PLATE	

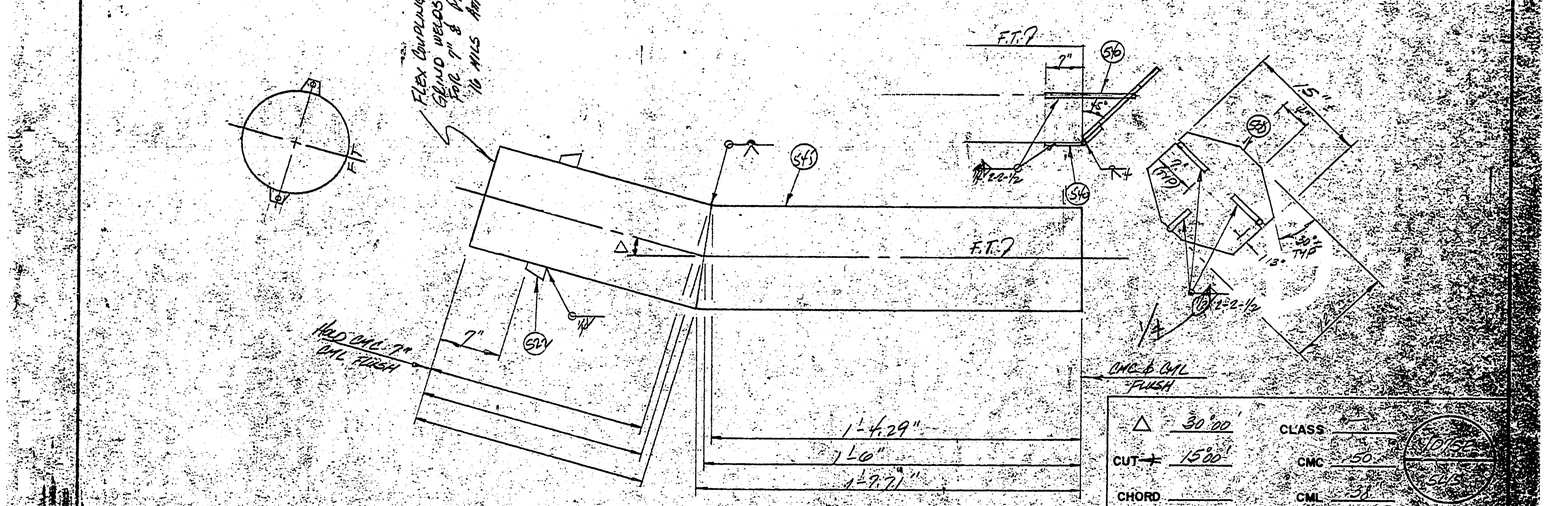

△	30°00'	CLASS	
CUT	15°00'	CMC	.50
CHORD		CML	.38

Ameron PIPE PRODUCTS GROUP

Russian River - Contract #1

UNLESS OTHERWISE SPECIFIED DIMENSIONS ARE IN INCHES

TOLERANCES

FRACT.	X	XX	XXX	ANGLE
±	±	±	±	±

DRAWN: YLD 2-3-76

CHECKED

APPV'D

DWG. SCALE

CHANGE ORDERS	SYMBOL	REVISION	DATE	BY	APPV'D

2314

60-4-102.128.180

FLAG	ITEM NO.	QUANTITY THIS DWG.	DESCRIPTION	MATERIAL SPECIFICATION
	560	4'-2"	49.875" O.D. x 4GA. CYL.	
	57	1	18" SPEC SKIRTED FLG. SEE SHT. 581	
	552	1	38.25" O.D. x 5/16" R COLLAR ROLL TO 24.84" R.	

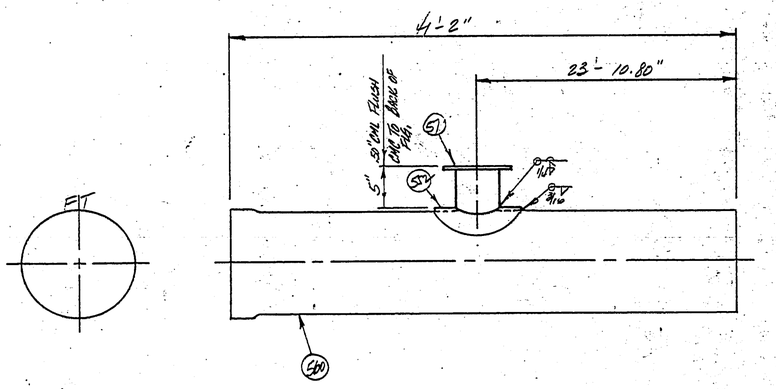

CLASS 40
CMC 75
CML 75

Ameron PIPE PRODUCTS GROUP

Russian River - Contract #1

CHANGE ORDERS	SYMBOL	REVISION	DATE	BY	APPV'D

UNLESS OTHERWISE SPECIFIED DIMENSIONS ARE IN INCHES

TOLERANCES

FRACT.	X	XX	XXX	ANGLE
±	±	±	±	±

DWG. SCALE

DRAWN	LW	2-2-76
CHECKED		
APPV'D.		

2314 SF3120

60-4-102.128.181

1000-1000 (8/70)

FLAG	ITEM NO.	QUANTITY THIS DWG.	DESCRIPTION	MATERIAL SPECIFICATION
	512	2	18" SPEC. BLIND FLG. SEE SH. 5B	
	539	3½	1/2" ø ROD HANDLES	

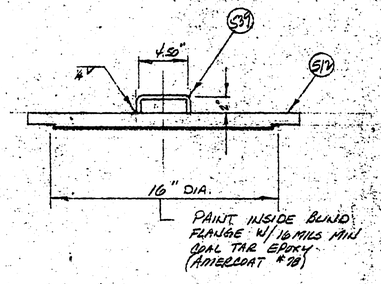

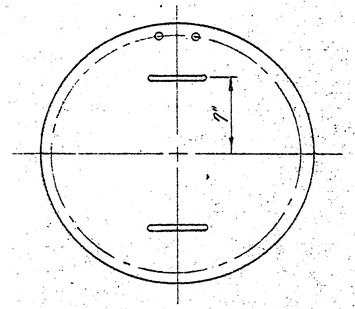

Pc. No.	LAYOUT REF.
1090A	SL10
1141A	SL12

CHANGE ORDERS	SYMBOL	REVISION	DATE	BY	APPV'D

UNLESS OTHERWISE SPECIFIED DIMENSIONS ARE IN INCHES

TOLERANCES

FRACT.	X	XX	XXX	ANGLE
±	±	±	±	±

DWG. SCALE

Ameron PIPE PRODUCTS GROUP

RUSSIAN RIVER - CONTRACT

DRAWN	KW	2-3-76
CHECKED		
APPV'D		

2314

1000-1000 (8/70)

60-4-102.128.182

5F33

FLAG	ITEM NO	QUANTITY THIS DWG.	DESCRIPTION	MATERIAL SPECIFICATION
	239	13'-0.88"	49.875" O.D. x 1/4" R CYL.	
	537	1	5/16" R x 4" WIDE BUTTSTRAP BELL ROLL TO 49.875" I.D.	

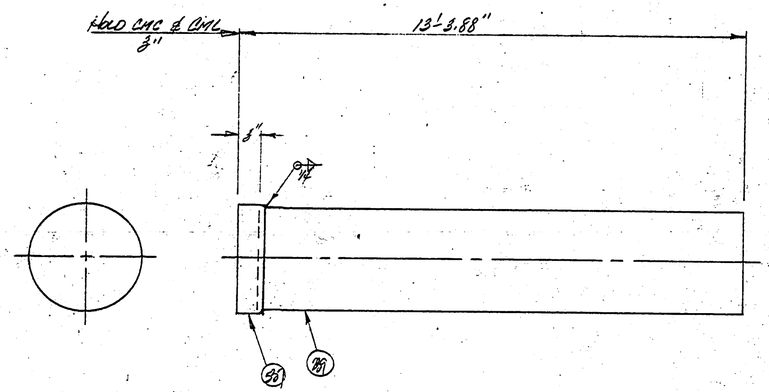

CLASS 480
CMC .75
CML .75
CS # 21

1100
SL11

Ameron PIPE PRODUCTS GROUP

RUSSIAN RIVER - CONTRACT #1

CHANGE ORDERS	SYMBOL	REVISION	DATE	BY	APPV'D

UNLESS OTHERWISE SPECIFIED DIMENSIONS ARE IN INCHES

TOLERANCES

FRACT	X	XX	XXX	ANGLE
±	±	±	±	±

DWG. SCALE

DRAWN	KW	2-2-76
CHECKED		
APPV'D.		

2314

SF33.0

60-4-102.128.183

I-CUT

FLAG	ITEM NO.	QUANTITY THIS DWG.	DESCRIPTION	MATERIAL SPECIFICATION
	560	41'-2"	49.875" O.D. x 46A. C4L	

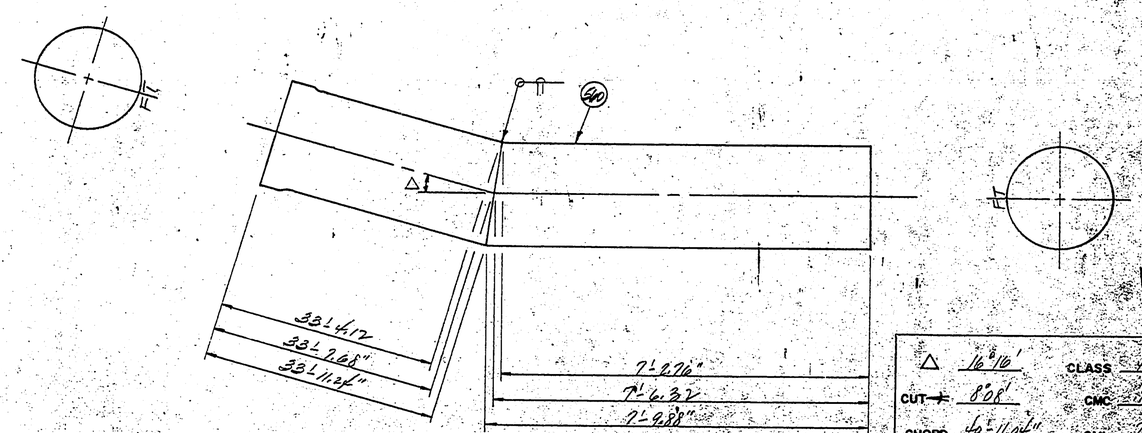

△ 16°16'
CUT ⊣ 8°08'
CHORD 40'-11.04"
CLASS 440
CMC .75
CML .75

Ameron PIPE PRODUCTS GROUP

Russian River - Contract #1

CHANGE ORDERS	SYMBOL	REVISION	DATE	BY	APPV'D

UNLESS OTHERWISE SPECIFIED DIMENSIONS ARE IN INCHES

TOLERANCES

FRACT.	X	XX	XXX	ANGLE
±	±	±	±	±

DWG. SCALE

DRAWN	KW	1-24-76
CHECKED		
APPV'D		

2314

60-4-102.128.184

1000-1000 (5/70)

FLAG	ITEM NO.	QUANTITY THIS DWG.	DESCRIPTION	MATERIAL SPECIFICATION
	556	40-10.25"	49.875"O.D. x 46A. CYL.	

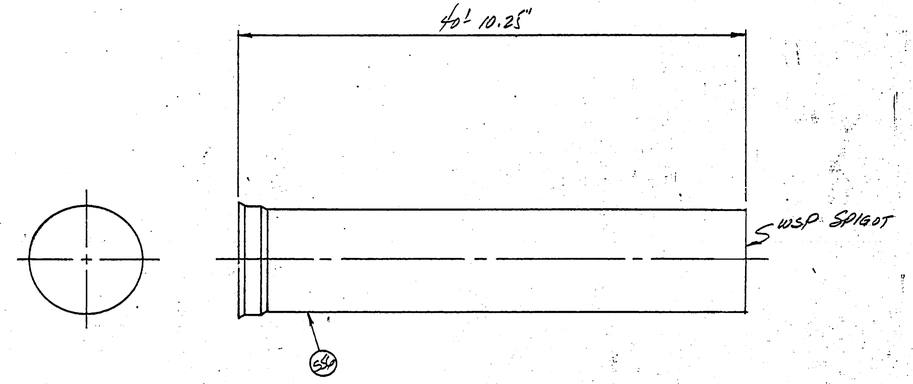

CLASS 440
CMC .195 1116
CML .75 5402

CHANGE ORDERS	SYMBOL	REVISION	DATE	BY	APPV'D.

UNLESS OTHERWISE SPECIFIED DIMENSIONS ARE IN INCHES
TOLERANCES
FRACT. ± | .X ± | .XX ± | .XXX ± | ANGLE ±

DWG. SCALE

Ameron PIPE PRODUCTS GROUP

Russian River - Contract #1

DRAWN lw 6-2-76
CHECKED
APPV'D. 2314 SF35.0

60-4-102.128.185

1000 1800 (8/70)

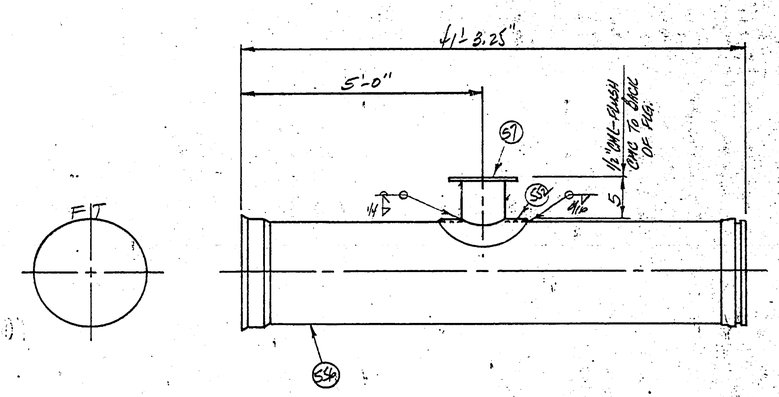

FLAG	ITEM NO.	QUANTITY THIS DWG.	DESCRIPTION	MATERIAL SPECIFICATION
	556	41'-3.25"	49.875" O.D. x 1/4 GA. CML	
	57	1	18" SPEC SKIRTED FLG. SEE SBL	
	552	1	38.25" O.D. x 5/16" ℄ COLLAR ROLL TO 24.94" R	

CLASS 4-40
CMC 45
CML 45

Ameron PIPE PRODUCTS GROUP

Russian River - Contract #1

CHANGE ORDERS	SYMBOL	REVISION	DATE	BY	APPV'D

UNLESS OTHERWISE SPECIFIED DIMENSIONS ARE IN INCHES

TOLERANCES

FRACT.	X	XX	XXX	ANGLE
±	±	±	±	±

DWG. SCALE

DRAWN	LW	22-76
CHECKED		
APPV'D		

2314

SF36.0

60-4-102.128.186

1000-1000 (8/70)

FLAG	ITEM NO	QUANTITY THIS DWG.	DESCRIPTION	MATERIAL SPECIFICATION
	560	41'-2"	49.875" O.D. x 4GA. CYL.	
	P2	1	48" SPIGOT RING	

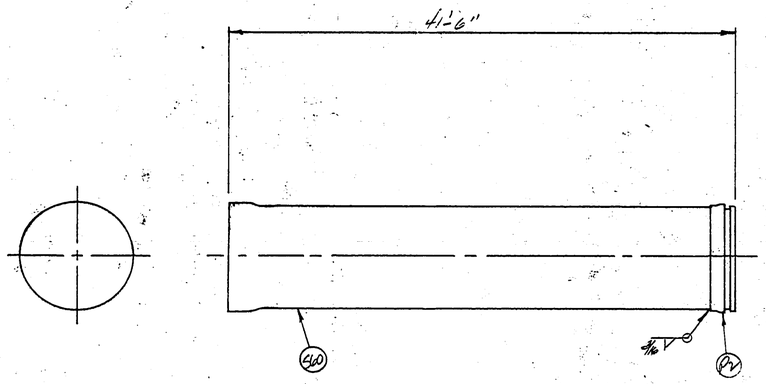

CLASS 440
CMC .75
CML .75
1179
5013

Ameron PIPE PRODUCTS GROUP

RUSSIAN RIVER – CONTRACT #1

CHANGE ORDERS	SYMBOL	REVISION	DATE	BY	APPV'D.
	△	Change Pc No From 1181 to 1179	4/14/76	RB	

UNLESS OTHERWISE SPECIFIED DIMENSIONS ARE IN INCHES

TOLERANCES

FRACT.	.X	.XX	.XXX	ANGLE
±	±	±	±	±

DWG. SCALE

DRAWN	KW	2-2-76
CHECKED		
APPV'D.		

2314

SF37A

60-4-102.128.187

1000-1000 (8/70)

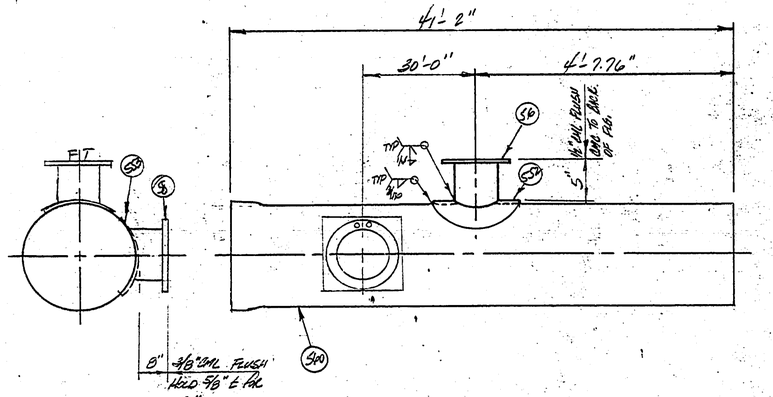

FLAG	ITEM NO.	QUANTITY THIS DWG.	DESCRIPTION	MATERIAL SPECIFICATION
	560	41'-2"	49.875" O.D. x 4GA CYL	
	56	1	18" CL. "D" SKIRTED FLG. SEE SHT. SB1	
	58	1	24" CL. "D" SKIRTED FLG. SEE SHT. SB1	
	552	1	38.25" O.D. x 5/16" R. COLLAR ROLL TO 24.94" R.	
	553	1	48" SQ. x 5/16" R. COLLAR ROLL TO 24.94" R.	

CLASS 440
CMC 75
CML 75

Ameron PIPE PRODUCTS GROUP

Russian River - Contract #1

CHANGE ORDERS	SYMBOL	REVISION	DATE	BY	APPV'D.

UNLESS OTHERWISE SPECIFIED DIMENSIONS ARE IN INCHES

TOLERANCES

FRACT.	X	XX	XXX	ANGLE
±	±	±	±	±

DWG. SCALE

DRAWN	KW	2-2-76
CHECKED		
APPV'D.		

2314

SF38.0

60-4-102.128.188

1000-1000 (8/70)

5F38A

FLAG	ITEM NO.	QUANTITY THIS DWG.	DESCRIPTION	MATERIAL SPECIFICATION
	561	1	48" CL'D" SKIRTED FLG. SEE SHT. 5B1	
	518	1	2" x 3000# THREDOLET	

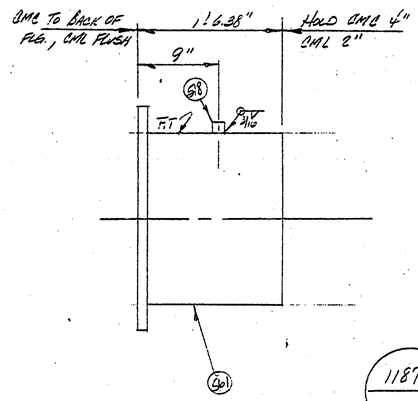

1187
5L13

CMC = .75
CML = .50

Specials

CHANGE ORDERS	SYMBOL	REVISION	DATE	BY	APPV'D.

UNLESS OTHERWISE SPECIFIED DIMENSIONS ARE IN INCHES

TOLERANCES

FRACT.	.X	.XX	.XXX	ANGLE
±	±	±	±	±

DWG. SCALE

Ameron PIPE PRODUCTS GROUP

Russian River – Contract #1

DRAWN	KW	2-5-76
CHECKED		
APPV'D.		

2314 5F38A.0

60-4-102.128.189

1000-1000 (8/70)

FLAG	ITEM NO.	QUANTITY THIS DWG.	DESCRIPTION	MATERIAL SPECIFICATION
	560	4'-7.54	49.875" O.D. x 4GA. CYL.	
	59	1	48" CL. "D" SKIRTED FLG. SEE SHT. 531	
	518	1	2" x 3000# THREDOLET	
	537	1	5/16" R x 4" WIDE BUTTSTRAP BELL ROLL TO 49.875" I.D.	

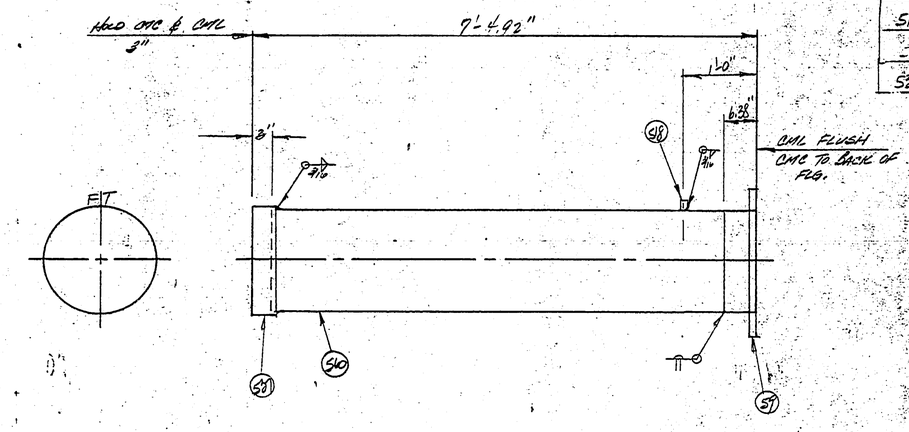

CLASS 440
CMC .75
CML .75
CS #31

Ameron PIPE PRODUCTS GROUP

Russian River - Contract #1

CHANGE ORDERS	SYMBOL	REVISION	DATE	BY	APPV'D

UNLESS OTHERWISE SPECIFIED DIMENSIONS ARE IN INCHES

TOLERANCES

FRACT.	.X	.XX	.XXX	ANGLE
±	±	±	±	±

DWG. SCALE

DRAWN LW 2-2-76
CHECKED
APPV'D

2314

SF39.0

60-4-102.128.190

1000-1000 (8 70)

SF40

SS6	40'-10.25"	49.875" O.D. x 46A. CYL.	

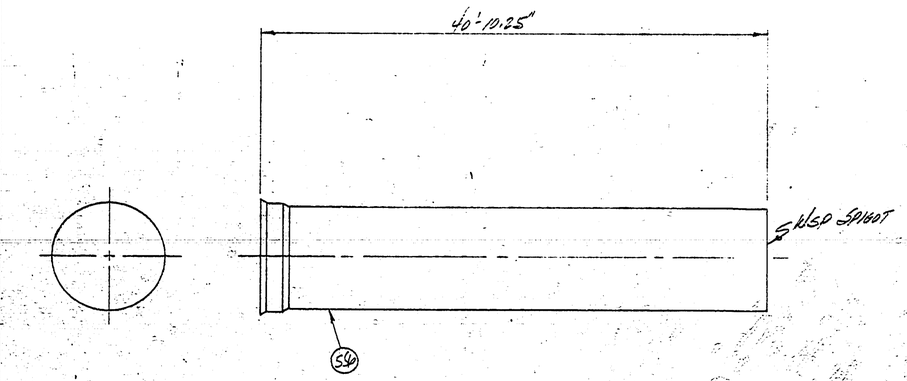

CLASS 440
CMC .75
CML .75
1195
SU4

Ameron PIPE PRODUCTS GROUP

Russian River - Contract #2

CHANGE ORDERS	SYMBOL	REVISION	DATE	BY	APPV'D
	△	Change Pc No From 1194 to 1195	4/19/76	FB	

UNLESS OTHERWISE SPECIFIED DIMENSIONS ARE IN INCHES
TOLERANCES
FRACT. ± .XX ± .XXX ± ANGLE
DWG. SCALE

DRAWN LW 2-3-76
CHECKED
APPV'D

2314
60-4-102.128.191

SF40.1

1000-1000 (8/70)

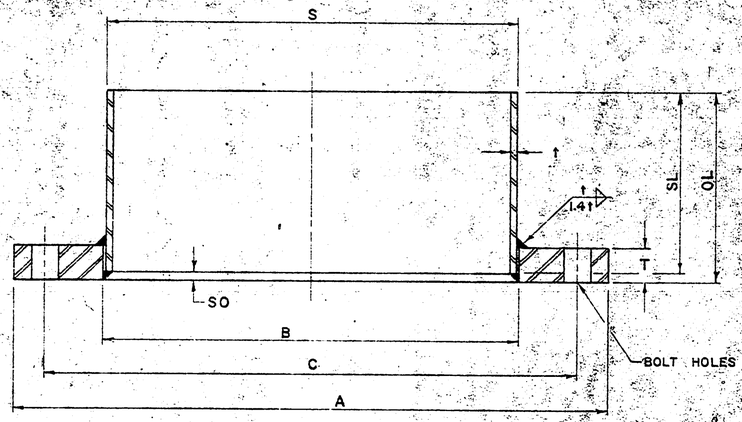

NOMINAL PIPE SIZE	MAT'L LIST NO	QUANTITY	OVERALL LENGTH OL	SKIRT LENGTH SL	SKIRT THICKNESS t	SKIRT OFFSET SO	SKIRT O.D. S	I.D. FLANGE B	O.D. FLANGE A	NUMBER BOLT HOLES	BOLT CIRCLE C	DIAM. BOLT HOLES	FLANGE THICKNESS T
24	58		12.25	12.00	1/4	1/4	25.75	25.81	32	20	29 1/2	1 3/8	1 1/4
30									38 3/4	28	36	1 3/8	1 3/8
36									46	32	42 3/4	1 5/8	1 5/8
42									53	36	49 1/2	1 5/8	1 3/4
48	59		6.38	6.00	.31"	.38	49.875	49.94"	59 1/2	44	56	1 5/8	1 3/4
48	561		18.38	18.00	.31	.38	49.875	49.94	59 1/2	44	56	1 5/8	1 3/4
60									73	52	69 1/4	1 7/8	2 1/4
18	510		9.50	9.00	1/2	1/2	18.00	18.06	28	24	24 3/4	1 3/8	2 3/8
18	57		9.50	9.00	1/2	1/2	18.00	18.06	28	24	24 3/4	1 3/8	1 3/8
18	56		9.50	9.00	1/2	1/2	18.00	18.06	25	16	22 3/4	1 1/4	1 1/16

SPECIFICATIONS

STEEL:
FLANGE – ASTM A-283, Gr. B, C or D
SKIRT – ASTM A-283, Gr. C or D
ASTM A-570, Gr. C

FACING:
FINAL MACHINING OF THE FLANGES SHALL [illegible] ONLY AFTER ALL WELDING TO THE PIPE [illegible] COMPLETED. FLANGES SHALL BE FACED [illegible] TO THE LONGITUDINAL AXIS OF THE PIPE [illegible] THE FLANGES SHALL BE FACED SMOOTH [illegible] HAVE A SERRATED FINISH OF APPROXIMATE[illegible] 32 SERRATIONS PER INCH, APPROXIMATELY [illegible] DEEP. SERRATIONS MAY BE SPIRAL OR [illegible] CONCENTRIC. EDGES OF FACED SURFACES [illegible] BOLT HOLES SHALL BE DEBURRED.

TOLERANCES:
INSIDE DIAMETER + 1/16" – 0"
OUTSIDE DIAMETER ± 1/8"
THICKNESS OF FLANGES + 1/8" – 0"
BOLT CIRCLE ± 1/16"
OUTSIDE DIAMETER SKIRT ± 0.080" MEAS[illegible] AT ANY POINT.
BOLT HOLES SHALL BE EQUALLY SPACED [illegible]
DIAMETERS A, B AND C TO BE CONCE[illegible] ABOUT CENTERLINE ± 1/16"
SKIRT CLOSING SEAMS SHALL BE FULL [illegible] PENETRATION BUTTWELD WITH 1/16" MAX [illegible]

Ameron PIPE PRODUCTS GROUP
Russian River – Contract [illegible]
AWWA CLASS [illegible]

60-4-102.128.192

"D" BLIND

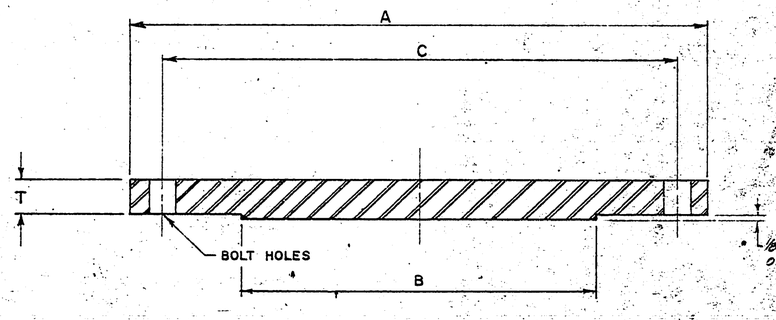

NOMINAL PIPE SIZE	MAT'L LIST NO	QUANTITY	RAISED FACE B	O.D. FLANGE A	NUMBER BOLT HOLES	BOLT CIRCLE C	DIAM. BOLT HOLES	FLANGE THICKNESS T
12			11	19	12	17	1	13/16
14			13	21	12	18 3/4	1 1/8	15/16
16			15	23 1/2	16	21 1/4	1 1/8	1
18	(511)		16	25	16	22 3/4	1 1/4	1 1/16
20			19	27 1/2	20	25	1 1/4	1 1/8
24			23	32	20	29 1/2	1 3/8	1 1/4
30			29	38 3/4	28	36	1 3/8	1 3/8
36			35	46	32	42 3/4	1 5/8	1 5/8
42			41	53	36	49 1/2	1 5/8	1 3/4
48			47	59 1/2	44	56	1 5/8	1 3/4
18	(517)		16	28	24	24 3/4	1 3/4	1 3/8

SPECIFICATIONS

STEEL:
ASTM A-283, Gr. B, C or D

FACING:
THE FLANGES SHALL BE FACED SMOOTH OR MAY HAVE A SERRATED FINISH OF APPROXIMATELY 32 SERRATIONS PER INCH, APPROXIMATELY 1/64" DEEP. SERRATIONS MAY BE SPIRAL OR CONCENTRIC. EDGES OF FACED SURFACES AND BOLT HOLES SHALL BE DEBURRED.

TOLERANCES:
RAISED FACE DIAMETER +0" − 1/8"
OUTSIDE DIAMETER ± 1/8"
THICKNESS OF FLANGES +1/8" −0"
BOLT CIRCLE ± 1/16"
BOLT HOLES SHALL BE EQUALLY SPACED ± 1/64"
DIAMETERS A, B, AND C TO BE CONCENTRIC ABOUT CENTERLINE ± 1/16"

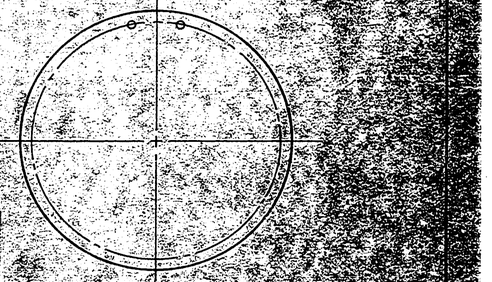

SYMBOL	REVISION	DATE	BY	APPV'D.

Ameron PIPE PRODUCTS GROUP

Russian River - Contract #1

DRAWN LW 7-1-70 AWWA CLASS "D" BLIND FLG.
CHECKED 7-8-70
APPV'D. 7-8-70

60-4-102.128.193

1000-1004 (8/70)

"D" BLIND

583

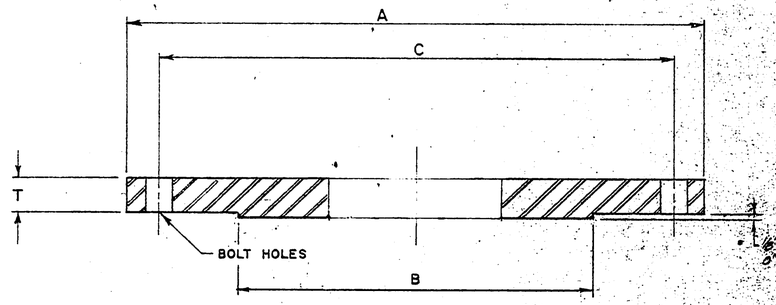

NOMINAL PIPE SIZE	MAT'L LIST NO	QUANTITY	RAISED FACE B	O.D. FLANGE A	NUMBER BOLT HOLES	BOLT CIRCLE C	DIAM. BOLT HOLES	FLANGE THICKNESS T
12			11	19	12	17	1	13/16
14			13	21	12	18 3/4	1 1/8	15/16
16			15	23 1/2	16	21 1/4	1 1/8	1
18	(94)		16	25	16	22 3/4	1 1/4	1 1/16
20			19	27 1/2	20	25	1 1/4	1 1/8
24			23	32	20	29 1/2	1 3/8	1 1/4
30			29	38 3/4	28	36	1 3/8	1 3/8
36			35	46	32	42 3/4	1 5/8	1 5/8
42			41	53	36	49 1/2	1 5/8	1 3/4
48			47	59 1/2	44	56	1 5/8	1 3/4

SPECIFICATIONS

STEEL:
ASTM A-283, Gr. B,C or D.

FACING:
THE FLANGES SHALL BE FACED SMOOTH OR MAY HAVE A SERRATED FINISH OF APPROXIMATELY 32 SERRATIONS PER INCH, APPROXIMATELY 1/64" DEEP. SERRATIONS MAY BE SPIRAL OR CONCENTRIC. EDGES OF FACED SURFACES AND BOLT HOLES SHALL BE DEBURRED.

TOLERANCES:
RAISED FACE DIAMETER + 0" - 1/8"
OUTSIDE DIAMETER ± 1/8"
THICKNESS OF FLANGES + 1/8" -0"
BOLT CIRCLE ± 1/16"
BOLT HOLES SHALL BE EQUALLY SPACED ± 1/64"
DIAMETERS A, B AND C TO BE CONCENTRIC ABOUT CENTERLINE ± 1/16"

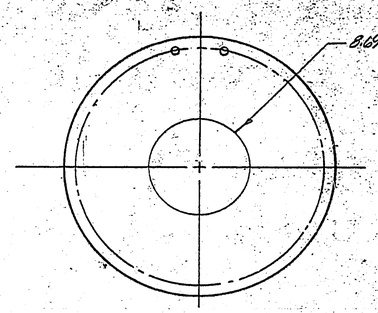

Ameron PIPE PRODUCTS GROUP

Russian River - Contract #1

SYMBOL	REVISION	DATE	BY	APP'D.
		-		

DRAWN	KW	2-4-76
CHECKED		
APP'D.		

AWWA CLASS "D" BLIND FLG.

2314 583.0

60-4-102.128.194

"D" BLIND

584

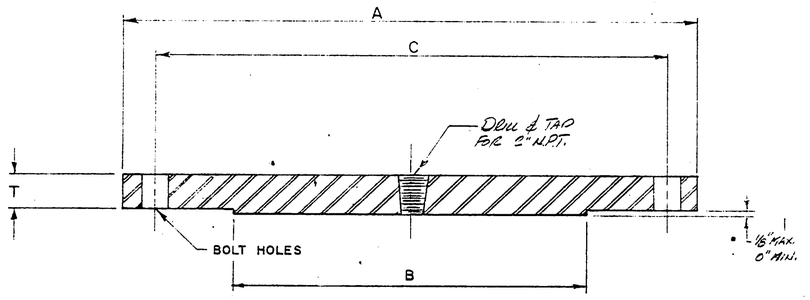

NOMINAL PIPE SIZE	MAT'L LIST NO	QUANTITY	RAISED FACE B	O.D. FLANGE A	NUMBER BOLT HOLES	BOLT CIRCLE C	DIAM. BOLT HOLES	FLANGE THICKNESS T
12			11	19	12	17	1	13/16
14			13	21	12	18 3/4	1 1/8	15/16
16			15	23 1/2	16	21 1/4	1 1/8	1
18	(53)		16	25	16	22 3/4	1 1/4	1 1/16
20			19	27 1/2	20	25	1 1/4	1 1/8
24			23	32	20	29 1/2	1 3/8	1 1/4
30			29	38 3/4	28	36	1 3/8	1 3/8
36			35	46	32	42 3/4	1 5/8	1 5/8
42			41	53	36	49 1/2	1 5/8	1 3/4
48			47	59 1/2	44	56	1 5/8	1 3/4

SPECIFICATIONS

STEEL:
ASTM A-283, Gr. B, C or D

FACING:
THE FLANGES SHALL BE FACED SMOOTH OR MAY HAVE A SERRATED FINISH OF APPROXIMATELY 32 SERRATIONS PER INCH, APPROXIMATELY 1/64" DEEP. SERRATIONS MAY BE SPIRAL OR CONCENTRIC. EDGES OF FACED SURFACES AND BOLT HOLES SHALL BE DEBURRED.

TOLERANCES:

RAISED FACE DIAMETER + 0" − 1/8"

OUTSIDE DIAMETER ± 1/8"

THICKNESS OF FLANGES + 1/8" − 0"

BOLT CIRCLE ± 1/16"

BOLT HOLES SHALL BE EQUALLY SPACED ± 1/64"

DIAMETERS A, B AND C TO BE CONCENTRIC ABOUT CENTERLINE ± 1/16"

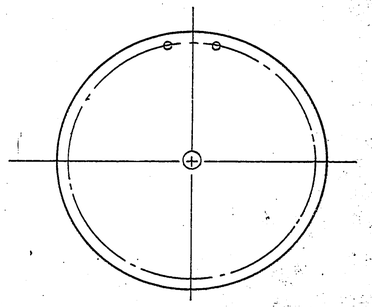

Ameron PIPE PRODUCTS GROUP

Russian River - Contract #1

SYMBOL	REVISION	DATE	BY	APP'D

DRAWN tw 2-4-76

CHECKED

APP'D.

AWWA CLASS "D" BLIND FLG.

2314 584.0

60-4-102.128.195

"D" BLIND

585

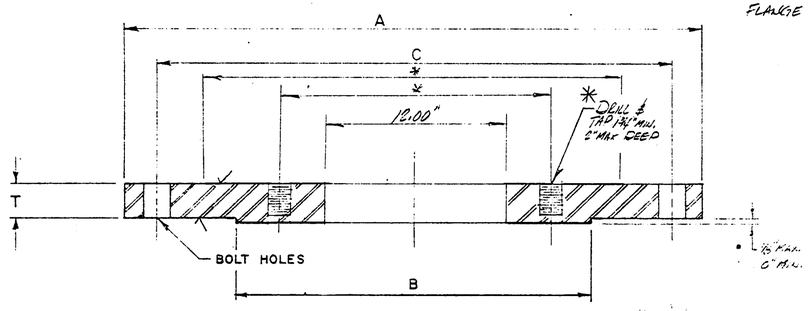

* CONTR. TO SUPPLY VALVE FLANGE DIMENSIONS

NOMINAL PIPE SIZE	MAT'L LIST NO	QUANTITY	RAISED FACE B	O.D. FLANGE A	NUMBER BOLT HOLES	BOLT CIRCLE C	DIAM. BOLT HOLES	FLANGE THICKNESS T
12			11	19	12	17	1	13/16
14			13	21	12	18 3/4	1 1/8	15/16
16			15	23 1/2	16	21 1/4	1 1/8	1
18	515		16	23	24	24 3/4	1 3/8	2 3/8
20			19	27 1/2	20	25	1 1/4	1 1/8
24			23	32	20	29 1/2	1 3/8	1 1/4
30			29	38 3/4	28	36	1 3/8	1 3/8
36			35	46	32	42 3/4	1 5/8	1 5/8
42			41	53	36	49 1/2	1 5/8	1 3/4
48			47	59 1/2	44	56	1 5/8	1 3/4

SPECIFICATIONS

STEEL:
ASTM A-283, Gr. B,C or D

FACING:
THE FLANGES SHALL BE FACED SMOOTH OR MAY HAVE A SERRATED FINISH OF APPROXIMATELY 32 SERRATIONS PER INCH, APPROXIMATELY 1/64" DEEP. SERRATIONS MAY BE SPIRAL OR CONCENTRIC. EDGES OF FACED SURFACES AND BOLT HOLES SHALL BE DEBURRED.

TOLERANCES:

RAISED FACE DIAMETER +0" − 1/8"

OUTSIDE DIAMETER ± 1/8"

THICKNESS OF FLANGES + 1/8" −0"

BOLT CIRCLE ± 1/16"

BOLT HOLES SHALL BE EQUALLY SPACED ± 1/64"

DIAMETERS A, B AND C TO BE CONCENTRIC ABOUT CENTERLINE ± 1/16"

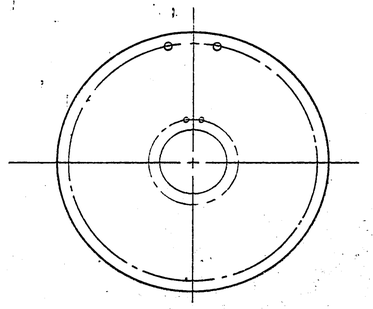

Ameron PIPE PRODUCTS GROUP

Russian River - Contract #1

SYMBOL	REVISION	DATE	BY	APPV'D

DRAWN KW 6-4-76 AWWA CLASS D BLIND FLG.

CHECKED

APPV'D.

2314 SBS.0

60-4-102.128.196

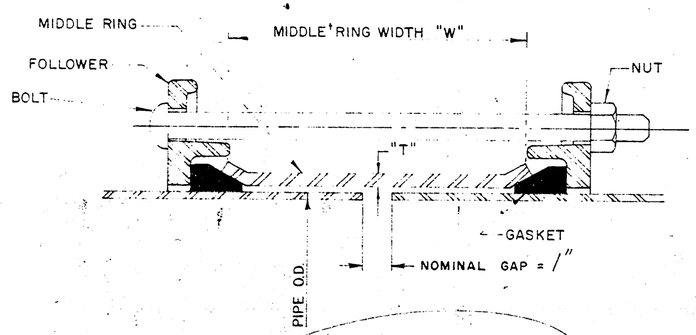

FLEXIBLE COUPLINGS

PIECE NO.	SHEET NO.	MAT'L. LIST NO.	QUANTITY	PIPE O.D.	MIDDLE RING "W"	MIDDLE RING "T"
		516		8.66"	5	1/4
		517		12.78	5	1/4

SPECIFICATIONS

1. COUPLINGS SHALL BE SMITH-BLAIR NO. 411, BAKER SERIES 200, DRESSER STYLE 38 OR EQUAL.
2. MATERIALS:
   - MIDDLE RING MANUFACTURES STD
   - FOLLOWERS " "
   - GASKET " "
   - BOLTS " "
   - NUTS " "
3. PAINT OR COATING:
   - MIDDLE RING OUTSIDE 8 MILS, INSIDE 16 MILS } COAL TAR EPOXY, BITUMASTIC 300-M OR AMERCOAT #78
   - FOLLOWERS 8 MILS } "
   - BOLTS CADMIUM PLATED ASTM A165
   - NUTS " "

Ameron PIPE PRODUCTS GROUP

RUSSIAN RIVER - CONTRACT #1

					DRAWN	KW 2-4-76
					CHECKED	
SYMBOL	REVISION	DATE	BY	APPV'D	APPV'D	

2314 SB6.07

60-4-102.128.197

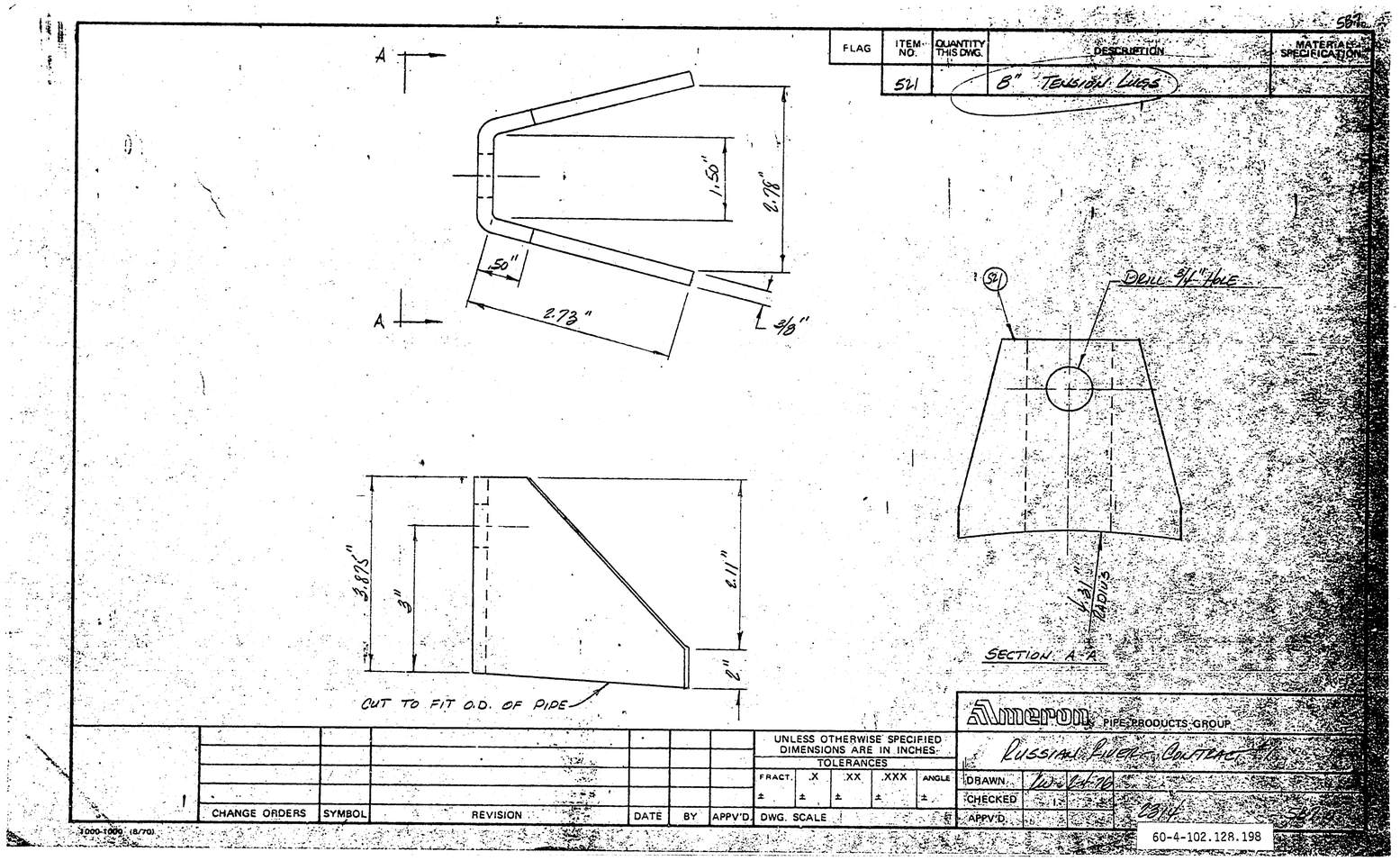

FLAG
ITEM NO.
QUANTITY THIS DWG.
DESCRIPTION
MATERIAL SPECIFICATION
521
8" TENSION LUGS
A
A
1.50"
2.78"
.50"
2.73"
3/8"
521
DRILL 3/4" HOLE
4.31" RADIUS
SECTION A-A
3.875"
3"
2.11"
2"
CUT TO FIT O.D. OF PIPE
UNLESS OTHERWISE SPECIFIED DIMENSIONS ARE IN INCHES
TOLERANCES
FRACT. .X .XX .XXX ANGLE
DWG. SCALE
CHANGE ORDERS
SYMBOL
REVISION
DATE
BY
APPV'D.
Ameron PIPE PRODUCTS GROUP
RUSSIAN RIVER CONTRACT #1
DRAWN
CHECKED
APPV'D.
2314
60-4-102.128.198
1000-1000 (8/70)

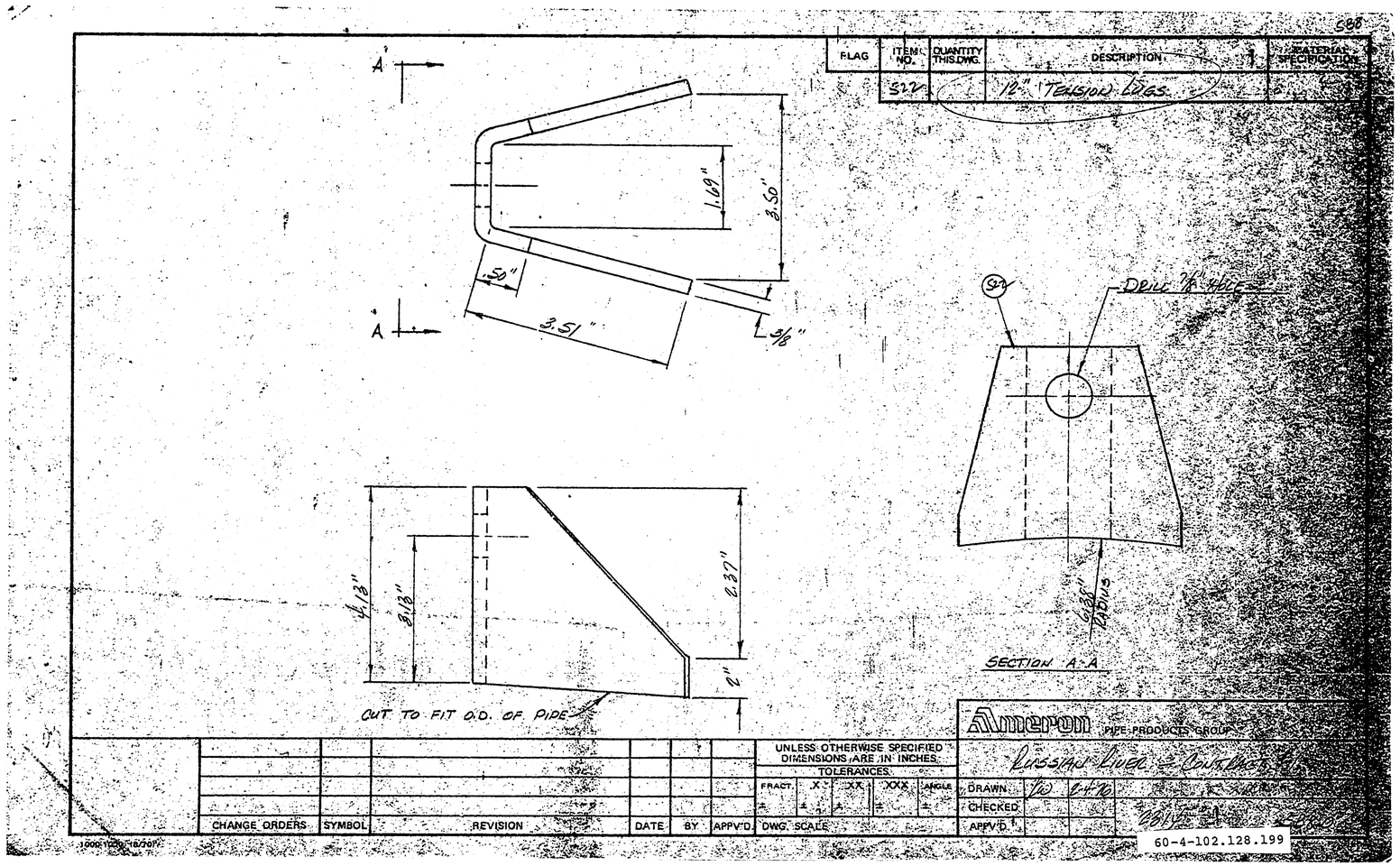

FLAG
ITEM NO.
QUANTITY THIS DWG.
DESCRIPTION
MATERIAL SPECIFICATION
522
12" TENSION LUGS
A
A
1.69"
3.50"
.50"
3.51"
3/8"
DRILL 7/8" HOLE
6.38" RADIUS
SECTION A-A
4.13"
3.13"
2.37"
2"
CUT TO FIT O.D. OF PIPE
UNLESS OTHERWISE SPECIFIED DIMENSIONS ARE IN INCHES
TOLERANCES
FRACT. X XX XXX ANGLE
DWG. SCALE
CHANGE ORDERS
SYMBOL
REVISION
DATE
BY
APPV'D
Ameron PIPE PRODUCTS GROUP
RUSSIAN RIVER - CONTRACT
DRAWN
CHECKED
APPV'D
60-4-102.128.199

589

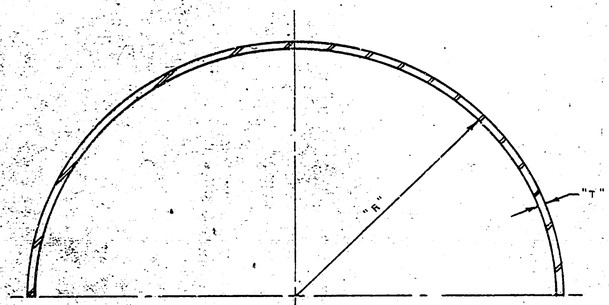

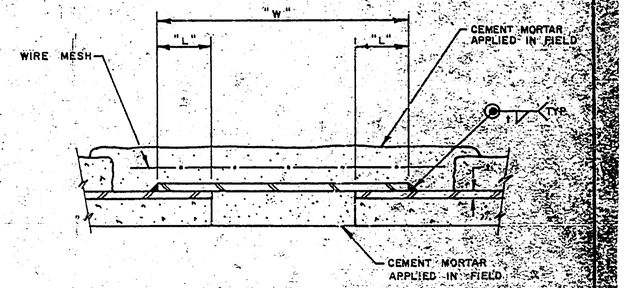

PIPE SIZE	MAT'L LIST NO.	QUANTITY HALF B.S.	"T"	"W"	"R"	CUT LENGTH	"L"
48	530	4	9/16	10	24.94	78.84	2

Ameron PIPE PRODUCTS GROUP

Russian River - Contract #1

SYMBOL	REVISION	DATE	BY	APP'V'D.

DRAWN	KW	2-4-76	
CHECKED			
APP'V'D.			

23 of 589.0

60-4-102.128.200

1000 1004 (8/70)