RUSSIAN RIVER-COTATI CONTRACT 1

60-4-102.101	LOCATION MAP & INDEX TO DRAWINGS
60-4-102.102	HYDRAULIC GRADE LINE
60-4-102.103	STA. 0+00.15 TO STA. 20+18.98
60-4-102.104	STA. 20+18.98 TO STA. 43+30
60-4-102.105	STA. 43+30 TO STA. 73+80
60-4-102.106	STA. 73+80 TO STA. 104+45
60-4-102.107	STA. 104+45 TO STA. 134+00
60-4-102.108	STA. 134+00 TO STA. 163+40
60-4-102.109	STA. 163+40 TO STA. 194+10
60-4-102.110	STA. 194+10 TO STA. 223+75
60-4-102.111	STA. 223+75 TO STA. 253+85
60-4-102.112	STA.253+85 TO STA. 284+00
60-4-102.113	STA. 284+00 TO STA. 302+70
60-4-102.114	CONNECTION TO CAISSONS 3 & 4 ELBOWS, REDUCERS, LATERALS
60-4-102.115	RUSSIAN RIVER CROSSING
60-4-102.116	MARK WEST CREEK CROSSING
60-4-102.117	RIVER ROAD CROSSING
60-4-102.118	SITE IMPROVEMENT PLAN FOR CHLORINATION BUILDING
60-4-102.119	PIPING SCHEMATIC AT CHLORIN BLDG.
60-4-102.120	VENTURI TUBE & CHLORINE DIFFUSER
60-4-102.121	SLOW CLOSING AIR VALVE INSTALLATION
60-4-102.123	WELD LENGTH FOR THRUST ON PIPE BENDS
60-4-102.124	PIPELINE LOG OF BORINGS
60-4-102.125	STRIP SITE FOR PIPELINE BEDDING MATERIAL
60-4-102.126	MISCELLANEOUS DETAILS
WA - 1	GALVANIC ANODES & ELECTROLYSIS TEST STATIONS
WA - 2	DISTRIBUTION TURNOUTS TYPE A & TYPE B
WA - 3	MAIN LINE VALVE TYPE A & B
WA - 4	BLOWOFF TYPE A & B
WA - 5	AIR VALVE INSTALLATION TYPE A, B & C
WA - 6	PRESSURE RELIEF VALVE INSTALLATION
WA - 7	PIPE BEDDING, BACKFILL & TRENCH SURFACING
WA - 8	HIGH PRESSURE PIPELINE WARNING SIGN

RUSSIAN RIVER-COTATI CONTRACT 2

60-4-102.201	LOCATION MAP & INDEX TO DRAWINGS
60-4-102.202	HYDRAULIC GRADE LINE
60-4-102.203	STA. 302+70 TO STA. 314+10
60-4-102.204	STA. 314+10 TO STA. 344+30
60-4-102.205	STA. 344+30 TO STA. 374+30
60-4-102.206	STA. 374+30 TO STA. 404+50
60-4-102.207	STA. 404+50 TO STA. 434+55
60-4-102.208	STA. 434+55 TO STA. 464+70
60-4-102.209	STA. 464+70 TO STA. 494+50
60-4-102.210	STA. 494+50 TO STA. 524+45
60-4-102.211	STA. 524+45 TO STA. 554+50
60-4-102.212	STA. 554+50 TO STA. 584+50
60-4-102.213	STA. 584+50 TO STA. 614+65
60-4-102.214	STA. 614+65 TO STA. 644+70
60-4-102.215	STA. 644+70 TO STA. 674+65
302132	*ROHNERT PARK INTERCEPTOR SEWER*
60-4-102.216	STA. 674+65 TO STA. 704+75
60-4-102.217	STA. 704+75 TO STA. 735+15
60-4-102.218	STA. 735+15 TO STA. 766+00
60-4-102.219	STA. 766+00 TO STA. 783+90
60-4-102.220	STA. 783+90 TO STA. 805+40
60-4-102.221	STA. 805+40 TO STA. 826+55.28
60-4-102.222	RAILROAD & HIGHWAY CROSSINGS
60-4-102.223	LAGUNA DE SANTA ROSA CROSSING #2
60-4-102.224	WASHOE CREEK CROSSING
60-4-102.225	COTATI RESERVOIR CONNECTION
60-4-102.226	WELD LENGTH FOR THRUST ON PIPE BENDS
60-4-102.227	PIPELINE, LOG OF BORINGS
60-4-102.228	STRIP SITE FOR PIPELINE BEDDING MATERIAL
60-4-102.229	MISCELLANEOUS DETAILS
WA - 1	GALVANIC ANODES & ELECTROLYSIS TEST STATIONS
WA - 2	DISTRIBUTION TURNOUTS TYPE A & TYPE B
WA - 3	MAIN LINE VALVE TYPE A & B
WA - 4	BLOWOFF TYPE A & B
WA - 5	AIR VALVE INSTALLATION TYPE A, B & C
WA - 6	PRESSURE RELIEF VALVE INSTALLATION
WA - 7	PIPE BEDDING, BACKFILL & TRENCH SURFACING
WA - 8	HIGH PRESSURE PIPELINE WARNING SIGN

RUSSIAN RIVER-COTATI CONTRACT 3

60-4-102.301	LOCATION MAP & INDEX TO DRAWINGS
60-4-102.302	HYDRAULIC GRADE LINE
60-4-102.303	STA. 0+25 TO STA. 28+32
60-4-102.304	STA. 28+32 TO STA. 55+55
60-4-102.305	STA. 55+55 TO STA. 84+74
60-4-102.306	STA. 84+74 TO STA. 113+82+/-
60-4-102.307	RESERVOIR CONNECTION, LOG OF BORINGS & THRUST WELDS
60-4-102.308	BEDDING-BACKFILL & LAGUNA XING
60-4-102.309	R.R. XING & PET. AQU. CONNECTION
60-4-102.310	MISCELLANEOUS DETAILS
WA - 1	GALVANIC ANODES & ELECTROLYSIS TEST STATIONS
WA - 2	DISTRIBUTION TURNOUTS TYPE A & TYPE B
WA - 3	MAIN LINE VALVE TYPE A & B
WA - 5	AIR VALVE INSTALLATION TYPE A, B & C
WA - 8	HIGH PRESSURE PIPELINE WARNING SIGN

NO.	DATE	REVISION	BY

SONOMA COUNTY WATER AGENCY

SCALE :

DATE : 03/16/09

DRAWN : SP / JW

REVIEWED :

RUSSIAN RIVER-COTATI INTERTIE

REVISED INDEX TO DRAWINGS
RECORD DRAWINGS

FILE NAME: RusslanRiver_Cotati-Aqueduct_HybridDrawingIndex.dwg

CONTRACT NUMBER:

DRAWING NUMBER: G-1_rev

SHEET 1 OF 1

\\SD-DATA\Proj\water transmission\pipelines\rr-cotati Inter\RussianRiver_Cotati-Aqueduct_HybridDrawingIndex.dwg

SONOMA COUNTY WATER AGENCY

RUSSIAN RIVER-COTATI INTERTIE PROJECT

PIPELINE CONTRACT NO. 1

RUSSIAN RIVER TO HALL ROAD

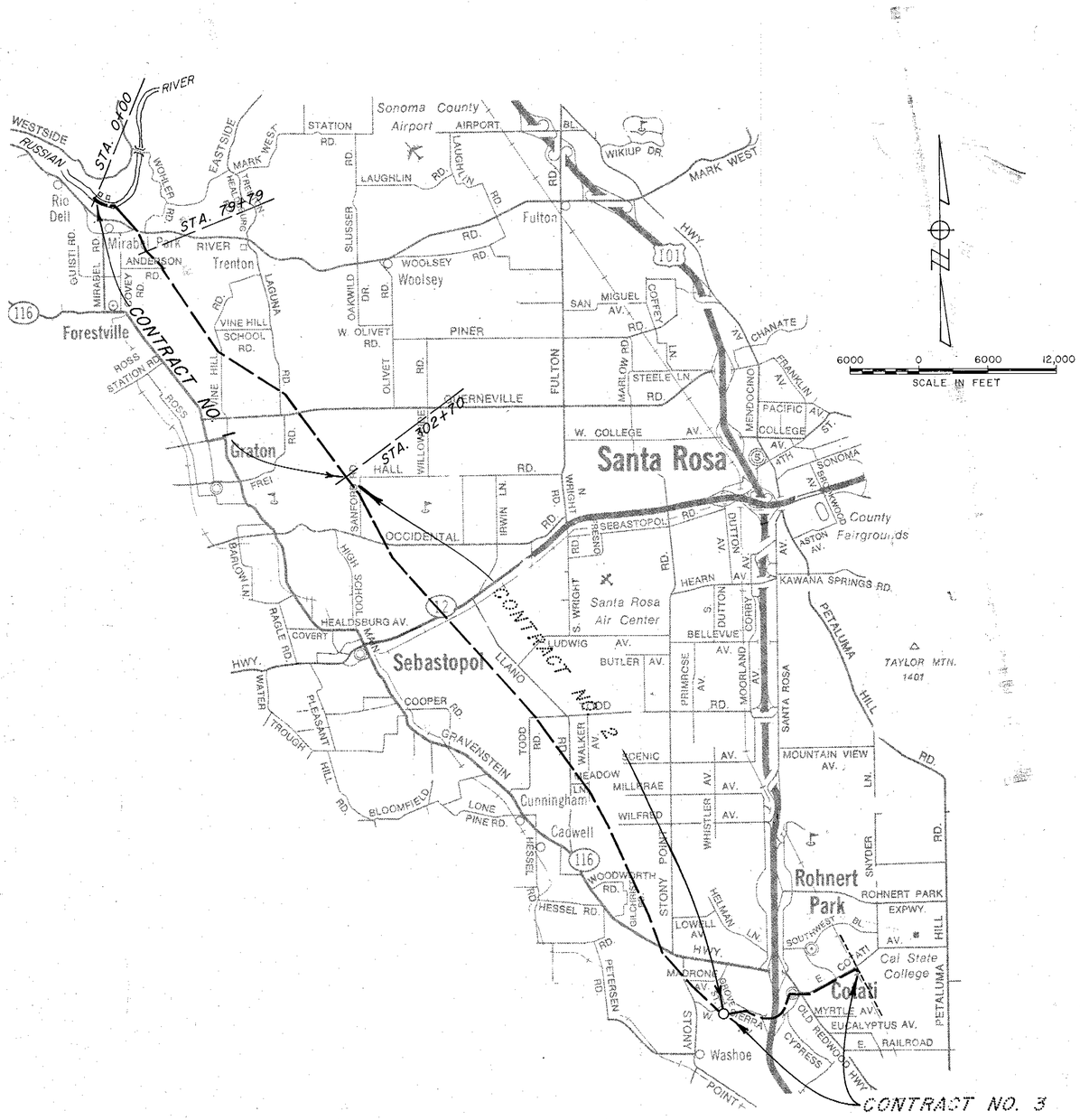

GENERAL NOTES

1. ELEVATIONS SHOWN ARE IN FEET & DECIMALS THEREOF ABOVE N.G.S. M.S.L.
2. STATIONS SHOWN ON PLAN & PROFILE ARE HORIZONTAL DISTANCES UNLESS OTHERWISE NOTED.
3. ALL STATIONS, GRADES & ELEVATION ARE SUBJECT TO REVISION TO SUIT FIELD CONDITIONS.
4. DRAWINGS ARE DESIGNATED BY THEIR LAST THREE DIGITS, e.g., DRAWING NO. 60-4-102.101 IS REFERRED TO AS DRAWING NO. 101, ETC.

LEGEND

FACILITIES TO BE CONSTRUCTED

CENTERLINE OF RIGHT OF WAY
ELECTROLYSIS TEST STATION
GALVANIC ANODE
PRE = PERMANENT REFERENCE ELECTRODE

VEGETATION
- EROSION CONTROL
- PERMANENT PASTURE REESTABLISHMENT

INSULATION FLANGE
HIGH PRESSURE PIPELINE WARNING SIGN
MANHOLE
MAINLINE VALVE
AIR VALVE
PRESSURE RELIEF VALVE
TURNOUT
BLOWOFF
BLIND TEE OR LATERAL
AIR VALVE AROUND MAINLINE VALVE
FIELD GATE ON ℄ OF R/W

CLASS OF BEDDING & BACKFILL DESIGNATION PER DWG. NO. WA-7 SPECIFIC PIPE ELEVATIONS SHOWN ON PIPE PROFILE ARE FOR OUTSIDE TOP OF PIPE.

EXISTING FACILITIES

GAS LINE — G —
SANITARY SEWER — SS —
WATER LINE — 6"W —
TELEVISION CABLE — TV —
ELECTRIC CABLE — E —
TELEPHONE CABLE
FENCE
PROPERTY LINE — P —
POWER AND/OR TELEPHONE CABLE & GUY

OTHER INFORMATION

SOIL SAMPLE LOCATION
SURVEY CONTROL POINT
REFERENCE POINTS FOR LOCATING R/W CENTERLINE

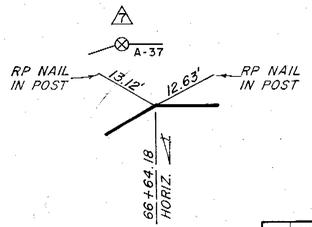

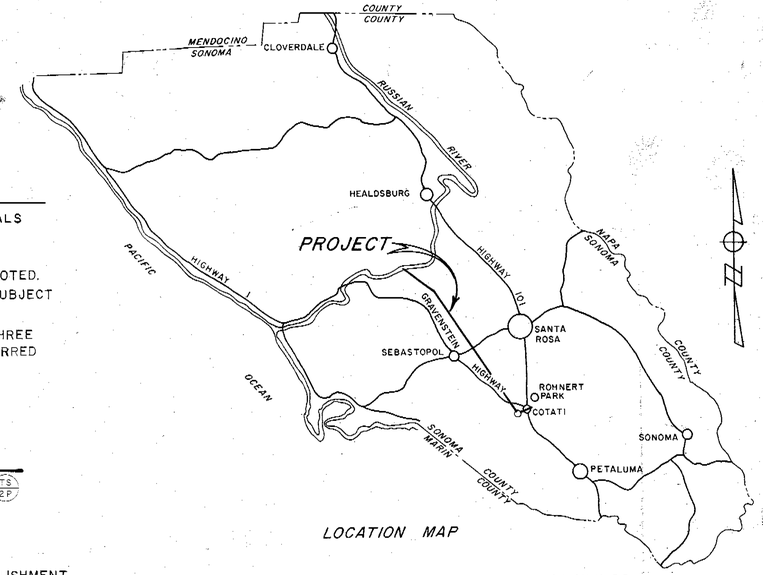

LOCATION MAP

INDEX TO DRAWINGS

SHT. NO.	DRAWING NO.	TITLE
1	60-4-102.101	LOCATION MAP & INDEX TO DRAWINGS
2	102.102	HYDRAULIC GRADE LINE
3	102.103	STA. 0+00 TO STA. 20+18.98
4	102.104	STA. 20+18.98 TO STA. 43+30
5	102.105	STA. 43+30 TO STA. 73+80
6	102.106	STA. 73+80 TO STA. 104+45
7	102.107	STA. 104+45 TO STA. 134+00
8	102.108	STA. 134+00 TO STA. 163+40
9	102.109	STA. 163+40 TO STA. 194+10
10	102.110	STA. 194+10 TO STA. 223+75
11	102.111	STA. 223+75 TO STA. 253+85
12	102.112	STA. 253+85 TO STA. 284+00
13	102.113	STA. 284+00 TO STA. 302+70
14	102.114	CONNECTION TO CAISSONS 3 & 4 ELBOWS, REDUCERS, LATERALS
15	102.115	RUSSIAN RIVER CROSSING
16	102.116	MARK WEST CREEK CROSSING
17	102.117	RIVER ROAD CROSSING
18	102.118	SITE IMPROVEMENT PLAN FOR CHLORIN. BLDG.
19	102.119	PIPING SCHEMATIC AT CHLORIN. BLDG.
20	102.120	VENTURI TUBE & CHLORINE DIFFUSER
21	102.121	SLOW CLOSING AIR VALVE INSTALLATION
DELETED 22	102.122	
23	102.123	WELD LENGTH FOR THRUST ON PIPE BENDS
24	102.124	LOG OF BORINGS
25	102.125	STRIP SITE FOR PIPELINE BEDDING MATERIAL
26	102.126	MISCELLANEOUS DETAILS
27	WA-1	GALVANIC ANODES & ELECTROL. TEST STA.
28	WA-2	DISTRIBUTION TURNOUTS TYPE A & TYPE B
29	WA-3	MAIN LINE VALVE TYPE A & B
30	WA-4	BLOWOFF TYPE A & B
31	WA-5	AIR VALVE INSTALLATION TYPE A, B & C
32	WA-6	PRESSURE RELIEF VALVE INSTALLATION
33	WA-7	PIPE BEDDING, BACKFILL & TRENCH SURFACING
34	WA-8	HIGH PRESSURE PIPELINE WARNING SIGN

UTILITY NOTES

THE AGENCY HAS, TO THE BEST OF ITS ABILITY, DELINEATED ON THE DRAWINGS UTILITY INSTALLATIONS TO BE ENCOUNTERED WITHIN THE LIMITS OF THE WORK. SUCH INFORMATION IS BASED UPON INFORMATION FURNISHED TO THE AGENCY BY THE UTILITY OWNERS AND THE AGENCY DOES NOT EITHER EXPRESSLY OR BY IMPLICATION GUARANTEE THAT UTILITY INSTALLATIONS WILL BE FOUND AT THE LOCATIONS OR DEPTHS INDICATED. THE AGENCY ASSUMES NO RESPONSIBILITY FOR THE ACCURACY OF THE INFORMATION SHOWN OR FOR THE INADVERTENT OMISSION OF ANY SUCH INFORMATION. PROFILES DO NOT SHOW ALL UTILITY SERVICE LATERALS.

Return to Index

No.	DATE	REVISION	By
		AS BUILT Date 1977	

RUSSIAN RIVER - COTATI INTERTIE PROJECT
RUSSIAN RIVER TO HALL ROAD
LOCATION MAP & INDEX TO DRAWINGS

SCALE: AS SHOWN | APPROVED CHIEF ENGINEER | DRAWN SKMc
DATE: JULY 1, 1975 | RE 8271 | CHECKED

SONOMA COUNTY WATER AGENCY

DESIGNED | SUBMITTED | DRAWING NUMBER 60-4-102.101

SHEET NO. 1

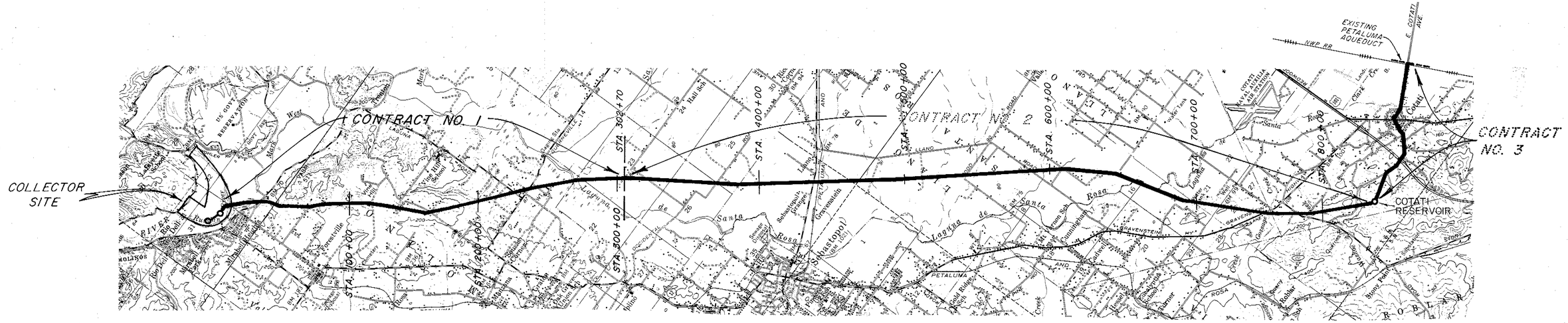

STA. 0+00 — 150' @ ⅜" DEFLECTION (30" Pipe) — 50' @ 5° DEFL. --REPAIRED — 100' @ 2" DEFL. — 50' @ 2" DEFL. — 50' @ 2" DEFL. — 50' @ 3° DEFL. — 50' @ 2½° DEFL. — STA. 302+70± — 50' @ 1½° DEFL. — 350' @ 1½° DEFL. — 50' @ 3° DEFL. — 50' @ 2° DEFL. — 150' @ 1¾° DEFL. — 50' @ 1¾° DEFL. — 150' @ 2° DEFL. — 300' @ 1½° DEFL. — STA. 826+55 / STA. 0+25 — STA. 113+ PETALUMA AQUEDUCT

PIPELINE CONTRACT NO. 1 — CONTRACT NO. 2 — CONTRACT NO. 3

PIPE SIZE: 30" | 42" | 48" | 48"

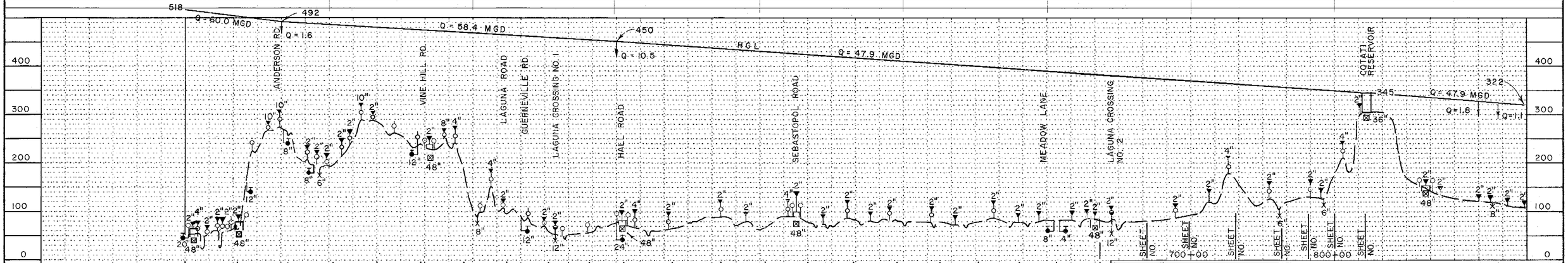

SHEET NO. 4 | SHEET NO. 5 | SHEET NO. 6 | SHEET NO. 7 | SHEET NO. 8 | SHEET NO. 9 | SHEET NO. 10 | SHEET NO. 11 | SHEET NO. 12 | SHEET NO. 13 | SHEET NO. | SHEET NO. | SHEET NO. | SHEET NO. | SHEET NO. | SHEET NO. | SHEET NO. | SHEET NO. | SHEET NO. | SHEET NO. | SHEET NO. | SHEET NO. | SHEET NO.

Return to Index

No.	DATE	REVISION	By
		AS BUILT	

RUSSIAN RIVER – COTATI INTERTIE PROJECT
RUSSIAN RIVER TO HALL ROAD
HYDRAULIC GRADE LINE

SCALE: NONE | APPROVED CHIEF ENGINEER | DRAWN SKMc
DATE: JULY 1, 1975 | RE 8271 | CHECKED

SONOMA COUNTY WATER AGENCY

DESIGNED | SUBMITTED | DRAWING NUMBER
60-4-102.102

ACCESS ROAD FROM WEST SIDE ROAD

APPROX. LIMIT OF STRIP SITE NO. 1 SEE DWG. 125

CAISSON NO. 3 BY OTHERS SEE DWG. 114

PRE GA A

SM-1

C-1

STA. -0+00.15 BEGIN 30" PIPE

S 10° 31' 22.9" E 82.56'

STA. 0+82.41

BEGIN CONTRACT

Cl2 LINE

HORIZ. DEF. LT. 45°

S 55° 31' 23.8" E 436.21'

POWER LINE BY OTHERS

STA. 5+38.62 HORIZ. DEF. LT. 14° 46' 41.2"

CAISSON NO. 4 BY OTHERS SEE DWG. 114

EXISTING 100 H.P. PUMP

CAUTION! APPROXIMATELY 3' COVER OVER EXISTING 16" W

NOTE: PVC CHLORINATION LINE NOT SHOWN SEE DWG. 119

INSTALL 30" PIPE

S 70° 18' 05" E 430.17'

5+00

10+00

SM-2

B-5

N 25° 18' 05" W 167.53

2-12" WLOS

4-10" WLOS

4-10" 3-10" WLOS

2-16" WLOS

STA. 9+19.09 INSTALL 45° 30" LATERAL & MANIFOLD PIPING

STA. 9+68.79 HORIZ. DEF. LT. 13° 30' 36"

Pond

303,000

744,000

R. RUSSIAN RIVER

EXISTING 20" W WOHLER INTERTIE

STA. 19+97.18 BEGIN 48" PIPE & INSTALL 45° 42" LATERAL

STA. 20+18.98 MATCH LINE

FOR DETAILS SEE DWG. NO. 114

APPLE ORCHARD

STA. 19+94.18 EC

INSTALL 20" TEE SEE DWG. 114

STA. 19+86.47 BC

STA. 13+86.23 HORIZ. DEF. LT. 23° 50' 19.4"

WOHLER INTERTIE - 16" W

EXISTING 150 H.P. PUMP

INSTALL 20" BYPASS PIPE CONNECTION - 170'

INSTALL 20" TURNOUT TYPE A

N 49° 40' 06" E 86.61'

N 72° 20' 59.6" E 461.74'

HORIZ.

SM-3

SM-4

SM-27

SM-28

SM-6

SM-5

SM-29

SM-25

SM-24

STA. 15+00

3-10" WLOS

2-10" WLOS

4-10" WLOS

STA. 18+47.96 HORIZ. DEF. LT. 24° 11' 55.9"

INSTALL WARNING SIGN

S 37° 11' 59.4" E

Cl2 LINE

STA. 18+47.96 BC DEF. LT. 24° 11' 55.9"

VINEYARD

Dense

MILLS, D.B. & E.M. A.P. 83-01-02

NOTE: OMIT TYPE B ANODES FROM STA. 0+00.15 TO STA. 20+90

100 0 100 200 scale feet

N

SECTION A-A
STA. 0+87.08 TO 19+86.47 BC

20'

EL. 65

DIKE BY OTHERS

APPROX. EXISTING GROUND EL. 55±

CONTRACTOR MAY USE EXCAVATED MATERIAL WITHIN THESE LIMITS FOR PIPELINE BEDDING MAT'L

2' EL. 48

DIKE BY OTHERS EL. 40.4 TO 41

EL. 42

EL. 42

27'± MAX. COVER OVER PIPE

17'±

4' TYP. Cl2 LINE

13'± COVER OVER PIPE

PIPELINE

LIMIT OF EXCAVATION AFTER COMPLETION OF PIPELINE CONTRACT

NO DIKE BETWEEN STA. 0+87.08 & 4+28

℄ RIVER

HEAD in ft.	500	480 500	480
SPECIAL	WELDED JOINTS		WELDED JOINTS
PIPE SIZE & TYPE	30"	42"	48"
BEDDING/BACKFILL	d/D		

70 60 50 40 30

BEGIN CONTRACT

STA. 0+82.41 HORIZ. DEF. LT. 45°

STA. 5+38.62 HORIZ. DEF. LT. 14° 46' 41.2"

FUTURE GROUND

EXISTING GROUND ELEV.

27' COVER

4" PVC. Cl2 LINE SCH 80.

STA. 13+86.23 HORIZ. DEF. LT. 23° 50' 19.4"

STA. 18+00 INSTALL 20" TURN-OUT TYPE A LT. & PIPING

PVC DRESSER COPLG. (Cl2)

STA. 18+47.96 HORIZ. DEF. LT. 24° 11' 55.9" INSTALL WARNING SIGN

STA. 19+86.47 BC

STA. 19+94.18 EC

STA. 19+97.18 BEGIN 48" PIPE & INSTALL 45° 42" LATERAL

STA. 20+18.98 MATCH LINE

FOR DETAILS SEE DWG. NO. 114

FUTURE DIKE BY OTHERS

EL. 51.0

STA. 20+85.4 18" W.H.

CONCRETE ENCASEMENT

℄ FLANGE ELEV. 36.0

30" PIPELINE

42" PIPELINE

CB

20+00

CAISSON NO. 3 STA. 0+00.15 EXISTING 30" FLANGE

GRADE TO PREVENT AIR POCKETS

STA. 9+19.09 INSTALL 45° 30" LATERAL & MANIFOLD PIPING

STA. 9+68.79 HORIZ. DEF. LT. 13° 30' 36"

STA 18+12.22 AGENCY FORCES INSTALLED MAIN LINE VALVE 42" PRATT TRITON HP-250 SN868371-1-7 YR 1986 250 851G MAX 150° F MAX.

0+00 5+00 10+00 15+00

Return to Index

No	DATE	REVISION	By
1	JAN 87	STA 18+12.22 INSTALLED MAIN Line Valve	

AS BUILT

Date 1-30-87

By Donald Gile

RUSSIAN RIVER-COTATI INTERTIE PROJECT

STA. 0+00.15 TO STA. 20+18.98

SCALE: 1" = 100' | APPROVED CHIEF ENGINEER | DRAWN SKMc

DATE: JULY 1, 1975 | RE 8271 | CHECKED

SONOMA COUNTY WATER AGENCY

DESIGNED | SUBMITTED | DRAWING NUMBER

60-4-102.103

SHEET NO. 3

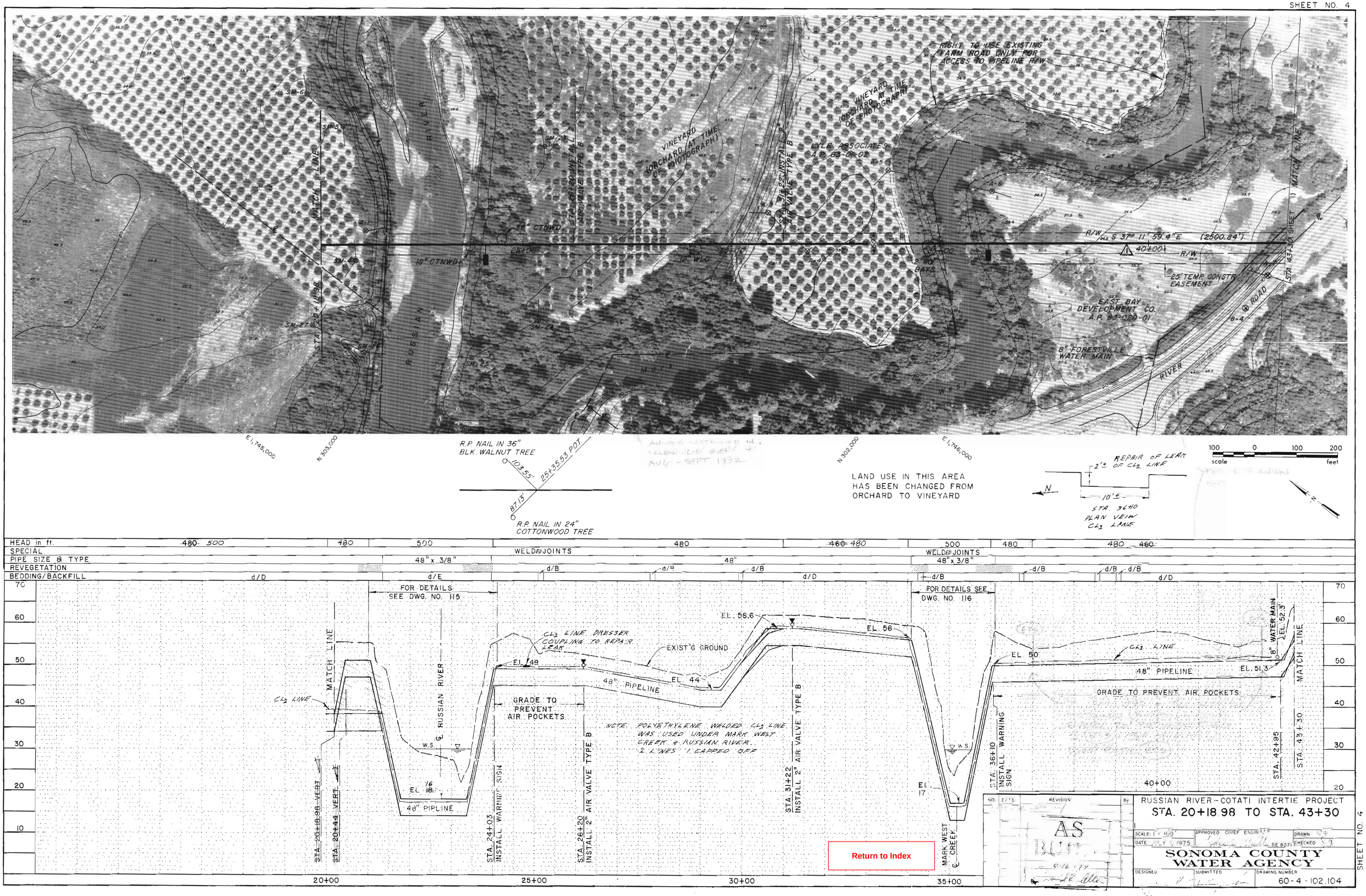
RIGHT TO USE EXISTING FARM ROAD ONLY FOR ACCESS TO PIPELINE R/W
VINEYARD (ORCHARD AT TIME OF PHOTOGRAPH)
LYLE ASSOCIATES A.P. 83-01-02
STA. 26+20 INSTALL 2" AIR VALVE TYPE B
STA. 31+22 INSTALL 2" AIR VALVE TYPE B
MATCH LINE
RUSSIAN RIVER
Creek
R/W S 37° 11' 59.4" E (2500.84')
40+00
25' TEMP. CONSTR. EASEMENT
EAST BAY DEVELOPMENT CO. A.P. 83-020-01
8" FORESTVILLE WATER MAIN
ROAD
RIVER
Mark West
STA. 43+30 SHEET 1 MATCH LINE
38" CTNWD
18" CTNWD
12" WLO
2-40' BAYS
25+00
30+00
35+00
E 1,745,000
N 303,000
N 302,000
E 1,746,000
R.P. NAIL IN 36" BLK. WALNUT TREE
103.55'
25+35.53 POT.
87.13'
R.P. NAIL IN 24" COTTONWOOD TREE
LAND USE IN THIS AREA HAS BEEN CHANGED FROM ORCHARD TO VINEYARD
REPAIR OF LEAK OF CL2 LINE
2'±
10'±
STA. 36+10 PLAN VIEW CL2 LINE
100 0 100 200
scale feet
HEAD in ft.
SPECIAL
PIPE SIZE & TYPE
REVEGETATION
BEDDING/BACKFILL
WELDED JOINTS
48" x 3/8"
48"
d/D
d/E
d/B
FOR DETAILS SEE DWG. NO. 115
FOR DETAILS SEE DWG. NO. 116
CL2 LINE DRESSER COUPLING TO REPAIR LEAK
EXIST'G GROUND
EL. 56.6
EL. 56
EL. 50
EL. 49
EL. 44
EL. 51.3
EL. 52.3
EL. 16
EL. 17
48" PIPELINE
GRADE TO PREVENT AIR POCKETS
NOTE: POLYETHYLENE WELDED CL2 LINE WAS USED UNDER MARK WEST CREEK + RUSSIAN RIVER. 2 LINES 1 CAPPED OFF
CL2 LINE
8" WATER MAIN
MATCH LINE
STA. 20+18.98 VERT.
STA. 20+44 VERT.
STA. 24+03 INSTALL WARNING SIGN
STA. 26+20 INSTALL 2" AIR VALVE TYPE B
STA. 31+22 INSTALL 2" AIR VALVE TYPE B
STA. 36+10 INSTALL WARNING SIGN
STA. 42+95
STA. 43+30
MARK WEST CREEK
20+00
25+00
30+00
35+00
40+00
70
60
50
40
30
20
10
Return to Index
NO. DATE REVISION BY
AS BUILT
5-16-77
RUSSIAN RIVER-COTATI INTERTIE PROJECT
STA. 20+18.98 TO STA. 43+30
SCALE: 1" = 100'
DATE: JULY 1, 1975
APPROVED CHIEF ENGINEER
DRAWN
CHECKED
SONOMA COUNTY WATER AGENCY
DESIGNED
SUBMITTED
DRAWING NUMBER
60-4-102.104

No	DATE	REVISION	By
		AS BUILT	

RUSSIAN RIVER–COTATI INTERTIE PROJECT
STA. 43+30 TO STA. 73+80

SCALE: 1" = 100'
DATE: JULY 1, 1975
APPROVED CHIEF ENGINEER RE 8271
DRAWN s.f.m.
CHECKED

SONOMA COUNTY WATER AGENCY

DESIGNED: K. Schulein
SUBMITTED
DRAWING NUMBER 60-4-102.105

SHEET NO. 5

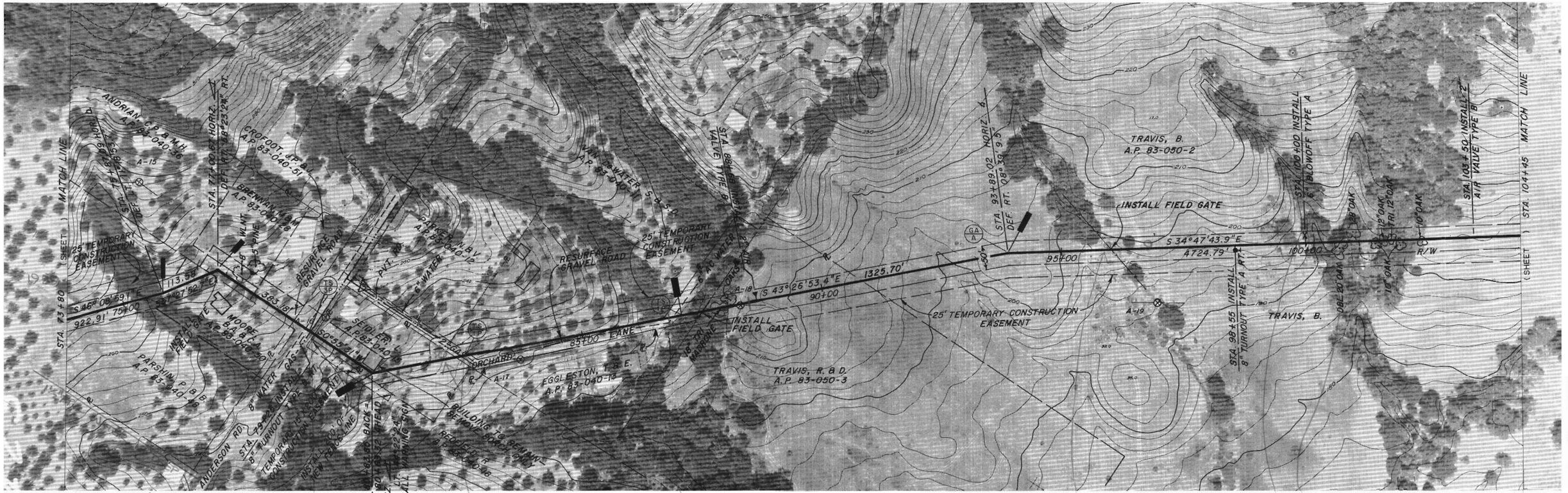

HEAD in ft.	260		~~280~~ 320		~~300~~ 320		320
SPECIAL	WELDED JOINTS	WELDED JOINTS		WELDED JOINTS	WELDED JOINT		WELDED JOINTS
PIPE SIZE & TYPE	48"						48"
REVEGETATION							
BEDDING/BACKFILL	d/E	d/C	d/E	d/E	d/E	d/D	d/D

Return to Index

No.	DATE	REVISION	By
		AS BUILT 5-18-77	

RUSSIAN RIVER-COTATI INTERTIE PROJECT

STA. 73+80 TO STA. 104+45

SCALE 1" = 100' | APPROVED CHIEF ENGINEER | DRAWN .6fm

DATE JULY 1, 1975 | RE 827 | CHECKED

SONOMA COUNTY WATER AGENCY

DESIGNED R.E. Schuler | SUBMITTED | DRAWING NUMBER 60-4-102.106

SHEET NO. 6

STA. 104+45 (SHEET) MATCH LINE

TRAVIS, B.
A.P. 83-050-2

R/W

50'

105+00

110+00

25' TEMPORARY CONSTRUCTION EASEMENT

TRAVIS, B

INSTALL 2" AIR VALVE TYPE B

STA. 115+80

115+00

120+00

SHALE ROAD

A-25

VINEYARD

T S 2P

S 34° 47' 43.9" E

(4724.79')

STA. 126+95 INSTALL 10" SLOW-CLOSING AIR VALVE

125+00

INSTALL 420' OF 24" CMP DRAIN

2" W

HALLBERG, R.J.

HALLBERG, R.J.
A.P. 78-050-2, 3, 7

VINEYARD

DIRT ROAD

ORCHARD HAS BEEN REMOVED

STA. 130+00 INSTALL 2" AIR VALVE TYPE B

130+00

A-26

DIRT ROAD

VINEYARD

10' EASEMENT

50'

STA. 134+00 (SHEET) MATCH LINE

E 1,750,000

N 295,000

E 1,751,000

100 0 100 200
scale feet

STA 124+87.11

STA 125+84.11

HEAD in ft.	320		320 ~~300~~		320 ~~280~~		260		~~240~~ 260		~~220~~ 260
SPECIAL				WELD JTS				WELD JOINTS			
PIPE SIZE & TYPE	48"								48"		
REVEGETATION										d/B	d/B
BEDDING/BACKFILL	d/D			d/D			d/D			d/D (NATIVE)	d/D	d/D (NATIVE)

220
210
200
190
180

290
280
270

STA. 104+45 MATCH LINE

EXISTING GROUND

EL 201

GRADE TO PREVENT AIR POCKETS

215

220

STA. 113+70 INSTALL 2" AIR VALVE TYPE B

STA. 114+30

STA. 116+30

240

230

220

EXISTING GROUND

STA. 120+75 CREEK

EL. 251

EL 229

STA. 123+00

STA 124+87.11

d/C

270

2" W

INSTALL WARNING SIGN

LOCATION OF TIE WIRES ADJED. TO CMP DRAIN FOR SLOW CLOSING AIR VALVE

EXISTING GROUND

48" PIPELINE

270

INSULATED FLANGES

STA. 126+95 INSTALL 10" SLOW-CLOSING AIR VALVE

INSTALL 420' OF 24" CMP DRAIN
SEE DWG. 121

STA. 130+85 INSTALL 2" AIR VALVE TYPE B

STA. 134+00

MATCH LINE

130+00

STA 125+84.11

STA. 118+80 INSTALL 2" AIR VALVE TYPE B

GRADE TO PREVENT AIR POCKETS

105+00 110+00 115+00 120+00 125+00

Return to Index

No.	DATE	REVISION	By
		AS BUILT	
		date 5-18-77	

RUSSIAN RIVER - COTATI INTERTIE PROJECT
STA. 104+45 TO STA. 134+00

SCALE 1" = 100' | APPROVED CHIEF ENGINEER | DRAWN stm
DATE JULY 1, 1975 | RE 827 | CHECKED

SONOMA COUNTY WATER AGENCY

DESIGNED R.E. Schuler | SUBMITTED | DRAWING NUMBER 60 - 4 - 102.107

SHEET NO. 7

HEAD in ft. ~~220~~ 260 ~~240~~ 260 260
SPECIAL SONOMA-CUTRER WELDED JOINT
PIPE SIZE & TYPE 48"
REVEGETATION
BEDDING/BACKFILL d/D (NATIVE) d/C d/D (NATIVE) d/C d/D (NATIVE) b/A d/E c/C d/D

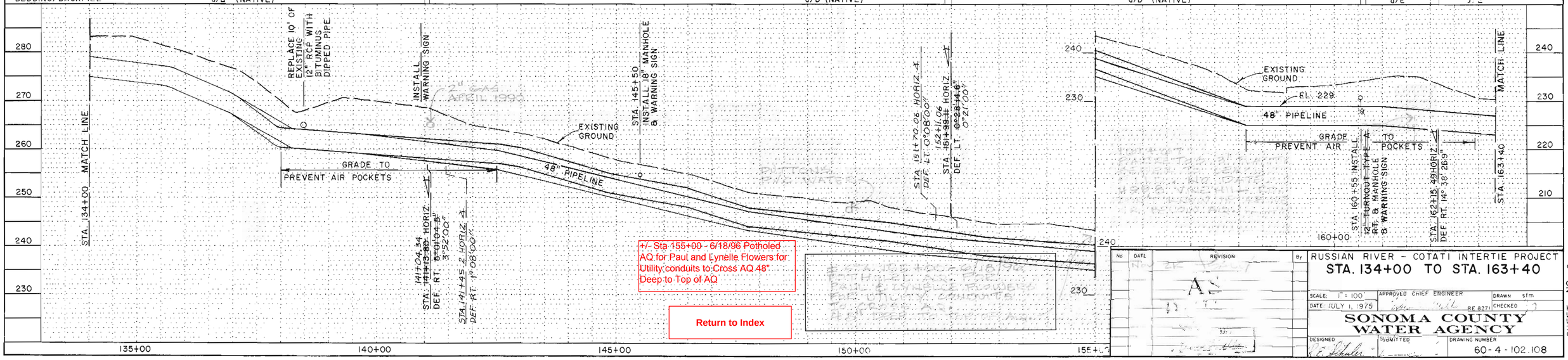

No	DATE	REVISION	By

RUSSIAN RIVER - COTATI INTERTIE PROJECT
STA. 134+00 TO STA. 163+40

SCALE: 1" = 100' | APPROVED CHIEF ENGINEER | DRAWN sfm
DATE: JULY 1, 1975 | RE 8271 | CHECKED

SONOMA COUNTY WATER AGENCY

DESIGNED E. Schuler | SUBMITTED | DRAWING NUMBER 60-4-102.108

SHEET NO. 8

Return to Index

No.	DATE	REVISION	By
1	11/25/75	Correct Swing Tie 173+96.83	GE

AS BUILT

RUSSIAN RIVER - COTATI INTERTIE PROJECT

STA. 163+40 TO STA. 194+10

SCALE: 1" = 100' | DATE: JULY 1, 1975 | APPROVED CHIEF ENGINEER RE 8271 | DRAWN SKMc | CHECKED

SONOMA COUNTY WATER AGENCY

DESIGNED R.E. Schuler | SUBMITTED | DRAWING NUMBER 60-4-102.109

SHEET NO. 9

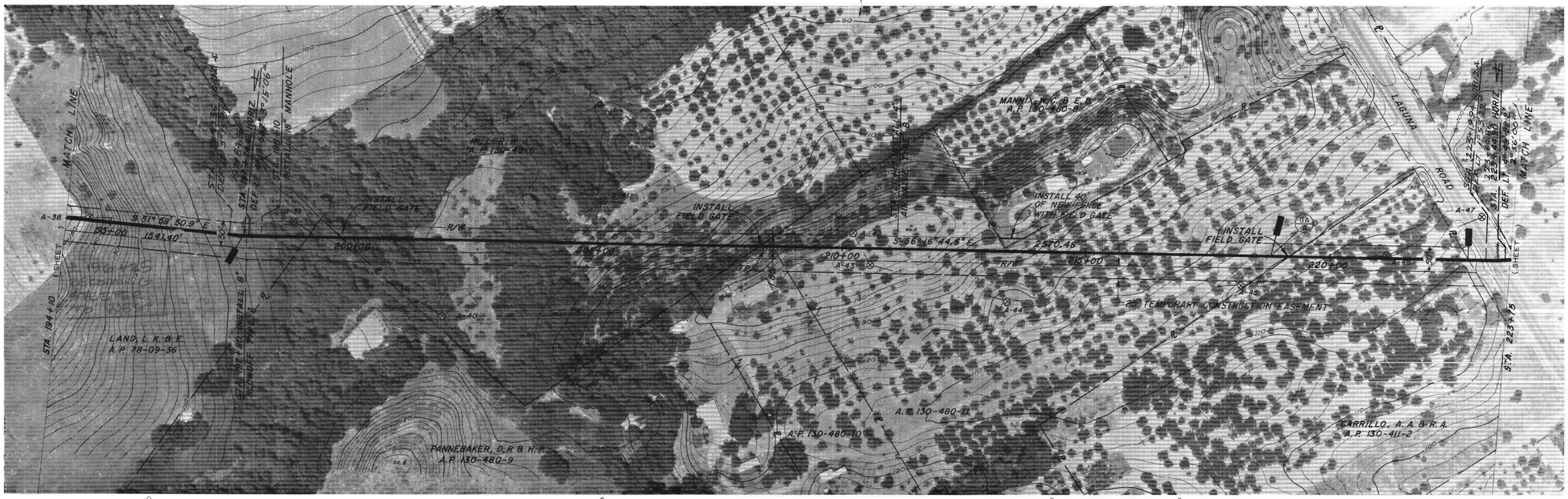

JUNE 1991 - INSTALL ANODES: 1/JOINT, 1 AC BOND/ANODE. TEST STATIONS @ PROPERTY LINES.

HEAD in ft.	360	~~380~~ 440	~~400~~ 440	440 ~~380~~	360	~~340~~ 360	360	~~380~~ 440
SPECIAL	WELDED JOINTS							
PIPE SIZE & TYPE	48"	48"	48"					
REVEGETATION								
BEDDING / BACKFILL	d/D	d/E	d/D	c/C	d/D	b/A	c/B

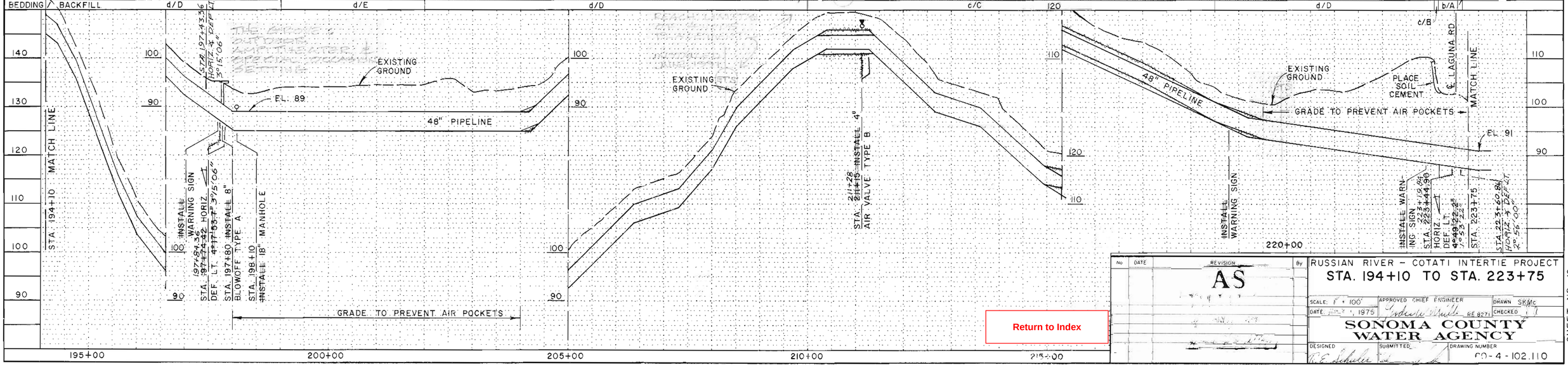

No	DATE	REVISION	By
		AS	

RUSSIAN RIVER - COTATI INTERTIE PROJECT
STA. 194+10 TO STA. 223+75

SCALE: 1" = 100' | APPROVED CHIEF ENGINEER | DRAWN SKMc
DATE: [illegible], 1975 | RE 8271 | CHECKED

SONOMA COUNTY WATER AGENCY

DESIGNED | SUBMITTED | DRAWING NUMBER
68-4-102.110

SHEET NO. 10

Return to Index

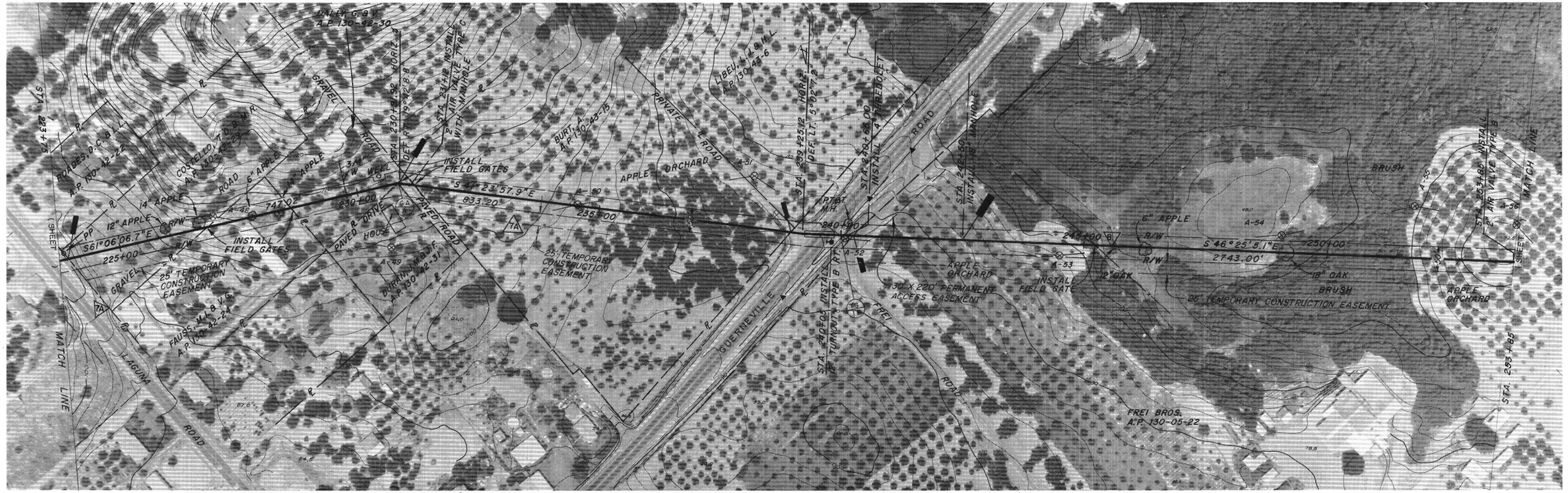

HEAD in ft.	~~380~~ 420	400 440	~~420~~ 440	~~400~~ 440
SPECIAL	WLD. JT.	WLDJT		
PIPE SIZE & TYPE	48"	JACK		
REVEGETATION	c/C	c/A		
BEDDING/BACKFILL	d/D d/E	b/A d/D	b/A c/B b/A	d/D

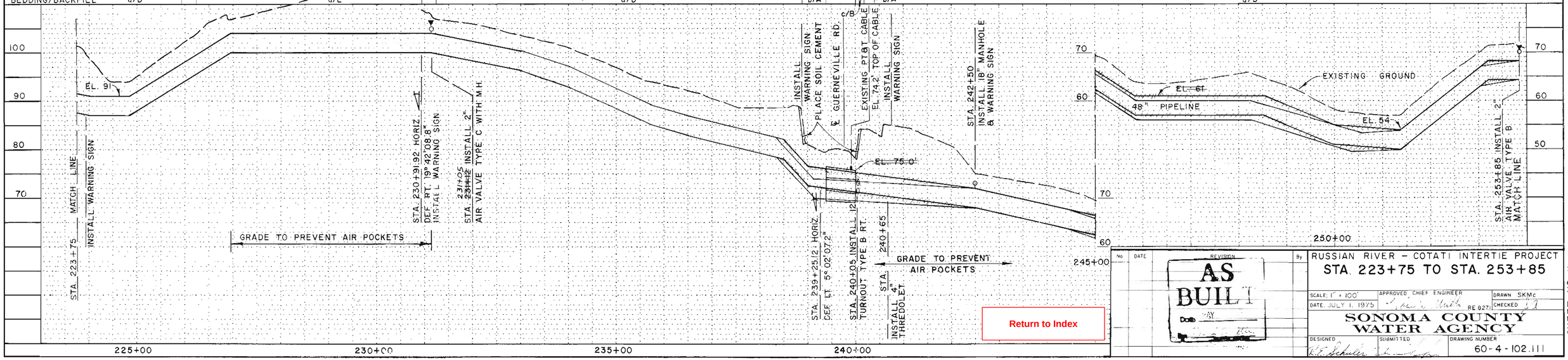

No	DATE	REVISION	By
		AS BUILT	

RUSSIAN RIVER – COTATI INTERTIE PROJECT

STA. 223+75 TO STA. 253+85

SCALE: 1" = 100' | APPROVED CHIEF ENGINEER | DRAWN SKMc

DATE: JULY 1, 1975 | RE 027 | CHECKED

SONOMA COUNTY WATER AGENCY

DESIGNED | SUBMITTED | DRAWING NUMBER

60-4-102.111

SHEET NO. 11

Return to Index

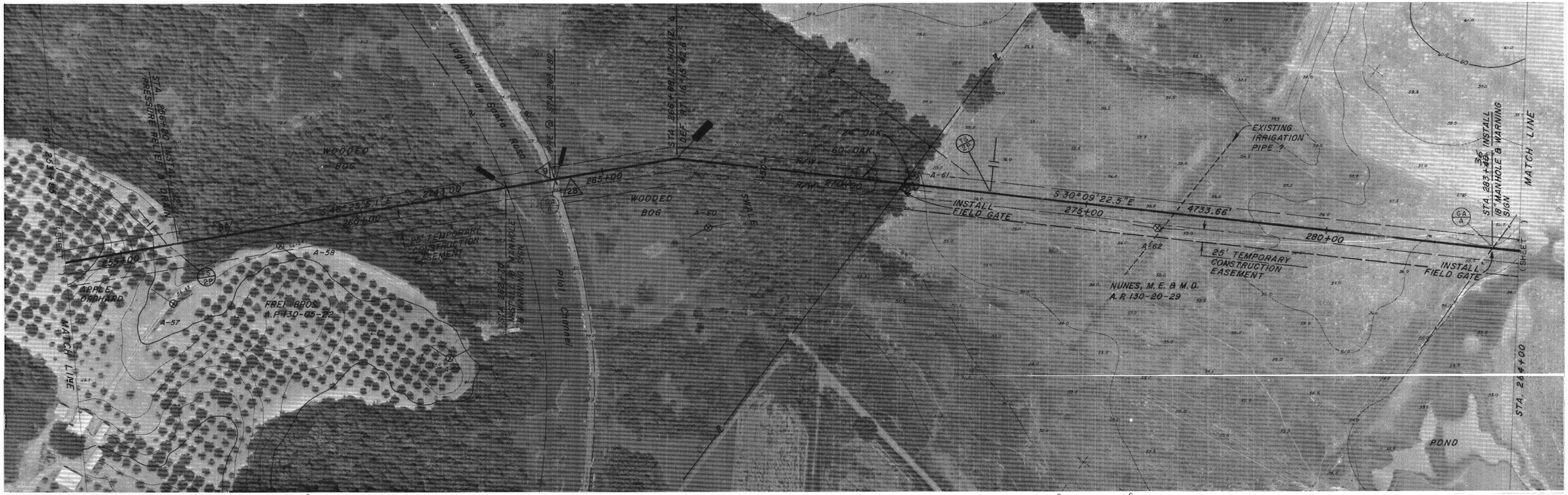

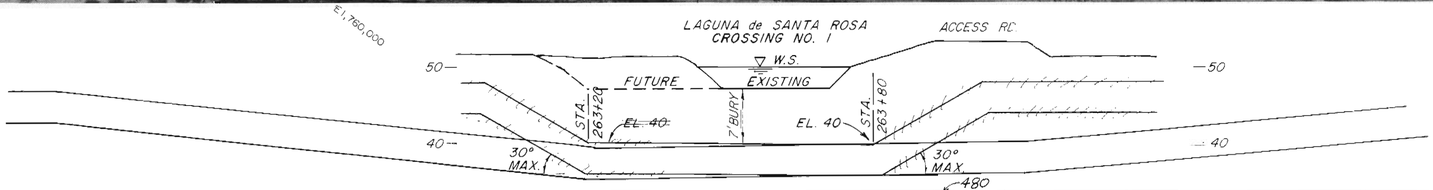

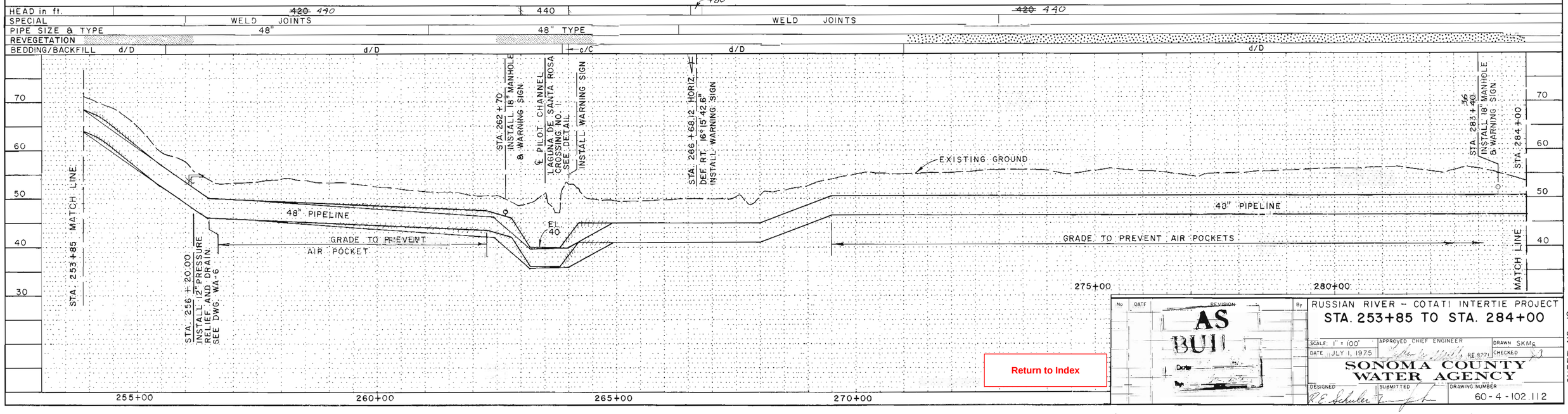

Return to Index

No	DATE	REVISION	By
		AS BUILT	

RUSSIAN RIVER - COTATI INTERTIE PROJECT

STA. 253+85 TO STA. 284+00

SCALE: 1" = 100' | APPROVED CHIEF ENGINEER | DRAWN SKMG

DATE JULY 1, 1975 | RE 8271 | CHECKED

SONOMA COUNTY WATER AGENCY

DESIGNED RE Schuler | SUBMITTED | DRAWING NUMBER 60-4-102.112

SHEET NO. 12

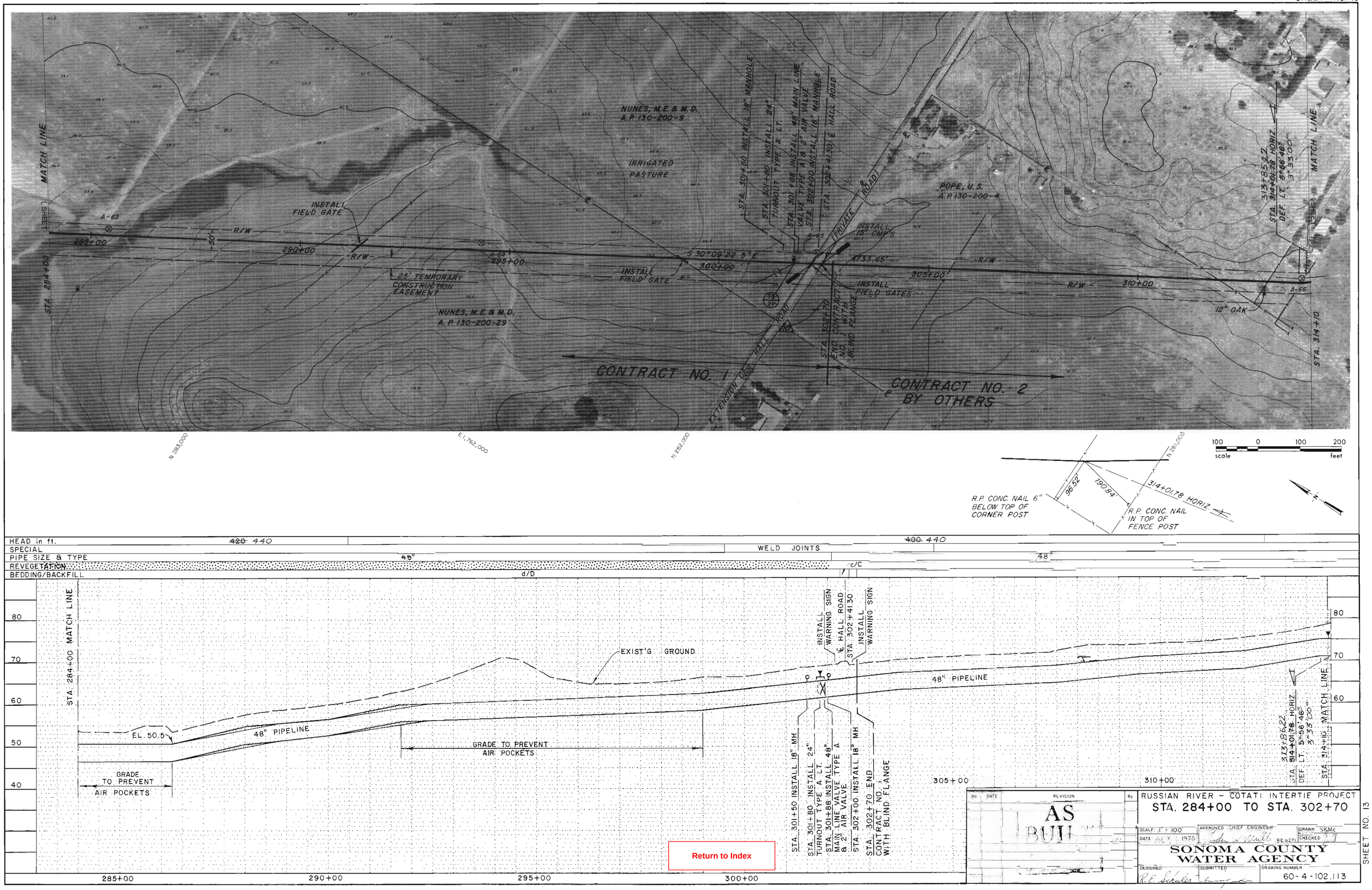

Return to Index

No	DATE	REVISION	By
		AS BUILT	

RUSSIAN RIVER - COTATI INTERTIE PROJECT

STA. 284+00 TO STA. 302+70

SCALE: 1" = 100'
DATE: JULY 1975
APPROVED CHIEF ENGINEER
DRAWN SKMc
CHECKED

SONOMA COUNTY WATER AGENCY

DESIGNED R.E. Schuler
SUBMITTED
DRAWING NUMBER 60-4-102.113

SHEET NO. 13

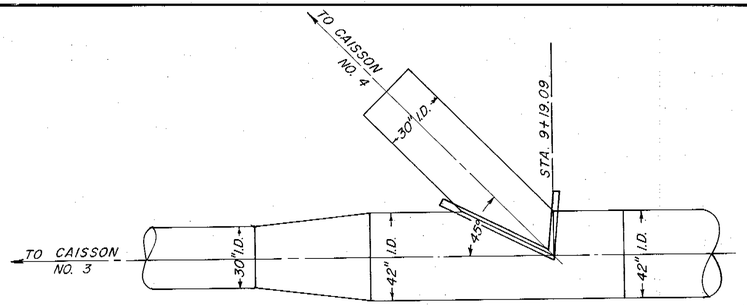

PLAN

REDUCER & 30" LATERAL

NOT TO SCALE

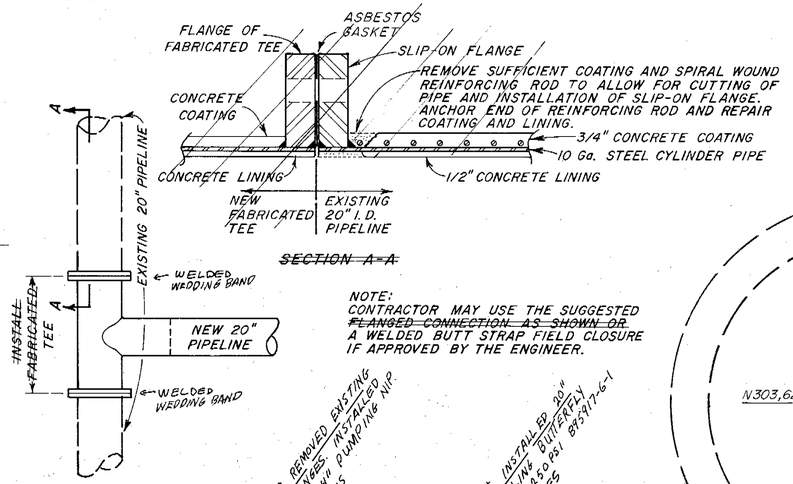

SECTION A-A

NOTE:
CONTRACTOR MAY USE THE SUGGESTED ~~FLANGED CONNECTION AS SHOWN OR~~ A WELDED BUTT STRAP FIELD CLOSURE IF APPROVED BY THE ENGINEER.

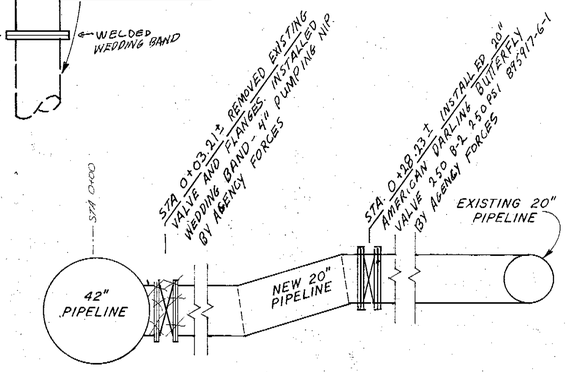

20" WOHLER INTERTIE CONNECTION

NO SCALE

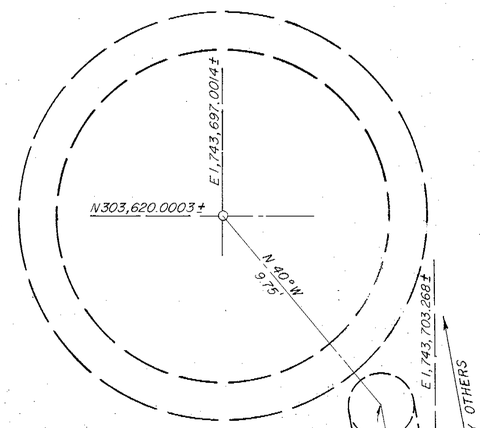

CAISSON NO. 3 (C-1)

SCALE : 1" = 3'

STA. 0+00 CONNECT 2" PVC CHLORINE SOLUTION LINE - SEE DWG. 119. BEGIN 30" I.D. MANIFOLD PIPING WITH FLANGED COUPLING ADAPTER ℄ EL. 36.0' & 2" PVC PIPING @ ℄ EL. 37.25'

N 303,612.532±

ABANDONED AND INSTALLED AT ELEV. 58±

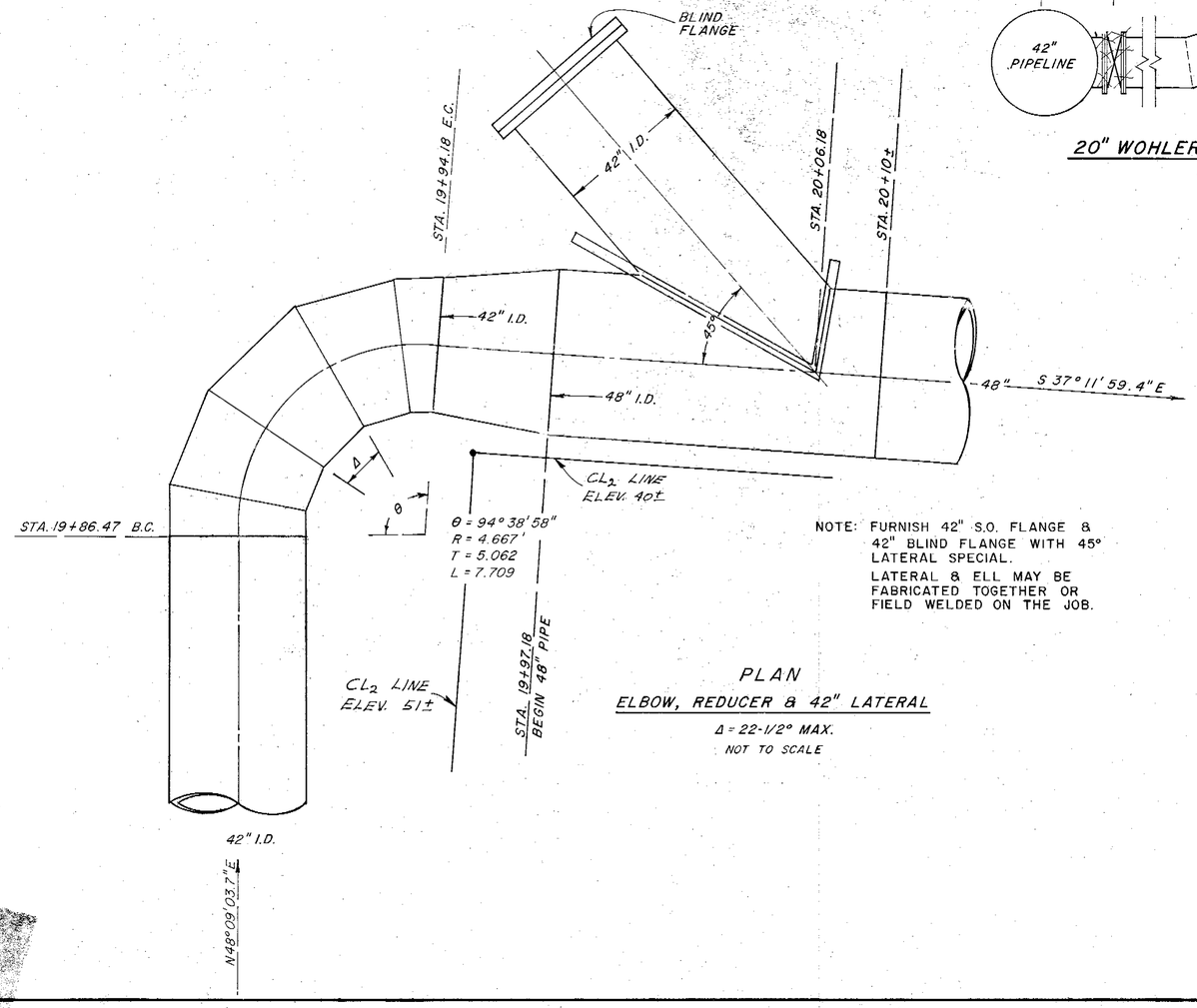

NOTE: FURNISH 42" S.O. FLANGE & 42" BLIND FLANGE WITH 45° LATERAL SPECIAL.
LATERAL & ELL MAY BE FABRICATED TOGETHER OR FIELD WELDED ON THE JOB.

PLAN

ELBOW, REDUCER & 42" LATERAL

Δ = 22-1/2° MAX.

NOT TO SCALE

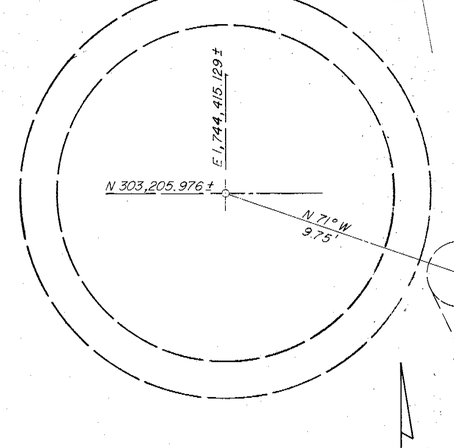

CAISSON NO. 4 (B-5)

SCALE : 1" = 3'

CONNECT 2" PVC CHLORINE SOLUTION LINE - SEE DWG 119 BEGIN 30" I.D. MANIFOLD PIPING FLANGED COUPLING ADAPTER ℄ EL. 36.0' & 2" PVC PIPING @ ℄ EL. 37.25'

N 303,199.939±

ABANDONED AND INSTALLED AT ELEV. 58±

No.	DATE	REVISION	P.
1	Jan 67	Revision to 20" WHOLER INTERTIE connection	

AS BUI

RUSSIAN RIVER-COTATI INTERTIE PROJECT

CONNECTION TO CAISSONS 3 & 4 ELBOWS, REDUCERS, LATERALS

SCALE: AS SHOWN | APPROVED CHIEF ENGINEER | DRAWN SKMc

DATE: JULY 1, 1975 | RE 8271 | CHECKED

SONOMA COUNTY WATER AGENCY

DESIGNED RE Schuler | SUBMITTED | DRAWING NUMBER 60-4-102.114

SHEET NO. 14

Return to Index

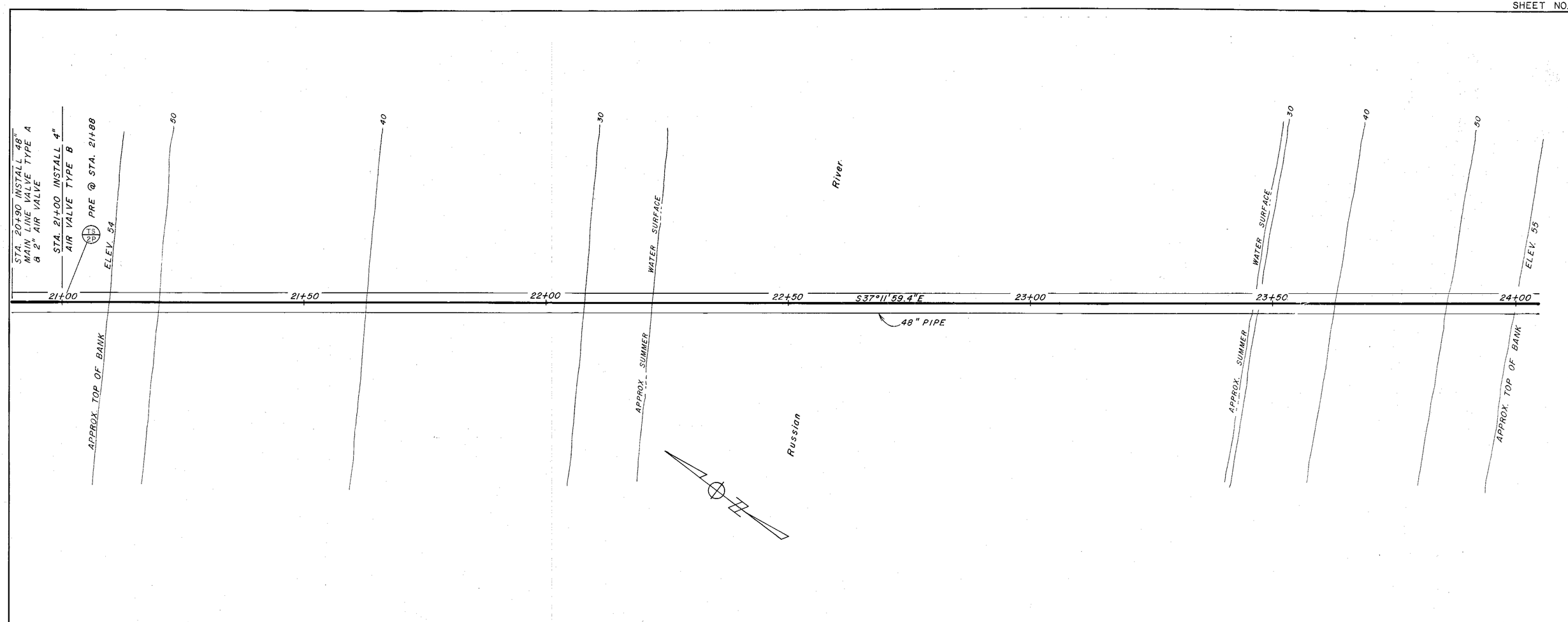

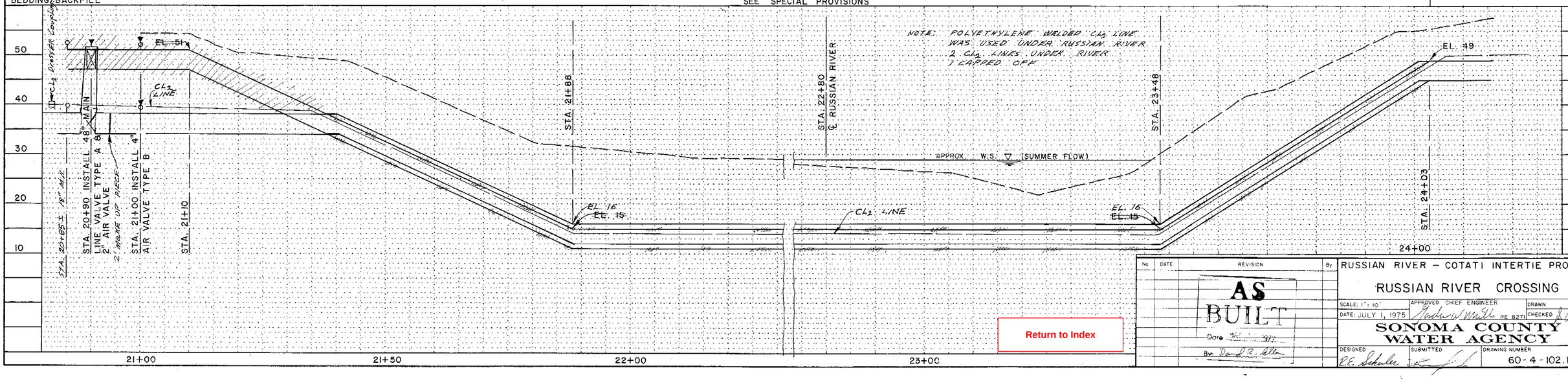

No.	DATE	REVISION	By
		AS BUILT Date 1971 By David R. Allen	

RUSSIAN RIVER – COTATI INTERTIE PROJECT

RUSSIAN RIVER CROSSING

SCALE: 1" = 10'
DATE: JULY 1, 1975
APPROVED CHIEF ENGINEER Gordon W. Mills RE 8271
DRAWN
CHECKED

SONOMA COUNTY WATER AGENCY

DESIGNED R.E. Schuler
SUBMITTED
DRAWING NUMBER 60-4-102.115

SHEET NO. 15

Return to Index

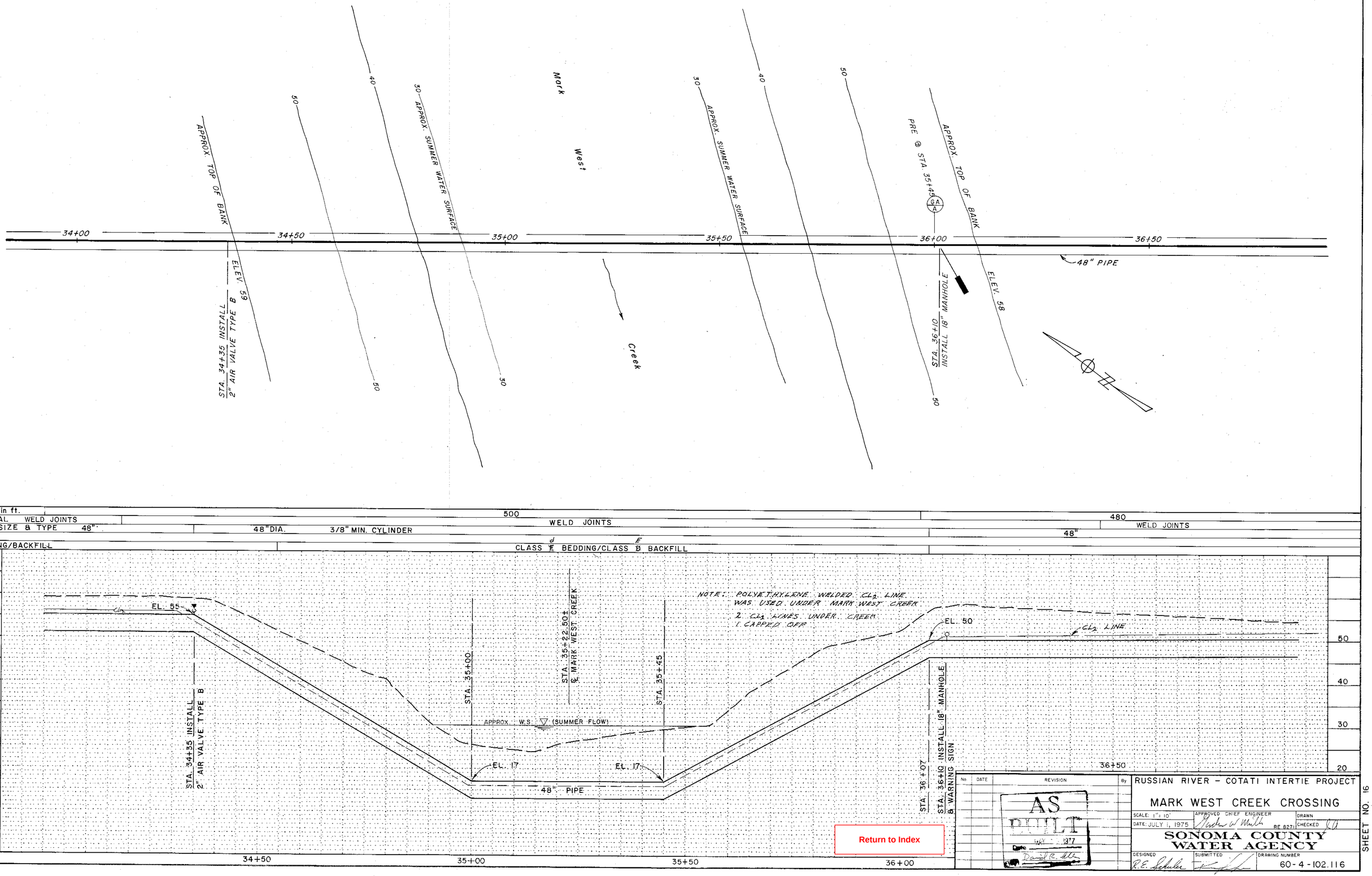

Return to Index

No.	DATE	REVISION	By

AS BUILT

RUSSIAN RIVER – COTATI INTERTIE PROJECT

MARK WEST CREEK CROSSING

SCALE: 1" = 10'

DATE: JULY 1, 1975

APPROVED CHIEF ENGINEER

RE 8271

DRAWN

CHECKED

SONOMA COUNTY WATER AGENCY

DESIGNED R.E. Schuler

SUBMITTED

DRAWING NUMBER 60-4-102.116

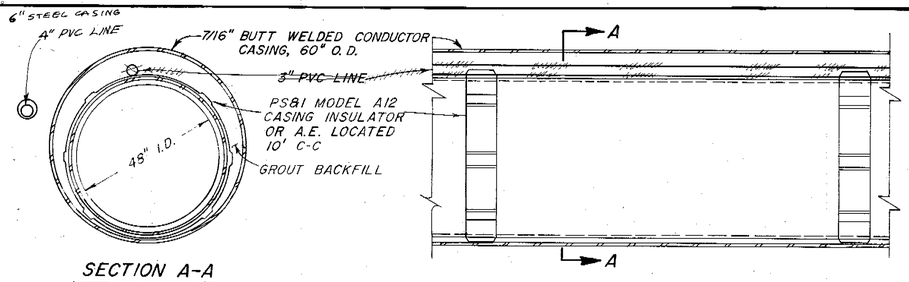

SECTION A-A
LOOKING SOUTH

TYPICAL STEEL ENCASEMENT DETAIL

NO SCALE

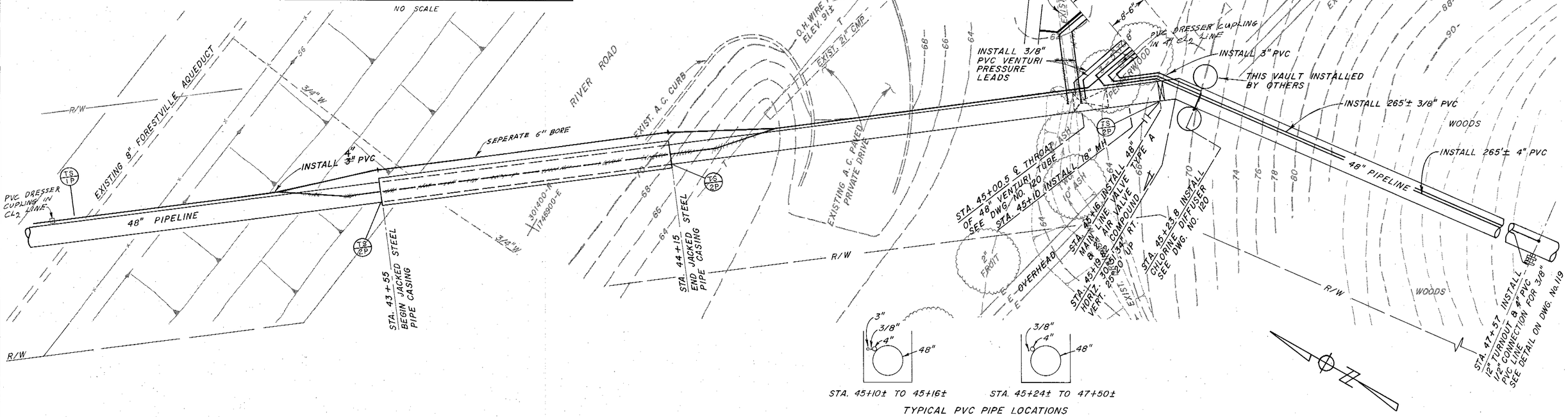

TYPICAL PVC PIPE LOCATIONS

HEAD IN FEET			460		440
SPECIALS	60" JACKED CASING	WELD JOINTS	WELD JOINTS		COAL TAR EPOXY LINED 80' D/S TO 2' U/S OF CHLORINE INJECTORS
PIPE SIZE & TYPE	48"		48"		
BEDDING/BACKFILL	d/D		c/B	b/A	c/B d/E

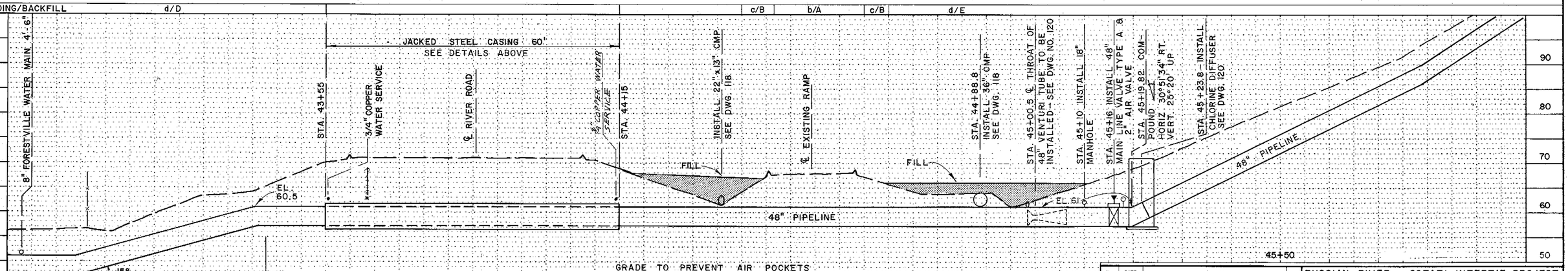

No.	DATE	REVISION	By

MAY 13 1977

RUSSIAN RIVER – COTATI INTERTIE PROJECT

RIVER ROAD CROSSING

SCALE: 1" = 10'
APPROVED CHIEF ENGINEER
DRAWN RM med
DATE: JULY 1, 1975
RE 8271
CHECKED
DESIGNED
SUBMITTED
DRAWING NUMBER 60-4-102.117

SONOMA COUNTY WATER AGENCY

SHEET NO. 17

Return to Index

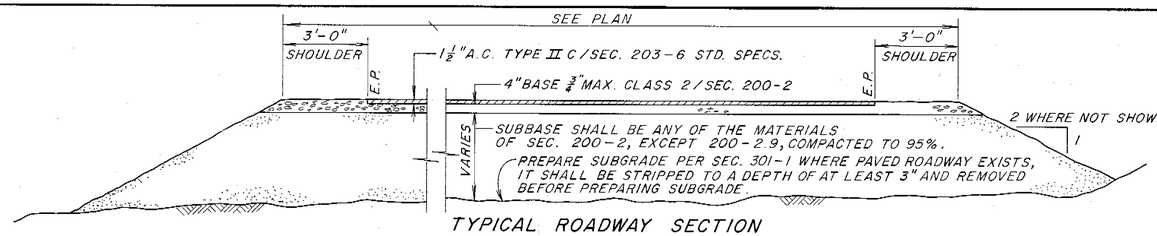

TYPICAL ROADWAY SECTION

NO SCALE

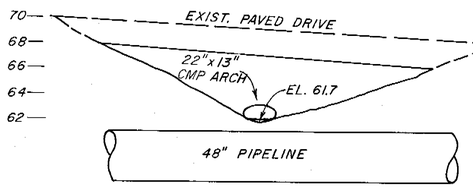

VIEW A-A

SCALE: 1"=6'
STA. 44+36

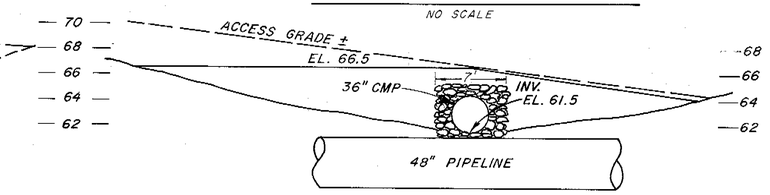

VIEW B-B

SCALE: 1"=6'
STA. 44+88

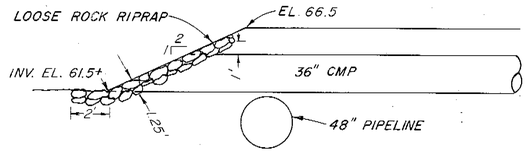

VIEW C-C

SCALE: 1"=6'

301400-N
1747200-E

301400-N
1747100-E

301400-N
1747000-E

301400-N
1746900-E

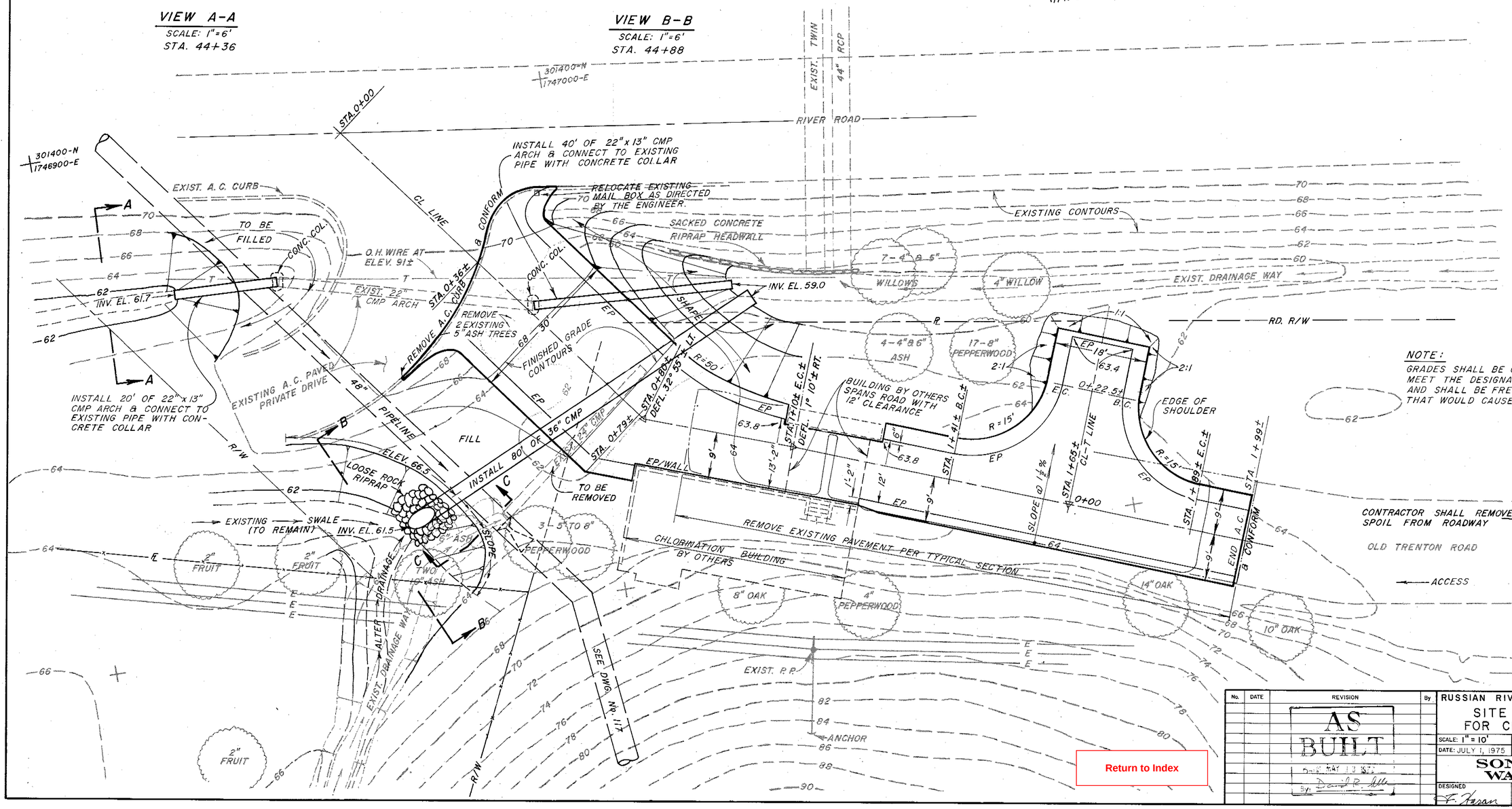

NOTE:
GRADES SHALL BE CONSTRUCTED TO MEET THE DESIGNATED ELEVATIONS AND SHALL BE FREE OF LOW AREAS THAT WOULD CAUSE PONDING.

Return to Index

No.	DATE	REVISION	By
		AS BUILT Date: MAY 13 '82 By: David R. Miller	

RUSSIAN RIVER – COTATI INTERTIE PROJECT

SITE IMPROVEMENT PLAN FOR CHLORINATION BUILDING

SCALE: 1" = 10' | APPROVED CHIEF ENGINEER | DRAWN RM, med

DATE: JULY 1, 1975 | Graham W. Matthews RE 8271 | CHECKED JA

SONOMA COUNTY WATER AGENCY

DESIGNED F. Foran | SUBMITTED | DRAWING NUMBER 60-4-102.118

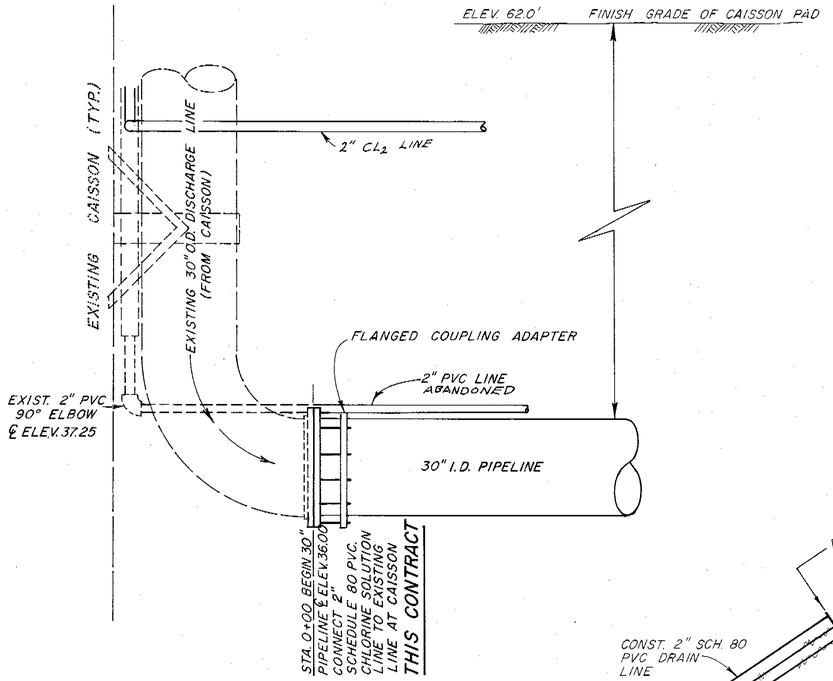

DETAIL B

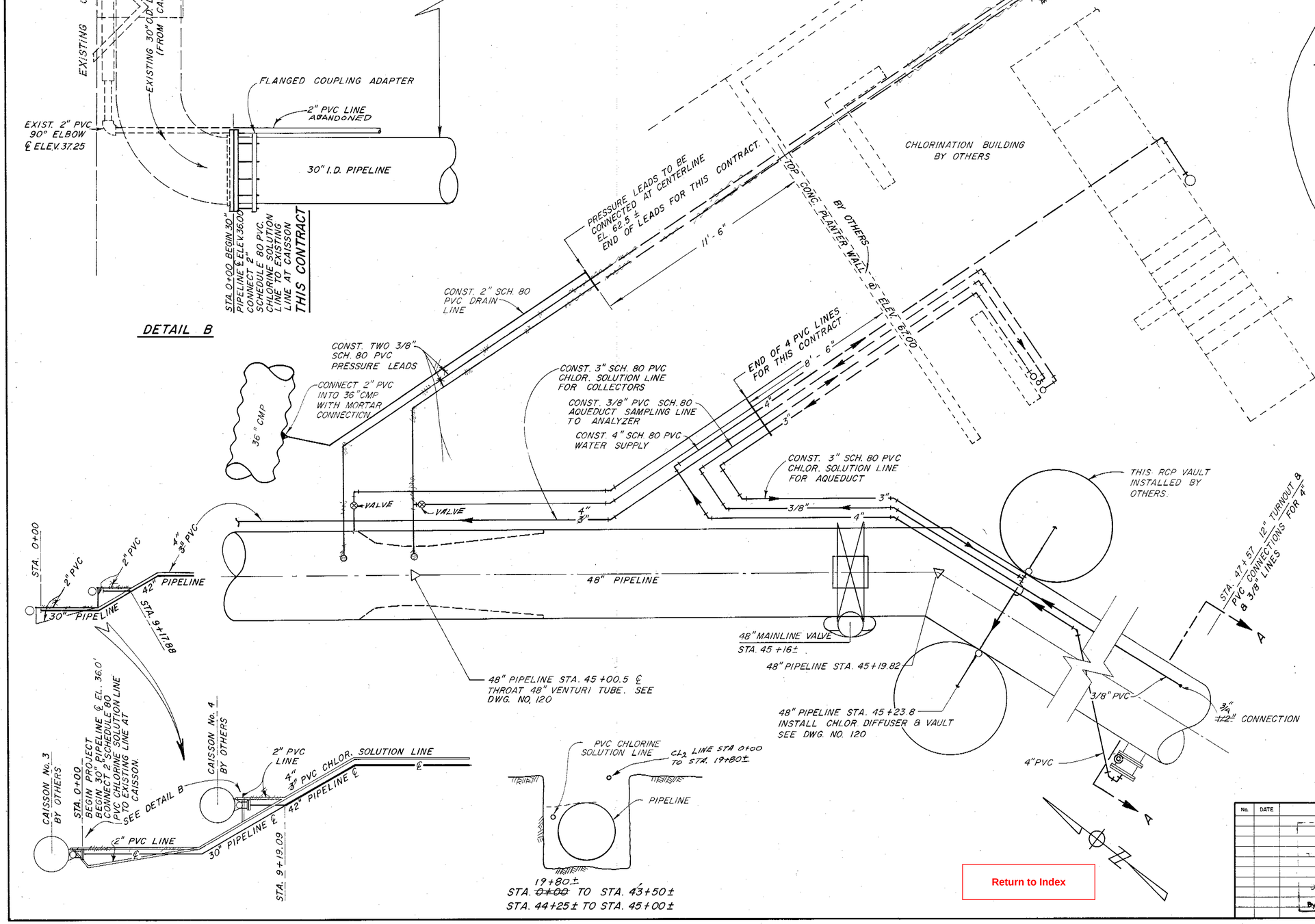

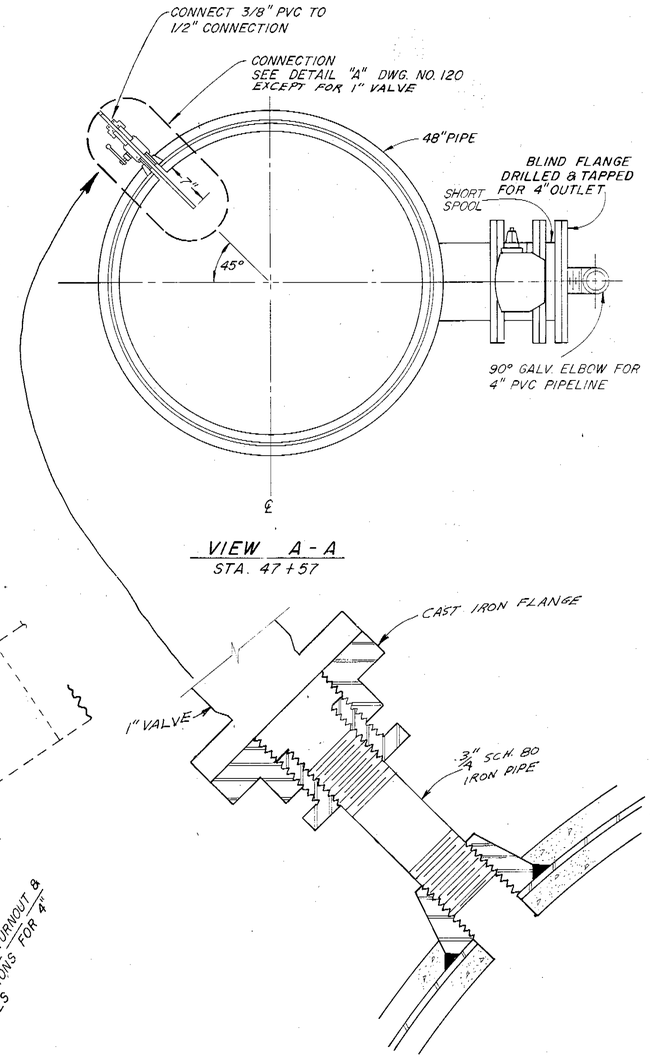

VIEW A-A
STA. 47+57

No.	DATE	REVISION	By
		AS BUILT	
		5-15-77	

RUSSIAN RIVER – COTATI INTERTIE PROJECT
PIPING SCHEMATIC AT CHLORIN BLDG.

SCALE: NONE
DATE: JULY 1, 1975
APPROVED
DRAWN sfm med
CHECKED

SONOMA COUNTY WATER AGENCY

DESIGNED R.E. Schuler
SUBMITTED
DRAWING NUMBER 60-4-102.119

SHEET NO. 19

Return to Index

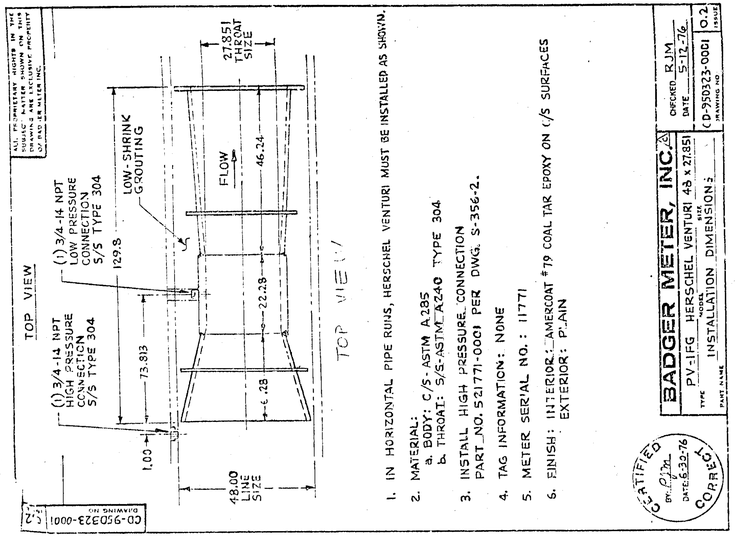

~~ELEVATION~~ PLAN VIEW OF VENTURI TUBE

SCALE: 3/4" = 1'

BAGER METER USED

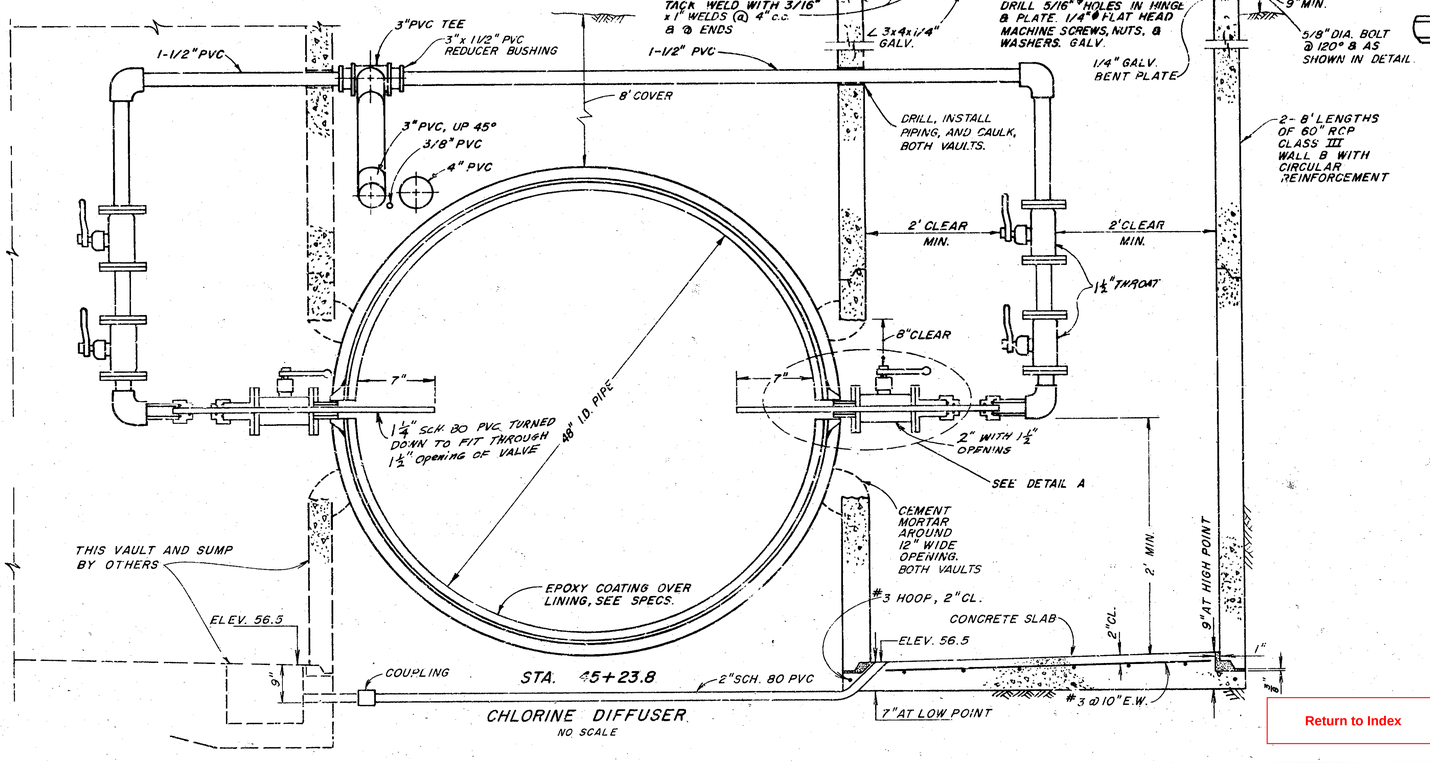

CHLORINE DIFFUSER

NO SCALE

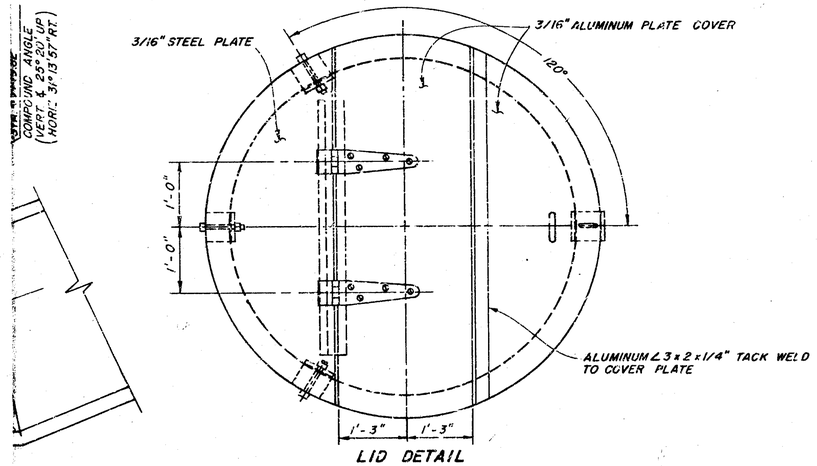

LID DETAIL

NO SCALE

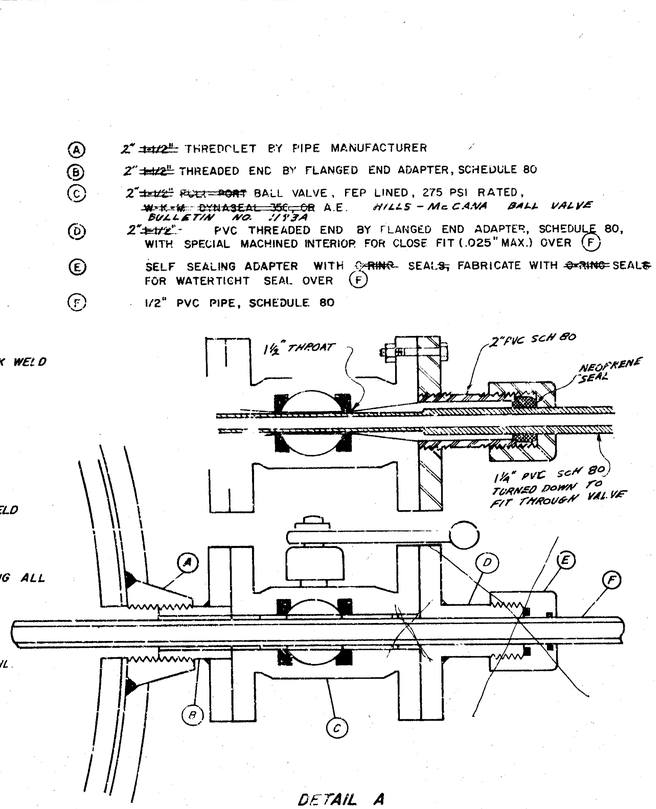

DETAIL A

NO SCALE

Ⓐ 2" ~~1x1/2"~~ THREDOLET BY PIPE MANUFACTURER

Ⓑ 2" ~~1x1/2"~~ THREADED END BY FLANGED END ADAPTER, SCHEDULE 80

Ⓒ 2" ~~1x1/2"~~ ~~PLUG PORT~~ BALL VALVE, FEP LINED, 275 PSI RATED, ~~W-K-M DYNASEAL 35C OR~~ A.E. HILLS - McCANA BALL VALVE BULLETIN NO. 113A

Ⓓ 2" ~~1x1/2"~~ PVC THREADED END BY FLANGED END ADAPTER, SCHEDULE 80, WITH SPECIAL MACHINED INTERIOR FOR CLOSE FIT (.025" MAX.) OVER Ⓕ

Ⓔ SELF SEALING ADAPTER WITH ~~O-RING~~ SEAL ~~S~~, FABRICATE WITH ~~O-RING~~ SEAL ~~S~~ FOR WATERTIGHT SEAL OVER Ⓕ

Ⓕ 1/2" PVC PIPE, SCHEDULE 80

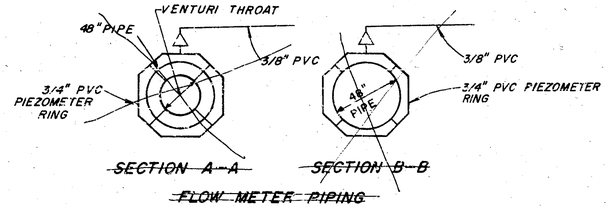

~~SECTION A-A~~ ~~SECTION B-B~~

~~FLOW METER PIPING~~

NO SCALE

Return to Index

No.	DATE	REVISION	By
		AS BUILT Date 5-23-77 By Dan R. Ille	

RUSSIAN RIVER - COTATI INTERTIE PROJECT

VENTURI TUBE & CHLORINE DIFFUSER

SCALE: AS SHOWN | APPROVED Gordon W. Wells | DRAWN A.F

DATE: JULY 1, 1975 | CHECKED SA

SONOMA COUNTY WATER AGENCY

DESIGNED E. Karpan | SUBMITTED | DRAWING NUMBER 60-4-102.120

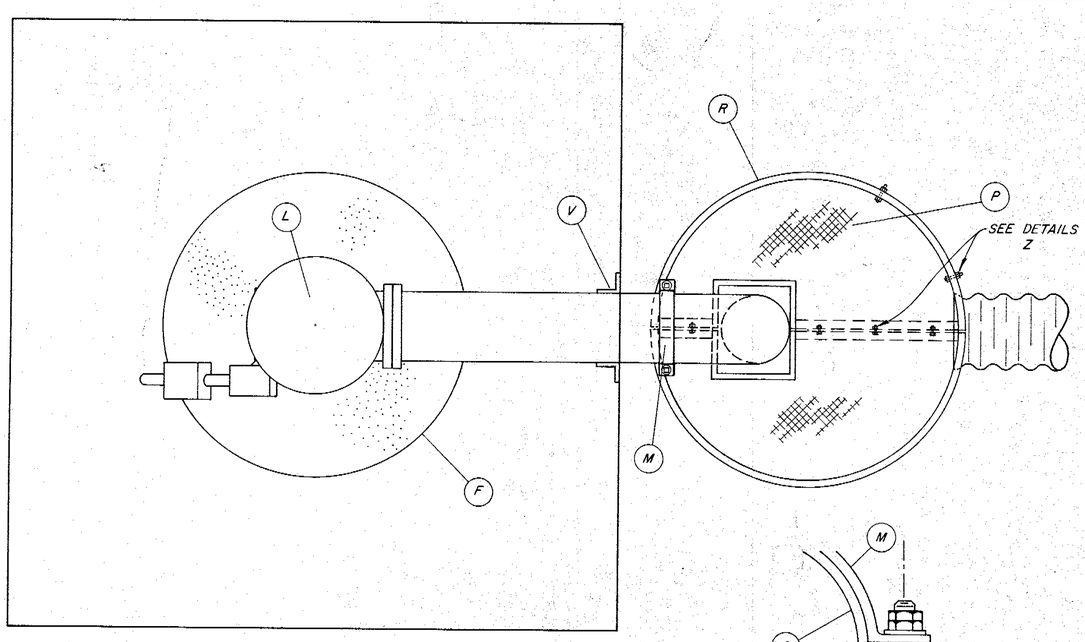

PLAN VIEW
SCALE: 1" = 1'-0"

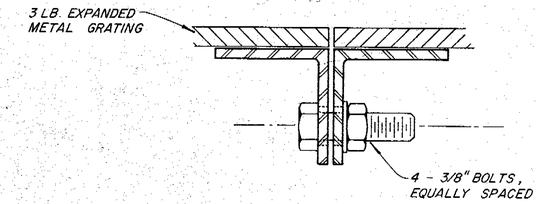

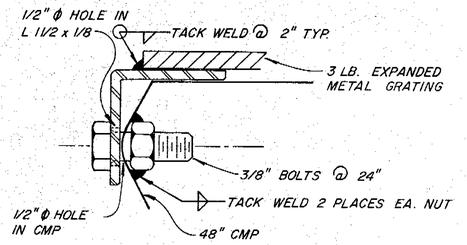

DETAILS Z
SCALE: 1" = 1"

LIST OF MATERIALS

- (A.) METAL HOUSE, 20-GAUGE MIN., MAY BE SMOOTH SKIN, MUST WITHSTAND LIFTING WITH CRANE.
- (B.) REMOVABLE ROOF, SLOPING OR GABLE TYPE.
- (C.) ANGLE IRON STIFFENERS
- (D.) REINFORCED ANGLE IRON BASE FRAME
- (E.) CONC. FLOOR, CLASS 5B 2500, 4" THICK, SLOPING AWAY FROM CENTER.
- (F.) 48", NON-REINFORCED, CONC. PIPE FILLED WITH CONSOLIDATED SAND & SURFACED WITH 2" OF A.C.
- (G.) ANCHOR BOLT INSERT FLUSH WITH TOP OF CONCRETE FLOOR.
- (H.) 3/4" DIA. BOLT WITH FLAT WASHER
- (I.) MANHOLE & COVER - SEPARATE ITEM
- (J.) STEEL RISER TO MATCH VALVE SIZE.
- (K.) BUTTERFLY VALVE TO MATCH VALVE SIZE - SHORT BODIED, RUBBER SEATED WITH OPERATOR, SAME AS SPECIFIED ELSEWHERE UNDER THIS CONTRACT.
- (L.) SLOW CLOSING AIR VALVE, ~~APCO, GOLDEN ANDERSON OR A.E.~~ (SEE SPECIFICATIONS) *WARREN CONTROLS*
- (M.) STEEL SADDLE STRAP - 1/2" x 2"
- (N.) 1" DIA. SCHEDULE 40 PIPE WELDED TO 3/16" PLATE ENCASED IN CONC., 2 REQ'D.
- (O.) SCHEDULE 40 DISCHARGE PIPE TO MATCH VALVE SIZE.
- (P.) EXPANDED METAL GRATING (3 lbs./ft.sq.) CONSTRUCTED IN TWO HALVES FASTENED TO MITERED AND WELDED ANGLE IRON.
- (Q.) 3/4" DIA. SADDLE STRAP BOLTS
- (R.) 48" DIA. CMP SUMP.
- (S.) 1" PIPE CAP DRILLED FOR SADDLE STRAP BOLT.
- (T.) CORRUGATED METAL DRAIN PIPE STARTER SECTION.
- (U.) CORRUGATED METAL DRAIN PIPE - SEPARATE ITEM.
- (V.) STIFFENERS FOR SEPARATE REMOVABLE PANEL TO FACILITATE LIFTING HOUSE OFF SLAB WITHOUT REMOVING DISCHARGE PIPE.

NOTE: ALL METAL OUTSIDE OF HOUSE TO BE GALVANIZED AFTER FABRICATION. BOLTS TO BE CADMIUM PLATED.

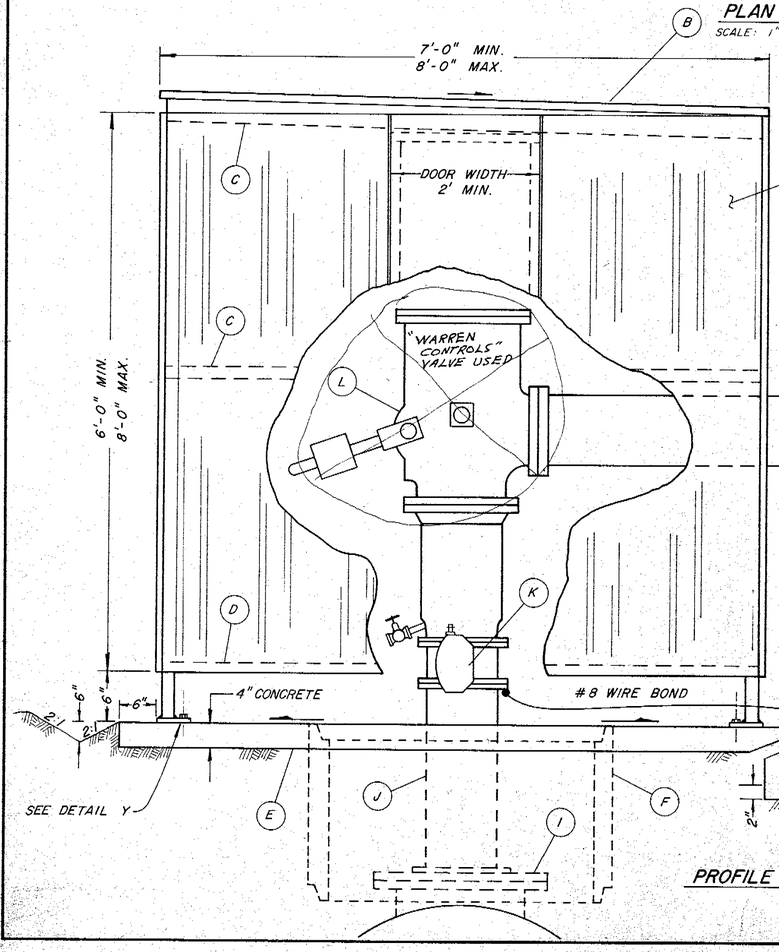

PROFILE OF SLOW CLOSING AIR VALVE
SCALE: 1" = 1'-0"

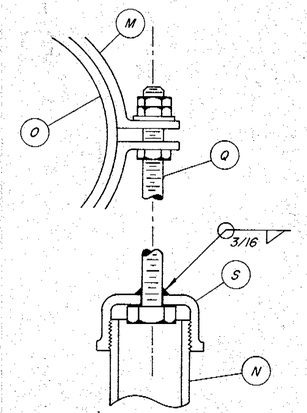

DETAIL X
NO SCALE

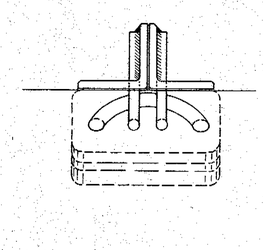

DOOR LOCK STAPLE DETAILS
NO SCALE

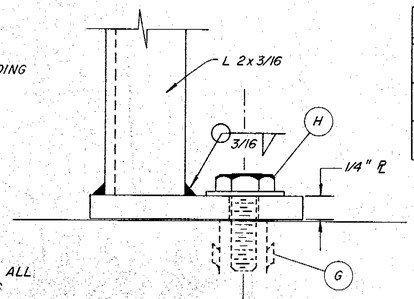

DETAIL Y
NO SCALE

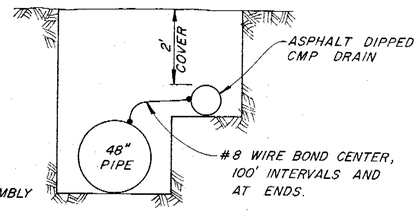

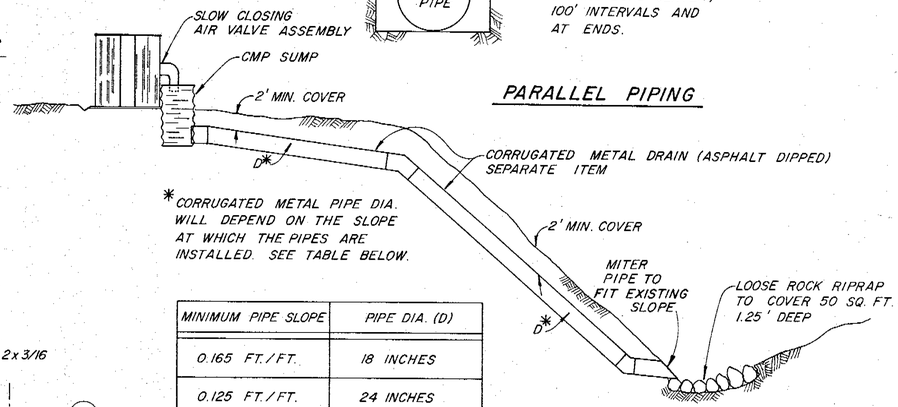

PARALLEL PIPING

* CORRUGATED METAL PIPE DIA. WILL DEPEND ON THE SLOPE AT WHICH THE PIPES ARE INSTALLED. SEE TABLE BELOW.

MINIMUM PIPE SLOPE	PIPE DIA. (D)
0.165 FT./FT.	18 INCHES
0.125 FT./FT.	24 INCHES
0.003 FT./FT.	36 INCHES

DRAIN PIPING & ROCK RIPRAP
NO SCALE

No.	DATE	REVISION	By
		AS BUILT Date MAY 1 2 1977 By	

RUSSIAN RIVER - COTATI INTERTIE PROJECT
SLOW CLOSING AIR VALVE INSTALLATION

SCALE: AS SHOWN | APPROVED CHIEF ENGINEER | DRAWN STM
DATE: JULY 1, 1975 | CHECKED

SONOMA COUNTY WATER AGENCY

DESIGNED R.E. Schuler | SUBMITTED | DRAWING NUMBER 60-4-102.121

SHEET NO. 21 OF 27 SHEETS

Return to Index

MICROFILMED

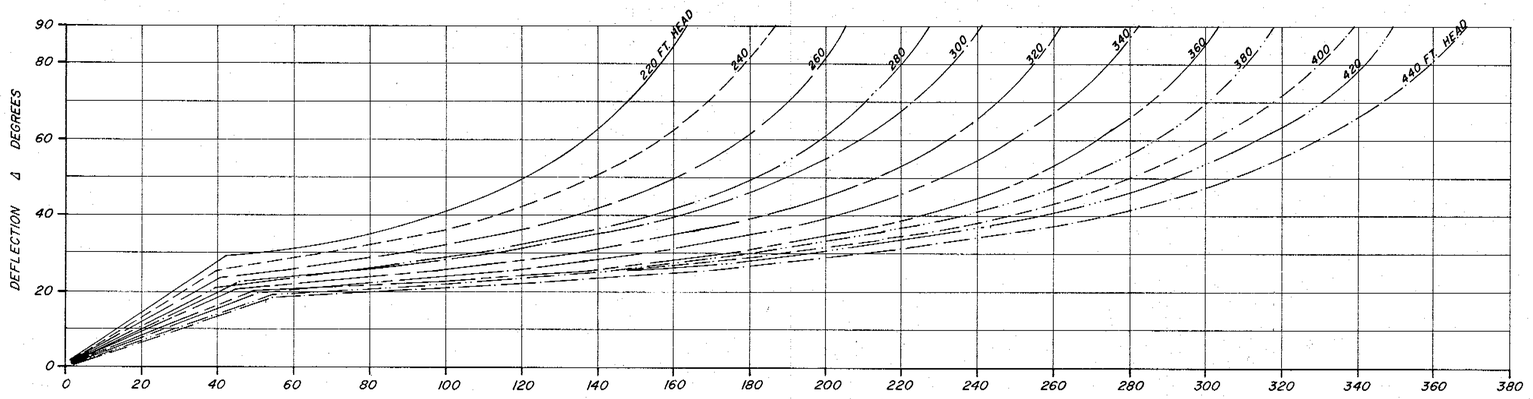

LENGTH OF WELDED JOINTS IN FEET EACH SIDE OF P. I.
48" PIPE - 500 #/FT²
BEARING (SOFT WET CLAY)

IN LAGUNA de SANTA ROSA

STA. 256+00 TO STA. 271+00

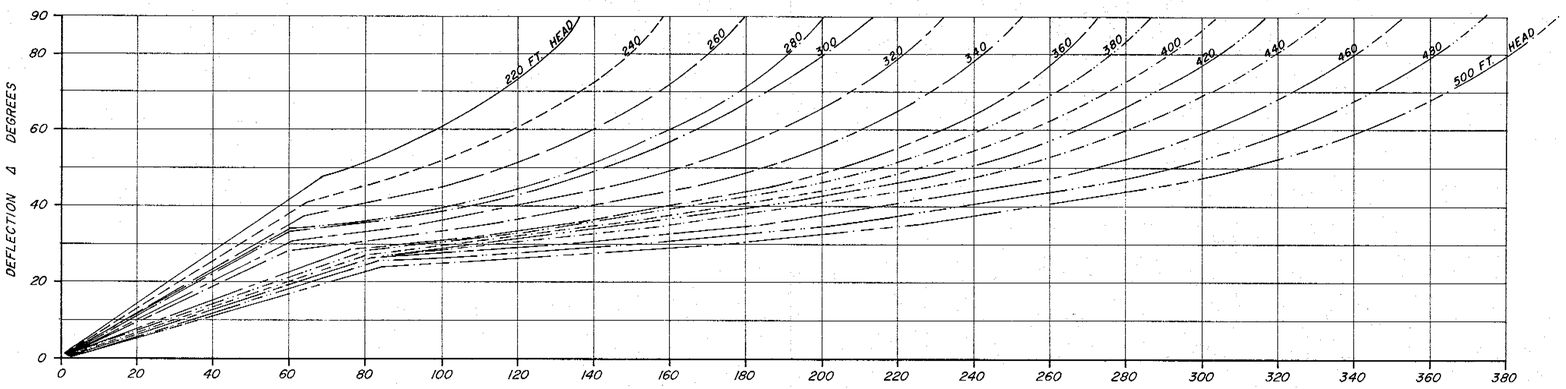

LENGTH OF WELDED JOINTS IN FEET EACH SIDE OF P. I.
48" PIPE - 1000 #/FT²
BEARING

GENERAL

NOTES:

1. ALL HORIZONTAL AND VERTICAL BENDS GREATER THAN 5° SHALL BE TREATED AS TENSION JOINTS AND SHALL BE WELDED IN EACH DIRECTION FROM P.I. FOR THE DISTANCE DENOTED ON THIS DRAWING.
2. ALL WELDED JOINTS SHALL HAVE FULL FILLET WELDS.

Return to Index

No.	DATE	REVISION	By
		MAY 13 1977	

RUSSIAN RIVER-COTATI INTERTIE PROJECT
WELD LENGTH FOR
THRUST ON PIPE BENDS

SCALE:
APPROVED: CHIEF ENGINEER
DRAWN AF med
DATE: JULY 1, 1975
CHECKED SO

SONOMA COUNTY
WATER AGENCY

DESIGNED P.E. Schuler
SUBMITTED
DRAWING NUMBER 60-4-102.123

SHEET NO. 23

MICROFILMED

LEGEND

- S INDICATES DEPTH SAMPLE TAKEN
- SILT
- CLAY
- SAND
- GRAVEL
- LOAM
- CLAYEY SILT
- SANDY SILT
- SANDY CLAY
- CLAYEY SAND
- CLAY & SAND
- SILTY GRAVEL & SAND
- CLAYEY GRAVEL
- GRAVELLY CLAY
- GRAVELLY SAND
- SAND GRAVEL & CLAY
- SILTY CLAY
- SILTY SAND

NOTE: SAMPLES TAKEN BY POWER FLIGHT AUGER AND CLASSIFIED BY OBSERVATION EXCEPT HOLES NO. 3, 4, 5, 7A & 12 WHICH WERE CLASSIFIED BY LABORATORY GRADATION ANALYSIS. SAMPLES FROM C-1 & B-1 WERE TAKEN BY SPLIT SPOON SAMPLER AND CLASSIFIED BY FIELD OBSERVATION. HOLE 28 EXCAVATED BY BACKHOE.

Return to Index

No.	DATE	REVISION	By

RUSSIAN RIVER – COTATI INTERTIE PROJECT
PIPELINE
LOG OF BORINGS

SCALE: NO SCALE
DATE: JULY 1, 1975
APPROVED CHIEF ENGINEER RE 6271
DRAWN
CHECKED

SONOMA COUNTY WATER AGENCY

DESIGNED R.E. Schuler
SUBMITTED
DRAWING NUMBER 60-4-102.124

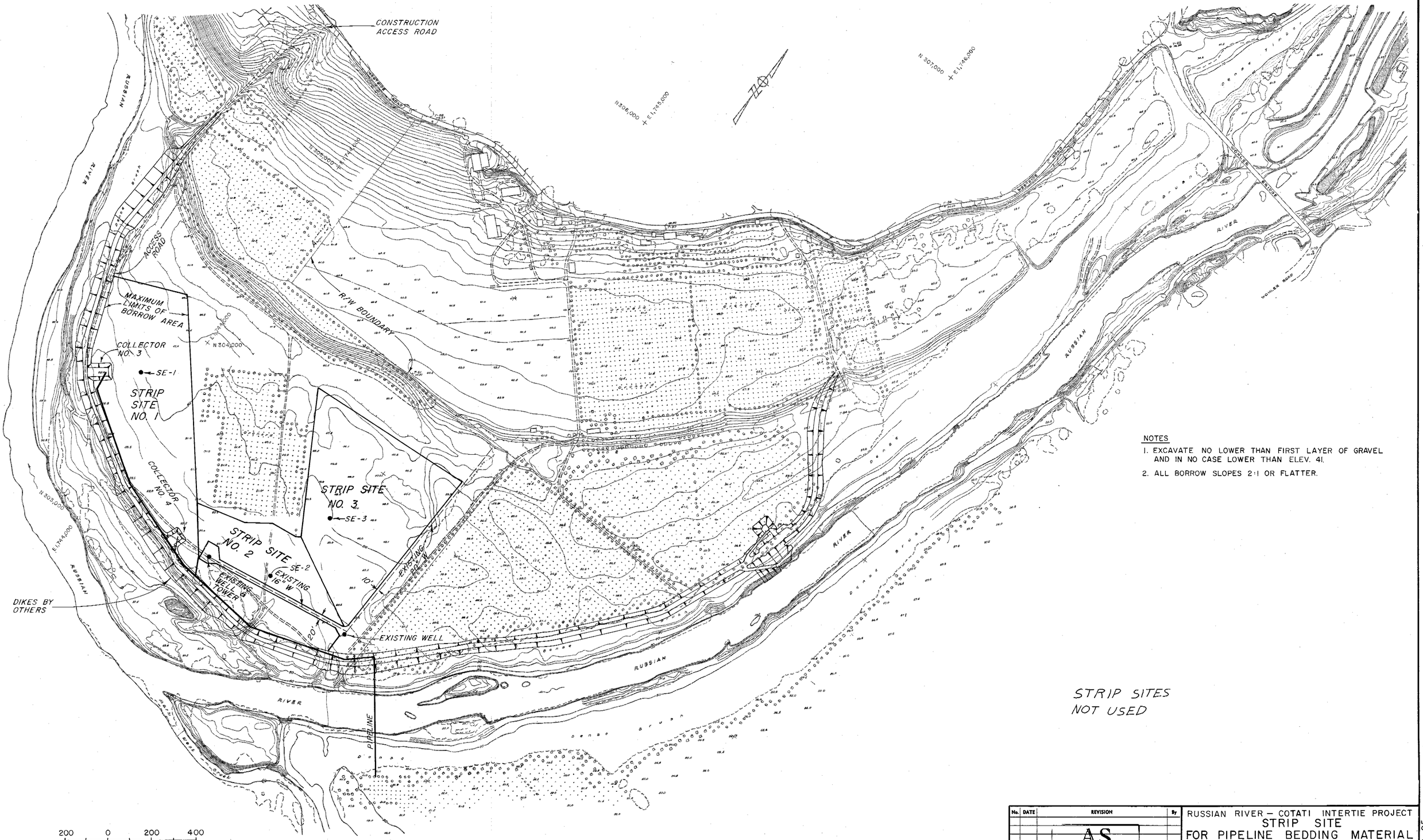

NOTES

1. EXCAVATE NO LOWER THAN FIRST LAYER OF GRAVEL AND IN NO CASE LOWER THAN ELEV. 41.
2. ALL BORROW SLOPES 2:1 OR FLATTER.

STRIP SITES NOT USED

Return to Index

No.	DATE	REVISION	By
		AS BUILT Date ... By: David R. Allen	

RUSSIAN RIVER – COTATI INTERTIE PROJECT
STRIP SITE
FOR PIPELINE BEDDING MATERIAL

SCALE: 1" = 200	APPROVED CHIEF ENGINEER	DRAWN
DATE: JULY 1, 1975	RE 8271	CHECKED SB

SONOMA COUNTY WATER AGENCY

DESIGNED	SUBMITTED	DRAWING NUMBER
R.E. Schuler		60-4-102.125

SHEET NO. 25

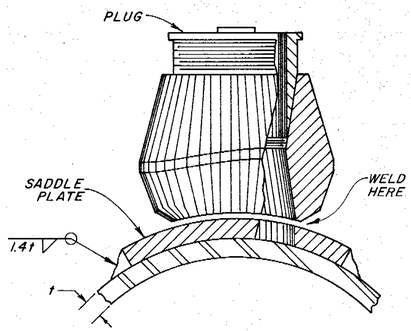

THREDOLET
NO SCALE

NOTE: PLACE THREDOLET BELOW TOP OF PIPE BUT ABOVE SPRINGLINE.

STATIONS	H
87 + 80	7
100 + 50	2
100 + 90	2
101 + 90	2
114 + 30	3
116 + 30	3
119 + 50	2
120 + 10	3
120 + 90	6
122 + 50	5

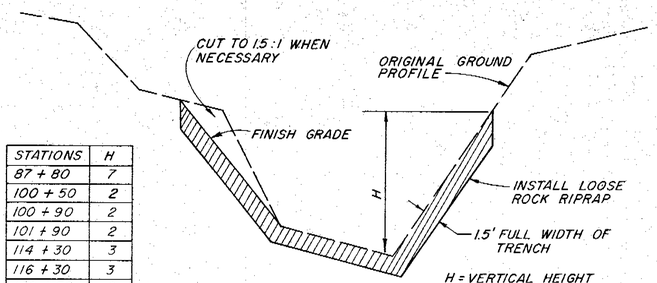

FINISH GRADE SHALL FOLLOW EXISTING GROUND PROFILE EXCEPT SHALL NOT EXCEED 1.5 HORIZONTAL TO 1.0 VERTICAL.
INSTALL RIPRAP AT STATIONS SHOWN IN TABLE.

H = VERTICAL HEIGHT OF RIPRAP IN FEET

LOOSE ROCK RIPRAP
NO SCALE

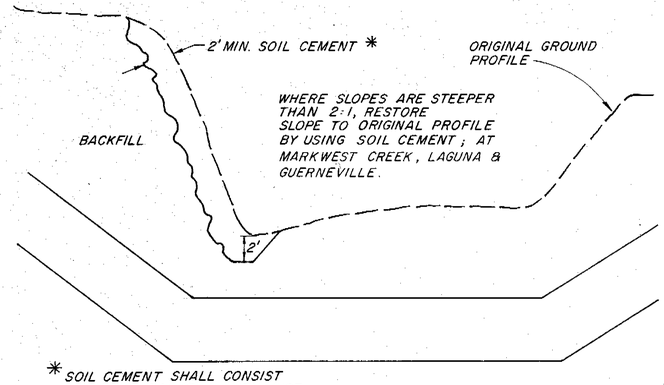

* SOIL CEMENT SHALL CONSIST OF NATIVE BACKFILL WITH JUST ENOUGH PORTLAND CEMENT BLENDED AND COMPACTED TO APPROXIMATE THE HARDNESS OF THE ADJACENT SOIL.

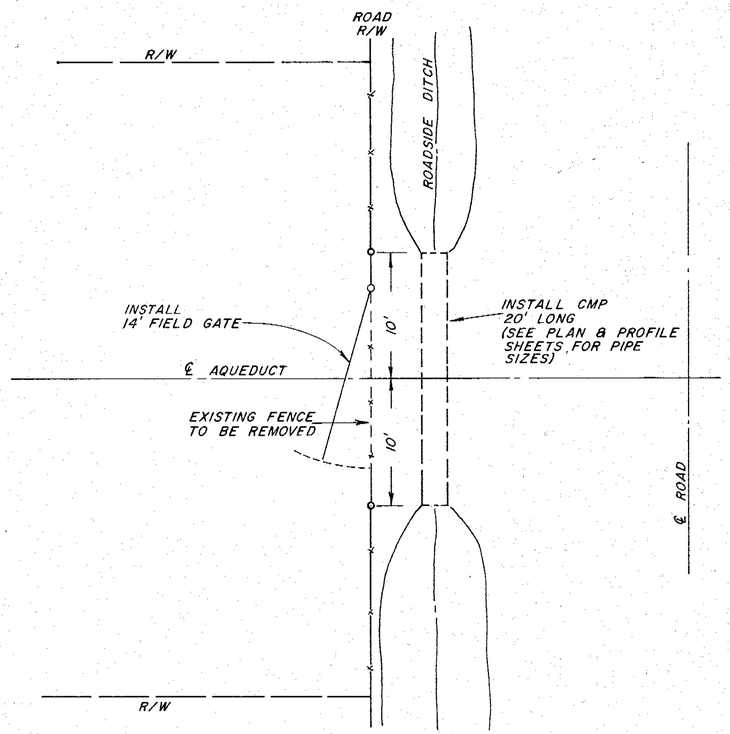

PLAN
GATE & CMP LOCATION
SCALE 1" = 6'

SLOPE PROTECTION
NO SCALE

CC 18

BLACK ON ORANGE
72" x 72" 8" LETTERS

CC 16

BLACK ON ORANGE
48" x 48" 7" LETTERS

CC 9

BLACK ON ORANGE
48" x 48" 7" LETTERS

NOTE:
ALL SIGNS SHALL MEET STATE OF CALIF. STANDARDS, MOUNTED ON POSTS, AND PLACED ON EDGE OF ROAD AT THE DISTANCES SHOWN IN ( ) FROM TRENCH.

RIVER RD. — JACKED
ANDERSON RD. — CC 18 BOTH SIDES TRENCH
VINEHILL RD. — CC 18 (700'±) CC 16 (500'±) CC 9 (200'±)
LAGUNA RD. — CC 18 (700'±) CC 16 (500'±) CC 9 (200'±)
GUERNEVILLE RD. — JACKED

BASIC SIGNING FOR OUTSIDE PROJECT LIMITS

Return to Index

No.	DATE	REVISION	By
		AS BUILT Date MAY 1977 By:	

RUSSIAN RIVER — COTATI INTERTIE PROJECT

MISCELLANEOUS DETAILS

SCALE: AS SHOWN | APPROVED CHIEF ENGINEER | DRAWN
DATE: JULY 1, 1975 | RE 8271 | CHECKED

SONOMA COUNTY WATER AGENCY

DESIGNED | SUBMITTED | DRAWING NUMBER
R.E. Schuler | 60-4-102.126

SHEET NO. 26

MICROFILMED

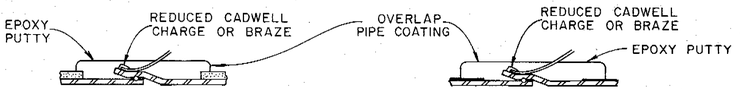

MORTAR COATED STEEL PIPE

COAL TAR COATED STEEL PIPE

CONNECTION DETAILS

ALTERNATE TO CADWELL PROCESS:
CONNECT ANODE LEAD TO BONDING ROD WITH PENN UNION S-2 SPLIT BOLT CONNECTORS.

NOTES - CONNECTION DETAILS

1. WHERE POSSIBLE, SHIFT CONNECTION TO NEAREST PIPE JOINT. ALLOW 12" LOOP AS SLACK AT PIPE CONNECTION.
2. MIX EPOXY PUTTY (EPOXYBOND PLUMBER SEAL) AS DIRECTED & APPLY FIRMLY TO PROVIDE A WATER-TIGHT SEAL AT LEAST 1/4" THICK OVER PIPE COATING. OVERLAP COATING & WIRE INSULATION BY 1/2"

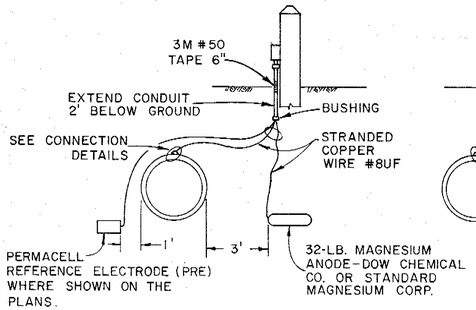

TYPE A GALVANIC ANODE WITH ELECTROLYSIS TEST LEAD INSTALLATION

NOTES -
1. CLEARANCE SHALL NOT BE LESS THAN 3'.
2. TERMINATE LEADS IN CONDUIT TEST OUTLET.
3. ANODE IS TO BE INSTALLED HORIZONTALLY AND SHALL BE LEVEL WITH THE INVERT OF THE PIPE.

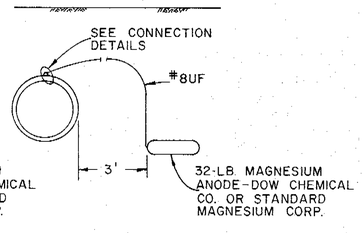

TYPE B GALVANIC ANODE WITHOUT TEST LEAD INSTALLATION

NOTES -
1. ALTERNATE CONNECTION IN RESTRICTED SURFACE ACCESS CONDITIONS

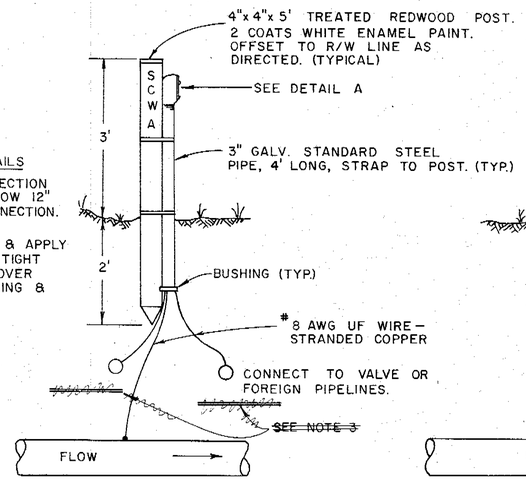

ONE POINT STATION TYPE A

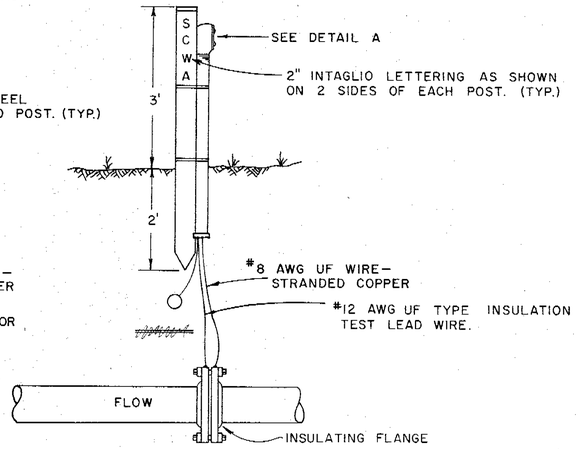

TWO POINT STATION TYPE A

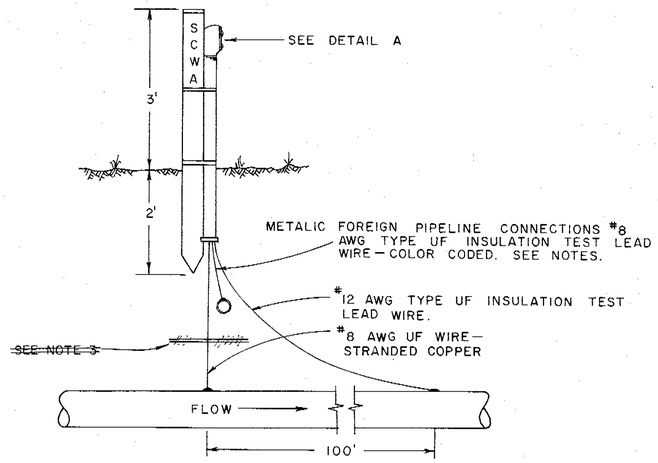

THREE POINT STATION TYPE A

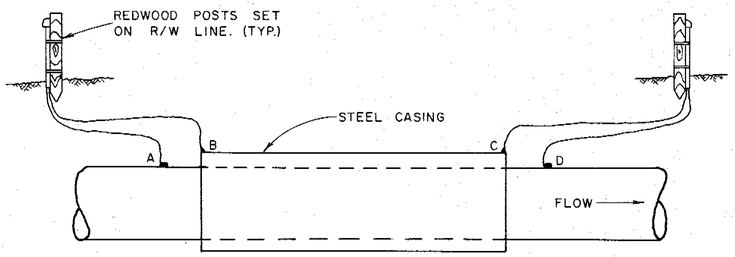

ENCASEMENT STATION

NOTE 1. A AND B - #12 AWG TYPE UF INSULATION TEST LEAD WIRE STRANDED COPPER.
2. C AND D - #8 AWG UF WIRE STRANDED COPPER
3. ENCASEMENT LEADS - YELLOW.

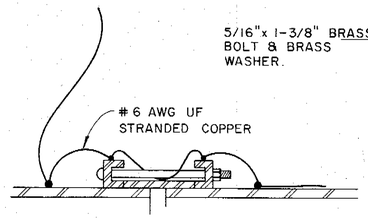

COUPLING BOND

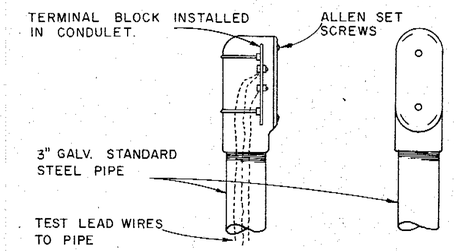

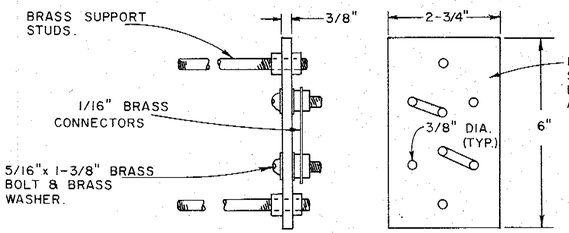

DETAIL A

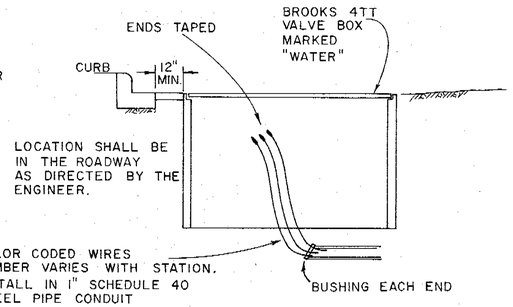

STREET INSTALLATION

NOTE: TEST STATION UNIT SHALL BE INSTALLED COMPLETE WITH MICARTA TERMINAL BLOCK, BRASS HARDWARE, CONDULET, COVER & RUBBER GASKET.

NOTES:

1. COLOR CODE:

AQUEDUCT PIPELINE
WHITE - DOWNSTREAM
YELLOW - MIDPOINT
BLACK - UPSTREAM

FOREIGN PIPELINE CROSSINGS
BLUE - GAS
GREEN - WATER
RED - SEWER PRESSURE MAIN
ORANGE - UNIDENTIFIED PIPELINE

TERMINAL POST WASHERS
SHALL BE PAINTED SAME COLOR AS LEAD WIRES.

2. LEAD WIRES
LENGTH AND SIZE OF EACH WIRE SHALL BE MEASURED AND STAMPED ON A METAL TAG AFFIXED TO THE WIRE TERMINAL POST. WHERE UF WIRE IS NOT AVAILABLE IN COLORS, COLOR CODE SHALL BE INDICATED BY COLOR TAPE AT TERMINALS.

~~3. WHEN CLEARANCE BETWEEN FOREIGN PIPELINE IS LESS THAN 12", INSERT SQUARE SHEET OF LAMINATED PHENOLIC PLASTIC 1/4" THICK WITH LENGTHS EQUAL TO THE O.D. OF THE LARGER PIPE OR 18" WHICH EVER IS LARGER. INSTALL 32 LB. MAGNESIUM ANODE EACH SIDE OF AGENCY PIPELINE PER STREET INSTALLATION DETAIL.~~

4. NO TEST LEAD CONNECTIONS SHALL BE MADE TO METALLIC FOREIGN PIPELINES DRAPE 3' OF EXTRA CABLE AT POINT OF CROSSING FOR CONNECTION BY OTHERS.

5. GALVANIC ANODE TYPE-A TO BE INSTALLED AT 2,000' INTERVALS.

Return to Index

No.	DATE	REVISION	By
		AS BUILT Date MAY 1 1977	

RUSSIAN RIVER COTATI INTERTIE PROJECT
GALVANIC ANODES AND ELECTROLYSIS TEST STATIONS

SCALE: NONE | APPROVED CHIEF ENGINEER | DRAWN
DATE: JULY 1, 1975 | | CHECKED

SONOMA COUNTY WATER AGENCY

DESIGNED | SUBMITTED | DRAWING NUMBER
WA-1

MICROFILMED

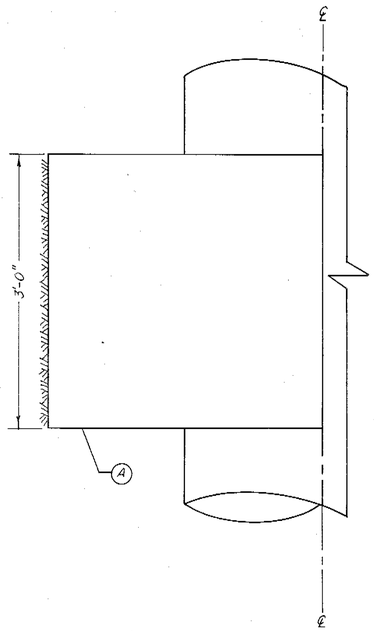

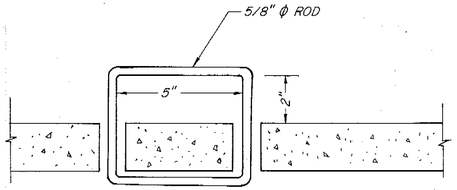

HANDLE DETAIL

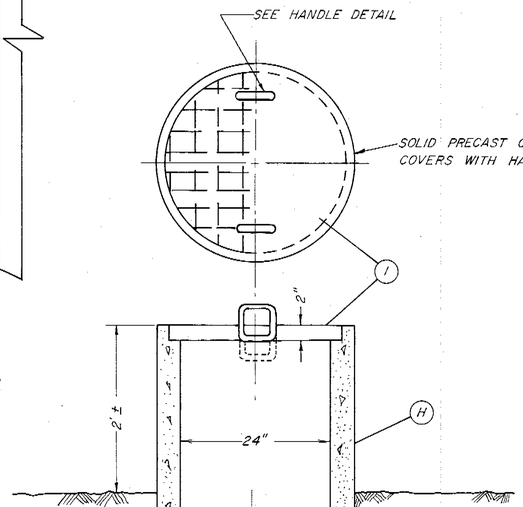

CAST IRON COVER

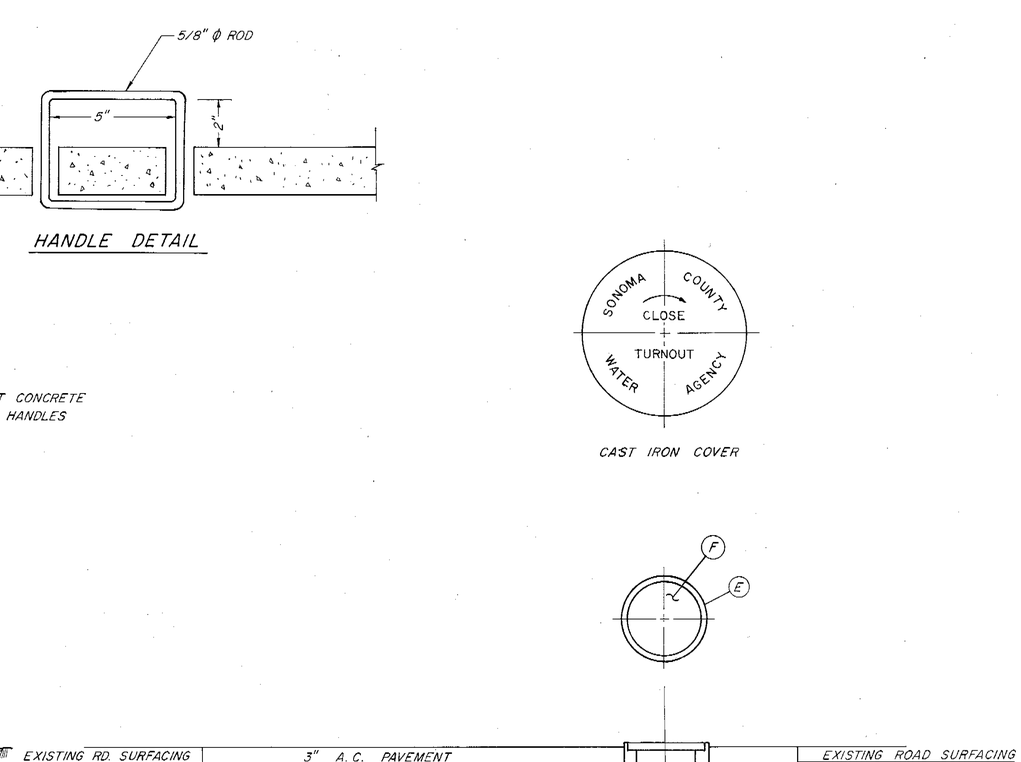

TURNOUT TYPE B

IN ROADWAYS

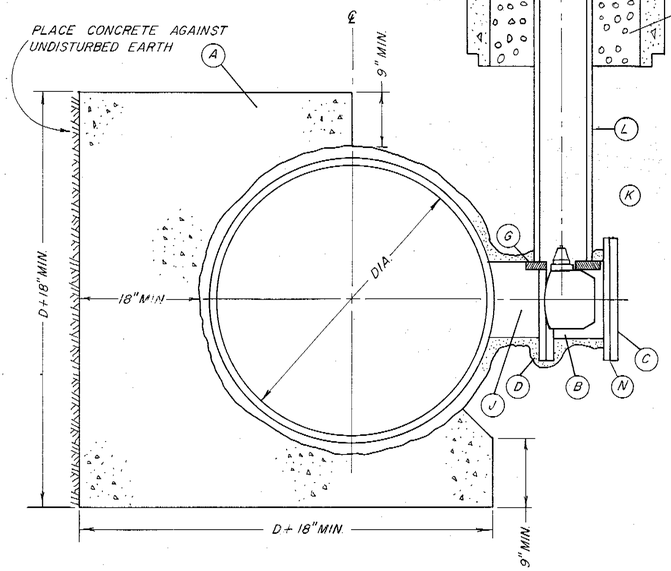

TURNOUT TYPE A

IN AGENCY RIGHT OF WAY

DISCRIPTIONS

A	CONCRETE THRUST BLOCK- CLASS 4B2000 – PLAIN CONCRETE
B	BUTTERFLY VALVE W/ OPERATOR, FLANGED, RUBBER SEAT, SHORT BODY.
C	BLIND FLANGE, PAINT FLANGE AND BOLTS AFTER INSTALLATION WITH COAL TAR EPOXY.
D	PAINT SURFACE WITH BITUMASTIC NO. 50, WRAP WITH 18 GAUGE STUCCO NETTING AND PLASTER WITH 1:3 MIX 1 1/2" THICK.
E	TRAFFIC VALVE BOX W/ CAST IRON COVER BROOKS 3RT 8" ACP OR 12" BROOKS EXTENSIONS, BROOKS PRODUCTS INC. OR APPROVED EQUAL.
F	CAST IRON COVER BROOKS 3RT WITH PRINTING AS SHOWN.
G	DOUBLE 2"X6"X12" REDWOOD BLOCKING NOTCHED TO RECEIVE VALVE STEM. PRECAST CONCRETE BASE 12"X12"X1 1/2" MAY BE SUBSTITUTED.
H	CONCRETE IRRIGATION PIPE 24"X4'0" GROOVE END UP FOR LID.
I	CONCRETE PRECAST LID WITH TWO HANDLES 5/8" Ø REINFORCED WITH 6"X6"X10GA. MESH WITH 1/4" Ø ROD AROUND LID EDGE. PRINTING AS SHOWN
J	TURNOUT TEE TO BE FABRICATED BY PIPE MANUFACTURER. LOCATE 8" MIN. FROM RUBBER GASKET JOINT. COATING SAME AS PIPELINE COATING.
K	SAND BACKFILL TO 12" OVER TOP OF VALVE. CONTINUE BACKFILL AND COMPACTION AS REQUIRED FOR LOCATION
L	8" ACP OR 12" BROOKS EXTENSIONS OR APPROVED EQUAL.
M	CONCRETE PAD CLASS 4B 2000
N	2-POINT TEST STATION REQUIRED WITH INSULATION GASKET. NOT REQUIRED FOR BLIND FLANGE INSTALLATIONS.

NOTES:

1. PRESSURE RATINGS OF EQUIPMENT SHOWN SHALL BE NO LESS THAN THE WORKING PRESSURE (IN FEET OF HEAD) INDICATED ON THE PROFILE DRAWINGS.

Return to Index

No.	Date	REVISION	By
		AS BUILT Date By:	

RUSSIAN RIVER – COTATI INTERTIE PROJECT

DISTRIBUTION TURNOUTS TYPE A AND TYPE B

SCALE: NONE | APPROVED CHIEF ENGINEER | DRAWN

DATE: JULY 1, 1975 | Gordon W. Mills R.E. 8271 | CHECKED

SONOMA COUNTY WATER AGENCY

DESIGNED R.E. Schuler | SUBMITTED | DRAWING NUMBER WA-2

PRINT

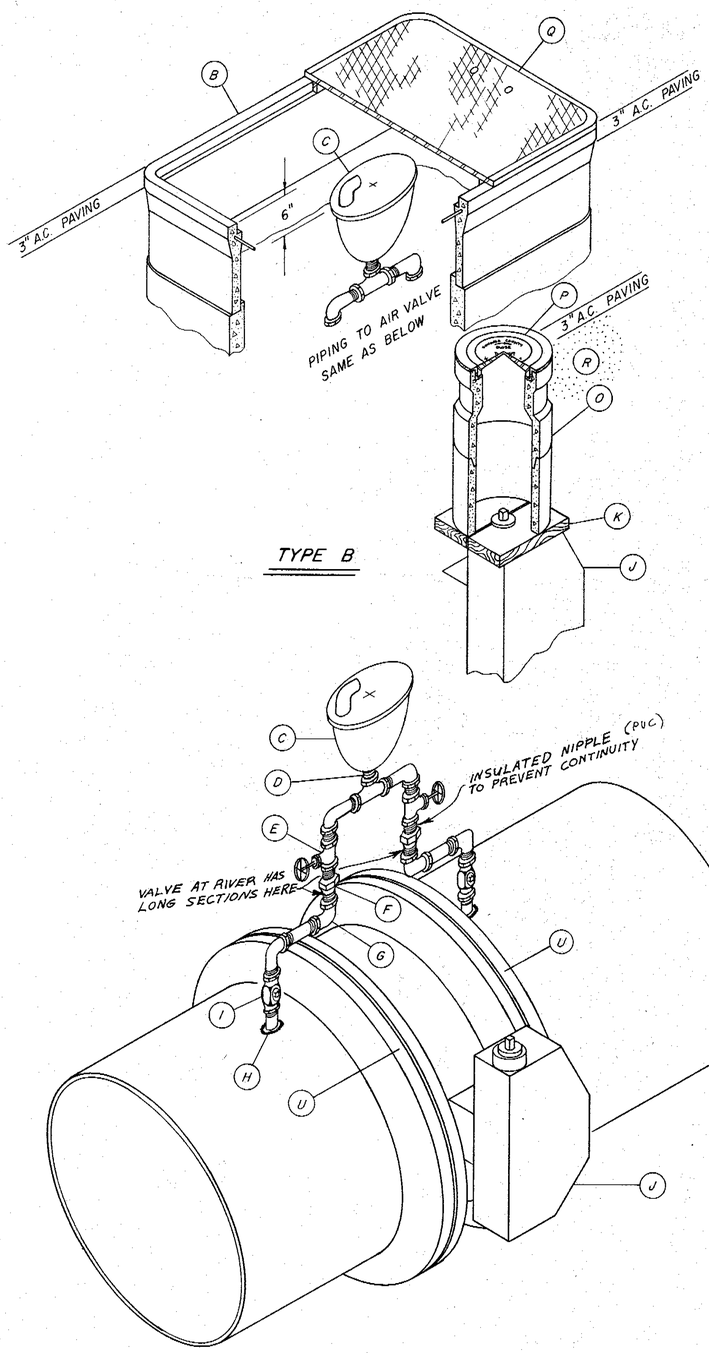

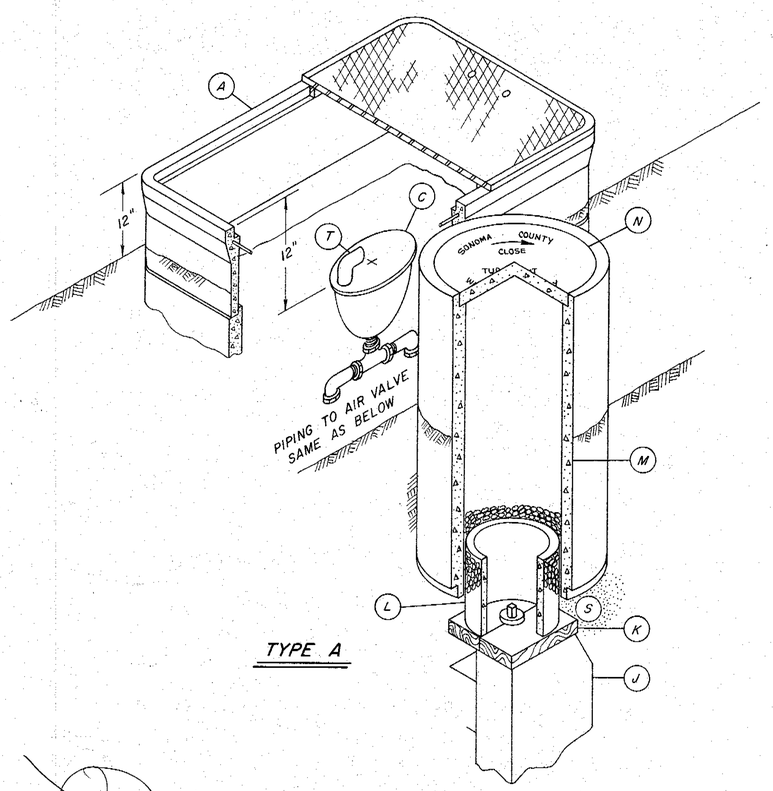

A	METER BOX SERIES 68 BROOKS OR A.E., STACKED WITH NON-TRAFFIC LID WITH SIX 3/4" VENT HOLES EQUALLY SPACED. USE REDWOOD OR CONCRETE SUPPORT BLOCKS (2-2"x6"x 24")
B	METER BOX SERIES 68 BROOKS OR A.E., STACKED WITH TRAFFIC LID. USE REDWOOD OR CONCRETE SUPPORT BLOCKS (2-2"x6"x 24")
C	2" AIR VALVE
D	2" CLOSE NIPPLE
E	2"BRONZE GATE VALVE CRANE NO. 472 OR A.E.
F	2" UNION COUPLING
G	2" GALVANIZED ELBOW
H	2" THREDOLET BY PIPE MANUFACTURER
I	2" CORPORATION STOP, BRONZE BODY CRANE NO.320 OR A.E.
J	MAIN LINE BUTTERFLY VALVE WITH OPERATOR, FLANGED, RUBBER SEAT, SHORT BODY.
K	DOUBLE 2"x 6"x 12" REDWOOD BLOCKING NOTCHED TO RECEIVE VALVE STEM. PRECAST CONCRETE PADS 12"x 12"x 1 1/2", MAY BE SUBSTITUTED.
L	8" ACP OR 12" BROOKS EXTENSIONS OR A.E.
M	CONCRETE IRRIGATION PIPE 24"x4'-0" GROOVE END UP FOR LID.
N	CONCRETE PRECAST LID OF ASBESTOS CEMENT WITH 2 HANDLES 5/8" ϕ REINFORCED WITH 6"x 6"x 10 Ga. MESH WITH 1/4" ϕ ROD AROUND LID EDGE
O	TRAFFIC VALVE BOX WITH CAST IRON COVER BROOKS 3 RT 8" ACP OR 12" BROOKS EXTENSIONS, BROOKS PRODUCTS INC. OR A.E.
P	CAST IRON COVER BROOKS 3 RT WITH PRINTING AS SHOWN.
Q	TRAFFIC LID WITH SIX 3/4" DIA. HOLES EQUALLY SPACED.
R	SAND BACKFILL TO MEET SPECIFICATIONS
S	SAND BACKFILL TO 12" OVER TOP OF VALVE. CONTINUE BACKFILL AND COMPACTION AS REQUIRED FOR LOCATION.
T	2" 90° GALVANIZED ELBOW
U	2-POINT TEST STATION PER DWG. WA-1

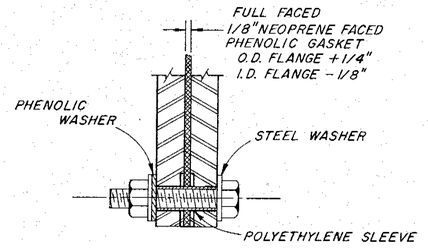

DETAIL
INSULATED FLANGE JOINT
INSTALL AT ONE FLANGE ONLY
(INSTALL INSULATED GASKET SET ONLY WHEN CALLED FOR ON PLAN & PROFILE)

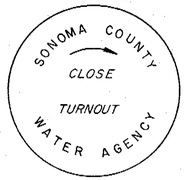

DETAIL FOR WORDING OF CONCRETE & IRON LIDS
NOTE: The Contractor gave us the mold for the concrete lids.

NOTES

1. PRESSURE RATINGS OF EQUIPMENT SHOWN SHALL BE NO LESS THAN THE WORKING PRESSURE (IN FEET OF HEAD) INDICATED ON THE PROFILE DRAWINGS.
2. ALL 2" PIPING & FITTINGS SHALL BE GALVANIZED, SCHEDULE 80, UNLESS OTHERWISE SHOWN.

Return to Index

No.	DATE	REVISION	By
		AS BUILT Date MAY 2 1977 D.R. Allen	

RUSSIAN RIVER - COTATI INTERTIE PROJECT
MAIN LINE VALVE TYPE A & B

SCALE: NO SCALE	APPROVED CHIEF ENGINEER	DRAWN	sfm
DATE: JULY 1, 1975	RE 8271	CHECKED	
SONOMA COUNTY WATER AGENCY			
DESIGNED R.E. Schuler	SUBMITTED	DRAWING NUMBER	WA-3

SHEET NO. 29

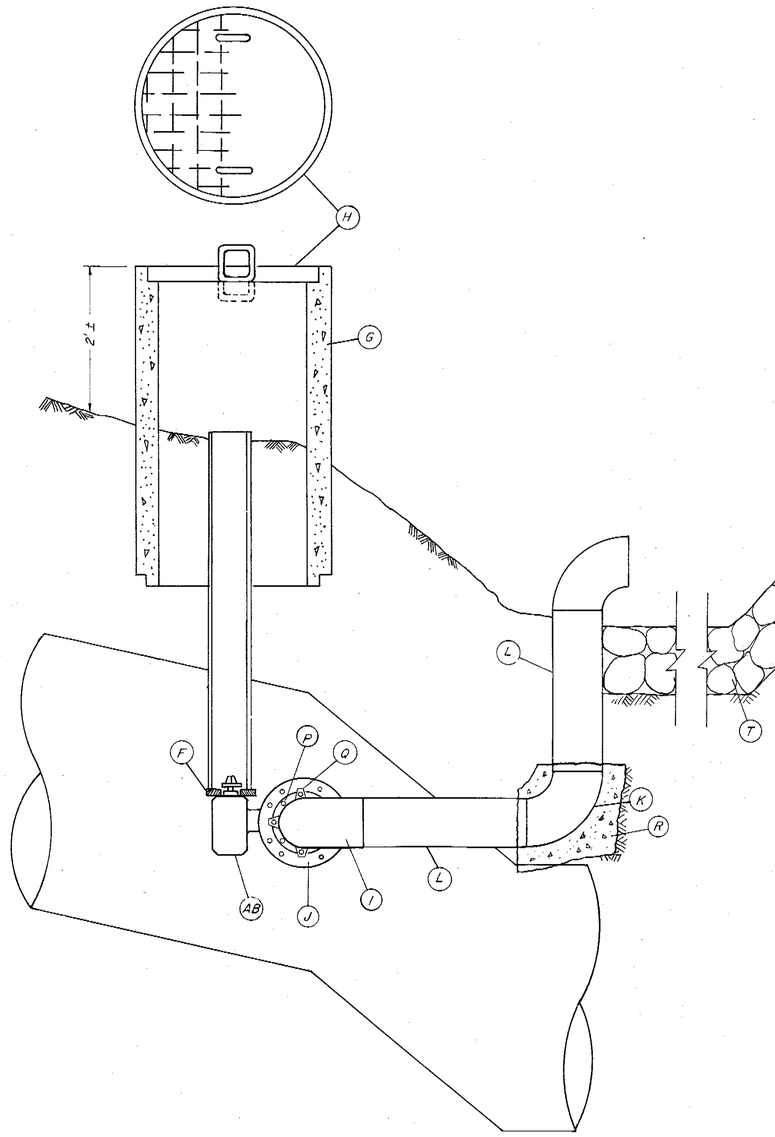

BLOWOFF TYPE A

IN AGENCY RIGHT OF WAY

SONOMA COUNTY WATER AGENCY
CLOSE
TURNOUT

COVERS FOR (E) & (H)

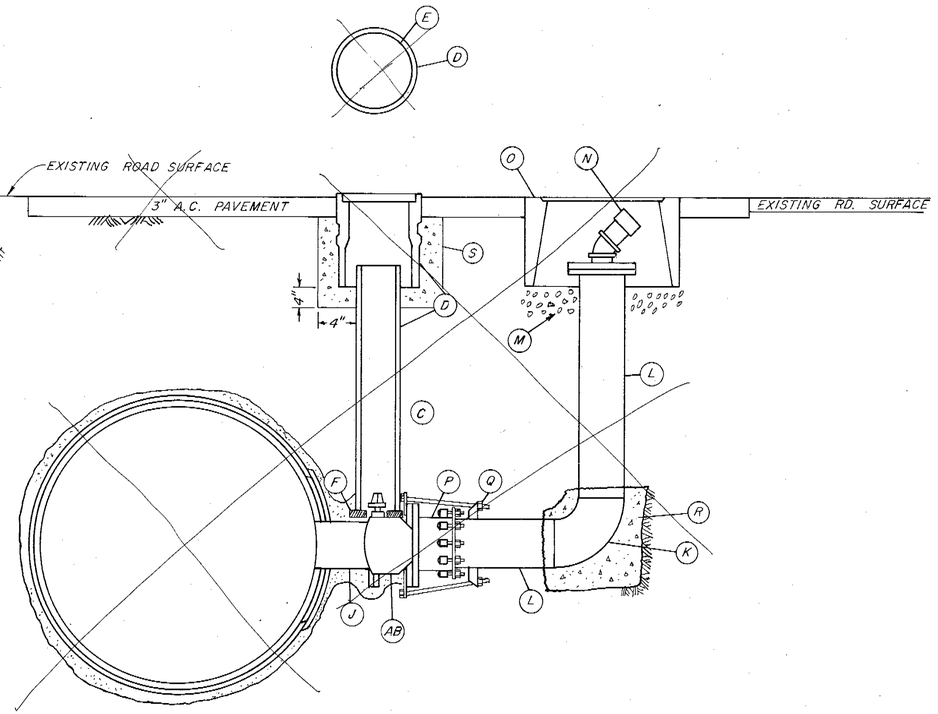

BLOWOFF TYPE B

IN ROADWAYS

	DISCRIPTION
A	BUTTERFLY VALVE W/ OPERATOR CLASS 150 MIN. FLANGED RUBBER SEAT, SHORT BODY.
B	OPERATOR MUST MEET 150% OF NORMAL DESIGN TORQUE REQUIREMENTS
C	SAND BACKFILL
D	TRAFFIC VALVE BOX W/ CAST IRON COVER, USE 12" EXTENSIONS OR 8" ACP CUT TO SIZE. BROOKS 3RT AND EXTENSIONS. BROOKS PRODUCTS INC. OR APPROVED EQUAL.
E	CAST IRON COVER – CASTING TO READ AS SHOWN - 3RT BROOKS PRODUCTS INC.
F	DOUBLE 2"X6"X12" REDWOOD BLOCKING NOTCHED TO RECIEVE VALVE STEM. PRECAST CONCRETE PIERS 12"X12"X1 1/2" MAY BE SUBSTITUTED.
G	CONCRETE IRRIGATION PIPE 24"X 4'0" GROOVE END UP FOR LID.
H	CONCRETE PRECAST LID WITH 2 HANDLES 5/8" / REINFORCED WITH 6"x6"x10Ga. MESH WITH 1/4" / ROD AROUND LID EDGE. CASTING TO READ AS SHOWN.
I	TURNOUT NOZZLE W/ WELDED 90° ELBOW TO BE FABRICATED BY PIPE MANUFACTURER.
J	TURNOUT NOZZLE W/ FLANGE SAME AS MAIN LINE PIPING FABRICATED BY PIPE MANUFACTURER.
K	WELDED 90° ELBOW CLASS EQUAL TO MAIN LINE PRESSURE.
L	STEEL PIPE SCHEDULE 40. LENGTH AS NEEDED.
M	1/2 CU. YD. DRAIN ROCK.
N	2" STD. MALLEABLE IRON CLOSE NIPPLE, 45° ELBOW AND CAP.
O	CONCRETE WATER METER BOX, BROOKS 36 SERIES, W/TRAFFIC COVER.
P	FLANGED COUPLING ADAPTER SMITH BLAIR 913 OR APPROVED EQUAL.
Q	JOINT HARNESS PER AWWA STEEL MANUAL M-11 1964 CHAPTER 19.
R	CONCRETE ANCHOR BLOCK MIN. SIZE 2' x 3' x 3'
S	CONCRETE PAD CLASS 5B 2500
T	LOOSE ROCK RIPRAP 200 SQUARE FT. COVERAGE, 1.5 FT. THICK

NOTES

1. PRESSURE RATINGS OF EQUIPMENT SHOWN SHALL BE NO LESS THAN THE WORKING PRESSURE (IN FEET OF HEAD) INDICATED ON THE PROFILE DRAWINGS

Return to Index

No.	Date	REVISION	By
		David R. Ellis	

RUSSIAN RIVER – COTATI INTERTIE PROJECT

BLOWOFF TYPE A & B

SCALE: NONE | APPROVED CHIEF ENGINEER | DRAWN A.F.

DATE: JULY 1, 1975 | CHECKED J.C.

SONOMA COUNTY WATER AGENCY

DESIGNED R.E. Schuler | SUBMITTED | DRAWING NUMBER WA-4

SHEET NO. 30

PRINT

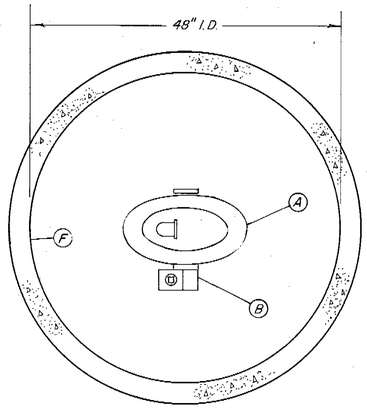

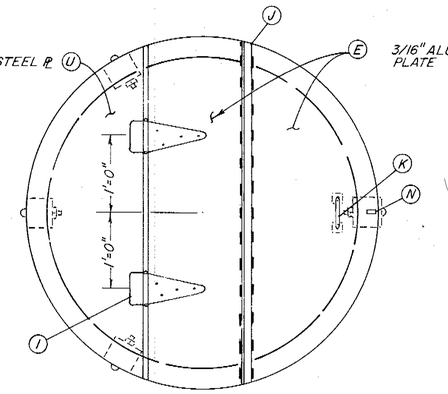

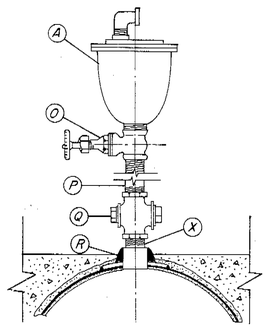

DETAIL A

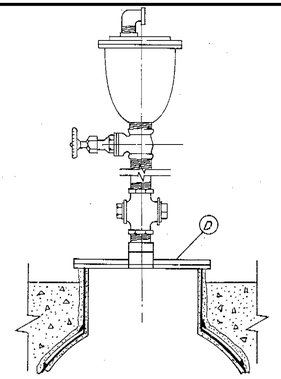

DETAIL B

FOR 2" AIR VALVES

(SAME HOUSING AS 4" REQUIRED)

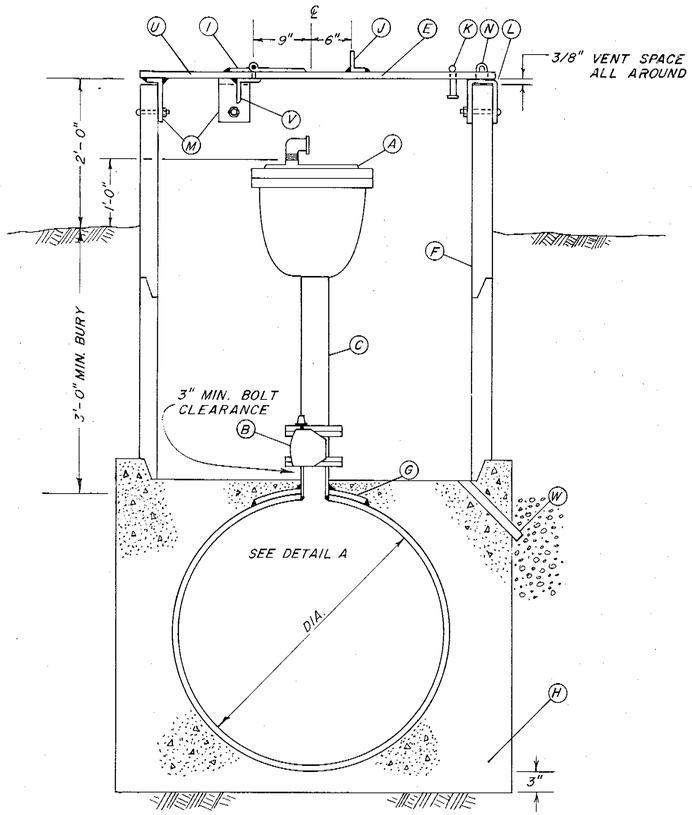

TYPE "A"
AIR VALVE INSTALLATION (4")
WITHOUT MANHOLE
IN AGENCY RIGHT OF WAY

FOR 2" AIR VALVES SEE DETAIL A

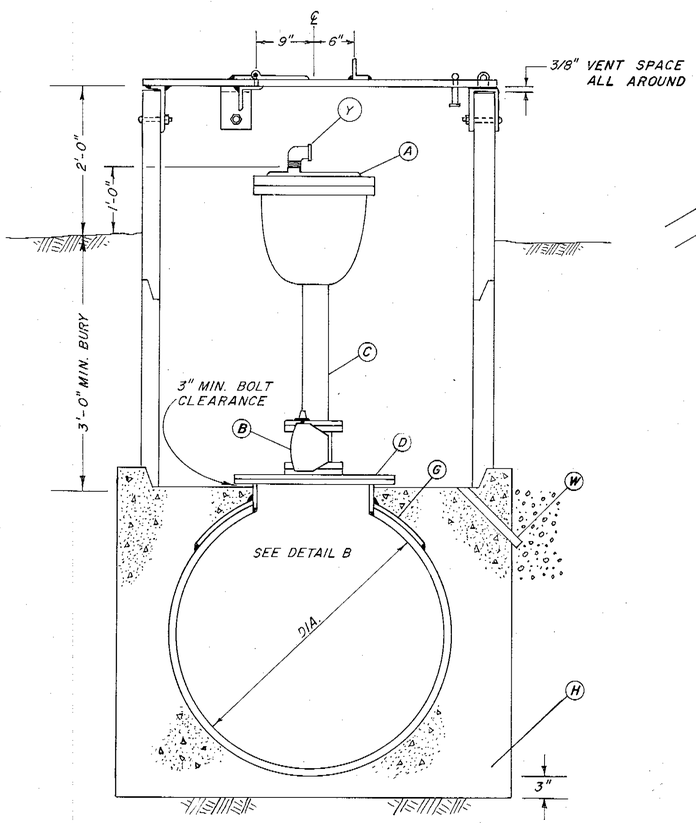

TYPE "B"
AIR VALVE INSTALLATION (4")
WITH MANHOLE
IN AGENCY RIGHT OF WAY

FOR 2" AIR VALVES SEE DETAIL B

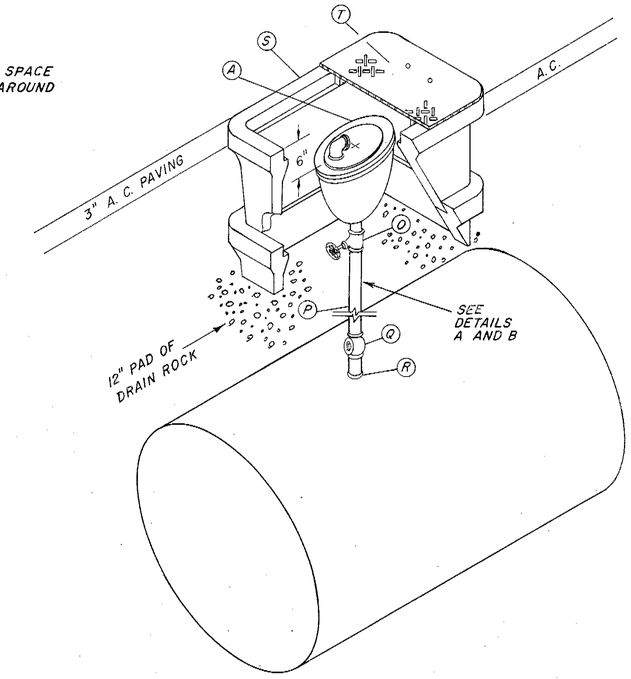

TYPE "C"
AIR VALVE INSTALLATION
FOR ROADWAYS

A	COMBINATION AIR VALVE 2" OR 4" APCO 140 SERIES, OR APPROVED EQUAL.
B	BUTTERFLY VALVE, 4", W/OPERATOR, SHORT BODY, FLANGED, RUBBER SEAT. PRATT — GROUNDHOG B.I.F. MODEL 656, ALLIS-CHALMERS STREAMSEAL OR A.W.W.A. APPROVED OR EQUAL.
C	4" STEEL PIPE WITH S. O. FLANGE
D	18" MANHOLE W/18" S. O. FLANGE & 18" BLIND FLANGE DRILLED & TAPPED FOR 4" OR 2" OUTLET. A.W.W.A. C208 & C207.
E	3/16" ALUM. PLATE FOR PORTION OF COVER.
F	48" I.D. CONCRETE PIPE FOR AIR VALVE INSTALLATION
G	WELD SADDLE PLATE & MANHOLE OR OUTLET SECTION BY PIPE MANUFACTURER. A.W.W.A. C208
H	CLASS 4D2000 CONCRETE 5'X 5'X [D+2(9")]
I	9"X4" HEAVY DUTY HINGE, FILLET-WELD TO STEEL PLATE, BOLT TO ALUM. PLATE
J	2-1/2"X 1-1/2"X 1/4" ALUM. ANGLE, STITCH-WELD 1" ON 4" CENTERS
K	LIFTING HANDLE, 5/8" Ø ROD
L	C 6" LEGS X 3" X 1/4" X 3" STEEL STIRRUP, BOLT TO PIPE WITH 1/2" X 5-1/2" BOLT, ALLOW 3/8" MIN. VENT SPACE BETWEEN COVER & PIPE. WELD HASP STAPLE TO 3" SECTION
M	L 6" X 3" X 3" BRACKET, BOLT AS IN ITEM L-3 REQUIRED
N	CUT 3/8" X 1-3/4" SLOT IN COVER PLATE FOR HASP STAPLE
O	2" BRONZE GATE VALVE, CRANE NO. 488 OR A.E.
P	2" PIPE, SCHEDULE 80
Q	2" BRONZE CORPORATION COCK, CRANE NO. 320
R	2" THREDOLET BY PIPE MANUFACTURER.
S	METER BOX SERIES 38 BROOKS OR APPROVED EQUAL STACKED, WITH TRAFFIC LID. USE REDWOOD OR CONCRETE SUPPORT BLOCKS (2-2"X 6"X 12")
T	TRAFFIC LID SERIES 38 BROOKS. DRILL 6, 3/4"DIA. HOLES EVENLY SPACED
U	3/16"STEEL PLATE FOR PORTION OF COVER
V	L 3"X 3"X 1/4"X 3'-3" STITCH WELD 1" ON 4" CENTERS
W	2" PLASTIC PIPE FLOOR DRAIN WITH 3 CU. FT. OF DRAIN ROCK
X	NIPPLE, SCHEDULE 80
Y	GALVANIZED ELBOW

NOTES

1. PRESSURE RATINGS OF EQUIPMENT SHOWN SHALL BE NO LESS THAN THE WORKING PRESSURE (IN FEET OF HEAD) INDICATED ON THE PROFILE DRAWINGS
2. ALL PIPING, 4" AND SMALLER, SHALL BE GALVANIZED UNLESS OTHERWISE NOTED

No.	Date	REVISION	By

RUSSIAN RIVER — COTATI INTERTIE PROJECT

AIR VALVE INSTALLATION
TYPE A, B & C

SCALE: NONE | APPROVED CHIEF ENGINEER | DRAWN RM

DATE: JULY 1, 1975 | CHECKED

SONOMA COUNTY
WATER AGENCY

DESIGNED | SUBMITTED | DRAWING NUMBER

WA-5

SHEET NO. 31

Return to Index

PRINT

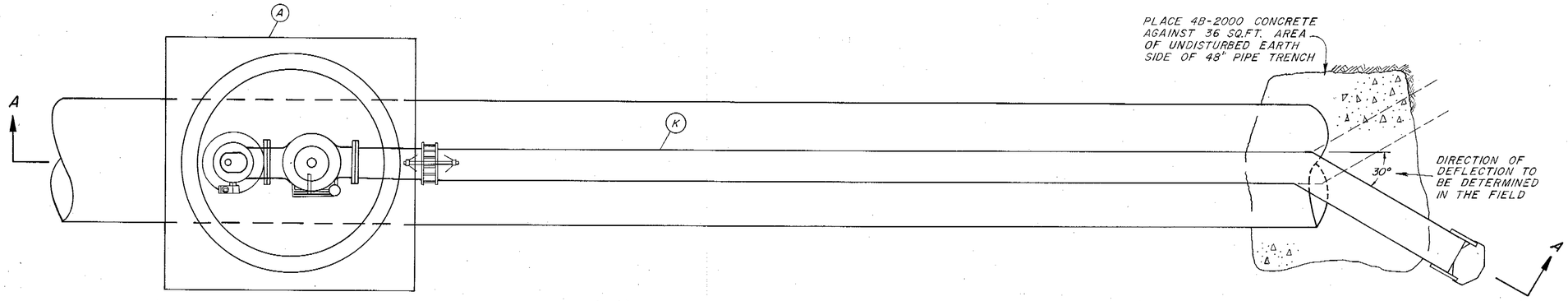

PLAN
SCALE: 1" = 2'

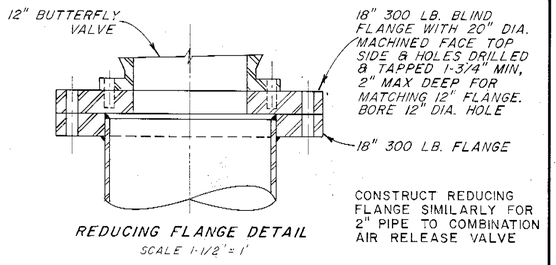

REDUCING FLANGE DETAIL
SCALE 1-1/2" = 1'

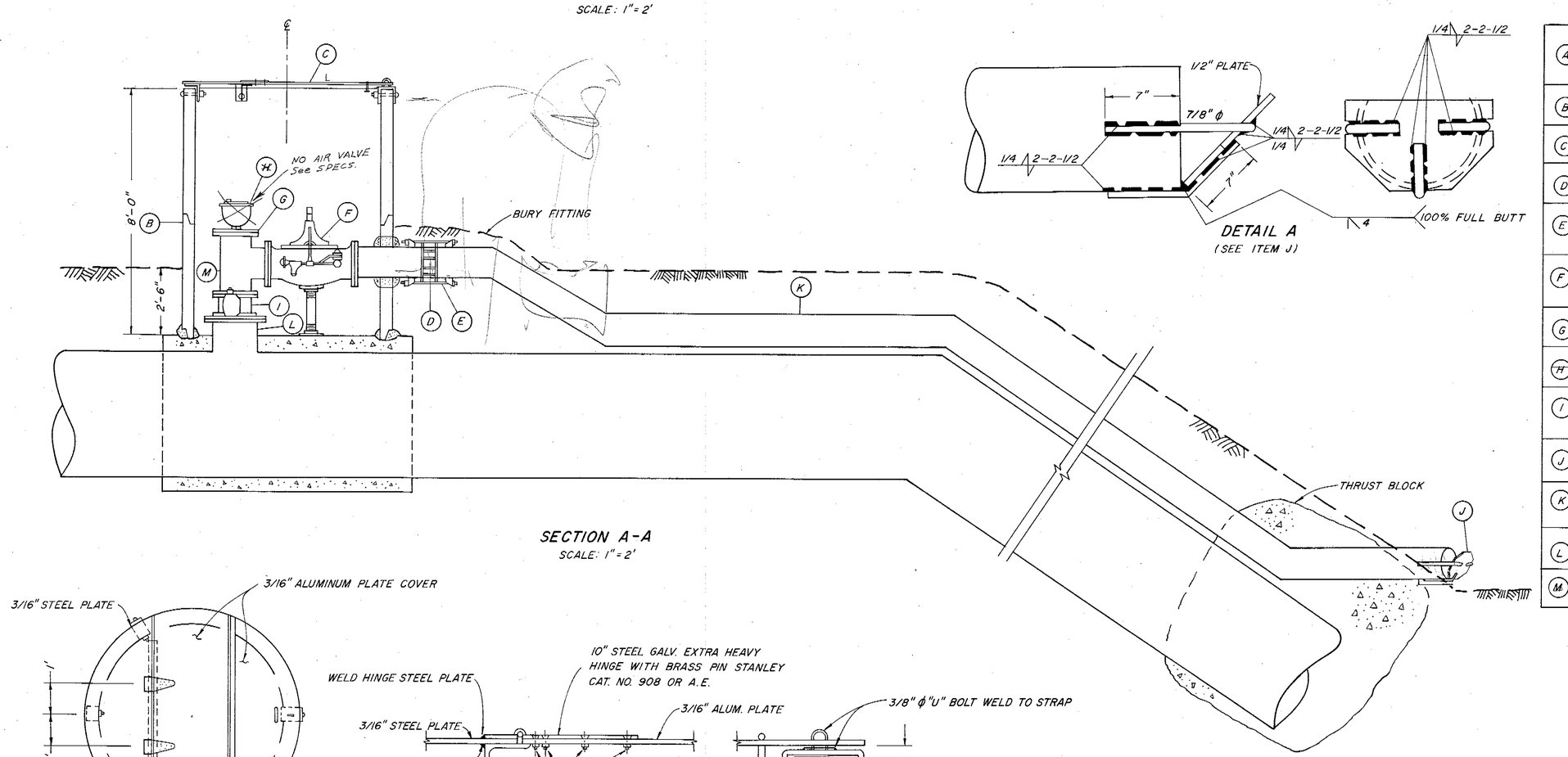

SECTION A-A
SCALE: 1" = 2'

DETAIL A
(SEE ITEM J)

A	8'x8'x 4.5' CONCRETE OUTLET BASE FOR CONCRETE PIPE INSTALL 4B 2000 CONCRETE SEE STANDARD SPEC. SECTION 201-1
B	72" DIAMETER REINFORCED CONCRETE PIPE SECTIONS
C	ALUMINUM HINGED LID WITH HASP.
D	12" COUPLING DRESSER OR SMITH BLAIR A.E.
E	BOLTED JOINT HARNESS PER. AWWA M-11 (STEEL PIPE MANUAL).
F	PRESSURE RELIEF VALVE — NON-SLAMMING BAILEY NO. 428 OR A.E.
G	12" 300 LB. BLIND FLANGE TAPPED FOR 2" OUTLET.
~~H~~	~~2" COMBINATION AIR RELEASE VALVE APCO 145-C OR A.E.~~
I	12" BUTTERFLY VALVE WITH OPERATOR - SHORT BODY, FOR NON-EMBEDDED SERVICE
J	DIFFUSER PLATE 1/2" ON 45° ANGLE WITH WELDED BRACES 7/8" ϕ
K	12" WELDED STEEL PIPE, ASTM A53, GR B, LENGTH AS SPECIFIED. CEMENT MORTAR LINED & COATED NOT LESS THAN 3/8" WALL THICKNESS
L	18" MANHOLE WITH 18" 300LB. BLIND FLANGE MACHINED TO MATCH 150 LB. FLANGE OF BUTTERFLY VALVE
M	12" FLANGED STEEL TEE

NOTES
1. PRESSURE RATINGS OF EQUIPMENT SHALL BE OF NO LESS THAN THE WORKING PRESSURE (IN FEET OF HEAD) INDICATED ON THE PROFILE DRAWINGS

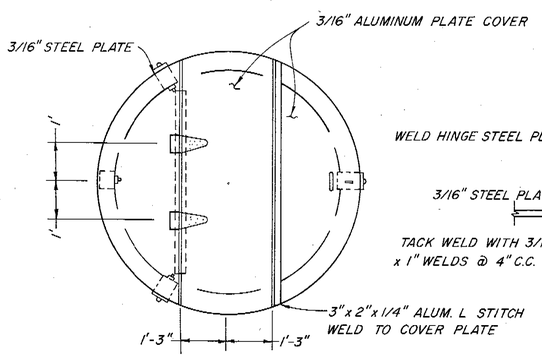

LID DETAIL
SCALE 1/2" = 1'

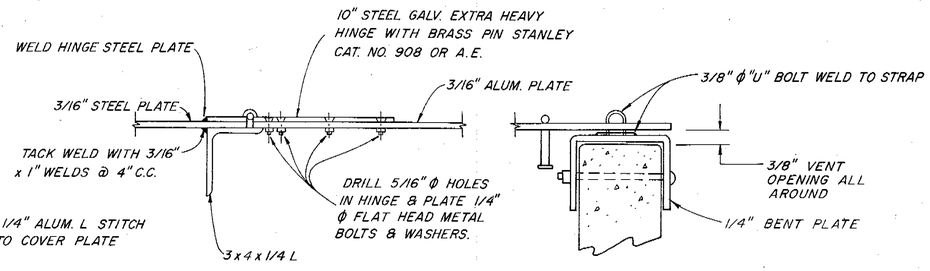

HINGE & HASP DETAILS
NOT TO SCALE

Return to Index

No.	DATE	REVISION	By
		AS BUILT Date By: David R. Stein	

RUSSIAN RIVER – COTATI INTERTIE PROJECT
PRESSURE RELIEF VALVE INSTALLATION

SCALE: AS SHOWN
DATE: JULY 1, 1975
APPROVED CHIEF ENGINEER: Gordon W. Miller RE 8271
DRAWN
CHECKED
SONOMA COUNTY WATER AGENCY
DESIGNED: Rod E. Schuler
SUBMITTED
DRAWING NUMBER: WA-6

(ALL PAVED ROADS)

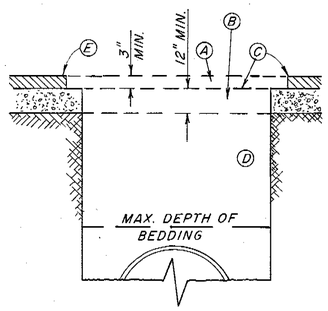

CLASS "A" BACKFILL AND TRENCH SURFACING

- (A) REPLACE EXISTING SURFACE WITH ASPHALTIC CONCRETE CONFORMING WITH SECTION 302-5 STD. SPECS.
- (B) CLASS 2 AGGREGATE BASE CONFORMING WITH SECTION 200-2 STD. SPECS.
- (C) RS-1 EMULSIFIED ASPHALT
- (D) STRUCTURE BACKFILL MATERIAL COMPACTED TO 95% WITHIN 3' OF FINISHED GRADE, 90% BELOW.
- (E) ROADWAY PAVEMENT TO BE SAW-CUT & REMOVED FOR 6" EACH SIDE OF TRENCH.

(DIRT ROADS)

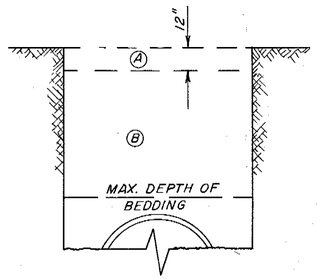

CLASS "B" BACKFILL AND TRENCH SURFACING

- (A) EXCAVATED OR IMPORTED MATERIAL COMPACTED IN 6-INCH LIFTS TO 85%. NO ROCKS LARGER THAN 4" IN DIAMETER SHALL BE INCLUDED IN THIS MATERIAL.
- (B) LOCAL OR IMPORTED MATERIAL COMPACTED OR CONSOLIDATED TO 80%

(GRAVEL ROADS) OR (SHALE ROADS)

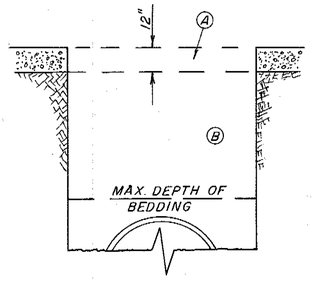

CLASS "C" BACKFILL AND TRENCH SURFACING

- (A) REPLACE EXISTING ROADWAY SURFACE WITH UNTREATED ROCK BASE CONFORMING WITH SECTION 301-2 STD. SPECS. COMPACTED TO 90%
- (B) LOCAL OR IMPORTED MATERIAL COMPACTED OR CONSOLIDATED TO 85%

(DRY PASTURE)

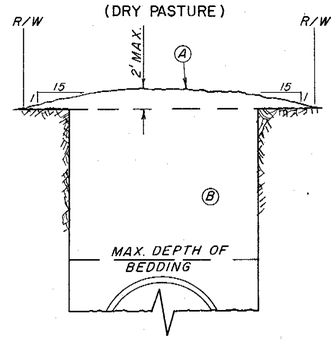

CLASS "D" BACKFILL

- (A) EXCESS SPOIL TO BE MOUNDED WITHIN R/W AS SHOWN EXCEPT AT LOCATIONS OF CROSS DRAINS OR SWALES; AT THESE LOCATIONS A "V" NOTCH WITH 6:1 SIDE SLOPES SHALL BE CONSTRUCTED.
- (B) EXCAVATED OR IMPORTED MATERIAL COMPACTED OR CONSOLIDATED TO 76%

(IRRIGATED, CULTIVATED) (OR CROP LAND)

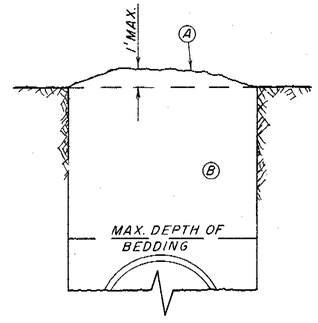

CLASS "E" BACKFILL

- (A) EXCESS SPOIL TO BE MOUNDED EVENLY OVER TRENCH EXCEPT AT CROSS SWALES.
- (B) EXCAVATED OR IMPORTED MATERIAL COMPACTED OR CONSOLIDATED TO 76%

— GENERAL NOTES —

1. CLASS "A" BACKFILL AND TRENCH SURFACING SHALL BE REQUIRED ON ALL PAVED ROADS AND STREETS & WHERE SPECIFIED IN THE SPECIAL PROVISIONS.
2. CLASS "B" BACKFILL AND TRENCH SURFACING SHALL BE REQUIRED ON DIRT ROADS & TRAVELED WAYS & WHERE SPECIFIED IN THE SPECIAL PROVISIONS.
3. CLASS "C" BACKFILL AND TRENCH SURFACING SHALL BE REQUIRED ON GRAVEL OR SHALE ROADS & WHERE SPECIFIED IN THE SPECIAL PROVISIONS.
4. CLASSES "D" & "E" BACKFILL SHALL BE REQUIRED IN THE AGENCY RIGHT-OF-WAY UNLESS OTHERWISE INDICATED ON THE PLAN AND PROFILE.
5. NO ROCK LARGER THAN 1" SHALL BE PLACED WITHIN 6" OF THE PIPE.
6. CONCRETE COATED PIPE IN WET TRENCH CONDITIONS SHALL BE BEDDED IN 3/4" MINUS DRAIN ROCK IN LIEU OF 3" SAND BEDDING OR EXCAVATED SELECT MATERIAL.
7. A MINIMUM OF 3'-0" COVER OVER THE TOP OF THE PIPE SHALL BE MAINTAINED UNLESS OTHERWISE SPECIFIED OR SHOWN.
8. ~~THE CONTRACTOR SHALL BE REQUIRED TO BACKFILL A SUFFICIENT DEPTH OVER THE TOP OF THE PIPE TO PREVENT FLOATING IN THE EVENT THE TRENCH BECOMES FLOODED.~~ DELETED
9. THE THICKNESS OF ASPHALTIC CONCRETE AND UNTREATED ROCK BASE SHOWN FOR CLASS "A" BACKFILL AND TRENCH SURFACING ARE THE MINIMUM THICKNESS PERMITTED. WHERE THE EXISTING PAVEMENT AND/OR ROCK BASE IS THICKER THAN THE MINIMUM IT SHALL BE REPLACED TO THE EXISTING THICKNESS.
10. ~~ON STEEP SLOPES (30% OR MORE) AT EVERY 100' PROVIDE A FULL DEPTH PLUG OF NATIVE MATERIAL APPROXIMATELY 5' THICK TO PREVENT PIPING OF BEDDING AND BACKFILL MATERIAL. PLUG SHALL INCLUDE BEDDING AND BACKFILL COMPACTED TO A RELATIVE COMPACTION OF 85%.~~ DELETED
11. THE CLASS OF BEDDING AND BACKFILL DESIGNATED ON THE PLAN AND PROFILE DRAWINGS WILL BE BY SYMBOL CONSISTING OF A LOWER CASE LETTER FOR THE CLASS OF BEDDING, FOLLOWED BY A SLASH, THEN FOLLOWED BY AN UPPER CASE LETTER FOR THE CLASS OF BACKFILL.
    Example: e/B = CLASS "e" BEDDING AND CLASS "B" BACKFILL.

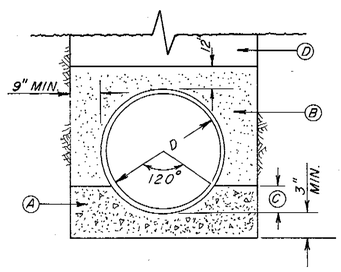

CLASS "a" BEDDING

- (A) CONCRETE, CLASS 4-B-1000.
- (B) BEDDING CONFORMING WITH SECTION 306 STANDARD SPECS COMPACTED TO 80%.
- (C) 1/4 D MINIMUM.
- (D) BACKFILL AS INDICATED FOR LOCATION UNDER GENERAL NOTES.

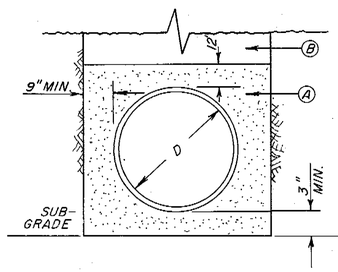

CLASS "b" BEDDING

- (A) BEDDING CONFORMING WITH THE SPECIAL PROVISION (SAND EQUIVALENT OF 30 OR BETTER) COMPACTED TO 90%.
- (B) BACKFILL AS INDICATED FOR LOCATION UNDER GENERAL NOTES.

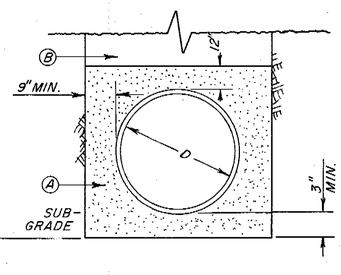

CLASS "c" BEDDING

- (A) EXCAVATED OR IMPORTED MATERIAL PER SPECIAL PROVISIONS COMPACTED TO 85%
- (B) BACKFILL AS INDICATED FOR LOCATION UNDER GENERAL NOTES.

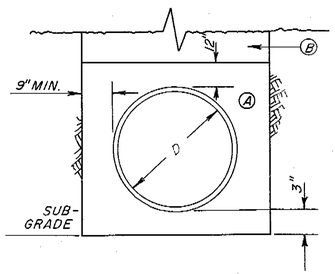

CLASS "d" BEDDING

- (A) EXCAVATED OR IMPORTED MATERIAL PER SPECIAL PROVISIONS COMPACTED TO 80%
- B BACKFILL AS INDICATED FOR LOCATION UNDER GENERAL NOTES.

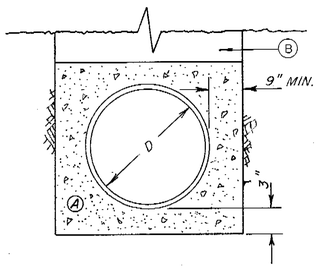

CLASS "e" BEDDING

- (A) CONCRETE, CLASS 5-B-2000 MIN., CONFORMING WITH THE SPECS.
- (B) BACKFILL AS INDICATED FOR LOCATION UNDER GENERAL NOTES.

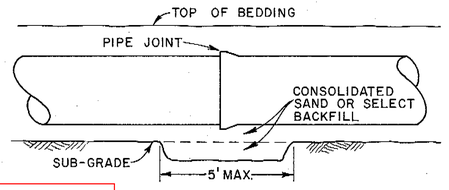

BELL HOLE DETAIL

Return to Index

No.	DATE	REVISION	By
		AS BUILT	

RUSSIAN RIVER-COTATI INTERTIE PROJECT

PIPE BEDDING, BACKFILL AND TRENCH SURFACING

SCALE: NONE | APPROVED CHIEF ENGINEER | DRAWN SKMc

DATE: JUNE 30, 1975 | RE 8271 | CHECKED

SONOMA COUNTY WATER AGENCY

DESIGNED R.E. Schuler | SUBMITTED | DRAWING NUMBER WA-7

SHEET NO. 33

STEEL SIGN AND POST

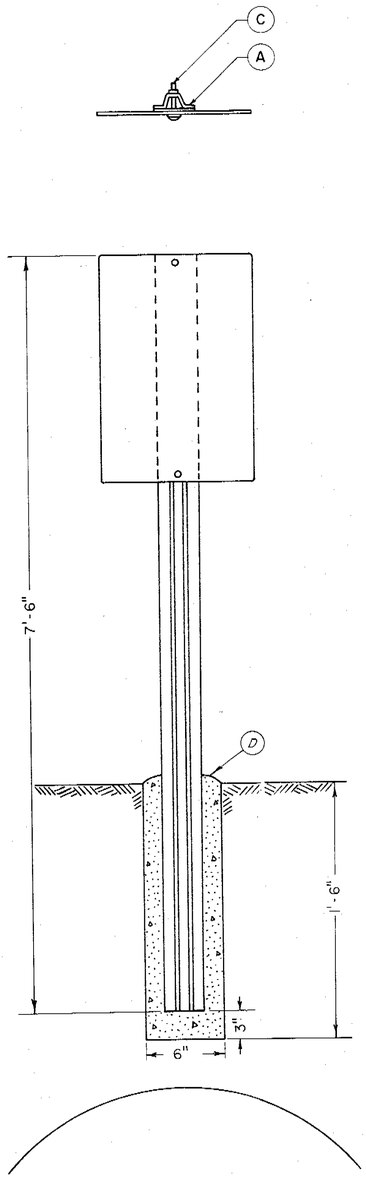

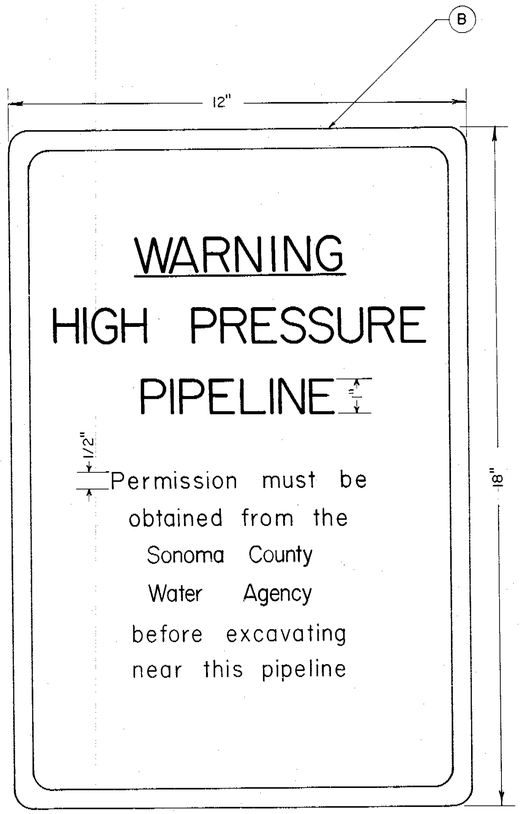

Post placed after backfill and consolidation

D	4-B-2000 concrete footing
C	Two bolts 5/16" x 2 1/4", two 5/16" nuts, two fibre washers, two 1 1/2" x 3" x 1/8" plates
B	Perma sign reflective — 12" x 18", Red on White - Bowman Industries Inc. or A.E.
A	7 1/2' Post — overall width 3 1/16", back thickness 1/8" side thickness .1172", overall depth 1 7/16", flange thickness 1/8", weight 2 lbs. per ft.

No.	DATE	REVISION	By

HIGH PRESSURE PIPELINE
WARNING SIGN

SCALE: NONE | APPROVED CHIEF ENGINEER Hyde W Smith RE 8271 | DRAWN SKMc
DATE: JULY 1, 1975 | CHECKED DA

SONOMA COUNTY
WATER AGENCY

DESIGNED R.E. Schuler | SUBMITTED | DRAWING NUMBER WA-8

Return to Index

SONOMA COUNTY WATER AGENCY

RUSSIAN RIVER-COTATI INTERTIE PROJECT

PIPELINE CONTRACT NO. 2

HALL ROAD TO COTATI RESERVOIR

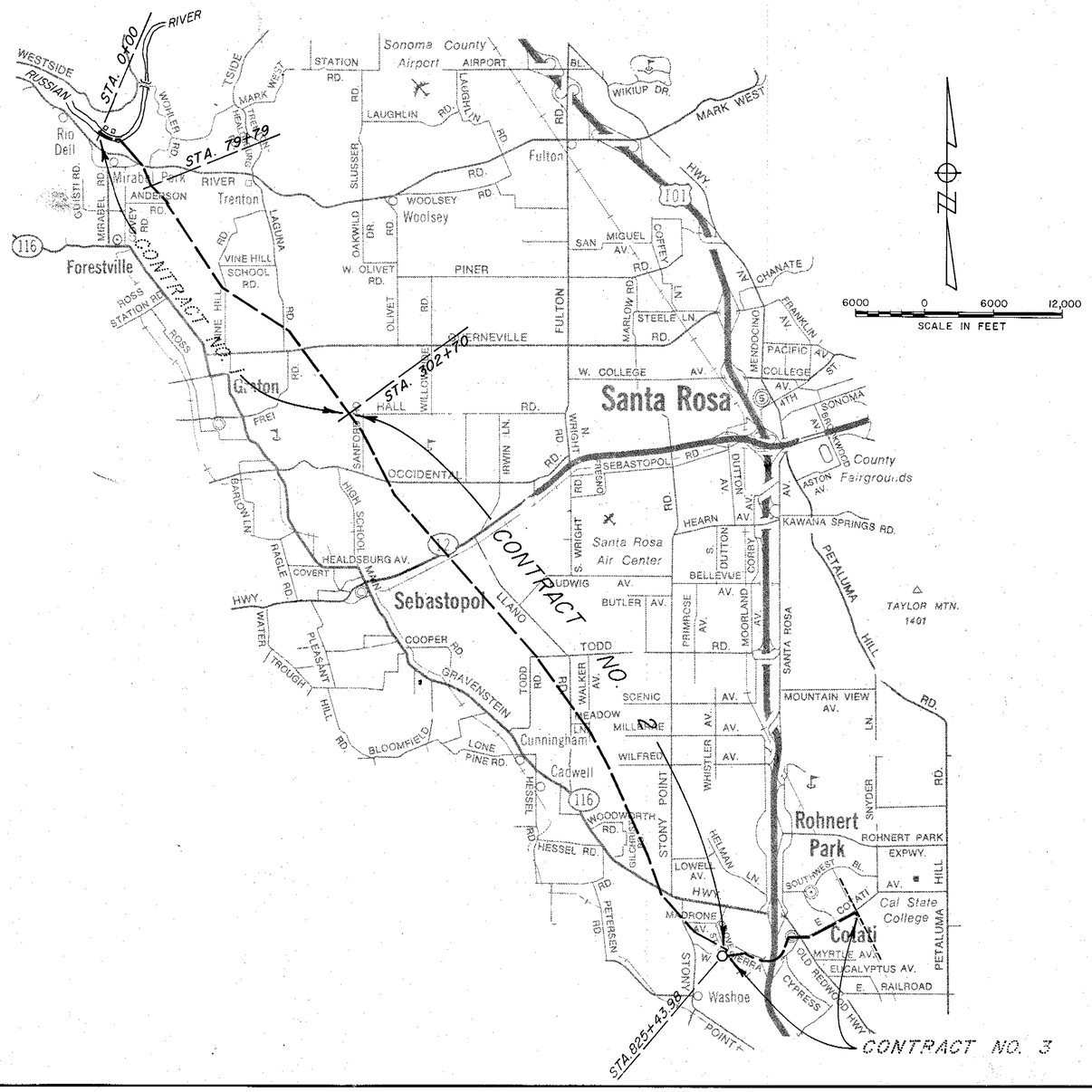

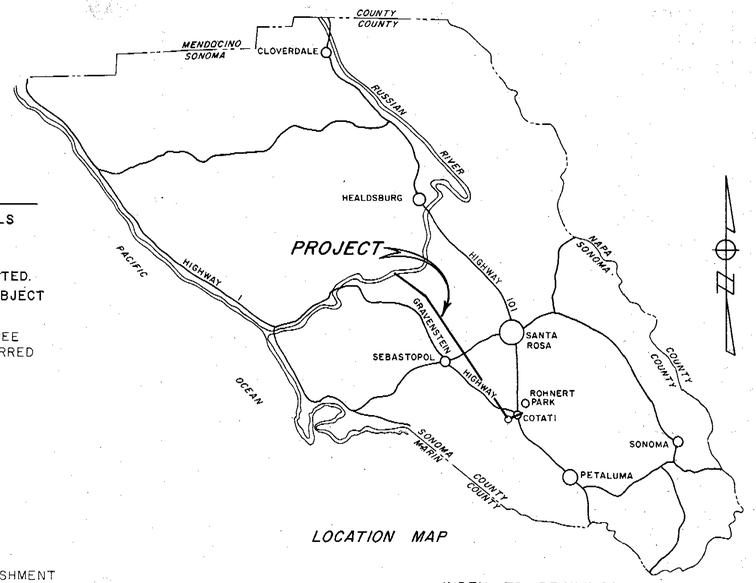

LOCATION MAP

GENERAL NOTES

1. ELEVATIONS SHOWN ARE IN FEET & DECIMALS THEREOF ABOVE N.G.S. M.S.L.
2. STATIONS SHOWN ON PLAN & PROFILE ARE HORIZONTAL DISTANCES UNLESS OTHERWISE NOTED.
3. ALL STATIONS, GRADES & ELEVATION ARE SUBJECT TO REVISION TO SUIT FIELD CONDITIONS.
4. DRAWINGS ARE DESIGNATED BY THEIR LAST THREE DIGITS, e.g., DRAWING NO. 60-4-102.201 IS REFERRED TO AS DRAWING NO. 201, ETC.

LEGEND

FACILITIES TO BE CONSTRUCTED

CENTERLINE OF RIGHT OF WAY
ELECTROLYSIS TEST STATION ..... TS 2P
GALVANIC ANODE ..... GA A
PRE = PERMANENT REFERENCE ELECTRODE
VEGETATION
EROSION CONTROL
PERMANENT PASTURE REESTABLISHMENT
INSULATION FLANGE
HIGH PRESSURE PIPELINE WARNING SIGN
MANHOLE
MAINLINE VALVE
AIR VALVE
PRESSURE RELIEF VALVE
TURNOUT
BLOWOFF
BLIND TEE OR LATERAL
AIR VALVE AROUND MAINLINE VALVE
FIELD GATE ON ℄ OF R/W

CLASS OF BEDDING & BACKFILL DESIGNATION PER DWG. NO. WA-7 SPECIFIC PIPE ELEVATIONS SHOWN ON PIPE PROFILES ARE FOR OUTSIDE TOP OF PIPE.

EXISTING FACILITIES

GAS LINE ····— G —····
SANITARY SEWER •— SS —•— •—
WATER LINE — 6"W— — —
TELEVISION CABLE —— TV —— ——
ELECTRIC CABLE — — E — — —
TELEPHONE CABLE ——▲——
FENCE —— x —— x ——
PROPERTY LINE —— PL ——
POWER AND/OR TELEPHONE CABLE & GUY —o——

OTHER INFORMATION

SOIL SAMPLE LOCATION
SURVEY CONTROL POINT

REFERENCE POINTS FOR LOCATING PIPE CENTERLINE

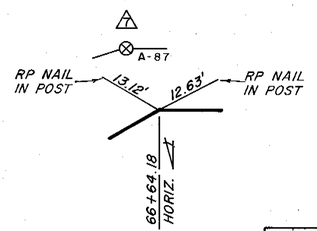

INDEX TO DRAWINGS

SHT. NO.	DRAWING NO.	TITLE
1	60-4-102.201	LOCATION MAP & INDEX TO DRAWINGS
2	102.202	HYDRAULIC GRADE LINE
3	102.203	STA. 302+70 TO STA. 314+10
4	102.204	STA. 314+10 TO STA. 344+30
5	102.205	STA. 344+30 TO STA. 374+30
6	102.206	STA. 374+30 TO STA. 404+50
7	102.207	STA. 404+50 TO STA. 434+55
8	102.208	STA. 434+55 TO STA. 464+70
9	102.209	STA. 464+70 TO STA. 494+50
10	102.210	STA. 494+50 TO STA. 524+45
11	102.211	STA. 524+45 TO STA. 554+50
12	102.212	STA. 554+50 TO STA. 584+50
13	102.213	STA. 584+50 TO STA. 614+65
14	102.214	STA. 614+65 TO STA. 644+70
15	102.215	STA. 644+70 TO STA. 674+65
16	102.216	STA. 674+65 TO STA. 704+75
17	102.217	STA. 704+75 TO STA. 735+15
18	102.218	STA. 735+15 TO STA. 766+00
19	102.219	STA. 766+00 TO STA. 783+90
20	102.220	STA. 783+90 TO STA. 805+40
21	102.221	STA. 805+40 TO STA. 826+55.28
22	102.222	RAILROAD & HIGHWAY CROSSINGS
23	102.223	LAGUNA de SANTA ROSA CROSSING #2
24	102.224	WASHOE CREEK CROSSING
25	102.225	COTATI RESERVOIR CONNECTION
26	102.226	WELD LENGTH FOR THRUST ON PIPE
27	102.227	LOG OF BORINGS
28	102.228	STRIP SITE
29	102.229	MISCELLANEOUS DETAILS
30	WA-1	GALVANIC ANODES & ELECTRO.. TEST STAS.
31	WA-2	DISTRIBUTION TURNOUTS TYPE A & TYPE B
32	WA-3	MAIN LINE VALVE TYPE A & B
33	WA-4	BLOWOFF TYPE A & B
34	WA-5	AIR VALVE INSTALLATION TYPE A, B & C
35	WA-6	PRESSURE RELIEF VALVE INSTALLATION
36	WA-7	PIPE BEDDING, BACKFILL & TRENCH SURFACING
37	WA-8	HIGH PRESSURE PIPELINE WARNING SIGN

UTILITY NOTES

THE AGENCY HAS, TO THE BEST OF ITS ABILITY, DELINEATED ON THE DRAWINGS UTILITY INSTALLATIONS TO BE ENCOUNTERED WITHIN THE LIMITS OF THE WORK. SUCH INFORMATION IS BASED UPON INFORMATION FURNISHED TO THE AGENCY BY THE UTILITY OWNERS AND THE AGENCY DOES NOT EITHER EXPRESSLY OR BY IMPLICATION GUARANTEE THAT UTILITY INSTALLATIONS WILL BE FOUND AT THE LOCATIONS OR DEPTHS INDICATED. THE AGENCY ASSUMES NO RESPONSIBILITY FOR THE ACCURACY OF THE INFORMATION SHOWN OR FOR THE INADVERTENT OMISSION OF ANY SUCH INFORMATION. PROFILES DO NOT SHOW ALL UTILITY SERVICE LATERALS.

Return to Index

No.	DATE	REVISION	By

RUSSIAN RIVER - COTATI INTERTIE PROJECT
HALL ROAD TO COTATI RESERVOIR
LOCATION MAP & INDEX TO DRAWINGS

SCALE: AS SHOWN | APPROVED CHIEF ENGINEER | DRAWN SKMc
DATE: JULY 15, 1975 | RE 8271 | CHECKED
DESIGNED | SUBMITTED | DRAWING NUMBER 60-4-102.201

SONOMA COUNTY WATER AGENCY

SHEET NO. 1

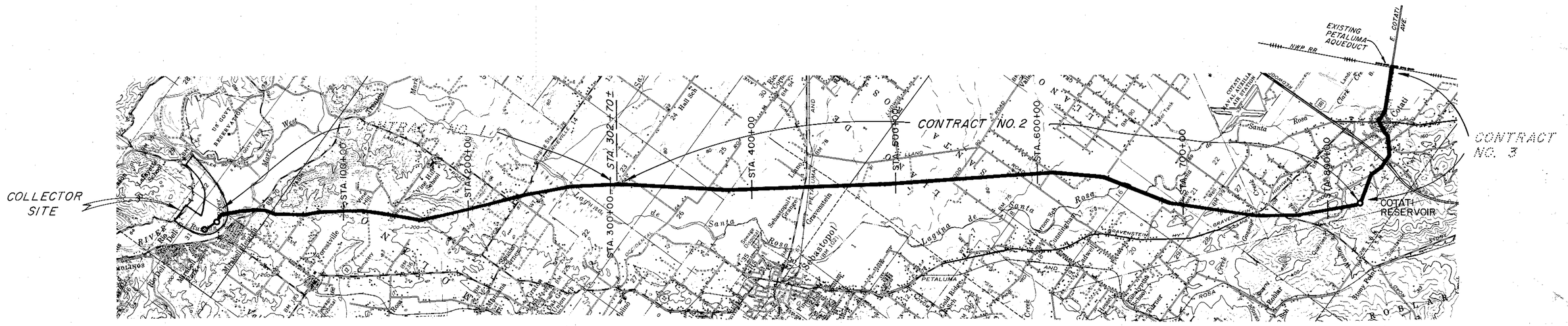

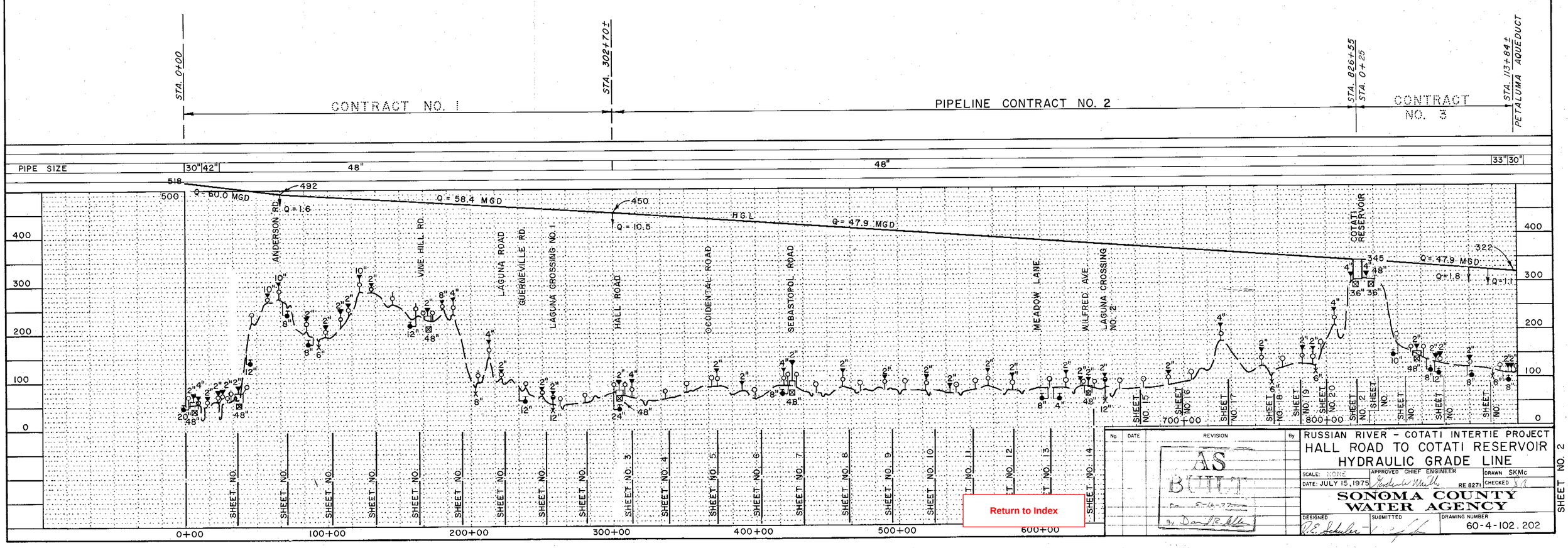

Return to Index

No.	DATE	REVISION	By
		AS BUILT 5-16-77 By Dan R. Mills	

RUSSIAN RIVER – COTATI INTERTIE PROJECT

HALL ROAD TO COTATI RESERVOIR HYDRAULIC GRADE LINE

SCALE: NONE | APPROVED CHIEF ENGINEER | DRAWN SKMc

DATE: JULY 15, 1975 | RE 8271 | CHECKED

SONOMA COUNTY WATER AGENCY

DESIGNED | SUBMITTED | DRAWING NUMBER 60-4-102.202

SHEET NO. 2

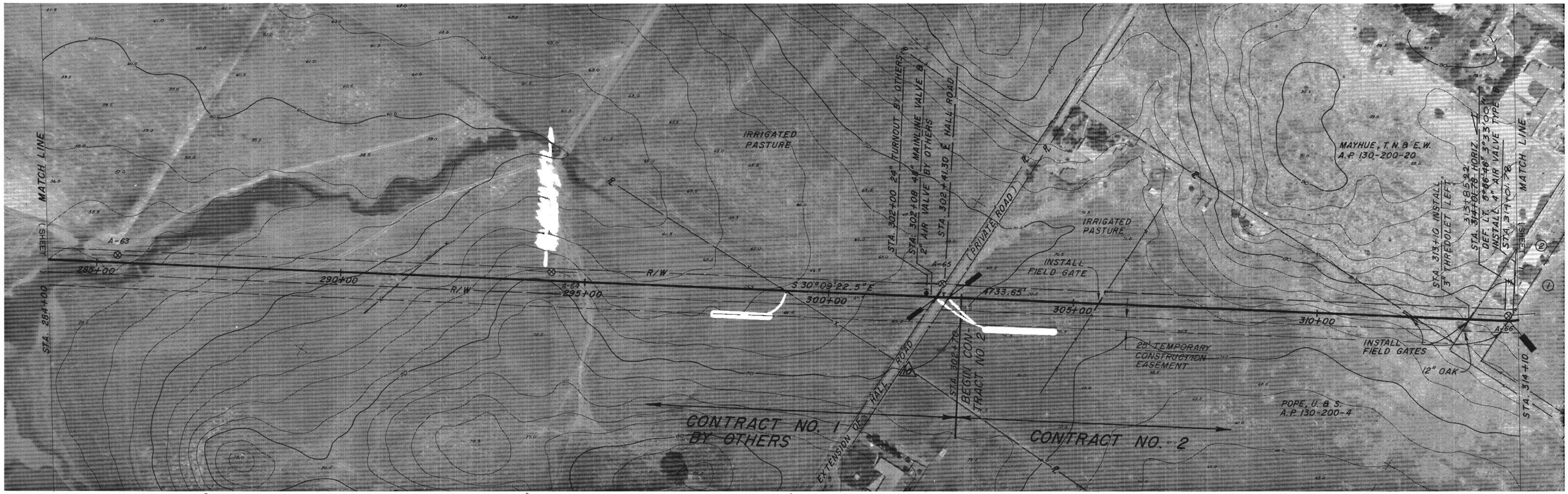

HEAD in ft.		~~400~~ 440	~~380~~ 440
SPECIAL		WELD JOINTS	
PIPE SIZE & TYPE	48"		
REVEGETATION			
BEDDING/BACKFILL	d/D		d/D

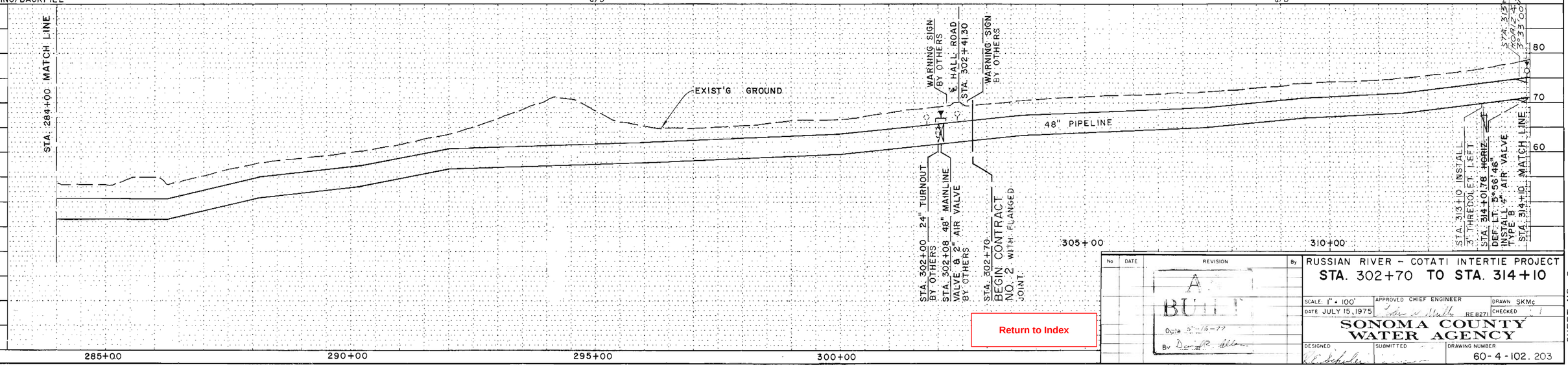

No	DATE	REVISION	By
		AS BUILT Date 5-16-77 By Don R. Allen	

RUSSIAN RIVER – COTATI INTERTIE PROJECT

STA. 302+70 TO STA. 314+10

SCALE: 1" = 100' | APPROVED CHIEF ENGINEER | DRAWN SKMc

DATE JULY 15, 1975 | RE 827I | CHECKED

SONOMA COUNTY WATER AGENCY

DESIGNED | SUBMITTED | DRAWING NUMBER 60-4-102.203

SHEET NO. 3

Return to Index

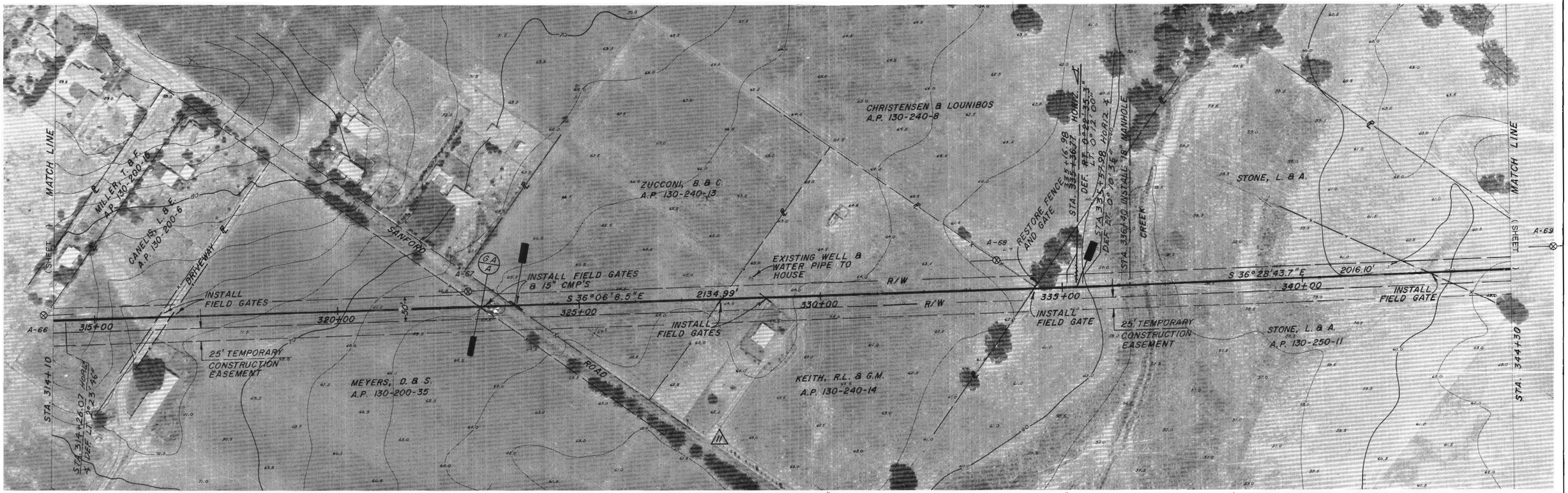

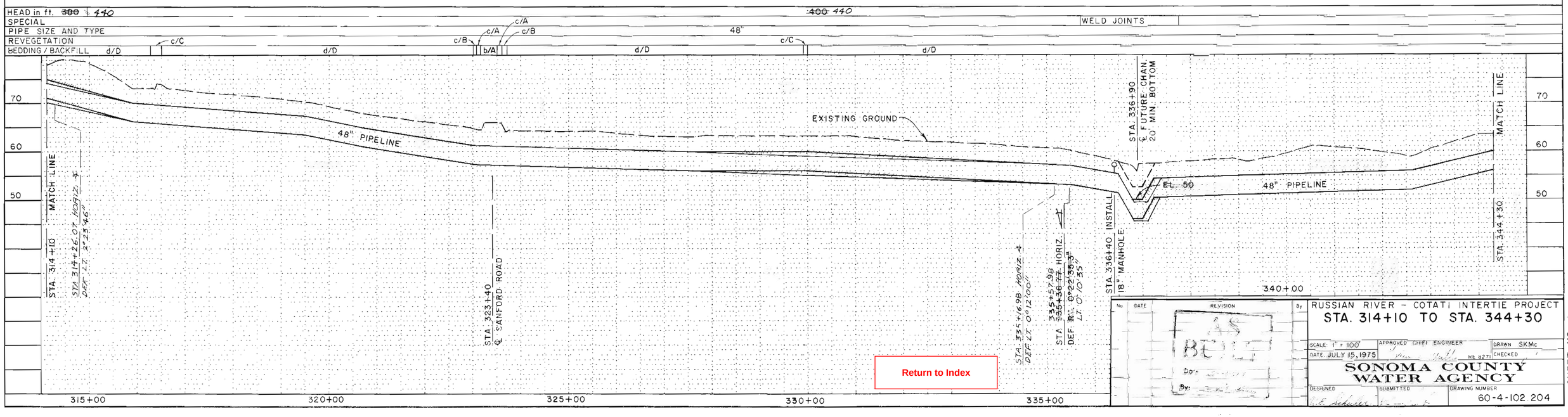

Return to Index

No.	DATE	REVISION	By
		AS BUILT	

RUSSIAN RIVER - COTATI INTERTIE PROJECT

STA. 314+10 TO STA. 344+30

SCALE: 1" = 100' | APPROVED CHIEF ENGINEER | DRAWN SKMc

DATE: JULY 15, 1975 | HL 827 | CHECKED

SONOMA COUNTY WATER AGENCY

DESIGNED | SUBMITTED | DRAWING NUMBER 60-4-102.204

SHEET NO. 4

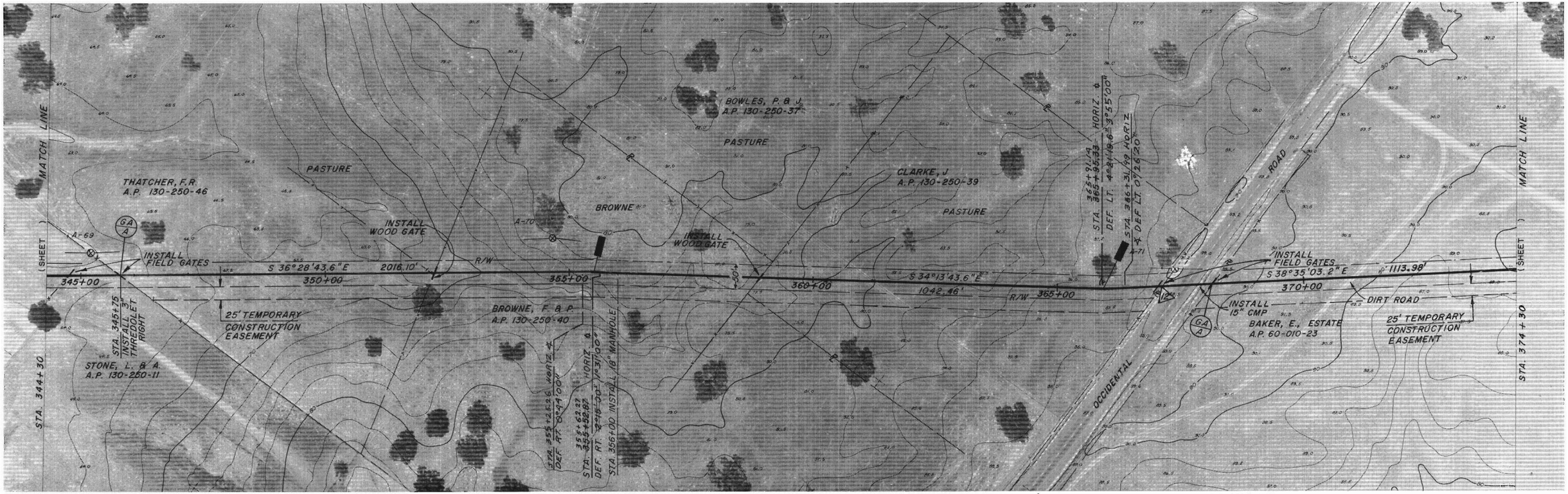

HEAD in ft.	~~400~~ 440	~~380~~ 440	360
SPECIAL			
PIPE SIZE AND TYPE	48"	48"	
REVEGETATION		c/B c/A c/A c/B b/A	
BEDDING / BACKFILL	d/D		d/D

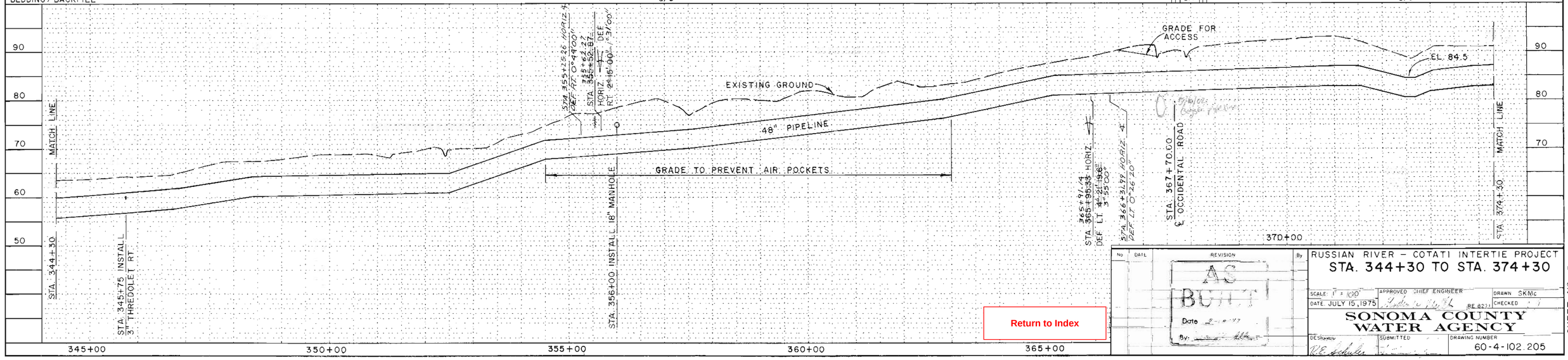

Return to Index

No	DATE	REVISION	By
		AS BUILT Date 2-6-77 By:	

RUSSIAN RIVER – COTATI INTERTIE PROJECT

STA. 344+30 TO STA. 374+30

SCALE: 1" = 100' | APPROVED CHIEF ENGINEER | DRAWN SKMc

DATE JULY 15, 1975 | RE 8221 | CHECKED

SONOMA COUNTY WATER AGENCY

DESIGNED | SUBMITTED | DRAWING NUMBER 60-4-102.205

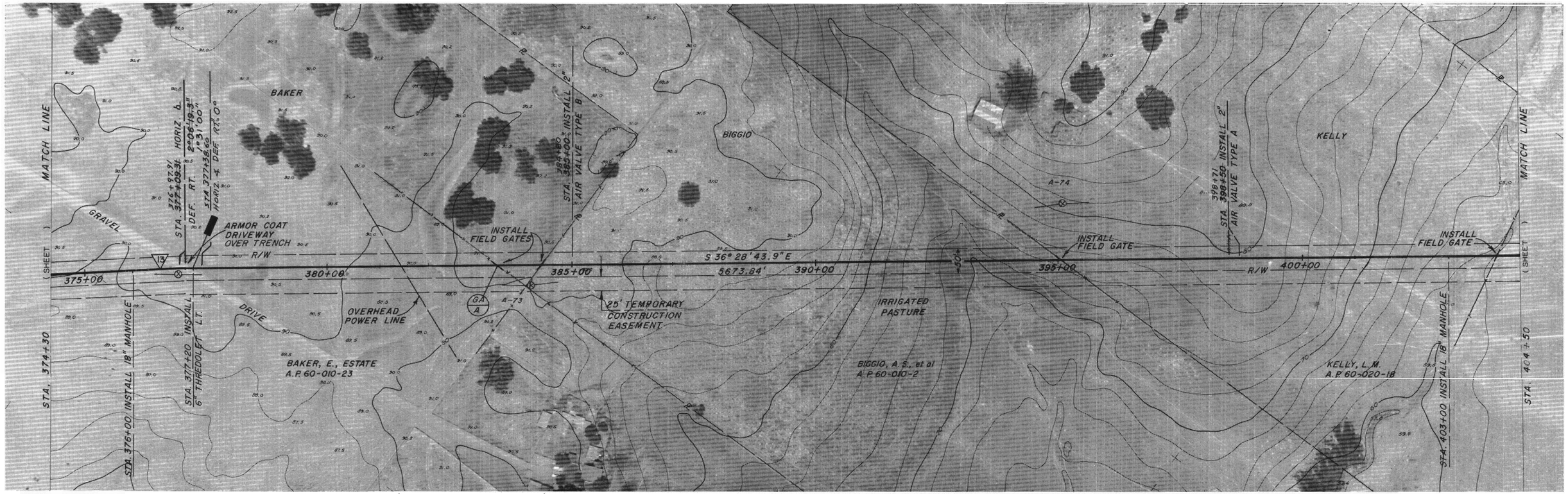

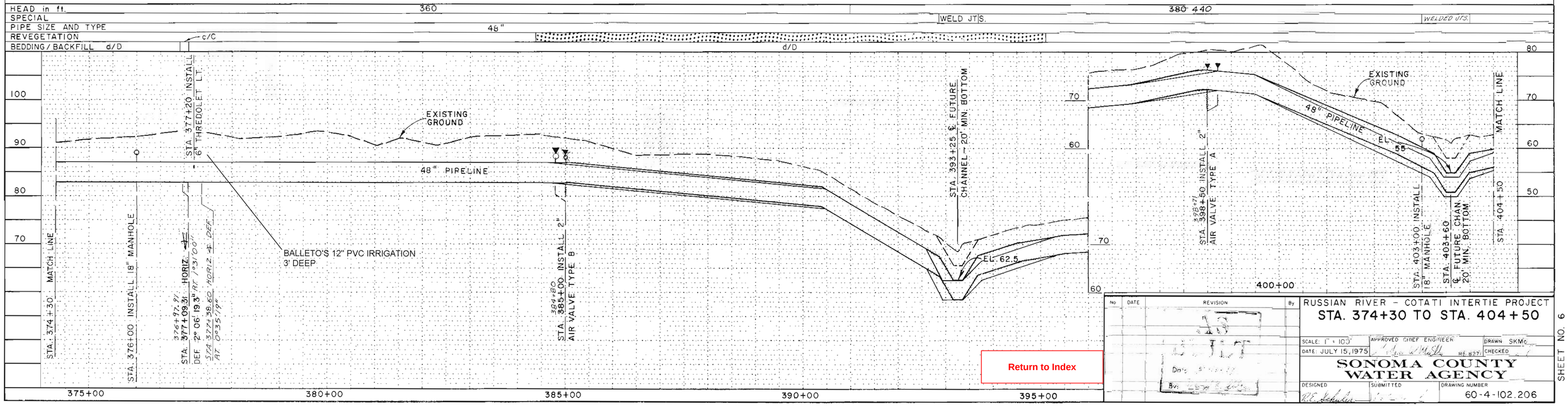

Return to Index

No	DATE	REVISION	By

RUSSIAN RIVER – COTATI INTERTIE PROJECT

STA. 374+30 TO STA. 404+50

SCALE: 1" = 100'
DATE: JULY 15, 1975
APPROVED CHIEF ENGINEER
RE 827
DRAWN SKMc
CHECKED
DESIGNED
SUBMITTED

SONOMA COUNTY WATER AGENCY

DRAWING NUMBER 60-4-102.206

SHEET NO. 6

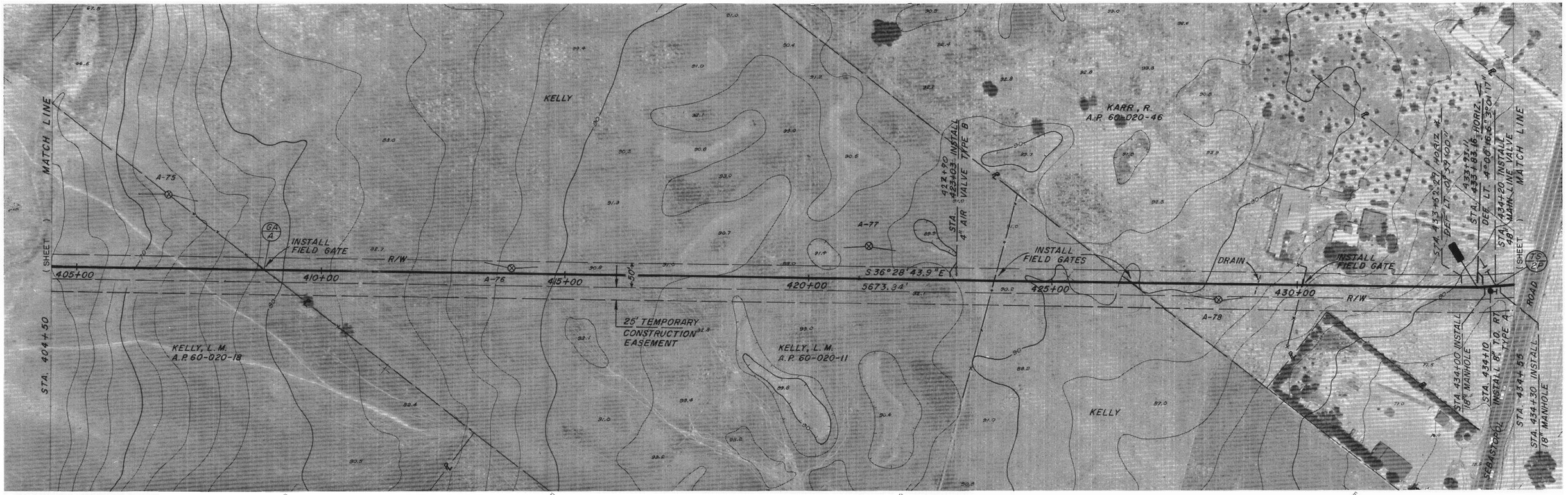

HEAD in ft. ~~380~~ ~~440~~		360	
SPECIAL			WELDED JTS
PIPE SIZE AND TYPE	48"	48"	
REVEGETATION			
BEDDING / BACKFILL		d/D	

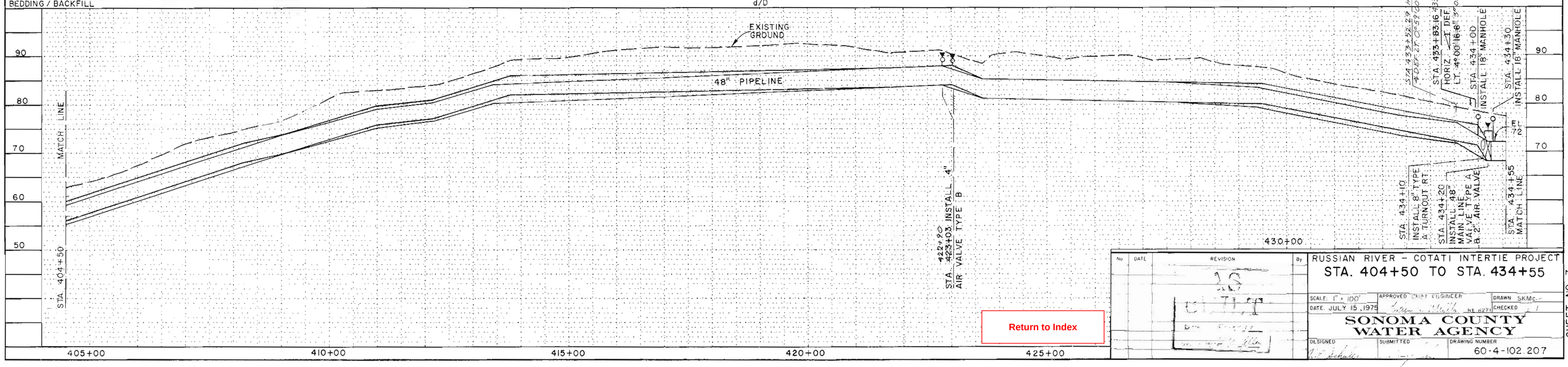

Return to Index

No	DATE	REVISION	By

RUSSIAN RIVER - COTATI INTERTIE PROJECT

STA. 404+50 TO STA. 434+55

SCALE: 1" = 100' | APPROVED: DIST. ENGINEER | DRAWN: SKMc...

DATE: JULY 15, 1975 | CHECKED

SONOMA COUNTY WATER AGENCY

DESIGNED | SUBMITTED | DRAWING NUMBER 60-4-102.207

SHEET NO. 7

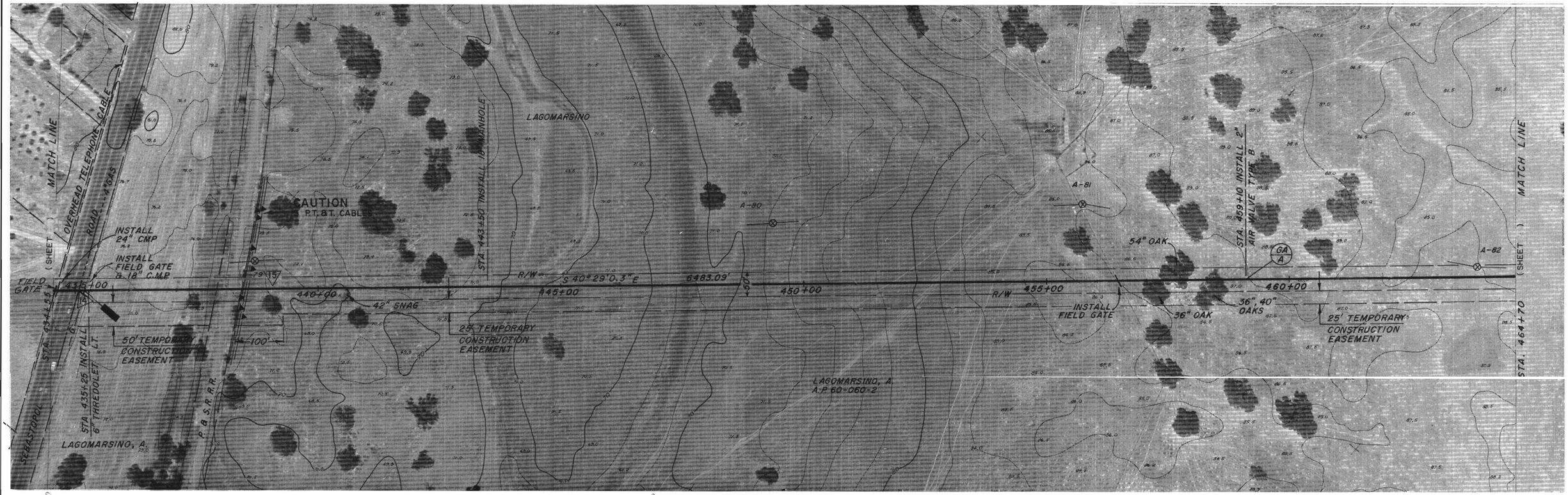

EXCESSIVE PIPE DEFLECTION

HEAD in ft.	JACKED 360	360	~~380~~ 440	360	340-360	360	
SPECIAL	WELDED J'TS						
PIPE SIZE AND TYPE	JACKED 48"						
REVEGETATION							
BEDDING / BACKFILL	d/D						

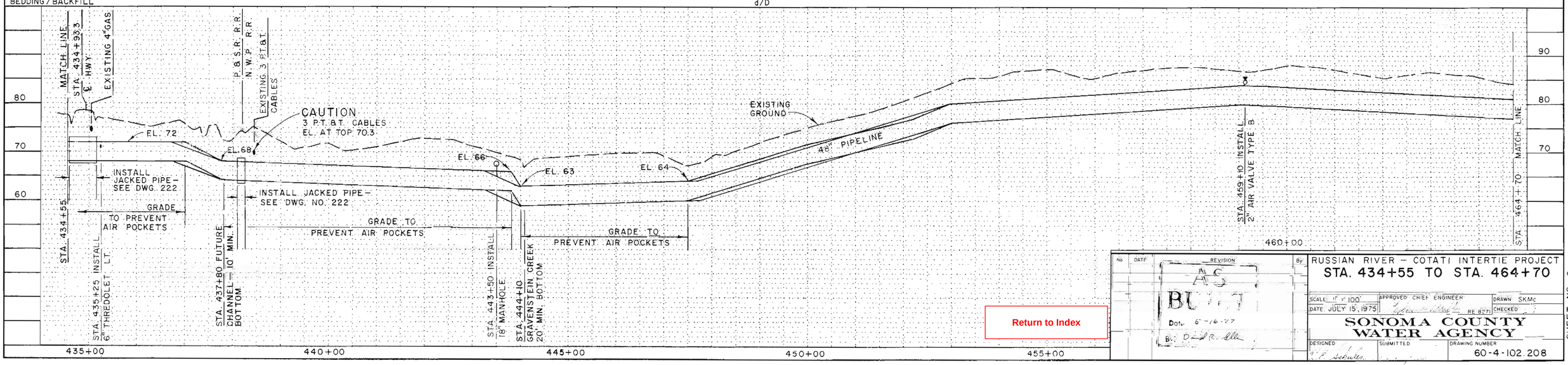

Return to Index

No	DATE	REVISION	By
		AS BUILT Date 6-16-77 By D.R. Ellis	

RUSSIAN RIVER – COTATI INTERTIE PROJECT
STA. 434+55 TO STA. 464+70

SCALE: 1" = 100'
DATE: JULY 15, 1975
APPROVED CHIEF ENGINEER
RE 8271
DRAWN SKMc
CHECKED

SONOMA COUNTY WATER AGENCY

DESIGNED
SUBMITTED
DRAWING NUMBER 60-4-102.208

SHEET NO. 8

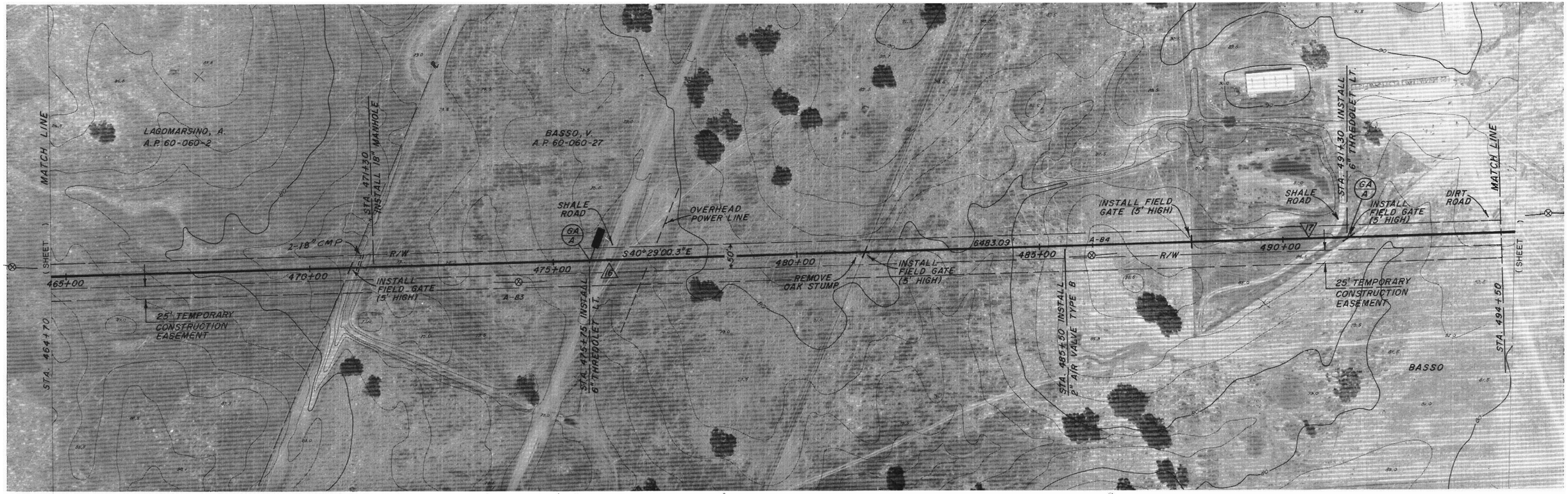

HEAD in ft.	360			340 360	360
SPECIAL	← WELD JOINTS				
PIPE SIZE AND TYPE	48"			48"	
REVEGETATION		c/C			c/C c/B
BEDDING / BACKFILL	d/D		d/D		d/D

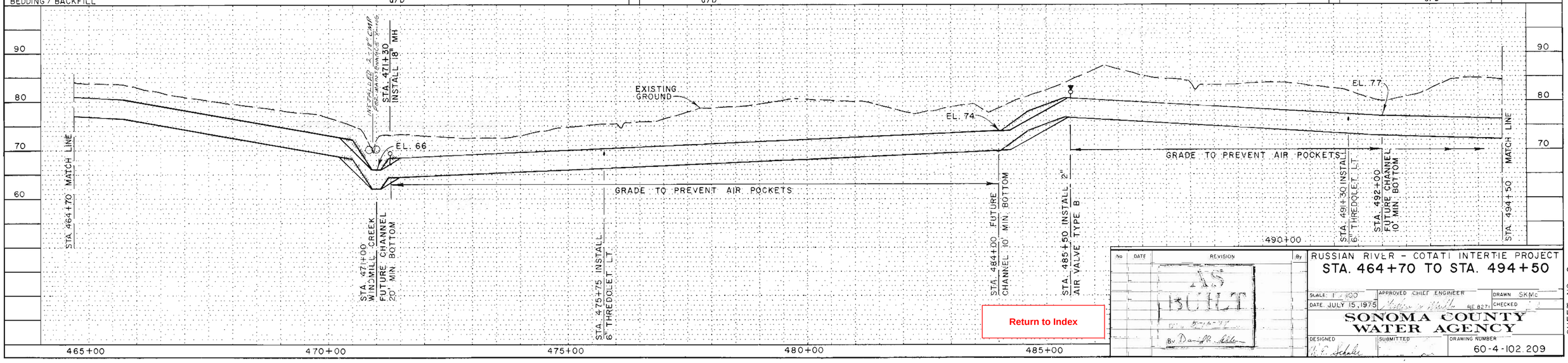

Return to Index

No	DATE	REVISION	By
		AS BUILT 5-16-77 By Daniel Miller	

RUSSIAN RIVER - COTATI INTERTIE PROJECT
STA. 464+70 TO STA. 494+50

SCALE: 1" = 100'	APPROVED CHIEF ENGINEER	DRAWN SKMC
DATE JULY 15, 1975	RE 8271	CHECKED
SONOMA COUNTY WATER AGENCY		
DESIGNED	SUBMITTED	DRAWING NUMBER
H.F. Schaller		60-4-102.209

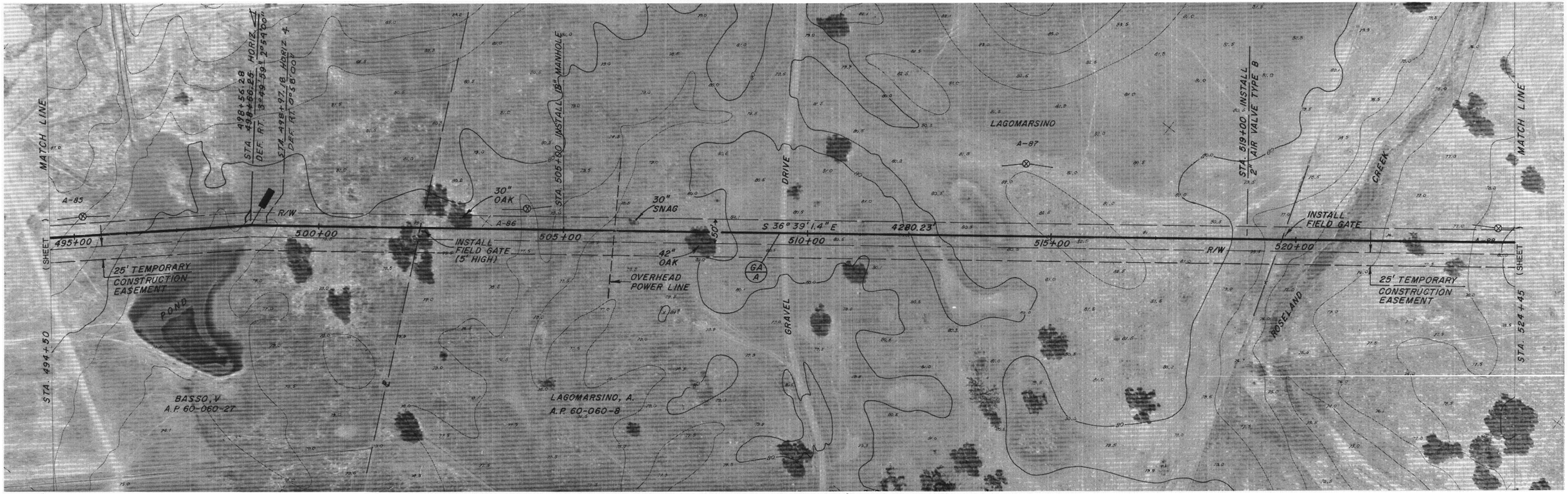

HEAD in ft.	360			~~340~~ 360	
SPECIAL		WELD JOINTS			WELD JOINTS
PIPE SIZE AND TYPE	48"			48"	
REVEGETATION					
BEDDING / BACKFILL	d/D	c/C	d/D		

DEFLECTION 2°-3° 480

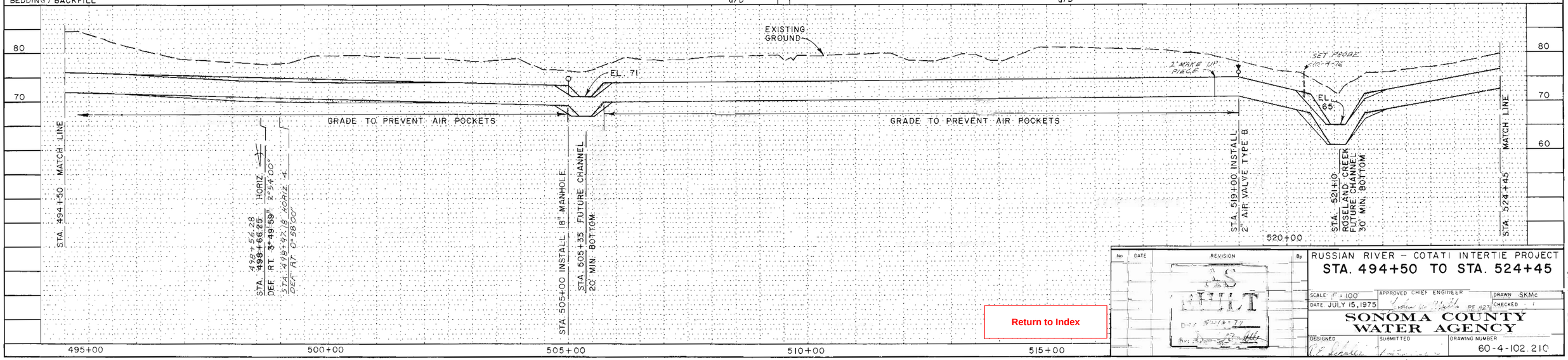

Return to Index

No	DATE	REVISION	By

RUSSIAN RIVER – COTATI INTERTIE PROJECT

STA. 494+50 TO STA. 524+45

SCALE 1" = 100' | APPROVED CHIEF ENGINEER | DRAWN SKMc

DATE JULY 15, 1975 | RE 827 | CHECKED

SONOMA COUNTY WATER AGENCY

DESIGNED | SUBMITTED | DRAWING NUMBER 60-4-102.210

SHEET NO 10

Return to Index

No	DATE	REVISION	By
		AS BUILT Date 5-16-77 (unclear) By:	

RUSSIAN RIVER – COTATI INTERTIE PROJECT

STA. 524+45 TO STA. 554+50

SCALE 1" = 100'
DATE JULY 15, 1975
APPROVED CHIEF ENGINEER RE 8271
DRAWN
CHECKED

SONOMA COUNTY WATER AGENCY

DESIGNED R.E. Schuler
SUBMITTED
DRAWING NUMBER 60-4-102.211

SHEET NO. 11

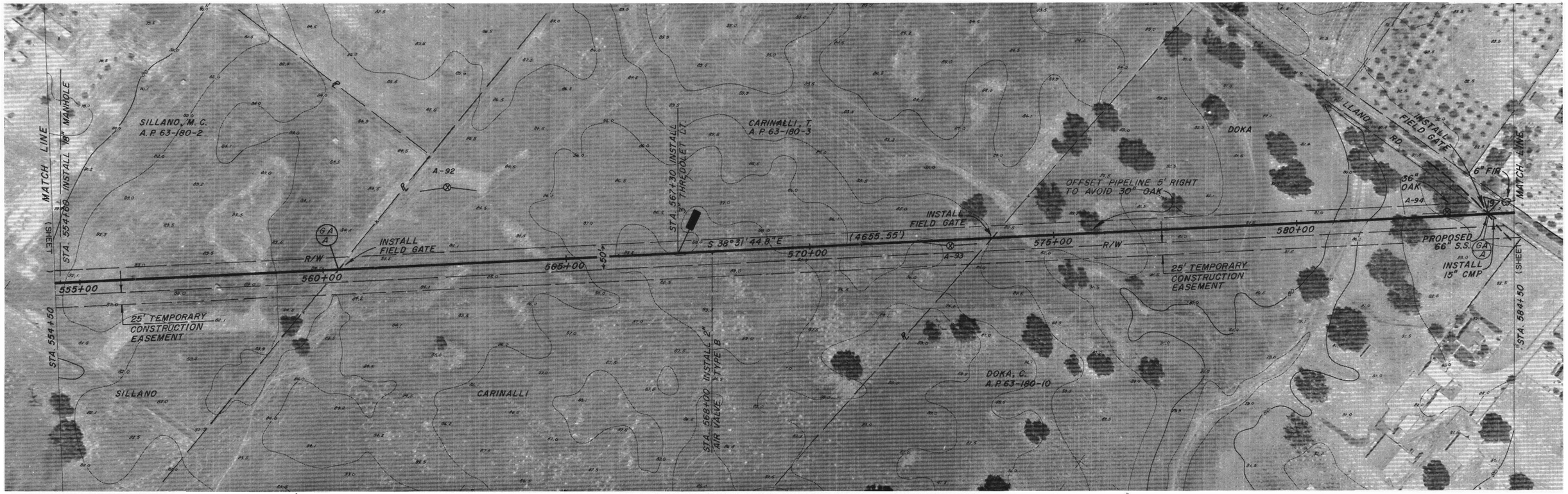

HEAD in ft.	~~340~~ 360	320	~~340~~ 360	320
SPECIAL				WELD JOINTS
PIPE SIZE AND TYPE	48"		48"	
REVEGETATION				
BEDDING / BACKFILL	d/D			c/B c/A b/A

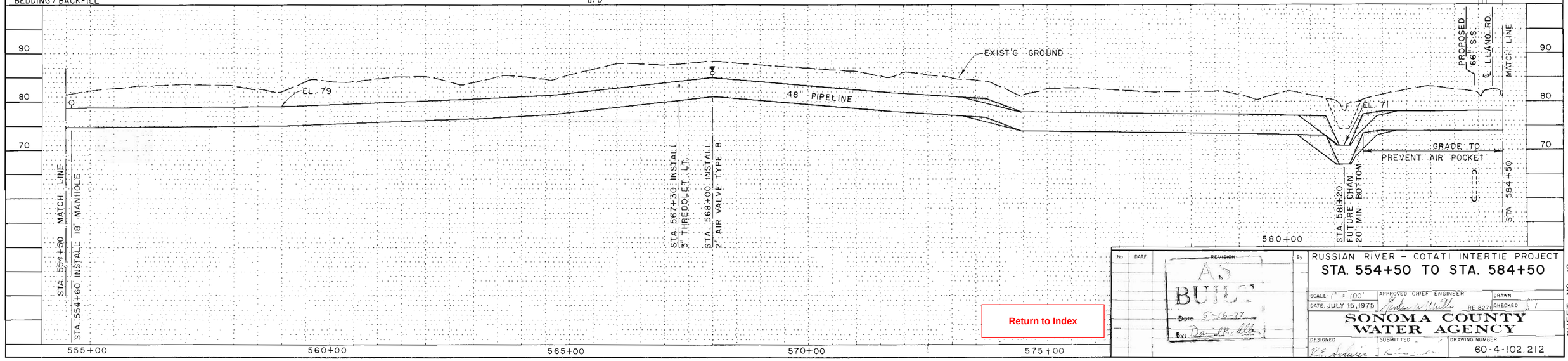

Return to Index

No	DATE	REVISION	By
		AS BUILT Date 5-16-77 By:	

RUSSIAN RIVER – COTATI INTERTIE PROJECT

STA. 554+50 TO STA. 584+50

SCALE: 1" = 100' | APPROVED CHIEF ENGINEER | DRAWN

DATE: JULY 15, 1975 | RE 827 | CHECKED

SONOMA COUNTY WATER AGENCY

DESIGNED | SUBMITTED | DRAWING NUMBER

60-4-102.212

SHEET NO. 12

Return to Index

No	DATE	REVISION	By
		AS BUILT Date 5-16-77 B David R. Allen	

RUSSIAN RIVER – COTATI INTERTIE PROJECT

STA. 584+50 TO STA. 614+65

SCALE 1" = 100'
DATE JULY 15, 1975
APPROVED CHIEF ENGINEER RE 9271
DRAWN SKMc
CHECKED

SONOMA COUNTY WATER AGENCY

DESIGNED C.E. Schuler
SUBMITTED
DRAWING NUMBER 60-4-102.213

SHEET NO. 13

HEAD in ft.	320	
SPECIAL		WELDED JOINTS
PIPE SIZE AND TYPE	48"	48"
REVEGETATION	c/B, c/C, c/C, c/C	
BEDDING / BACKFILL	d/E, d/E, d/E, d/D, d/D, d/E, c/C, d/D	

Return to Index

No	DATE	REVISION	By
		AS BUILT Date 5-16-77 By: David R. Olte	

RUSSIAN RIVER – COTATI INTERTIE PROJECT

STA. 614+65 TO STA. 644+70

SCALE: 1" = 100'
DATE: JULY 15, 1975
APPROVED CHIEF ENGINEER: [signature] RE 8271
DRAWN: SKMc
CHECKED: [signature]

SONOMA COUNTY WATER AGENCY

DESIGNED: R.E. Schuler
SUBMITTED: [signature]
DRAWING NUMBER: 60-4-102.214

SHEET NO. 14

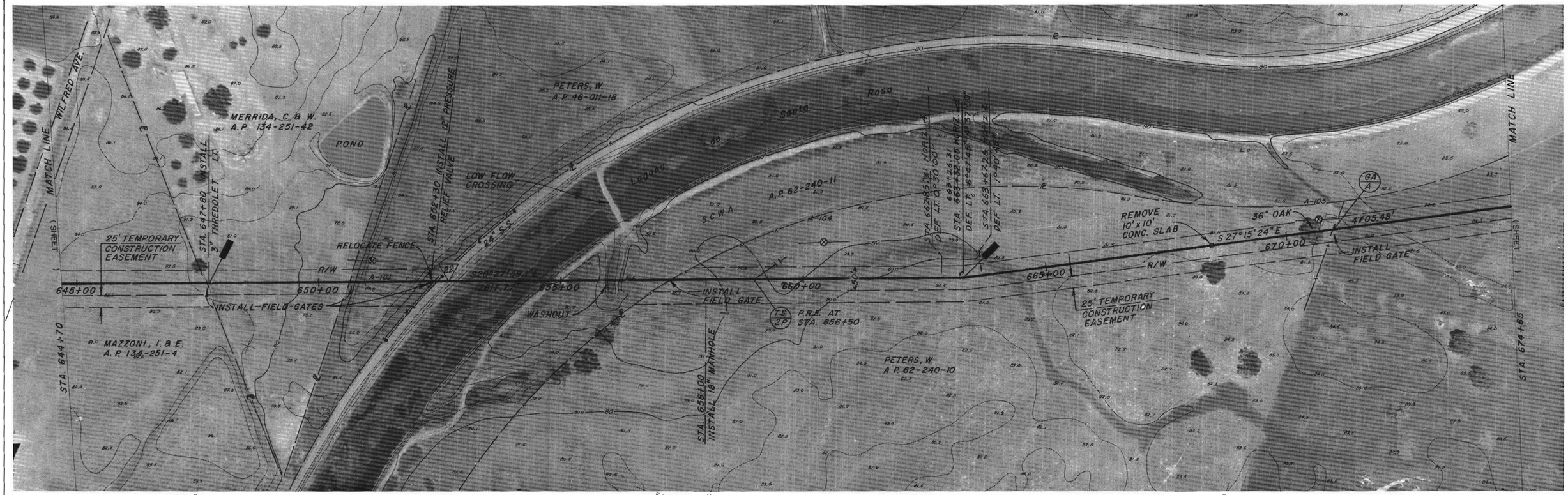

HEAD in ft.	320	~~340~~ 360		320	
SPECIAL	WELDED JOINTS	WELD JOINTS			
PIPE SIZE & TYPE	48"			48"	
REVEGETATION			d/B		
BEDDING/BACKFILL	d/D	d/B	d/E	d/D	

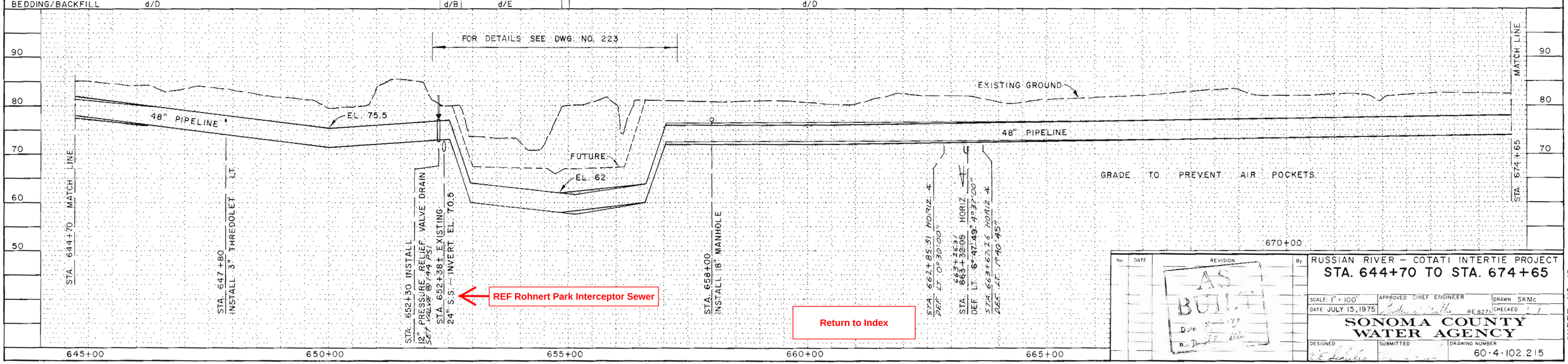

REF Rohnert Park Interceptor Sewer

Return to Index

No	DATE	REVISION	By
		AS BUILT Date By	

RUSSIAN RIVER – COTATI INTERTIE PROJECT

STA. 644+70 TO STA. 674+65

SCALE: 1" = 100'	APPROVED CHIEF ENGINEER	DRAWN SKMc
DATE: JULY 15, 1975	RE 8271	CHECKED

SONOMA COUNTY WATER AGENCY

DESIGNED	SUBMITTED	DRAWING NUMBER
		60-4-102.215

SHEET NO. 15

PLATE 1 - PLAN - PROFILE - F.A.S.
CLEARPRINT PAPER CO., S.F., CAL.
NO. 1200H-1

25+43.05 B.C. MATCH LINE CONFORM TO EXISTING BEGIN SERVICE ROAD

28+00 EXIST. 24" C.M.P. FG = 79.78

EXISTING SERVICE ROAD
S = 0.00067

35+00 EXIST. 54" C.M.P. FG = 80.25

39+80 GRADE BREAK FG = 80.57

40+20 G.B. FG = 80.60

40+50.31 P.O.C. MATCH LINE FG = 80.62

RELOCATE 24" C.M.P. SEE SHEET NO. 17

474.88' OF 24" S.S. S=0.001

474.88' OF 24" S.S. S=0.001

499.25' OF 24" S.S. S=0.001

18' JOINT - 24" CL. 4 DUCTILE IRON PIPE SEE PLAN BELOW

M.H. NO. 6 (REF) FG = 83.05

M.H. NO. 7 FG = 69.52

M.H. NO. 8 FG = 70.00

M.H. NO. 9 FG = 70.50

PROFILE
HORIZONTAL 1"=50'
VERTICAL 1"=5'

90 80 70 60

27+00 29+00 31+00 33+00 35+00 37+00 39+00

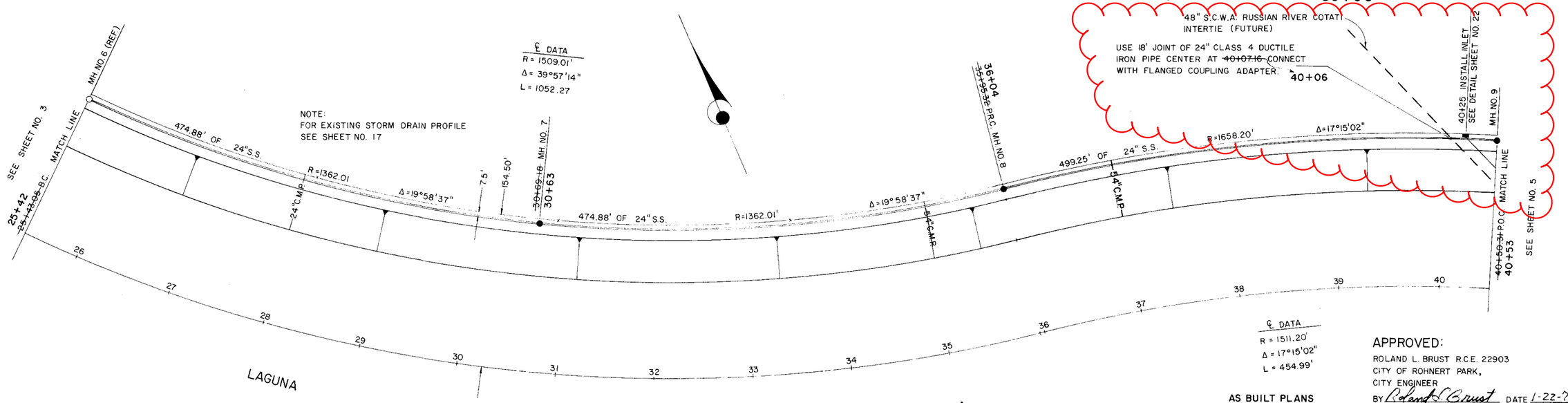

AS BUILT PLANS

APPROVED:
ROLAND L. BRUST R.C.E. 22903
CITY OF ROHNERT PARK,
CITY ENGINEER
BY Roland L. Brust DATE 1-22-75

SCALE	1" = 50"
DRAWN BY	DESIGNED BY D.L.S.
DATE	CHK.
REV.	

ROHNERT PARK INTERCEPTOR SEWER
STA. 25+43.05 TO STA. 40+50.31

M. HUDIS / CONSULTING CIVIL ENGINEER
2100 COUNTY CENTER DRIVE
SANTA ROSA - CALIFORNIA
TELEPHONE 542-6795

SUBMITTED RCE 10578

DWG. NO. 4 OF 22

Return to Index

HEAD in ft.	320	300-320	
SPECIAL			
PIPE SIZE & TYPE	48"	48"	
REVEGETATION			
BEDDING/BACKFILL	d/D	d/B	d/D

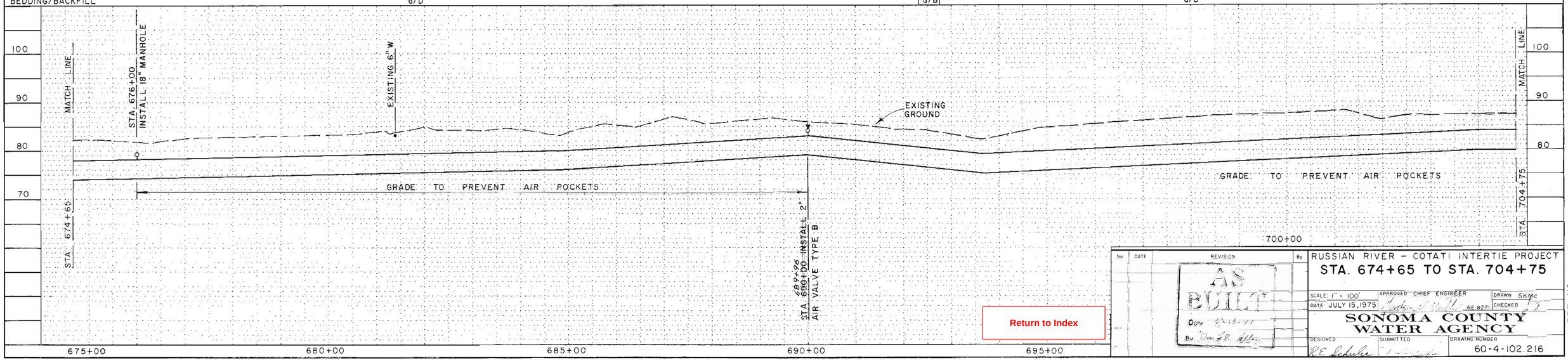

Return to Index

No	DATE	REVISION	By
		AS BUILT Date 8-18-77 By Dan R. Miller	

RUSSIAN RIVER – COTATI INTERTIE PROJECT

STA. 674+65 TO STA. 704+75

SCALE: 1" = 100' | APPROVED CHIEF ENGINEER | DRAWN SKMc

DATE: JULY 15, 1975 | RE 8071 | CHECKED

SONOMA COUNTY WATER AGENCY

DESIGNED | SUBMITTED | DRAWING NUMBER

60-4-102.216

SHEET NO. 16

HEAD in ft.	~~300~~ 320	~~280~~ 320	260	~~240~~ 260	~~220~~ 260	~~200~~ 260	~~220~~ 260
SPECIAL	← WELDED JOINT						
PIPE SIZE & TYPE	48"			48"			
REVEGETATION							
BEDDING/BACKFILL	d/D	d/C		d/D			

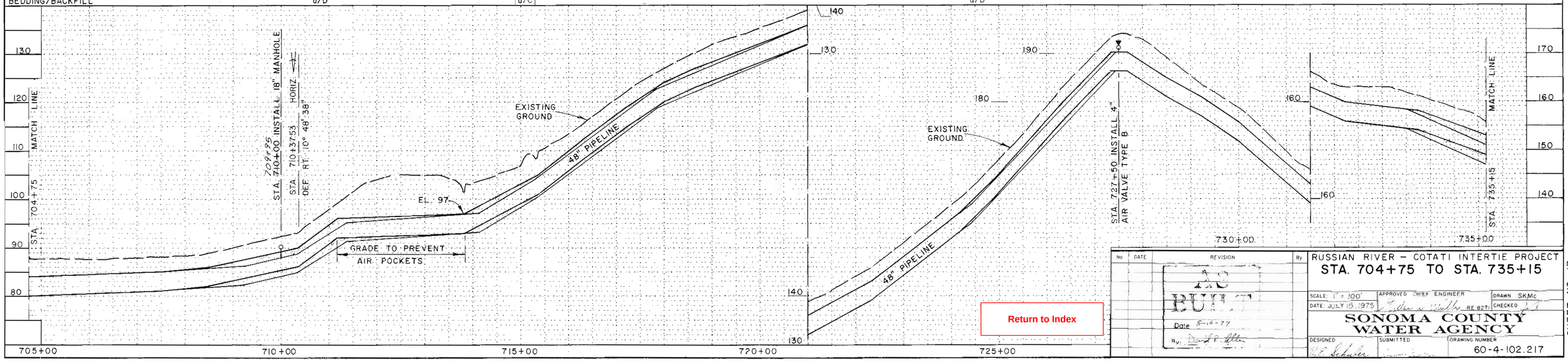

Return to Index

No	DATE	REVISION	By
		RWQCB Date 5-16-77 By	

RUSSIAN RIVER – COTATI INTERTIE PROJECT
STA. 704+75 TO STA. 735+15

SCALE: 1" = 100' | APPROVED CHIEF ENGINEER | DRAWN SKMc
DATE: JULY 15, 1975 | RE 827 | CHECKED

SONOMA COUNTY WATER AGENCY

DESIGNED | SUBMITTED | DRAWING NUMBER
60-4-102.217

SHEET NO. 17

Return to Index

No	DATE	REVISION	By
		AS BUILT Date 5-16-77 By: David R. Allen	

RUSSIAN RIVER – COTATI INTERTIE PROJECT STA. 735+15 TO STA. 766+00		
SCALE: 1" = 100' DATE: JULY 15, 1975	APPROVED CHIEF ENGINEER Gordon W. Miller RE 8271	DRAWN SKMc CHECKED SA
SONOMA COUNTY WATER AGENCY		
DESIGNED R.E. Schuler	SUBMITTED	DRAWING NUMBER 60-4-102.218

Return to Index

No	DATE	REVISION	By

RUSSIAN RIVER – COTATI INTERTIE PROJECT

STA. 766+00 TO STA. 783+90

SCALE: 1" = 100'
DATE: JULY 15, 1975
APPROVED CHIEF ENGINEER RE 6271
DRAWN SKMc
CHECKED

SONOMA COUNTY WATER AGENCY

DESIGNED R.E. Schuler
SUBMITTED
DRAWING NUMBER 60-4-102.219

SHEET NO. 19

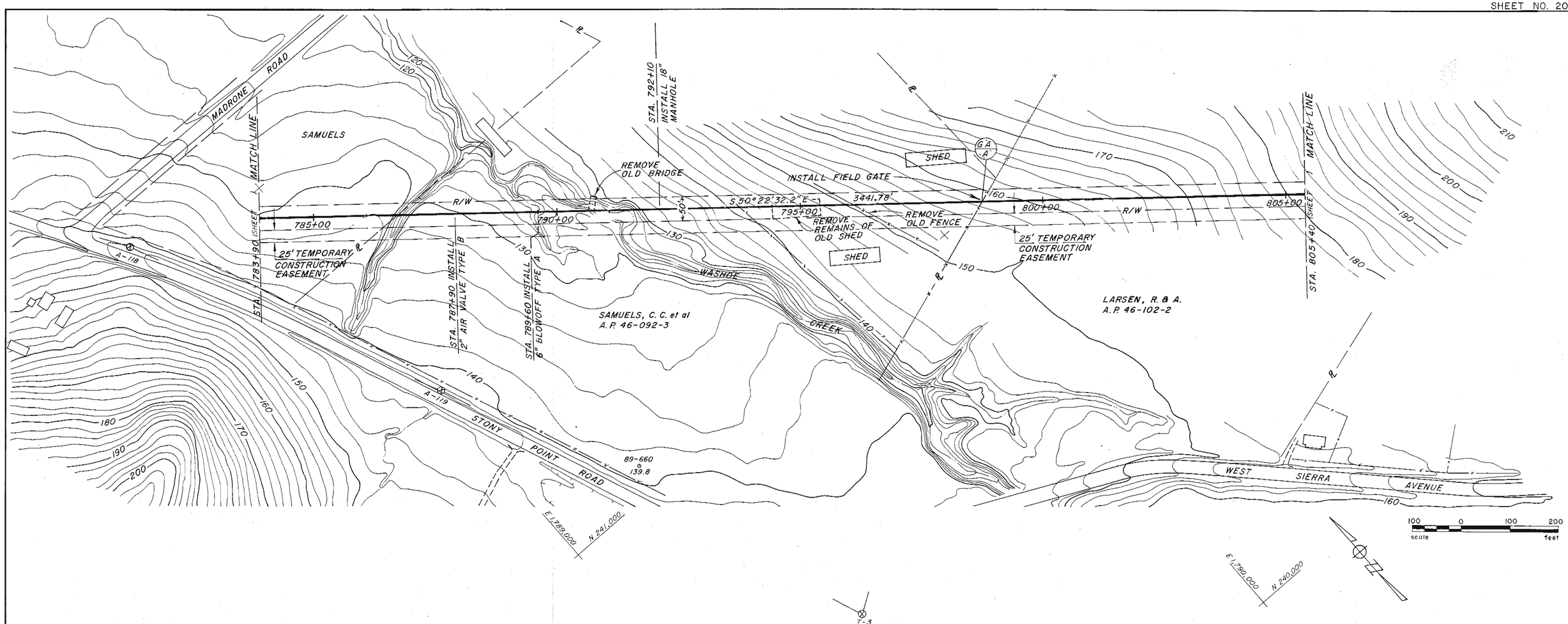

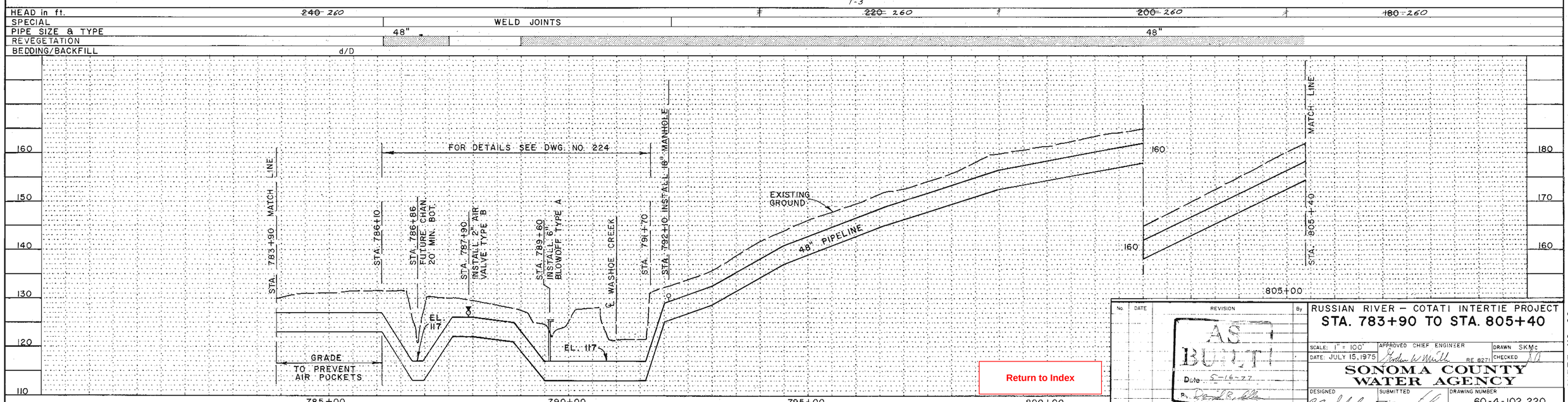

Return to Index

No.	DATE	REVISION	By
		AS BUILT Date 5-16-77	

RUSSIAN RIVER – COTATI INTERTIE PROJECT

STA. 783+90 TO STA. 805+40

SCALE: 1" = 100'
DATE: JULY 15, 1975
APPROVED CHIEF ENGINEER
RE 8271
DRAWN SKMc
CHECKED

SONOMA COUNTY WATER AGENCY

DESIGNED R.E. Schuler
SUBMITTED
DRAWING NUMBER 60-4-102.220

SHEET NO. 20

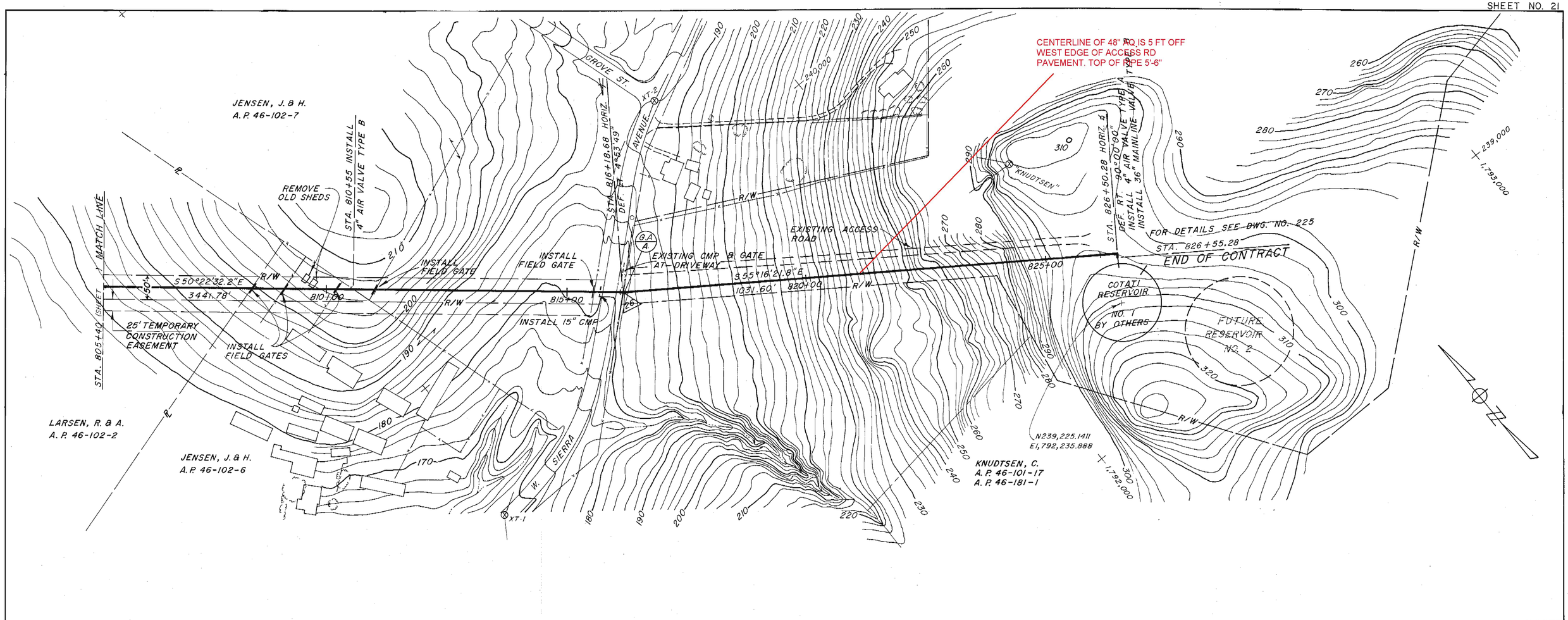

No	DATE	REVISION	By
		5-16-77	

RUSSIAN RIVER – COTATI INTERTIE PROJECT

STA. 805+40 TO STA. 826+55.28

SCALE: 1" = 100'
DATE: JULY 15, 1975
APPROVED CHIEF ENGINEER: Gordon W. Mueller RE 8271
DRAWN SKMc
CHECKED

SONOMA COUNTY WATER AGENCY

DESIGNED: R.E. Schuler
SUBMITTED
DRAWING NUMBER: 60-4-102.221

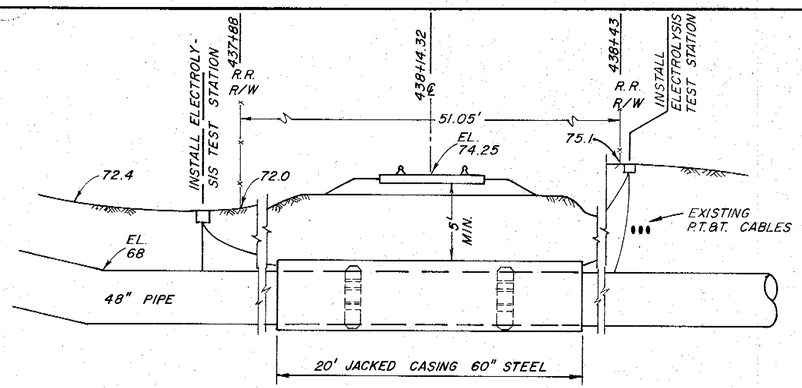

STA. 438+25.3±
RAILROAD CROSSING
PETALUMA & SANTA ROSA
NORTHWESTERN PACIFIC
NOT TO SCALE

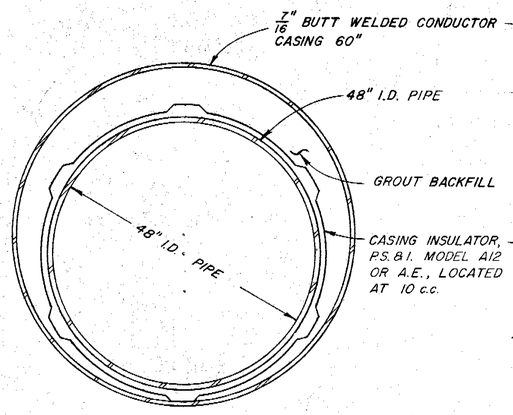

SECTION A-A

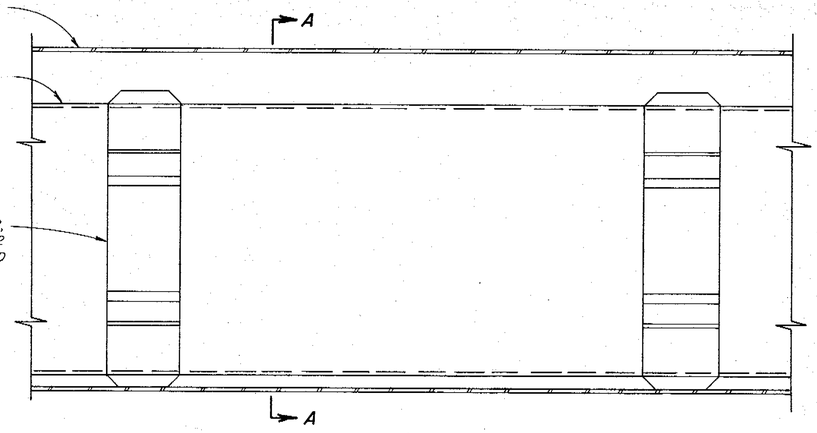

TYPICAL STEEL ENCASEMENT DETAIL
NO SCALE

NOTE: ALL JOINTS OF PIPELINE WITHIN CASING SHALL BE WELDED.

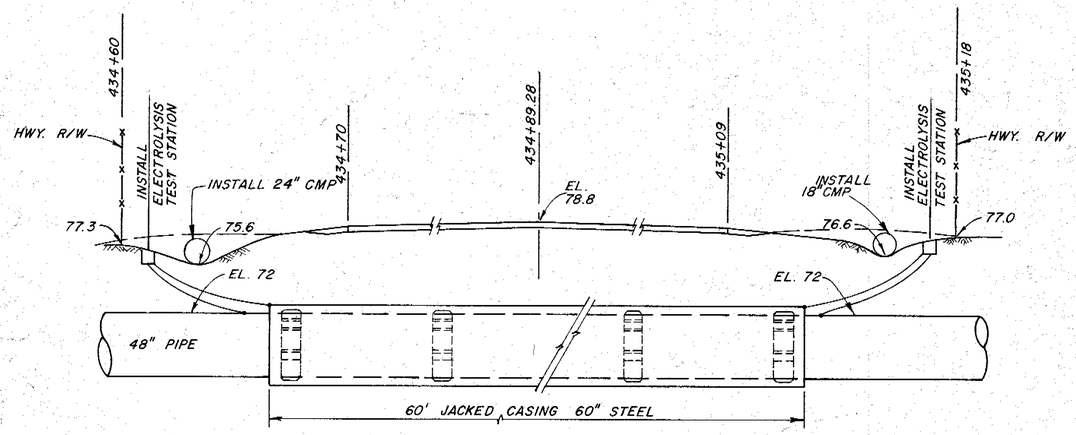

STA. 434+93.3±
HIGHWAY CROSSING
SEBASTOPOL ROAD
NOT TO SCALE

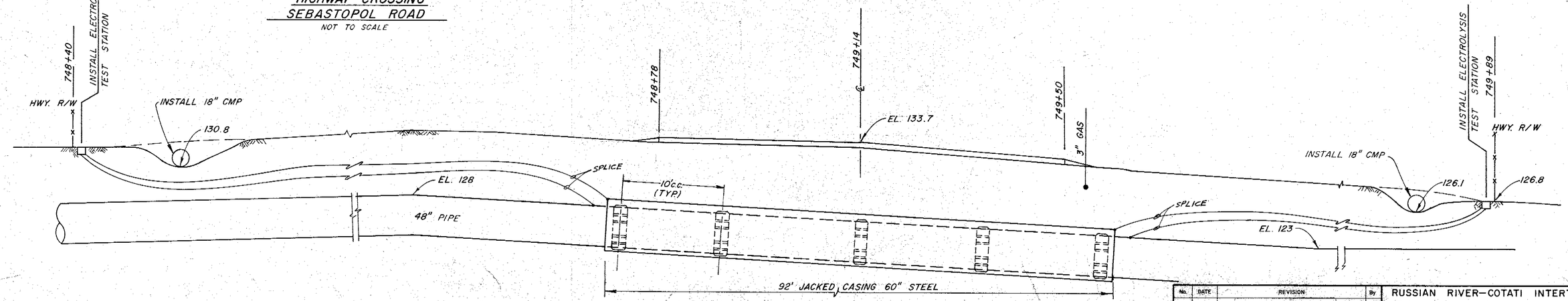

STA. 749+21.3±
HIGHWAY CROSSING
GRAVENSTEIN HIGHWAY
NOT TO SCALE

Return to Index

No.	DATE	REVISION	By
		5-16-77	

RUSSIAN RIVER–COTATI INTERTIE PROJECT
RAILROAD & HIGHWAY CROSSINGS

SCALE: NONE | APPROVED CHIEF ENGINEER | DRAWN
DATE: JULY 15, 1975 | RE 8271 | CHECKED

SONOMA COUNTY WATER AGENCY

DESIGNED R.E. Schuler | SUBMITTED | DRAWING NUMBER 60-4-102.222

SHEET NO. 22

PH 27-413

MICROFILMED MICROFILMED

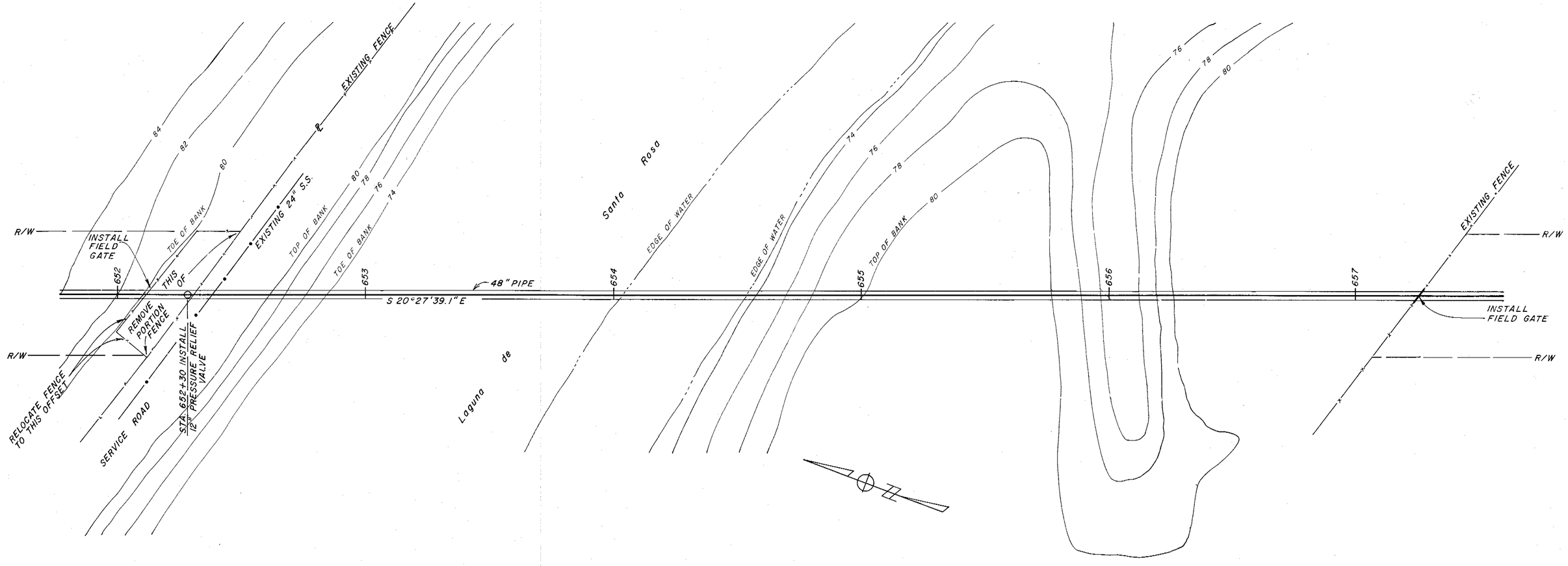

HEAD in ft.	320	340	320
SPECIAL		WELD JOINTS	
PIPE SIZE & TYPE	48"	48"	
BEDDING/BACKFILL	a/B	b/BACKFILL COMPACTED TO 85%	

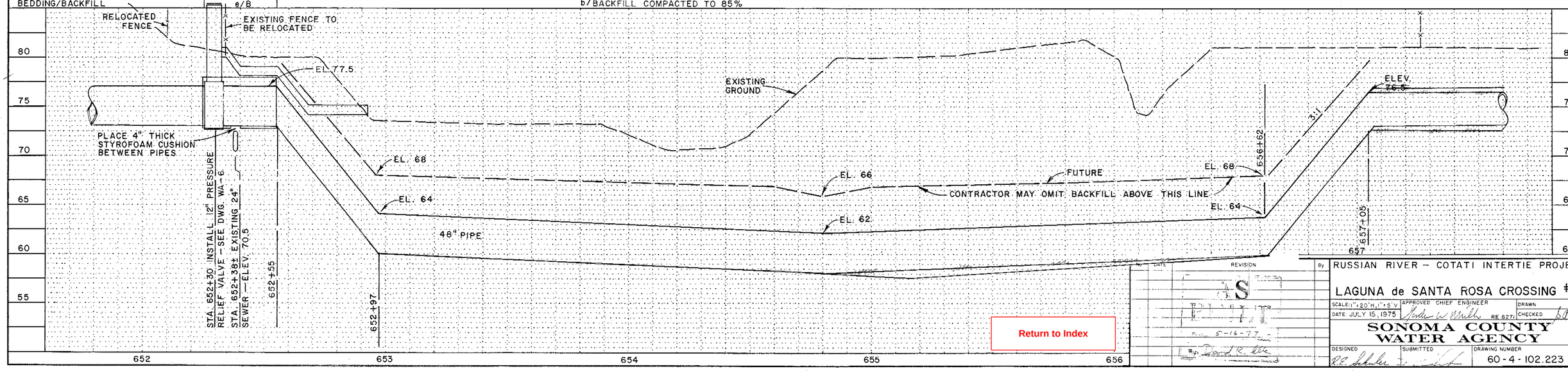

Return to Index

DATE	REVISION	By
5-16-77		

RUSSIAN RIVER – COTATI INTERTIE PROJECT

LAGUNA de SANTA ROSA CROSSING #2

SCALE: 1"=20'H, 1"=5'V | APPROVED CHIEF ENGINEER | DRAWN

DATE JULY 15, 1975 | RE 827 | CHECKED

SONOMA COUNTY WATER AGENCY

DESIGNED | SUBMITTED | DRAWING NUMBER

60-4-102.223

SHEET NO. 23

STA. 787+90 INSTALL 2" AIR VALVE TYPE B

STA. 789+60 INSTALL 6" BLOWOFF TYPE A

Washoe

EXISTING BRIDGE TO BE REMOVED

R/W

S 50°22'32.2"E

48" PIPE

SEE NOTE

25' TEMPORARY CONSTRUCTION EASEMENT

Creek

NOTE:
CONTRACTOR MAY EXCAVATE, AT HIS OPTION, A PERMANENT CROSSING FOR HIS CONVENIENCE PROVIDED THE EXCAVATION OF SLOPES IS AS FLAT AS POSSIBLE AND DOES NOT EXTEND BEYOND THE RIGHT OF WAY LIMITS

HEAD in ft.		
SPECIAL	WELD JOINTS	WELD JOINTS
PIPE SIZE & TYPE	48"	48"

BEDDING/BACKFILL

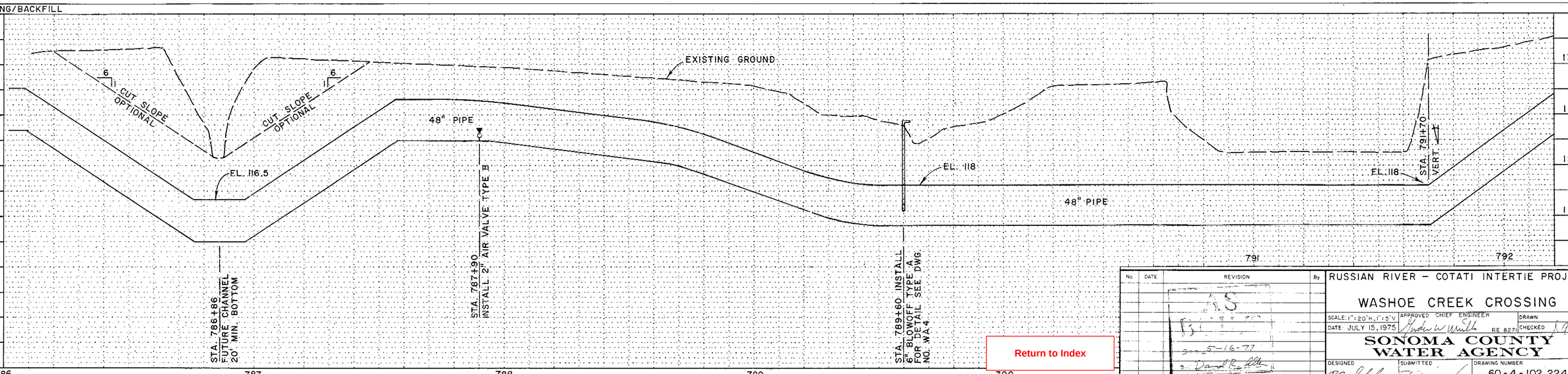

Return to Index

No.	DATE	REVISION	By
		5-16-77	

RUSSIAN RIVER – COTATI INTERTIE PROJECT

WASHOE CREEK CROSSING

SCALE: 1"=20'H, 1"=5'V | APPROVED CHIEF ENGINEER | DRAWN

DATE: JULY 15, 1975 | RE 827 | CHECKED

SONOMA COUNTY WATER AGENCY

DESIGNED R.E. Schuler | SUBMITTED | DRAWING NUMBER 60-4-102.224

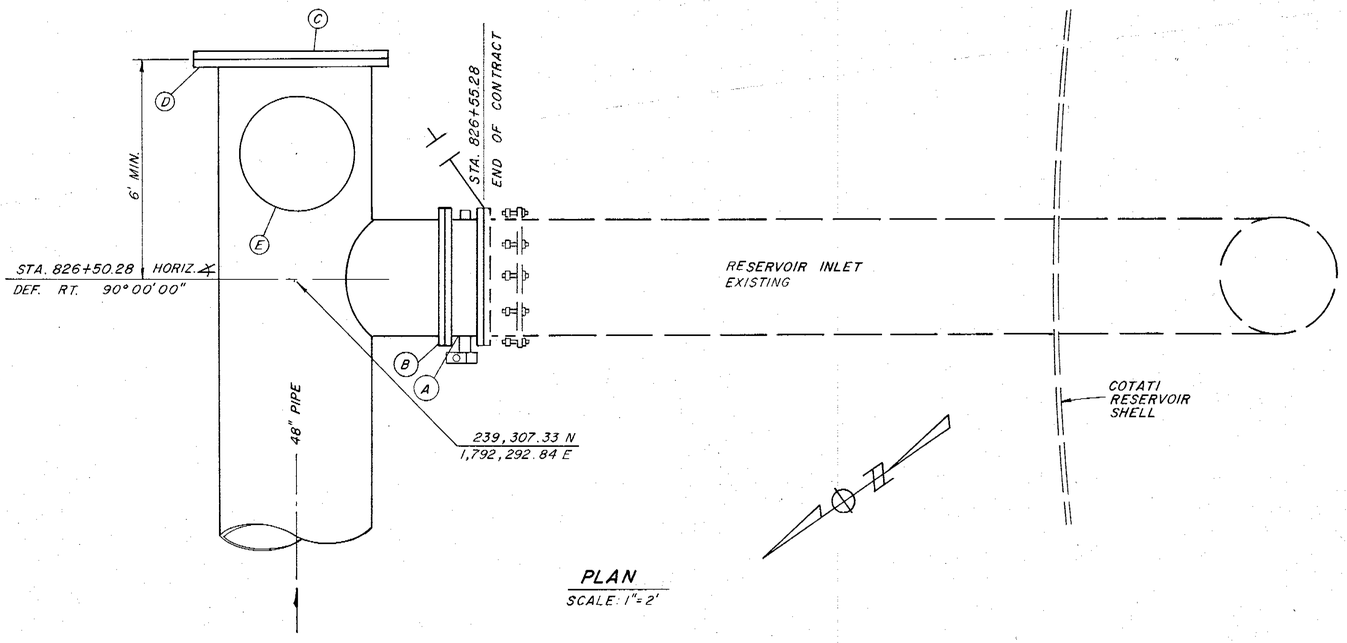

PLAN
SCALE: 1"=2'

NO.	ITEM
A	36" BUTTERFLY VALVE WITH OPERATOR, FLANGED, RUBBER SEAT, SHORT BODY
B	36" S.O. FLANGE
C	48" BLIND FLANGE
D	48" S.O. FLANGE
E	4" AIR VALVE ASSEMBLY, TYPE A
F	TRAFFIC VALVE BOX WITH CAST IRON COVER. BROOKS 3RT 8" ACP OR 12" BROOKS EXTENSIONS, OR A.E.

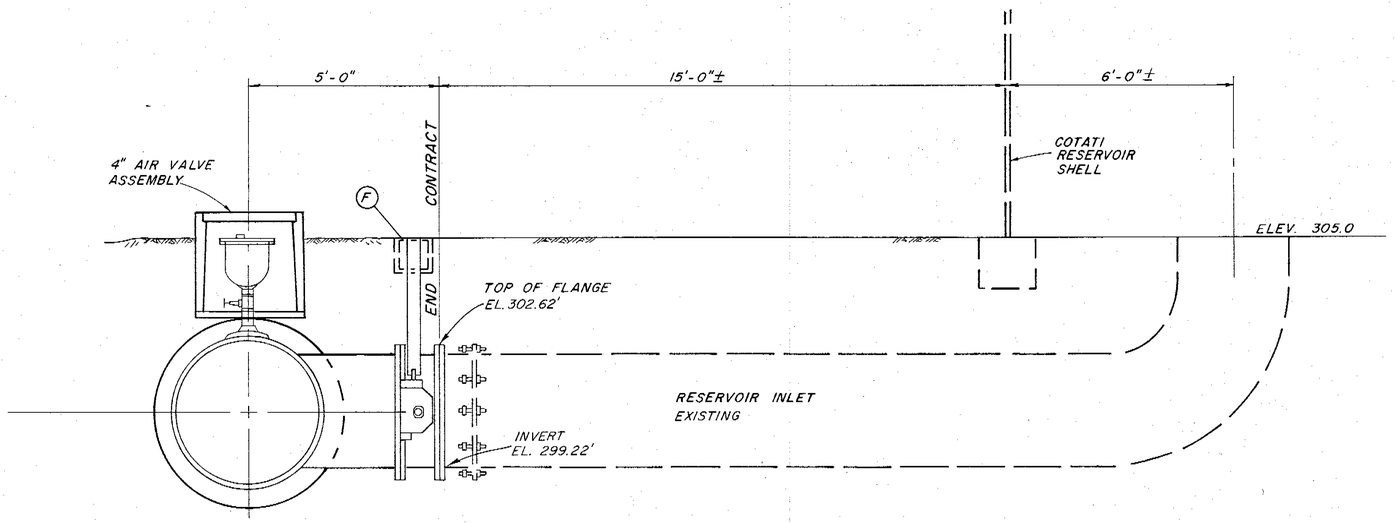

ELEVATION
SCALE: 1"=2'

Return to Index

No.	DATE	REVISION	By
		5-16-77	
		Da JR. Ala	

RUSSIAN RIVER – COTATI INTERTIE PROJECT
COTATI RESERVOIR CONNECTION

SCALE: AS SHOWN	APPROVED CHIEF ENGINEER	DRAWN
DATE: JULY 15, 1975	Godwin W. Smith RE 8271	CHECKED DD

SONOMA COUNTY WATER AGENCY

DESIGNED	SUBMITTED	DRAWING NUMBER
R.E. Schuler		60-4-102.225

SHEET NO. 25

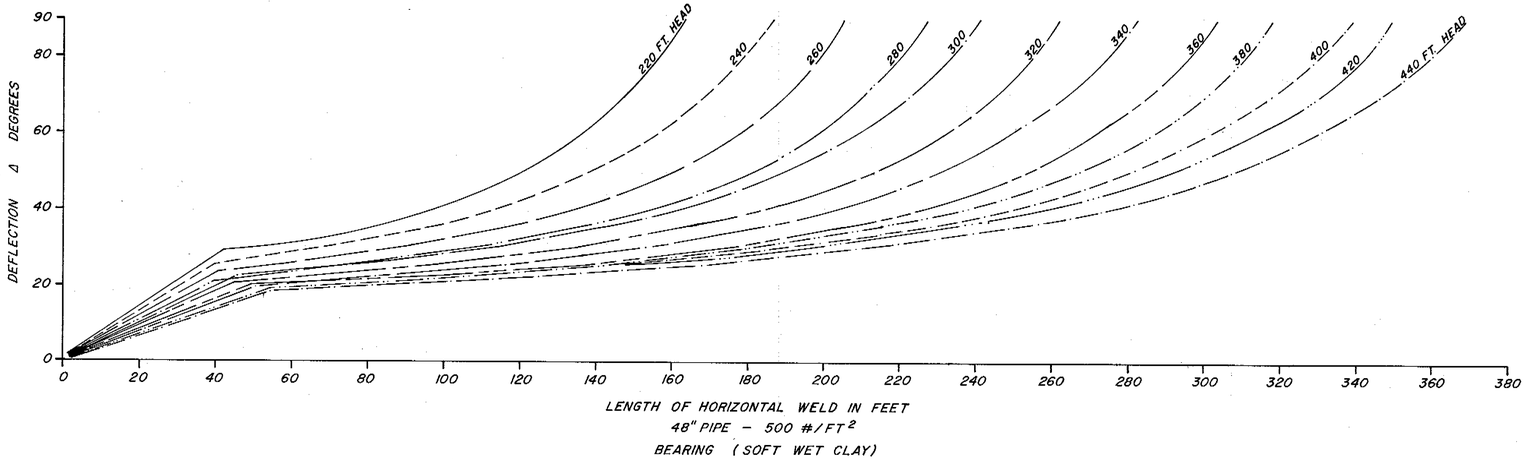

IN LAGUNA de SANTA ROSA
STA. 652+00 TO 658+00

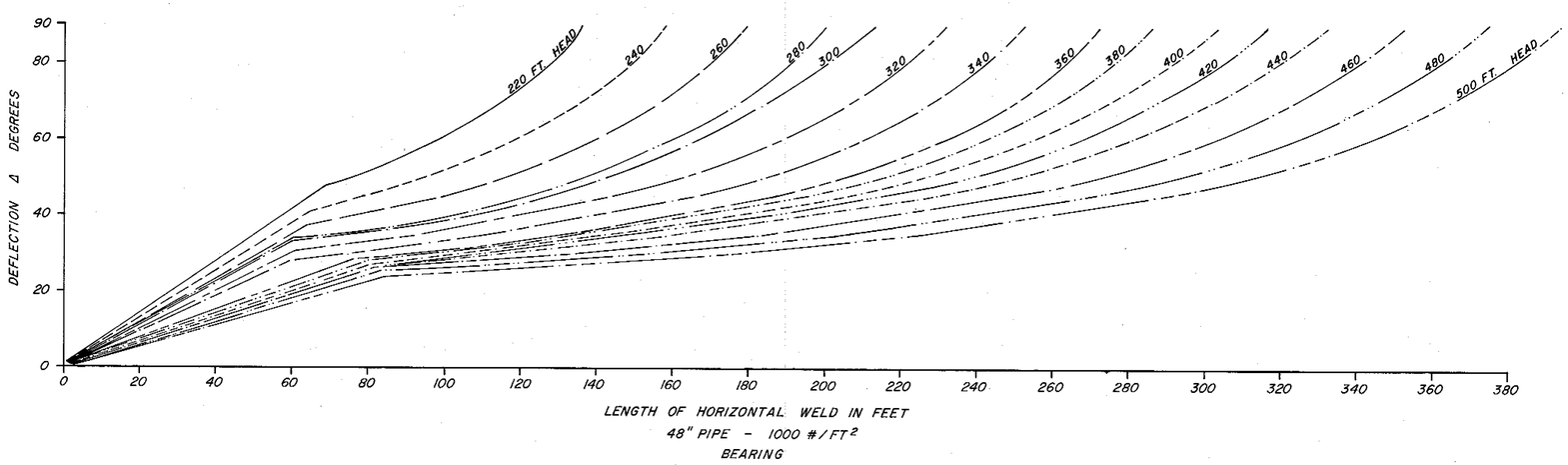

GENERAL

NOTES

1. ALL HORIZONTAL AND VERTICAL BENDS GREATER THAN 5° SHALL BE TREATED AS TENSION JOINTS AND SHALL BE WELDED IN EACH DIRECTION FROM P.I. FOR THE DISTANCE DENOTED ON THIS DRAWING.
2. ALL WELDED JOINTS SHALL HAVE FULL FILLET WELDS.

Return to Index

No.	DATE	REVISION	By
		AS BUILT 5-16-77	

RUSSIAN RIVER-COTATI INTERTIE PROJECT
WELD LENGTH FOR THRUST ON PIPE BENDS

SCALE: NONE
DATE: JULY 15, 1975
APPROVED CHIEF ENGINEER: Gordon W. Mills RE 8271
DRAWN
CHECKED

SONOMA COUNTY WATER AGENCY

DESIGNED: K. C. Schuler
SUBMITTED
DRAWING NUMBER: 60-4-102.226

STRIP SITE FOR PIPELINE BEDDING MATERIAL - SEE DWG. NO.

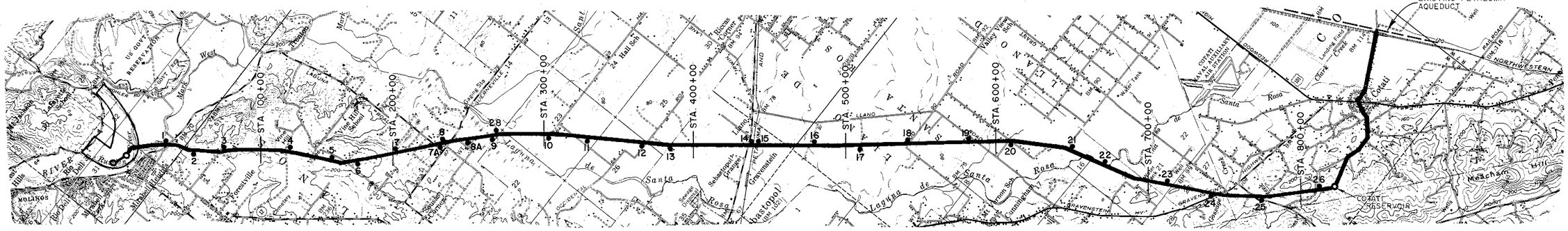

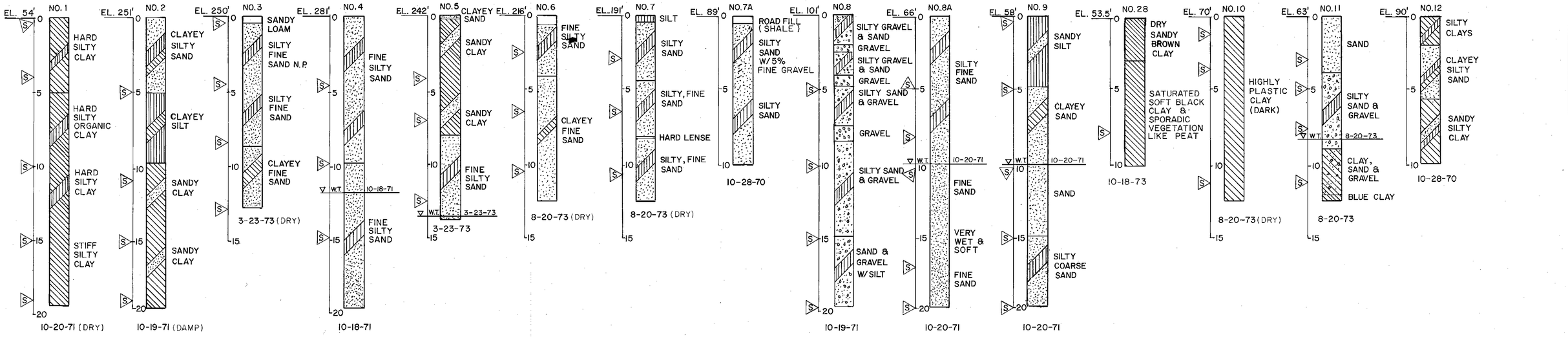

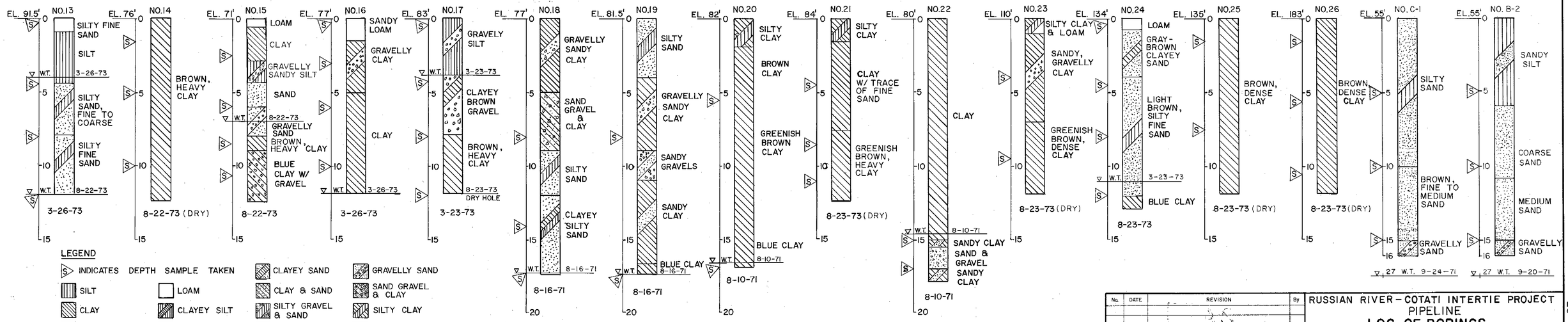

LEGEND

- S INDICATES DEPTH SAMPLE TAKEN
- SILT
- CLAY
- SAND
- GRAVEL
- LOAM
- CLAYEY SILT
- SANDY SILT
- SANDY CLAY
- CLAYEY SAND
- CLAY & SAND
- SILTY GRAVEL & SAND
- CLAYEY GRAVEL
- GRAVELLY CLAY
- GRAVELLY SAND
- SAND GRAVEL & CLAY
- SILTY CLAY
- SILTY SAND

NOTE: SAMPLES TAKEN BY POWER FLIGHT AUGER AND CLASSIFIED BY OBSERVATION EXCEPT HOLES NO. 3, 4, 5, 7A & 12 WHICH WERE CLASSIFIED BY LABORATORY GRADATION ANALYSIS. SAMPLES FROM C-1 & B-1 WERE TAKEN BY SPLIT SPOON SAMPLER, AND CLASSIFIED BY FIELD OBSERVATION. HOLE 28 EXCAVATED BY BACKHOE.

Return to Index

No.	DATE	REVISION	By

RUSSIAN RIVER - COTATI INTERTIE PROJECT
PIPELINE
LOG OF BORINGS

SCALE: NO SCALE | APPROVED CHIEF ENGINEER | DRAWN
DATE: JULY 15, 1975 | RE 8271 | CHECKED

SONOMA COUNTY WATER AGENCY

DESIGNED | SUBMITTED | DRAWING NUMBER
60 - 4 - 102.227

SHEET NO. 27

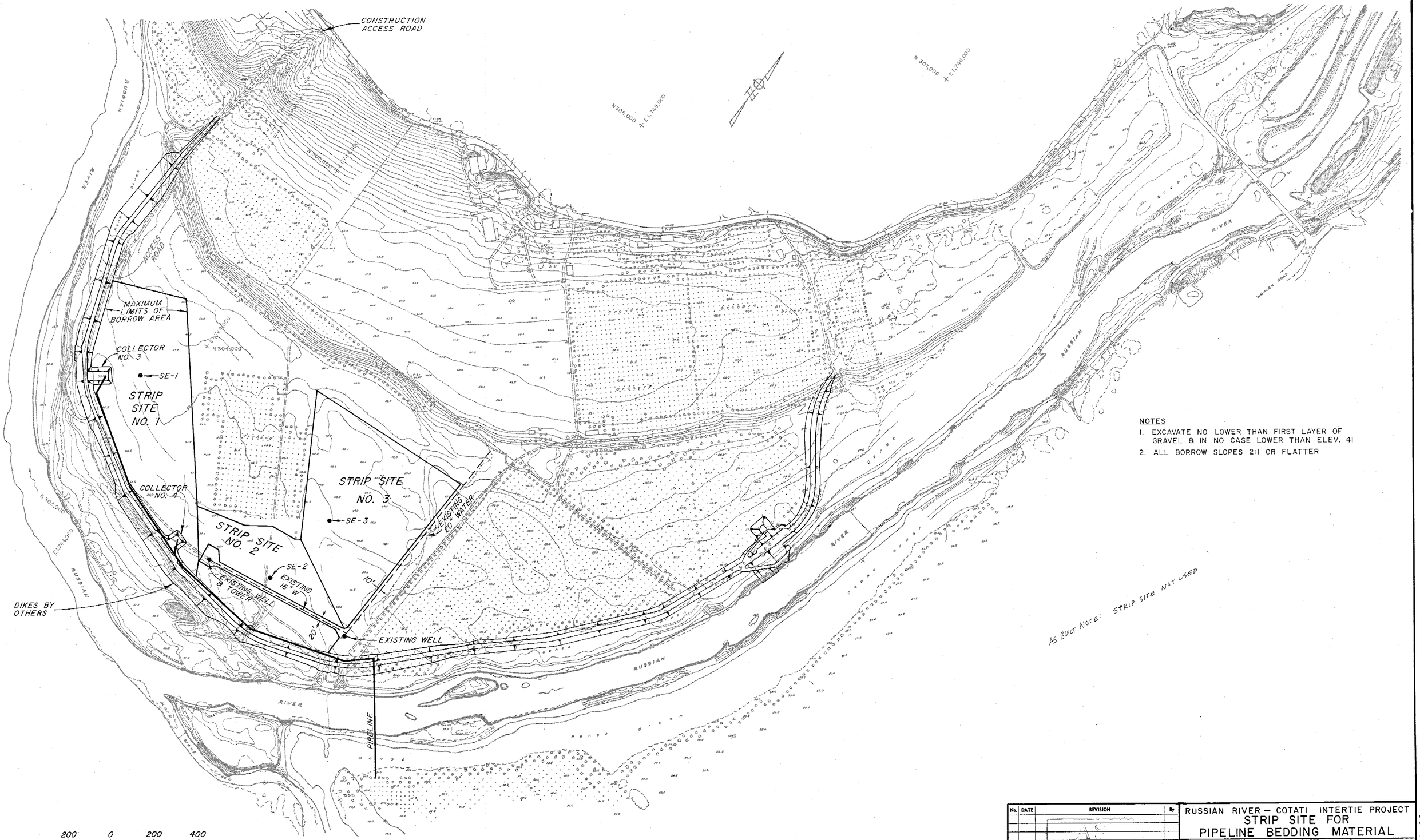

NOTES

1. EXCAVATE NO LOWER THAN FIRST LAYER OF GRAVEL & IN NO CASE LOWER THAN ELEV. 41
2. ALL BORROW SLOPES 2:1 OR FLATTER

AS BUILT NOTE: STRIP SITE NOT USED

No.	DATE	REVISION	By
		AS BUILT 5-16-77 David R. Gifford	

RUSSIAN RIVER – COTATI INTERTIE PROJECT
STRIP SITE FOR
PIPELINE BEDDING MATERIAL

SCALE: 1" = 200'
DATE: JULY 15, 1975
APPROVED CHIEF ENGINEER Gordon W. Muller RE 8271
DRAWN
CHECKED

SONOMA COUNTY WATER AGENCY

DESIGNED R.E. Schuler
SUBMITTED
DRAWING NUMBER 60-4-102.228

Return to Index

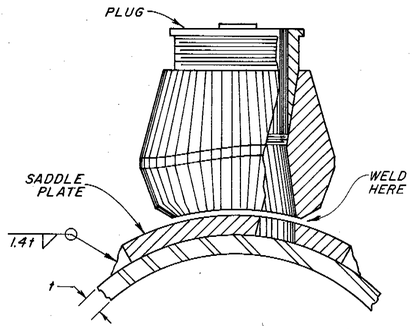

THREDOLET
NO SCALE

NOTE: PLACE THREDOLET BELOW TOP OF PIPE BUT ABOVE SPRINGLINE.

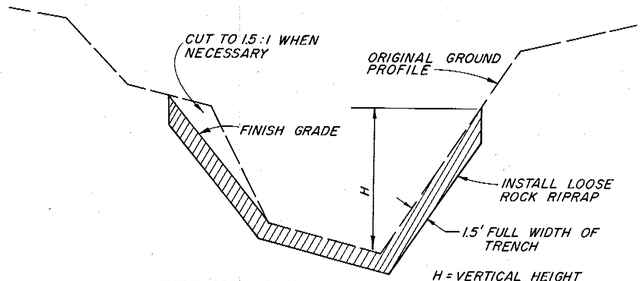

STATIONS	H
743+10	2'
753+55	7'
786+86	6'
791+00	7'

FINISH GRADE SHALL FOLLOW EXISTING GROUND PROFILE EXCEPT SHALL NOT EXCEED 1.5 HORIZONTAL TO 1.0 VERTICAL.
INSTALL RIPRAP AT STATIONS SHOWN IN TABLE.

LOOSE ROCK RIPRAP
NO SCALE

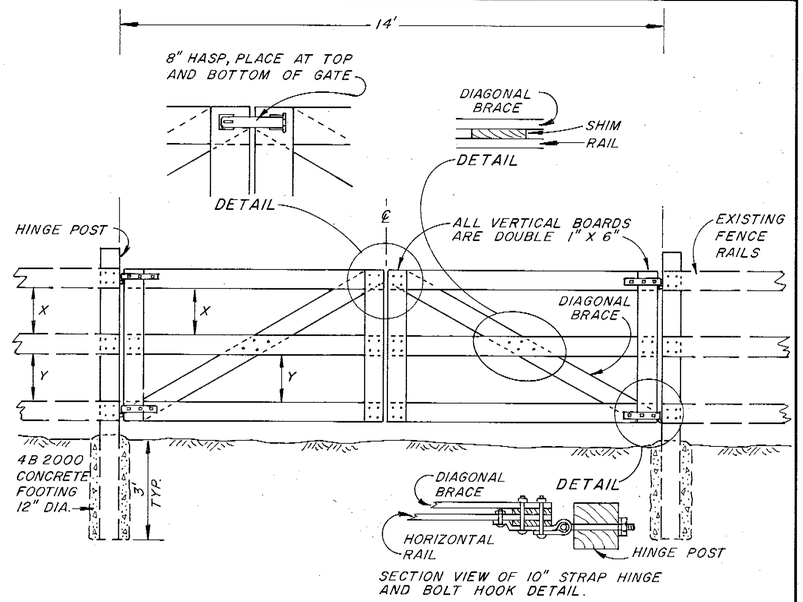

SECTION VIEW OF 10" STRAP HINGE AND BOLT HOOK DETAIL.

NOTES
1. GATE FRAME SHALL BE 1" X 6", DOUGLAS FIR, S4S.
2. GATE HINGE POST SHALL BE 6" X 6" X 8" REDWOOD ALL HEART.
3. ALL WOOD SHALL BE PAINTED WHITE.

DOUBLE WOOD GATE
NO SCALE

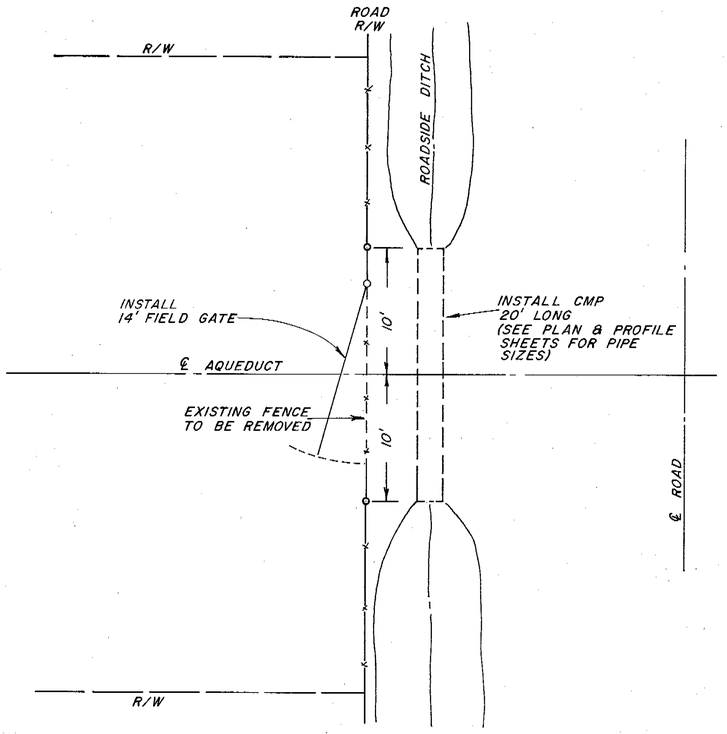

PLAN
GATE & CMP LOCATION
SCALE 1" = 6'

CC 18

BLACK ON ORANGE
72" x 72" 8" LETTERS

CC 16

BLACK ON ORANGE
48" x 48" 7" LETTERS

CC 9

BLACK ON ORANGE
48" x 48" 7" LETTERS

NOTE:
ALL SIGNS SHALL MEET STATE OF CALIF. STANDARDS, MOUNTED ON POSTS, AND PLACED ON EDGE OF ROAD AT THE DISTANCES SHOWN IN ( ) FROM TRENCH.

SANFORD ROAD - CC 18 (700'±) CC 16 (500'±) CC 9 (200'±)
OCCIDENTAL ROAD - CC 18 (700'±) CC 16 (500'±) CC 9 (200'±)
SEBASTOPOL ROAD - JACKED
TODD ROAD - CC 18 (700'±) CC 16 (500'±) CC 9 (200'±)
LLANO ROAD - CC 18 (700'±) CC 16 (500'±) CC 9 (200'±)
MEADOW LANE - CC 18 BOTH SIDES OF TRENCH
WALKER AVE. - CC 18 BOTH SIDES OF TRENCH
GRAVENSTEIN HWY. - JACKED
STONY POINT ROAD - EXISTING CASING
MADRONE ROAD - CC 18 (700'±) CC 16 (500'±) CC 9 (200'±) CC 18 ONLY, WEST SIDE
WEST SIERRA AVE. - CC 18 (700'±) CC 16 (500'±) CC 9 (200'±)

BASIC SIGNING
FOR
OUTSIDE PROJECT LIMITS

Return to Index

No.	DATE	REVISION	By
		AS BUILT Date 5-16-77 By:	

RUSSIAN RIVER – COTATI INTERTIE PROJECT

MISCELLANEOUS DETAILS

SCALE: AS SHOWN
DATE: JULY 15, 1975
APPROVED CHIEF ENGINEER RE 8271
DRAWN
CHECKED

SONOMA COUNTY WATER AGENCY

DESIGNED
SUBMITTED
DRAWING NUMBER 60-4-102.229

SHEET NO. 29

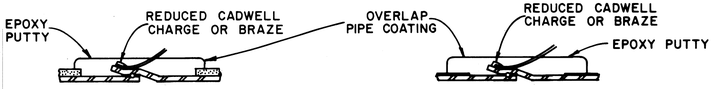

MORTAR COATED STEEL PIPE

COAL TAR COATED STEEL PIPE

CONNECTION DETAILS

ALTERNATE TO CALDWELL PROCESS: CONNECT ANODE LEAD TO BONDING ROD WITH PENN UNION S-2 SPLIT BOLT CONNECTORS.

NOTES - CONNECTION DETAILS

1. WHERE POSSIBLE, SHIFT CONNECTION TO NEAREST PIPE JOINT. ALLOW 12" LOOP AS SLACK AT PIPE CONNECTION.
2. MIX EPOXY PUTTY (EPOXYBOND PLUMBER SEAL) AS DIRECTED & APPLY FIRMLY TO PROVIDE A WATER-TIGHT SEAL AT LEAST 1/4" THICK OVER PIPE COATING. OVERLAP COATING & WIRE INSULATION BY 1/2"

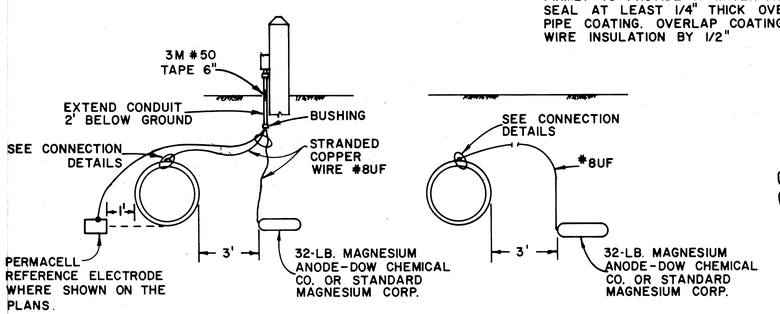

TYPE A GALVANIC ANODE WITH ELECTROLYSIS TEST LEAD INSTALLATION

NOTES -
1. CLEARANCE SHALL NOT BE LESS THAN 3'.
2. TERMINATE LEADS IN CONDUIT TEST OUTLET.
3. ANODE IS TO BE INSTALLED HORIZONTALLY AND SHALL BE LEVEL WITH THE INVERT OF THE PIPE.

TYPE B GALVANIC ANODE WITHOUT TEST LEAD INSTALLATION

NOTES -
1. ALTERNATE CONNECTION IN RESTRICTED SURFACE ACCESS CONDITIONS

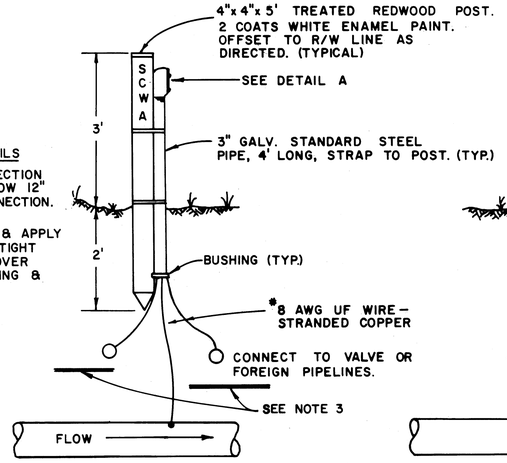

ONE POINT STATION TYPE A

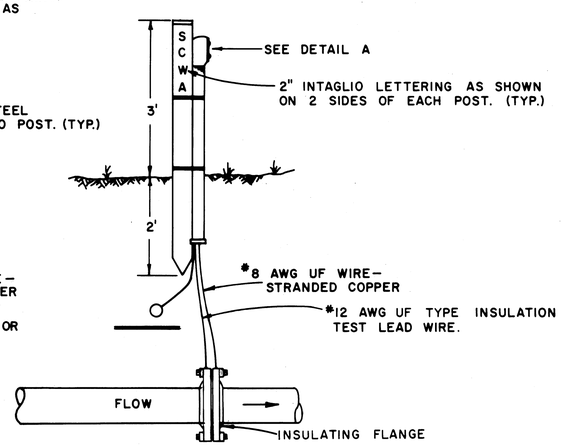

TWO POINT STATION TYPE A

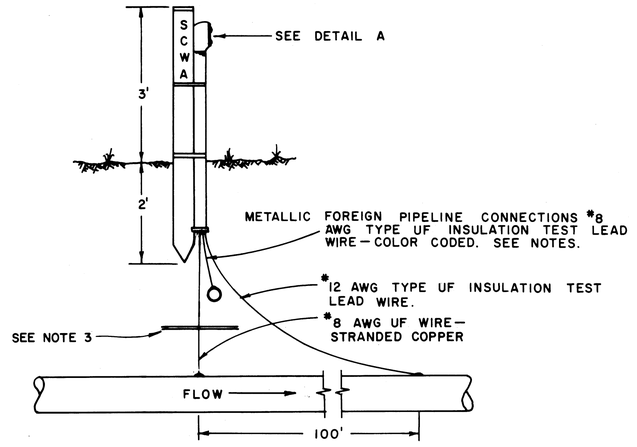

THREE POINT STATION TYPE A

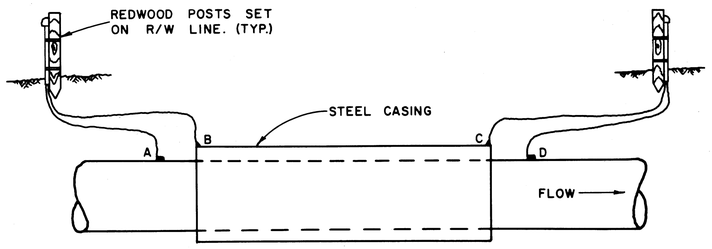

ENCASEMENT STATION

NOTE 1. A AND B - #12 AWG TYPE UF INSULATION TEST LEAD WIRE STRANDED COPPER.
2. C AND D - #8 AWG UF WIRE STRANDED COPPER
3. ENCASEMENT LEADS - YELLOW.

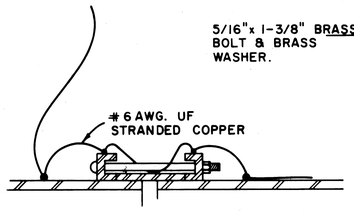

COUPLING BOND

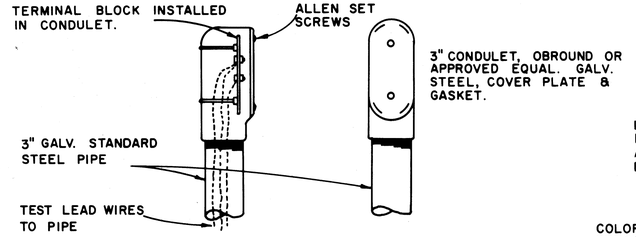

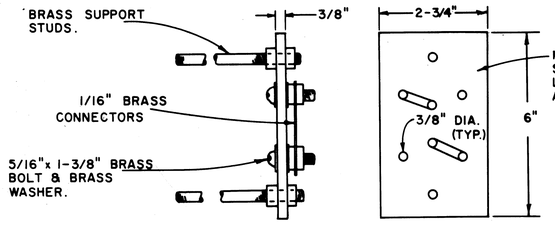

DETAIL A

NOTE: TEST STATION UNIT SHALL BE INSTALLED COMPLETE WITH MICARTA TERMINAL BLOCK, BRASS HARDWARE, CONDULET, COVER & RUBBER GASKET.

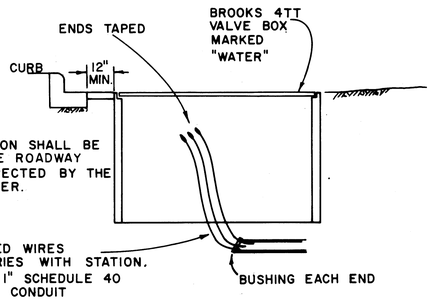

STREET INSTALLATION

NOTES:

1. COLOR CODE:

AQUEDUCT PIPELINE
WHITE - DOWNSTREAM
YELLOW - MIDPOINT OR ANODE
BLACK - UPSTREAM

FOREIGN PIPELINE CROSSINGS
BLUE - GAS
GREEN - WATER
RED - SEWER PRESSURE MAIN
ORANGE - UNIDENTIFIED PIPELINE

TERMINAL POST WASHERS
SHALL BE PAINTED SAME COLOR AS LEAD WIRES.

2. LEAD WIRES
LENGTH AND SIZE OF EACH WIRE SHALL BE MEASURED AND STAMPED ON A METAL TAG AFFIXED TO THE WIRE TERMINAL POST. WHERE UF WIRE IS NOT AVAILABLE IN COLORS, COLOR CODE SHALL BE INDICATED BY COLOR TAPE AT TERMINALS.

3. ~~WHEN~~ CLEARANCE BETWEEN FOREIGN PIPELINE IS LESS THAN 12", ~~INSERT SQUARE~~ SHEET OF ~~LAMINATED~~ PHENOLIC PLASTIC 1/4" ~~THICK~~ WITH LENGTHS EQUAL TO THE O.D. OF THE LARGER ~~PIPE OR 18" WHICH EVER IS LARGER~~, INSTALL 32 LB. ~~MAGNESIUM ANODE~~ EACH SIDE OF AGENCY PIPELINE PER STREET INSTALLATION ~~DETAIL~~. NOT REQUIRED

4. NO TEST LEAD CONNECTIONS SHALL BE MADE TO METALLIC FOREIGN PIPELINES. DRAPE 3' OF EXTRA CABLE AT POINT OF CROSSING FOR CONNECTION BY OTHERS.

5. GALVANIC ANODE TYPE-A TO BE INSTALLED AT 2,000' INTERVALS.

Contract 2

Return to Index

No.	DATE	REVISION	By
		AS BUILT Date 5-16-77 By:	

RUSSIAN RIVER COTATI INTERTIE PROJECT
GALVANIC ANODES AND ELECTROLYSIS TEST STATIONS

SCALE: NONE	APPROVED CHIEF ENGINEER	DRAWN
DATE: JULY 15, 1975	Gordon W. Schultz R.E. 8271	CHECKED
SONOMA COUNTY WATER AGENCY		
DESIGNED	SUBMITTED	DRAWING NUMBER
		WA-1

SHEET NO. 30 PH27-48

MICROFILMED

MICROFILMED

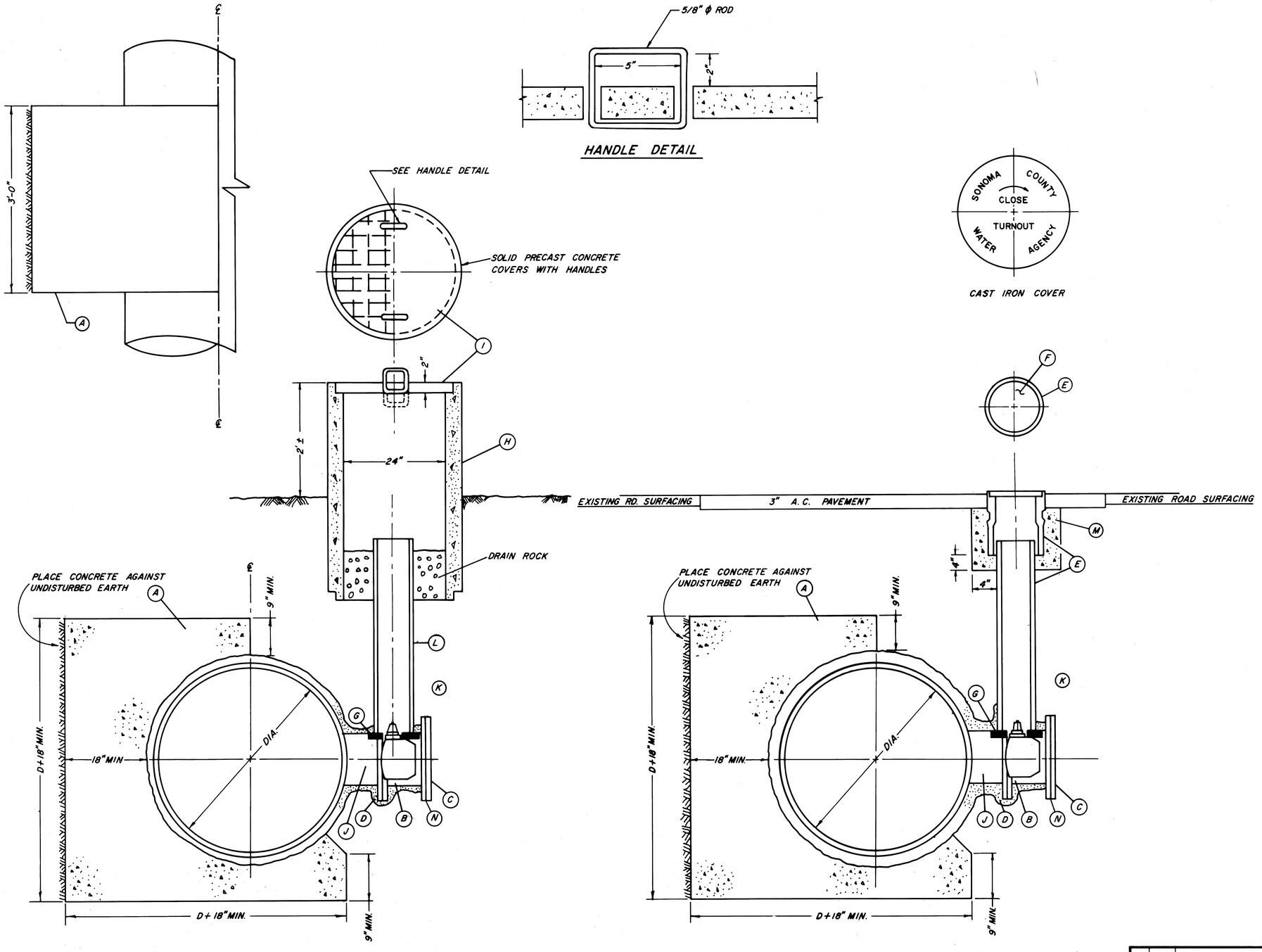

TURNOUT TYPE A

IN AGENCY RIGHT OF WAY

CAST IRON COVER

TURNOUT TYPE B

IN ROADWAYS

DISCRIPTIONS

A	CONCRETE THRUST BLOCK- CLASS 4B2000 - PLAIN CONCRETE
B	BUTTERFLY VALVE W/ OPERATOR, FLANGED, RUBBER SEAT, SHORT BODY.
C	BLIND FLANGE, PAINT FLANGE AND BOLTS AFTER INSTALLATION WITH COAL TAR EPOXY.
D	PAINT SURFACE WITH BITUMASTIC NO. 50, WRAP WITH 18 GAUGE STUCCO NETTING AND PLASTER WITH 1:3 MIX 1 1/2" THICK.
E	TRAFFIC VALVE BOX W/ CAST IRON COVER BROOKS 3RT 8" ACP OR 12" BROOKS EXTENSIONS, BROOKS PRODUCTS INC. OR APPROVED EQUAL.
F	CAST IRON COVER BROOKS 3RT WITH PRINTING AS SHOWN.
G	DOUBLE 2"X6"X12" REDWOOD BLOCKING NOTCHED TO RECEIVE VALVE STEM. PRECAST CONCRETE BASE 12"X12"X1 1/2" MAY BE SUBSTITUTED.
H	CONCRETE IRRIGATION PIPE 24"X4'0" GROOVE END UP FOR LID.
I	CONCRETE PRECAST LID WITH TWO HANDLES 5/8" Ø REINFORCED WITH 6"X6"X10GA. MESH WITH 1/4" Ø ROD AROUND LID EDGE. PRINTING AS SHOWN.
J	TURNOUT TEE TO BE FABRICATED BY PIPE MANUFACTURER. LOCATE 8" MIN. FROM RUBBER GASKET JOINT. COATING SAME AS PIPELINE COATING.
K	SAND BACKFILL TO 12" OVER TOP OF VALVE. CONTINUE BACKFILL AND COMPACTION AS REQUIRED FOR LOCATION
L	8" ACP OR 12" BROOKS EXTENSIONS OR APPROVED EQUAL.
M	CONCRETE PAD CLASS 4B 2000
N	2-POINT TEST STATION REQUIRED WITH INSULATION GASKET. NOT REQUIRED FOR BLIND FLANGE INSTALLATIONS.

NOTES:

1. PRESSURE RATINGS OF EQUIPMENT SHOWN SHALL BE NO LESS THAN THE WORKING PRESSURE (IN FEET OF HEAD) INDICATED ON THE PROFILE DRAWINGS.

Return to Index

contract 2

No.	Date	REVISION	By
		AS BUILT Date 5-16-77 By: David R. [illegible]	

RUSSIAN RIVER—COTATI INTERTIE PROJECT

DISTRIBUTION TURNOUTS TYPE A AND TYPE B

SCALE: NONE | APPROVED CHIEF ENGINEER | DRAWN

DATE: JULY 15, 1975 | R.E. 8271 | CHECKED

SONOMA COUNTY WATER AGENCY

DESIGNED R.E. Schuler | SUBMITTED | DRAWING NUMBER WA-2

PH 27-4B

SHEET NO. 31

MICROFILMED

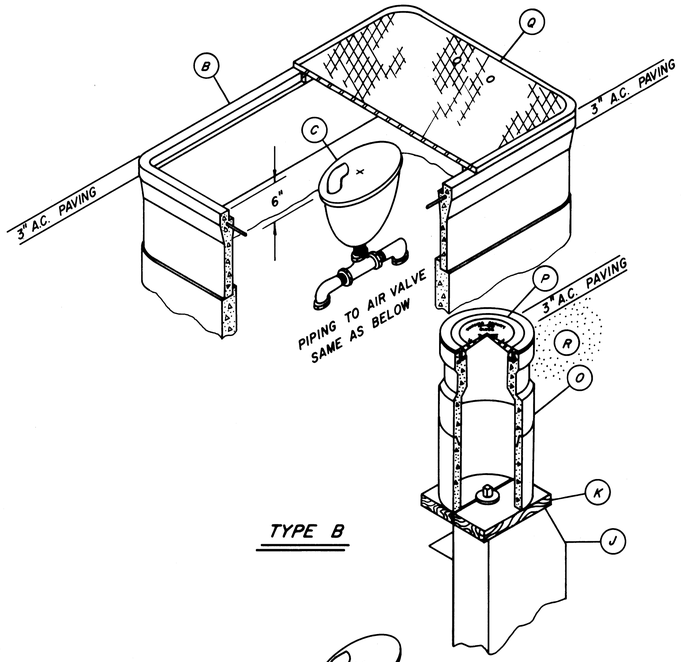

TYPE B

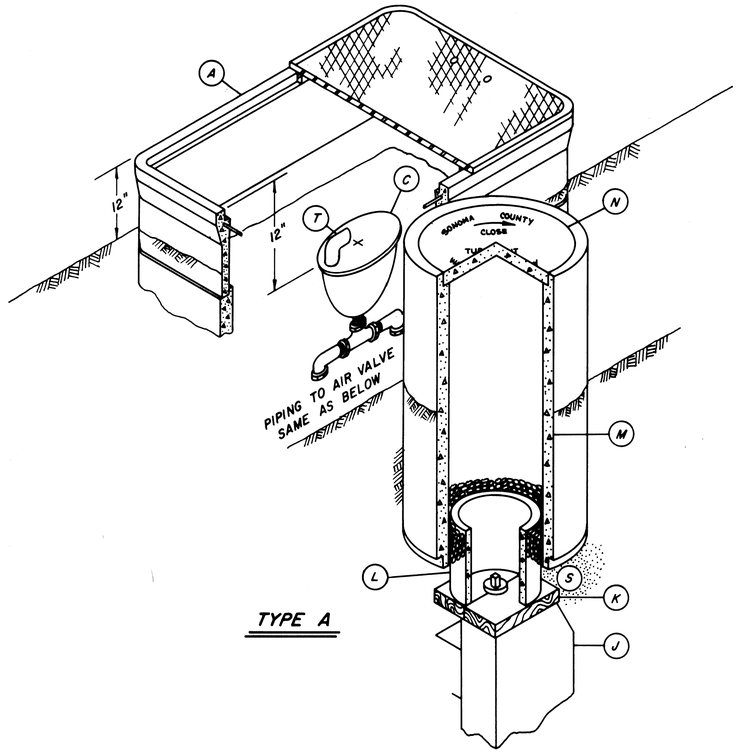

TYPE A

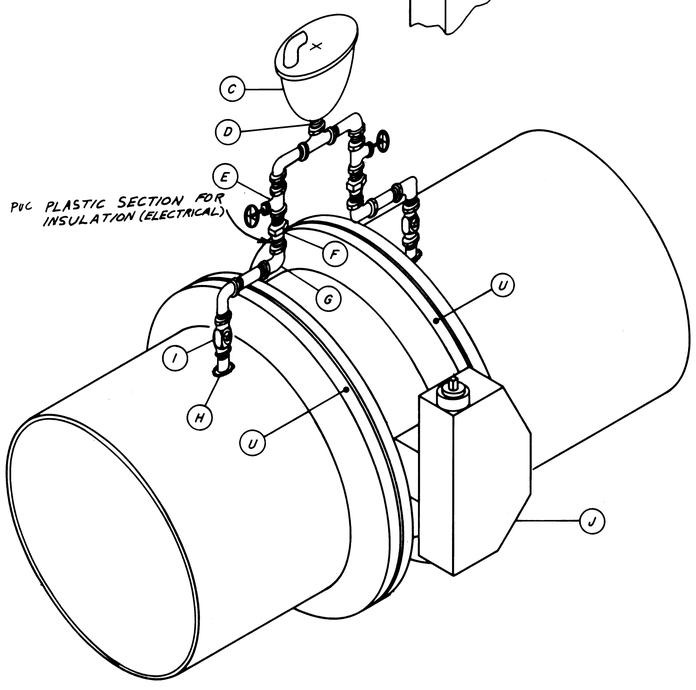

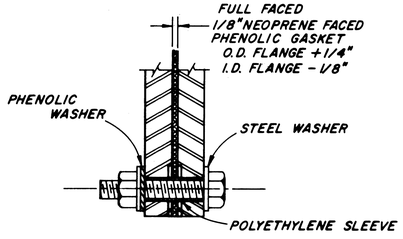

DETAIL
INSULATED FLANGE JOINT
INSTALL AT ONE FLANGE ONLY
(INSTALL INSULATED GASKET SET ONLY WHEN CALLED FOR ON PLAN & PROFILE)

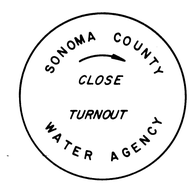

DETAIL FOR WORDING OF CONCRETE & IRON LIDS

A	METER BOX SERIES 68 BROOKS OR A.E., STACKED WITH NON-TRAFFIC LID WITH SIX 3/4" VENT HOLES EQUALLY SPACED USE REDWOOD OR CONCRETE SUPPORT BLOCKS (2-2"x6"x24")
B	METER BOX SERIES 68 BROOKS OR A.E., STACKED WITH TRAFFIC LID. USE REDWOOD OR CONCRETE SUPPORT BLOCKS (2-2"x6"x24")
C	2" AIR VALVE
D	2" CLOSE NIPPLE
E	2" BRONZE GATE VALVE CRANE NO. 472 OR A.E.
F	2" UNION COUPLING
G	2" GALVANIZED ELBOW
H	2" THREDOLET BY PIPE MANUFACTURER
I	2" CORPORATION STOP, BRONZE BODY CRANE NO.320 OR A.E.
J	MAIN LINE BUTTERFLY VALVE WITH OPERATOR, FLANGED, RUBBER SEAT, SHORT BODY.
K	DOUBLE 2"x6"x12" REDWOOD BLOCKING NOTCHED TO RECEIVE VALVE STEM. PRECAST CONCRETE PADS 12"x12"x1 1/2", MAY BE SUBSTITUTED.
L	8" ACP OR 12" BROOKS EXTENSIONS OR A.E.
M	CONCRETE IRRIGATION PIPE 24"x4'-0" GROOVE END UP FOR LID.
N	CONCRETE PRECAST LID OF ASBESTOS CEMENT WITH 2 HANDLES 5/8" Ø REINFORCED WITH 6"x6"x10" Ga. MESH WITH 1/4" Ø ROD AROUND LID EDGE.
O	TRAFFIC VALVE BOX WITH CAST IRON COVER BROOKS 3 RT 8" ACP OR 12" BROOKS EXTENSIONS, BROOKS PRODUCTS INC. OR A.E.
P	CAST IRON COVER BROOKS 3 RT WITH PRINTING AS SHOWN.
Q	TRAFFIC LID WITH SIX 3/4" DIA. HOLES EQUALLY SPACED
R	SAND BACKFILL TO MEET SPECIFICATIONS
S	SAND BACKFILL TO 12" OVER TOP OF VALVE. CONTINUE BACKFILL AND COMPACTION AS REQUIRED FOR LOCATION.
T	2" 90° GALVANIZED ELBOW
U	2-POINT TEST STATION PER DWG. WA-1

NOTES

1. PRESSURE RATINGS OF EQUIPMENT SHOWN SHALL BE NO LESS THAN THE WORKING PRESSURE (IN FEET OF HEAD) INDICATED ON THE PROFILE DRAWINGS.
2. ALL 2" PIPING & FITTINGS SHALL BE GALVANIZED, SCHEDULE 80, UNLESS OTHERWISE SHOWN.

Return to Index

Contract 2

No.	DATE	REVISION	By
		AS BUILT Date 5-16-77 By: [signature]	

RUSSIAN RIVER – COTATI INTERTIE PROJECT
MAIN LINE VALVE TYPE A & B

SCALE: NO SCALE
DATE: JULY 15, 1975
APPROVED CHIEF ENGINEER [signature] RE 8271
DRAWN
CHECKED [signature]

SONOMA COUNTY WATER AGENCY

DESIGNED R.E. Schuler
SUBMITTED [signature]
DRAWING NUMBER WA-3

MICROFILMED

Cont 12

PH 27-4B

SHEET NO. 32

	DESCRIPTION
A	BUTTERFLY VALVE W/ OPERATOR CLASS 150 MIN. FLANGED RUBBER SEAT, SHORT BODY.
B	OPERATOR MUST MEET 150% OF NORMAL DESIGN TORQUE REQUIREMENTS
C	SAND BACKFILL
D	TRAFFIC VALVE BOX W/ CAST IRON COVER, USE 12" EXTENSIONS OR 8" A.C.P. CUT TO SIZE. BROOKS 3RT AND EXTENSIONS. BROOKS PRODUCTS INC. OR APPROVED EQUAL.
E	CAST IRON COVER – CASTING TO READ AS SHOWN – 3RT BROOKS PRODUCTS INC.
F	DOUBLE 2"X6"X12" REDWOOD BLOCKING NOTCHED TO RECEIVE VALVE STEM. PRECAST CONCRETE PIERS 12"X12"X11 1/2" MAY BE SUBSTITUTED.
G	CONCRETE IRRIGATION PIPE 24"X 4'0" GROOVE END UP FOR LID.
H	CONCRETE PRECAST LID WITH 2 HANDLES 5/8" / REINFORCED WITH 6"x6"x10Ga. MESH WITH 1/4" / ROD AROUND LID EDGE. CASTING TO READ AS SHOWN.
I	TURNOUT NOZZLE W/ WELDED 90° ELBOW TO BE FABRICATED BY PIPE MANUFACTURER.
J	TURNOUT NOZZLE W/ FLANGE SAME AS MAIN LINE PIPING FABRICATED BY PIPE MANUFACTURER.
K	WELDED 90° ELBOW CLASS EQUAL TO MAIN LINE PRESSURE.
L	STEEL PIPE SCHEDULE 40. LENGTH AS NEEDED.
M	1/2 CU. YD. DRAIN ROCK.
N	2" STD. MALLEABLE IRON CLOSE NIPPLE, 45° ELBOW AND CAP.
O	CONCRETE WATER METER BOX, BROOKS 36 SERIES, W/TRAFFIC COVER.
P	FLANGED COUPLING ADAPTER SMITH BLAIR 913 OR APPROVED EQUAL.
Q	JOINT HARNESS PER AWWA STEEL MANUAL M-11 1964 CHAPTER 19.
R	CONCRETE ANCHOR BLOCK MIN. SIZE 2'x 3'x 3'
S	CONCRETE PAD CLASS 5B 2500
T	LOOSE ROCK RIPRAP 200 SQUARE FT. COVERAGE, 1.5 FT. THICK

SONOMA COUNTY WATER AGENCY
CLOSE
TURNOUT

COVERS FOR (E) & (H)

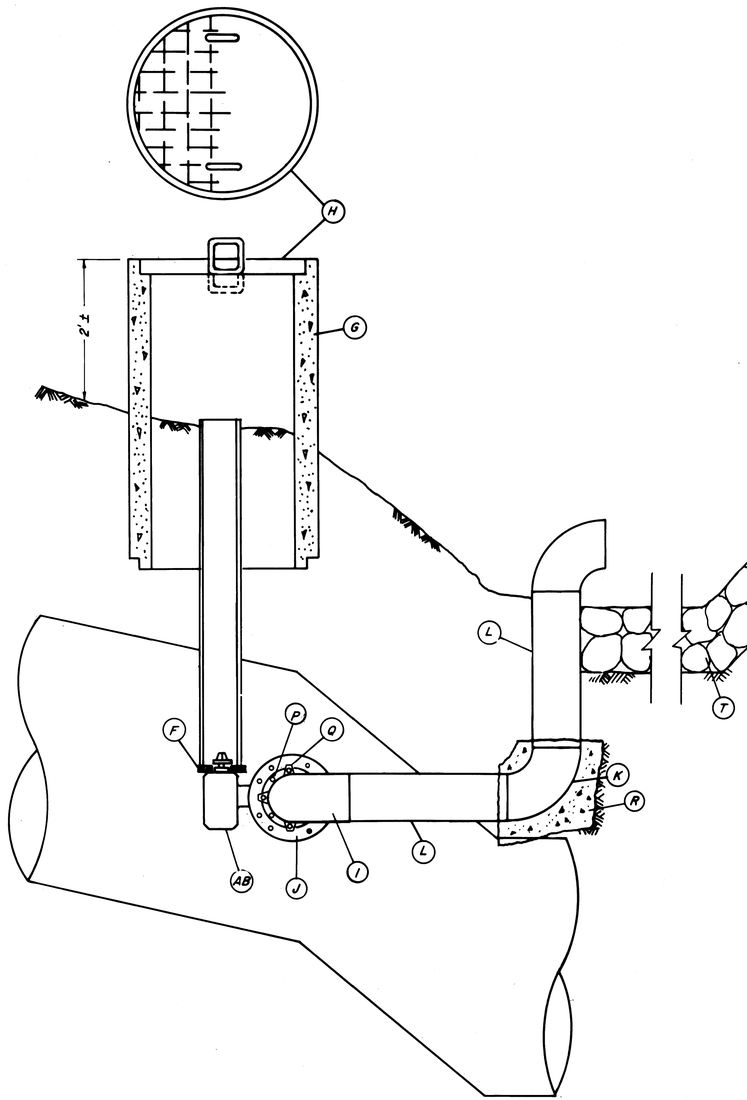

BLOWOFF TYPE A
IN AGENCY RIGHT OF WAY

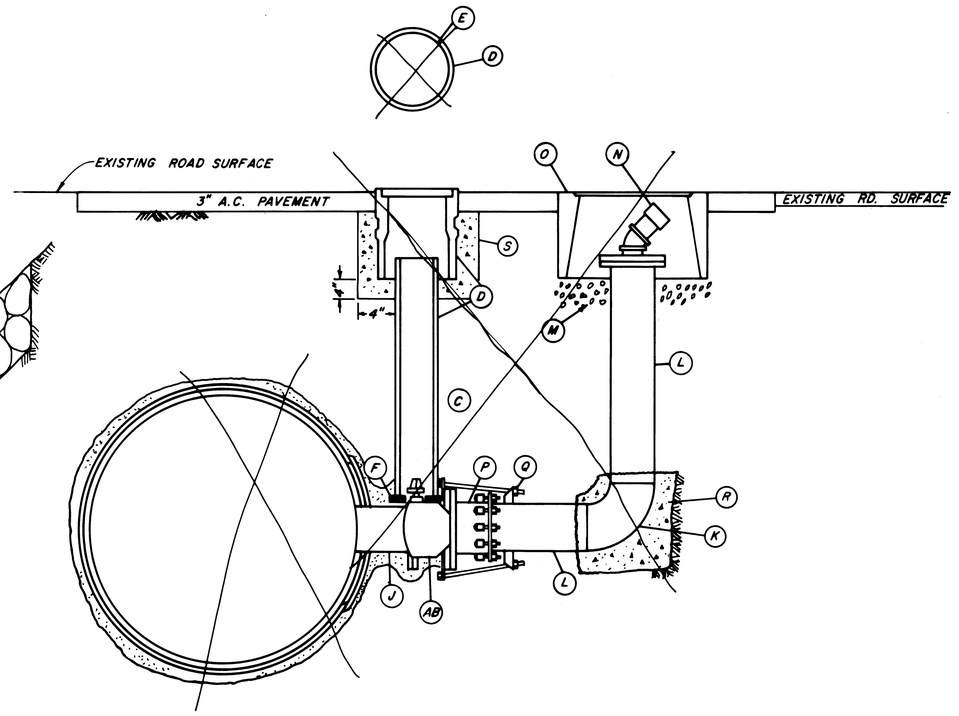

BLOWOFF TYPE B
IN ROADWAYS

NOTES

1. PRESSURE RATINGS OF EQUIPMENT SHOWN SHALL BE NO LESS THAN THE WORKING PRESSURE (IN FEET OF HEAD) INDICATED ON THE PROFILE DRAWINGS

Return to Index

No.	Date	REVISION	By
		AS BUILT Date 5-16-77 By:	

contract 2

RUSSIAN RIVER – COTATI INTERTIE PROJECT
BLOWOFF TYPE A & B

SCALE: NONE	APPROVED CHIEF ENGINEER	DRAWN
DATE: JULY 15, 1975	R.E. 8271	CHECKED
SONOMA COUNTY WATER AGENCY		
DESIGNED R.E. Schuler	SUBMITTED	DRAWING NUMBER WA-4

SHEET NO. 33 PH 27-48

MICROFILMED

PRINT

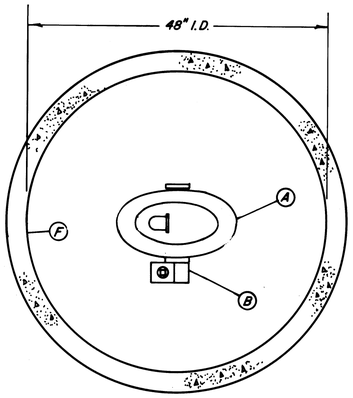

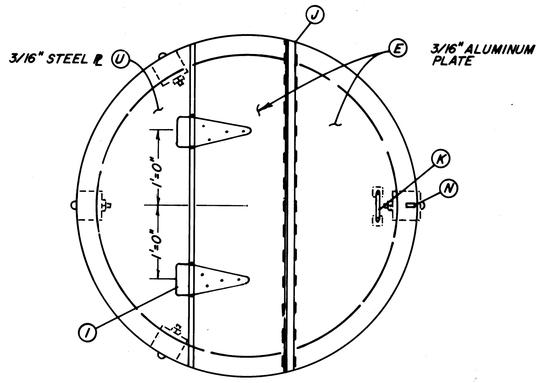

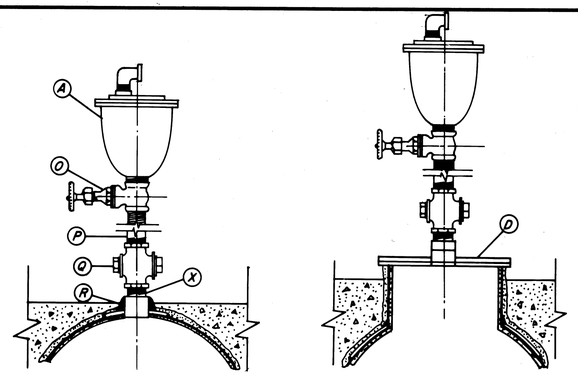

DETAIL A DETAIL B

FOR 2" AIR VALVES
(SAME HOUSING AS 4" REQUIRED)

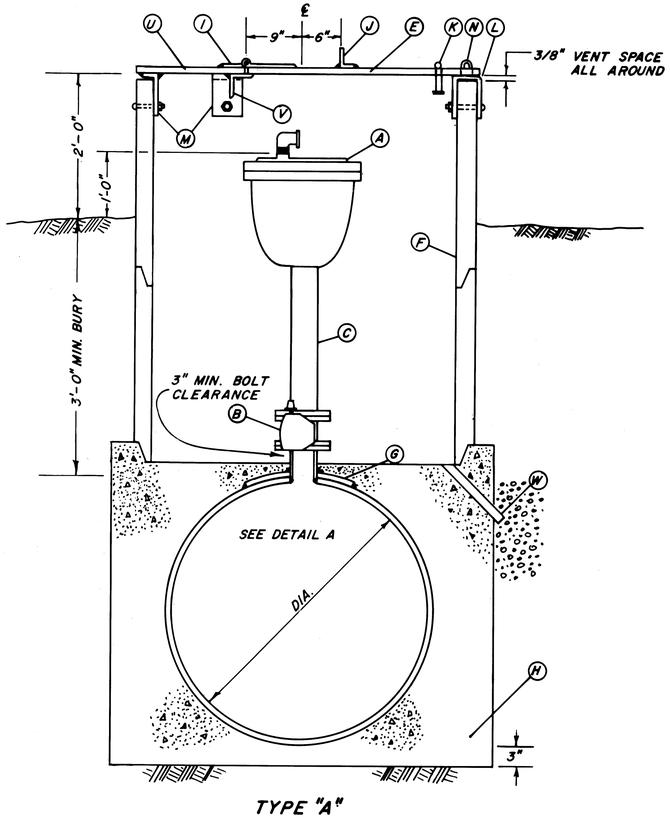

TYPE "A"
AIR VALVE INSTALLATION (4") WITHOUT MANHOLE IN AGENCY RIGHT OF WAY
FOR 2" AIR VALVES SEE DETAIL A

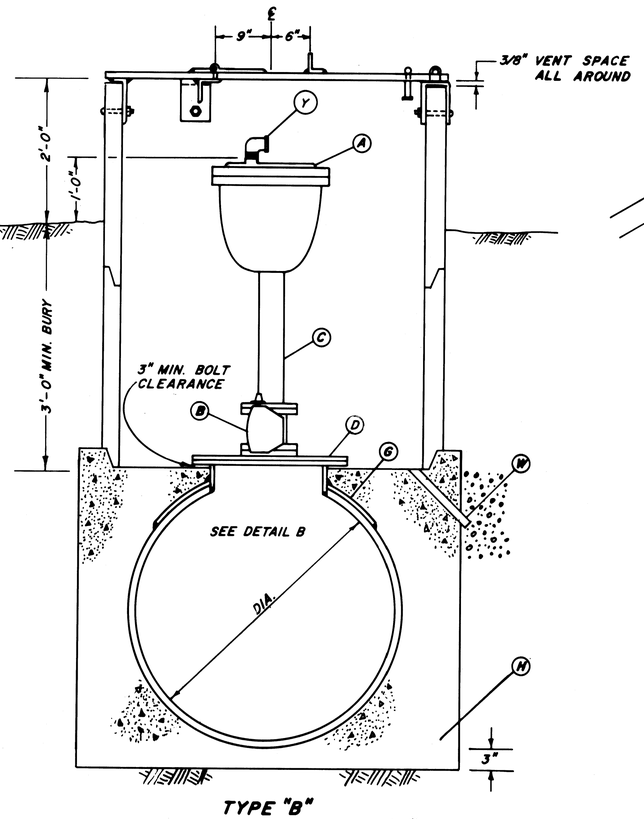

TYPE "B"
AIR VALVE INSTALLATION (4") WITH MANHOLE IN AGENCY RIGHT OF WAY
FOR 2" AIR VALVES SEE DETAIL B

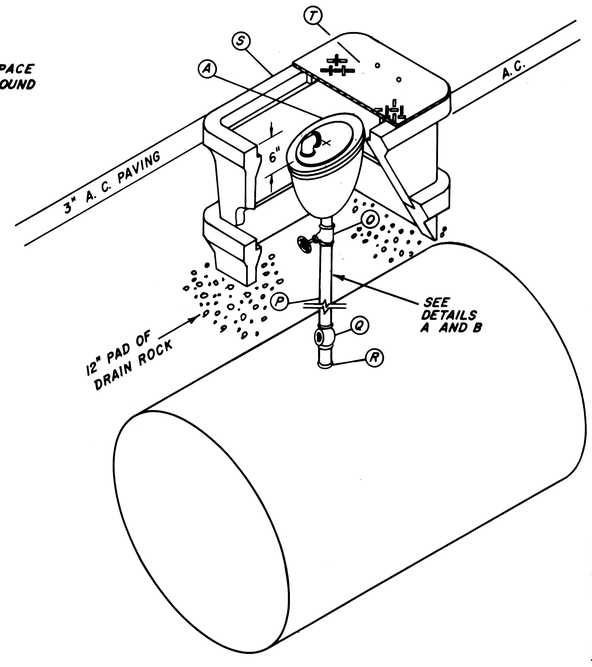

TYPE "C"
AIR VALVE INSTALLATION FOR ROADWAYS

A	COMBINATION AIR VALVE 2"OR 4" APCO 140 SERIES, OR APPROVED EQUAL
B	BUTTERFLY VALVE, 4", W/OPERATOR, SHORT BODY, FLANGED, RUBBER SEAT. PRATT — GROUNDHOG B.I.F. MODEL 658, ALLIS-CHALMERS STREAMSEAL OR A.W.W.A. APPROVED OR EQUAL.
C	4" STEEL PIPE WITH S. O. FLANGE
D	18" MANHOLE W/18" S. O. FLANGE & 18" BLIND FLANGE DRILLED & TAPPED FOR 4" OR 2" OUTLET. A.W.W.A. C208 & C207.
E	3/16" ALUM. PLATE FOR PORTION OF COVER
F	48" I.D. CONCRETE PIPE FOR AIR VALVE INSTALLATION
G	WELD SADDLE PLATE & MANHOLE OR OUTLET SECTION BY PIPE MANUFACTURER. A.W.W.A. C208
H	CLASS 4D2000 CONCRETE 5'X 5'X [D+2(9")]
I	8"X4" HEAVY DUTY HINGE, FILLET-WELD TO STEEL PLATE, BOLT TO ALUM. PLATE
J	2-1/2"X 1-1/2"X 1/4" ALUM. ANGLE, STITCH-WELD 1" ON 4" CENTERS
K	LIFTING HANDLE, 5/8" Ø ROD
L	C 6" LEGS X 3"X 1/4"X 3" STEEL STIRRUP, BOLT TO PIPE WITH 1/2"X 5-1/2" BOLT, ALLOW 3/8" MIN. VENT SPACE BETWEEN COVER & PIPE. WELD HASP STAPLE TO 3" SECTION
M	L 6"X 3"X 3" BRACKET, BOLT AS IN ITEM L-3 REQUIRED
N	CUT 3/8"X 1-3/4" SLOT IN COVER PLATE FOR HASP STAPLE
O	2" BRONZE GATE VALVE, CRANE NO. 488 OR A.E.
P	2" PIPE, SCHEDULE 80
Q	2" BRONZE CORPORATION COCK, CRANE NO. 320
R	2" THREDOLET BY PIPE MANUFACTURER
S	METER BOX SERIES 38 BROOKS OR APPROVED EQUAL STACKED, WITH TRAFFIC LID. USE REDWOOD OR CONCRETE SUPPORT BLOCKS (2-2"X 6"X 12")
T	TRAFFIC LID SERIES 38 BROOKS. DRILL 6, 3/4"DIA. HOLES EVENLY SPACED
U	3/16"STEEL PLATE FOR PORTION OF COVER
V	L 3"X 3"X 1/4"X 3'-3" STITCH WELD 1" ON 4" CENTERS
W	2" PLASTIC PIPE FLOOR DRAIN WITH 3 CU. FT. OF DRAIN ROCK
X	NIPPLE, SCHEDULE 80
Y	GALVANIZED ELBOW

NOTES

1. PRESSURE RATINGS OF EQUIPMENT SHOWN SHALL BE NO LESS THAN THE WORKING PRESSURE (IN FEET OF HEAD) INDICATED ON THE PROFILE DRAWINGS
2. ALL PIPING, 4" AND SMALLER, SHALL BE GALVANIZED UNLESS OTHERWISE NOTED

Return to Index

No.	Date	REVISION	By
		AS BUILT Date 5-16-77 By D. A. R. Allen	

Contract 2

RUSSIAN RIVER – COTATI INTERTIE PROJECT
AIR VALVE INSTALLATION
TYPE A, B & C

SCALE: NONE | APPROVED CHIEF ENGINEER | DRAWN
DATE: JULY 15, 1975 | Walter W. Miller RE 8271 | CHECKED JA
SONOMA COUNTY WATER AGENCY
DESIGNED R.E. Schaefer | SUBMITTED | DRAWING NUMBER WA-5

SHEET NO. 34 PH 27-43

MICROFILMED

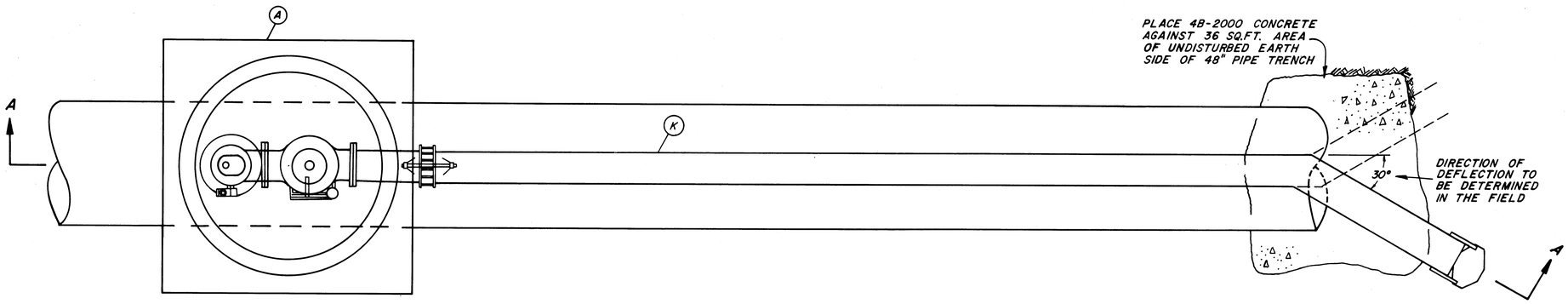

PLAN
SCALE: 1" = 2'

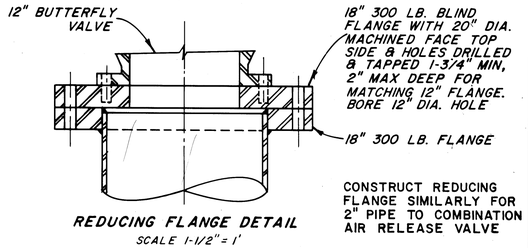

REDUCING FLANGE DETAIL
SCALE 1-1/2" = 1'

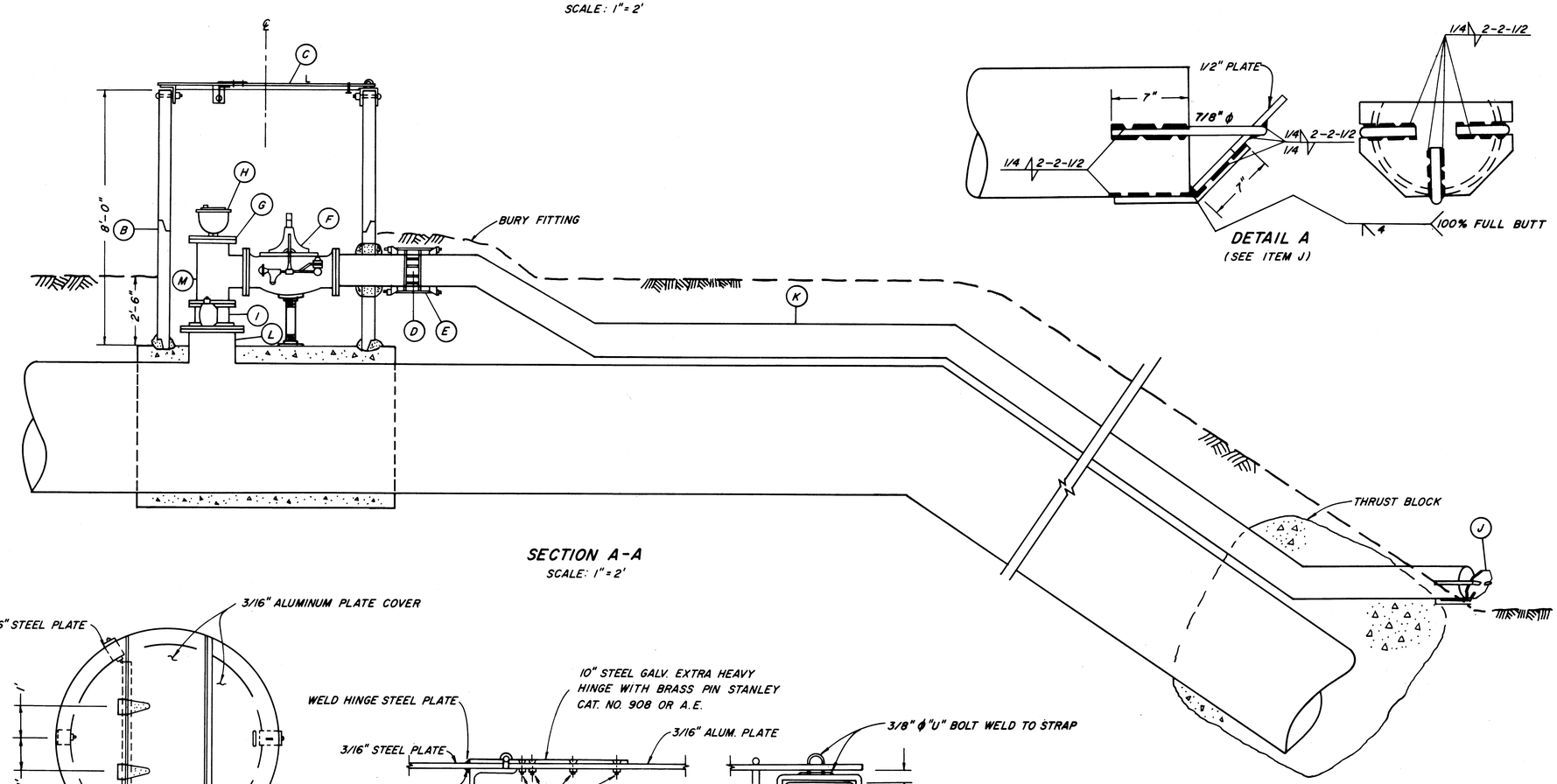

SECTION A-A
SCALE: 1" = 2'

DETAIL A
(SEE ITEM J)

A	8'x8'x 4.5' CONCRETE OUTLET BASE FOR CONCRETE PIPE INSTALL 4B 2000 CONCRETE SEE STANDARD SPEC. SECTION 201-1
B	72" DIAMETER REINFORCED CONCRETE PIPE SECTIONS
C	ALUMINUM HINGED LID WITH HASP.
D	12" COUPLING DRESSER OR SMITH BLAIR A.E.
E	BOLTED JOINT HARNESS PER. AWWA M-11 (STEEL PIPE MANUAL).
F	PRESSURE RELIEF VALVE — NON-SLAMMING BAILEY NO. 428 OR A.E.
G	12" 300 LB. BLIND FLANGE TAPPED FOR 2" OUTLET.
H	2" COMBINATION AIR RELEASE VALVE APCO 145 C OR A.E.
I	12" BUTTERFLY VALVE WITH OPERATOR — SHORT BODY, FOR NON-EMBEDDED SERVICE
J	DIFFUSER PLATE 1/2" ON 45° ANGLE WITH WELDED BRACES 7/8" ϕ
K	12" WELDED STEEL PIPE, ASTM A53, GR/B, LENGTH AS SPECIFIED. CEMENT MORTAR LINED & COATED NOT LESS THAN 3/8" WALL THICKNESS
L	18" MANHOLE WITH 18" 300LB. BLIND FLANGE MACHINED TO MATCH 150 LB. FLANGE OF BUTTERFLY VALVE
M	12" FLANGED STEEL TEE

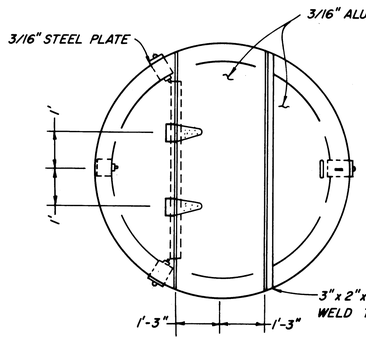

LID DETAIL
SCALE 1/2" = 1'

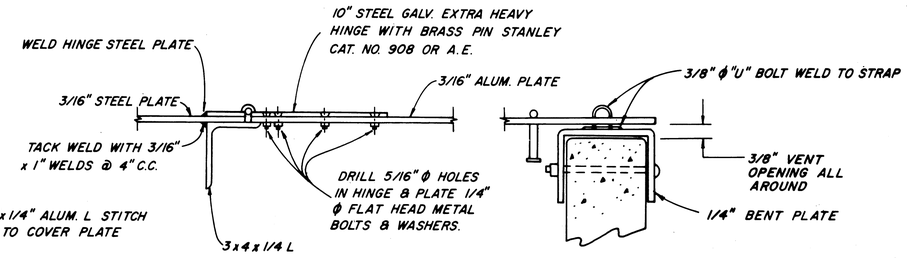

HINGE & HASP DETAILS
NOT TO SCALE

NOTES
1. PRESSURE RATINGS OF EQUIPMENT SHALL BE OF NO LESS THAN THE WORKING PRESSURE (IN FEET OF HEAD) INDICATED ON THE PROFILE DRAWINGS

Return to Index

No.	DATE	REVISION	By
		AS BUILT Date 5-16-77	

contract 2

RUSSIAN RIVER — COTATI INTERTIE PROJECT
PRESSURE RELIEF VALVE INSTALLATION

SCALE: AS SHOWN | APPROVED CHIEF ENGINEER | DRAWN
DATE: JULY 15, 1975 | RE 827 | CHECKED

SONOMA COUNTY WATER AGENCY

DESIGNED | SUBMITTED | DRAWING NUMBER
WA-6

SHEET NO. 35

PH 27-48

(ALL PAVED ROADS)

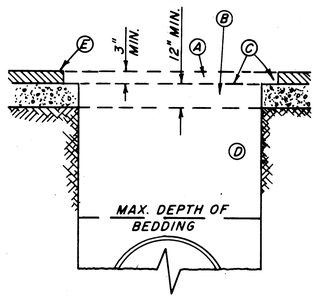

CLASS "A" BACKFILL AND TRENCH SURFACING

- (A) REPLACE EXISTING SURFACE WITH ASPHALTIC CONCRETE CONFORMING WITH SECTION 302-5 STD. SPECS.
- (B) CLASS 2 AGGREGATE BASE CONFORMING WITH SECTION 200-2 STD. SPECS.
- (C) RS-1 EMULSIFIED ASPHALT
- (D) STRUCTURE BACKFILL MATERIAL COMPACTED TO 95% WITHIN 3' OF FINISHED GRADE, 90% BELOW.
- (E) ROADWAY PAVEMENT TO BE SAW-CUT & REMOVED FOR 6" EACH SIDE OF TRENCH.

(DIRT ROADS)

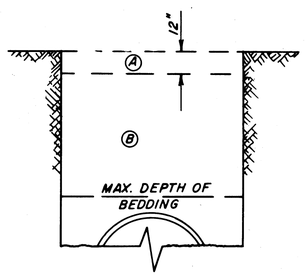

CLASS "B" BACKFILL AND TRENCH SURFACING

- (A) EXCAVATED OR IMPORTED MATERIAL COMPACTED IN 6-INCH LIFTS TO 85%. NO ROCKS LARGER THAN 4" IN DIAMETER SHALL BE INCLUDED IN THIS MATERIAL.
- (B) LOCAL OR IMPORTED MATERIAL COMPACTED OR CONSOLIDATED TO 80%

(GRAVEL ROADS) OR (SHALE ROADS)

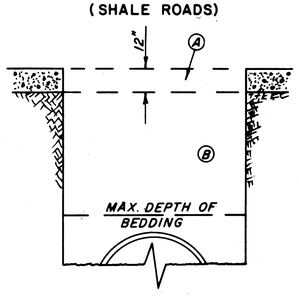

CLASS "C" BACKFILL AND TRENCH SURFACING

- (A) REPLACE EXISTING ROADWAY SURFACE WITH UNTREATED ROCK BASE CONFORMING WITH SECTION 301-2 STD. SPECS. COMPACTED TO 90%.
- (B) LOCAL OR IMPORTED MATERIAL COMPACTED OR CONSOLIDATED TO 85%

(DRY PASTURE)

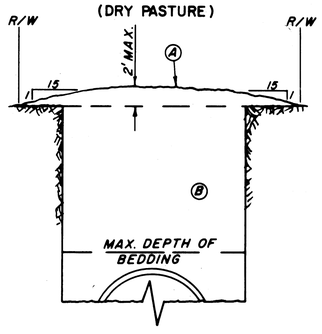

CLASS "D" BACKFILL

- (A) EXCESS SPOIL TO BE MOUNDED WITHIN R/W AS SHOWN EXCEPT AT LOCATIONS OF CROSS DRAINS OR SWALES; AT THESE LOCATIONS A "V" NOTCH WITH 6:1 SIDE SLOPES SHALL BE CONSTRUCTED.
- (B) EXCAVATED OR IMPORTED MATERIAL COMPACTED OR CONSOLIDATED TO 76%

(IRRIGATED, CULTIVATED) (OR CROP LAND)

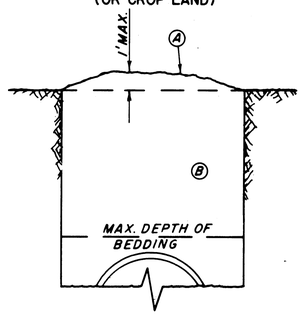

CLASS "E" BACKFILL

- (A) EXCESS SPOIL TO BE MOUNDED EVENLY OVER TRENCH EXCEPT AT CROSS SWALES.
- (B) EXCAVATED OR IMPORTED MATERIAL COMPACTED OR CONSOLIDATED TO 76%

GENERAL NOTES

1. CLASS "A" BACKFILL AND TRENCH SURFACING SHALL BE REQUIRED ON ALL PAVED ROADS AND STREETS & WHERE SPECIFIED IN THE SPECIAL PROVISIONS.
2. CLASS "B" BACKFILL AND TRENCH SURFACING SHALL BE REQUIRED ON DIRT ROADS & TRAVELED WAYS & WHERE SPECIFIED IN THE SPECIAL PROVISIONS.
3. CLASS "C" BACKFILL AND TRENCH SURFACING SHALL BE REQUIRED ON GRAVEL OR SHALE ROADS & WHERE SPECIFIED IN THE SPECIAL PROVISIONS.
4. CLASSES "D" & "E" BACKFILL SHALL BE REQUIRED IN THE AGENCY RIGHT-OF-WAY UNLESS OTHERWISE INDICATED ON THE PLAN AND PROFILE.
5. NO ROCK LARGER THAN 1" SHALL BE PLACED WITHIN 6" OF THE PIPE.
6. ~~CONCRETE~~ COATED PIPE IN WET ~~TRENCH CONDITIONS~~ SHALL BE ~~BEDDED IN 3/4" MINUS~~ DRAIN ROCK IN LIEU OF 3" SAND BEDDING OR ~~EXCAVATED SELECT~~ MATERIAL.
7. A MINIMUM OF 3'-0" COVER OVER THE TOP OF THE PIPE SHALL BE MAINTAINED UNLESS OTHERWISE SPECIFIED OR SHOWN.
8. DELETED — ~~THE~~ CONTRACTOR SHALL BE REQUIRED TO ~~BACKFILL A SUFFICIENT DEPTH OVER THE TOP OF THE PIPE TO PREVENT FLOATING IN THE EVENT THE TRENCH BECOMES~~ FLOODED.
9. THE THICKNESS OF ASPHALTIC CONCRETE AND UNTREATED ROCK BASE SHOWN FOR CLASS "A" BACKFILL AND TRENCH SURFACING ARE THE MINIMUM THICKNESS PERMITTED. WHERE THE EXISTING PAVEMENT AND/OR ROCK BASE IS THICKER THAN THE MINIMUM IT SHALL BE REPLACED TO THE EXISTING THICKNESS.
10. DELETED — ~~ON STEEP~~ SLOPES (30% OR MORE) AT EVERY 100' ~~PROVIDE A FULL DEPTH~~ PLUG OF NATIVE ~~MATERIAL~~ APPROXIMATELY 5' THICK TO ~~PREVENT~~ PIPING OF BEDDING AND BACKFILL ~~MATERIAL~~. PLUG SHALL ~~INCLUDE~~ BEDDING AND ~~BACKFILL~~ COMPACTED TO A RELATIVE COMPACTION ~~OF 85%~~.
11. THE CLASS OF BEDDING AND BACKFILL DESIGNATED ON THE PLAN AND PROFILE DRAWINGS WILL BE BY SYMBOL CONSISTING OF A LOWER CASE LETTER FOR THE CLASS OF BEDDING, FOLLOWED BY A SLASH, THEN FOLLOWED BY AN UPPER CASE LETTER FOR THE CLASS OF BACKFILL.
    Example: a/B = CLASS "a" BEDDING AND CLASS "B" BACKFILL.

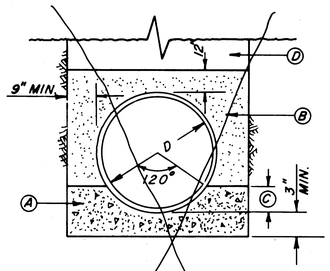

CLASS "a" BEDDING

- (A) CONCRETE, CLASS 4-B-1000.
- (B) BEDDING CONFORMING WITH SECTION 306 STANDARD SPECS COMPACTED TO 80%.
- (C) 1/4 D MINIMUM.
- (D) BACKFILL AS INDICATED FOR LOCATION UNDER GENERAL NOTES.

NOT USED

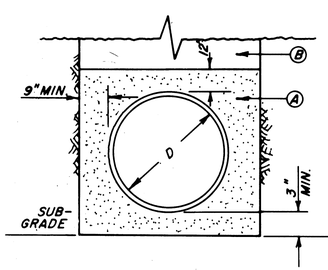

CLASS "b" BEDDING

- (A) BEDDING CONFORMING WITH THE SPECIAL PROVISION (SAND EQUIVALENT OF 30 OR BETTER) COMPACTED TO 90%.
- (B) BACKFILL AS INDICATED FOR LOCATION UNDER GENERAL NOTES.

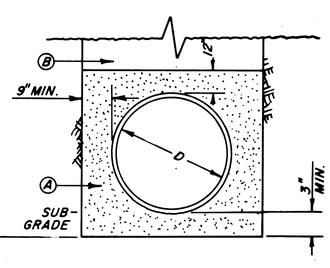

CLASS "c" BEDDING

- (A) EXCAVATED OR IMPORTED MATERIAL PER SPECIAL PROVISIONS COMPACTED TO 85%
- (B) BACKFILL AS INDICATED FOR LOCATION UNDER GENERAL NOTES.

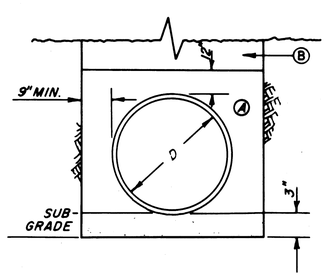

CLASS "d" BEDDING

- (A) EXCAVATED OR IMPORTED MATERIAL PER SPECIAL PROVISIONS COMPACTED TO 80%
- (B) BACKFILL AS INDICATED FOR LOCATION UNDER GENERAL NOTES

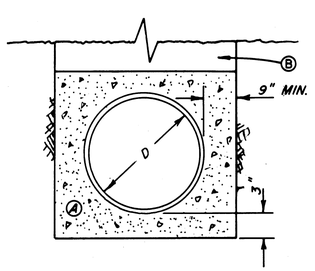

CLASS "e" BEDDING

- (A) CONCRETE, CLASS 5-B-2000 MIN., CONFORMING WITH THE SPECS.
- (B) BACKFILL AS INDICATED FOR LOCATION UNDER GENERAL NOTES.

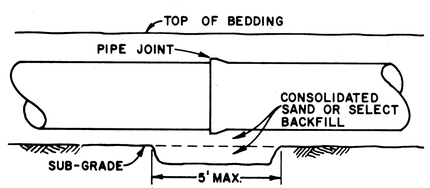

BELL HOLE DETAIL

Return to Index

No.	DATE	REVISION	By
		AS BUILT Date 5-16-77 By Daniel R. Mc	

contract 2

RUSSIAN RIVER-COTATI INTERTIE PROJECT

PIPE BEDDING, BACKFILL AND TRENCH SURFACING

SCALE: NONE | APPROVED CHIEF ENGINEER | DRAWN

DATE: JULY 15, 1975 | Gordon W. Mueller RE 8271 | CHECKED JA

SONOMA COUNTY WATER AGENCY

DESIGNED | SUBMITTED | DRAWING NUMBER WA-7

SHEET NO. 36

PH 27-41B

MICROFILMED

STEEL SIGN AND POST

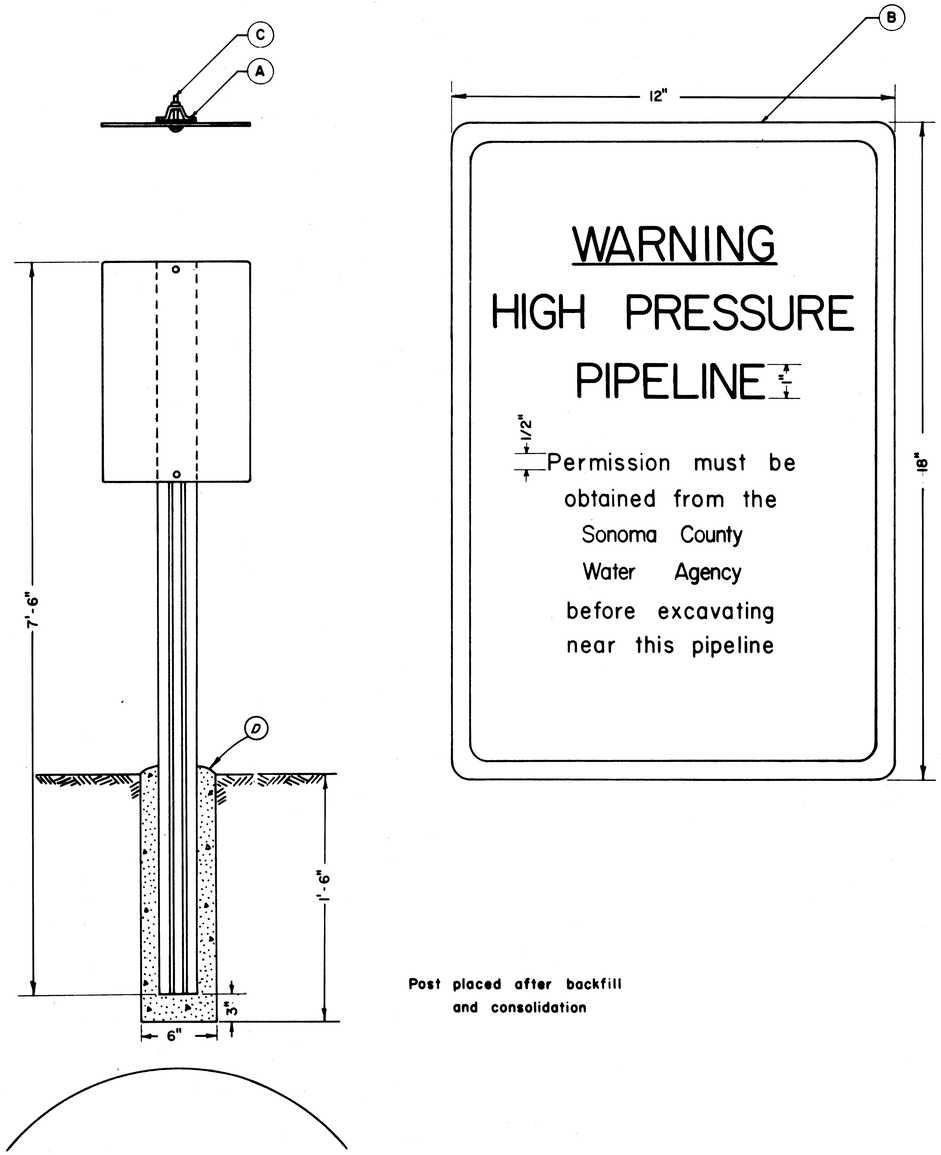

Post placed after backfill
and consolidation

D	4-B-2000 concrete footing
C	Two bolts 5/16" x 2 1/4", two 5/16" nuts, two fibre washers, two 1 1/2" x 3" x 1/8" plates
B	Perma sign reflective — 12" x 18", Red on White - Bowman Industries Inc. or A.E.
A	7 1/2' Post — overall width 3 1/16", back thickness 1/8" side thickness .1172", overall depth 1 7/16", flange thickness 1/8", weight 2 lbs. per ft.

Return to Index

contract 2

No.	DATE	REVISION	By
		AS BUILT Date 5-16-77 By Da. J.R. [illegible]	

HIGH PRESSURE PIPELINE
WARNING SIGN

SCALE: NONE
DATE: JULY 15, 1975
APPROVED CHIEF ENGINEER [signature] RE 8271
DRAWN
CHECKED [signature]

SONOMA COUNTY
WATER AGENCY

DESIGNED R.E. [signature]
SUBMITTED [signature]
DRAWING NUMBER WA-8

SHEET NO. 37 PH 27-4B

MICROFILMED 3

SONOMA COUNTY WATER AGENCY

RUSSIAN RIVER-COTATI INTERTIE PROJECT

PIPELINE CONTRACT NO. 3

COTATI RESERVOIR TO PETALUMA AQUEDUCT

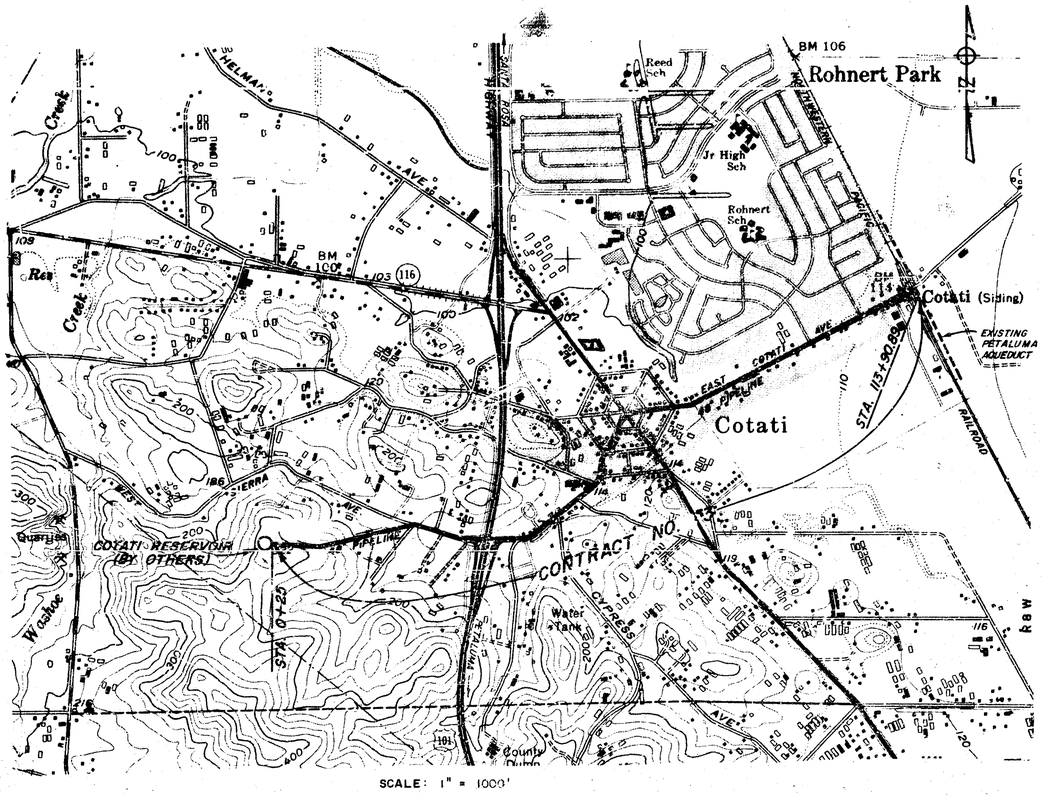

GENERAL NOTES

1. ELEVATIONS SHOWN ARE IN FEET & DECIMALS THEREOF ABOVE N.G.S. M.S.L.
2. STATIONS SHOWN ON PLAN & PROFILE ARE HORIZONTAL DISTANCES UNLESS OTHERWISE NOTED.
3. ALL STATIONS, GRADES & ELEVATION ARE SUBJECT TO REVISION TO SUIT FIELD CONDITIONS.
4. AERIAL PHOTOS TAKEN MAY 5, 1971
5. DRAWINGS ARE DESIGNATED BY THEIR LAST THREE DIGITS, e.g., DRAWING NO 60-4-102.201 IS REFERRED TO AS DRAWING NO 201, ETC.

LEGEND

FACILITIES TO BE CONSTRUCTED

- CENTERLINE OF RIGHT OF WAY
- ELECTROLYSIS TEST STATION (ES 2P)
- GALVANIC ANODE (GA A)
- PRE = PERMANENT REFERENCE ELECTRODE
- VEGETATION
  - EROSION CONTROL
  - PERMANENT PASTURE REESTABLISHMENT
- INSULATION FLANGE
- HIGH PRESSURE PIPELINE WARNING SIGN
- MANHOLE
- MAINLINE VALVE
- AIR VALVE
- PRESSURE RELIEF VALVE
- TURNOUT
- BLOWOFF
- BLIND TEE OR LATERAL
- AIR VALVE AROUND MAINLINE VALVE
- FIELD GATE ON ℄ OF R/W

CLASS OF BEDDING & BACKFILL DESIGNATION PER DWG. NO. WA-7 SPECIFIC PIPE ELEVATIONS SHOWN ON PIPE PROFILE ARE FOR OUTSIDE TOP OF PIPE.

EXISTING FACILITIES

- GAS LINE — G —
- SANITARY SEWER — SS —
- WATER LINE — 6"W —
- TELEVISION CABLE — TV —
- ELECTRIC CABLE — E —
- TELEPHONE CABLE — ▲ —
- FENCE — x — x —
- PROPERTY LINE — ℄ —
- POWER AND/OR TELEPHONE CABLE & GUY

OTHER INFORMATION

- SOIL SAMPLE LOCATION (7)
- SURVEY CONTROL POINT (A-37)
- REFERENCE POINTS FOR LOCATING R/W CENTERLINE: RP NAIL IN POST, 13.12', 12.63', RP NAIL IN POST; 66.164.18 HORIZ.
- RIGHT OF WAY & CONSTRUCTION EASEMENT. UNLESS INDICATED OR DIRECTED OTHERWISE, PIPE ℄ SHALL BE ON R/W ℄: R/W, 25', 25', R/W; 25' CONSTRUCTION EASEMENT

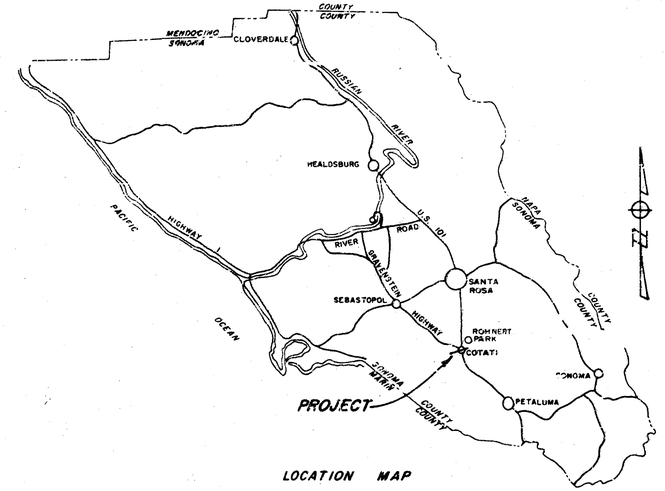

LOCATION MAP

INDEX TO DRAWINGS

SHT. NO.	DRAWING NO.	TITLE
1	60-4-102.301	LOCATION MAP & INDEX TO DRAWINGS
2	102.302	HYDRAULIC GRADE LINE.
3	102.303	PLAN & PROFILE – STA. 0+25 TO STA. 28+32
4	102.304	STA. 28+32 TO STA. 55+55
5	102.305	STA. 55+55 TO STA. 84+74
6	102.306	STA. 84+74 TO STA. 113+82 ±
7	102.307	RESERVOIR CONNECTION, LOG OF BORINGS & THRUST WELDS
8	102.308	BEDDING, BACKFILL & LAGUNA CROSSING
9	102.309	RAILROAD XING & PETALUMA AQUEDUCT CONNECTION
10	102.310	MISCELLANEOUS DETAILS
11	WA-1	GALVANIC ANODES AND ELECTROLYSIS TEST STATIONS
12	WA-2	DISTRIBUTION TURNOUT TYPE A AND TYPE B
13	WA-3	MAIN LINE VALVE TYPE A & B
14	WA-5	AIR VALVE INSTALLATION TYPE A, B & C
15	WA-8	HIGH PRESSURE PIPELINE WARNING SIGN

UTILITY NOTES

THE AGENCY HAS, TO THE BEST OF ITS ABILITY, DELINEATED ON THE DRAWINGS UTILITY INSTALLATIONS TO BE ENCOUNTERED WITHIN THE LIMITS OF THE WORK. SUCH INFORMATION IS BASED UPON INFORMATION FURNISHED TO THE AGENCY BY THE UTILITY OWNERS, AND THE AGENCY, EITHER EXPRESSLY OR BY IMPLICATION, DOES NOT GUARANTEE THAT UTILITY INSTALLATIONS WILL BE FOUND AT THE LOCATIONS OR DEPTHS INDICATED. THE AGENCY ASSUMES NO RESPONSIBILITY FOR THE ACCURACY OF THE INFORMATION SHOWN OR FOR THE INADVERTENT OMISSION OF ANY SUCH INFORMATION. PROFILES DO NOT SHOW ALL UTILITY SERVICE LATERALS.

Return to Index

No.	Date	REVISION	By
		AS BUILT Date 5-16-72	

RUSSIAN RIVER – COTATI INTERTIE PROJECT
COTATI RESERVOIR TO PETALUMA AQUEDUCT
LOCATION MAP & INDEX TO DRAWINGS

SCALE: AS SHOWN | APPROVED: Chief Engineer | DRAWN: S.F.M.
DATE: JULY 1, 1975 | RE 8271 | CHECKED: S.F.M.

SONOMA COUNTY WATER AGENCY

DESIGNED: T.P. Rudnick | SUBMITTED | DRAWING NUMBER: 60-4-102.301

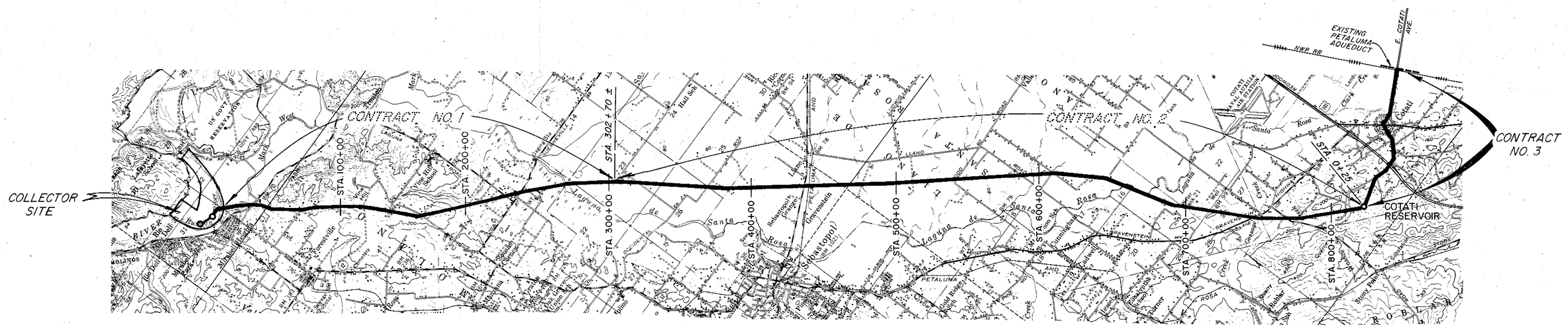

STA. 0+00 — CONTRACT NO. 1 — STA. 302+70 ± — CONTRACT NO. 2 — STA. 826+55 — STA. 01+25 — PIPELINE CONTRACT NO. 3 — STA. 113+82 ± PETALUMA AQUEDUCT

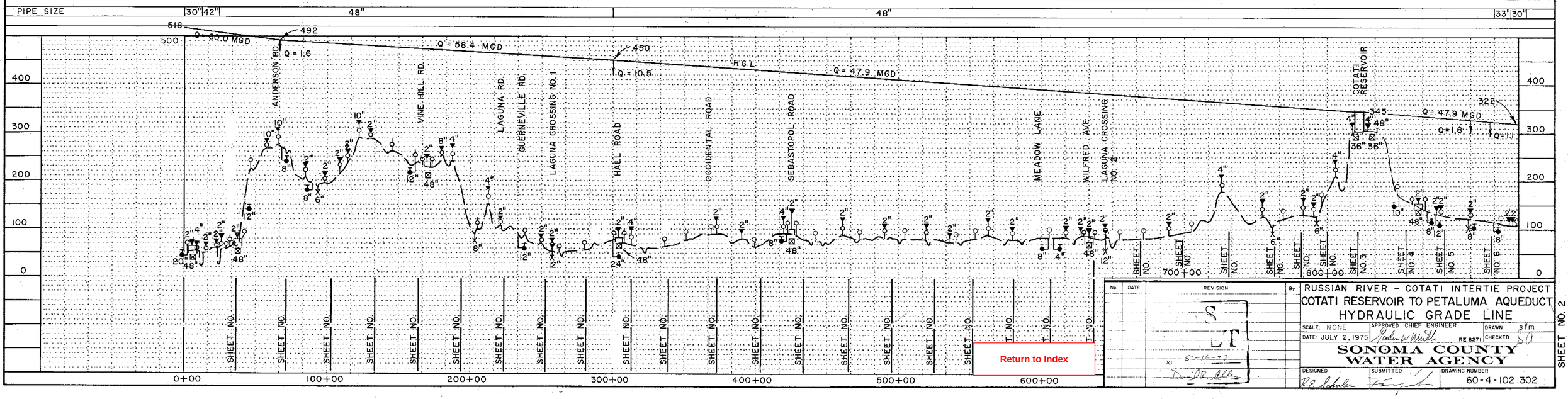

Return to Index

No.	DATE	REVISION	By

RUSSIAN RIVER – COTATI INTERTIE PROJECT
COTATI RESERVOIR TO PETALUMA AQUEDUCT
HYDRAULIC GRADE LINE

SCALE: NONE | APPROVED CHIEF ENGINEER | DRAWN sfm
DATE: JULY 2, 1975 | RE 8271 | CHECKED

SONOMA COUNTY WATER AGENCY

DESIGNED | SUBMITTED | DRAWING NUMBER
60-4-102.302

SHEET NO. 2

FOR DETAILS SEE DWG. NO. 307

BEGIN CONTRACT STA. 0+25 SEE DETAIL DWG. NO. 307

STA. 0+00

STA. 2+35 INSTALL 48" TEE RT. BLIND FLANGE

715.43'
S 86°53'36.2" E

229,225.14N
1,792,235.88E

N 34°06'56" E
644.49'

219.02'
N 89°12'55" E

647.47'
N 50°10'00" E

658.28'
R/W
S 51°15'20" E
1213.6'

491.38'
R/W

211.08'
R/W

687.51'
R/W

975.85'
1471.95'
N 77°12'02.5" E
1041.32'

2118.61'
N 48°10'56" E
1995.44'

231.33'
535.58'

316.04'
R/W

SCHOLLMANN, K. & L.
A.P. 46-181-3

SCHOLLMANN, K. & L.
A.P. 46-181-4

WOOD WATER TANK

PRE GA A

INSTALL FIELD GATE

INSTALL FIELD GATE

1-1/2" W EXPOSED

STA. 7+40.43 HORIZ.
DEF. LT. 15°47'21.5"
INSTALL WARNING SIGN

SCWA

N239,000
E1,793,000

N239,000
E1,794,000

TANUDTSEN

WEST SIERRA AVE.

INSTALL 24" CMP

25' TEMPORARY CONSTRUCTION EASEMENT

2" GAS ELECTRIC FENCE

PINE LANE

INSTALL FIELD GATE & ELEC. FENCE TEST HOLE NO. 27

STA. 21+25 INSTALL MANHOLE

STA. 22+12.38 HORIZ. DEF. RT. 29°29'33.5"

STA. 22+15 INSTALL 10" TURNOUT TYPE B LEFT SIDE

S 73°11'24" E
799.31'

STA. 28+00 EXIST'G 1'x2' CONC. BOX CULV.

MATCH LINE

STA. 28+32

2" GAS

DRIVEWAY

R.P. NAIL & SHINER IN S. FACE OF U.P.

29.39'

42.54'

STA. 22+12.38 HORIZ.

PINE LANE

R.P. CROSS CHISELED IN W. FACE OF STREET MARKER POST.

100 0 100 200
scale feet

N

HEAD in ft.	60	80	100	120	140	160	180	200	220
SPECIALS									
PIPE SIZE & TYPE	48"						48"		
REVEGETATION									
BEDDING/BACKFILL	CLASS D							CLASS A	

COTATI RESERVOIR 305

BEGIN CONTRACT STA. 0+25 SEE DETAIL DWG. NO. 307

STA. 2+35 INSTALL 48" TEE RT. BLIND FLANGE INSTALL WARNING SIGN

EXIST'G GROUND

48" PIPELINE

STA. 7+40.43 HORIZ. DEF. LT. 15°47'21.5" INSTALL WARNING SIGN

EXISTING 1-1/2" WATER - EXPOSED

EXIST'G GROUND

48" PIPELINE

℄ SIERRA AVE.

EXIST'G 2" GAS

STA. 21+25± INSTALL MANHOLE EXIST'G 2" GAS

STA. 22+12.38 HORIZ. DEF. RT. 29°29'33.5"

STA. 22+15 INSTALL 10" TURNOUT TYPE B LT.

EXIST'G GROUND

48" PIPELINE

STA. 28+00 EXIST'G 1'x2' CONC. BOX CULV. E 144.0

MATCH LINE

STA. 28+32

25+00

310 300 290 280 270 260 — 260 210 200 160 — 160 150 140

0+00 5+00 10+00 15+00 20+00

Return to Index

No.	DATE	REVISION	By

RUSSIAN RIVER – COTATI INTERTIE PROJECT
STA. 0+25 TO STA. 28+32

SCALE: 1" = 100' | APPROVED CHIEF ENGINEER | DRAWN gfm
DATE: JULY 3, 1975 | RE 827 | CHECKED SA

SONOMA COUNTY WATER AGENCY

DESIGNED | SUBMITTED | DRAWING NUMBER 60-4-102.303

5-15-77

SHEET NO. 3

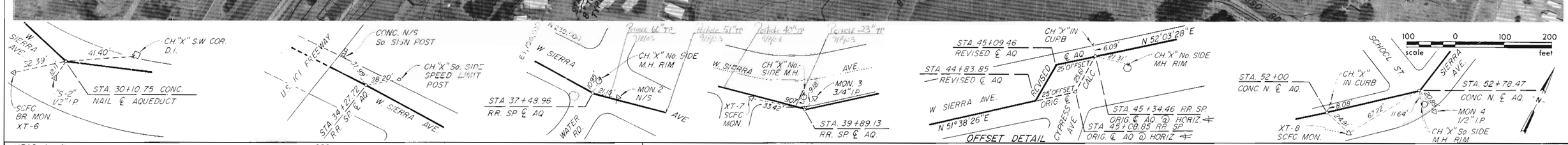

HEAD in ft. 220 240

SPECIALS ★ 1' CONCRETE COVER Due TO ONLY 25" COVER

PIPE SIZE & TYPE 48"

BEDDING/BACKFILL CLASS A

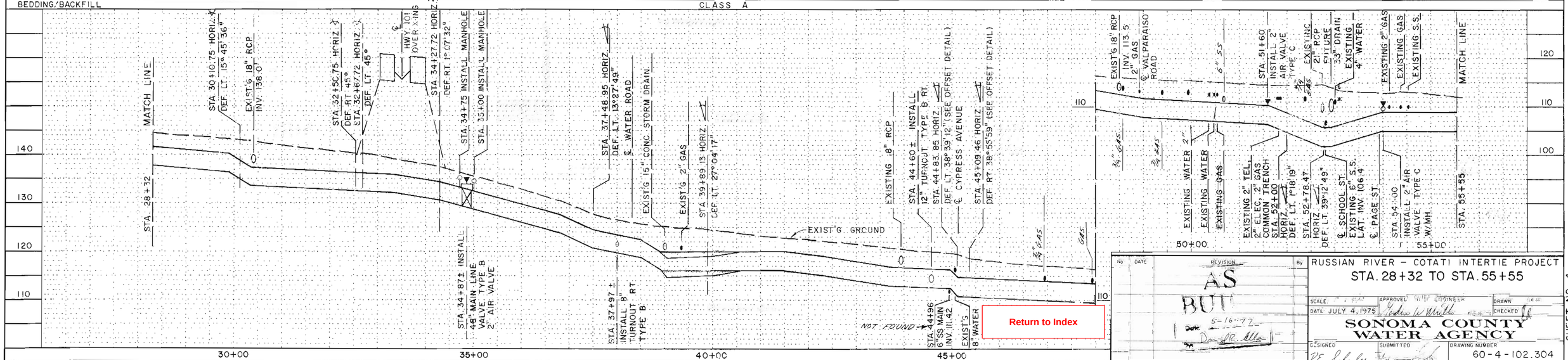

NO	DATE	REVISION	BY
		AS BUILT	
		Date 5-16-72	

RUSSIAN RIVER – COTATI INTERTIE PROJECT

STA. 28+32 TO STA. 55+55

SCALE: APPROVED: CHIEF ENGINEER DRAWN

DATE: JULY 4, 1975 CHECKED

SONOMA COUNTY WATER AGENCY

DESIGNED SUBMITTED DRAWING NUMBER

60-4-102.304

SHEET NO. 4

Return to Index

NOTE: NOTIFY TELEPHONE COMPANY & PG&E WHEN WORKING AROUND THEIR FACILITIES

Return to Index

No	DATE	REVISION	By
		AS BUILT Date 5-16-77 By David R. ...	

RUSSIAN RIVER - COTATI INTERTIE PROJECT
STA. 55+55 TO STA. 84+74

SCALE: 1" = 100' | DATE: JULY 5, 1975 | APPROVED | DRAWN sfm | CHECKED

SONOMA COUNTY WATER AGENCY

DESIGNED R.E. Schuler | SUBMITTED | DRAWING NUMBER 60-4-102.305

SHEET NO. 5

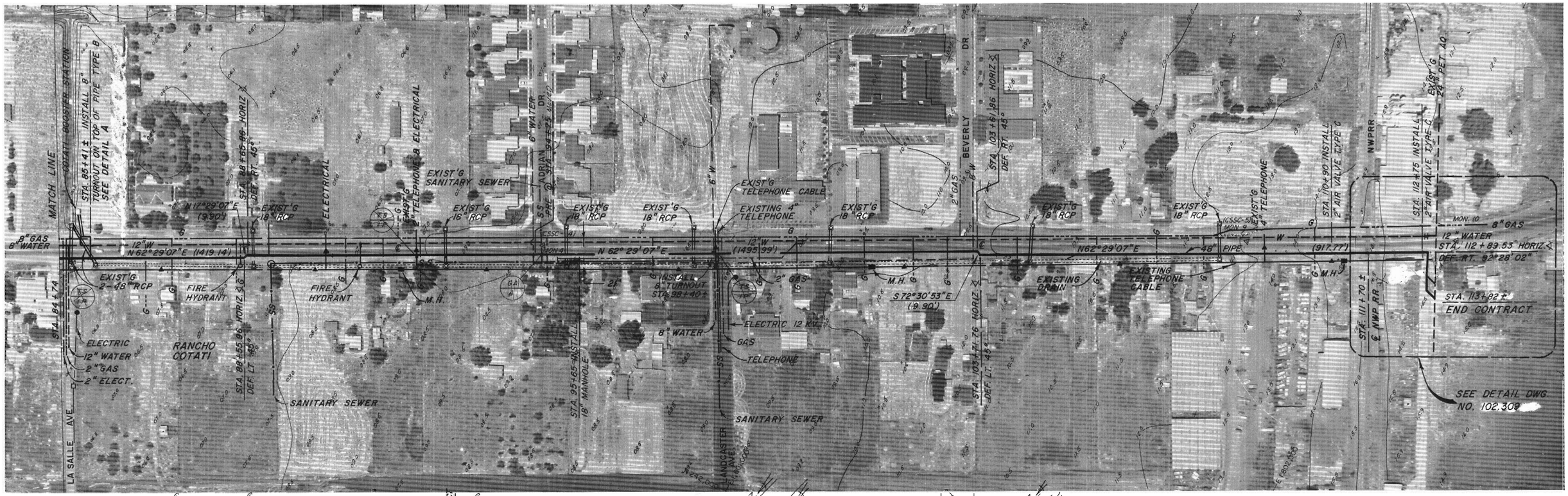

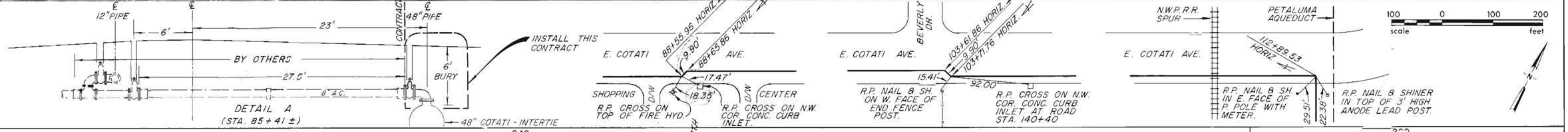

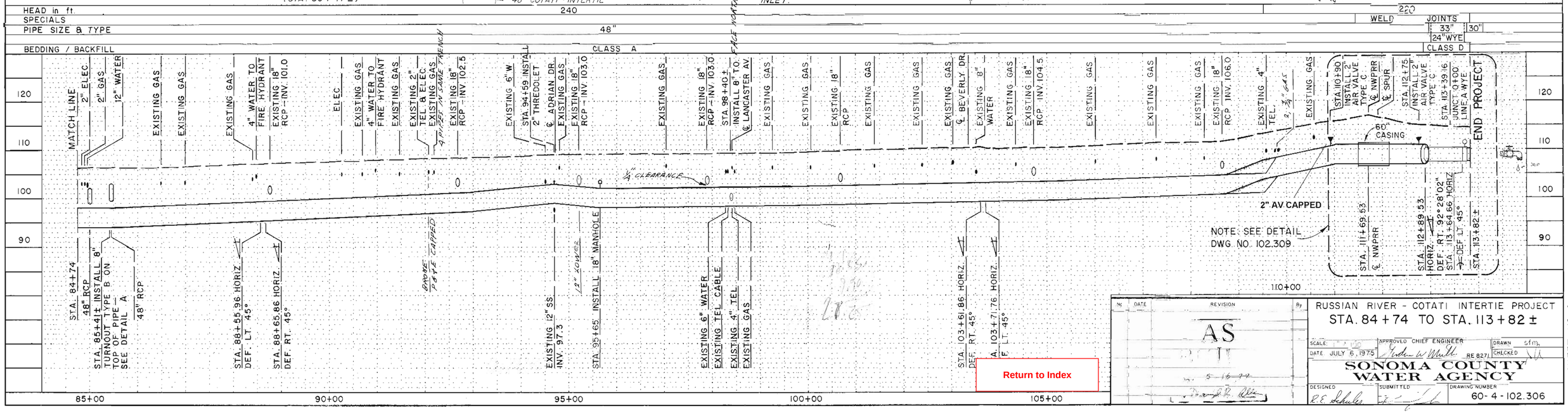

NO.	DATE	REVISION	BY
		AS IT	

RUSSIAN RIVER - COTATI INTERTIE PROJECT

STA. 84 + 74 TO STA. 113 + 82 ±

SCALE: 1" = 10'
APPROVED CHIEF ENGINEER
DRAWN sfm
DATE JULY 6, 1975
RE 8271
CHECKED

SONOMA COUNTY WATER AGENCY

DESIGNED R.E. Schulz
SUBMITTED
DRAWING NUMBER 60-4-102.306

SHEET NO. 6

Return to Index

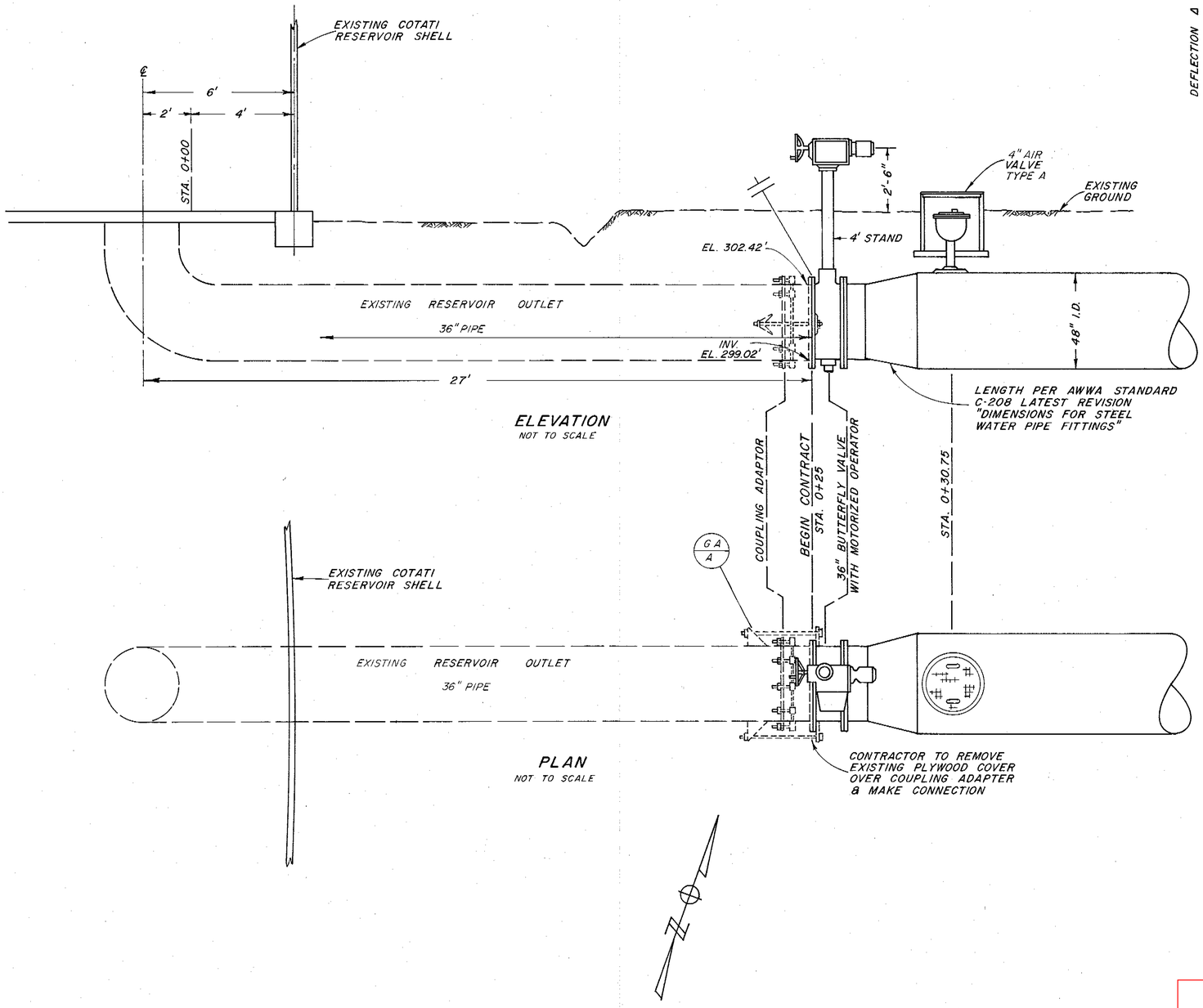

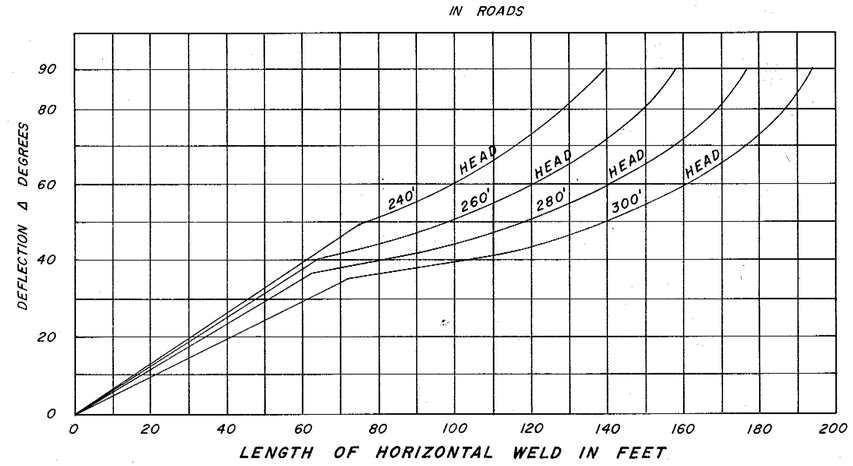

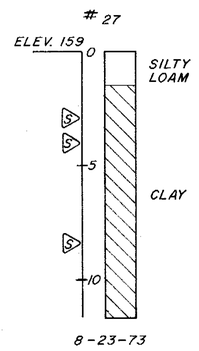

PINE LANE & WEST SIERRA

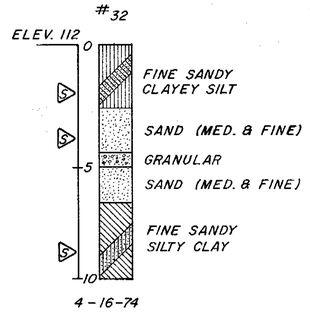

WEST SIERRA
(STA. 56+00)

S DENOTES SAMPLING DEPTHS

No.	DATE	REVISION	By
		AS	
		5-16-77	

RUSSIAN RIVER-COTATI INTERTIE PROJECT
RESERVOIR CONNECTION, LOG OF BORINGS & THRUST WELDS

SCALE: NO SCALE
APPROVED CHIEF ENGINEER
DRAWN S fm
DATE: JULY 7, 1975
RE 827
CHECKED

SONOMA COUNTY WATER AGENCY

DESIGNED
SUBMITTED
DRAWING NUMBER
60-4-102.307

Return to Index

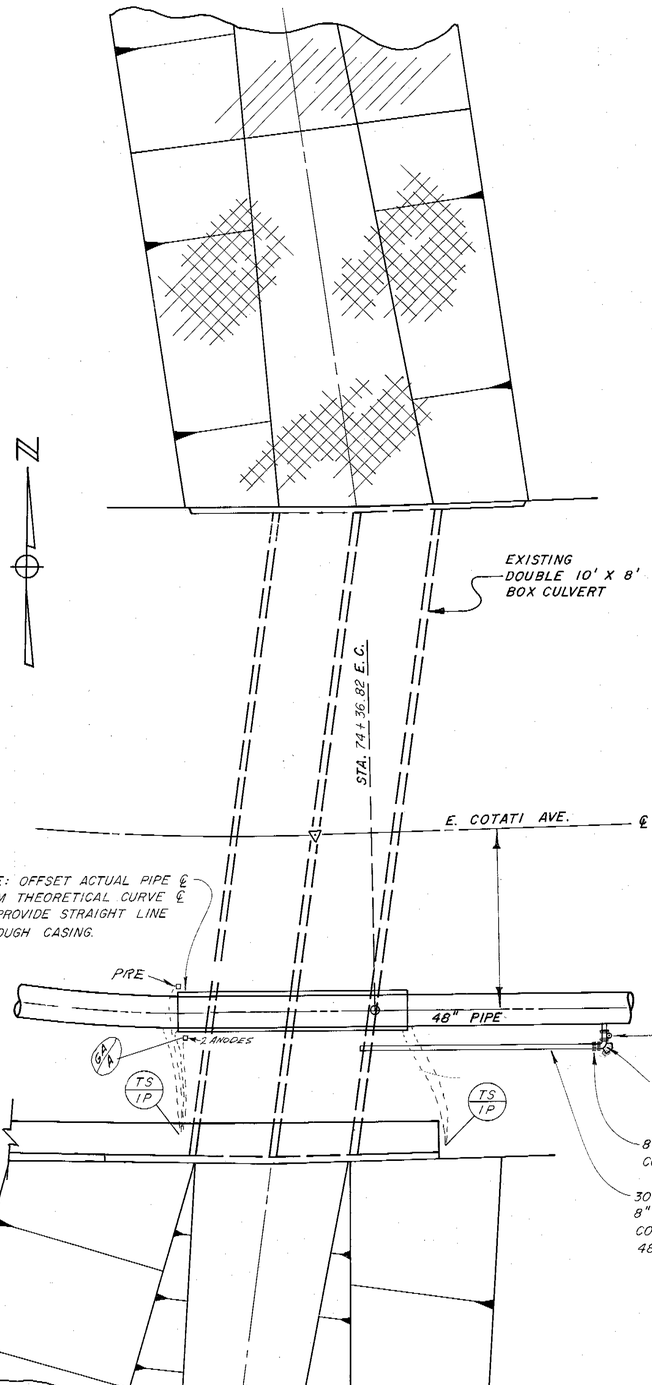

PLAN
SCALE: 1" = 10'

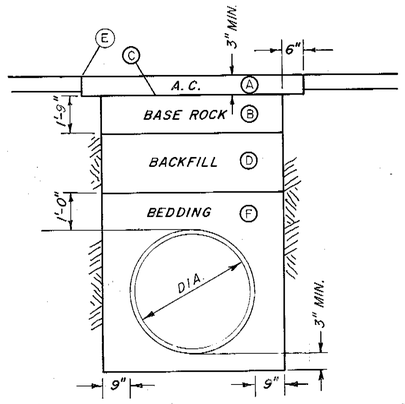

NOT TO SCALE
CLASS A

BEDDING & BACKFILL IN ROAD OR SHOULDER

- (A) REPLACE EXISTING SURFACE WITH ASPHALTIC CONCRETE CONFORMING WITH SECTION 302-5 STD. SPECS.*
- (B) CLASS 2 AGGREGATE BASE CONFORMING WITH SECTION 200-2 STD. SPECS.*
- (C) RS-1 EMULSIFIED ASPHALT
- (D) STRUCTURE BACKFILL MATERIAL COMPACTED TO 95% WITHIN 3' OF FINISHED GRADE, 90% BELOW.
- (E) ROADWAY PAVEMENT TO BE SAW-CUT & REMOVED FOR 6" EACH SIDE OF TRENCH.
- (F) BEDDING CONFORMING WITH THE SPECIAL PROVISION (SAND EQUIVALENT OF 30 OR BETTER) COMPACTED TO 90%.

* THE THICKNESS OF ASPHALTIC CONCRETE AND UNTREATED ROCK BASE SHOWN FOR CLASS "A" BACKFILL AND TRENCH SURFACING ARE THE MINIMUM THICKNESS PERMITTED. WHERE THE EXISTING PAVEMENT AND/OR ROCK BASE IS THICKER THAN THE MINIMUM IT SHALL BE REPLACED TO THE EXISTING THICKNESS. STA. 57+55 TO STA. 112+89 CLASS 2 AGGREGATE BASE SHALL BE 1'-11" THICK.

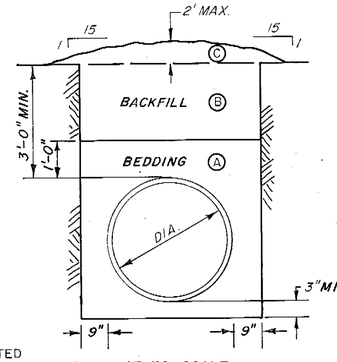

NOT TO SCALE
CLASS D

BEDDING & BACKFILL IN FIELD

- (A) EXCAVATED OR IMPORTED MATERIAL PER SPECIAL PROVISIONS COMPACTED TO 80%.
- (B) BACKFILL: EXCAVATED OR IMPORTED MATERIAL MINIMUM COMPACTION SHALL BE 76%.
- (C) MOUNDING OF NATIVE SPOIL EQUAL TO CONSOLIDATION, EXCEPT AT CROSS SWALES.

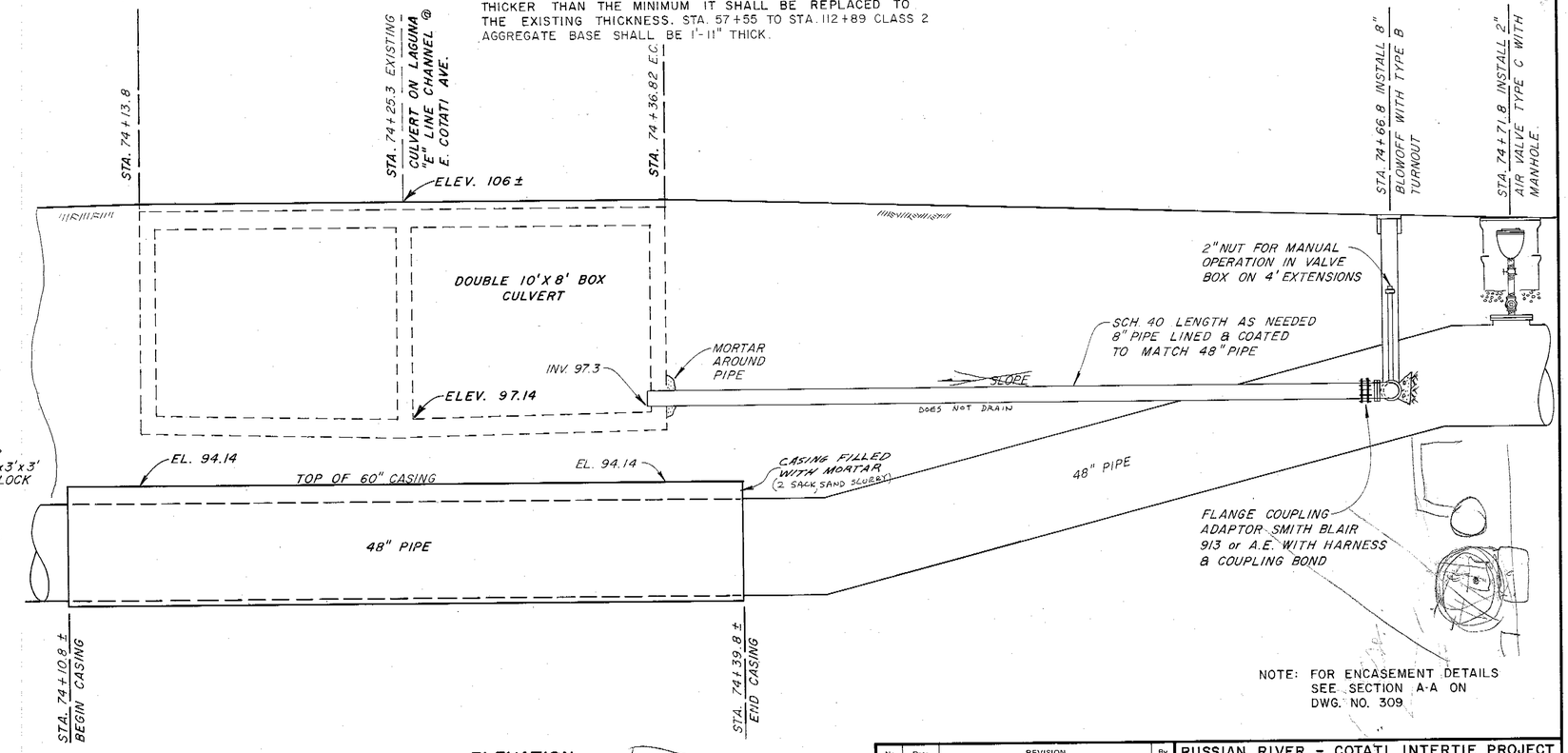

ELEVATION
SCALE: 1" = 3'

NOTE: FOR ENCASEMENT DETAILS SEE SECTION A-A ON DWG. NO. 309

Return to Index

No.	Date	REVISION	By
		AS BUILT 5-16-77	

RUSSIAN RIVER - COTATI INTERTIE PROJECT

BEDDING - BACKFILL & LAGUNA XING

SCALE: AS SHOWN | APPROVED CHIEF ENGINEER | DRAWN sfm

DATE: JULY 8, 1975 | RE 8271 | CHECKED

SONOMA COUNTY WATER AGENCY

DESIGNED | SUBMITTED | DRAWING NUMBER 60-4-102.308

SHEET NO. 8

MICROFILMED

PRINT

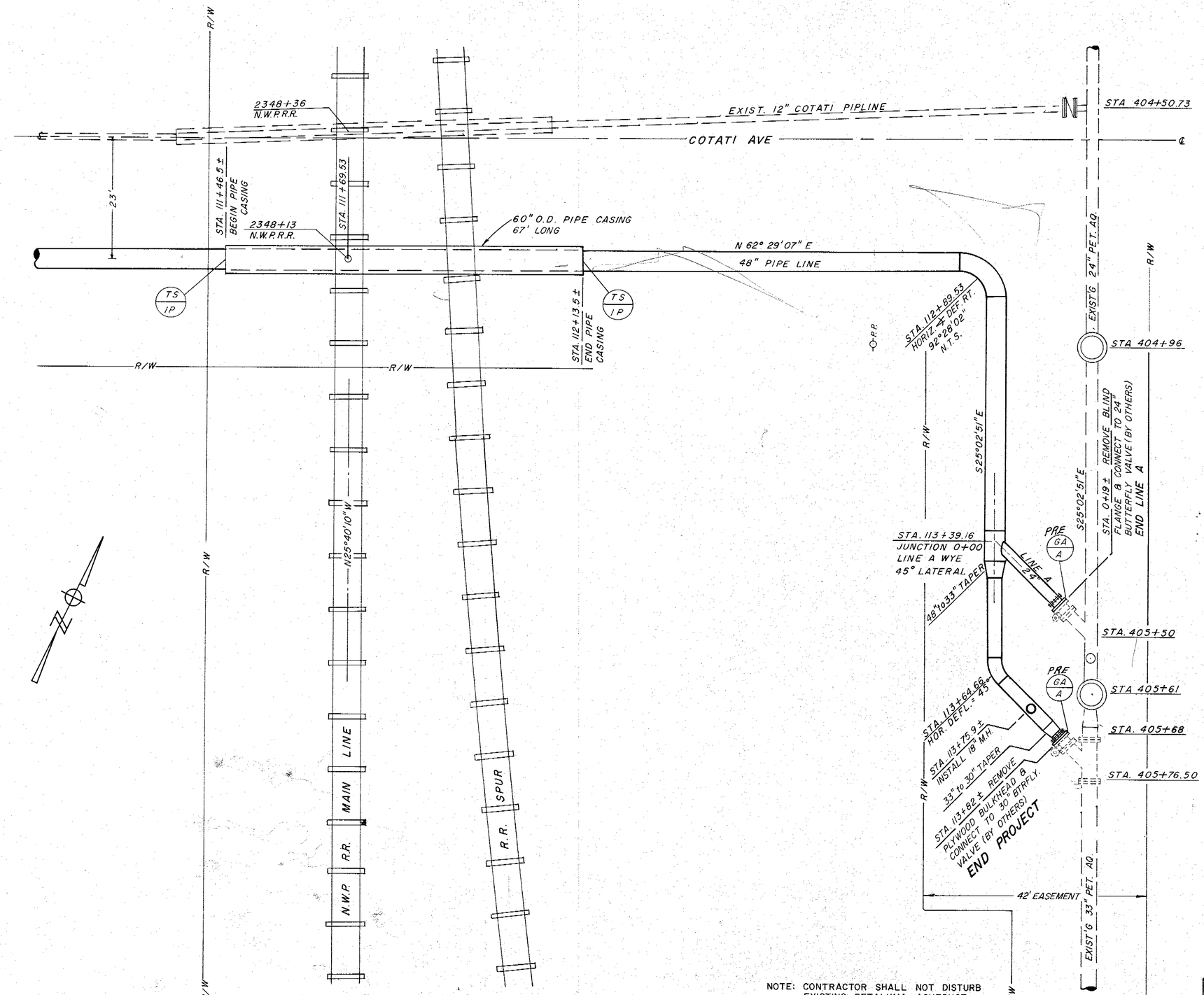

PLAN
SCALE: 1"=10'

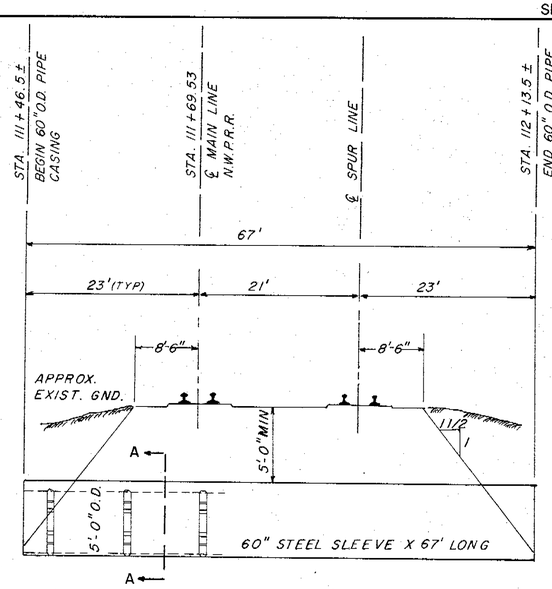

PIPE CASING PROFILE
HORIZ. SCALE: 1"=10'
VERT. SCALE: 1"=5'

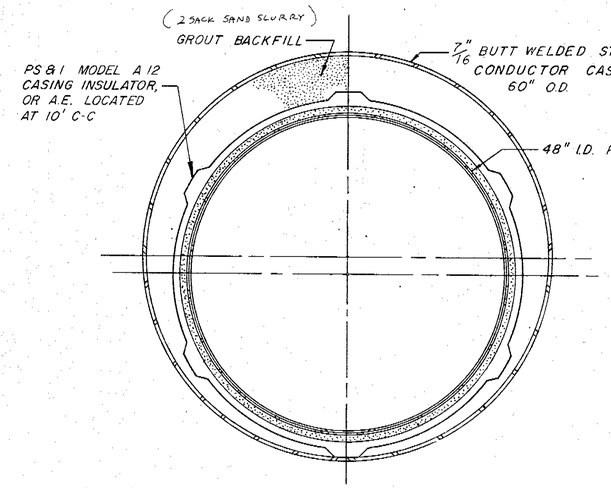

TYPICAL SECTION A-A
STEEL ENCASEMENT
NO SCALE

NOTE: ALL JOINTS OF PIPELINE WITHIN CASING SHALL BE WELDED.

NOTE: CONTRACTOR SHALL NOT DISTURB EXISTING PETALUMA AQUEDUCT UNTIL PERMISSION IS GRANTED BY THE ENGINEER

Return to Index

No.	DATE	REVISION	By
		AS BUILT Date 5-16-77 By Dan W. Mills	

RUSSIAN RIVER – COTATI INTERTIE PROJECT

R.R. XING & PET. AQU. CONNECTION

SCALE: AS SHOWN
DATE: JULY 9, 1975
APPROVED Parker W. Mills CHIEF ENGINEER
DRAWN sfm
CHECKED

SONOMA COUNTY WATER AGENCY

DESIGNED DE Schuler
SUBMITTED
DRAWING NUMBER 60-4-102.309

SHEET NO. 9

MICROFILMED

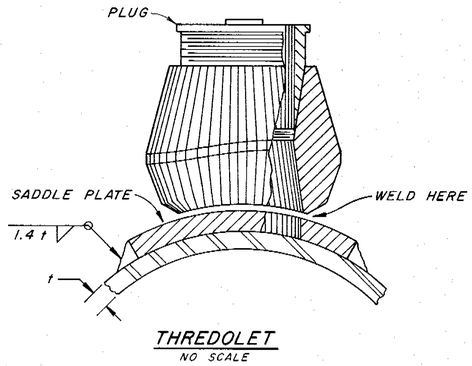

THREDOLET
NO SCALE

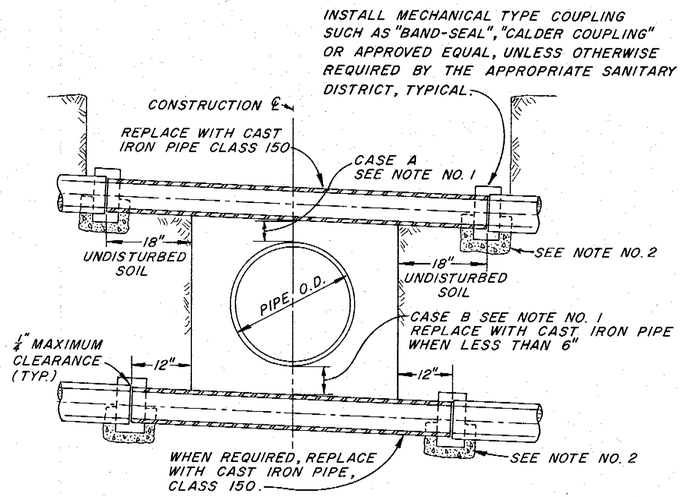

MAIN LINE SEWER

GENERAL NOTES - SEWER

1. PROVIDE MINIMUM CLEARANCE WHEN REQUIRED BY THE APPROPRIATE SANITARY DISTRICT. IF MINIMUM CLEARANCE IS NOT POSSIBLE, THEN USE CASE C OR D.
2. PLACE CLASS 4B 2000 CONCRETE.
3. THE WORK SHALL BE DONE TO THE SATISFACTION AND SPECIFICATIONS OF THE APPROPRIATE SANITARY DISTRICT.
4. ALL PIPES SHALL MATCH INTERNAL DIAMETER OF EXISTING PIPE AND SHALL HAVE A MINIMUM SLOPE OF 1%.
5. ALL BENDS SHALL BE LONG RADIUS BENDS UNLESS SPECIFIED OTHERWISE.
6. ALL PIPES AND FITTINGS SHALL BE FOR SANITARY SEWER SERVICE. CAST IRON SHALL BE CEMENT LINED.
7. REPLACE CONNECTIONS WITH 4" CLASS 2400 A.C.P. SUPPORTED BY 2"x6" REDWOOD BRIDGE ACROSS TRENCH AND MAIN LINE SEWERS WITH CLASS EQUAL TO, OR GREATER THAN EXISTING SEWER PIPE.
8. WHEN REQUIRED TO GO BEYOND PROPERTY LINE TO OBTAIN REQUIRED GRADE, AGENCY WILL OBTAIN RIGHT OF WAY AND CONTRACTOR SHALL RELOCATE SEWER LATERAL.

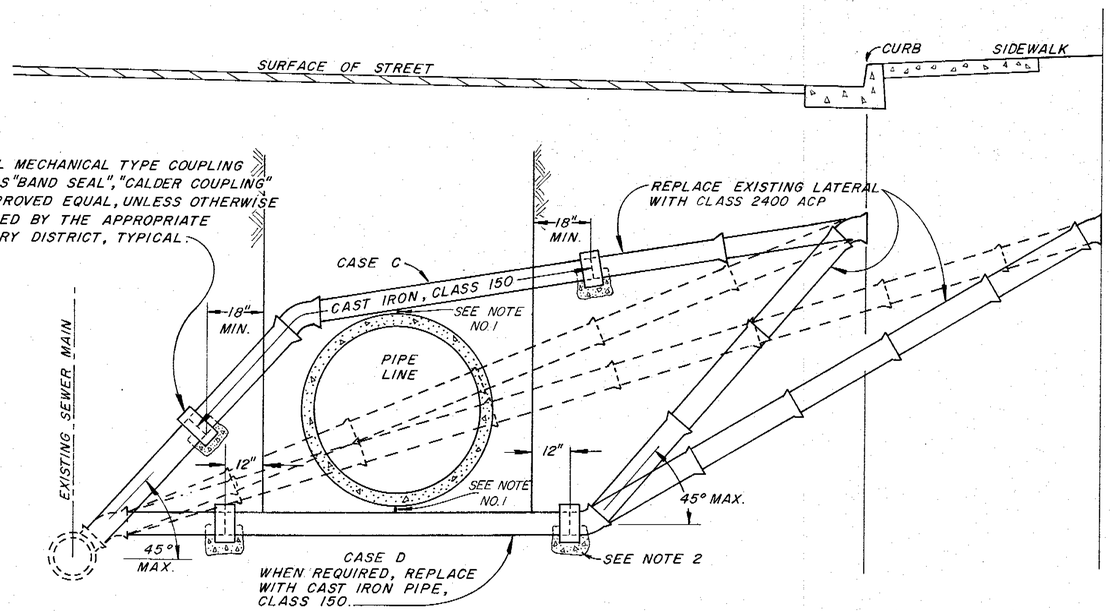

SEWER SERVICE

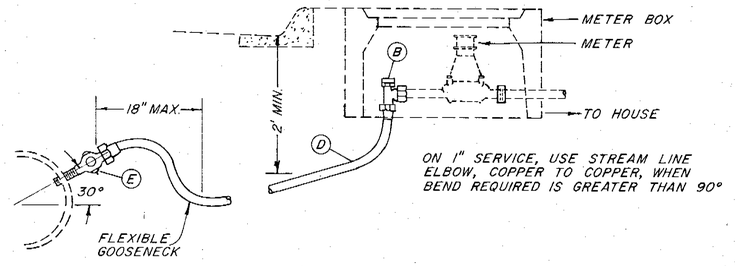

3/4" OR 1" SERVICE

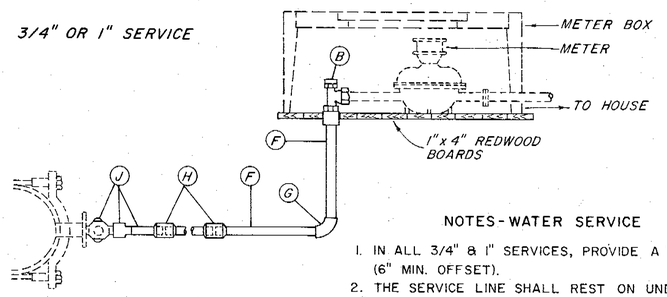

1-1/2" OR 2" SERVICE

NOTES - WATER SERVICE

1. IN ALL 3/4" & 1" SERVICES, PROVIDE A "GOOSENECK" (6" MIN. OFFSET).
2. THE SERVICE LINE SHALL REST ON UNDISTURBED EARTH IN THE BOTTOM OF THE TRENCH WITH A 24" MIN. COVER (BETWEEN MAIN & CURB LINE).
3. COPPER TUBING SHALL CONFORM TO THE REQUIREMENTS OF THE CURRENT A.S.T.M. STANDARD SPECIFICATIONS FOR COPPER WATER TUBE (SERIAL DESIGNATION B88) TYPE K.
4. 3/4" & 1" COPPER PIPE SHALL BE ANNEALED & HAVE A ROCKWELL HARDNESS NOT GREATER THAN 50F. 1-1/2" & 2" SHALL BE DRAWN & HAVE & HARDNESS WITHIN THE RANGE OF 87F TO 97F.

ITEM	MATERIAL	SIZE OF SERVICE			
B	ANGLE METER STOP MUELLER H-14255	3/4"	1"	1-1/2"	2"
D	COPPER PIPE	3/4"	1"		
E	CORPORATION STOP - INCL. TIP NUT	3/4"	1"		
F	COPPER PIPE			1-1/2"	2"
G	STREAM LINE ELBOW - COP. TO COP.			1-1/2"	2"
H	STREAM LINE COUPLING			1-1/2"	2"
J	JOINT COPPER-INCL. COPPER PIPE, CORPORATION STOP & TIP NUT			1-1/2"x24" 1-1/2"x2"	2"x24" 2"

WATER SERVICE

Return to Index

No.	DATE	REVISION	By
		AS BUILT 5-16-77 Donald R. Ellis	

RUSSIAN RIVER - COTATI INTERTIE PROJECT

MISCELLANEOUS DETAILS

SCALE: NONE | APPROVED CHIEF ENGINEER Gordon W. Miller R.E. 8271 | DRAWN L.V. | CHECKED

DATE: JULY 10, 1975

SONOMA COUNTY WATER AGENCY

DESIGNED R.E. Schuler | SUBMITTED | DRAWING NUMBER 60-4-102.310

SHEET NO. 10

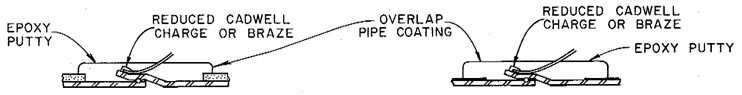

MORTAR COATED STEEL PIPE

COAL TAR COATED STEEL PIPE

CONNECTION DETAILS

ALTERNATE TO CALDWELL PROCESS: CONNECT ANODE LEAD TO BONDING ROD WITH PENN UNION S-2 SPLIT BOLT CONNECTORS.

NOTES-CONNECTION DETAILS

1. WHERE POSSIBLE, SHIFT CONNECTION TO NEAREST PIPE JOINT. ALLOW 12" LOOP AS SLACK AT PIPE CONNECTION.
2. MIX EPOXY PUTTY (EPOXYBOND PLUMBER SEAL) AS DIRECTED & APPLY FIRMLY TO PROVIDE A WATER-TIGHT SEAL AT LEAST 1/4" THICK OVER PIPE COATING. OVERLAP COATING & WIRE INSULATION BY 1/2"

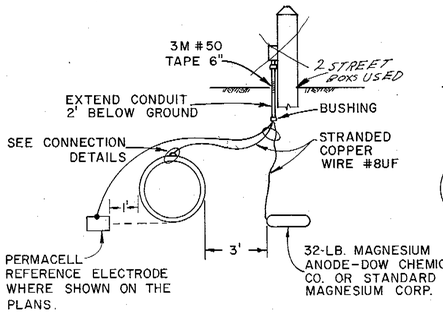

TYPE A GALVANIC ANODE WITH ELECTROLYSIS TEST LEAD INSTALLATION

NOTES-
1. CLEARANCE SHALL NOT BE LESS THAN 3'.
2. TERMINATE LEADS IN CONDUIT TEST OUTLET.
3. ANODE IS TO BE INSTALLED HORIZONTALLY AND SHALL BE LEVEL WITH THE INVERT OF THE PIPE.

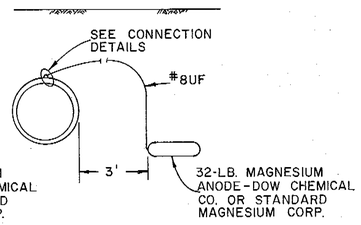

TYPE B GALVANIC ANODE WITHOUT TEST LEAD INSTALLATION

NOTES-
1. ALTERNATE CONNECTION IN RESTRICTED SURFACE ACCESS CONDITIONS

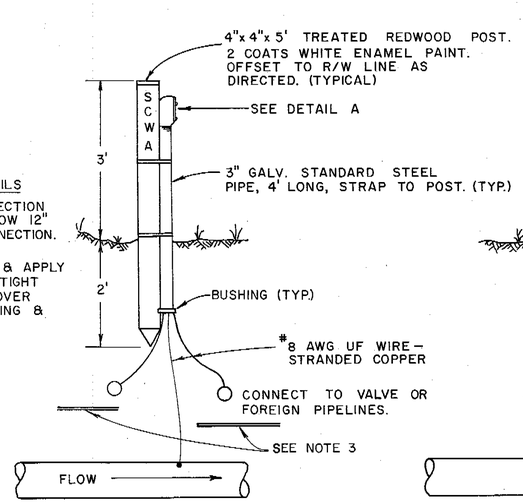

ONE POINT STATION TYPE A

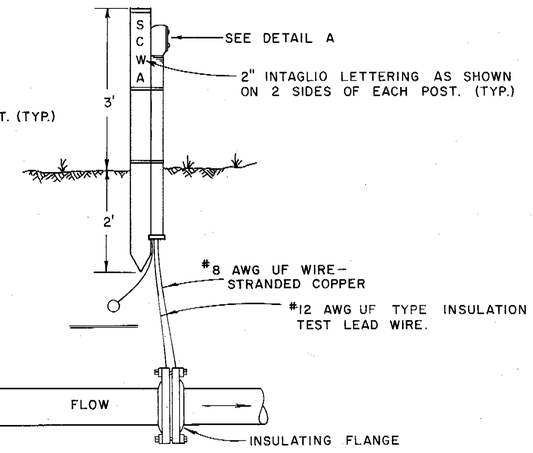

TWO POINT STATION TYPE A

2 AT PETALUMA AQD.
1 AT STA. 39+87

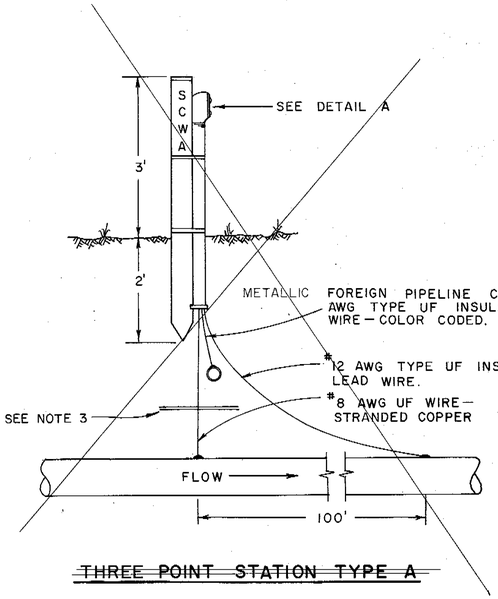

~~THREE POINT STATION TYPE A~~

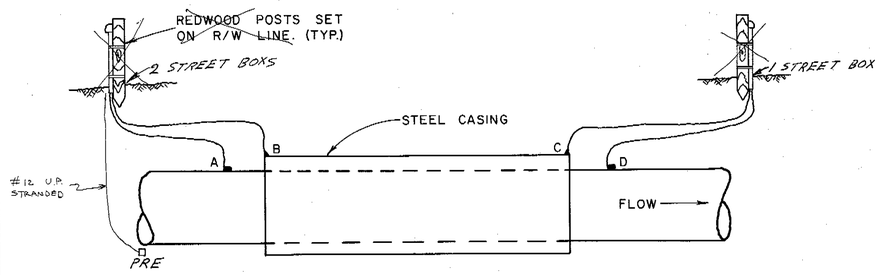

ENCASEMENT STATION

NOTE 1. A AND B-#12 AWG TYPE UF INSULATION TEST LEAD WIRE STRANDED COPPER.
2. C AND D-#8 AWG UF WIRE STRANDED COPPER
3. ENCASEMENT LEADS-YELLOW.

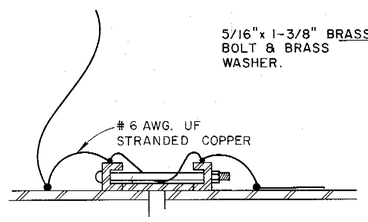

COUPLING BOND

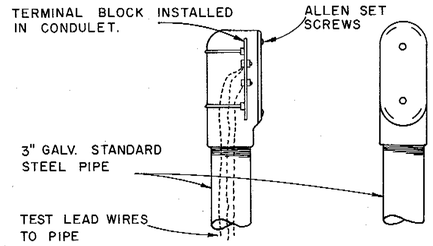

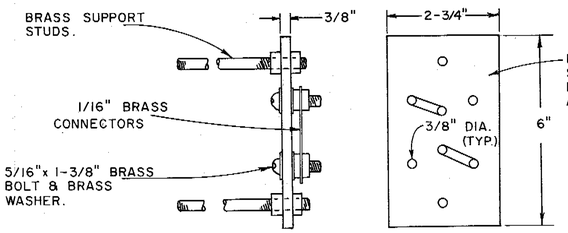

DETAIL A

NOTE: TEST STATION UNIT SHALL BE INSTALLED COMPLETE WITH MICARTA TERMINAL BLOCK, BRASS HARDWARE, CONDULET, COVER & RUBBER GASKET.

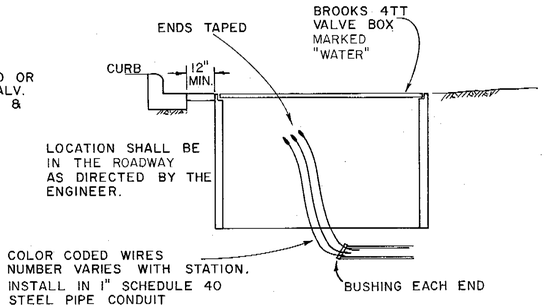

STREET INSTALLATION

NOTES:

1. COLOR CODE:

AQUEDUCT PIPELINE
WHITE - DOWNSTREAM
YELLOW - MIDPOINT
BLACK - UPSTREAM

FOREIGN PIPELINE CROSSINGS
BLUE - GAS
GREEN - WATER
RED - SEWER PRESSURE MAIN
ORANGE - UNIDENTIFIED PIPELINE

TERMINAL POST WASHERS
SHALL BE PAINTED SAME COLOR AS LEAD WIRES.

2. LEAD WIRES
LENGTH AND SIZE OF EACH WIRE SHALL BE MEASURED AND STAMPED ON A METAL TAG AFFIXED TO THE WIRE TERMINAL POST. WHERE UF WIRE IS NOT AVAILABLE IN COLORS, COLOR CODE SHALL BE INDICATED BY COLOR TAPE AT TERMINALS.
3. WHEN CLEARANCE BETWEEN FOREIGN PIPELINE IS LESS THAN 12", INSERT SQUARE SHEET OF LAMINATED PHENOLIC PLASTIC 1/4" THICK WITH LENGTHS EQUAL TO THE O.D. OF THE LARGER PIPE OR 18" WHICH EVER IS LARGER. INSTALL 32 LB. MAGNESIUM ANODE EACH SIDE OF AGENCY PIPELINE PER STREET INSTALLATION DETAIL.
4. NO TEST LEAD CONNECTIONS SHALL BE MADE TO METALLIC FOREIGN PIPELINES. DRAPE 3' OF EXTRA CABLE AT POINT OF CROSSING FOR CONNECTION BY OTHERS.
5. GALVANIC ANODE TYPE-A TO BE INSTALLED AT 2,000' INTERVALS.

No.	DATE	REVISION	By
		AS BUILT Date 5-16-77 By: D. R. Wells	

RUSSIAN RIVER COTATI INTERTIE PROJECT
GALVANIC ANODES AND ELECTROLYSIS TEST STATIONS

SCALE: NONE | APPROVED CHIEF ENGINEER | DRAWN STM
DATE: JULY 11, 1975 | Yoder W Wells | CHECKED

SONOMA COUNTY WATER AGENCY

DESIGNED R.E. Schuler | SUBMITTED | DRAWING NUMBER WA-1

Return to Index

SHEET NO. 11

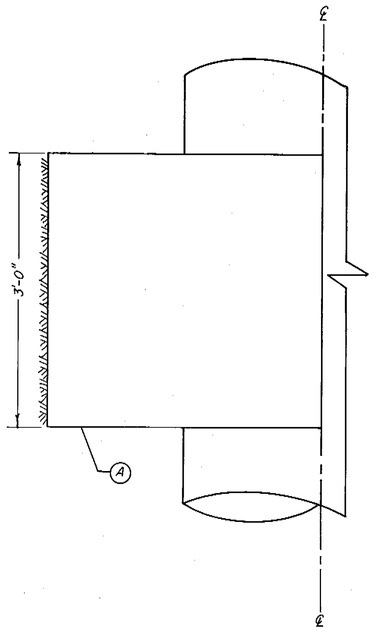

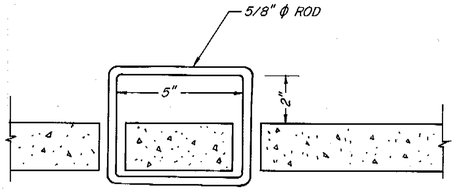

HANDLE DETAIL

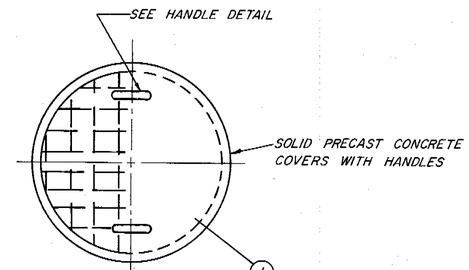

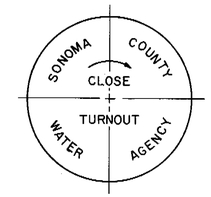

CAST IRON COVER

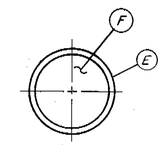

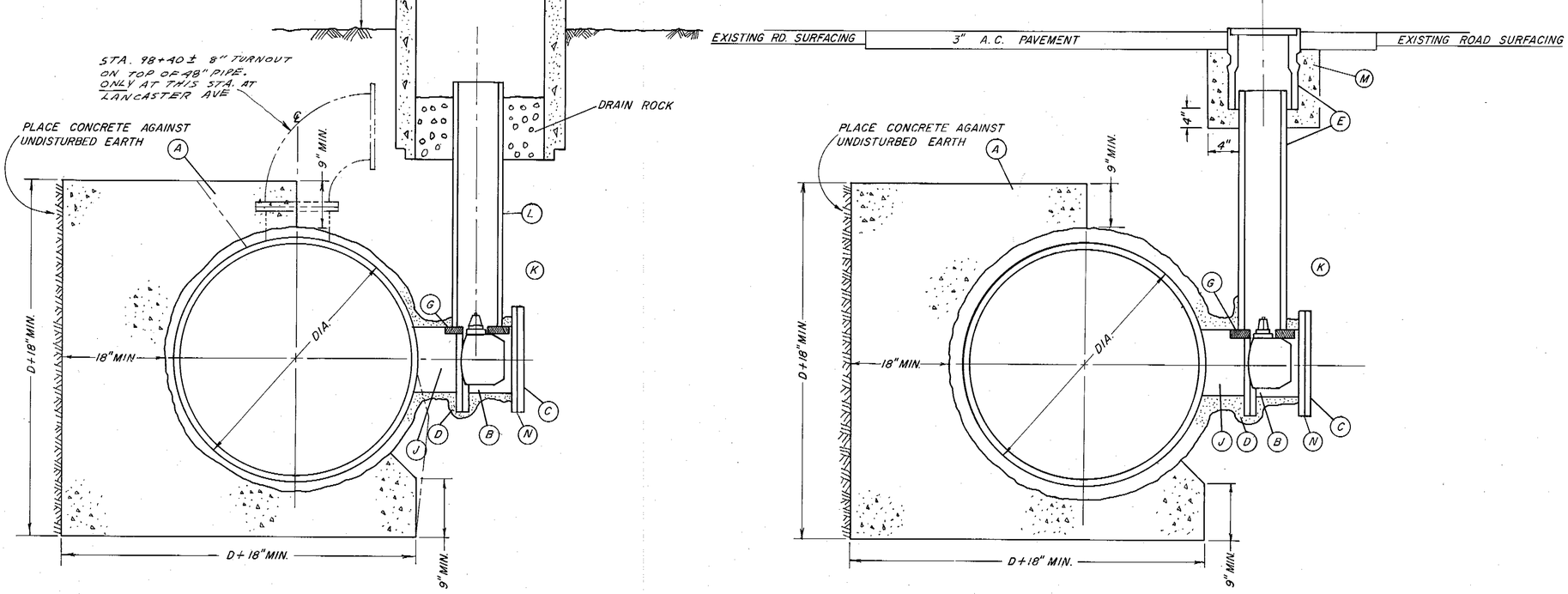

TURNOUT TYPE A

IN AGENCY RIGHT OF WAY

TURNOUT TYPE B

IN ROADWAYS

DISCRIPTIONS

A	CONCRETE THRUST BLOCK- CLASS 4B2000 - PLAIN CONCRETE
B	BUTTERFLY VALVE W/ OPERATOR FLANGED RUBBER SEAT, SHORT BODY.
C	BLIND FLANGE, PAINT FLANGE AND BOLTS AFTER INSTALLATION WITH COAL TAR EPOXY.
D	PAINT SURFACE WITH BITUMASTIC NO. 50, WRAP WITH 18 GAUGE STUCCO NETTING AND PLASTER WITH 1:3 MIX 1 1/2" THICK.
E	TRAFFIC VALVE BOX W/ CAST IRON COVER BROOKS 3RT 8" ACP OR 12" BROOKS EXTENSIONS, BROOKS PRODUCTS INC. OR APPROVED EQUAL.
F	CAST IRON COVER BROOKS 3RT WITH PRINTING AS SHOWN.
G	DOUBLE 2"X6"X12" REDWOOD BLOCKING NOTCHED TO RECEIVE VALVE STEM. PRECAST CONCRETE BASE 12"X12"X1 1/2" MAY BE SUBSTITUTED.
H	CONCRETE IRRIGATION PIPE 24"X4'0" GROOVE END UP FOR LID.
I	CONCRETE PRECAST LID OF ASBESTOS CEMENT W/ 2 HANDLES 5/8"Ø REINFORCED WITH 6"X6"X10GA. MESH WITH 1/4"Ø ROD AROUND LID EDGE. PRINTING AS SHOWN.
J	TURNOUT TEE TO BE FABRICATED BY PIPE MANUFACTURER. LOCATE 8" MIN. FROM RUBBER GASKET JOINT. COATING SAME AS PIPELINE COATING.
K	SAND BACKFILL TO 12" OVER TOP OF VALVE. CONTINUE BACKFILL AND COMPACTION AS REQUIRED FOR LOCATION
L	8" ACP OR 12" BROOKS EXTENSIONS OR APPROVED EQUAL.
M	CONCRETE PAD CLASS 4B 2000
N	2-POINT TEST STATION REQUIRED WITH INSULATION GASKET. NOT REQUIRED FOR BLIND FLANGE INSTALLATIONS.

NOTES:

1. PRESSURE. RATINGS OF EQUIPMENT SHOWN SHALL BE NO LESS THAN THE WORKING PRESSURE (IN FEET OF HEAD) INDICATED ON THE PROFILE DRAWINGS.

Return to Index

No.	Date	REVISION	By
		AS BUILT Date 5-16-77 By: [signature]	

RUSSIAN RIVER—COTATI INTERTIE PROJECT

DISTRIBUTION TURNOUTS TYPE A AND TYPE B

SCALE: NONE | APPROVED CHIEF ENGINEER [signature] R.E. 8271 | DRAWN sfm

DATE: JULY 12, 1975 | CHECKED [signature]

SONOMA COUNTY WATER AGENCY

DESIGNED R.E. Schuler | SUBMITTED [signature] | DRAWING NUMBER WA-2

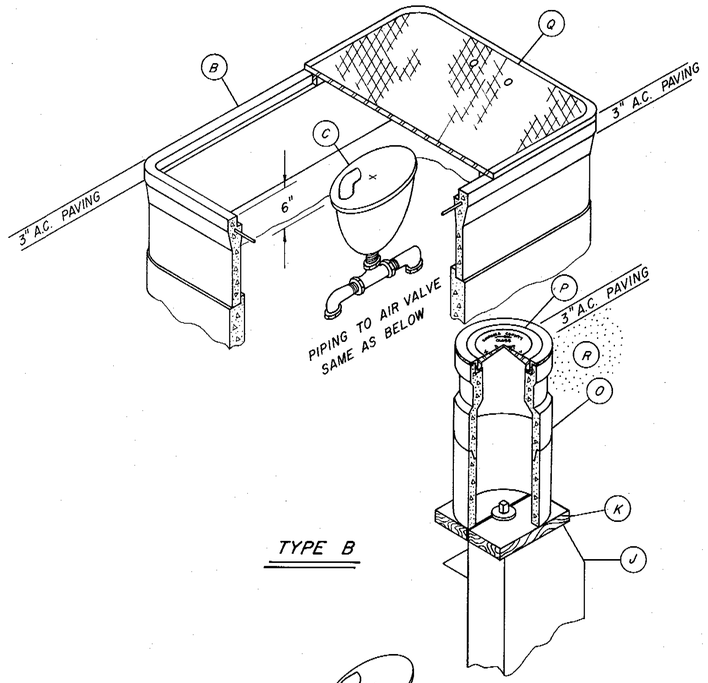

TYPE B

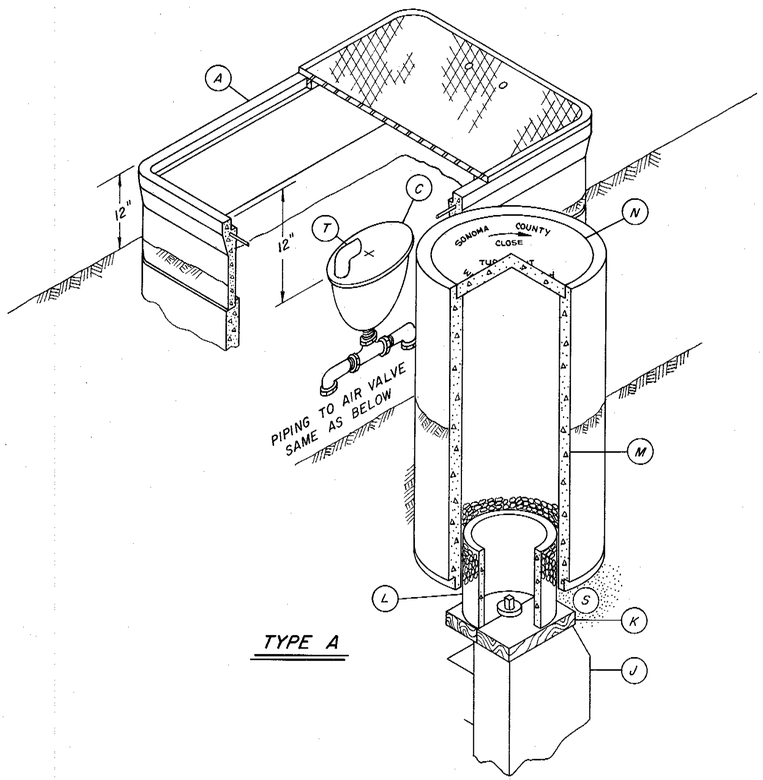

TYPE A

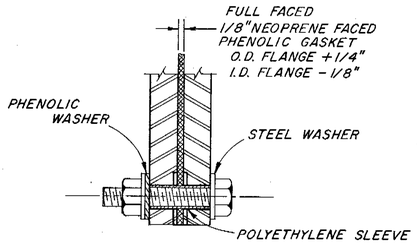

DETAIL
INSULATED FLANGE JOINT
INSTALL AT ONE FLANGE ONLY
(INSTALL INSULATED GASKET SET ONLY WHEN CALLED FOR ON PLAN & PROFILE)

A	METER BOX SERIES 68 BROOKS OR A.E., STACKED WITH NON-TRAFFIC LID WITH SIX 3/4" VENT HOLES EQUALLY SPACED. USE REDWOOD OR CONCRETE SUPPORT BLOCKS (2-2"x6"x24")
B	METER BOX SERIES 68 BROOKS OR A.E., STACKED WITH TRAFFIC LID. USE REDWOOD OR CONCRETE SUPPORT BLOCKS (2-2"x6"x 24")
C	2" AIR VALVE
D	2" CLOSE NIPPLE
E	2"BRONZE GATE VALVE CRANE NO. 472 OR A.E.
F	2" UNION COUPLING
G	2" GALVANIZED ELBOW
H	2" THREDOLET BY PIPE MANUFACTURER.
I	2" CORPORATION STOP, BRONZE BODY CRANE NO.320 OR A.E.
J	MAIN LINE BUTTERFLY VALVE WITH OPERATOR, FLANGED, RUBBER SEAT, SHORT BODY.
K	DOUBLE 2"x6"x12" REDWOOD BLOCKING NOTCHED TO RECEIVE VALVE STEM. PRECAST CONCRETE PADS 12"x12"x1 1/2", MAY BE SUBSTITUTED.
L	8" ACP OR 12" BROOKS EXTENSIONS OR A.E.
M	CONCRETE IRRIGATION PIPE 24"x 4'-0" GROOVE END UP FOR LID.
N	CONCRETE PRECAST LID OF ASBESTOS CEMENT WITH 2 HANDLES 5/8" Ø REINFORCED WITH 6"x 6"x 10" Ga. MESH WITH 1/4" Ø ROD AROUND LID EDGE.
O	TRAFFIC VALVE BOX WITH CAST IRON COVER BROOKS 3 RT 8" ACP OR 12" BROOKS EXTENSIONS, BROOKS PRODUCTS INC. OR A.E.
P	CAST IRON COVER BROOKS 3 RT WITH PRINTING AS SHOWN.
Q	TRAFFIC LID WITH SIX 3/4" DIA. HOLES EQUALLY SPACED.
R	SAND BACKFILL TO MEET SPECIFICATIONS
S	SAND BACKFILL TO 12" OVER TOP OF VALVE. CONTINUE BACKFILL AND COMPACTION AS REQUIRED FOR LOCATION.
T	2" 90° GALVANIZED ELBOW
U	2-POINT TEST STATION PER DWG. WA-1

SONOMA COUNTY CLOSE TURNOUT WATER AGENCY

DETAIL FOR WORDING OF CONCRETE & IRON LIDS

NOTES

1. PRESSURE RATINGS OF EQUIPMENT SHOWN SHALL BE NO LESS THAN THE WORKING PRESSURE (IN FEET OF HEAD) INDICATED ON THE PROFILE DRAWINGS.
2. ALL 2". PIPING & FITTINGS SHALL BE GALVANIZED, SCHEDULE 80, UNLESS OTHERWISE SHOWN.

Return to Index

No.	DATE	REVISION	By
		AS BUILT Date 5-16-77 By: Dwight Mills	

RUSSIAN RIVER – COTATI INTERTIE PROJECT
MAIN LINE VALVE TYPE A & B

SCALE: NO SCALE
DATE: JULY 13, 1975
APPROVED CHIEF ENGINEER Gordon W Mills RE 8271
DRAWN sfm
CHECKED

SONOMA COUNTY WATER AGENCY

DESIGNED R.E. Schuler
SUBMITTED
DRAWING NUMBER WA-3

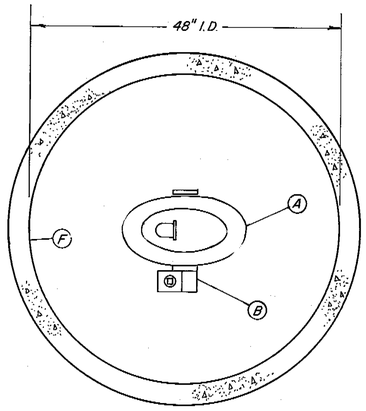

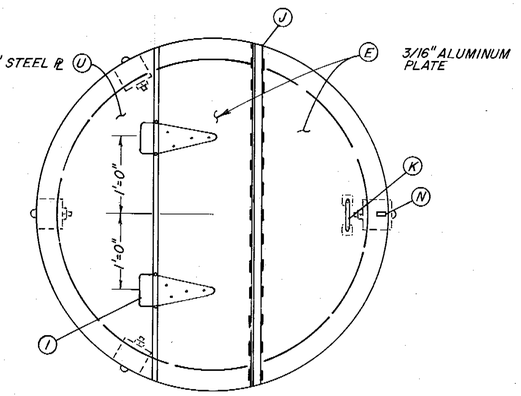

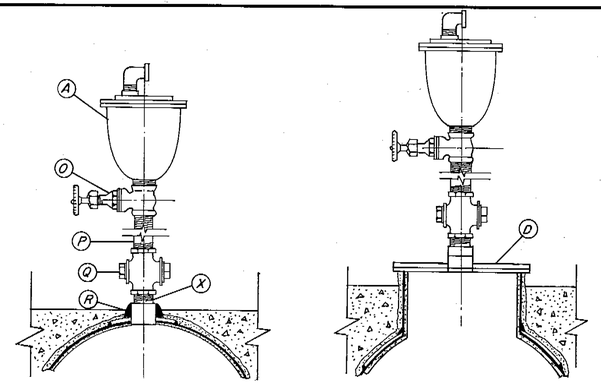

DETAIL A DETAIL B

FOR 2" AIR VALVES
(SAME HOUSING AS 4" REQUIRED)

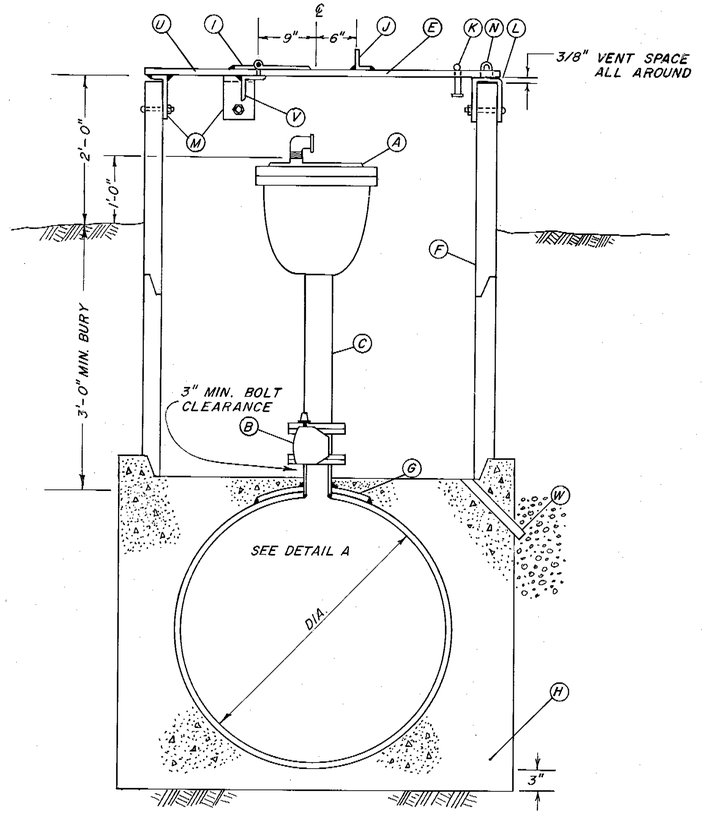

TYPE "A"
AIR VALVE INSTALLATION (4")
WITHOUT MANHOLE
IN AGENCY RIGHT OF WAY

FOR 2" AIR VALVES SEE DETAIL A

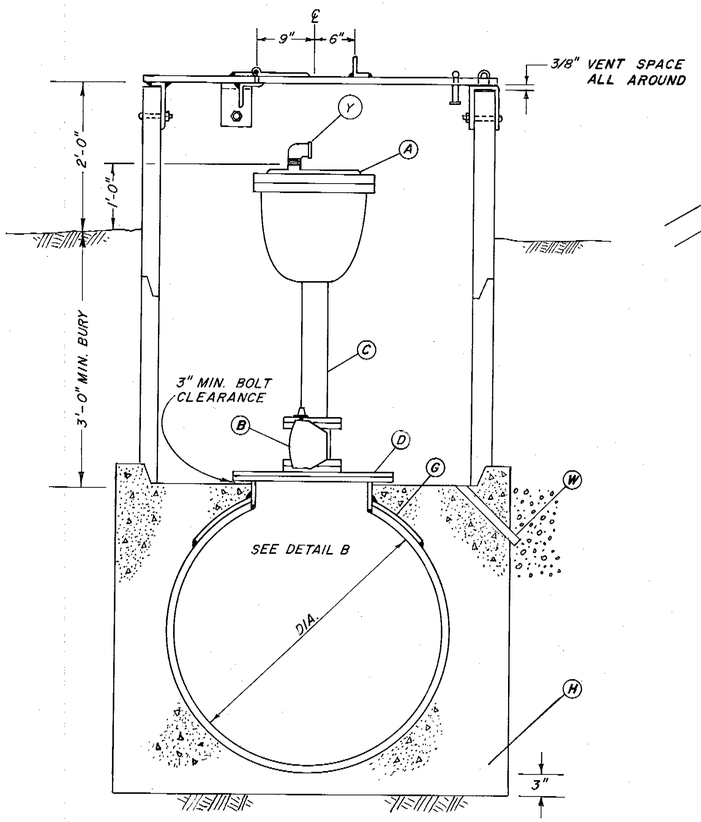

TYPE "B"
AIR VALVE INSTALLATION (4")
WITH MANHOLE
IN AGENCY RIGHT OF WAY

FOR 2" AIR VALVES SEE DETAIL B

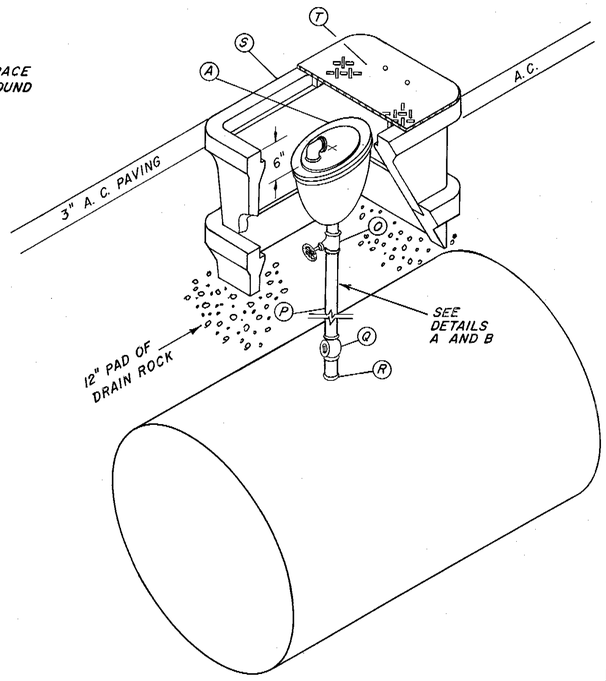

TYPE "C"
AIR VALVE INSTALLATION
FOR ROADWAYS

A	COMBINATION AIR VALVE 2"OR 4" APCO 140 SERIES, OR APPROVED EQUAL.
B	BUTTERFLY VALVE, 4", W/OPERATOR, SHORT BODY, FLANGED, RUBBER SEAT. PRATT – GROUNDHOG B.I.F. MODEL 656, ALLIS-CHALMERS STREAMSEAL OR A.W.W.A. APPROVED OR EQUAL.
C	4" STEEL PIPE WITH S. O. FLANGE
D	18" MANHOLE W/18" S. O. FLANGE & 18" BLIND FLANGE DRILLED & TAPPED FOR 4" OR 2" OUTLET. A.W.W.A. C208 & C207.
E	3/16" ALUM. PLATE FOR PORTION OF COVER.
F	48" I.D. CONCRETE PIPE FOR AIR VALVE INSTALLATION
G	WELD SADDLE PLATE & MANHOLE OR OUTLET SECTION BY PIPE MANUFACTURER. A.W.W.A. C208
H	CLASS 4D2000 CONCRETE 5'X5'X[D+2(9")]
I	8"X4" HEAVY DUTY HINGE, FILLET-WELD TO STEEL PLATE, BOLT TO ALUM. PLATE
J	2-1/2"X1-1/2"X1/4" ALUM. ANGLE, STITCH-WELD 1" ON 4" CENTERS
K	LIFTING HANDLE, 5/8" Ø ROD
L	C 6" LEGS X3"X1/4"X3" STEEL STIRRUP, BOLT TO PIPE WITH 1/2"X5-1/2" BOLT, ALLOW 3/8" MIN. VENT SPACE BETWEEN COVER & PIPE. WELD HASP STAPLE TO 3" SECTION
M	L 6"X3"X3" BRACKET, BOLT AS IN ITEM L-3 REQUIRED
N	CUT 3/8"X1-3/4" SLOT IN COVER PLATE FOR HASP STAPLE
O	2" BRONZE GATE VALVE, CRANE NO. 488 OR A.E.
P	2" PIPE, SCHEDULE 80
Q	2" BRONZE CORPORATION COCK, CRANE NO. 320
R	2" THREDOLET BY PIPE MANUFACTURER.
S	METER BOX SERIES 38 BROOKS OR APPROVED EQUAL STACKED, WITH TRAFFIC LID. USE REDWOOD OR CONCRETE SUPPORT BLOCKS (2-2"X6"X12")
T	TRAFFIC LID SERIES 38 BROOKS. DRILL 6, 3/4"DIA. HOLES EVENLY SPACED
U	3/16"STEEL PLATE FOR PORTION OF COVER
V	L 3"X3"X1/4"X3'-3" STITCH WELD 1" ON 4" CENTERS
W	2" PLASTIC PIPE FLOOR DRAIN WITH 3 CU. FT. OF DRAIN ROCK
X	NIPPLE, SCHEDULE 80
Y	GALVANIZED ELBOW

NOTES

1. PRESSURE RATINGS OF EQUIPMENT SHOWN SHALL BE NO LESS THAN THE WORKING PRESSURE (IN FEET OF HEAD) INDICATED ON THE PROFILE DRAWINGS
2. ALL PIPING, 4" AND SMALLER, SHALL BE GALVANIZED UNLESS OTHERWISE NOTED

Return to Index

No.	Date	REVISION	By
		AS BUILT Date 5-16-77 by David B. Miller	

RUSSIAN RIVER – COTATI INTERTIE PROJECT
AIR VALVE INSTALLATION
TYPE A, B & C

SCALE: NONE | APPROVED CHIEF ENGINEER Gordon W. Mills, RE 8271 | DRAWN RM
DATE: JULY 14, 1975 | CHECKED
SONOMA COUNTY WATER AGENCY
DESIGNED V.E. Schuler | SUBMITTED | DRAWING NUMBER WA-5

SHEET NO. 14

PRINT

STEEL SIGN AND POST

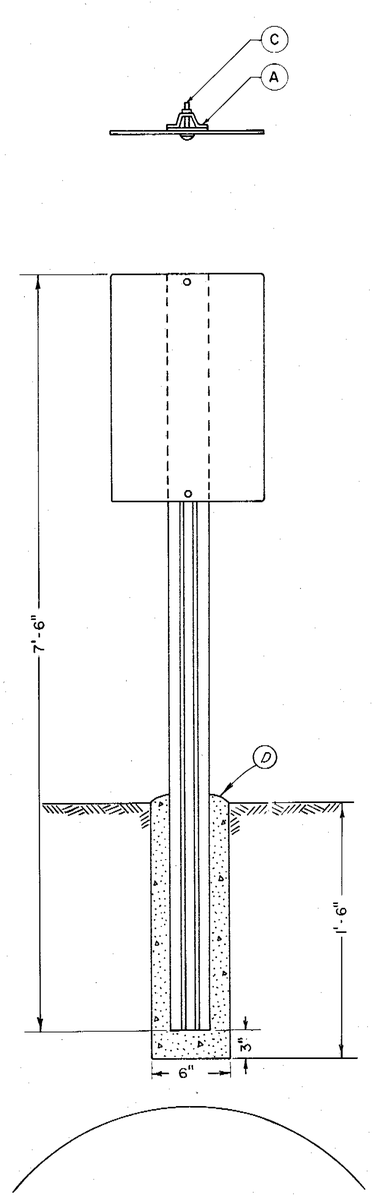

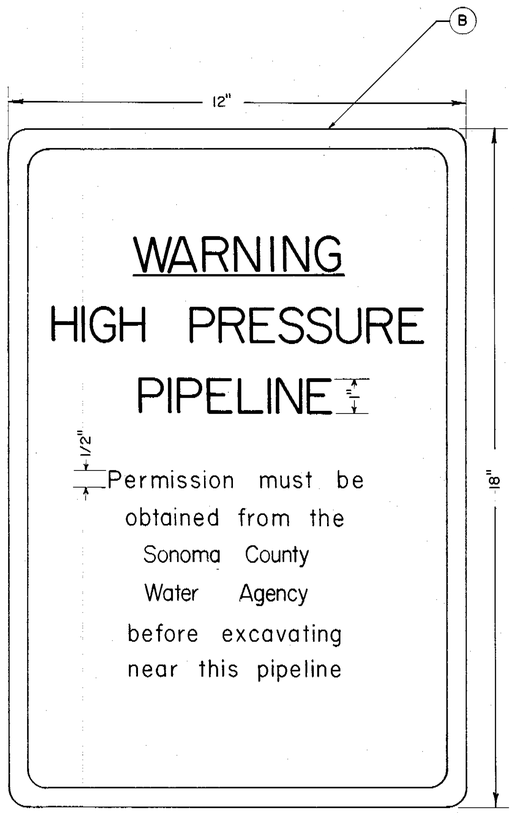

Post placed after backfill and consolidation

D	4-B-2000 concrete footing
C	Two bolts 5/16" x 2 1/4", two 5/16" nuts, two fibre washers, two 1 1/2" x 3" x 1/8" plates
B	Perma sign reflective — 12" x 18", Red on White - Bowman Industries Inc. or A.E.
A	7 1/2' Post — overall width 3 1/16", back thickness 1/8" side thickness .1172", overall depth 1 7/16", flange thickness 1/8", weight 2 lbs. per ft.

Return to Index

No.	DATE	REVISION	By
		AS BUILT Date 5-16-77	

HIGH PRESSURE PIPELINE WARNING SIGN

SCALE: NONE | APPROVED CHIEF ENGINEER | DRAWN SKMc

DATE: JULY 15, 1975 | RE 8271 | CHECKED

SONOMA COUNTY WATER AGENCY

DESIGNED R.E. Schuler | SUBMITTED | DRAWING NUMBER WA-8

SHEET NO. 15