Ellen K. Simpson

AMERICAN CONCRETE CYLINDER PIPE PROJECT

RUSSIAN RIVER AQUEDUCT NO. 1

LOCATION: WOHLER BRIDGE TO THE CITY OF SANTA ROSA - SONOMA COUNTY, CALIF.

OWNER: SONOMA COUNTY FLOOD CONTROL & WATER CONSERVATION DISTRICT.

DESCRIPTION: 42" A.C.C.P. CLASSES 300, 350, 400 & 450 - STA. 0+00.00 TO STA. 167+87.11

INDEX

SHEET NO.		DESCRIPTION
A	—	LOCATION MAP
B-15	-	LAY OUT.
16-32	-	FTTG. DETAILS
33-35	-	SECTION DETAILS
36	-	MAT'L LIST
37	-	FLG DETAILS
38	-	FIELD CUT DETAILS
39	-	PIPE DESIGN DETAILS
40	-	GENERAL NOTES

ENGINEER
GORDON W. MILLER
CHIEF ENGINEER
SONOMA COUNTY FLOOD CONTROL
& WATER CONSERVATION DISTRICT.

CONTRACTOR ENGINEERS LIMITED PIPELINE CO.
11858 SAN PABLO AVE.
EL CERRITO, CALIF.

AMERICAN PIPE AND CONSTRUCTION COMPANY

NORTHERN CALIFORNIA DIVISION
HAYWARD, CALIFORNIA

50-4-102.60AB

F.O. 6348	DRAWING NO. D2-0814	DATE 4/9/58

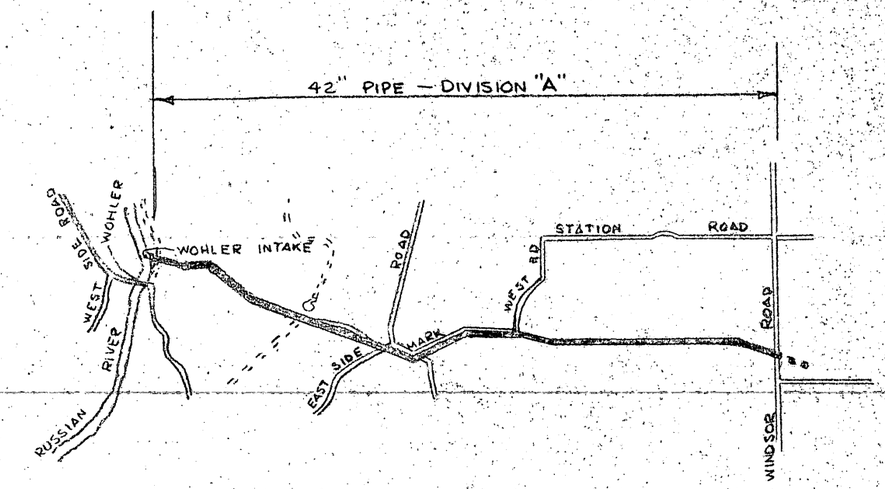

N

50-4-102.61AB

MARK	BY	DATE	REVISION

F.O.6348
DR. BY: HAW
CHECKED
DATE: 4-9-58

RUSSIAN RIVER - DIV. "A"
LOCATION MAP

AMERICAN PIPE & CONSTRUCTION CO.
NORTHERN CALIFORNIA DIVISION - HAYWARD, CALIF.

DWG. NO. D2 - 0814 | SHEET A OF SHEETS

JOIN WITH PC. 5
SHEET NO. 1

CLASS	PIPE OR PIECE NO.	NO OF PIECES	REMARKS	DETAIL ON SHEET NO	SEE FIELD INFORMATION SHEET NO.	DISTANCE SLOPE	DISTANCE HORIZONTAL	STATION	PLAN LOOKING IN DIRECTION OF LAYING	TURN OR PULL	PROFILE NOTE: VIEW FROM RIGHT SIDE OF PIPE	ELEV.	SLOPE ANGLE	SLOPE COSIN. TAN.
CL. 150	4A	1	SPC SHORT SECT.	16		17 73	17 31	1+05 40				101 09		
	↑	↑	SPC 2 CUT ELL RT. & DN.	24A		186	182	0+88 09				97 25	12°-30	976296 +221641
	4	1	HΔ = 18°-06' VΔ = 1°-44' CΔ = 17°-41'			12 95	12 55	0+86 27				96 85		
	2-3	2	STDS			64 00	62 04	0+73 72				93 67		
	↑	↑	SPC 1-CUT ELL UP @ 14°-14'			173	168	0+11 68				77 93		
	1A	1	SEE DWG D2-0826, F/O 6895 FOR DETAILS THIS PC.			10 00	10 00	0+10 00				77 50	14°-14'	969302 +253703
								0+00 00				77 50	0	

NOTE READ UP!

NOTE STD DENOTES STANDARD PIPE VP DENOTES VERTICAL
SPC DENOTES SPECIAL PIPE HP DENOTES HORIZONTAL PULL

MARK	BY	DATE	REVISION
1	HAW	6-11-58	CHANGES IN ALIGN. BY DIST.

F.O. 6348
DR BY HAW | TR BY
CHK BY [illegible] | DATE 6-11-58

LAYOUT SHEET
RUSSIAN RIVER AQUEDUCT
PROJECT #1 DIVISION "A"

AMERICAN PIPE & CONSTRUCTION CO.
NORTHERN CALIFORNIA DIVISION—HAYWARD, CALIF.
DWG. NO. D2-0814 | SHEET 8 OF SHEETS

50-4-102.62AB

CLASS	PIPE OR PIECE NO.	NO OF PIECES	REMARKS	DETAIL ON SHEET NO	SEE FIELD INFORMATION SHEET NO'S.	DISTANCE SLOPE	DISTANCE HORIZONTAL	STATION	PLAN LOOKING IN DIRECTION OF LAYING	TURN OR PULL	PROFILE NOTE: VIEW FROM RIGHT SIDE OF PIPE	ELEV.	ANGLE	COSIN. TAN. SLOPE
42" CLASS 300			CONT'D ON SHT. 2					9+67.40				208.70		
	32	1	SPC 2-CUT ELL DN. VΔ = 15°-27' w/ 8" AIR VALVE TYPE B	24		144 / 8.55	140 / 8.55	9+66.00 PI 8" AV. = 9+63.93	PULL LFT. 0°-17'			208.70	13°-30'	972370 -240000
	25-31	6	STDS			192.18	192.07	9+57.45	PULL EA. 0°-55' LFT.			208.76		
	24-25	2	STDS			64.06	64.02	7+65.38	PULL EA. 0°-55' LFT.			202.23		
	23	1	SPC 1-CUT ELL DN. VΔ = 8°-37'	18		27.13	26.67	7+01.36				200.55		
								7+00.00 PI	PULL LFT. 0°-49'	R = 2000.00 Δ = 25°-07'-40" L = 877.12 T = 445.73		200.00	1°-57'	999421 +033985
	21-22	2	STDS			64.06	62.97	6+73.33	PULL EA. 0°-55' LFT.			195.02		
	20	1	SPC BEVEL UP @ 3°-34'	16		32.03	31.49	6+10.86	PULL LFT. 0°-55' BEVEL UP 3°-34'			183.28	10°-34'	983042 +186494
	15-19	5	STDS			160.15	158.96	5+78.87	PULL EA. 0°-55' LFT.			177.41		
	14	1	SPC BEVEL @ 2°-40' DN.	16		31.82	31.58	4+19.91	PULL LFT. 0°-55' BEVEL DN. 2°-40			157.90	7°-0'	992546 +122738
	12-13	2	STD			64.06	63.15	3+88.93	PULL EA. 0°-55' LFT.			154.02		
42" CLASS 400	11	1	STD			32.03	31.58	3+25.18	PULL LT. 0°-56'			143.27		
	9-10	2	STDS			64.00	63.09	B.C. = 2+96.72 2+93.60				137.89		
	8	1	SPC. BEVEL @ 2°-48' DN.	16		31.82	31.37	2+30.51	BEVEL DN. 2°-48'			127.15	9°-40'	985801 +170218
	5-7	3	STDS			96.00	93.74	1+99.14	PULL DN. 0°-02'			121.81	12°-28'	976422 221052
								1+05.40				101.99		

FOR BEGINING OF LINE, SEE SHT. 8

NOTE READ UP!

NOTE STD DENOTES STANDARD PIPE SPC DENOTES SPECIAL PIPE V.P. DENOTES VERTICAL H.P. DENOTES HORIZONTAL PULL

MARK	BY	DATE	REVISION
1	HAW	6-11-58	CHANGE IN ALIGN. BY DIST.

F.O. 6348
DR BY HAW TR BY
CHK BY DATE 2-28-58

LAYOUT SHEET
RUSSIAN RIVER AQUEDUCT
PROJECT #1 DIVISION A

AMERICAN PIPE & CONSTRUCTION CO.
NORTHERN CALIFORNIA DIVISION—HAYWARD, CALIF.
DWG NO. D2-0814 SHEET 1 OF SHEETS

50-4-102.63AP

CLASS	PIPE OR PIECE NO	NO. OF PIECES	REMARKS	DEVIATION SHEET NO.	SLOPE	HORIZONTAL
			CONT'D ON SH. 3			
42" CLASS 300	58	1	SPC 2-CUT ELL - VΔ = 24°-56' UP w/ Field Closure & 4" M.H. TYPE "C"	23	2 83 PL=10 73	2 76 8 55
	55-57	3	STDS		96 12	94 11
	54	1	SPC BEVEL VΔ = 3°-57' DN	16	31 79	31 12
	50-53	4	STDS		128 16	126 97
	49	1	SPC 1 - CUT ELL DN. VΔ = 15°-13' w/ 6" AIR VALVE TYPE A	29	126 13 79	125 13 67
	46-48	3	STDS		96 12	95 32
	45	1	SPC 1 - CUT ELL - VΔ = 7°-13' DN.	17	19 17 4 08	19 01 3 95
	42-44	3	STDS		96 12	93 00
	41	1	SPC 2-CUT ELL VΔ = 28°-08' UP w/ 4" MAN HOLE TYPE "C"	23	3 15 2 88	3 05 2 80
	40	1	SPC SHORT SECT w/ Field Closure	16	12 11 PL=14 11	11 78
	39	1	STD		32 02	31 14
	34-38	5	STDS		160 15	155 73
	33	1	STD		32 03	31 15
42" CLASS 300	32		SEE SHT. 1			

STATION
16+92 76
16+90 00 P.I. 4"M.H. @ P.I.
16+81 45
15+87 34
15+56 22
14+29 25
14+28 00 6"A.V. 14+27 74
14+14 33
13+19 01
13+00 08 P.I.
12+96 05
12+03 05
12+00 00 P.I. 4' M.H.
11+97 20
11+85 42
11+73 84 = PCC
11+54 28
9+98 55
9+67 40

PLAN
LOOKING IN DIRECTION OF LAYING

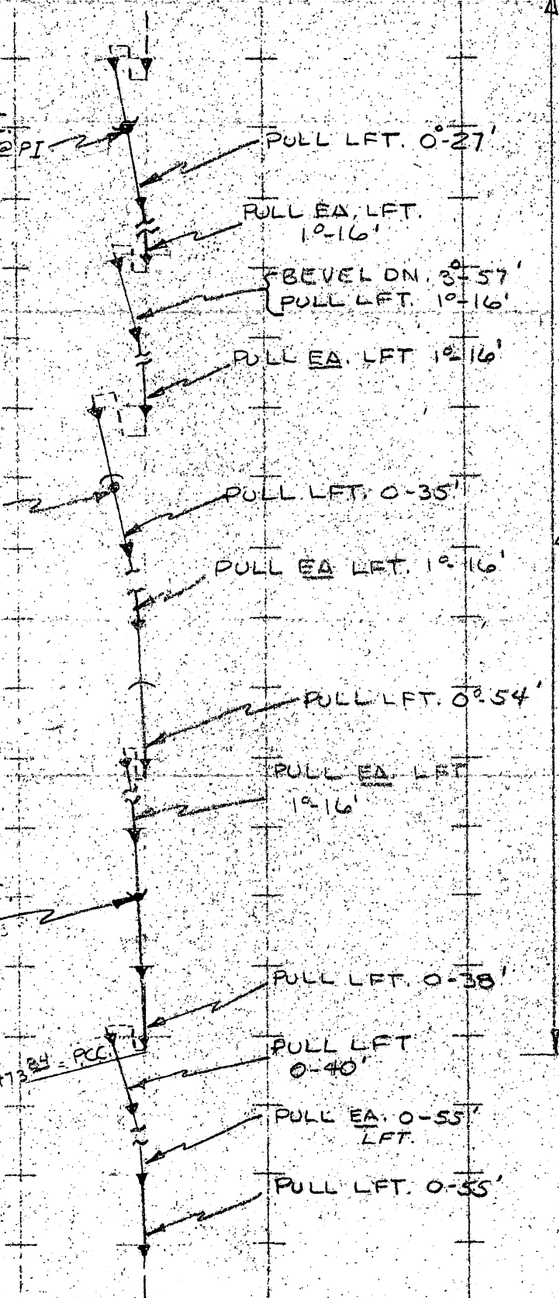

TURN OR PULL
R = 1452 06
Δ = 25°-07'-20"
L = 636 68
T = 323 54

PROFILE
NOTE: VIEW FROM RIGHT SIDE OF PIPE

ELEV.
150 59
150 24
152 02
171 60
178 07
195 47
195 64
193 86
181 47
179 00
177 97
153 68
152 88
153 54
156 37
163 85
201 22
208 70

ANGLE	SLOPE TAN.	SLOPE COSIN.
13°-11'	973645	+234181
11°-45'	979045	+208028
7°-48'	990748	(-)137013
7°-25'	991634	+130000
14°-38'	967562	+261200
13°-30'	972370	-240000

NOTE READ UP!

NOTE STD DENOTES STANDARD PIPE SPC DENOTES SPECIAL PIPE — VP DENOTES VERTICAL, HP DENOTES HORIZONTAL PULL

MARK	BY	DATE	REVISION

F.O. 6348
DR BY HAW TR BY
CHK BY DATE 3-12-58

LAYOUT SHEET
RUSSIAN RIVER AQUEDUCT
PROJECT #1 DIVISION A"

AMERICAN PIPE & CONSTRUCTION CO.
NORTHERN CALIFORNIA DIVISION—HAYWARD, CALIF.
DWG. NO. D2-0814 SHEET 2 OF SHEETS

50-A-107.6448

CLASS	PIPE OR PIECE NO.	NO. OF PIECES	REMARKS	DETAIL ON SHEET NO.	SLOPE DISTANCE	HORIZONTAL DISTANCE	STATION
			CONT'D ON SH. 4				27+68.28
42" CLASS 300	~~90~~ - 92	3	STDS		96.09	96.08	26+72.20
	89 *	1	STD		32.01	32.01	26+40.19
	~~87~~ 85 - 88	4	STDS		128.00	127.99	25+12.20
	84	1	SPC BEVEL @ 2°-13' UP w/ 4" MANHOLE TYPE "C"	32	32.00	32.00	4"MH. 24+81.70
	83	1	STD		32.03	32.02	24+80.20
	82	1	SPC BEVEL @ 2°-19' RT	16	31.92	31.91	24+48.18
	81	1	SPC BEVEL @ 2°-19' RT.	16	31.92	31.91	24+16.27
	~~74~~ ~~79~~ 74 - 80	7	SPC BEVELS @ 2°-19' RT EA.	16	223.44	223.43	23+84.36
	73	1	SPC BEVEL @ 2°-19' RT.	16	31.92	31.92	21+60.93
	72	1	SPC BEVEL @ 2°-19' RT. w/ 6" AIR VALVE TYPE "B"	27	31.92	31.92	21+29.01
	69 - 71	3	SPC BEVELS @ 2°-19' EA. RT.	16	95.76	95.74	20+97.09
	↑	↑	SPC 1-CUT ELL		1.35	1.35	20+01.35
	68 *	1	VΔ = 9°-15 DN. w/ BEVEL 10°-45 RT.	30	25.71	25.29	20+00.00 PI.
	67	1	SPC BEVEL @ 2°-19' RT.	16	31.92	31.39	19+74.71
42" CLASS 350	63 - 66	4	SPC BEVELS @ 2°-19' RT EA.	16	127.68	125.57	19+43.32
	62	1	SPC BEVEL VΔ = 2°-47' DN.	16	31.90	31.38	18+17.73
	59 - 61	3	STDS		96.12	93.59	17+86.35
	58		SEE SH. 2				16+92.76

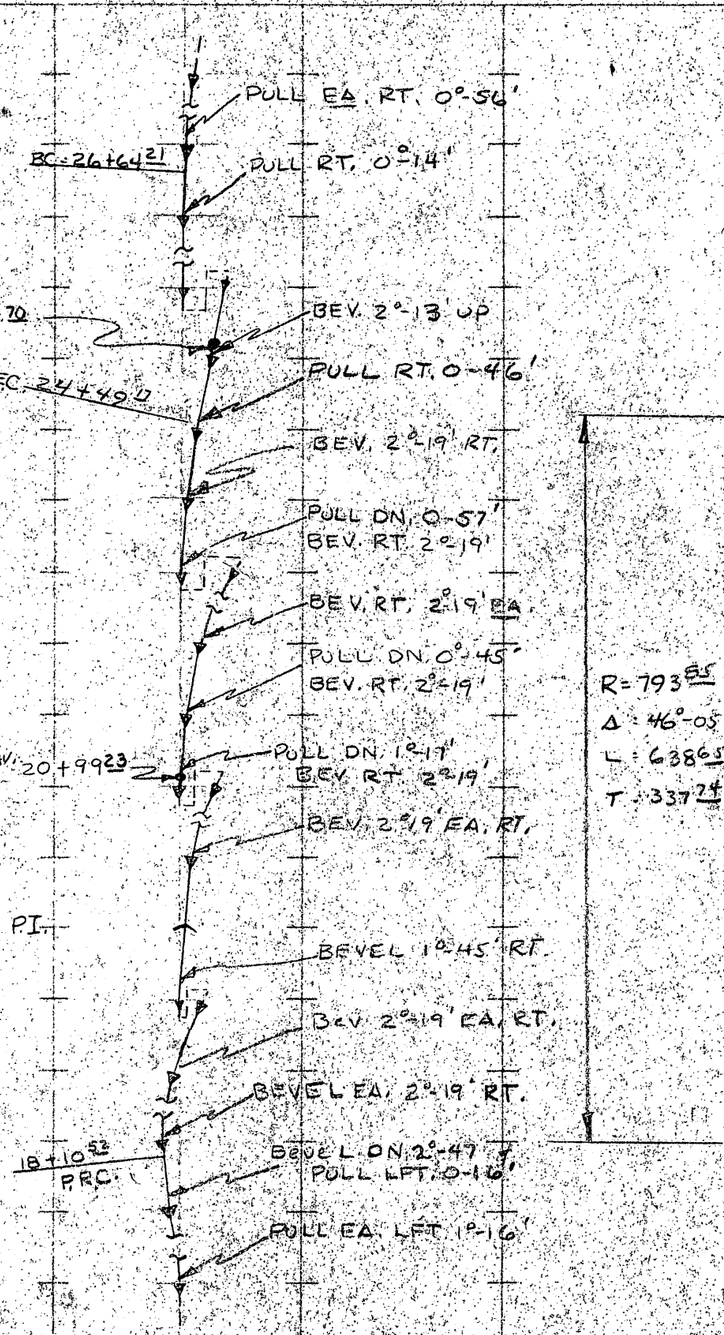

PROFILE NOTE VIEW FROM RIGHT SIDE OF PIPE ELEV.	ANGLE	COSIN. TAN. SLOPE
211.79		
210.71		
210.35		
208.91		
208.55	0-39'	.999936 .011241
209.42		
210.29	1°-34'	.999626 .027326
211.16		
213.53		
213.87	0°-37'	.999942 .010597
213.94	0°-08'	.999997 .002327
212.03	1°-09'	.999799 .020000
212.00		
207.31		
201.60		
178.57	10°-24'	.983571 .183431
172.81		
150.89	13°-11'	.973645 .234181

NOTE READ UP!

NOTE STD. DENOTES STANDARD PIPE V.P. DENOTES VERTICAL
SPC. DENOTES SPECIAL PIPE H.P. DENOTES HORIZONTAL PULL

MARK	BY	DATE	REVISION

F.O. 6348
DR BY HAW TR BY
CHK BY DATE 3-17-58

LAYOUT SHEET
RUSSIAN RIVER AQUEDUCT
NO 1 DIVISION A

AMERICAN PIPE & CONSTRUCTION CO.
NORTHERN CALIFORNIA DIVISION - HAYWARD, CALIF.
DWG. NO. D2-0814 SHEET 3 OF SHEETS

50-4-102.65 AR

CLASS	PIPE OR PIECE NO.	NO. OF PIECES	REMARKS	DETAIL ON SHEET NO.	SLOPE	HORIZONTAL	STATION	PLAN LOOKING IN DIRECTION OF LAYING	TURN OR PULL	PROFILE NOTE VIEW FROM RIGHT SIDE OF PIPE	ELEV.	ANGLE	COSIN. TAN.
			CONT'D ON SH. 5										
42" CLASS 300			SPC 1-CUT ELL		1.39	1.39	32+01.39				213.87		
	109	1	VΔ = 7°-15' DN. w/ 6" AIR VALVE TYPE "B"	21	27.18	26.99	32+00.00 PI 6" AV. 31+96.33	PULL RT. 0°-49'			213.88	0°-24'	999976 -007000
							31+73.01				210.64		
	106-108	3	STDS		96.09	95.40		PULL EA. RT. 0°-56'					
			SPC 2-CUT ELL -		1.62	1.61	30+77.61				199.19		
	105	1	VΔ = 18°-13' DN	22	1.35	1.22	30+76.00 PI				199.00	6°-51'	992862 +120000
	104	1	SPC. SHORT SECT.	16	31.09	28.17	30+74.78	PULL RT. 0°-54'			198.43		
	102-103	2	STDS		64.06	58.03	30+46.61	PULL EA. RT. 0°-56'			185.26		
			SPC 3-CUT ELL VΔ = 46°-35' UP		5.06	4.58	29+88.98				158.14		
	101	1	w/ 6" BLOW OFF TYPE A ALT	26	4.79	4.46	29+84.00 PI 6" B.O. @ PI			R = 2000' Δ = 26°-42'-40" T = 474.82 L = 932.39	156.00	25°-04'	905939 +467391
42" CLASS 350	100	1	SPC SHORT SECT. w/ Field CLOSURE	16	9.68 PL. = 11.68	9.01	29+79.54	Field Closure PULL RT. 0°-31'			157.76		
	98-99	2	STDS		64.06	59.60	29+70.53	PULL EA. RT. 0°-56'			161.31		
			SPC 1-CUT ELL		33.25	30.93	29+10.93				184.81		
	97	1	VΔ = 13°-02' DN.	17	3.65	3.61	28+80.00 PI	PULL 1°-04' RT.			197.00	21°-31'	930311 (-394230
							28+76.39				197.54		
	96	1	STD		32.03	31.68		PULL 0°-56' RT.					
	94-95	2	STDS		64.06	63.36	28+44.71	PULL EA. 0°-56' RT.			202.27		
42" CLASS 300			SPC 1-CUT ELL		1.36	1.35	27+81.35				211.72		
	93	1	VΔ = 8°-42' DN. w/ 6" AIR VALVE TYPE "B"	21	11.72	11.72	27+80.00 PI 6" AV. 27+76.33	PULL RT. 0°-21'			211.92	8°-29'	989059 (-149200
	92		SEE SH. 3				27+68.28				211.79	0°-13'	999932 +011241

VOID

SEE 50-4-102.67AB

VOID

NOTE READ UP!

NOTE: STD. DENOTES STANDARD PIPE; SPC. DENOTES SPECIAL PIPE; V.P. DENOTES VERTICAL PULL; H.P. DENOTES HORIZONTAL PULL

MARK	BY	DATE	REVISION

F.O. 6348
DR. BY HAW TR. BY
CHK. BY DATE 3-19-58

LAYOUT SHEET
RUSSIAN RIVER AQUEDUCT
PROJECT #1 DIVISION "A"

AMERICAN PIPE & CONSTRUCTION CO.
NORTHERN CALIFORNIA DIVISION—HAYWARD, CALIF.
DWG. NO. D2-0814 SHEET 4 OF SHEETS

50-4-102.66AB

CLASS	PIPE OR PIECE NO.	NO. OF PIECES	REMARKS	DETAIL ON SHEET NO.	SEE FIELD INFORMATION SHEET NO. 3	SLOPE	HORIZONTAL	STATION	PLAN LOOKING IN DIRECTION OF LAYING	TURN OR PULL	PROFILE NOTE: VIEW FROM RIGHT SIDE OF PIPE	ELEV.	ANGLE	COSIN. / TAN.
			Pull suceeding pipe											
	109	1	Req'd AMOUNT TO Return to grade.					31+73.59				211.99		
CL. 300	107	1	STD			32.03	31.81	31+41.78				208.24	6°-44'	993103 / +118066
						1.05	1.04	31+40.74				208.11	7°-02'	992475 / +123375
	105A, 106 & 105B		DETAIL DRAWING 50-4-102.87AB			32.67	31.38	31+09.36				199.03	16°-08'	960618 / +289266
		1	[illegible] CUT ELLS VΔ = 9°-06' DN. EA.			0.78	0.71	31+08.65				198.70		
	108	1	STD			32.03	28.97	30+79.68				185.05		
	103	1	STD			32.03	28.97	30+50.71				171.39		
CL. 350	102	1	SPC BEVEL @ 4°-15' DN. SEE DWG 50-4-102.81AB			31.76	28.73	30+21.98				157.85	25°-14'	904579 / -471319
			SPC 3-CUT ELL w/			5.06	4.40	30+17.58				155.36	29°-29'	870499 / +565389
	101	1	6" BLOW OFF VΔ = 46-35' UP			4.79	4.58	30+13.00				156.77		
	100	1	SPC SHORT SECT w/ FIELD CLOSURE			10.61 PL. 11.68	10.14	30+02.86				159.89		
CL. 350	104	1	SPC SHORT SECT			31.09	29.72	29+73.14				169.03		
	98-99	2	STDS			64.06	61.23	29+11.91				187.87	17°-06'	955793 / -307568
			SPC 1-CUT ELL VΔ =			33.25	31.88	28+80.03				197.32	16°-31'	955757 / -296550
CL. 350	97	1	13°-02' w/ 5° BEVEL	17		3.65	3.64	28+76.39				197.54	3°-29'	998153 / -066871
	96	1	STD										8°-29'	989059 / -149200

PULL RT. 0°-56'
PULL DN. 0-18'
PULL RT. 0°-56'
PULL RT 0-56'
PULL RT. 0°-56'
Field closure
PULL RT. 0°-56'
PULL EA. RT. 0°-56'
PULL PC. 98 DN. 0-35'
Bev UP 5°
PULL 1°-04' RT.

NOTE: READ UP

NOTE: STD. DENOTES STANDARD PIPE; SPC DENOTES SPECIAL PIPE; V.P. DENOTES VERTICAL; H.P. DENOTES HORIZONTAL PULL

MARK	BY	DATE	REVISION

F.O. 6348
DR. BY: HAW | TR. BY:
CHK. BY | DATE 7/10/53

LAYOUT SHEET
ADJUSTMENT OF LINE FROM STA. 28+76 & STA 31+73.
RUSSIAN RIVER DIV. "A"

AMERICAN PIPE & CONSTRUCTION CO.
NORTHERN CALIFORNIA DIVISION—HAYWARD, CALIF.
DWG. NO. D2-0843 | SHEET 4.1 OF SHEETS

50-4-102.67AB

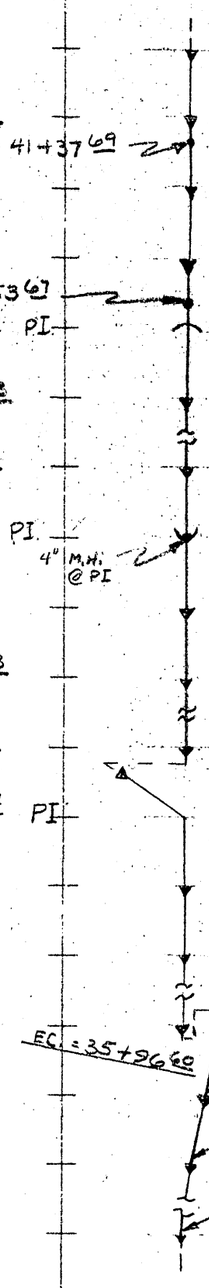

CLASS	PIPE OR PIECE NO.	NO OF PIECES	REMARKS	DETAIL ON SHEET NO.	SLOPE	HORIZONTAL	STATION	PLAN LOOKING IN DIRECTION OF LAYING	TURN OR PULL	PROFILE NOTE: VIEW FROM RIGHT SIDE OF PIPE	ELEV.	ANGLE	COSIN. / TAN.
			CONT'D ON SH. 6										
42" CLASS 350	142	1	STD		32.00	32.00	41+79.31				197.08		
	141	1	SPC w/ 3" METER CONN.	32	32.00	32.00	41+47.31	3" M.C. = 41+37.69			197.55		
	140	1	STD		32.00	32.00	41+15.31				198.03		
	↑	↑	SPC 1-CUT ELL DN		33.31	33.31	40+83.31	6" AV. - 40+53.67			198.50	0°-51'	999890 / -014866
	139	1	VΔ = 9°-10' w/ 6" AIR VALVE DN TYPE "B"	29	1.18	1.17	40+50.00 PI				199.00		
	135-138	4	STDS		128.00	126.65	40+48.83				198.83		
	↑	↑	SPC 2-CUT ELL		2.20	2.18	39+22.18				180.32	8°-19'	989484 / +146153
	134	1	VΔ = 18°-15' UP w/ 4" MAN HOLE TYPE "C"	23	1.93	1.90	39+20.00 PI	4" M.H. @ PI			180.00		
	133	1	SPC SHORT SECT.	16	20.68	20.37	39+18.10				180.33		
	130-132	3	STDS		96.00	94.56	38+97.73				183.87		
42" CLASS 300	↑	↑	SPC 3-CUT ELL		4.19	4.13	38+03.17				200.32	9°-56'	985009 / -173970
	129	1	HΔ = 45°-28 LFT VΔ = 7°-13' DN. CΔ = 45°-43'	25	3.92	3.92	37+99.04 PI				201.04		
	128	1	SPC SHORT SECTION	16	17.79	17.77	37+95.12				201.24		
	123-127	5	STDS		160.00	159.82	37+77.35				202.08		
	122	1	SPC BEVEL DN. VΔ = 2°-19'	16	31.85	31.81	36+17.53	EC. = 35+96.60	PULL RT. 0°-02' BEV. DN. 2°-19'		209.67	2°-43'	998876 / -047507
	121 *	1	STD		32.01	32.01	35+85.72		PULL RT. 0°-24'		211.18		
	110-120 *	11	STDS.		352.33	352.32	35+53.71		PULL EA. RT. 0°-56'		211.40		
	109		SEE SH. 4				32+01.39				213.87	0-24'	999976 / -007000

NOTE READ UP!

NOTE: STD DENOTES STANDARD PIPE; SPC DENOTES SPECIAL PIPE; V.P. DENOTES VERTICAL; H.P. DENOTES HORIZONTAL PULL

MARK	BY	DATE	REVISION

F.O. 6348
DR BY HAW | TR BY
CHK BY [signature] | DATE 3-19-58

LAYOUT SHEET
RUSSIAN RIVER AQUEDUCT
PROJECT #1 DIVISION "A"

AMERICAN PIPE & CONSTRUCTION CO.
NORTHERN CALIFORNIA DIVISION—HAYWARD, CALIF.
DWG. NO. D2-0814 | SHEET 5 OF SHEETS

50-A-107 68 AB

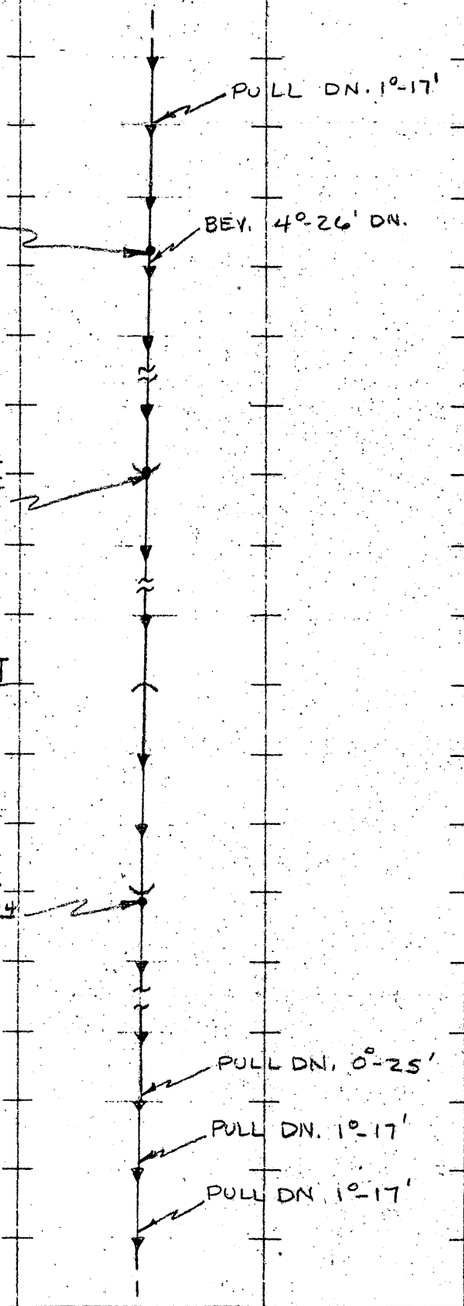

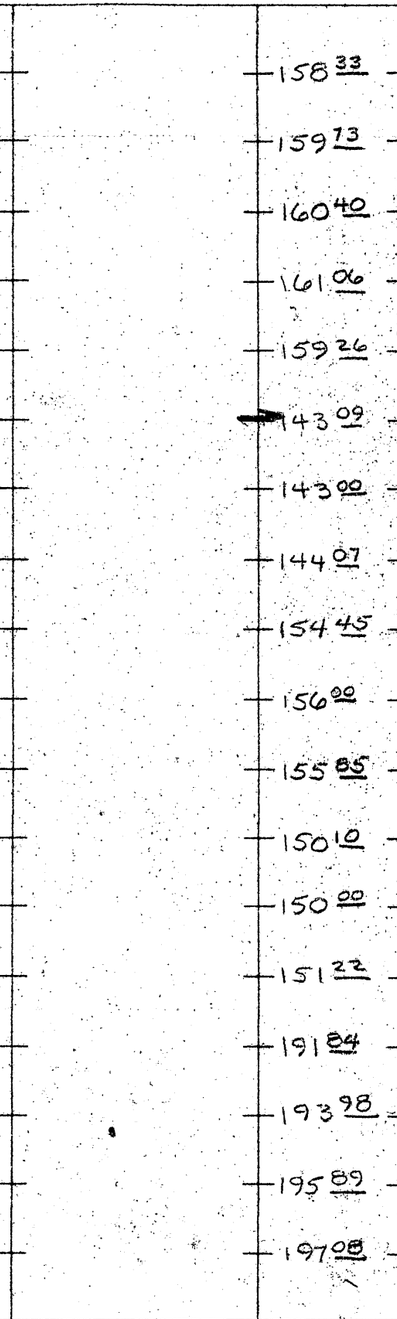

CLASS	PIPE OR PIECE NO.	NO OF PIECES	REMARKS	DETAIL ON SHEET NO.	SEE FIELD INFORMATION SHEET NO. 3	DISTANCE SLOPE	DISTANCE HORIZONTAL	STATION	PLAN LOOKING IN DIRECTION OF LAYING	TURN OR PULL	PROFILE NOTE: VIEW FROM RIGHT SIDE OF PIPE	ELEV.	SLOPE ANGLE	SLOPE COSIN. TAN.
			CONTD ON SH. 7					56+96.76				158.33		
42" CLASS 300	190	1	STD			32.00	31.97	56+64.79	PULL DN. 1°-17'			159.73	2°-30'	999048 / -043661
	189	1	STD			32.00	31.99	56+32.80				160.40		
	188	1	SPC BEVEL - 4°-26' DN. w/ 8" AIRVALVE TYPE "B"	31		31.72	31.71	8" AV. 56+03.81	BEV. 4°-26' DN.			161.06	1°-13'	999781 / -020827
	187	1	STD			32.00	31.95	56+01.09				159.26		
	178-186	9	STDS			288.00	287.55	55+69.14				143.09		
42" CLASS 350			SPC 1-CUT ELL			1.59	1.59	52+81.59				143.00	3°-13'	998424 / +056250
	177	1	VΔ = 5°-53' UP w/ 4" M.H. TYPE "C"	20		22.96	22.94	52+80.00 PI; 4" MH 52+79.15				144.07		
	170-176	7	STDS			224.00	223.76	52+57.06				154.45		
			SPC 1-CUT ELL			33.34	33.30	50+33.30				156.00	2°-40'	998917 / -046428
	169	1	VΔ = 6°-06' DN.	17		2.56	2.56	50+00.00 PI				155.85		
	166-168	3	STDS			96.00	95.83	49+97.44				150.10		
			SPC 1-CUT ELL			1.61	1.61	49+01.61				150.00	3°-26'	998205 / +060000
	165	1	VΔ = 7°-16' UP w/ 4" MAN-HOLE TYPE "C"	20		18.24	18.20	49+00.00 PI; 4" MH. 48+99.14				151.22		
	146-164	19	STDS			608.00	606.64	48+81.80				191.84		
	145	1	STD			32.00	31.93	42+75.16	PULL DN. 0°-25'			193.98	3°-50'	997763 / -066964
	144	1	STD			32.00	31.94	42+43.23	PULL DN. 1°-17'			195.89	3°-25'	998223 / -059703
	143	1	STD			32.00	31.98	42+11.29	PULL DN. 1°-17'			197.08	2°-08'	999307 / -037251
	142		SEE SH. 5					41+79.31					0°-51'	999890 / -014866

NOTE: READ UP

NOTE: STD. DENOTES STANDARD PIPE; SPC. DENOTES SPECIAL PIPE; V.P. DENOTES VERTICAL PULL; H.P. DENOTES HORIZONTAL PULL

MARK	BY	DATE	REVISION

F.O. 6348
DR. BY HAW | TR. BY
CHK BY [signature] | DATE 3-20-58

LAYOUT SHEET
RUSSIAN RIVER AQUEDUCT
PROJECT NO. 1 DIVISION "A"

AMERICAN PIPE & CONSTRUCTION CO.
NORTHERN CALIFORNIA DIVISION—HAYWARD, CALIF.
DWG. NO. D2-0814 | SHEET 6 OF SHEETS

50-4-102 19 AR

CONT'D SH. 8

CLASS	PIPE OR PIECE NO.	NO. OF PIECES	REMARKS	DETAIL ON SHEET NO.	SLOPE	HORIZONTAL	STATION	PLAN LOOKING IN DIRECTION OF LAYING	TURN OR PULL	PROFILE NOTE VIEW FROM RIGHT SIDE OF PIPE	ELEV.	ANGLE	COSIN. / TAN.
42" CLASS 400			SPC 3-CUT ELL	25	4.07	4.06	72+75.16				133.30		
	240	1	HΔ = 44°-24 LFT. w/ FIELD CLOSURE		6.99 PL.=8.99	6.98	72+71.10 P.I.	Field Closure			133.57		
	239	1	STD		32.00	31.93	72+64.12				134.02		
	238	1	STD		32.00	31.93	72+32.19				136.12	3°-45'	997859 / -065567
	237	1	STD		32.00	31.95	72+00.26	PULL DN. 0°-27'			138.21	3°-18'	998342 / -057660
	236	1	STD		32.00	31.98	71+68.31	PULL DN. 1°-17'			140.05	2°-01	999381 / -035212
	230-235	6	STDS		192.00	191.98	71+36.33	PULL DN. 1°-17'			141.18		
42" CLASS 350	223-229	7	STDS		224.00	223.98	69+44.35				143.65		
	222	1	SPC w/ 6" AIR VALVE TYPE "A"	32	32.00	32.00	67+20.37	6" A.V. 66+89.87	PULL DN. 0°-59'		146.54	0°-44'	999918 / -012889
	212-221	10	STDS		320.00	320.00	66+88.37				146.95		
	211	1	STD		32.00	32.00	63+68.37				145.56	0-15'	999990 / +004345
	210	1	STD		32.00	32.00	63+36.37	PULL DN. 0°-15'			145.42	0°-30'	999962 / +008727
	206-209	4	STDS		128.00	127.94	63+04.37	PULL DN. 1°-17'			145.14		
	205	1	SPC BEVEL-VΔ = 3°-23' UP w/ 4" M.H. TYPE "C"	32	32.00	31.98	61+76.43	4" M.H. 61+45.95	BRV. 3°-23' UP		141.16	1°-47'	999516 / +031115
	201-204	4	STDS		128.00	127.95	61+44.45				140.16		
	200	1	STD		32.07	32.06	60+16.50				143.82	1°-36'	999610 / -028630
42" CLASS 300	192-199	8	STDS		256.00	255.72	59+84.44	PULL UP 1°-06'			144.74		
	191	1	STD.		32.00	31.96	57+28.72				156.82	2°-42'	998890 / -047256
	190		SEE SH. 6				56+96.76	PULL DN. 0-12'			158.33	2°-30'	

NOTE READ UP

NOTE STD. DENOTES STANDARD PIPE; SPC DENOTES SPECIAL PIPE; V.P. DENOTES VERTICAL PULL; H.P. DENOTES HORIZONTAL PULL

MARK	BY	DATE	REVISION

F.O. 6348
DR. BY HAW TR. BY
CHK. BY DATE 3-21-58

LAYOUT SHEET
RUSSIAN RIVER AQUEDUCT
PROJECT #1 DIVISION "A"

AMERICAN PIPE & CONSTRUCTION CO.
NORTHERN CALIFORNIA DIVISION—HAYWARD, CALIF.
DWG. NO. PZ-0814 SHEET 7 OF SHEETS

50-4-102.72 AS

CLASS	PIPE OR PIECE NO.	NO. OF PIECES	REMARKS	DETAIL ON SHEET NO.	SPECIAL	DISTANCE SLOPE	DISTANCE HORIZONTAL	STATION	PLAN (LOOKING IN DIRECTION OF LAYING) TURN OR PULL	PROFILE (NOTE: VIEW FROM RIGHT SIDE OF PIPE) ELEV.	ANGLE	SLOPE COSIN.	SLOPE TAN
42" CLASS 450			CONT'D SH. 9					90+34 51		70 91			
	295	1	SPC BEVEL - VΔ = 3°-34' DN.	16		31 77	31 68	90+02 83	PULL RT. 0°-55' BEV. DN. 3°-34'	73 28	4°-17'	997207	-074920
	284-294	11	STDS			352 33	352 30	86+50 53	PULL EA. RT. 0°-55'	77 67			
	283	1	STD			32 03	32 03	86+18 50	PULL RT. 0-55' PULL UP 0-01	78 07	0-43'	999922	-012472
	282	1	STD			32 08	32 08	85+86 42	PULL RT 0-55' PULL UP 1°-17'	78 48	0°-44'	999918	-012800
	272-281	10	STDS			320 30	320 09	82+66 33	PULL EA. RT. 0°-55'	90 08	2°-05'	999339	-036240
	271	1	STD			32 03	31 98	82+34 30	PULL RT. 0°-55' PULL DN. 0°-15'	91 86	3°-11'	998457	-055617
	270	1	STD			32 21	31 97	BC = 82+26 30	PULL RT. 0°-16' PULL DN 1°-17'	93 50	2°-56'	998690	-051241
	264-269	6	STD			192 00	191 92	82+02 38		99 03			
	263	1	STD			32 05	32 04	80+10 46	PULL UP 09-52'	99 95	1°-39'	999585	-028811
	258-262	5	STD			160 00	159 85	79+78 42		107 00			
	257	1	STD			32 00	31 97	78+18 58	PULL DN 0°-42'	108 41	2°-31'	999035	-044097
	256	1	STD			32 00	31 98	77+86 61	PULL DN 1°-17'	109 42	1°-49'	999497	-031717
	254-255	2	STDS			64 00	64 00	77+54 63		110 02			
	253	1	STD			32 04	32 04	76+90 63	PULL UP 0°-32'	110 32	0-32'	999957	-009334
	252	1	STD			32 08	32 07	76+58 59	PULL UP 1°-17'	110 98	1°-11'	999787	-020656
	251	1	STD			32 08	32 05	76+26 52	PULL UP 1°-17'	112 36	2°-28'	999073	-043076
	241-250	10	STDS			320 00	319 31	75+94 47		133 30			
	240		SEE SH. 7					72+75 16			3°-45'	997859	-065567

PULL PCS 272-281 UP TO MEET THIS ELEV.

R = 2000'
Δ = 24°-45'-30"
L = 864 23
T = 438 97

NOTE READ UP!

NOTE STD. DENOTES STANDARD PIPE SPC. DENOTES SPECIAL PIPE V.P. DENOTES VERTICAL H.P. DENOTES HORIZONTAL PULL

MARK	BY	DATE	REVISION
1	HAW	6-10-58	REVISIONS BY DISTRICT

F.O. 6348
DR. BY HAW TR. BY
CHK BY DATE 3-25-58

LAYOUT SHEET
RUSSIAN RIVER AQUEDUCT
PROJECT NO. 1 DIVISION A

AMERICAN PIPE & CONSTRUCTION CO.
NORTHERN CALIFORNIA DIVISION—HAYWARD, CALIF.
DWG. NO. D2-0814 SHEET 5 OF SHEETS

50-4-102.7 AB

CLASS	PIPE OR PIECE NO.	NO. OF PIECES	REMARKS	DETAIL ON SHEET NO	SLOPE	HORIZONTAL	STATION	PLAN (LOOKING IN DIRECTION OF LAYING)	TURN OR PULL	PROFILE (NOTE: VIEW FROM RIGHT SIDE OF PIPE)	ELEV.	ANGLE	COSIN. / TAN.
			CONT'D SH. 10										
42" CLASS 450	342-345	4	STDS		128.16	127.94	104+59.36				56.38		
	341	1	SPC BEVEL - VΔ = 3°-43' w/ 6" BLOW OFF TYPE A LT. UP	32	32.04	31.99	103+31.42				48.93	3°-20'	998308 / +058275
	340	1	STD		32.04	32.04	102+99.43				47.06		
	339	1	STD		32.02	32.02	102+67.39				47.28		
	329-338	10	STDS		320.40	320.39	102+35.37				47.49		
	328	1	SPC BEVEL - VΔ = 3°-22' UP	16	32.04	32.04	99+14.98				49.60	0-23'	999978 / -006593
	326-327	2	STDS		64.08	64.07	98+82.94				49.81		
	325	1	SPC. BEVEL - VΔ = 3°-35' DN.	16	31.81	31.81	98+18.87				53.99	3°-45'	999859 / -065418
	323-324	2	STD		64.08	64.08	97+87.06				56.08		
	322	1	STD		32.03	32.03	97+22.98				56.27		
	310-321	12	STDS		384.00	384.00	96+90.95				56.31		
	309	1	STD		32.08	32.08	93+06.95				57.54	0°-10	999996 / -003046
	301-308	8	STDS		256.00	255.93	92+74.87				57.64		
	299-300	2	STDS		64.00	63.98	91+94.39				63.81		
	298	1	SPC BEVEL VΔ = 2°-54' UP	16	32.02	32.01	91+30.41				65.35	1°-23'	999709 / -024081
	297	1	STD		32.04	31.95	90+98.40				66.12		
	296	1	STD		32.03	31.94	90+66.45				68.52		
	295		SEE SH. 8				90+34.51				70.91	4°-17'	997207 / -074920

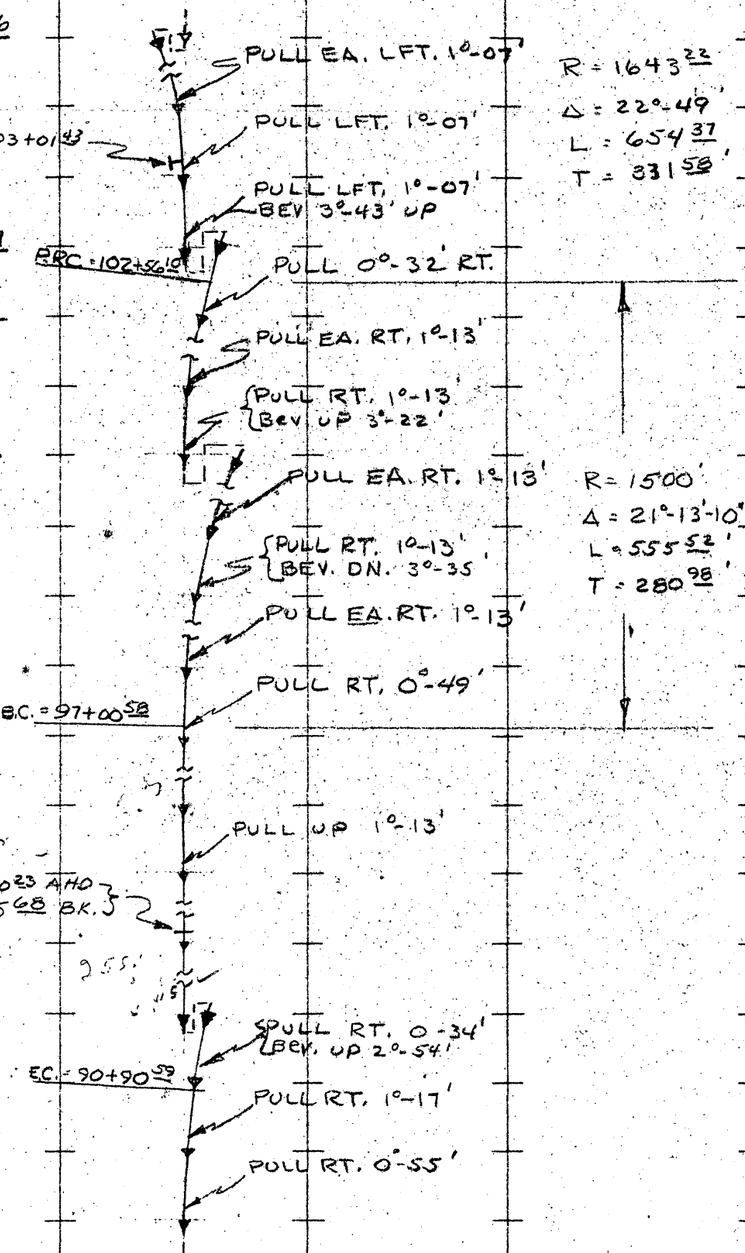

NOTE: READ UP

NOTE: STD DENOTES STANDARD PIPE; SPC DENOTES SPECIAL PIPE; V.P. DENOTES VERTICAL PULL; H.P. DENOTES HORIZONTAL PULL

MARK	BY	DATE	REVISION

F.O. 6348
DR. BY HAW | TR. BY:
CHK BY [signature] | DATE 3-26-58

LAYOUT SHEET
RUSSIAN RIVER AQUEDUCT
PROJECT #1 DIVISION "A"

AMERICAN PIPE & CONSTRUCTION CO.
NORTHERN CALIFORNIA DIVISION—HAYWARD, CALIF.
DWG. NO. D2-0814 | SHEET 9 OF SHEETS

50-4-102.72 AB

42" CLASS 450

CLASS	PIPE OR PIECE NO.	NO. OF PIECES	REMARKS	DETAIL ON SHEET NO	SLOPE	HORIZONTAL	STATION
			CONT'D SH. 11				
	↑	↑	SPC 2-CUT ELL		2.71	2.71	112+62.71
	373	1	VΔ = 23°-48' UP	22	2.44	2.33	
	372	1	SPC SHORT SECT.	16	17.58	16.03	112+57.18
	↑	↑	SPC 2-CUT ELL - DN.		1.92	1.75	112+41.75
	371	1	VΔ = 23°-16' w/ 18" M.H. TYPE "8"	24	3.55	3.55	112+40.00
							18"M.H.=112+38.18
	370	1	SPC SHORT SECT. w/ Field Closure	16	28.49 R=32.00	28.49	112+36.45
	367-369	3	STDS		96.09	96.09	112+07.96
	366	1	STD		32.03	32.03	111+11.87
	362-365	4	STD		128.00	128.00	110+79.84
	361	1	STD		32.01	32.01	109+51.84
	360	1	STD		32.02	32.02	109+19.83
	355-359	5	STD		160.20	160.20	108+87.81
	354	1	STD		32.08	32.08	107+27.61
	353	1	STD		32.07	32.06	106+95.53
	347-352	6	STDS		192.24	192.06	106+63.47
	↑	↑	SPC 1-CUT ELL		1.41	1.41	104+71.41
	346	1	VΔ = 6°-0 DN	19	10.60	10.57	104+70.00
	345		SEE SH. 9				104+59.36

DISTANCE

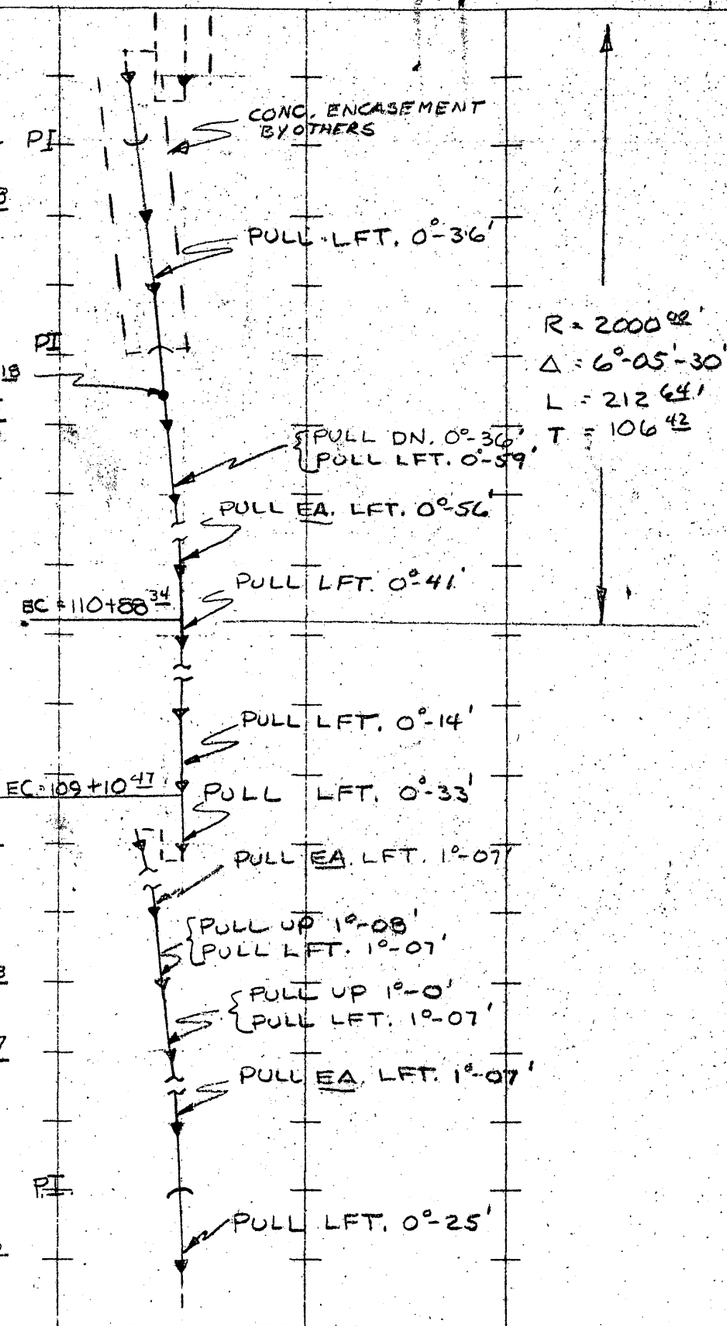

PLAN
LOOKING IN DIRECTION OF LAYING

TURN OR PULL

PROFILE
NOTE: VIEW FROM RIGHT SIDE OF PIPE

ELEV.	ANGLE	COSIN.	TAN.
35.03			
35.00	0-34'	999951	+010000
36.00			
43.21			
44.00	24°-14'	911881	-450000
44.05			
44.54	0°-58'	999858	-016853
45.14			
45.34			
46.14			
46.34			
46.54			
47.55	0-22'	999980	-006283
47.75	1°-30'	999657	-026186
48.59			
56.94	2°-30'	999048	-043478
57.00			
56.38	3°-20'	998308	+058275

ELEV. — SLOPE

NOTE: READ UP!

NOTE: STD. DENOTES STANDARD PIPE SPC DENOTES SPECIAL PIPE V.P. DENOTES VERTICAL PULL H.P. DENOTES HORIZONTAL PULL

MARK	BY	DATE	REVISION

F.O. 6348
DR BY HAW | TR. BY
CHK BY [illegible] | DATE 3-27-58

LAYOUT SHEET
RUSSIAN RIVER AQUEDUCT
PROJECT NO. 1 DIVISION "A"

AMERICAN PIPE & CONSTRUCTION CO.
NORTHERN CALIFORNIA DIVISION—HAYWARD, CALIF.
DWG. NO. D4-0814 | SHEET 10 OF SHEETS

50-A-102.7348

CONTD SH. 12

CLASS	PIPE OR PIECE NO.	NO. OF PIECES	REMARKS	DETAIL ON SHEET NO.	SLOPE	HORIZONTAL
	↑	↑	SPC 1-CUT ELL DN.		1 31	1 31
	401	1	VΔ = 11°-56'	19	3 56	3 47
	397-400	4	STDS		128 00	124 86
	↑	↑	SPC 1-CUT ELL UP		1 69	1 65
	396	1	VΔ = 12°-03'	18	29 04	29 04
	385-395	11	STDS		352 00	351 98
	384	1	STD		32 01	32 01
	383	1	STD		32 03	32 03
	382	1	STD		32 04	32 04
	380-381	2	STDS		64 08	64 04
	↑	↑	SPC 2-CUT ELL		1 86	1 86
	379	1	VΔ = 22°-14' DN.	22	1 59	1 45
	378	1	SPC SHORT SECT.	16	17 63	16 08
	↑	↑	SPC 2-CUT ELL		2 71	2 47
	377	1	VΔ = 23°-40' UP	22	2 44	2 44
	376	1	SPC SHORT SECT	16	30 79	30 79
	375	1	STD		32 03	32 03
	374	1	STD		32 03	32 03
	373		SEE SH. 10			

DISTANCE

STATION	PLAN (LOOKING IN DIRECTION OF LAYING)	TURN OR PULL	PROFILE (NOTE: VIEW FROM RIGHT SIDE OF PIPE)	ELEV.	ANGLE	COSIN. / TAN. SLOPE
120+54 31				81 88		
				81 86	0-45'	999914 / +013000
120+53 00 PI						
120+49 53				81 08		
				52 98		
119+24 65					12°-41'	975598 / +225000
119+23 00 PI				52 61		
				52 29		
118+93 96						
				48 41		
115+41 98						
	PULL RT. 0-16'			48 05		
EC 115+01 61	PULL DN. 0-05', PULL RT. 0-44'				0°-38'	999939 / +011032
115+09 97				47 70		
	PULL DN. 1°-17', PULL RT 1°-12'				0°-43'	999922 / +012509
114+77 94						
	PULL EA. RT. 1°-12'			47 30		
114+45 90						
		R = 1483 28		45 06		
113+81 86		Δ = 7°-45'			2°-0'	999391 / +034857
113+80 00 PI	PULL RT. 0°-08'	L = 200 63'		45 00		
113+78 55		T = 100 47'				
	PULL RT. 0°-38'			44 35		
113+62 47				37 11		
					24°-14'	911881 / +450000
113+60 00 PI				36 00		
	PULL RT. 0°-11'					
113+57 56	PULL RT. 1°-12'			35 98		
113+26 77				35 67		
PRC 113+00 88	PULL RT. 0°-54'					
112+94 14				35 35		
	PULL LFT. 0°-56'					
112+62 71				35 03	0°-34'	999951 / +010000

NOTE READ UP

NOTE STD. DENOTES STANDARD PIPE SPC. DENOTES SPECIAL PIPE V.P. DENOTES VERTICAL PULL H.P. DENOTES HORIZONTAL PULL

MARK	BY	DATE	REVISION

F.O. 6348
DR BY: HAW | TR BY
CHK BY | DATE 3-28-58

LAYOUT SHEET
RUSSIAN RIVER AQUEDUCT
PROJECT NO. 1 DIVISION A"

AMERICAN PIPE & CONSTRUCTION CO.
NORTHERN CALIFORNIA DIVISION—HAYWARD, CALIF.
DWG. NO. D2-0814 | SHEET 11 OF SHEETS

50-4-102.74 AB

CONT'D SHT. 13

CLASS	PIPE OR PIECE NO.	NO. OF PIECES	REMARKS	DETAIL ON SHEET NO.	SLOPE	HORIZONTAL DISTANCE	STATION	TURN OR PULL	ELEV.	ANGLE	SLOPE COS'N	SLOPE TAN
42" CLASS 450			SPC 1-CUT ELL		166	165	137+04 65		62 23			
	450	1	VΔ = 9°-46' UP w/ 4" MAN-HOLE TYPE "C"	20	27 42	27 32	137+03 00 PI 4" M.H. = 137+02		62 09	4°-48'	996493	+084000
	444-448	6	STDS		192 00	191 28	136+75 68		64 47			
			SPC 1-CUT ELL		141	140	134+84 40		81 11			
	443	1	VΔ = 5°-58' DN. w/ 4" AIR VALVE TYPE "B"	21	18 72	18 72	134+83 00 PI 4" A.V. = 134+77 68		81 23	4°-58'	996245	-087000
	429-442	14	STD		448 00	447 93	134+64 28	PULL DN. 0-52' (PC 429 ONLY)	80 90			
	428	1	STD		32 00	31 98	130+16 35		73 09	1°-0	999848	+017443
	427	5	STD		160 00	159 76	129+84 37	PULL DN. 1°-17'	72 05	1°-52'	999469	+032591
			SPC 1-CUT ELL		161	161	128+24 61		63 26			
	426	1	VΔ = 7°-20' UP w/ 4" M.H. TYPE "C"	20	29 93	29 85	128+23 00 PI 4" M.H. = 128+22 27		63 17	3°-09'	998489	+055000
	412-425	14	STDS		448 00	446 81	127+93 15		65 35			
			SPC 1-CUT ELL		335	334	123+46 34 6" A.V. = 123+44 50		97 97	4°-11'	997336	-073000
	411	1	VΔ = 9°-24' DN. w/ 6" AIR VALVE TYPE "B"	26	137	136	123+43 00 PI		98 21			
	410	1	STD		32 00	31 87	123+41 64		98 09			
	407-409	3	STDS		96 00	95 60	123+09 77		95 18			
	406	1	SPC BEVEL - VΔ = 4°-28' UP	16	32 00	31 87	122+14 17	Bev. UP 4°-28'	86 45	5°-13'	995858	+091288
	402-405	4	STDS		128 00	127 99	121+82 30		83 54			
	401		SEE SH 11				120+54 31		81 88	0-45'	999914	+013000

PLAN — LOOKING IN DIRECTION OF LAYING

PROFILE — NOTE: VIEW FROM RIGHT SIDE OF PIPE

NOTE READ UP!

NOTE STD DENOTES STANDARD PIPE SPC DENOTES SPECIAL PIPE V.P. DENOTES VERTICAL H.P. DENOTES HORIZONTAL PULL

F.O. 6348

DR. BY HAW TR. BY

CK. BY DATE 3-31-58

LAYOUT SHEET
RUSSIAN RIVER AQUEDUCT
PROJECT NO. 1 DIVISION "A"

AMERICAN PIPE & CONSTRUCTION CO.
NORTHERN CALIFORNIA DIVISION — HAYWARD, CALIF.

DWG. NO. D2-0814 SHEET 12 OF SHEETS

60-4-102.75AB

CONT'D SH. 14

42" CLASS 4/50

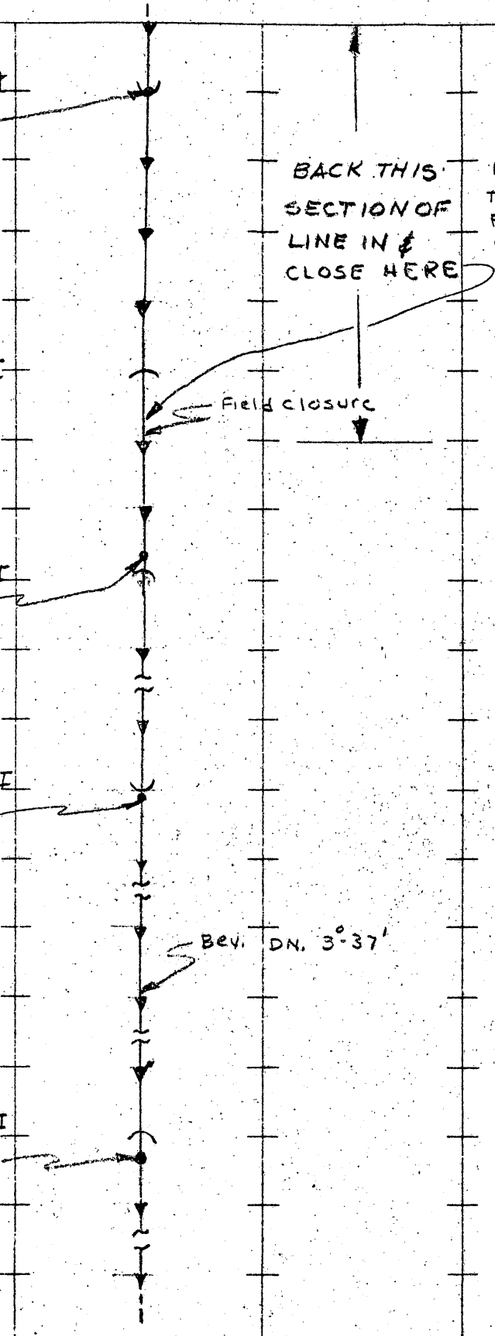

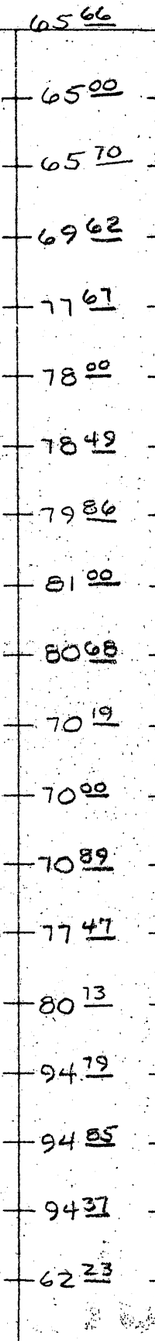

CLASS	PIPE OR PIECE NO.	NO. OF PIECES	REMARKS	DETAIL ON SHEET NO.	[redacted]	SLOPE	HORIZONTAL	STATION	PLAN LOOKING IN DIRECTION OF LAYING	TURN OR PULL	PROFILE NOTE: VIEW FROM RIGHT SIDE OF PIPE	ELEV.	ANGLE	COSIN. / TAN.
								147+72.98				65.66		
			SPC 2-CUT ELL -			3.05	2.98						12°-33'	976107 / +222625
	487	1	VΔ = 27°-07' UP w/ 4" MAN HOLE TYPE "C"	23		2.78	2.69	147+70.00 PI; 4" M.H. @ PI				65.00		
	486	1	SPC SHORT SECT.	16		15.57	15.07	147+67.31				65.70		
	485	1	STD			32.00	30.97	147+52.24				69.62		
			SPC 1-CUT ELL			1.31	1.27	147+21.27				77.67		
	484	1	VΔ = 12°-07' DN. w/ Field CLOSURE	18		11.52; PL = 13.52	11.51	147+20.00 PI				78.00	14°-34'	967856 / -260000
	483	1	STD			32.00	31.97	147+08.49				78.49		
			SPC 1-CUT ELL -			26.54	26.52	146+76.52				79.86		
	482	1	VΔ = 8°-44' DN w/ 4" AIR VALVE TYPE "B"	28		2.91	2.89	146+50.00 PI; 4" A.V. = 146+53.30				81.00	2°-27'	999086 / -042857
	479-481	3	STDS			96.00	95.42	146+47.11				80.68		
			SPC 1-CUT ELL			1.70	1.69	145+51.69				70.19		
	478	1	VΔ = 12°-11' UP w/ 4" MAN HOLE TYPE "C"	20		8.68	8.63	145+50.00 PI; 4" M.H. = 145+49.12				70.00	6°-17'	993993 / +110000
	476-477	2	STDS			64.00	63.66	145+41.37				70.89		
	475	1	SPC BEVEL - 3°-37' DN.	16		31.77	31.60	144+77.71				77.47		
	464-474	11	STDS			352.00	351.72	144+46.11				80.13	5°-54'	994703 / -103282
			SPC 1-CUT ELL			1.39	1.39	140+94.39				94.79		
	463	1	VΔ = 7°-05 DN. w/ 4" AIR VALVE TYPE "B"	30		5.72	5.70	140+93.00 PI; 4" A.V. = 140+90.75				94.85	2°-17'	999206 / -040000
	451-462	12	STDS			384.00	382.65	140+87.30				94.37		
	450		SEE SH. 12					137+04.65				62.23	4°-48'	996493 / +084000

BACK THIS SECTION OF LINE IN & CLOSE HERE

Lay PC. 487 1st Then Lay back to PC. 484. - Close w/ Buttstrap.

Field closure

Bev. DN. 3°-37'

NOTE: READ UP

NOTE: STD. DENOTES STANDARD PIPE; SPC DENOTES SPECIAL PIPE; V.P. DENOTES VERTICAL; H.P. DENOTES HORIZONTAL PULL

MARK	BY	DATE	REVISION

F.O. 6348
DR BY HAW | TR BY
CHK BY [signature] | DATE 4-1-58

LAYOUT SHEET
RUSSIAN RIVER AQUEDUCT
PROJECT NO. 1, DIVISION "A"

AMERICAN PIPE & CONSTRUCTION CO.
NORTHERN CALIFORNIA DIVISION—HAYWARD, CALIF.
DWG. NO. D2-0814 | SHEET 13 OF SHEETS

5A-4-102.76AB

CONT'D SH. 15

CLASS	PIPE OR PIECE NO	NO OF PIECES	REMARKS	DETAIL ON SHEET NO	SLOPE DISTANCE	HORIZONTAL DISTANCE	STATION	PLAN (LOOKING IN DIRECTION OF LAYING)	TURN OR PULL	PROFILE (NOTE: VIEW FROM RIGHT SIDE OF PIPE)	ELEV.	ANGLE	COSIN. TAN. SLOPE
42" CLASS 400	524-525	2	STDS		64.00	61.88	159+56.38				117.78		
	523 *	1	STD		32.01	30.95	158+94.50	EC = 158+90.37	PULL RT. 0°-27'		101.45		
	522 *	1	STD		32.03	30.97	158+63.55		PULL RT. 0°-56'		93.28		
	521	1	STD		32.03	30.97	158+32.58		PULL RT. 0-56'	R = 2000' Δ = 13°-56'-20" L = 486.56' T = 244.49'	85.10		
	↑	↑	SPC 1-CUT ELL -		1.67	1.61	158+01.61				76.92	14°-47'	966898 +263975
	520	1	VΔ = 10°-24' UP	18	31.00	30.91	158+00.00 PI		PULL RT. 0-57'		76.50		
	511-519	9	STDS		288.27	287.43	157+69.09				74.13		
	↑	↑	SPC 1-CUT ELL		1.66	1.66	154+81.66		PULL EA. RT. 0°-56'		52.08		
	510	1	VΔ = 10°-08' UP w/ 6" BLOW OFF TYPE A	28	30.06	29.91	154+80.00 PI				51.95	4°-23'	997075 +076718
							6" B.O. = 154+79.21		PULL RT. 0°-55'		54.96		
	509 *	1	STD		32.03	31.87	154+50.09		PULL RT. 0°-56'		58.17		
	508	1	STD		32.02	31.86	154+18.22				61.37		
	496-507 *	12	STDS		384.00	382.07	B.C. = 154+03.81		PULL RT. 0°-25'		99.82		
	↑	↑	SPC 1-CUT ELL		1.30	1.29	153+86.36				99.95	5°-45'	994969 -100628
	495	1	VΔ = 12°-41' w/ 6" DN. AIR VALVE TYPE "B"	27	9.11	9.04	150+04.29				98.85		
							150+03.00 PI				83.40		
							6" AV. = 150+01.54				79.57	6°-56'	992687 +121635
	491-494	4	STDS		128.00	127.06	149+93.96				65.66		
	490	1	SPC BEVEL - 5°-0' DN.	16	31.68	31.45	148+66.90		Bev. DN. 5°-0 Pull DN. - 0°-37'			12°-33'	976107 +222625
	489				64.00	62.47	148+35.45						
	487		SEE SH. 13				147+72.98						

INOTE READ UP!

NOTE STD DENOTES STANDARD PIPE VP DENOTES VERTICAL
SPC DENOTES SPECIAL PIPE HP DENOTES HORIZONTAL PULL

MARK	BY	DATE	REVISION

F.O. 6348
DR BY HAW TR BY
CHK BY DATE 4-1-58

LAYOUT SHEET
RUSSIAN RIVER AQUEDUCT
PROJECT NO. 1 DIVISION "B"

AMERICAN PIPE & CONSTRUCTION CO.
NORTHERN CALIFORNIA DIVISION—HAYWARD, CALIF.
DWG. NO. D2-0814 SHEET 14 OF SHEETS

50-4-102.7746

~~17,058.20~~ ~~3.04~~ ~~17,055.16~~ include 49 and 175.45' equation

CLASS	PIPE OR PIECE NO.	NO OF PIECES	REMARKS	DETAIL ON SHEET NO.	SLOPE	HORIZONTAL DISTANCE	STATION	PLAN LOOKING IN DIRECTION OF LAYING	TURN OR PULL	PROFILE NOTE VIEW FROM RIGHT SIDE OF PIPE	ELEV.	ANGLE	COSIN. TAN.
42" CLASS 400			JOIN 36" DIVISION "B"				167+87.77				110.40		
			36" GATE VALVE BY OTHERS		~~3.04~~	3.03	167+84.74				110.20		
	554	1	SPC w/ 42"X36" FLgd TAPER, 12" TURN OUT & Field closure TYPE A	31	20.31 PL=22.27	20.27	12" T.O. 167+79.50						
	547-553	7	STDS		224.00	223.55	167+64.47				108.67		
	546	1	STD		32.06	32.00	165+40.92				94.54		
	545	1	STD		32.00	31.96	165+08.92	PULL UP 0°-54'			92.52	3°-37'	998008 +063207
			SPC 1-CUT ELL		1.96	1.96	164+76.96				91.00		
	544	1	VΔ = 6°-50' UP w/ 4" MAN HOLE TYPE "C"	20	23.37	23.31	164+75.00 PI				90.91	2°-43'	998876 +047464
	537-543	7	STDS		224.00	223.42	164+51.69				92.59		
			SPC 1 CUT ELL		1.27	1.27	162+28.27				108.64		
	536	1	VΔ = 14°-16' DN. w/ 4" AIR VALVE TYPE "B"	21	30.31	29.84	162+27.00 PI				108.73	4°-07'	997420 -071854
	533-535	3	STDS		96.00	94.50	161+97.16				103.39		
			SPC 2-CUT ELL		2.70	2.66	161+02.66				86.48		
	532	1	VΔ = 23°-30' UP w/ 4" MAN HOLE TYPE "C"	23	2.43	2.36	161+00.00 PI				86.00	10°-09'	984350 +178976
	531	1	SPC SHORT SECT.	16	10.71	10.42	160+97.64				86.56		
	527-530	4	STD		128.00	124.54	160+87.22				89.03		
			SPC 2-CUT ELL		1.73	1.68	159+62.68				118.60		
	526	1	VΔ = 28°-08' DN. w/ 6" AIR VALVE TYPE "B"		4.78	4.62	159+61.00 PI				119.00	13°-21'	972978 -237410
	525		SEE SH. 14				159+56.38				117.78	14°-47'	966898 +263975

~~838.67~~ 3.04 ~~835.63~~

NOTE READ UP!

NOTE STD DENOTES STANDARD PIPE; SPC DENOTES SPECIAL PIPE; VP DENOTES VERTICAL; HP DENOTES HORIZONTAL PULL

MARK	BY	DATE	REVISION

F.O. 6348
DR BY HAW TR BY
CHK BY [signature] DATE 4-3-58

LAYOUT SHEET
RUSSIAN RIVER AQUEDUCT
PROJECT NO. 1 DIVISION "A"

AMERICAN PIPE & CONSTRUCTION CO.
NORTHERN CALIFORNIA DIVISION—HAYWARD, CALIF.
DWG. NO. D2-0814 SHEET 15 OF SHEETS

50-4-102.78 AB

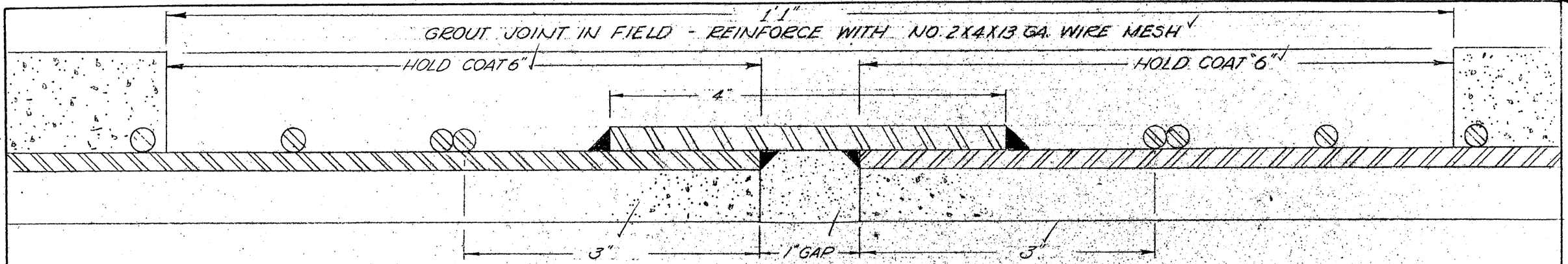

A.C.C.P BUTTSTRAP JOINT

PIPE SIZE	O.D CYL.	WT/FT. PIPE	TOTAL As	CYLINDER "T"	CYLINDER As/Ft.	CIRCUMFERENTIAL ROD WRAP SIZE	SPACING	As/Ft.	WT/Ft.	CLASS PIPE	HYDRO PRESS
30"	31 7/8"	290.0#	2.55	3/16"	2.25	7/32" Ø	1.50	0.30	0.92	100 P.S.I.	262#

BEGINNING OF CONTRACT

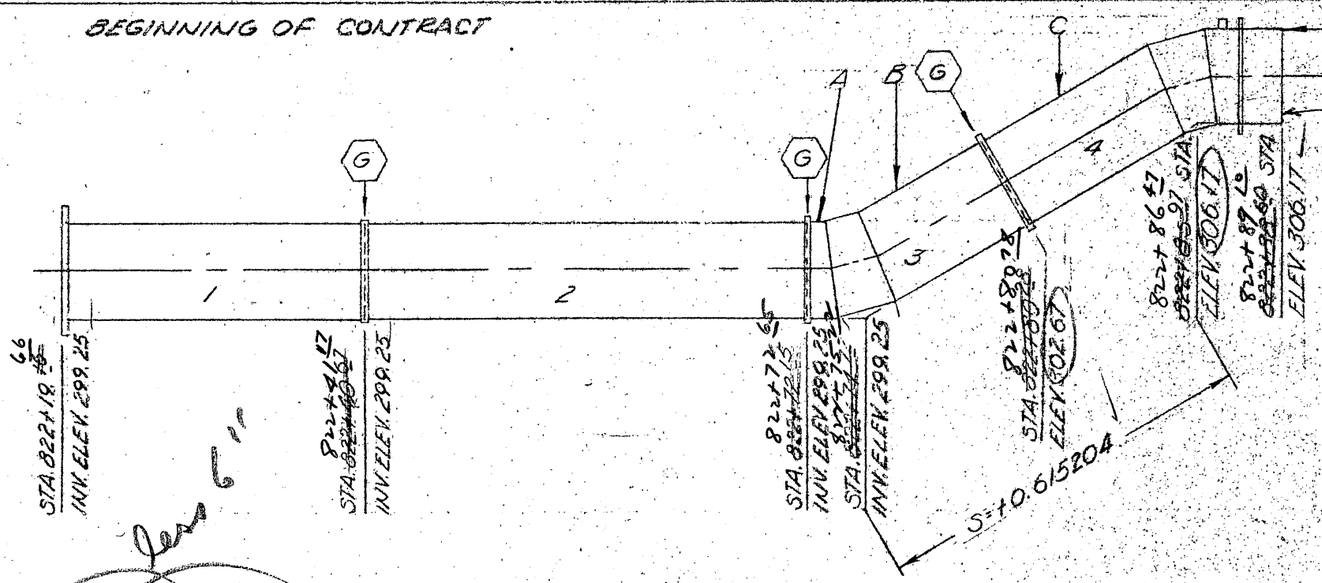

5'-1 1/4" to inside of tank

6'-3 1/4"

Shell thickness 1 5/16" Bottom

AT ALL POINTS MARKED (G) A 1" ALLOWANCE HAS BEEN GIVEN FOR BUTTSTRAP JOINT

Typical for diameter = 4'-0 1/4"

PC 1	PC 2	PC 3	PC 4
SPECIAL SHORT SECT. W/30" FLG. END - 1 BARE END LL = 21.01' HL R = 20.97	SPECIAL SECTION W/2 - BARE ENDS LL = 31.43' HL R = 31.40'	SPECIAL 31°36' 2 CUT ELBOW UP W/2 BARE ENDS LEG A - LL = 2.57' HL R = 2.53' LEG B - LL = 6.53' HL = 5.56' R = 0.49'	SPECIAL 31°36' 2 CUT ELBOW DOWN W/1 BARE END & DRESSER END & 1-2" COUPLING LEG C - LL = 6.68' HL = 5.69' R = 0.68' LEG D - LL = 2.63' HL

RW000705

MARK	BY	DATE	REVISION

F.O. 7029
DR. BY: JRA
CHECKED:
DATE: 7-10-53

LAYOUT
30" TERMINAL RESERVOIR LINE

AMERICAN PIPE & CONSTRUCTION CO.
NORTHERN CALIFORNIA DIVISION - HAYWARD, CALIF.
DWG. NO. D2-0845
SHEET 1 OF 2 SHEETS

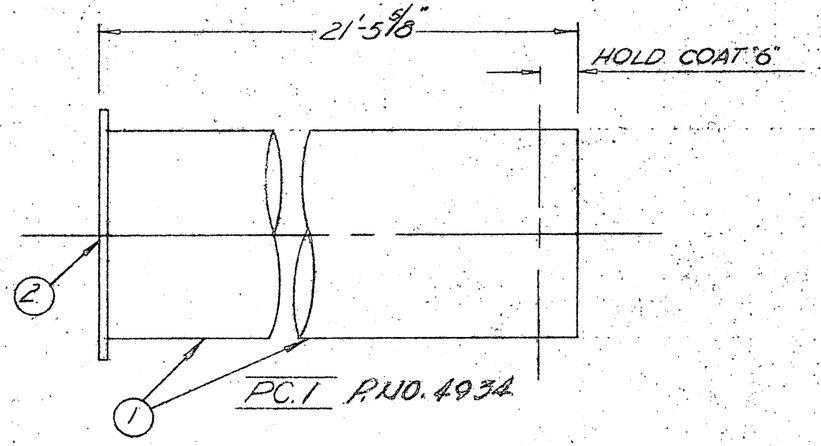

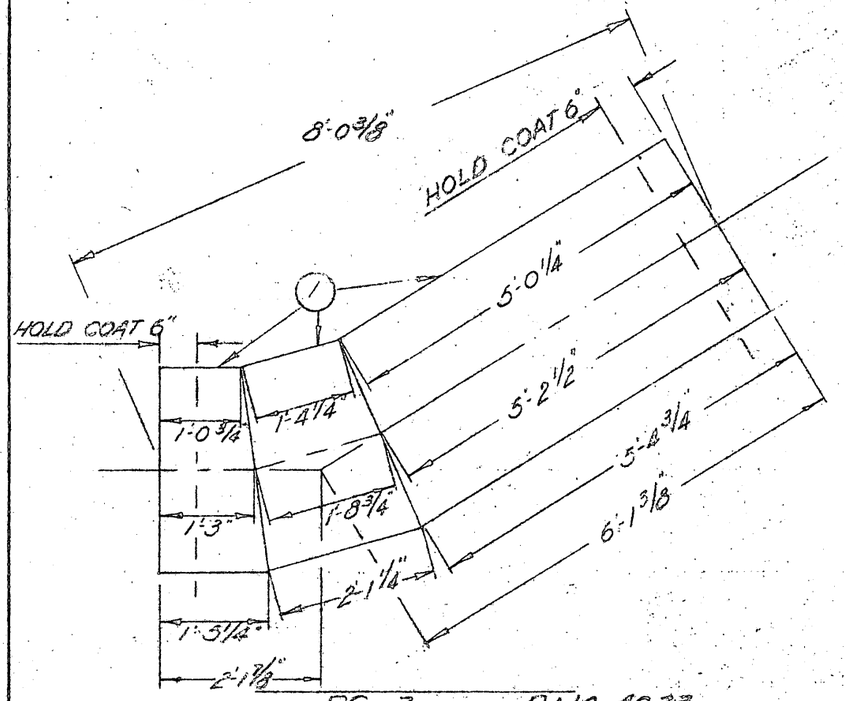

PC. 3 R.W.O. 4933
Δ = 31°36', R = 6'-3"
T = 1'-9 1/4" CUT 4 = 7°54'

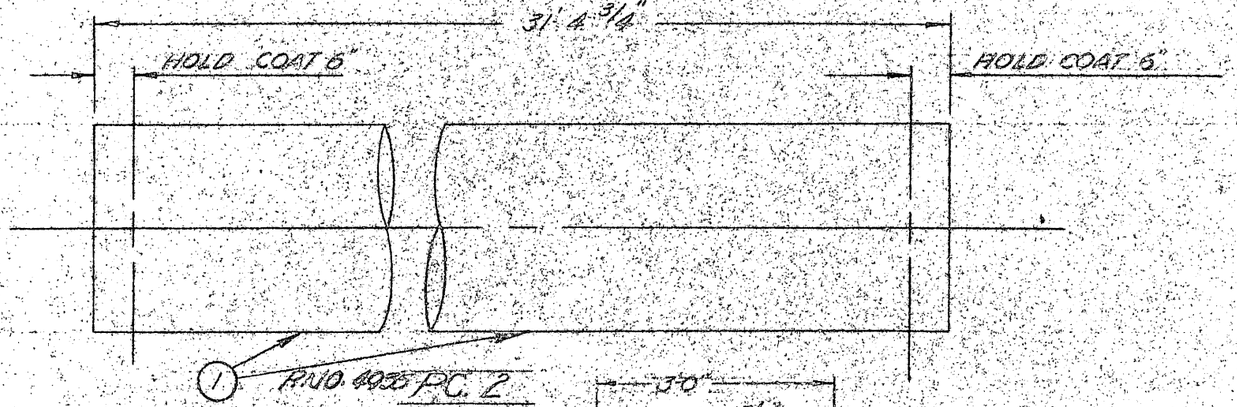

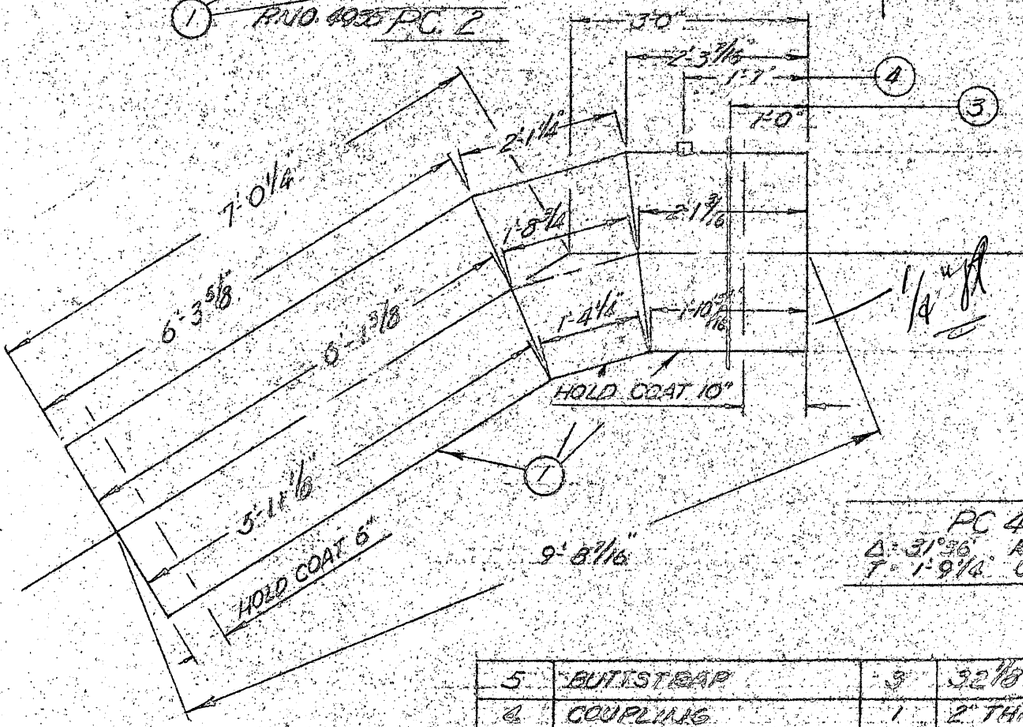

PC 4 R.W.O. 4933
Δ = 31°36', R = 6'-3"
T = 1'-9 1/4" CUT 4 = 7°54'

NOTE ; SHIP 3 OF ITEM (5) LOOSE

LINE FLUSH ON ALL

ITEM	DESCRIPTION	REQD	MATERIAL
5	BUTTSTRAP	3	32 1/8" OD x 1/2" t
4	COUPLING	1	2" THREADOLET
3	STIFFNER RING	1	31 1/8" ID x 31 7/8" OD x 3" x 3/8" t
2	FLANGE	1	30" x 150#
1	CYLINDER	72'-0"	31 7/8" O.D. x 5/16" t

MARK	BY	DATE	REVISION

F.O. 7029
DR. BY: JA
CHECKED:
DATE: 7-11

DETAILS
30" TERMINAL RESERVOIR
LINE R.W.O. 0D0706

AMERICAN PIPE & CONSTRUCTION CO.
NORTHERN CALIFORNIA DIVISION - HAYWARD, CALIF.
DWG. NO. D2-0345 SHEET 2 OF 2 SHEETS

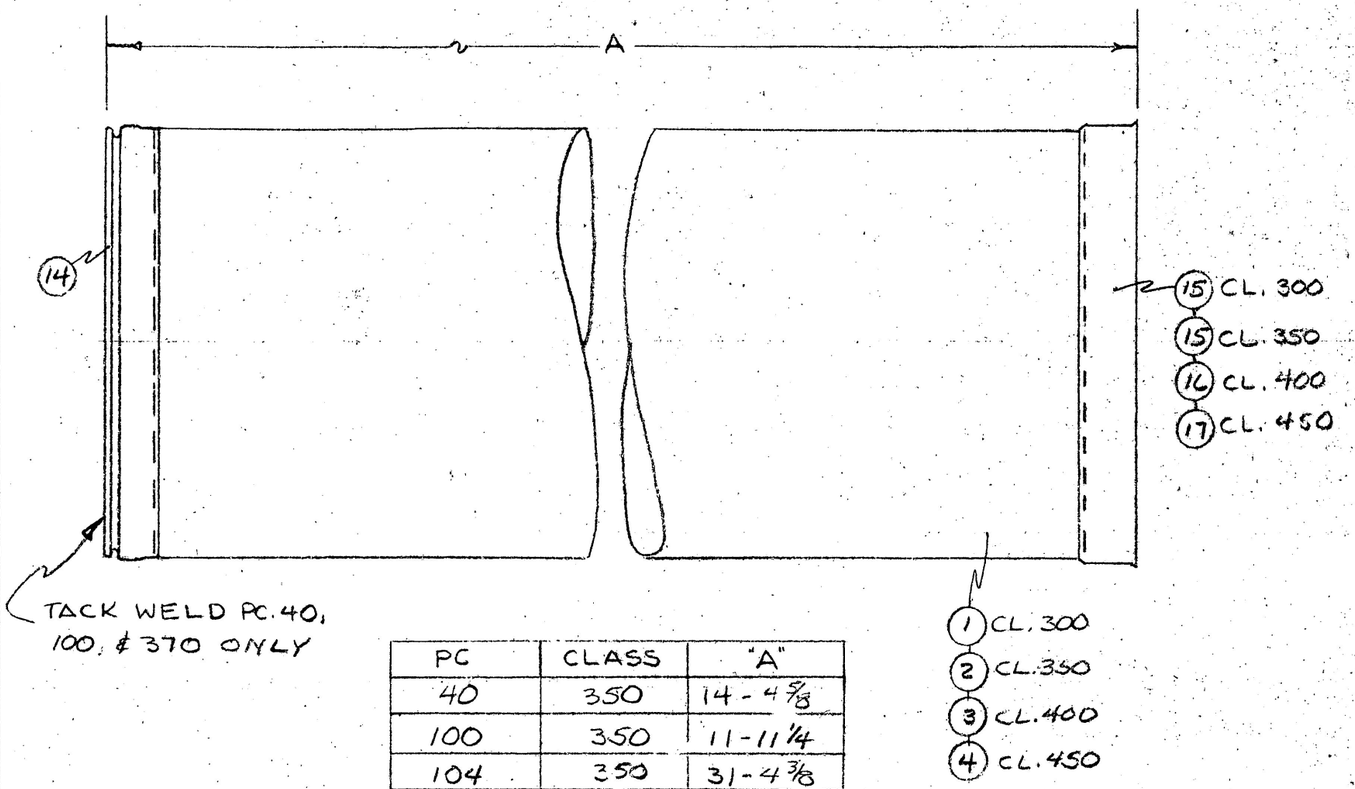

PC	CLASS	"A"
40	350	14 - 4 5/8
100	350	11 - 11 1/4
104	350	31 - 4 3/8
128	300	18 - 0 3/4
133	350	20 - 11 3/8
370	450	32 - 3 1/4
372	450	17 - 10 1/4
376	450	31 - 0 3/4
378	450	17 - 10 5/16
486	450	15 - 10 1/16
531	400	10 - 11 3/4
⚠ 4A	450	18'-0

P-4794

BEVELS ON STD. PIPE

PC	CLASS	BEVEL
8	400	2°-48'
14	350	2°-40'
20	"	3°-34'
54	"	3°-57'
62	"	2°-47'
63	"	2°-19'
64	"	"
65	"	"
66	"	"
67	300	"
69	"	"
70	"	"
71	"	"
73	"	"
74	"	"
75	"	"
76	"	"
77	"	"
78	"	"
79	"	"
80	"	"
81	"	"
82	"	"
122	"	"
295	450	3°-34'
298	"	2°-54'
325	"	3°-35'
406	"	4°-28'
475	"	3°-37'
328	"	3°-22'
490	"	5°-00

P-4795

50-4-102.79 AB

50-4-102.79AB

MARK	BY	DATE	REVISION
⚠	HAW	6-11-58	CHANGE IN ALIGN. CV DIST.

F.O 6348
DR. BY HAW
CHECKED
DATE 4-3-58

42" FTTGS
RUSSIAN RIVER DIV. "A"

AMERICAN PIPE & CONSTRUCTION CO.
NORTHERN CALIFORNIA DIVISION - HAYWARD, CALIF.
DWG. NO. D2-0814
SHEET 1 OF 1 SHEETS

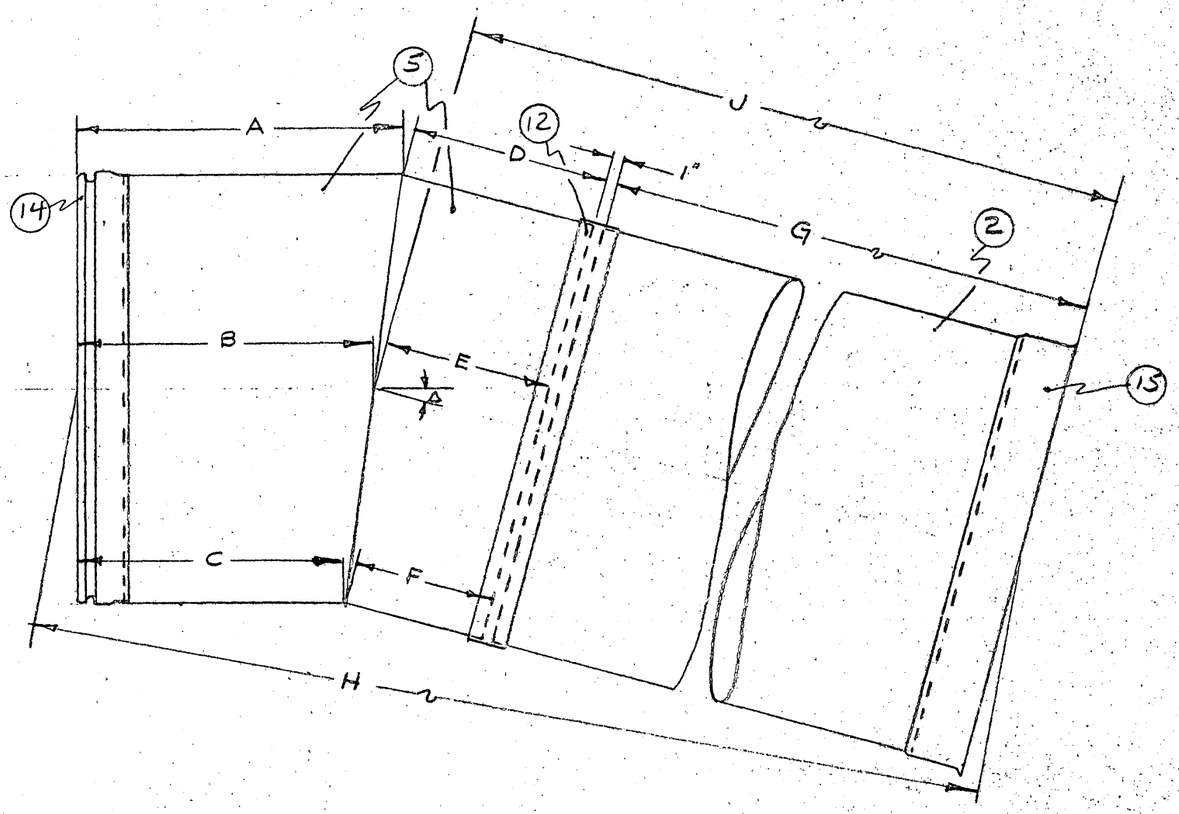

PC.	CLASS	A	B	C	D	E	F	G	H	Δ	CUT 4	J
45	350	4-7 5/8	4-5 5/8	4-4 1/4	1-7 3/8	1-6	1-4 5/8	17-8 3/8	23-8 5/8	7°-13'	3°-36'	19-3 3/8
97	350	4-4 1/2	4-1 1/2	3-11	1-8 3/4	1-6 1/4	1-3 3/4	31-10 1/4	37-5 1/8	13°-02'	6°-31'	33-5 1/2
169	350	3-0 3/8	2-11 3/16	2-10	1-7 3/16	1-6	1-4 13/16	31-10 1/4	36-4 1/4	6°-06'	3°-03'	33-5 1/4

P-47960

SEE 50-4-102.81AB

50-4-102.80AB

MARK	BY	DATE	REVISION

F.O. 6348
DR. BY: H.W
CHECKED:
DATE: 4-3-9

RUSSIAN RIVER - DIV. A"
42" FTTGS

AMERICAN PIPE & CONSTRUCTION CO.
NORTHERN CALIFORNIA DIVISION - HAYWARD, CALIF.
DWG. NO. D2-0814
SHEET 17 OF SHEETS

REVEL AS SHOWN @ 6°-0

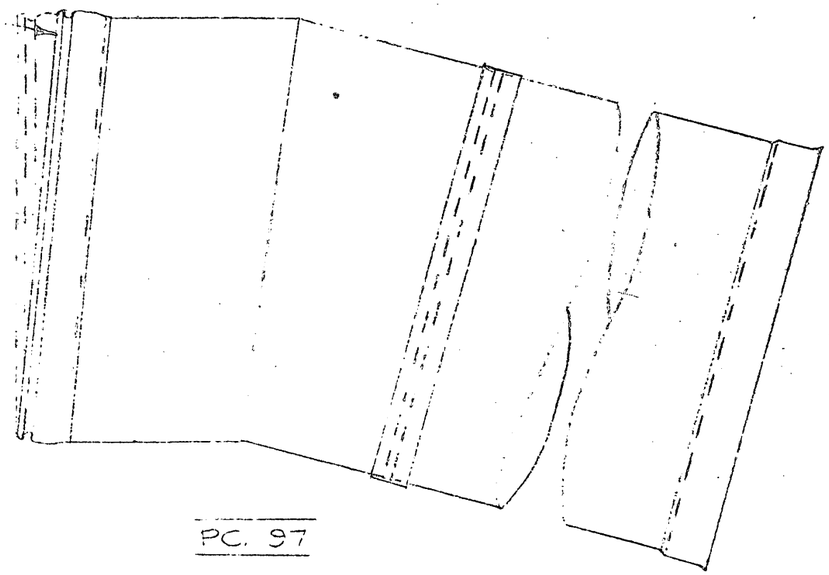

PC. 97

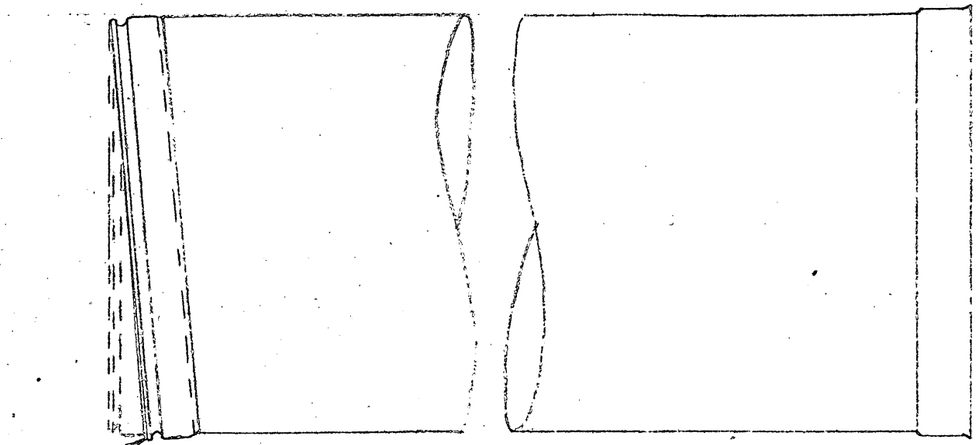

REVEL AS SHOWN @ 4° 15'

PC. 102

P-4905

50-4-102.81AB

MARK	BY	DATE	REVISION	F.O.6348	FIELD MODIFICATIONS FOR LINE ADJUST PAST STA. 28+76 TO STA 31+73 - RUSSIAN RIVER DIVISION "A"	AMERICAN PIPE & CONSTRUCTION CO. NORTHERN CALIFORNIA DIVISION–HAYWARD, CALIF.	
				DR. BY: HAW		DWG. NO. D2-0843	SHEET 2 OF SHEETS
				CHECKED:			
				DATE: 7/10/53			

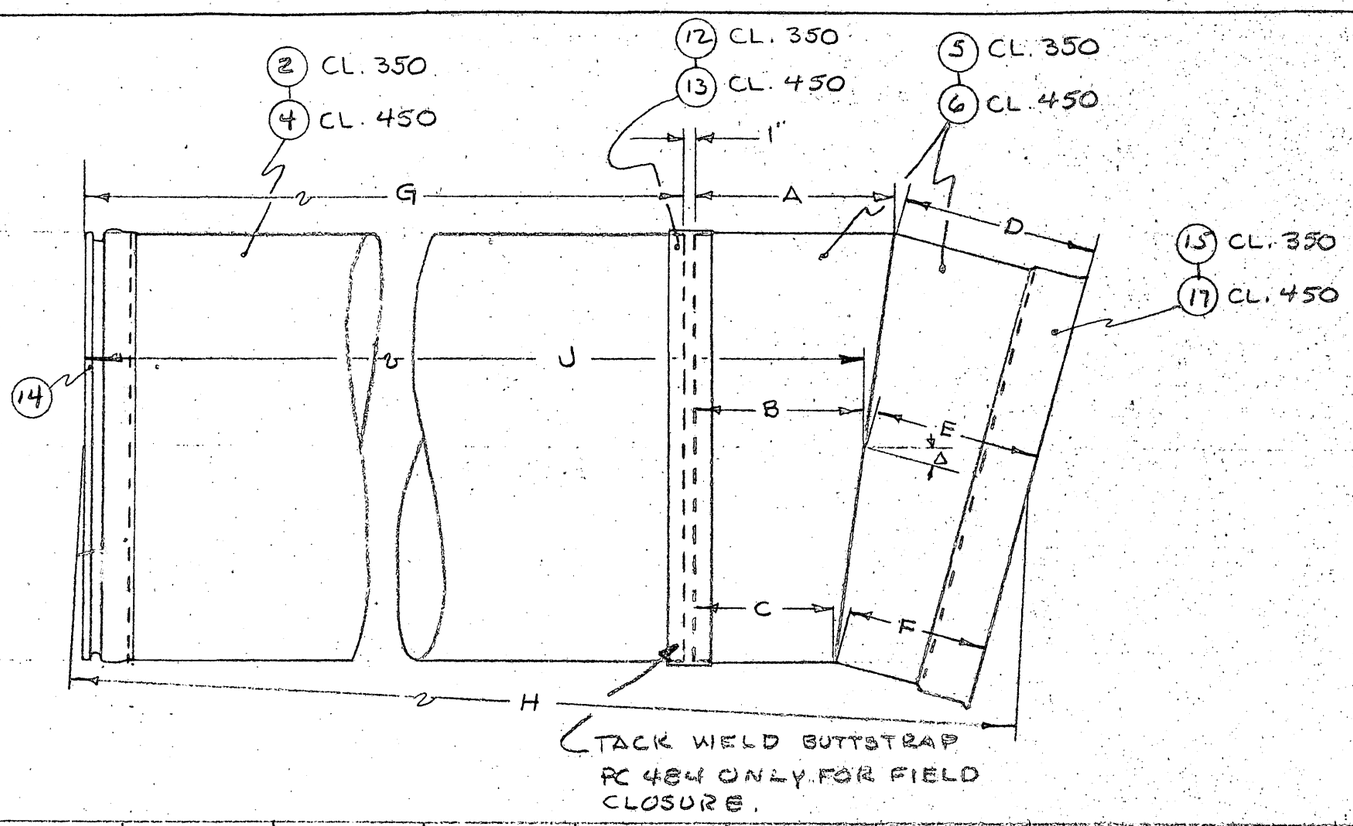

PC	CLASS	A	B	C	D	E	F	G	H	Δ	CUT ∠	J
23	350	1-7 5/8	1-6	1-4 3/8	1-7 5/8	1-6	1-4 3/8	25-11 7/16	29-0 1/4	8°-37'	4°-18'	27-6 3/16
396	450	1-8 5/16	1-6	1-3 11/16	1-8 5/16	1-6	1-3 4/16	27-6 3/8	30-7	12°-03'	6°-02'	29-1 3/8
484	450	1-8 5/16	1-6	1-3 11/16	1-8 5/16	1-6	1-3 11/16	12-4 13/16	15-5 7/16	12°-07'	6°-04'	13-11 13/16
520	450	1-8	1-6	1-4	1-8	1-6	1-4	29-6 1/4	32-6 15/16	10°-24'	5°-12'	31-1 1/4

P-4796

50-4-103.82 AB

MARK	BY	DATE	REVISION

F.O. 6348
DR BY HAW
CHECKED
DATE 4 3 8

42" FTGS
RUSSIAN RIVER - DIV. "A"

AMERICAN PIPE & CONSTRUCTION CO.
NORTHERN CALIFORNIA DIVISION - HAYWARD, CALIF.
DWG. NO. D2-0814
SHEET 18 OF SHEETS

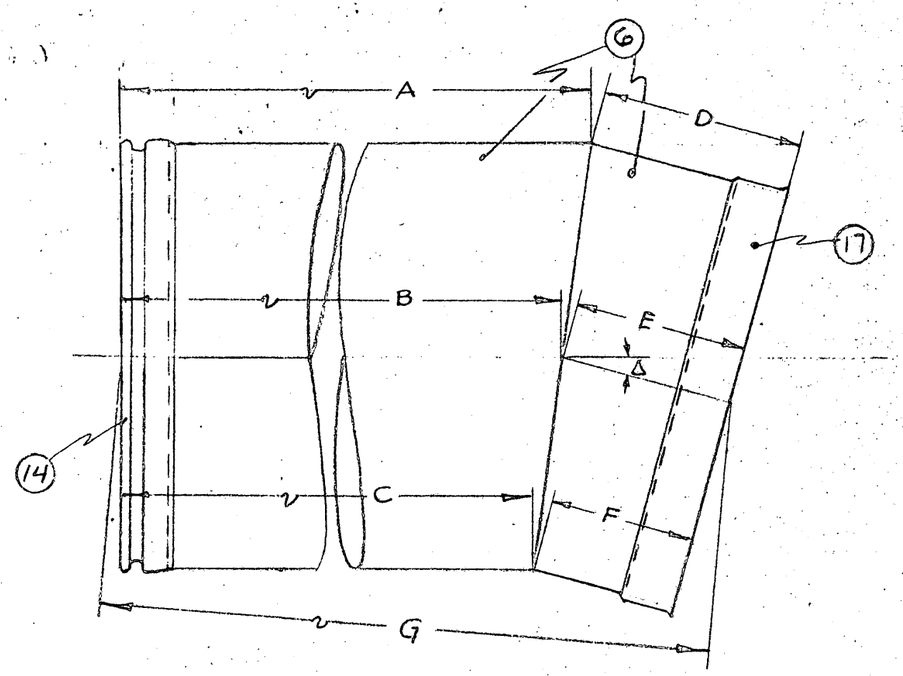

PC.	CLASS	A	B	C	D	E	F	G	Δ	CUT ℄
346	450	11-0 13/16	10-10 13/16	10-10 7/16	1-7 1/8	1-6	1-4 7/8	12-4 5/8	6°-0	3'-0
401	450	4-2 5/8	4-0 5/16	3-10	1-8 5/16	1-6	1-3 11/16	5-6 5/8	11°-56'	5°-58'

P-4797

50-4-102.83AR

MARK	BY	DATE	REVISION
1	HAW	6/11/58	DELETE PC. 1

F.O. 6348
DR. BY: HAW
CHECKED: [illegible]
DATE: 4-3-58

RUSSIAN RIVER - DIV. "A"
42" FTTGS

AMERICAN PIPE & CONSTRUCTION CO.
NORTHERN CALIFORNIA DIVISION - HAYWARD, CALIF.
DWG. NO. D2-0814
SHEET 19 OF SHEETS

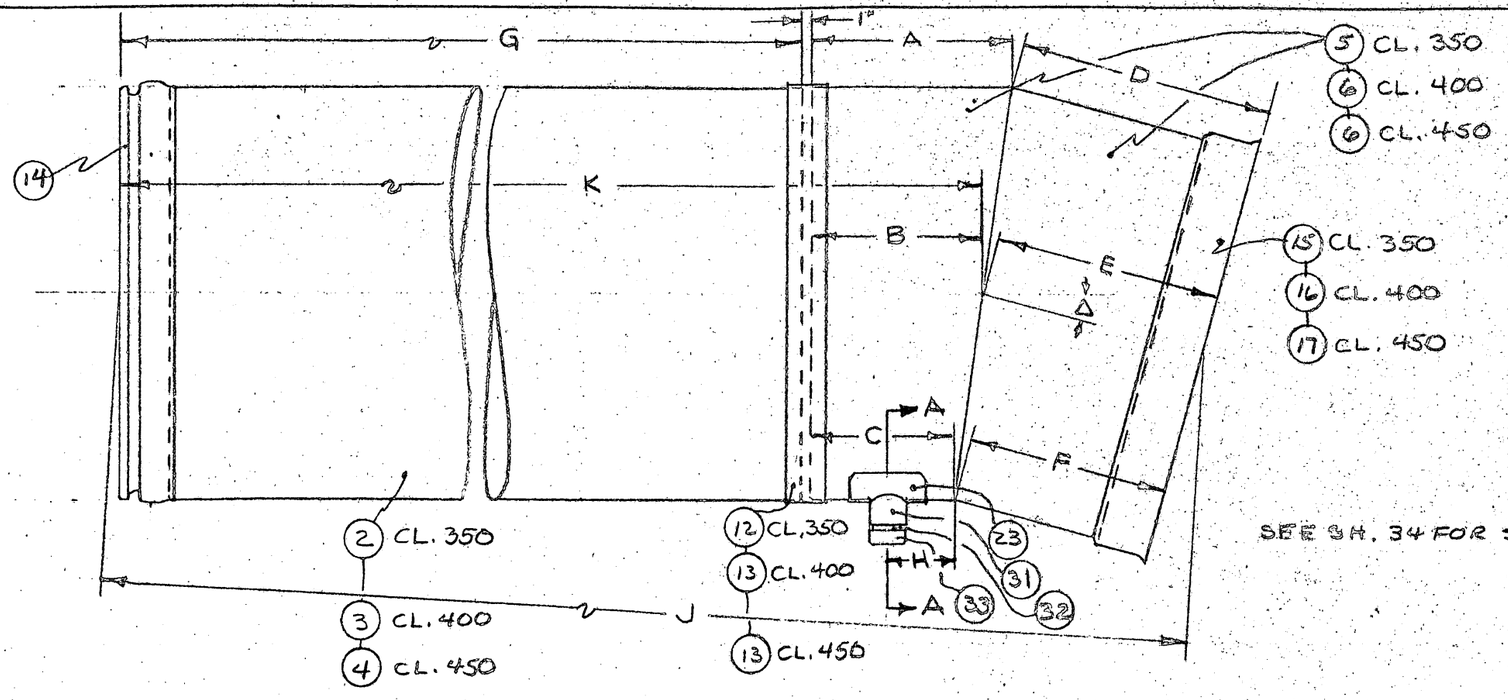

SEE SH. 34 FOR SECT. A-A

PC.	CLASS	A	B	C	D	E	F	G	H	J	Δ	CUT &	K
165	350	1-7 3/8	1-6	1-4 5/8	1-7 3/8	1-6	1-4 5/8	16-9 3/4	0-7 5/8	19-10 5/8	7°-16'	3°-38'	18-4 3/4
177	350	1-7 1/8	1-6	1-4 7/8	1-7 1/8	1-6	1-4 7/8	21-6 5/8	0-8	24-7 3/16	5°-53'	2°-57'	23-1 5/8
426	450	1-7 3/8	1-6	1-4 5/8	1-7 3/8	1-6	1-4 5/8	28-6	0-6	31-6 7/8	7°-20	3°-40'	30-1
450	450	1-7 7/8	1-6	1-4 1/8	1-7 7/8	1-6	1-4 1/8	25-11 3/8	0-6	29-0 1/8	9°-46'	4°-53'	27-6 3/8
478	450	1-8 3/8	1-6	1-3 5/8	1-8 3/8	1-6	1-3 5/8	7-2	0-6	10-3 13/16	12°-11'	6°-06'	8-9
544	400	1-7 9/16	1-6	1-4 11/16	1-11 1/2	1-10 3/16	1-8 7/8	21-11 3/8	0-5	25-4 3/16	6°-50'	3°-25'	23-6 3/8

P-4818

50-4-102.84-AB

MARK	BY	DATE	REVISION

F.O. 6348
DR. BY: HAW
CHECKED:
DATE: 4-4-

RUSSIAN RIVER - DIV. 'A'
42" FTTGS.

AMERICAN PIPE & CONSTRUCTION CO.
NORTHERN CALIFORNIA DIVISION - HAYWARD, CALIF.

DWG. NO. D2-0814 | SHEET 20 OF SHEETS

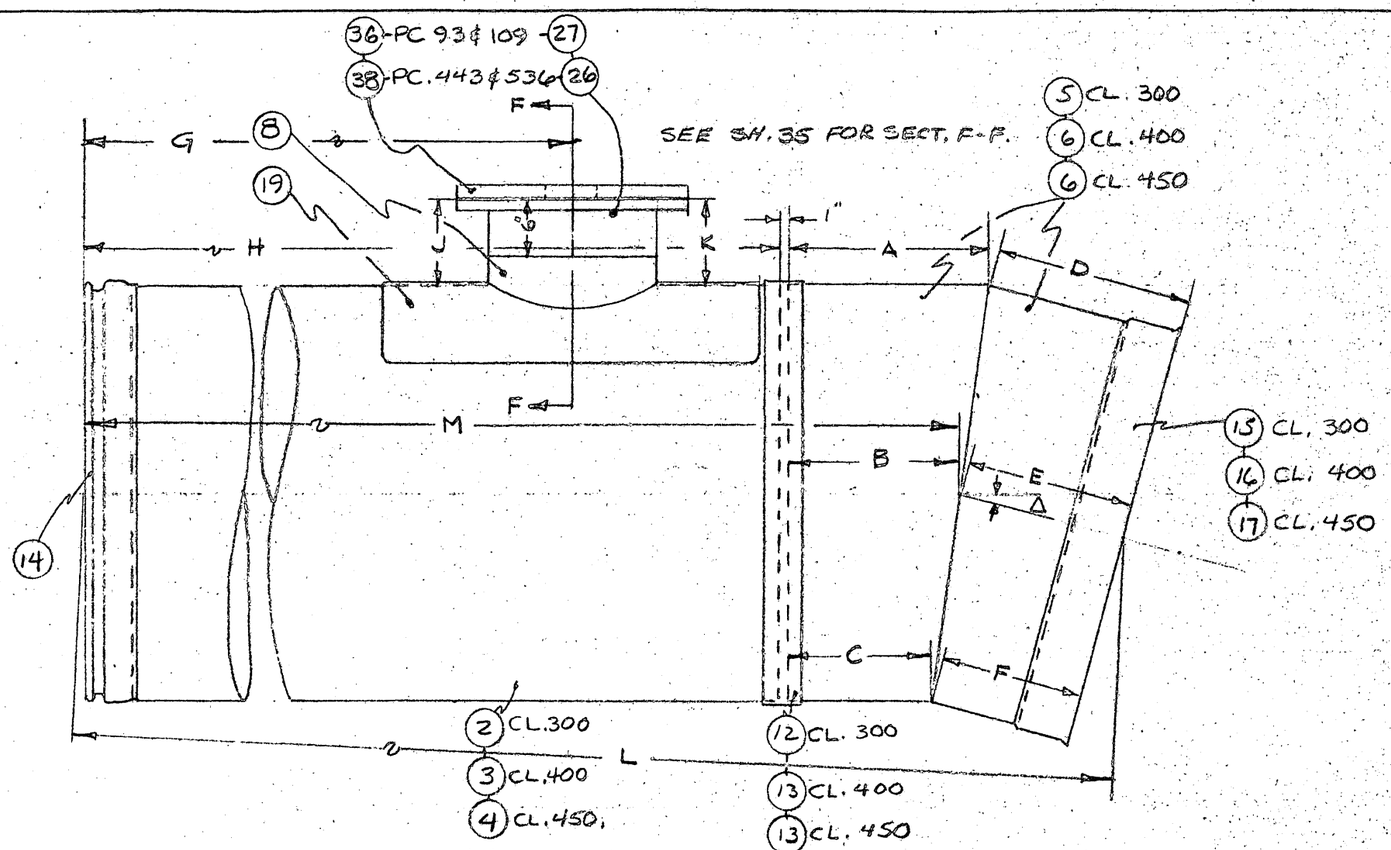

PC.	CLASS	A	B	C	D	E	F	M
93	300	1 - 7 11/16	1-6	1 - 4 5/16	1 - 7 11/16	1-6	1 - 4 5/16	12 - 1 7/16
109	300	1 - 7 3/8	1-6	1 - 4 5/8	1 - 7 3/8	1-6	1 - 4 5/8	27 - 5 3/4
443	450	1 - 7 1/8	1-6	1 - 4 3/8	1 - 7 1/8	1-6	1 - 4 7/8	19 - 1
536	400	1 - 8 3/4	1-6	1 - 3 1/4	1 - 8 3/4	1-6	1 - 3 1/4	30 - 9 3/4

PC	G	H	J	K	L	Δ	CUT ∡
93	8 - 2 3/4	10 - 6 7/16	0 - 9	0 - 9	13 - 7 1/4"	8° - 42'	4° - 21'
109	23 - 9 3/4	25 - 11 3/4	0 - 11 3/8	0 - 9	28' - 11 5/8	7° - 15'	3° - 38'
443	13 - 7 1/8	17 - 6	0 - 9	0 - 9	26 - 7 1/8	5° - 58'	2° - 59'
536	25 - 2	29 - 2 3/4	1 - 0 1/2	0 - 9	32 - 3 1/4	14° - 16'	7° - 08'

P - 4798

50-4-102, 85AB

MARK	BY	DATE	REVISION	F.O. 6348	RUSSIAN RIVER - DIV. "A"	AMERICAN PIPE & CONSTRUCTION CO.
				DR. BY: HAW		NORTHERN CALIFORNIA DIVISION - HAYWARD, CALIF.
				CHECKED:	42" FTTG S	DWG. NO. D2-0814
				DATE: 4-7-58		SHEET 21 OF SHEETS

PC. NO.	CLASS	O.D.	Δ	TAN	CUT ∡	A	B	C	D	INSIDE	℄	OUTSIDE	E	F	G	H	J	~~JT. BAND THICKNESS~~
105	300	~~43 7/8"~~	~~18°-13'~~	~~1-4 7/8~~	~~4°-13'~~	~~1-10 7/8~~	~~1-7 1/16~~	~~1-2 3/8~~	1-0 3/4	1 1/2	1-4 3/4	~~1-8 1/4~~	1-10 7/8	~~1-4 1/8~~	~~1-2 1/8~~	1-0 3/4	~~3-9 3/16~~	
373	450	"	23°-48	1-10	5°-57'	2-4	1-7 1/8	1-4 9/8	1-2 5/8	1-5 5/16	1-9 3/4	2-2 9/16	2-4	1-7 1/8	1-4 7/8	1-2 5/8	4-6 13/16	
377	"	"	23°-40'	"	5°-55'	"	"	"	"	"	"	"	"	"	"	"	4-6 13/16	
379	"	"	22°-14'	1-8 5/8	5°-34'	2-2 3/8	1-6 3/8	1-4 1/4	1-2 1/8	1-4 1/4	1-8 1/2	2-0 3/4	2-2 5/8	1-6 3/8	1-4 1/4	1-2 1/8	4-3 3/8	

P-4810

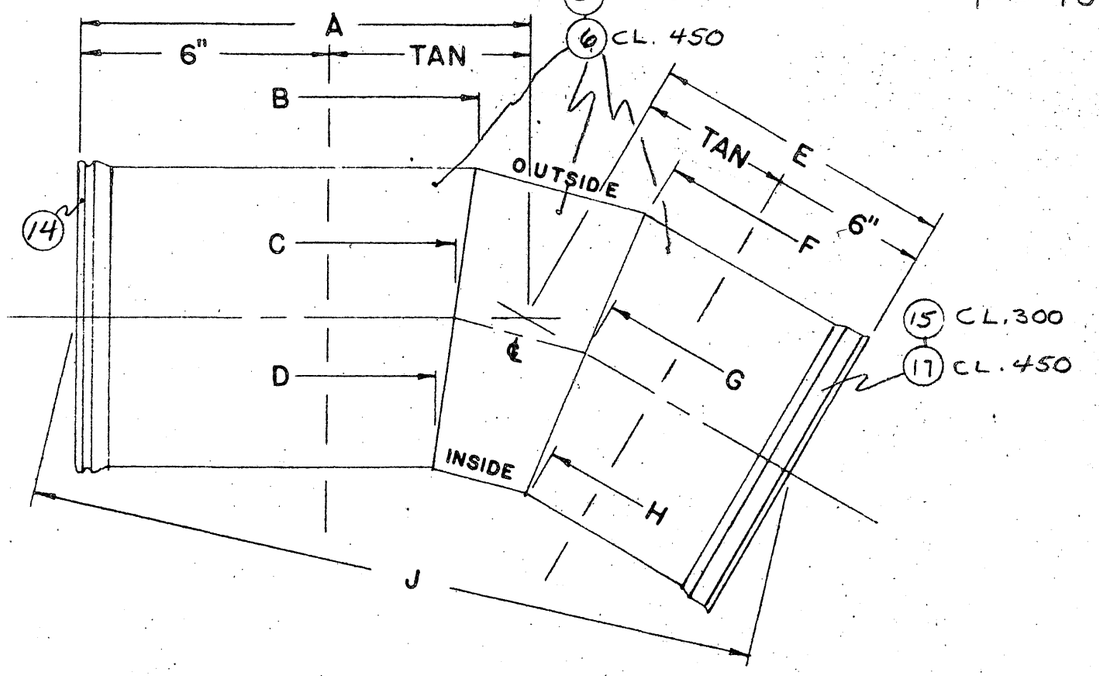

RADIUS = 2½ · I.D. = 8'-9"

50-4-102.86AE

MARK	BY	DATE	REVISION

F.O. 6348
DR. BY: HAW
CHECKED:
DATE: 4-3-58

DETAIL
TWO CUT ELBOWS
RUSSIAN RIVER - DIV. A

AMERICAN PIPE & CONSTRUCTION CO.
NORTHERN CALIFORNIA DIVISION, HAYWARD, CALIF.
DWG. NO. D2-0814
SHEET 22 OF SHEETS

STEP 1

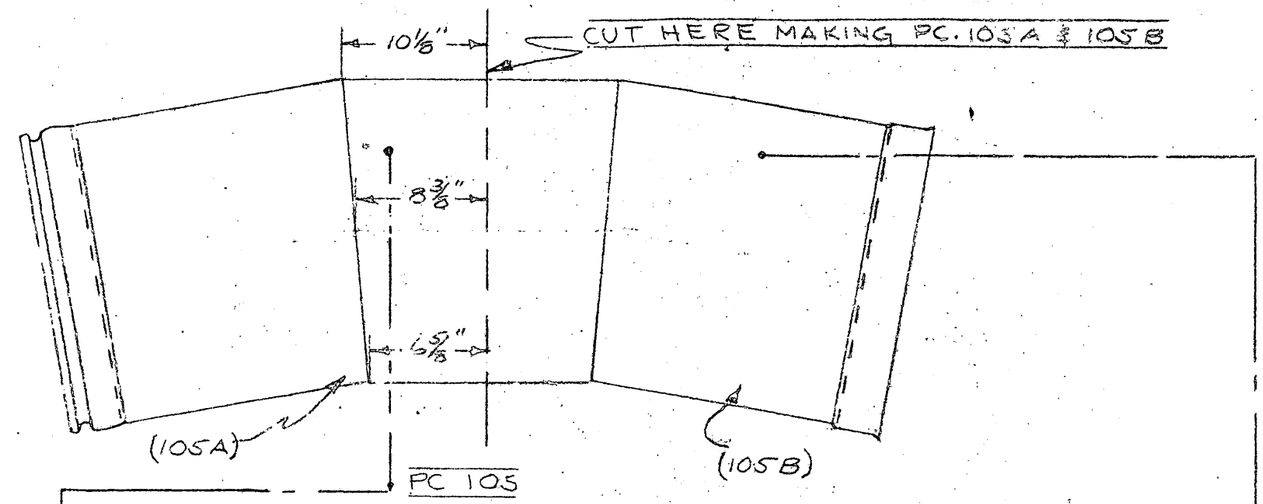

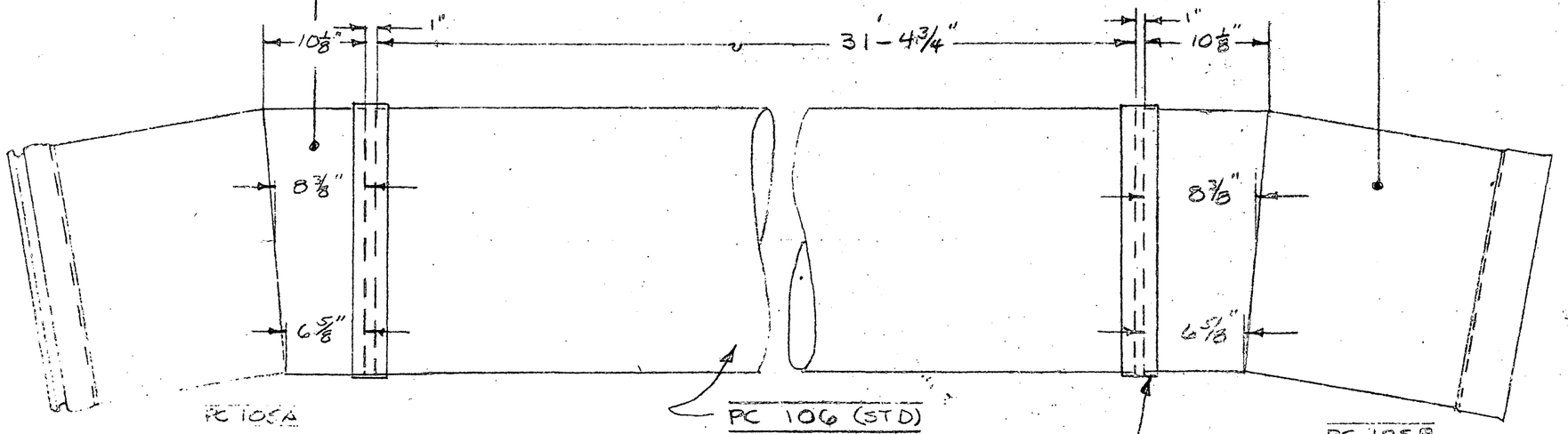

STEP 2

P-4908

50-4-102.87AB

MARK	BY	DATE	REVISION

F.O. 6248
DR. BY: HAW
CHECKED:
DATE: 7/10/58

FTTG MODIFICATIONS FOR LINE ADJUSTMENT, STA. 28+76 TO STA. 31+73, RUSSIAN RIVER DIVISION "A"

AMERICAN PIPE & CONSTRUCTION CO.
NORTHERN CALIFORNIA DIVISION—HAYWARD, CALIF.

DWG. NO. D2-0843

SHEET 3 OF SHEETS

PC. NO.	CLASS	O.D.	Δ	TAN	CUT ∢	A	B	C	D	INSIDE	℄	OUTSIDE	E	F	G	H	J	[redacted]
487	450	43 7/8"	27°-07	2-1 5/16	6°-47'	2-7 5/16	1-9 1/8	1-6 1/2	1-3 7/8	1-7 3/4	2-1	2-6 1/4	2-7 5/16	1-9 1/8	1-6 1/2	1-3 7/8		
134	350	"	18°-15'	1-4 7/8	4°-34'	1-10 7/8	1-4 1/8	1-2 3/8	1-0 5/8	1-4 5/16	1-4 13/16	1-8 5/16	1-10 7/8	1-4 5/8	1-2 3/8	1-0 5/8		
58	"	"	24'-56'	1-11 3/16	6°-14'	10-7 3/16	9-5 3/8	9-3 3/4	9-2 1/8	1-1 1/4	1-3 1/2	1-5 3/4	2-5 3/16	1-5 7/8	1-3 3/4	1-0 1/8		
532	400	"	23°-30'	1-9 13/16	5°-53'	2-3 13/16	1-7 1/16	1-4 13/16	1-2 9/16	1-4 1/8	1-9 5/8	2-3 1/8	2-3 13/16	1-7 1/16	1-4 13/16	1-2 9/16		
41	350	"	28°-08'	2-2 5/16	7°-02	2-8 5/16	1-9 7/8	1-6 15/16	1-4 1/4	1-8 1/2	2-1 7/8	2-7 1/4	2-8 5/16	1-9 5/8	1-6 15/16	1-4 1/4		

P-4811

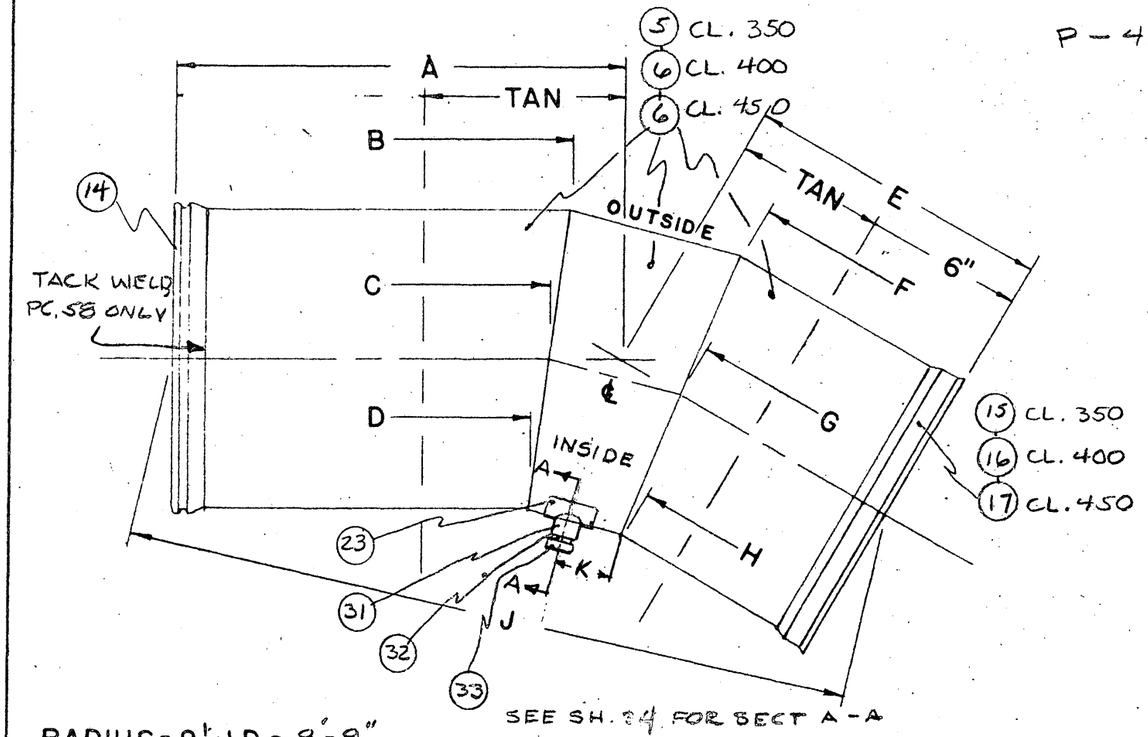

RADIUS = 2½ · I.D. = 8'-9"

PC	K
487	0-9 7/8
134	0-6 5/16
58	0-6 5/8
532	0-8 7/16
41	0-10 1/4

50-4-102.88 AB

MARK	BY	DATE	REVISION

F.O. 6348
DR. BY: HAW
CHECKED:
DATE: 4-4-58

DETAIL
TWO CUT ELBOWS
RUSSIAN RIVER - DIV. "A"

AMERICAN PIPE & CONSTRUCTION CO.
NORTHERN CALIFORNIA DIVISION, HAYWARD, CALIF.
DWG. NO: D2-0814
SHEET 23 OF SHEETS

PC. NO.	CLASS	O.D.	Δ	TAN	CUT ∠	A	B	C	D	INSIDE	℄	OUTSIDE	E	F	G	H	J	ST. SAND BLASTING
32	300	43 7/8	15°-27'	1-2 1/4	3°-52'	9-0 9/16	8-6 7/8	8-5 3/8	8-3 7/8	0-11 1/4	1-2 1/4	1-5 1/4	1-8	1-2 3/8	1-0 7/8	0-11 3/8	10-7 15/16	
371	450	"	23°-16'	1-9 5/8	5°-49'	4-2 7/16	3-5 3/4	3-3 1/2	3-1 1/4	1-4 7/8	1-9 3/8	2-1 7/8	2-3 5/8	1-6 5/16	1-4 1/16	1-2 7/16	6-4 9/16	
526	400	"	28°-08'	2-2 5/16	7°-02'	5-6 1/8	4-7 9/16	4-4 13/16	4-2 1/16	1-8 1/2	2-1 5/16	2-7 3/8	2-2 5/16	1-3 1/16	1-1	0-10 5/16	7-6 3/16	

FOR SIZE OF REDUCING FLG'S, SEE TABLE AT RT.

SEE SHT. 35 FOR SECT F-F

P-4812

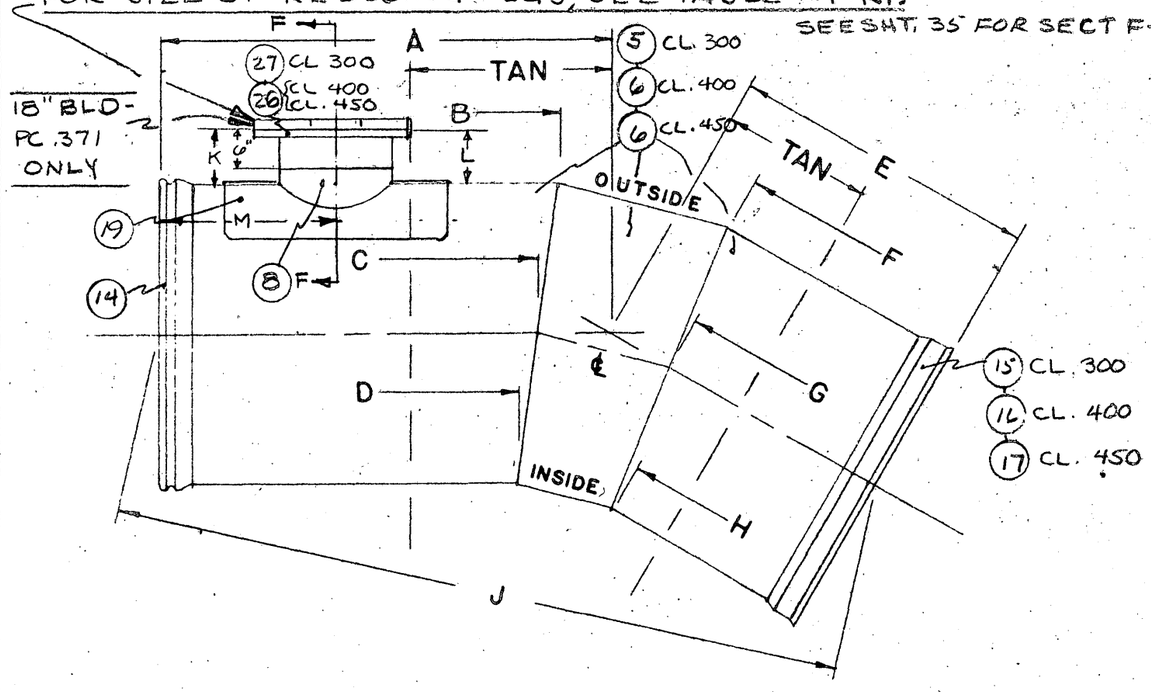

RADIUS = 2½ · I.D. = 8'-9"

NOTE: SEE DETAIL A, SH. 35.

PC	K	L	M	SIZE RED. FLG
32	0-9 11/16	0-9	6-8 5/8	18"X8" (35)
371	0-9	0-9	2-1	18" BLD. (34)
526	1-2 1/4	0-9	2-11 9/16	18"X6" (37)

DETAILS OF REDUCING FLGS SHOWN ON SH. 35

50-4-102.89AB

MARK	BY	DATE	REVISION

F.O. 6348
DR. BY: HAW
CHECKED:
DATE: 4-4-58

DETAIL
TWO CUT ELBOWS
RUSSIAN RIVER - DIV "A"

AMERICAN PIPE & CONSTRUCTION CO.
NORTHERN CALIFORNIA DIVISION, HAYWARD, CALIF.
DWG. NO. D2-0814
SHEET 24 OF SHEETS

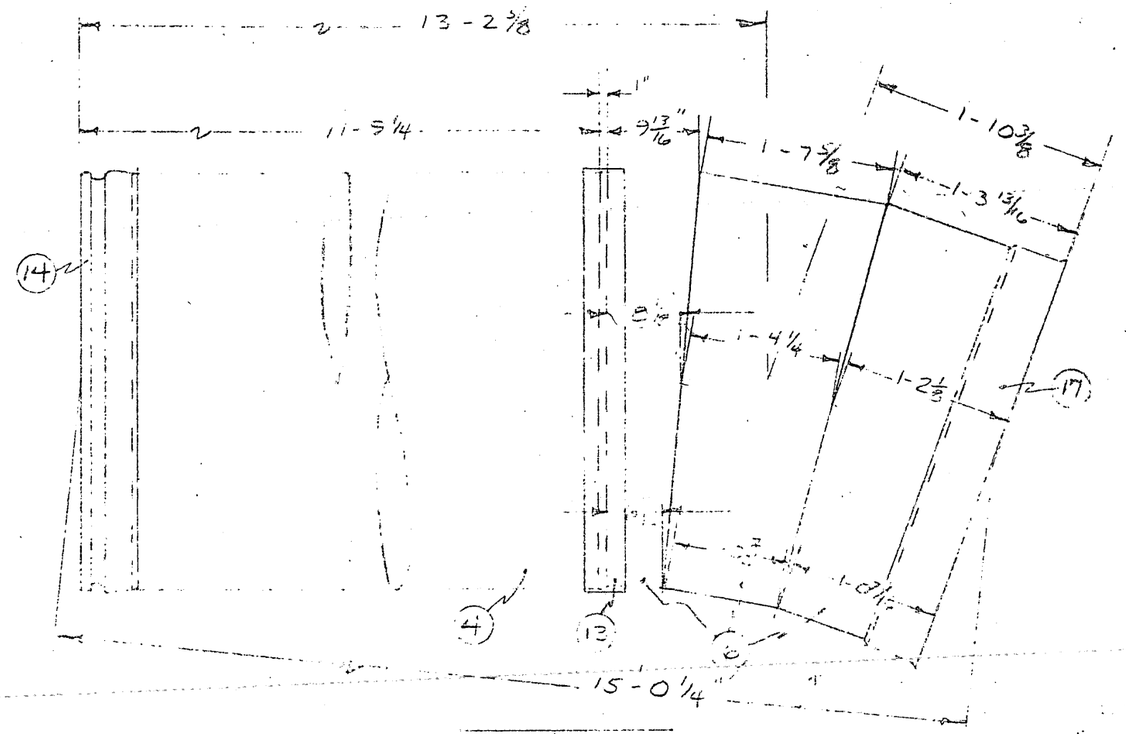

PC. 4
CLASS 400
Δ = 17° 41'
CUT ∠ = 4° 22'
R = 8 - 9"
T = 1 - 4 3/8

P-4913

50-4-102.90 AB

MARK	BY	DATE	REVISION	F.O. 6348	RUSSIAN RIVER AQUEDUCT #1 DIVISION 'A'	AMERICAN PIPE & CONSTRUCTION CO. NORTHERN CALIFORNIA DIVISION - HAYWARD, CALIF.
				DR. BY: HA		DWG. NO. D2-0814
				CHECKED:		SHEET 24A OF SHEETS
				DATE: 6-11-58		

PC.NO.	CLASS	O.D.	Δ	TAN.	CUT ∡	A	B	C	D	INSIDE	℄	OUTSIDE	E	F	G	H	J	[redacted]
129	300	43 7/8"	45°-43'	3-8 1/4	7°-37'	4-2 1/4	1-10 15/16	1-8	1-5 1/16	1-10 3/16	2-4 1/16	2-9 15/16	4-2 1/4	1-10 15/16	1-8	1-5 1/16	7-6 3/8	
240	400	"	44°-24'	3-6 7/8	7°-24'	9-3	7-0 5/8	6-9 3/4	6-6 7/8	1-9 9/16	2-3 1/4	2-8 15/16	4-0 7/8	1-10 1/2	1-7 5/8	1-4 3/4	12-6 5/8	

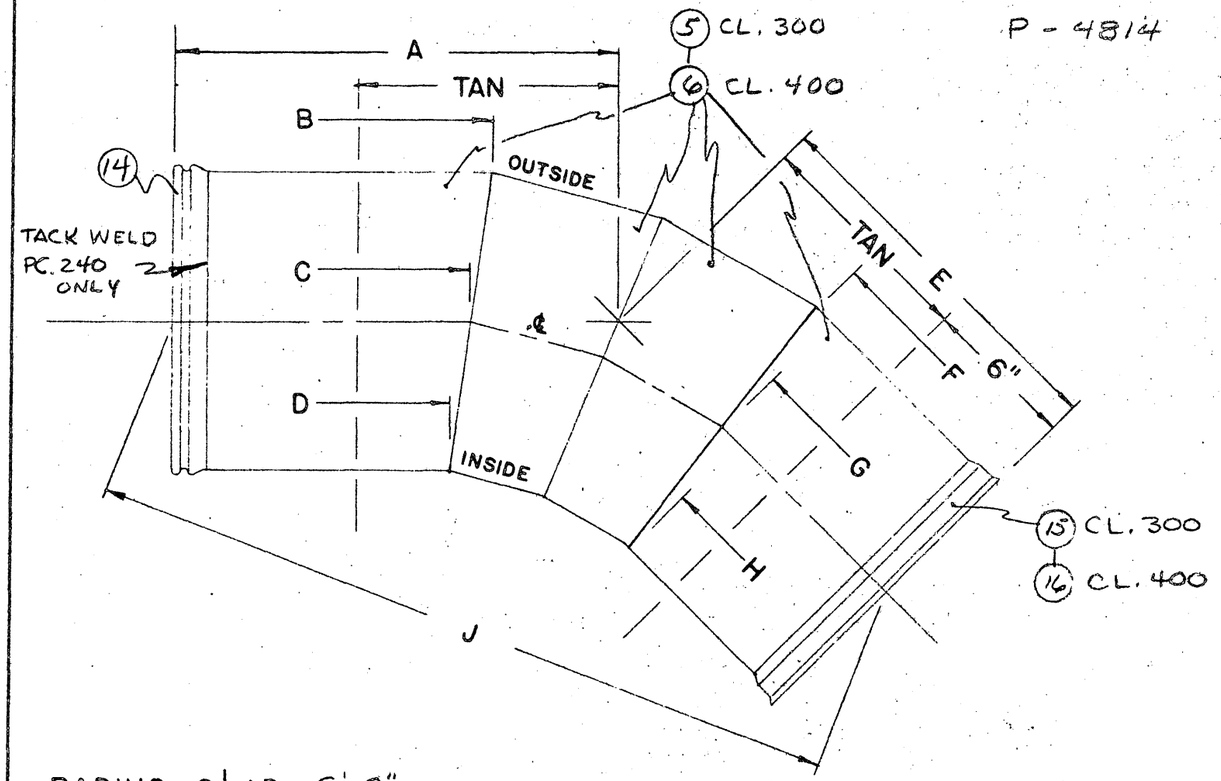

P - 4814

RADIUS = 2 1/2 I.D. = 8'-9"

50-4-102-91AB

MARK	BY	DATE	REVISION

F.O. 6348
DR. BY: HAW
CHECKED
DATE 4 3 [illegible]

DETAIL
THREE CUT ELBOWS
RUSSIAN RIVER - DIV. A

AMERICAN PIPE & CONSTRUCTION CO.
NORTHERN CALIFORNIA DIVISION, HAYWARD, CALIF.

DWG. NO. D2-0814

SHEET 25 OF SHEETS

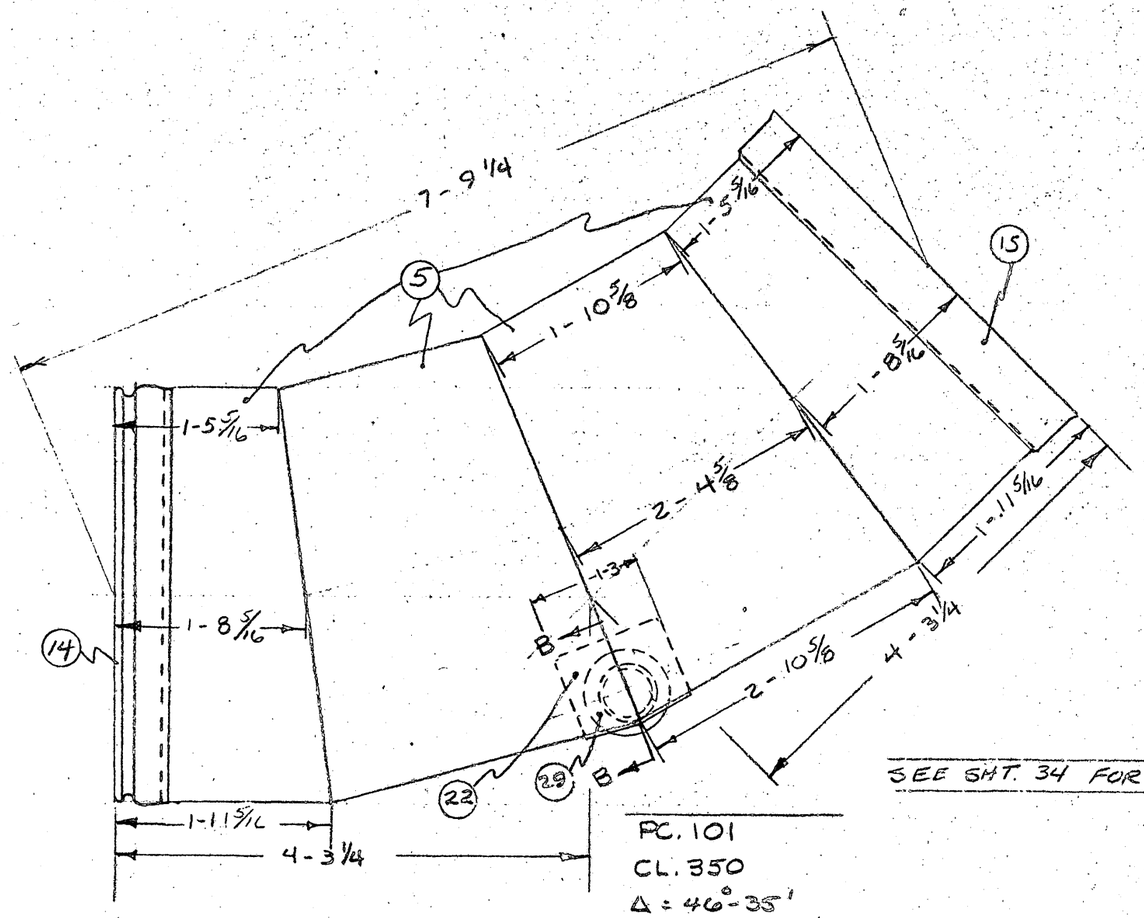

SEE SHT. 34 FOR SECT. B-B

PC. 101
CL. 350
Δ = 46°-35'
CUT ∡ = 7°-36'
R = 8'-9"
T = 3'-9 1/4"

P-4809

SEE SHT. 35 FOR SECT F-F

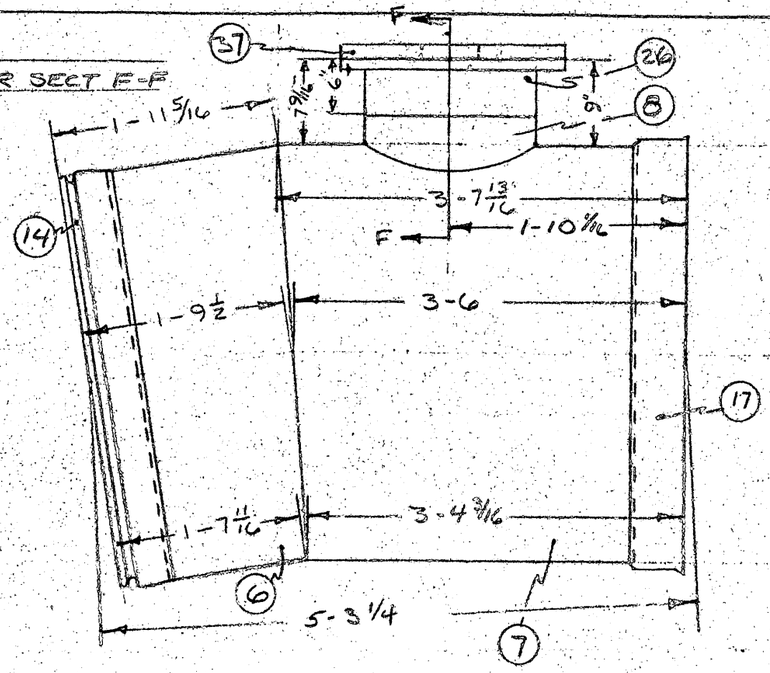

PC. 411
CL. 450
Δ = 9°-24'
CUT ∡ = 4°-42'

P-4799

50-4-102, 92AB

MARK	BY	DATE	REVISION

F.O. 6348
DR. BY HAW
CHECKED
DATE 4-1-8

RUSSIAN RIVER - DIV. "A"
42" FTTGS

AMERICAN PIPE & CONSTRUCTION CO.
NORTHERN CALIFORNIA DIVISION-HAYWARD, CALIF.

DWG. NO. D2-0814 SHEET 26 OF SHEETS

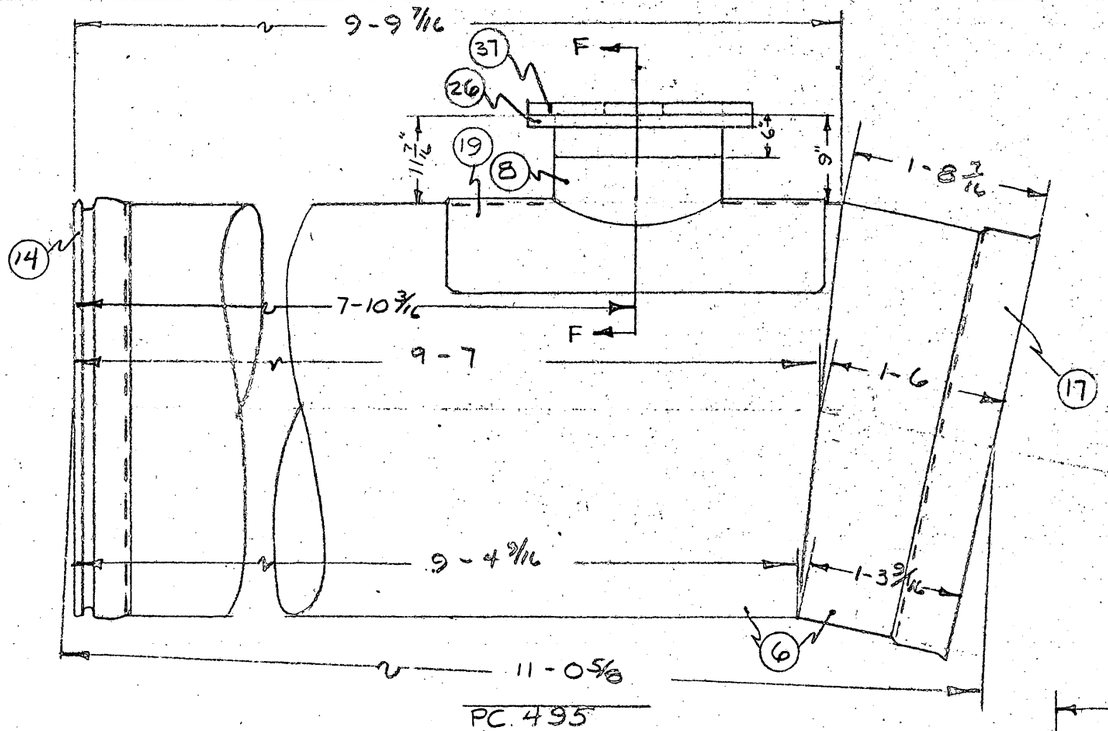

PC. 495
CL. 450
Δ = 12°-41'
CUT ∡ : 6°-20' ✓
P-4799

SEE SHT. 35 FOR SECT F-F

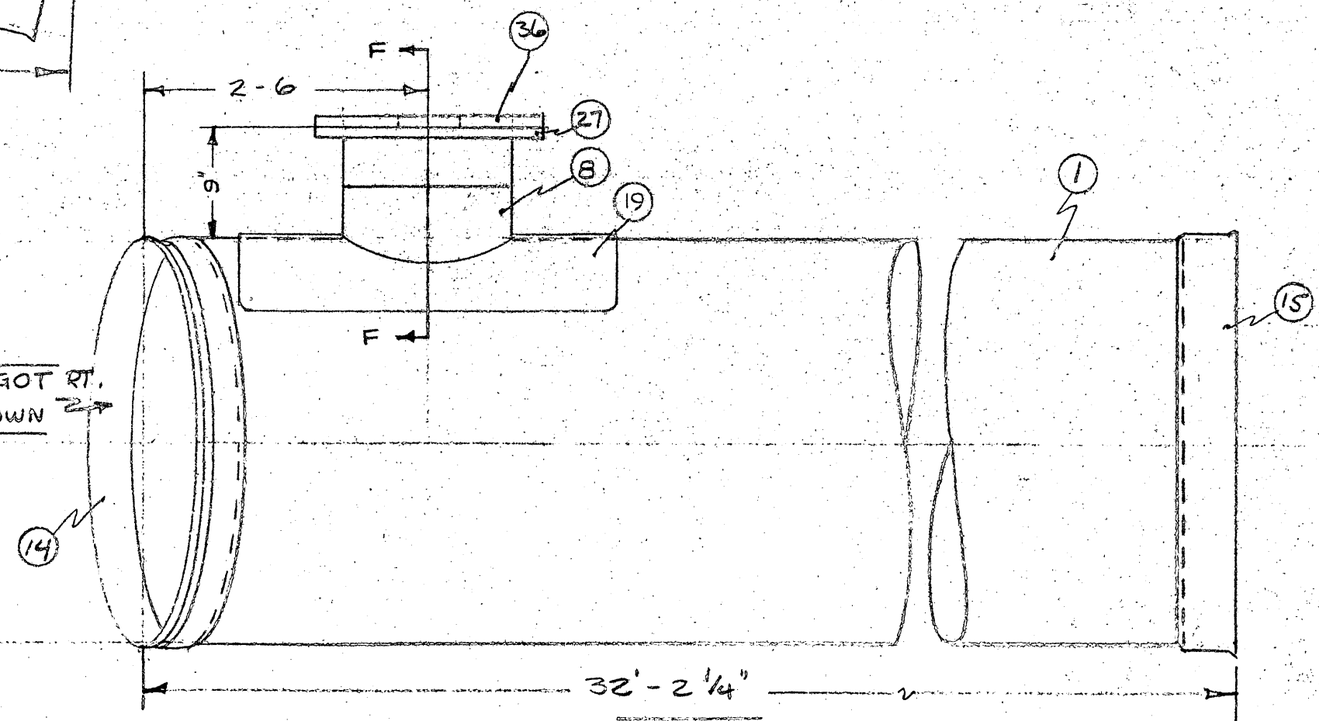

PC. 72
CL. 300 ✓
P-4803

50-4-102.93AB

MARK	BY	DATE	REVISION

F.O. 6348
DR. BY: HAW
CHECKED
DATE 4-7-58

RUSSIAN RIVER - DIV. "A"
42" FTTGS

AMERICAN PIPE & CONSTRUCTION CO.
NORTHERN CALIFORNIA DIVISION - HAYWARD, CALIF.
DWG. NO. D2-0814
SHEET 27 OF SHEETS

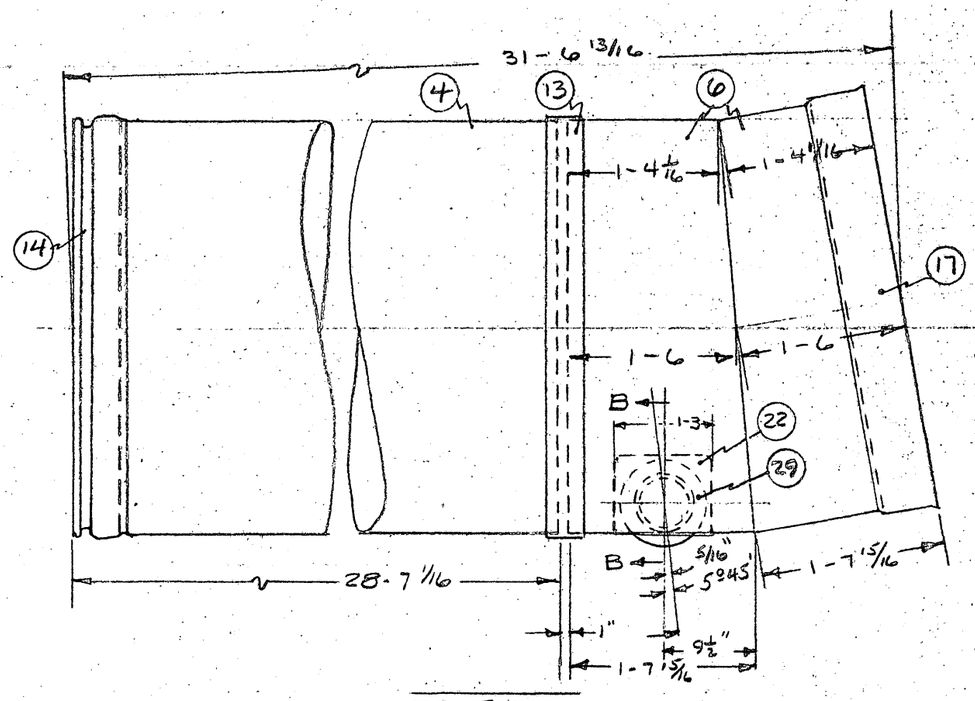

PC. 510
CL. 450
Δ = 10°-08
CUT Δ = 5°-04' ✓
P-4802

SEE SH. 34 FOR SECT B-B

SEE SH. 35 FOR SECT F-F

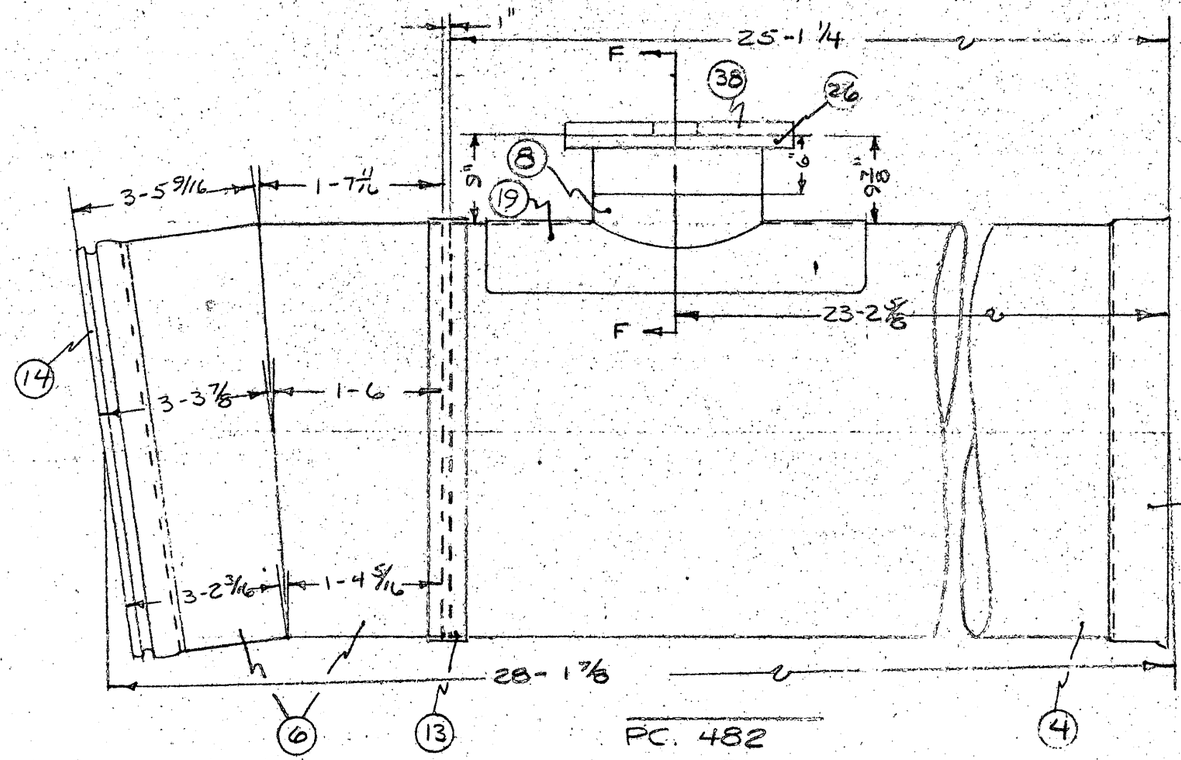

PC. 482
CL. 450
Δ = 8°-44'
CUT Δ = 4°-22' ✓
P-4798

50-4-102.94 RD

MARK	BY	DATE	REVISION

F.O. 6348
DR. BY: HAW
CHECKED
DATE: 4-7-53

RUSSIAN RIVER - DIV. 'A'
42" FTTGS

AMERICAN PIPE & CONSTRUCTION CO.
NORTHERN CALIFORNIA DIVISION - HAYWARD, CALIF.

DWG. NO. D2-0814 | SHEET 28 OF SHEETS

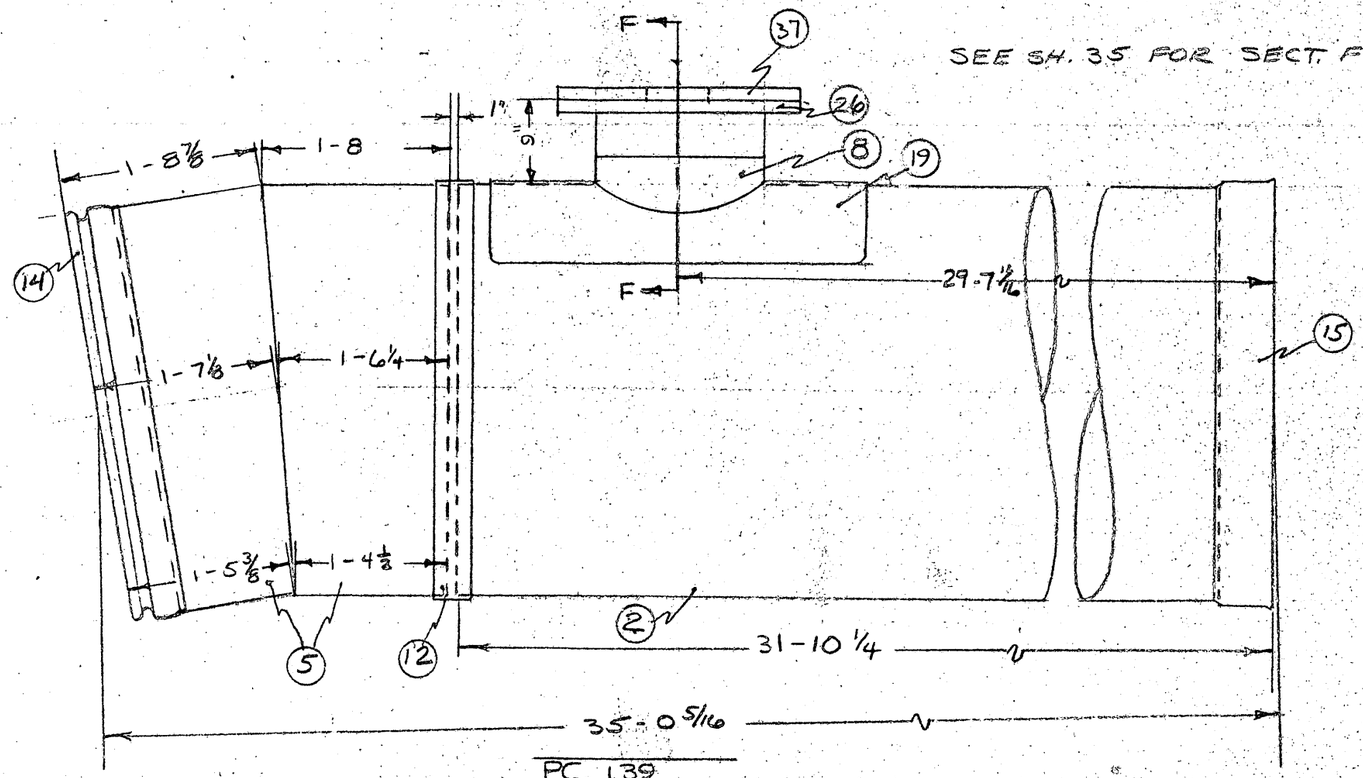

PC. 139
CL. 350
Δ = 9°-10'
CUT ∠ = 4°-35'

P-4798

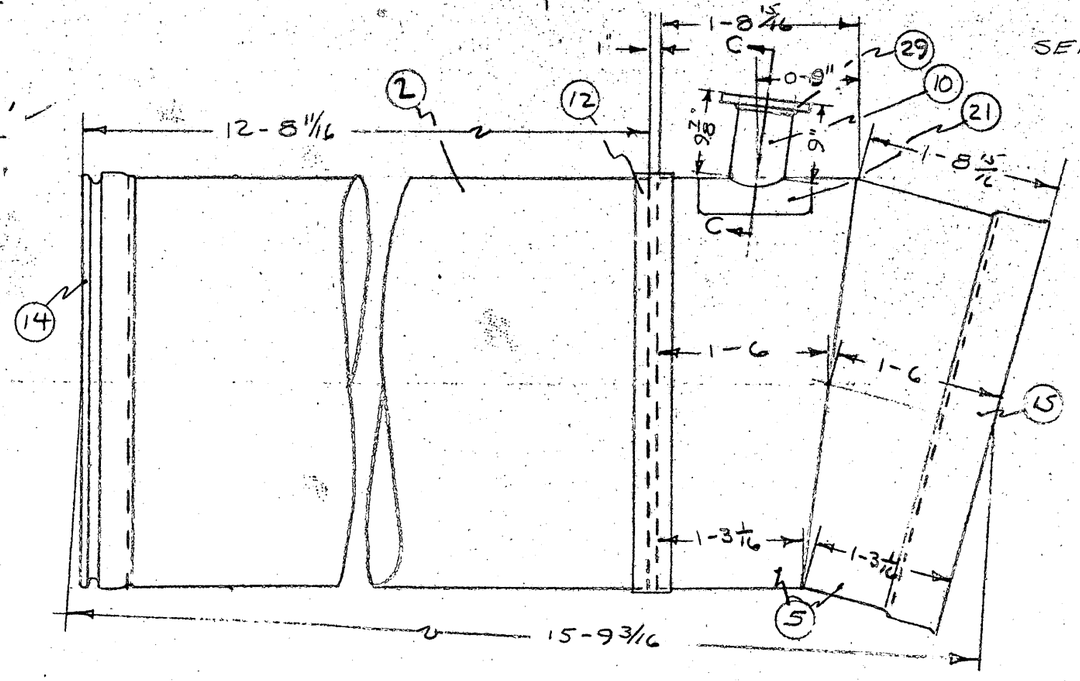

PC. 49
CL. 350
Δ = 15°-13'
CUT ∠ 7°-36'

P-4301

50-1-102.95(B)

MARK	BY	DATE	REVISION

F.O. 6348
DR. BY: HAW
CHECKED:
DATE: 4-7-58

RUSSIAN RIVER - DIV. "A"
42" FTTGS.

AMERICAN PIPE & CONSTRUCTION CO.
NORTHERN CALIFORNIA DIVISION - HAYWARD, CALIF.

DWG. NO. D2-0814

SHEET 29 OF SHEETS

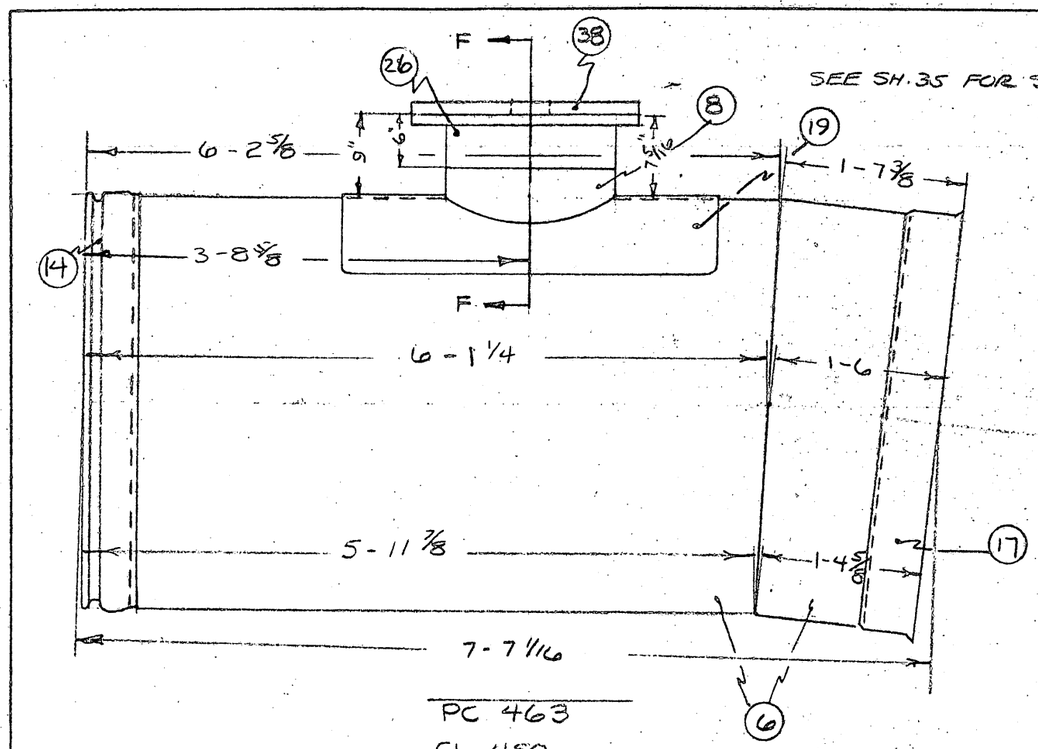

PC 463
CL. 450
Δ = 7°-05'
CUT∡ = 3°-32'

P-4799

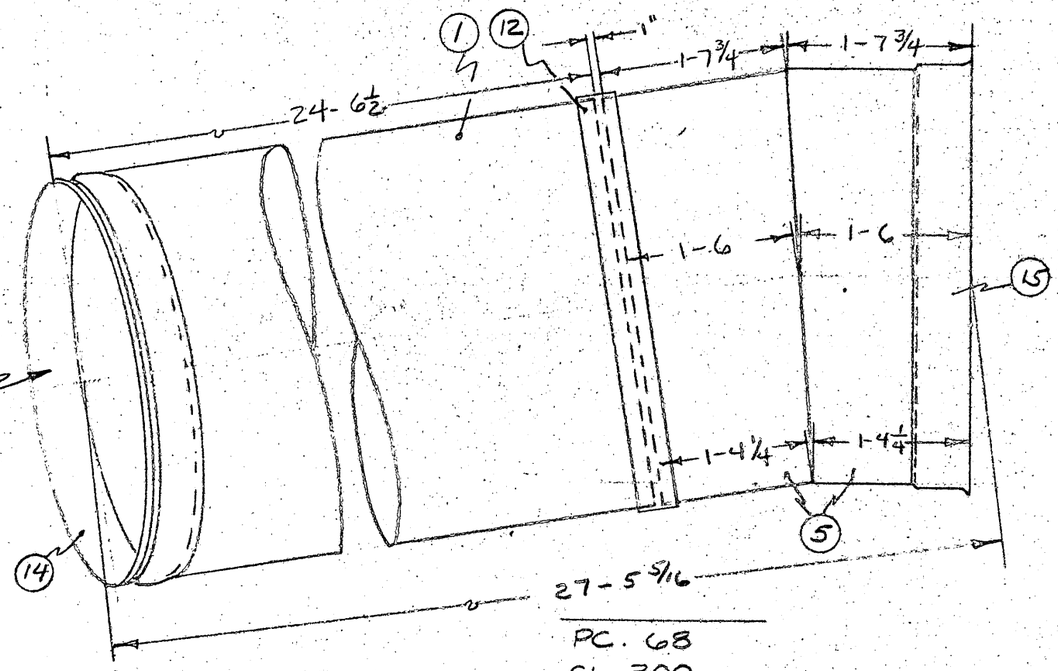

BEVEL
SPIGOT
1°-45'
AS SHOWN

PC. 68
CL. 300
Δ = 9°-15'
CUT∡ 4°-38'

P-4800

50-4-102.96AB

MARK	BY	DATE	REVISION

F.O. 6343
DR. BY: HAW
CHECK:
DATE: 4-7-3

RUSSIAN RIVER - DIV. "A"
42" FTTGS

AMERICAN PIPE & CONSTRUCTION CO.
NORTHERN CALIFORNIA DIVISION - HAYWARD, CALIF.

DWG. NO. D2-0814 | SHEET 30 OF SHEETS

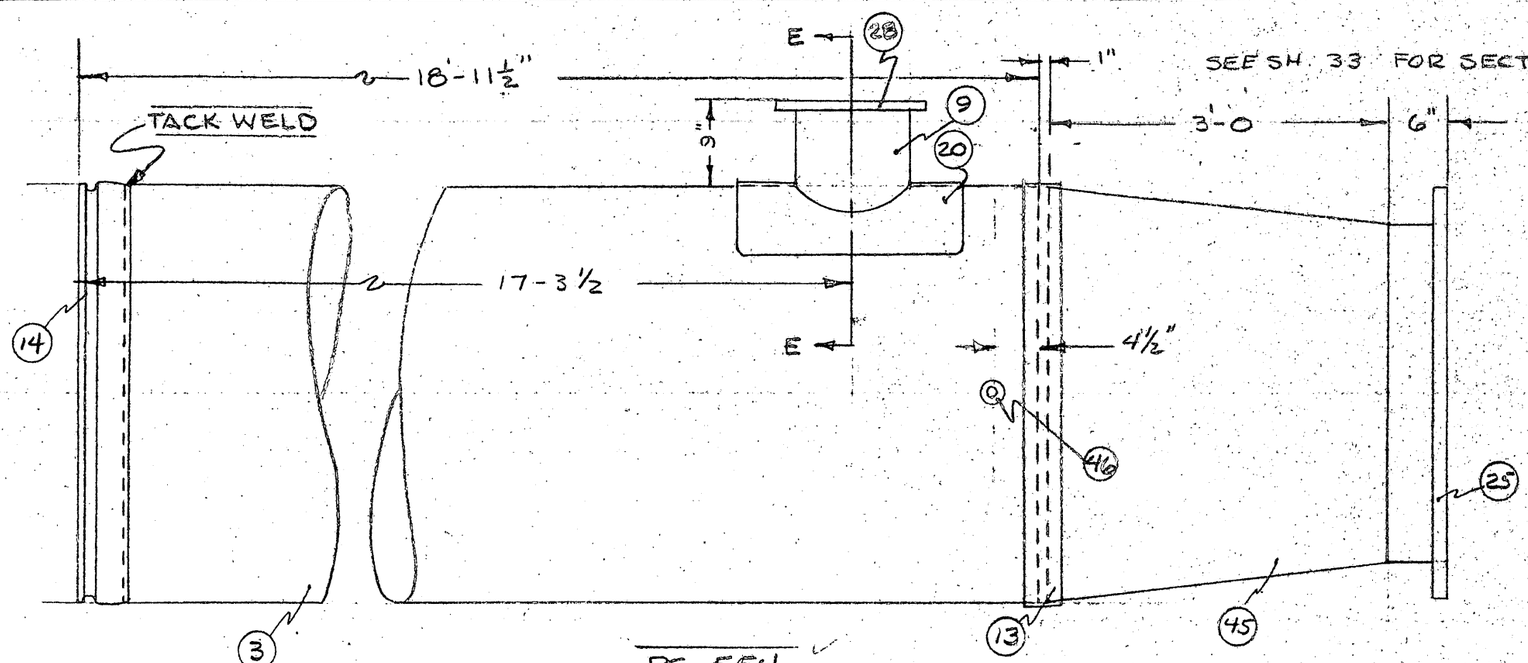

PC. 554
CL. 400 P-4808

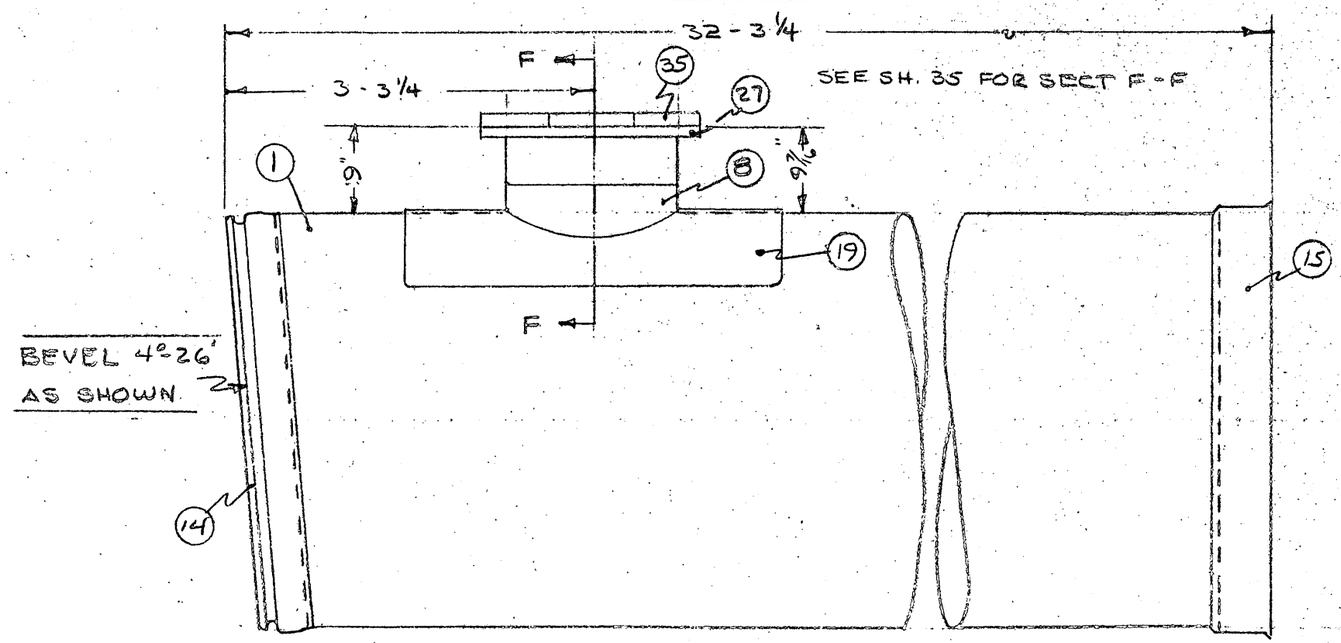

PC. 188
CL. 300 P-4803

50-4-102, 97AB

MARK	BY	DATE	REVISION	F.O. 6348 DR. BY: HAW CHECKED: DATE: 4-7-58	RUSSIAN RIVER - DIV. "A" 42" FTTGS.	AMERICAN PIPE & CONSTRUCTION CO. NORTHERN CALIFORNIA DIVISION-HAYWARD, CALIF. DWG. NO. D2-0814	SHEET 31 OF SHEETS

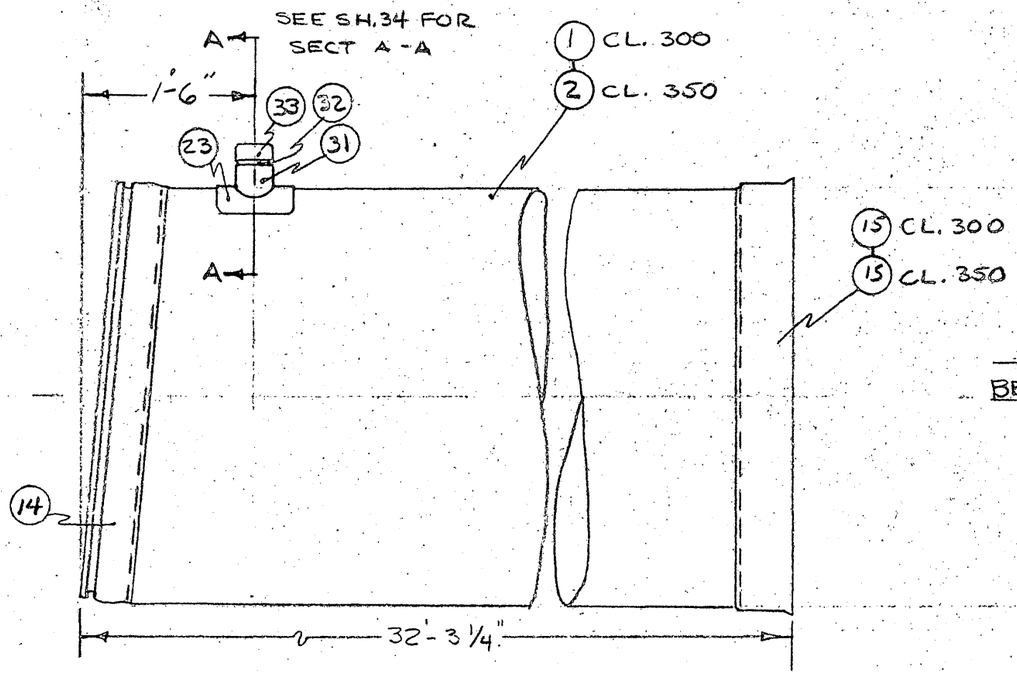

PC	CLASS	BEVEL
84	300	2°-13'
205	350	3°-23'

P. 4804

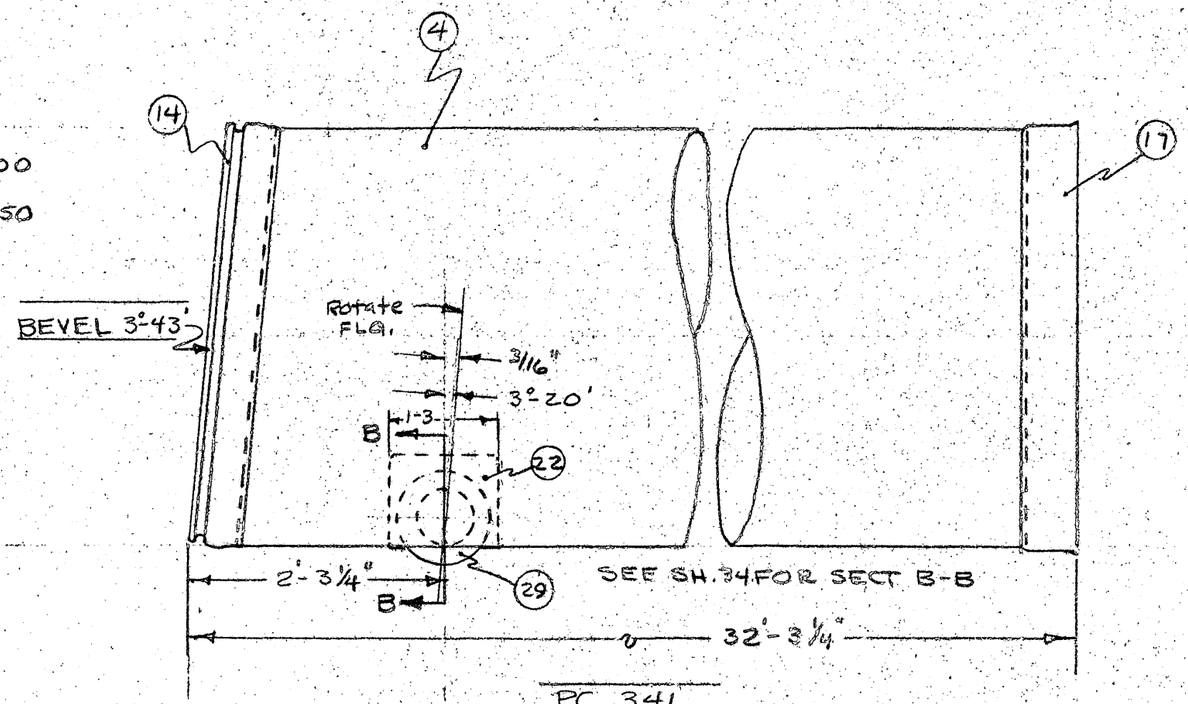

PC. 341
CLASS 450
P-4806

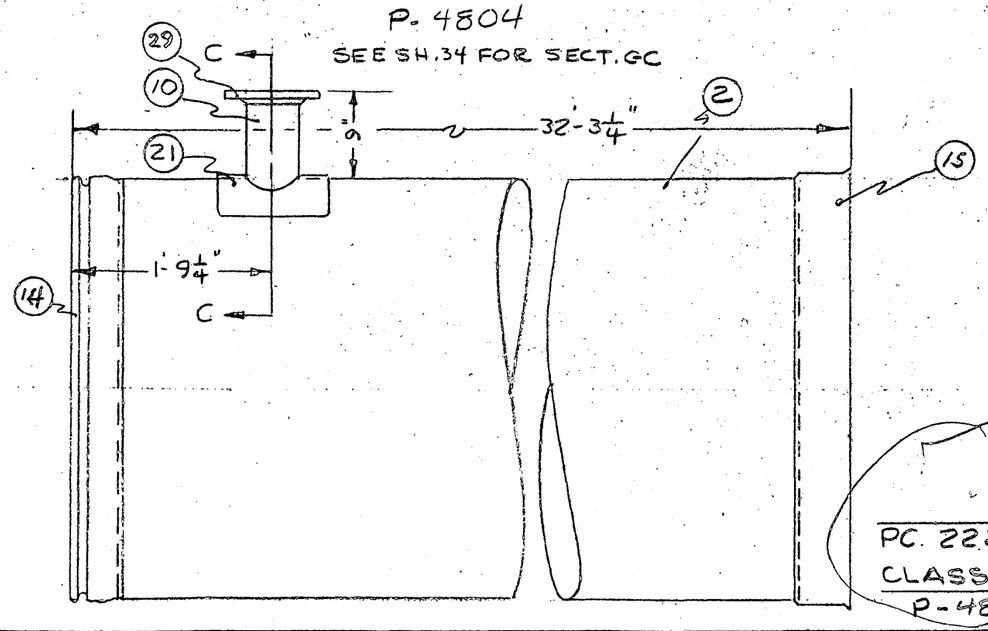

SEE SH. 34 FOR SECT. GC

PC. 222
CLASS 350
P-4805

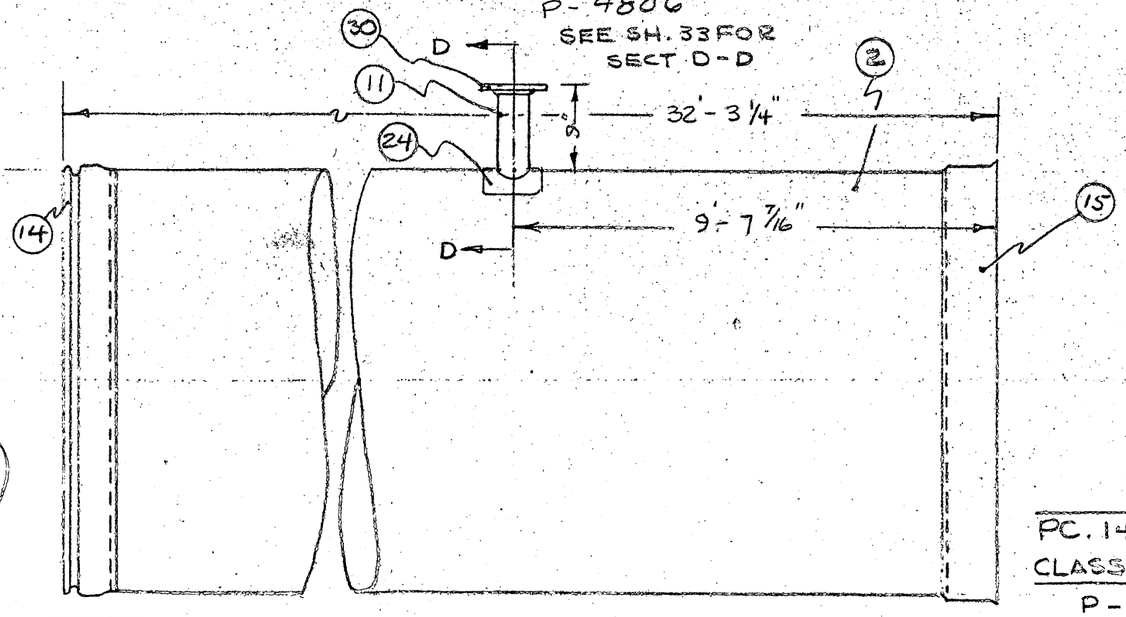

SEE SH. 33 FOR SECT D-D

PC. 141
CLASS 350
P-4807

MARK	BY	DATE	REVISION

F.O. 6348
DR. BY: HAW
CHECKED:
DATE: 4-4-58

RUSSIAN RIVER - DIV. "A"
42" FTTGS

AMERICAN PIPE & CONSTRUCTION CO.
NORTHERN CALIFORNIA DIVISION - HAYWARD, CALIF.
DWG. NO. D2-0814
SHEET 32 OF SHEETS

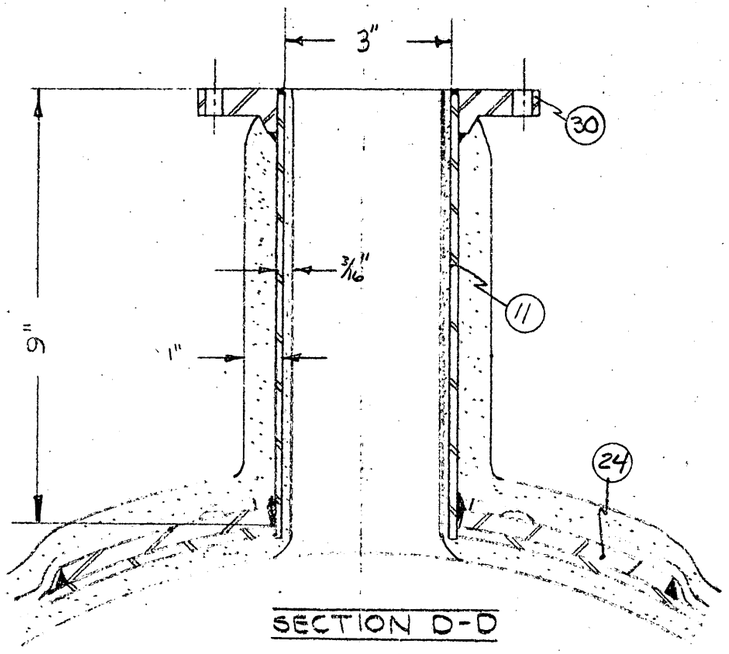

SECTION D-D

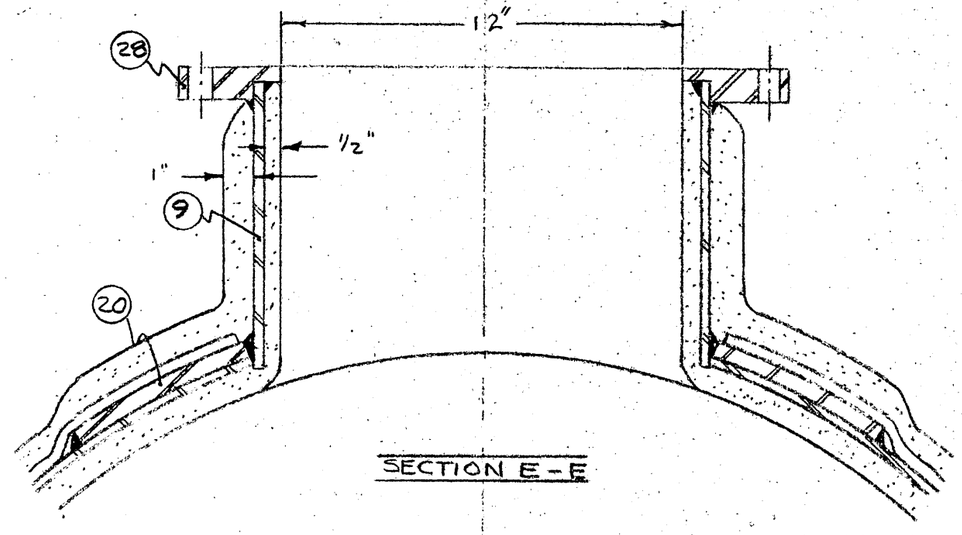

SECTION E-E

50-4-102.99AB

MARK	BY	DATE	REVISION	F.O. 6348	RUSSIAN RIVER - DIV. "A"	AMERICAN PIPE & CONSTRUCTION CO.
				DR BY: HAW	SECTION DETAILS	NORTHERN CALIFORNIA DIVISION - HAYWARD, CALIF.
				CHECKED: [illegible]		DWG. NO. D2-0814
				DATE: 4-8-38		SHEET 33 OF · SHEETS

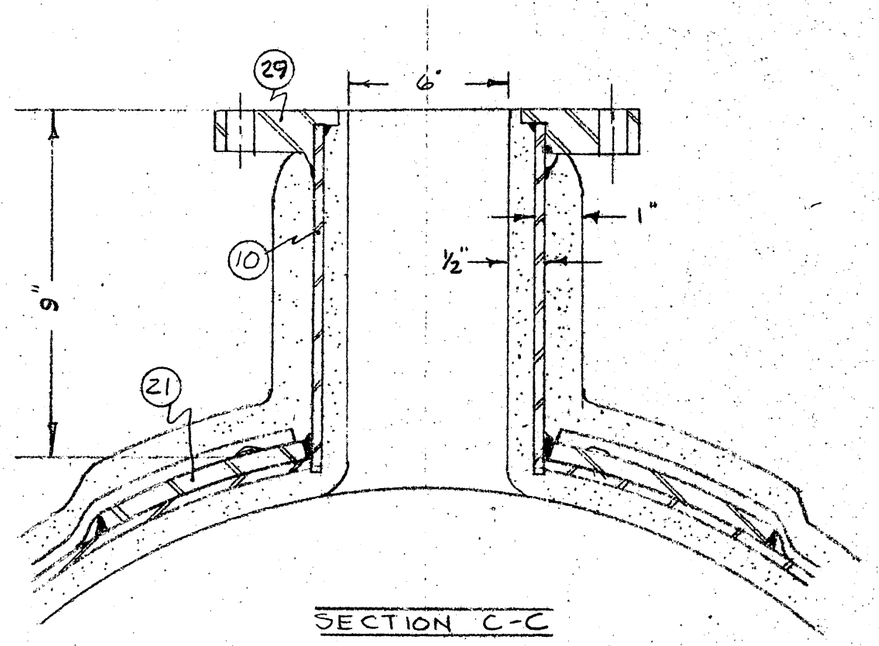

SECTION C-C

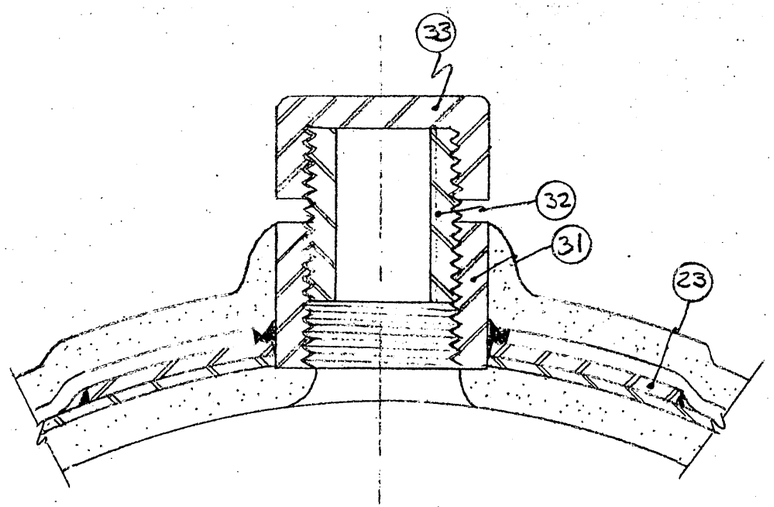

SECTION A-A

SEE SHT. 20

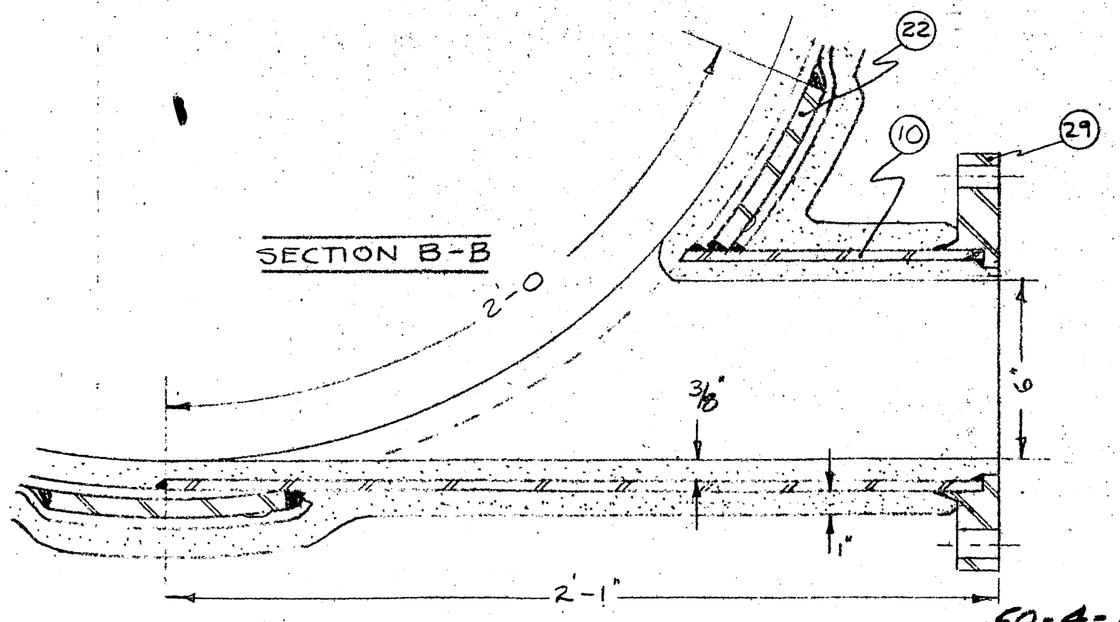

SECTION B-B

50-4-102.100AB

MARK	BY	DATE	REVISION

F.O. 6348
DR. BY: HAW
CHECKED:
DATE: 4-6-58

RUSSIAN RIVER DIV. "A"
SECTION DETAILS

AMERICAN PIPE & CONSTRUCTION CO.
NORTHERN CALIFORNIA DIVISION - HAYWARD, CALIF.

DWG. NO. 02-0814

SHEET 34 OF SHEETS

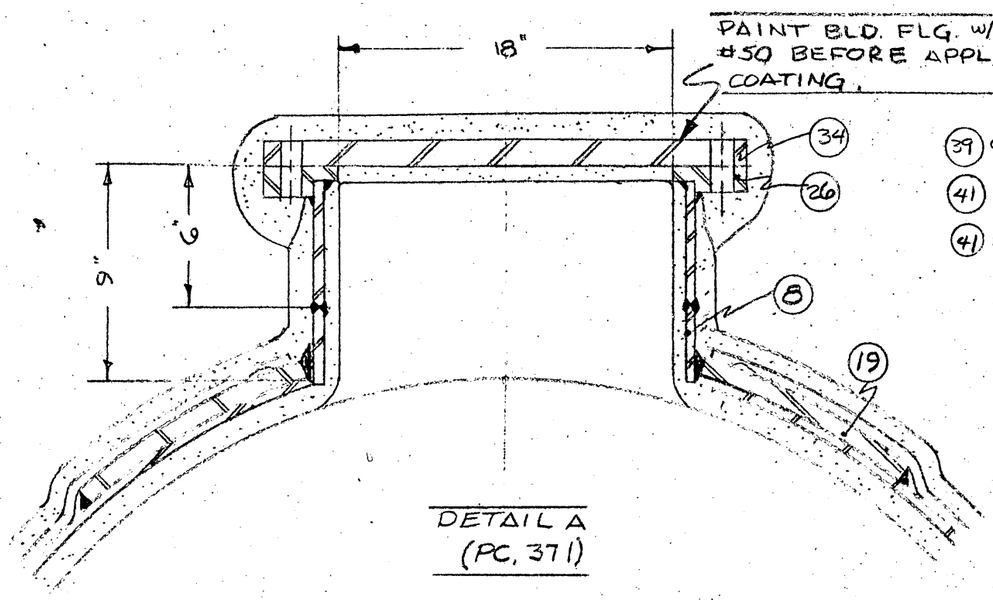

DETAIL A
(PC. 371)

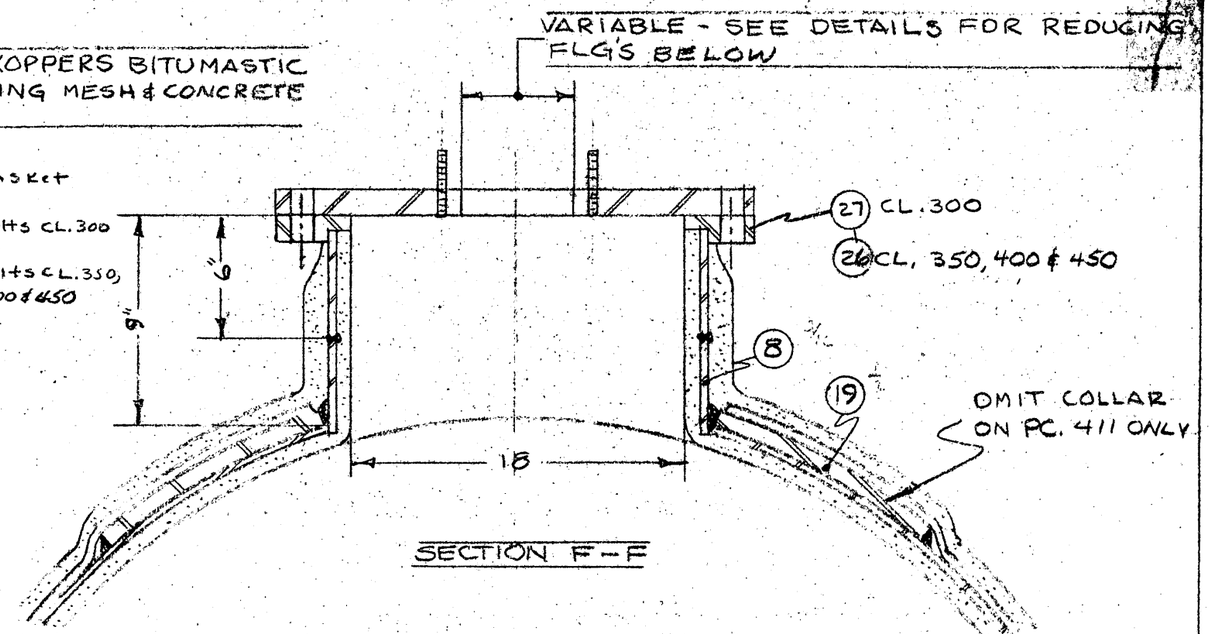

SECTION F-F

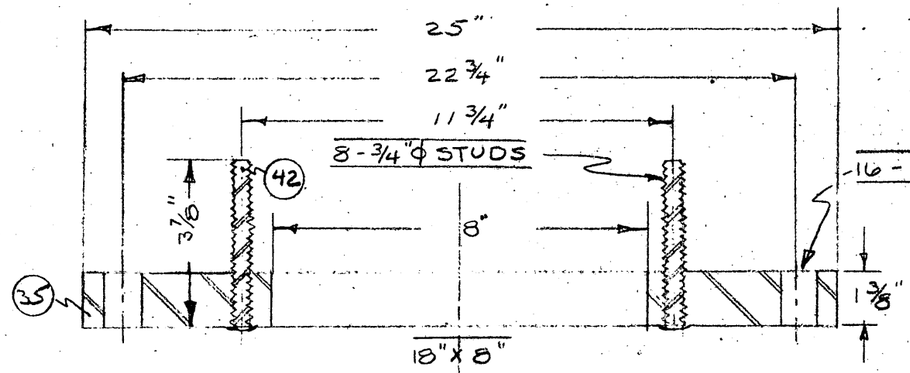

18"X 8"
CL. 300

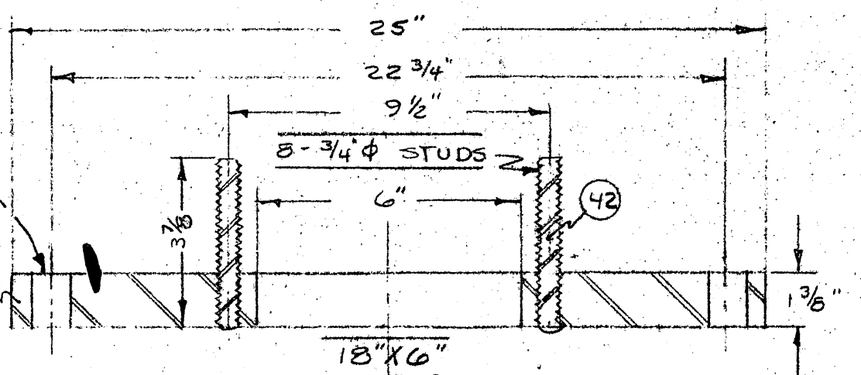

18"X 6"
CL. 300

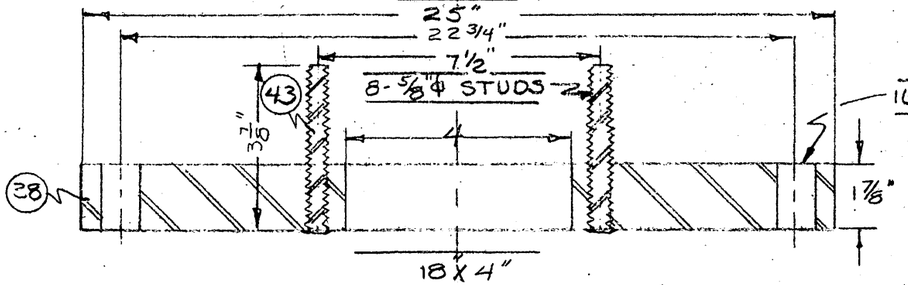

18"X 4"
CL. 400 & 450

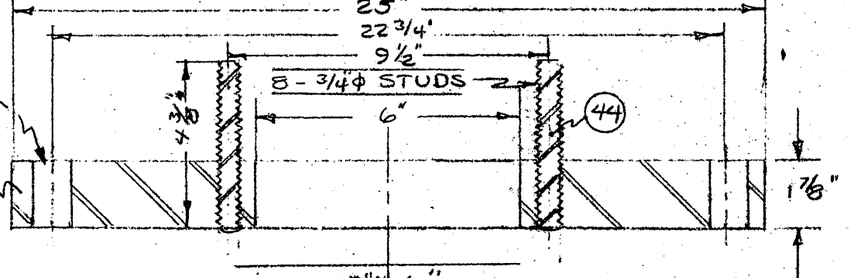

18"X 6"
CL. 350, 400 & 450

MACHINE ALL REDUCING FLGS FOR FULL FACE GASKETS

50-4-102.101 AB

MARK	BY	DATE	REVISION

F.O. 6348
DR BY: HAW
CHECKED:
DATE: 7-9-58

RUSSIAN RIVER - DIV. "A"
AIR VALVE & MAN HOLE DETAILS

AMERICAN PIPE & CONSTRUCTION CO.
NORTHERN CALIFORNIA DIVISION - HAYWARD, CALIF.
DWG. NO. D2 - 0814
SHEET 35 OF SHEETS

ITEM	NAME	REQ'D.	MATERIAL
33	CAP	12	4" STEEL CAP
32	NIPPLE	12	4" CLOSE NIPPLE
31	COUPLING	12	4" STD. COUPLING
30	"	1	3"-150# SLIPON
29	"	5	6"-150# SLIPON Reamed to 6.90" CYL
28	"	1	12" 150# SLIPON Reamed
27	"	5	18" 150# w/19 2 1/32 O.D. x 6" x 3/16 PL SKIRT
26	"	9	18"-SPC w/19 2 1/32 O.D. x 6" x 3/16 PL SKIRT
25	FLANGE	1	36"-SPC. w/37 3/8 O.D. x 6" x 5/16 PL SKIRT
24	"	1	7" x 7" x 1/2 PL
23	"	12	9" x 9" x 1/2" PL
22	"	3	15" x 24" x 1/2" PL
21	"	2	13" x 13" x 1/2" PL
20	"	1	26" x 26" x 1/2" PL
19	COLLAR	13	40" x 40" x 1/2" PL
18	RUBBER GASKET		42"- 2 1/32" ϕ A.C.C.P. RUBBER GASKET
17	"		42" SIZED BELL - 3/8" PL - A.C.C.P.
16	"		42" SIZED BELL - 9/16" PL - A.C.C.P.
15	BELL		42" SIZED BELL - 1/4" PL - A.C.C.P.
14	SPIGOT RING		42" SIZED A.C.C.P. SPIGOT RING
13	"	1.3	44 3/4 O.D. x 4" x 7/16" PL
12	BUTTSTRAP	11	44 5/8 O.D. x 4" x 3/8" PL
11	"	1'-0	3" SCHEDULE 40
10	"	8'-6"	6.90" O.D. x 10GA.
9	"	1'-0	13 3/8" O.D. x 10GA.
8	"	7'-0	19 2 5/32" O.D. x 3/16" PL
7	"	3'-8"	43 7/8 O.D. x 1/2 PL
6	"	123'	43 7/8" O.D. x 5/16" PL
5	"	89'	43 7/8" O.D. x 1/4" PL
4	"		CL 450 - 43 7/8 O.D. x 3/16" PL
3	"		CL. 400 - 43 7/8 O.D. x 3/16" PL
2	"		CL. 350 - 43 7/8" O.D. x 3/16" PL
1	CYLINDER		CL. 300 - 43 7/8 O.D. x 10GA

P-4816
P-4815

P-4817 FOR TESTING FTTGS.

ITEM	NAME	REQ'D.	MATERIAL
46	COUPLING	1	2" STD. COUPLING
45	TAPER	1	43 7/8 O.D. x 37 7/8" O.D. x 3-0 x 5/16 PL
44	"	32	3/4ϕ x 4 3/8" Spec B-7 STUDS
43	"	32	5/8ϕ x 3 7/8" Spec B-7 STUDS
42	STUDS	40	3/4ϕ x 3 7/8" Spec B-7 STUDS
41	" "	144	1 1/8 x 5 1/2" " " " "
40	BOLT w/NUT	80	1 1/8" x 4 1/2", 7NC2 Spec B7 HEX. HD W/ HEA NUT
39	FLANGE GASKET	14	18" CRANITE 1/16" TH. FULL FACE
38	" "	4	18" x 4" SPC.
37	" "	4	18" x 6" SPC.
36	" "	3	18" x 6" x 150#
35	REDUCING FLANGE	2	18" x 8" x 150#
34	BLIND FLANGE	1	18"-SPC BLD. FLANGE

50-4-102.102 AB

MARK	BY	DATE	REVISION

F.O. 6348
DR. BY: HAW
CHECKED:
DATE 4-9-58

MATERIAL LIST
RUSSIAN RIVER - DIV. "A"

AMERICAN PIPE & CONSTRUCTION CO.
NORTHERN CALIFORNIA DIVISION — HAYWARD, CALIF.

DWG. NO. D2 - 0814

SHEET 36 OF SHEETS

FLANGE SCHEDULE

PLATE & SLIP ON FLANGES

I.D. OF OPENING "A"	NO. OF FLANGES REQUIRED	O.D. OF CYLINDER "B"	THICKNESS OF CYL. "C"	LENGTH OF NIPPLE "D"	O.D. OF FLANGE "E"	B.C. OF FLANGE "F"	THICKNESS OF FLANGE "G"	NO. OF BOLTS REQUIRED	DIAMETER OF BOLTS	DIAMETER OF BOLT HOLES	MARK
36"	1	37 7/8"	5/16"	3 3/8	46	42 3/4"	3 1/8"	32	1 1/2"	1 5/8"	(25)
18"	5	19 23/32	3/16"	5 1/8"	25"	22 3/4"	1 3/8	16	1 1/8"	1 1/4	(27)
18"	9	"	"	4 5/8	"	"	1 7/8	"	"	"	(26)
12"	1	13 3/8"	10GA.	—	19"	17"	1 1/4"	12	7/8"	1"	(28)
6"	5	6 90/100"	"	—	11"	9 1/2"	1"	8	3/4"	7/8"	(29)
3"	1	3 3/8"	3/16	—	7 1/2"	6"	15/16"	4	5/8"	3/4"	(30)

BLIND AND/OR REDUCING FLANGES

SIZE	NO. OF FLANGES REQUIRED	O.D. OF FLANGE "E"	THICKNESS OF FLANGE "G"	NO. & DIA. OF BOLT HOLES	B.C. OF FLANGE "F"	MARK	SEE DETAIL NO.
18	1	25"	1 7/8	12 - 1 1/8	22 3/8	(34)	

MANUFACTURING TOLERANCES: INSIDE DIAMETER OF FLANGE — — +1/16 - 0 THICKNESS OF FLANGE — — +1/8 - 0
OUTSIDE DIAMETER OF FLANGE — ±1/8 BOLT CIRCLE — — — — — — ± 1/16

ALL FLANGES ARE TO BE SPOT FACED @ BOLT HOLES

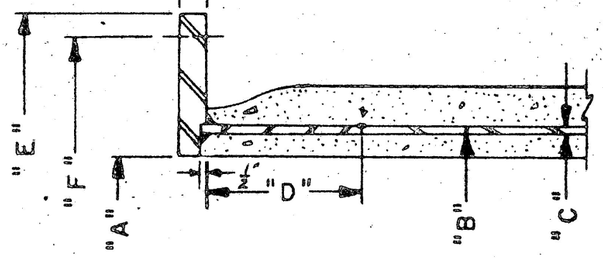

16" I.D. & LARGER

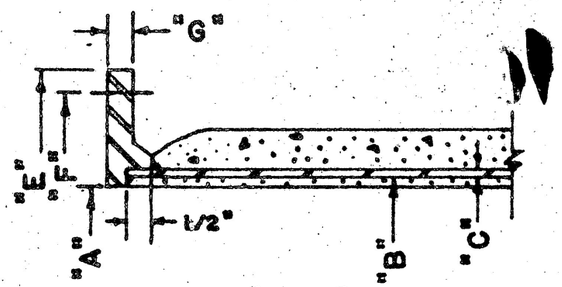

12" & 14" I.D.

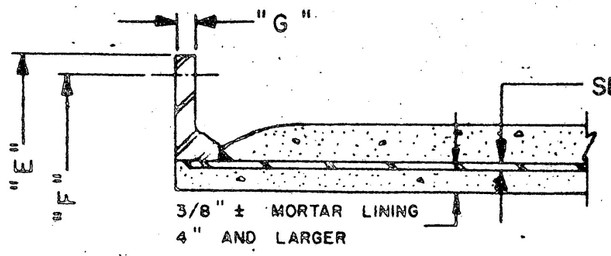

10" I.D. & SMALLER

ADDITIONAL MATERIAL REQUIRED

QUANTITY	SIZE	DESCRIPTION
		50-4-102.103 AB

50-4-102.103AB

MARK	BY	DATE	REVISION

F.O. 6348
DR. BY: HAW
CHECKED:
DATE: 4-9-58

FLANGE SCHEDULE
RUSSIAN RIVER - DIV. - A"

AMERICAN PIPE & CONSTRUCTION CO.
NORTHERN CALIFORNIA DIVISION — HAYWARD, CALIF.
DWG. NO. D2-0814 SHEET 37 OF SHEETS

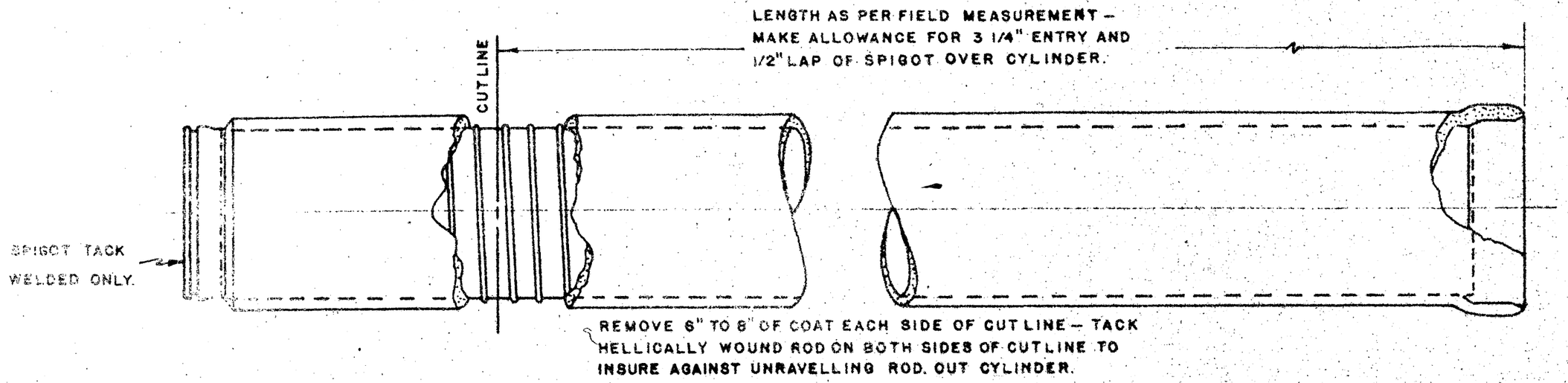

STEP ONE

PC NO.	STATION	CLASS

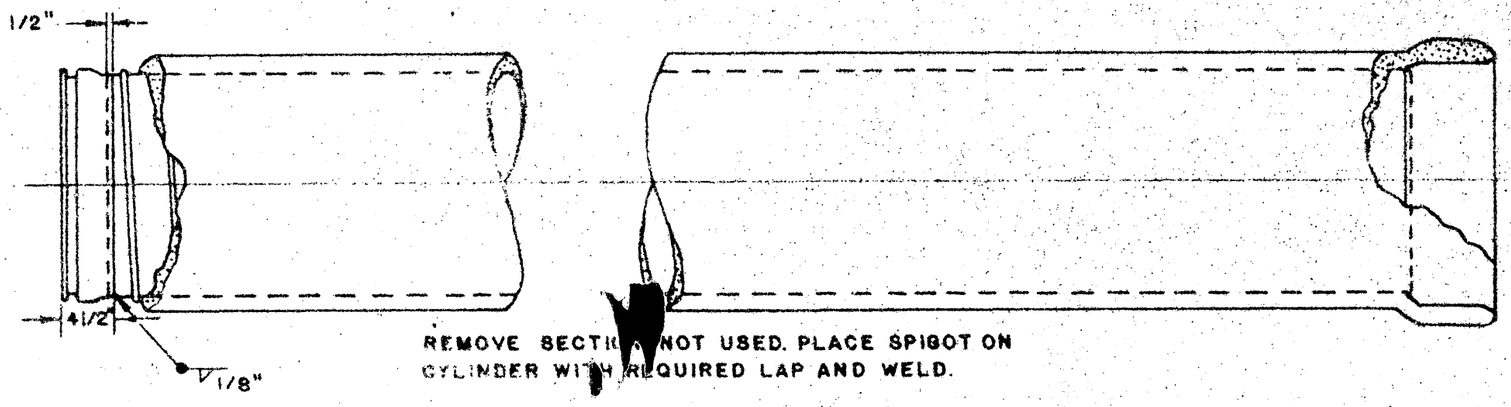

STEP TWO

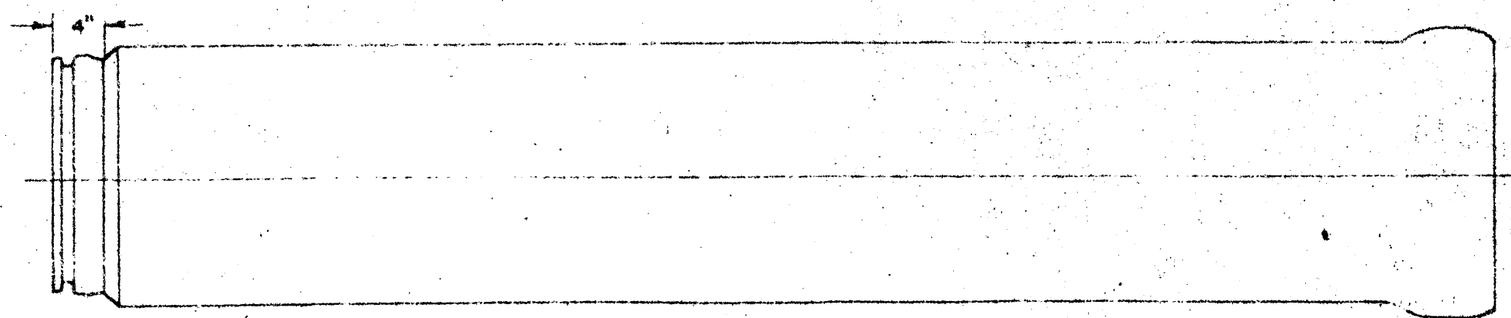

PLACE CEMENT MORTAR INSIDE AND OUT AS PER STANDARD A.C.C.P.

STEP THREE

50-4-102.104AB

F.C. 6348 DR. BY HAW CHECKED DATE 4-9-58	FIELD CUT PROCEDURE FOR A.C.C.P.	AMERICAN PIPE & CONSTRUCTION CO. NORTHERN CALIFORNIA DIVISION HAYWARD, CALIF. DWG NO D2-0814 SHEET 38 OF SHEETS

REVISION

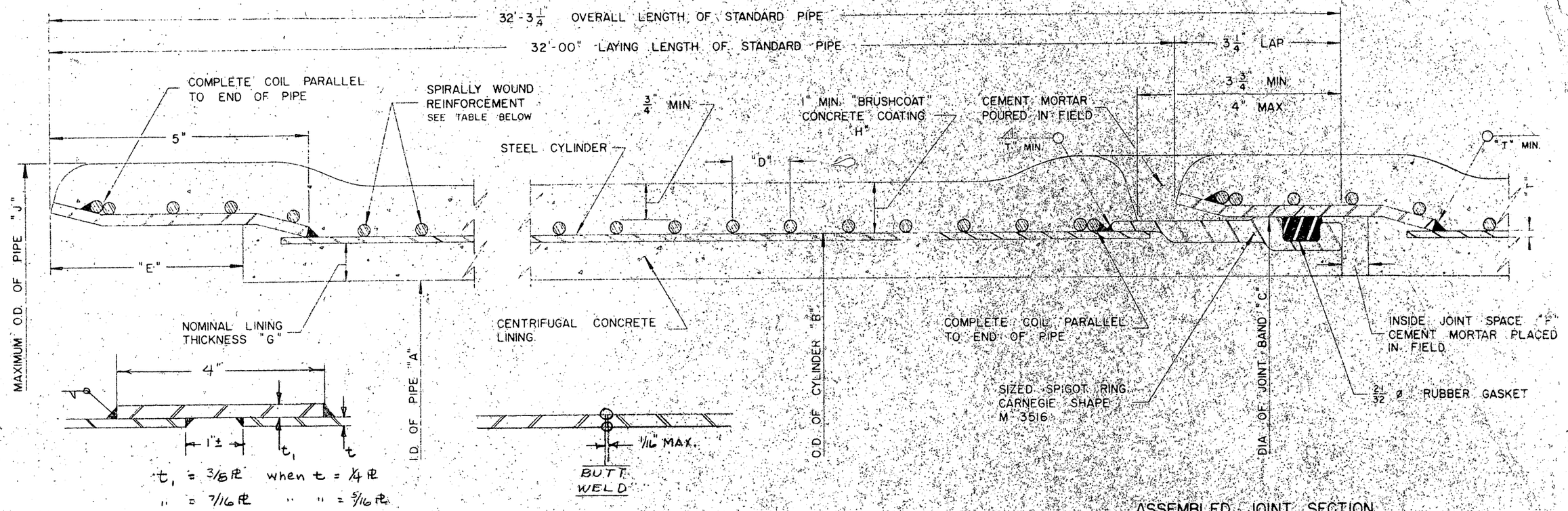

AMERICAN CONCRETE CYLINDER PIPE

ALLOWABLE DESIGN STRESS = 13,500 PSI.

MANUFACTURING DATA

ID OF PIPE "A"	~~DESIGN PRESSURE OR~~ CLASS ~~PSI~~	TOTAL A_s PER LINEAR FOOT SQ. IN	STEEL CYLINDER: O.D. OF CYLINDER "B"	GAGE OR THICKNESS "T"	COIL OR SHEET WIDTH	A_s PER LINEAR FOOT SQ IN	PLANT CYL TEST PRESSURE f_s = 22,000	SPIRALLY WOUND REINFORCEMENT: ROD DIA	SPACING C TO C "D"	COILS PER LINEAR FOOT	A_s PER LINEAR FOOT SQ IN
42"	300	2.53	43 7/8"	10 Ga.	48"	1.61	136	5/16"	1.00	12.00	9.21
42"	350	2.96	43 7/8"	3/16"	48"	2.25	190	5/16"	1.30	9.23	7.10
42"	400	3.37	43 7/8"	3/16"	48"	2.25	190	3/8"	1.18	10.17	1.12
42"	450	3.74	43 7/8"	3/16"	48"	2.25	190	7/16"	1.21	9.91	1.49

JOINT RING DIAMETER "C"	BELL RING THICKNESS	DEPTH OF SOCKET "E"	NOMINAL LINING THICKNESS "G"	COATING THICKNESS "H"
44 3/8"	1/4"	3 3/4"	3/4"	1"
44 3/8"	1/4"	3 3/4"	3/4"	1"
44 3/8"	5/16"	3 3/4"	3/4"	1"
44 3/8"	3/8"	3 3/4"	3/4"	1"

INSTALLATION DATA

MAXIMUM O.D. OF PIPE "J"	INSIDE JOINT SPACE "F"	MAXIMUM ANGLE OF DEFLECTION AT A STANDARD JOINT: MAXIMUM ANGLE	OFFSET IN 32 FEET	MINIMUM RADIUS WITH 32' PIPE	APPROXIMATE WEIGHT OF 32' PIPE
46 7/8"	1/2"	1°-17'	8 5/8"	1422'	12,448
46 7/8"	1/2"	1°-17'	8 5/8"	1422'	12,960
47"	1/2"	1°-17'	8 5/8"	1422'	13,600
47 1/8"	1/2"	1°-17'	8 5/8"	1422'	14,304

50-4-102.105 R

F.O. 6348
DR. BY HAW
CHECKED
DATE 4-9-58

PIPE DESIGN
RUSSIAN RIVER - DIV. A

AMERICAN PIPE & CONSTRUCTION CO.
NORTHERN CALIFORNIA DIVISION - HAYWARD, CALIF.

DWG. NO. D2-0814 SHEET 39 OF

MARK BY DATE REVISION

GENERAL NOTES

LAYOUT

1. STATIONS & ELEVATIONS ARE TO ℄ INVERT FACE OF BELL.
2. ANCHOR BLOCKS ARE TO BE PLACED AT ELBOWS, VALVES, ETC., AS REQ'D BY THE DISTRICT.
3. MAX. PULL IS 1°-19'.

FITTINGS

1. TYPE II CEMENT TO BE USED IN THE LINING & COATING.
2. ALL EXPOSED STEEL WITH THE EXCECPTION OF FLANGE FACES, SHALL BE COATED WITH AMERCOAT PRIMER #86.
3. ALL PIPE SECTIONS, WITH THE EXCEPTION OF STDS WHICH WILL BE NUMBERED BY THE CONTR IN THE FIELD, SHALL HAVE MARKED ON THE INSIDE OF THE BELL END, THE HEAD, PIPE NUMBER, AND THE DATE WHICH THE COATING WAS APPLIED.
4. ALL PIPE HAVING BEVELED ENDS SHALL BE MARKED WITH THE AMOUNT OF BEVEL AND THE SHORT SIDE OF THE BEVEL SHALL BE PERMANENTLY MARKED ON THE OUTSIDE OF THE SPIGOT.

MARK	BY	DATE	REVISION

F.O. 6348
DR. BY: HAW
CHECKED:
DATE 1-9-58

RUSSIAN RIVER - DIV. A
GENERAL NOTES

50-4-102.106 RR

AMERICAN PIPE & CONSTRUCTION CO.
NORTHERN CALIFORNIA DIVISION - HAYWARD CA.