CONTRACT NO.
0-80-7 #1A

PROJECT MANUAL

FOR

404 Aviation Boulevard Roof Replacement

SONOMA
COUNTY
WATER
AGENCY

MARCH, 2015

For document accessibility questions, please contact Sonoma County Water Agency at (707)-547-1900

DOCUMENT 00001

PROJECT MANUAL

for

404 AVIATION BOULEVARD ROOF REPLACEMENT

SONOMA COUNTY WATER AGENCY

BOARD OF DIRECTORS

David Rabbitt
Shirlee Zane
James Gore
Efren Carrillo
Susan Gorin, Chair

Advertisement Date: March 2015

Bid Date: Tuesday, April 14, 2015

Contract Number: 0-80-7 #1A

© 2015 Sonoma County Water Agency

DOCUMENT 00007

SEALS PAGE

Sonoma County Water Agency

Kent A. Gylfe, P. E. Date: 3/3/15

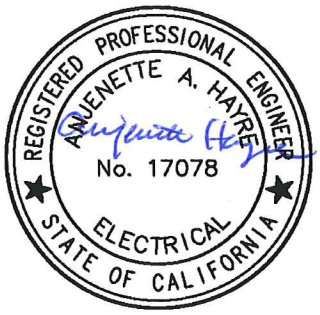

Anjenette A. Hayre, P. E. Date: 3/4/15

rv

END OF DOCUMENT

DOCUMENT 00010

TABLE OF CONTENTS

STANDARD EDITION

INTRODUCTORY INFORMATION

Document	Title
00001	Title Page
00007	Seals Page
00010	Table of Contents

BIDDING REQUIREMENTS

Document	Title
00100	Advertisement for Bids
00200	Instructions to Bidders
00202	Pre-Bid Site Visit Vicinity Map
00203	Bid Submittal Vicinity Map
00210	Indemnity and Release Agreement
00320	Geotechnical Data and Existing Conditions
00400	Bid Form
00411	Bond Accompanying Bid
00420	Bidder Registration Form
00430	Subcontractors List
00450	Statement of Qualifications for Construction Work
00481	Noncollusion Declaration

CONTRACTING REQUIREMENTS

Document	Title
00505	Notice of Intent to Award for Construction
00510	Notice of Award
00520	Agreement
00550	Notice to Proceed
00611	Construction Performance Bond
00612	Construction Labor and Material Payment Bond
00630	Guaranty
00650	Agreement and Release of Any and All Claims
00660	Substitution Request Form
00670	Escrow Bid Documents
00680	Escrow Agreement for Security Deposits in Lieu of Retention

CONDITIONS OF THE CONTRACT

Document	Title
00700	General Conditions
	1. General
	2. Bidding
	3. Contract Award and Commencement of the Work
	4. Bonds and Insurance
	5. Drawings and Specifications
	6. Construction By Owner or by Separate Contractors
	7. Owner and Payment
	8. Control of the Work
	9. Warranty, Guaranty, and Inspection of Work
	10. Contractor's Organization and Equipment
	11. Prosecution and Progress of the Work
	12. Claims by Contractor
	13. Legal and Miscellaneous
	14. Modifications of Contract Documents
	15. Time Allowances
	16. Working Conditions and Prevailing Wages
00800	Supplementary Conditions
00910	Addenda

SPECIFICATIONS

Division 1 - General Requirements

Section	Title
01100	Summary
	– Summary
	– Submittals
	– Work Covered by Contract Documents
	– Bid Items, Allowances, and Alternates
	– Work Under Other Contracts
	– Future Work
	– Work Sequence
	– Work Days and Hours
	– Cooperation of Contractor and Coordination with Other Work
	– Partial Occupancy/Utilization Requirements
	– Contractor Use of Site
	– Air Quality Standards
	– Protection of Existing Structures and Underground Facilities
	– Permits
	– Rights-of-Way
	– Document Tracking
	– Products Ordered in Advance
	– Owner-Furnished Products
01200	Price and Payment Procedures

Section	Title
01250	Modification Procedures
01315	Project Meetings
01320	Progress Schedules and Reports
01330	Submittal Procedures
01410	Regulatory Requirements
01420	References and Definitions
01450	Quality Control
01500	Temporary Facilities and Controls
01540	Site Security and Safety
01600	Product Requirements
01735	Selective Demolition, Cutting, and Patching
01740	Cleaning
01741	Construction Material Waste Management Plan
01770	Contract Closeout
01780	Project Record Documents

Division 2 - Site Construction (Not Used)

Division 3 - Concrete (Not Used)

Division 4 - Masonry (Not Used)

Division 5 – Metals (Not Used)

Division 6 – Wood and Plastics (Not Used)

Division 7 – Thermal and Moisture Protection

Section	Title
07540	Thermoplastic Membrane Roofing
07600	Flashing and Sheetmetal

Division 8 – Doors and Windows

Section	Title
08625	Light Tubes

Division 9 - Finishes (Not Used)

Division 10 – Specialties (Not Used)

Division 11 – Equipment (Not Used)

Division 12 – Furnishings (Not Used)

Division 13 – Special Construction

Section	Title
13650	Photovoltaic Collectors

Division 14 – Conveying Systems (Not Used)

Division 15 – Mechanical (Not Used)

Division 16 – Electrical (Not Used)

DRAWINGS

(See Drawing List on Drawing No. G-1)

END OF DOCUMENT

BIDDING REQUIREMENTS

DOCUMENT 00100

ADVERTISEMENT FOR BIDS

1. **NOTICE.** The Sonoma County Water Agency ("Owner"), a public agency of the State of California, hereby gives notice that it will accept Bids for construction of the following public work:

Contract Number 0-80-7 #1A
404 Aviation Boulevard Roof Replacement

2. **DESCRIPTION AND LOCATION OF THE WORK**. The Work consists of roof replacement of a 63,000 square foot, actively occupied office building, located at 404 Aviation Boulevard, Santa Rosa, in an unincorporated area of Sonoma County, California. The Work includes, but is not limited to, the removal and replacement of existing roof, removal and storage of existing photovoltaic panels, and reinstallation of photovoltaic panels in working condition after roof replacement is completed. Bidding Documents contain the full description of the Work.

3. **ESTIMATED PROJECT COST RANGE:** $900,000 to $1,200,000.

4. **REQUIRED CONTRACTOR'S LICENSE(S).** A California "C-39" or "A" contractor's licenses are required to Bid this Contract. Joint ventures must secure a joint venture license prior to award of this Contract.

5. **CONTACT INFORMATION.**

Mailing address:
Sonoma County Water Agency
404 Aviation Boulevard
Santa Rosa, CA 95403-9019

Phone: 707-547-1900
Fax: 707-544-6123
Email: BidderQuestions@scwa.ca.gov

Office:
Sonoma County Water Agency
404 Aviation Boulevard
Santa Rosa, CA 95403-9019

Website address:
www.sonomacountywater.org

6. **PROCUREMENT OF BIDDING DOCUMENTS.** Bidders may examine Bidding Documents at Owner's Office. Bidders may obtain hard copies of Bidding Documents upon registration as a Planholder through Owner's office and payment of a non-refundable fee of $20 for each copy. Owner will accept cash or checks payable to "Sonoma County Water Agency." Bidding Documents need not be returned to Owner. Bidding Documents contain a reduced set of Drawings. Bidders may arrange to obtain full-size Drawings from Draftech Blueprinting, Inc., 1544 Terrace Way, Santa Rosa, CA 95405, 707-578-9442 for an additional charge to be paid directly to Draftech Blueprinting, Inc. Electronic Bidding Documents are available on Owner's website.

7. MANDATORY PRE-BID SITE VISIT. Owner will conduct Pre-Bid Site Visits at 10:00 a.m. on Tuesday, March 24, 2015, and at 2:00 p.m. on Thursday, March 26, 2015, at the Site.

A map showing the meeting place for the Pre-Bid Site Visits is included in Document 00202 (Pre-Bid Site Visit Vicinity Map) and available on Owner's website. Bidders must attend one of the Pre-Bid Site Visits and sign an attendance roster as a condition to bidding.

Bidders will be provided the opportunity to observe site conditions, investigate conditions, or otherwise conduct invasive investigations, explorations, tests, or studies, with Owner's prior consent, at the Pre-Bid Site Visit. **All Contractors, Subcontractors, Suppliers, or Manufacturer's ("Bidders") attending the Pre-Bid Site Visit that want to view the roof will be required to provide an executed Document 00210 (Indemnity and Release Agreement) and an insurance certificate as described therein by noon of the Day prior to the Pre-Bid Site Visit**. This will be the Bidder's only opportunity to investigate conditions at the Site, and will require climbing of a ladder to reach the Site.

The Pre-Bid Site Visit is merely a showing of the Site and existing conditions and will not provide an opportunity for Bidders to have questions answered. Bidders are encouraged, however, to submit written questions. Owner will transmit to all Registered Planholders (all parties recorded as having received Bidding Documents) such Addenda as Owner in its discretion considers necessary in response to written questions. Bidding Documents will not be available at the Pre-Bid Site Visit.

Bidders shall not rely on oral statements. Oral statements will not be binding or legally effective.

Other Pre-Bid Site Visits may be scheduled at Owner's sole discretion, depending on staff availability.

8. RESTRICTIONS ON SUBSTITUTIONS. As a limitation on Bidder's privilege to substitute "or equal" items, Owner has found that certain items are designated as Owner standards and certain items are designated to match existing items in use on a particular public improvement either completed or in the course of completion or are available from one source. As to such items, Owner will not permit substitution. Such items are: None.

9. INSTRUCTIONS. Bidders shall refer to Document 00200 (Instructions to Bidders) for required documents and items to be submitted in sealed envelopes for deposit into the Bid boxes, located at Owner's Office, and applicable times for submission.

10. STATEMENTS OF QUALIFICATIONS. Each Bidder shall be required to submit, in accordance with Document 00200 (Instructions to Bidders) and Document 00450 (Statement of Qualifications for Construction Work), a Statement of Qualifications.

11. BID SUBMISSION. Sealed Bids will be received at Owner's Office (see paragraph 5) until 2:00 p.m., Tuesday, April 14, 2015. Owner's staff will determine official time and will call out the designated time in the Bid reception area of Owner's Office, stating that the period for accepting Bids is closed. The Bid opening will be in accordance with procedures set forth in Document 00200 (Instructions to Bidders).

12. BID PREPARATION COST. Bidders are solely responsible for the cost of preparing their Bids.

13. **CONTRACT TIME.** Work shall be completed within 120 Days from the date when Contract Time commences to run.

14. **PAYMENT BONDS.** In accordance with California Civil Code Section 9550, payment bonds as set forth in Document 00200 (Instructions to Bidders) will be required from the successful Bidder.

15. **REGISTRATION PURSUANT TO LABOR CODE SECTION 1725.5 REQUIRED**. As of March 1, 2015, all Contractors submitting a Bid for this Project, and any Subcontractors listed therein, must be currently registered and qualified to perform public work pursuant to Labor Code section 1725.5. Owner requires proof of current registration by Contractor and all listed Subcontractors as a condition to Bid on this Project, subject only to the allowances of Labor Code section 1771.1.

16. **PREVAILING WAGE LAWS.** This Project is subject to compliance monitoring and enforcement by the Department of Industrial Relations. The successful Bidder must comply with all prevailing wage laws applicable to the Project, and related requirements contained in the Contract Documents. Copies of the state's general prevailing rates of per diem wages for each craft, classification, or type of worker needed to execute the Contract, as determined by Director of the State of California Department of Industrial Relations, are on file at Owner's Office and are deemed included in the Bidding Documents. Upon request, Owner will make copies available to any interested party. Contractor shall post the applicable prevailing wage rates at the Site in addition to all other job site notices prescribed by regulations.

17. **SUBSTITUTION OF SECURITIES.** Owner will permit successful Bidder to substitute securities for retention monies withheld to ensure performance of Contract, as set forth in Document 00680 (Escrow Agreement for Security Deposits in Lieu of Retention), in accordance with California Public Contract Code, Section 22300. By this reference, Document 00680 (Escrow Agreement for Security Deposits in Lieu of Retention) is incorporated in full in this Document 00100.

18. **RESERVATION OF RIGHTS.** Owner specifically reserves the right, in its sole discretion, to reject any or all Bids, or re-bid, or to waive inconsequential deviations from Bid requirements not involving time, price, or quality of the Work.

By order of the Sonoma County Water Agency's General Manager.

END OF DOCUMENT

DOCUMENT 00200

INSTRUCTIONS TO BIDDERS

STANDARD EDITION

TABLE OF CONTENTS

1.	Definitions	1
2.	Contact Information	1
3.	Minimum Requirements to Bid	1
4.	Procurement of Bidding Documents	3
5.	Existing Drawings and Geotechnical Data	3
6.	Mandatory Pre-Bid Site Visits	3
7.	Substitutions	3
8.	Bidder Questions	4
9.	Addenda	4
10.	Wage Rates	5
11.	Other Requirements Prior to Bidding	5
12.	Preparation of Bids	5
13.	Required Bid Security	5
14.	Required Subcontractors List	5
15.	Required Statement of Qualifications	6
16.	Requirement for Separate Sealed Envelopes	6
17.	Contents of Envelope “A” - Bid Price	6
18.	Contents of Envelope “B” - Bidder Qualifications	6
19.	Labeling of Bid EnvelopeS	6
20.	Withdrawal of Bids Prior to Bid Opening Time	6
21.	Submittal of Bids	6
22.	Bid Opening	7
23.	Bid Evaluation	7
24.	Determination of Apparent Low Bidder (Envelope “A”)	7
25.	Evaluation of Bidder Responsibility (Envelope “B”)	7
26.	Public Records Act Requests, Bid Information, and Confidentiality Waiver	8
27.	Owner’s Right to Reject Bids	9
28.	Notice of Intent to Award for Construction	9
29.	Bid Protests	9
30.	Notice of Award	10
31.	Post-Notice of Award Requirements	10
32.	Failure to Execute and Deliver Documents	11
33.	Return of Bid Security	11

34. Conformed Project Manual 11
35. Modification of Commencement of Work 11
36. Equal Employment Opportunity 11

INSTRUCTIONS TO BIDDERS

Formal Bids are requested for a general construction contract, or work described in general, as follows:

404 AVIATION BOULEVARD ROOF REPLACEMENT

Bid submission: Tuesday, April 14, 2015. Bid submittal deadlines are listed in Document 00100 (Advertisement for Bids) and in paragraph 21 herein.

1. DEFINITIONS

A. All abbreviations and definitions of terms used in this Document 00200 are set forth in Document 00700 (General Conditions) and Section 01420 (References and Definitions).

2. CONTACT INFORMATION

Mailing address:
Sonoma County Water Agency
404 Aviation Boulevard
Santa Rosa, CA 95403-9019

Phone: 707-547-1900
Fax: 707-544-6123
Email: BidderQuestions@scwa.ca.gov

Office:
Sonoma County Water Agency
404 Aviation Boulevard
Santa Rosa, CA 95403-9019

Website address:
www.sonomacountywater.org

3. MINIMUM REQUIREMENTS TO BID

A. Minimum requirements for Bidder:

1) Owner will accept Bids only from Bidders duly licensed in accordance with the California Business & Professions Code. A California "C-39" or "A" contractor's license is required to Bid this Contract. Joint ventures must secure a joint venture license prior to award of this Contract.

2) Bidders must attend one of the Pre-Bid Site Visits and sign an attendance roster as a condition to bidding.

3) The following are minimum requirements for the Bidder to be found responsible to perform the Work.

   a. Five years' experience as a continuously operating entity engaged in the performance of similar work.

   b. Within the past five years completed three construction projects of a similar nature and complexity with a contract dollar amount of at least $450,000 each.

   c. Installation Certification from Roof Membrane Manufacturer.

   d. Sufficient financial strength, stability and resources as measured by Bidder's equity, debt-to-assets ratio, and capability to finance the Work to be performed.

   e. Ability to secure, in accordance with the Contract Documents, the required forms of Construction Performance Bond and Construction Labor and Material Payment Bond.

   f. Ability to obtain required insurance with coverage values that meet minimum requirements.

g. Satisfactory experience on public works, including without limitation no history of default termination, excessively delayed completion, or excessive defective work.

B. Minimum requirements for Bidder and its team:

1) Evidence that Bidder and its team, including without limitation its Photovoltaic, and Framing Subcontractor(s), or the Bidder to the extent Bidder performs such Work itself (hereafter "designated Subcontractor(s)"), have the human and physical resources of sufficient quantity and quality to perform the Work under Contract Documents in a timely and Specification-compliant manner, to include:

a. Minimum licensing requirements including evidence of requisite licenses for Key Personnel of Bidder or any designated Subcontractor.

b. Evidence demonstrating Bidder's commitment to project safety and its ability to complete projects in a safe manner.

c. Construction and management organizations with sufficient personnel and requisite disciplines, licenses, skills, experience, and equipment for the Project.

d. A field organization with skills, experience, and equipment sufficient to perform all on-Site Work and necessary scheduling.

2) Minimum requirements for Key Personnel:

a. Expertise of Key Personnel to accomplish the duties and responsibilities required to perform the Work under Contract Documents. Minimum experience requirements of each Key Personnel include the completion of three projects of similar nature and complexity and three years of experience on projects of similar nature and complexity.

3) Minimum requirements for Photovoltaic (PV) Subcontractor:

a. Evidence that Bidder's named PV Subcontractor, or the Bidder to the extent Bidder performs such Work itself, has the human and physical resources of sufficient quantity and quality to perform those aspects of the Contract in a timely and Specification-compliant manner, to include:

i. California "C-10" or "C-46" or "B" contractor's license.

ii. Within the last three years has installed at least three commercial rooftop solar installations of at least 300 KW capacity.

4) Minimum requirements for Roof Membrane Manufacturer:

a. Evidence that the Roof Membrane Manufacturer has the human and physical resources of sufficient quantity and quality to perform those aspects of the Contract in a timely and Specification-compliant manner, to include:

i. 20 years in production of roofing membrane, and whose products have a record of 20 years successful in-service performance.

ii. Ability to provide a roofing system with a 30 year warranty.

iii. Supplied product for three projects using the proposed type of roofing membrane, including 30,000 square feet or more, in present working condition, and installed prior to July 1994.

iv. Bidder's Installation Certification from Roof Membrane Manufacturer.

4. PROCUREMENT OF BIDDING DOCUMENTS

A. Bidders may examine and obtain Bidding Documents at Owner's Office at the address listed in paragraph 1.A, Contact Information.

B. Electronic Bidding Documents are available on Owner's website.

C. Bidders may obtain hard copies of Bidding Documents upon registration as a Planholder through Owner's office and payment of a non-refundable fee of $20 for each copy. Owner will accept cash or checks payable to "Sonoma County Water Agency." Bidding Documents need not be returned to Owner. Bidding Documents contain a reduced set of Drawings. Bidders may arrange to obtain full-size Drawings as described in Document 00100 (Advertisement for Bids).

5. EXISTING DRAWINGS AND GEOTECHNICAL DATA

A. Bidders may examine any available existing conditions information (e.g., record documents, specifications, studies, drawings of previous work) and applicable environmental assessment information (if any) regarding the Project at the Owner's Office by giving Owner reasonable advance notice. Documents may also be available at Owner's website.

6. MANDATORY PRE-BID SITE VISITS

A. Owner will conduct Pre-Bid Site Visits at 10:00 a.m. on Tuesday, March 24, 2015, and at 2:00 p.m. on Thursday, March 26, 2015, at the Site.

B. Contractors, Subcontractors, Suppliers, and Manufacturer's ("Bidders") will be provided the opportunity to observe site conditions, investigate conditions, or otherwise conduct invasive investigations, explorations, tests, or studies, with Owner's prior consent, at the Pre-Bid Site Visit, subject to delivering an executed Document 00210 (Indemnity and Release Agreement) and providing an insurance certificate as described therein by noon of the Day prior to the Pre-Bid Site Visit. This will be the Bidders only opportunity to investigate conditions at the Site, and will require climbing of a ladder to reach the Site.

C. Bidder is required to attend only one of the Pre-Bid Site Visits. A map showing the meeting place for the Pre-Bid Site Visit(s) is included in Document 00202 (Pre-Bid Site Visit Vicinity Map).

D. Other Pre-Bid Site Visits may be scheduled at Owner's sole discretion, depending on staff availability.

E. The Pre-Bid Site Visit is merely a showing of the Site and existing conditions and will not provide an opportunity for Bidders to have questions answered. Bidders are encouraged, however, to submit written questions. Bidding Documents will not be available at the Pre-Bid Site Visit. Attendees who would like copies of the Bidding Documents must register with Owner as a Planholder.

F. Bidders shall not rely on oral statements. Oral statements will not be binding or legally effective.

7. SUBSTITUTIONS

A. Bidders must base their Bids on products and systems specified in Contract Documents or listed by name in Addenda.

B. Except as provided herein, Owner will consider substitution requests only for "or equal items." Bidders wanting to use "or equal" item(s) may submit Document 00660

(Substitution Request Form) no later than 14 Days prior to submitting their Bids. After that date, Owner will not accept "or equal" substitution requests. To assess "or equal" acceptability of product or system, submittals of substitutions shall contain the information required in Document 00660 (Substitution Request Form) and set forth in Section 01600 (Product Requirements). Insufficient information will be grounds for rejection of substitution. Owner shall, within a reasonable period of time after having received a Request for Substitution, issue in writing its decision as to whether the proposed substitute item is an Equal item. Owner's decision shall be conclusive on all Bidders.

C. Approved substitutions shall be listed in Addenda and become part of the Contract Documents.

D. As further limitation on Bidder's privilege to substitute items, Owner has found that:

1) Certain items are designated as Owner standards and certain items are designated to match existing items in use on a particular public improvement, either completed or in the course of completion. Items that fall in this category include:

a. None.

2) Certain items are designated in order that a field test or experiment may be made to determine the product's suitability for future use. Items that fall in this category include:

a. None.

3) Certain necessary items are only available from one source. Items that fall in this category include:

a. None.

E. As to such items listed above, Owner will not permit substitution.

F. Substitutions may be requested after submitting Bids and Award of Contract only in accordance with requirements specified in Section 01600 (Product Requirements).

8. BIDDER QUESTIONS

A. Bidders must direct all questions about the meaning or intent of Bidding Documents to Owner in writing (see paragraph 1.A, Contact Information). Inquiries must include the full name of the Project. Owner may not answer questions received less than ten Days prior to the date for opening Bids. Only questions answered by formal written Addenda will be binding. Oral and other interpretations or clarifications will be without legal effect.

9. ADDENDA

A. Owner will respond to questions and issue interpretations or clarifications as Owner, in its discretion, considers necessary, in the form of Addenda. Addenda may also be issued to modify the Bidding Documents as deemed advisable by Owner. Addenda will be written and will be issued to each Registered Planholder to the address, fax number, or email supplied to Owner by Bidder.

B. Owner may, in its discretion, choose to delay issuance of addenda in order to address several issues at once. Owner will endeavor to issue addenda in a timely manner.

C. Addenda shall be acknowledged by number with signature in Document 00400 (Bid Form) and shall be part of the Contract Documents. A complete listing of Addenda may be secured from Owner upon written request (see paragraph 1.A, Contact Information).

10. WAGE RATES

A. State prevailing wage rates are applicable to the Project. Copies of the state's general prevailing rates of per diem wages for each craft, classification, or type of worker needed to execute the Contract, as determined by Director of the State of California Department of Industrial Relations, are on file at Owner's Office and are deemed included in the Bidding Documents. Upon request, Owner will make copies available to any interested party. Copies of state wage rates are also available at www.dir.ca.gov/labor_law.html.

B. Contractor shall post the applicable State prevailing wage rates at the Site.

11. OTHER REQUIREMENTS PRIOR TO BIDDING

A. Submission of Bid signifies Bidder's careful examination of Bidding Documents and complete understanding of the nature, extent, and location of Work to be performed. As a condition to Bidding, Bidder must complete tasks listed in Document 00520 (Agreement), Article 5. Submission of Bid shall constitute Bidder's express representation to Owner that Bidder has fully completed these tasks.

12. PREPARATION OF BIDS

A. Bidders must submit Bids in accordance with this Document 00200.

B. All Bidders must submit Bids using, where applicable, documents supplied in these Bidding Documents, including without limitation Document 00400 (Bid Form), Document 00420 (Bidder Registration Form), Document 00430 (Subcontractors List), and Document 00450 (Statement of Qualifications for Construction Work). Bids must be full and complete. Bidders must complete all Bid items and supply all information required by Bidding Documents. Bidders may not modify the Bid Form or qualify their Bids. Bidders must submit clearly and distinctly written Bids. Bidders must clearly make any changes in their Bids by crossing out original entries, entering new entries, and initialing new entries.

C. The submission of a Bid does not commit Owner to award a contract for the Project, to pay costs incurred in the preparation of a Bid, or to procure or contract for any goods or services.

13. REQUIRED BID SECURITY

A. Bidders must submit with their Bids either cash, a cashier's check, or certified check from a responsible bank in the United States, or corporate surety bond furnished by a surety authorized to do business in the State of California, of not less than ten percent of amount of Total Bid price, payable to "Sonoma County Water Agency." All Bidders choosing to submit a surety bond must submit it on the required form, Document 00411 (Bond Accompanying Bid).

14. REQUIRED SUBCONTRACTORS LIST

A. All Bidders must submit with their Bids the required information on all Subcontractors in Document 00430 (Subcontractors List) for those Subcontractors who will perform any portion of Work, including labor, rendering of service, or specially fabricating and installing a portion of the Work or improvement according to detailed drawings contained in the plans and specifications, in excess of one half of one percent of total Bid. Violation of this requirement may result in Bid being deemed non-responsive and not being considered.

15. REQUIRED STATEMENT OF QUALIFICATIONS

A. In order for a Bidder to be eligible to Bid on this Contract, Bidder must submit a Statement of Qualifications responsive to the requirements identified in Document 00450 (Statement of Qualification for Construction Work) ("SOQ"), including without limitation qualification information for Subcontractors and schedulers, if any. Information in the SOQ shall be current.

16. REQUIREMENT FOR SEPARATE SEALED ENVELOPES

A. Owner will receive Bids in two separate opaque sealed 10" x 13" envelopes, labeled Envelope "A" and Envelope "B," each containing the respective items described in paragraphs 17 and 18 of this Document 00200.

17. CONTENTS OF ENVELOPE "A" - BID PRICE

A. Envelope "A" shall include:

1) Document 00400 (Bid Form) completed in accordance with paragraph 12 of this Document 00200.

2) Bid security completed in accordance with Document 00411 and with paragraph 13 of this Document 00200.

3) Document 00430 (Subcontractors List) in accordance with paragraph 14 of this Document 00200 and Document 00430 (Subcontractors List).

4) Document 00481 (Noncollusion Declaration).

18. CONTENTS OF ENVELOPE "B" - BIDDER QUALIFICATIONS

A. Envelope "B" shall include:

1) Statement of Qualifications including all necessary attachments and supporting documents submitted in accordance with paragraph 15 of this Document 00200 and Document 00450 (Statement of Qualifications for Construction Work).

2) Document 00420 (Bidder Registration Form). Bidder must complete this form and include comprehensive answers to all questions.

19. LABELING OF BID ENVELOPES

A. Bidder shall mark its Bid envelopes on the outside with Bidder's name and the following:

BID FOR THE SONOMA COUNTY WATER AGENCY,
CONTRACT NUMBER 0-80-7 #1A,
404 AVIATION BOULEVARD ROOF REPLACEMENT
"Envelope A" or "Envelope B" (as appropriate)

20. WITHDRAWAL OF BIDS PRIOR TO BID OPENING TIME

A. Bidders may withdraw their Bids at any time prior to the Bid opening time fixed in this Document 00200, only by written request for the withdrawal of Bid filed with Owner. Bidder or its duly authorized representative shall execute request to withdraw Bid.

21. SUBMITTAL OF BIDS

A. Sealed Bids will be received on Tuesday, April 14, 2015, at Owner's Office at the address listed in paragraph 1.A, Contact Information, and as shown in the map provided in Document 00203 (Bid Submittal Vicinity Map).

B. Owner's staff will determine official time and will call out the specified time in the Bid reception area of Owner's Office.

C. Envelope "A" shall be due by **2:00 p.m.**

D. Envelope "B" shall be due by **3:00 p.m.**

E. All Bid envelopes will be time-stamped by Owner to reflect their submittal time.

22. BID OPENING

A. Owner's staff will determine official time and will call out the specified time in the Bid reception area of Owner's Office.

B. Owner will open all Bidders' Envelopes "A" at **3:00 p.m.** on the date specified in paragraph 21 above, initially evaluate them for responsiveness, and determine an Apparent Low Bidder as specified herein. Owner will not open Envelopes "B" publicly and, except for the Apparent Low Bidder's Envelope "B" (or as otherwise provided in this Document 00200), they will remain unopened.

23. BID EVALUATION

A. In evaluating Bids, Owner will consider whether or not the Bids comply with the prescribed requirements, unit prices, and other data, as may be requested in Document 00400 (Bid Form) or prior to the Notice of Award. Owner will also consider Bidders' qualifications.

24. DETERMINATION OF APPARENT LOW BIDDER (ENVELOPE "A")

A. Apparent Low Bid will be based solely on the total amount of all Bid items based on assumptions contained in Document 00400 (Bid Form). All Bidders are required to submit Bids on all Bid items.

B. Discrepancies between the multiplication of units of Work and unit prices will be resolved in favor of the unit prices. Discrepancies between the indicated sum of any column of figures and the correct sum thereof will be resolved in favor of the correct sum. Discrepancies between written words and figures will be resolved in favor of the words.

C. Quantities stated in the Bidding Documents are approximate only and are subject to correction upon final measurement of the Work, and are subject further to the rights reserved by Owner to increase or diminish the amount of work under any classification as advantages to design or construction needs require.

25. EVALUATION OF BIDDER RESPONSIBILITY (ENVELOPE "B")

A. Owner may determine whether a Bidder is qualified in its sole discretionary judgment.

B. Owner will open Apparent Low Bidder's Envelope "B" and check its contents for compliance with paragraph 18 of this Document 00200 and this paragraph 25. Owner will notify Apparent Low Bidder in writing of any deficiencies found and will provide Bidder the opportunity to respond in writing with reasonable clarifications but will not allow any changes in the nature of Bidder as a business entity.

C. Written clarifications made by Bidder in response to Owner's requests for clarifications during the Bid evaluation process become part of the Bid.

D. If any Apparent Low Bidder is determined to be non-responsive or non-responsible, Owner may open the next Apparent Low Bidder's Envelope "B" pursuant to any procedures

determined in Owner's reasonable discretion, and proceed for all purposes as if this Apparent Low Bidder were the original Apparent Low Bidder.

E. In order to evaluate Bidder's ability to perform and furnish the Work in accordance with the Contract Documents to Owner's satisfaction within the prescribed time, Owner may conduct reasonable investigations and reference checks of Bidder, proposed Subcontractors, suppliers and other persons and organizations as Owner deems necessary to assist in the evaluation of any Bid and to establish Bidder's responsibility, qualifications, financial ability, proposed Subcontractors, suppliers, and other persons and organizations. Submission of a Bid constitutes Bidder's consent to the foregoing. Owner shall have the right to consider information provided by sources other than Bidder. Owner shall also have the right to communicate directly with Bidder's surety regarding Bidder's bonds.

F. Bidder's compliance with the minimum qualification requirements in this paragraph will be measured by the experience of both the Bidder itself as well as the Key Personnel identified by Bidder in Document 00450 (Statement of Qualifications for Construction Work) who will have responsible charge of the various major components of the Work. If Bidder subcontracts portions of the Work, Owner, in its determination of whether the minimum qualification requirements have been met, will consider the qualifications of the Subcontractor's Key Personnel identified by Bidder in Document 00450 (Statement of Qualifications for Construction Work).

G. Except as otherwise provided in this Document 00200 or in Document 00450 (Statement of Qualification for Construction Work), Owner will make final determinations regarding Bidder responsibility based solely upon the SOQ submitted as part of Envelope "B" on Bid day.

26. PUBLIC RECORDS ACT REQUESTS, BID INFORMATION, AND CONFIDENTIALITY WAIVER

A. Per the Public Records Act, Owner will make available to the public Bidder's SOQ (if Bidder's Envelope "B" is opened), all correspondence and written questions submitted during the Bid period, all Bid submissions opened in accordance with the procedures of this Document 00200, and all subsequent Bid evaluation information. All submissions not opened will remain sealed and eventually be returned to the submitter. Except as otherwise required by law, Owner will not disclose proprietary financial information submitted that has been designated confidential by Bidder (including, but not limited to, audited financial statements and Part C, Financial Information, in Bidder's SOQ). Any such proprietary financial information that a Bidder believes should be exempted from disclosure shall be specifically identified and marked as such. Blanket-type identification by designating whole pages or sections shall not be permitted and shall be invalid.

B. Upon a request for records regarding this Bid which specifically includes confidential information marked by Bidder in accordance with Paragraph A, above, Owner will notify Bidder within ten Days from receipt of the request. If Owner agrees that the information so marked is proprietary financial information exempt from disclosure, Owner shall refuse to disclose the information and Bidder shall take all appropriate legal action and defend Owner's refusal to produce the information in all forums. If Owner does not agree that the information so marked is exempt from disclosure, Owner will so notify Bidder of a specific time when, in response to the request, the records will be made available for inspection in accordance with the Public Records Act.

C. By submitting a bid, Bidder shall be deemed to have waived any objections to the release of all other information and also to the release of any financial information that was not designated as confidential at the time the bid is submitted.

27. OWNER'S RIGHT TO REJECT BIDS

A. Bidder's failure to submit all required documents strictly as required entitles Owner to reject the Bid as non-responsive.

B. Owner will reject all Bids received after the specified time and will return such Bids to Bidders unopened.

C. Owner will reject as non-responsive any Bid not submitted on the required forms.

D. Owner reserves the right in its sole discretion to reject any Bid as non-responsive as a result of any error or omission in the Bid.

E. Owner reserves the right to reject any Bid not clearly written.

F. Owner will reject as non-responsive any Bid submitted without the necessary Bid security.

G. Owner may reject any or all Bids and waive any informalities or minor irregularities in the Bids. Owner also reserves the right, in its discretion, to reject any or all Bids and to re-Bid the Project. Owner reserves the right to reject any or all nonconforming, non-responsive, unbalanced, or conditional Bids, and to reject the Bid of any Bidder if Owner believes that it would not be in the best interest of Project to make an award to that Bidder, whether because the Bid is not responsive or the Bidder is unqualified or of doubtful financial ability or fails to meet any other pertinent standard or criteria established by Owner. For purposes of this paragraph, an "unbalanced Bid" is one having nominal prices for some Bid items and enhanced prices for other Bid items.

28. NOTICE OF INTENT TO AWARD FOR CONSTRUCTION

A. Document 00505 (Notice of Intent to Award for Construction) will be posted at Owner's Office and in the main lobby of the County of Sonoma Administration Building, 575 Administration Drive, Santa Rosa, California. Owner will use reasonable efforts to deliver an electronic copy of Document 00505 (Notice of Intent to Award for Construction) to all Bidders who submitted Bids no later than the Business Day after issuance, although any delay or failure to do so will not extend the Bid protest deadline described below.

29. BID PROTESTS

A. Any Bid protest must be submitted in writing to Owner (Attention: Contract Administration), before 3:30 p.m. of the fifth Business Day following posting of Document 00505 (Notice of Intent to Award for Construction). Owner's staff will determine official time and will call out the specified time in the Bid reception area of Owner's Office, stating that the period for accepting Bid protests is closed.

B. The initial protest document must contain a complete statement of the basis for the protest. The protest must refer to the specific portion of the document that forms the basis for the protest. The protest must include the name, address, and telephone number of the person representing the protesting party.

C. The party filing the protest must concurrently transmit a copy of the initial protest document and any attached documentation to all other parties with a direct financial interest that may be adversely affected by the outcome of the protest. Such parties shall

include all other Bidders who appear to have a reasonable prospect of receiving an award depending upon the outcome of the protest.

D. The procedure and time limits set forth in this paragraph are mandatory and are Bidder's sole and exclusive remedy in the event of Bid protest. Bidder's failure to comply with these procedures shall constitute a waiver of any right to further pursue the Bid protest, including filing a Government Code Claim or legal proceedings. A Bidder may not rely on a protest submitted by another Bidder but must timely pursue its own protest.

30. NOTICE OF AWARD

A. If the Contract is to be awarded, it will be awarded to the lowest responsible responsive Bidder. Following completion of all required Owner procedures and receipt of all Owner approvals, Owner will issue Document 00510 (Notice of Award) to successful Bidder.

31. POST-NOTICE OF AWARD REQUIREMENTS

A. After Notice of Award, the successful Bidder must execute and submit the following documents as indicated below.

B. Submit the following documents to Owner by 5:00 p.m. of the 20th Day following Notice of Award. Execution of Contract by Owner depends upon approval of these documents:

1) Document 00520 (Agreement): To be executed by successful Bidder. Submit four originals, each bearing an original signature on the signature page and initials on each page.

2) Document 00611 (Construction Performance Bond): To be executed by successful Bidder and surety, in the amount set forth in Document 00611 (Construction Performance Bond). Submit four originals. Liquidated Damages are described in Document 00520 (Agreement).

3) Document 00612 (Construction Labor and Material Payment Bond): To be executed by successful Bidder and surety, in the amount set forth in Document 00612 (Construction Labor and Material Payment Bond). Submit four originals.

4) The Guaranty in the form set forth in Document 00630 (Guaranty). Submit four originals, each bearing an original signature.

5) One complete set of documentary information received or generated by successful Bidder in preparation of Bid prices for its Bid, as set forth in Document 00670 (Escrow Bid Documents).

6) Insurance certificates and endorsements required by Article 4 of Document 00700 (General Conditions). Submit one original set.

C. Owner shall have the right to communicate directly with Apparent Low Bidder's proposed performance bond surety, to confirm the performance bond. Owner may elect to extend the time to receive faithful performance and labor and material payment bonds.

1) If Bidder exercises the option to open an Escrow Account, Owner and Contractor shall, at the time the account is opened, deliver to Escrow Agent a fully executed counterpart of Document 00680, Escrow Agreement for Security Deposits in Lieu of Retention.

32. FAILURE TO EXECUTE AND DELIVER DOCUMENTS

A. Successful Bidder's failure to submit the documents required herein, in a proper and timely manner, entitles Owner to rescind its award and to cause Bidder's Bid security to be forfeited as provided herein.

B. If Bidder to whom Contract is awarded, within the period described in paragraph 31 of this Document 00200, fails or neglects to execute and deliver all required Contract Documents and file all required bonds, insurance certificates, and other documents, Owner may, in its sole discretion, foreclose on Bidder's surety bond, or deposit Bidder's cashier's check or certified check for collection, and retain the proceeds thereof as liquidated damages for Bidder's failure to enter into the Contract Documents. Bidder agrees that calculating the damages Owner may suffer as a result of Bidder's failure to execute and deliver all required Contract Documents would be extremely difficult and impractical and that the amount of Bidder's required Bid security shall be the agreed and presumed amount of Owner's damages. In addition, upon such failure, Owner may determine the next Apparent Low Bidder and proceed accordingly.

33. RETURN OF BID SECURITY

A. Owner may retain Bid security of other than the Apparent Low Bidder for a period of 60 Days after issuance of the Notice of Award. After award, Owner will return to the respective unsuccessful Bidders their Bid securities and Bid bonds.

34. CONFORMED PROJECT MANUAL

A. Following Award of Contract, Owner may prepare a conformed Project Manual reflecting Addenda issued during bidding, which will, failing objection, constitute the approved Project Manual.

35. MODIFICATION OF COMMENCEMENT OF WORK

A. Owner expressly reserves the right to modify the date for the Commencement of Work under the Contract and to independently perform and complete work related to the Project. Owner accepts no responsibility to Contractor for any delays attributed to its need to complete independent work at the Site.

36. EQUAL EMPLOYMENT OPPORTUNITY

A. Contractor shall comply with all applicable federal, state, and local laws, rules, and regulations in regard to nondiscrimination in employment because of race, color, ancestry, national origin, religion, sex, marital status, age, medical conditions, disability, or any other reason.

END OF DOCUMENT

DOCUMENT 00202

PRE-BID SITE VISIT VICINITY MAP

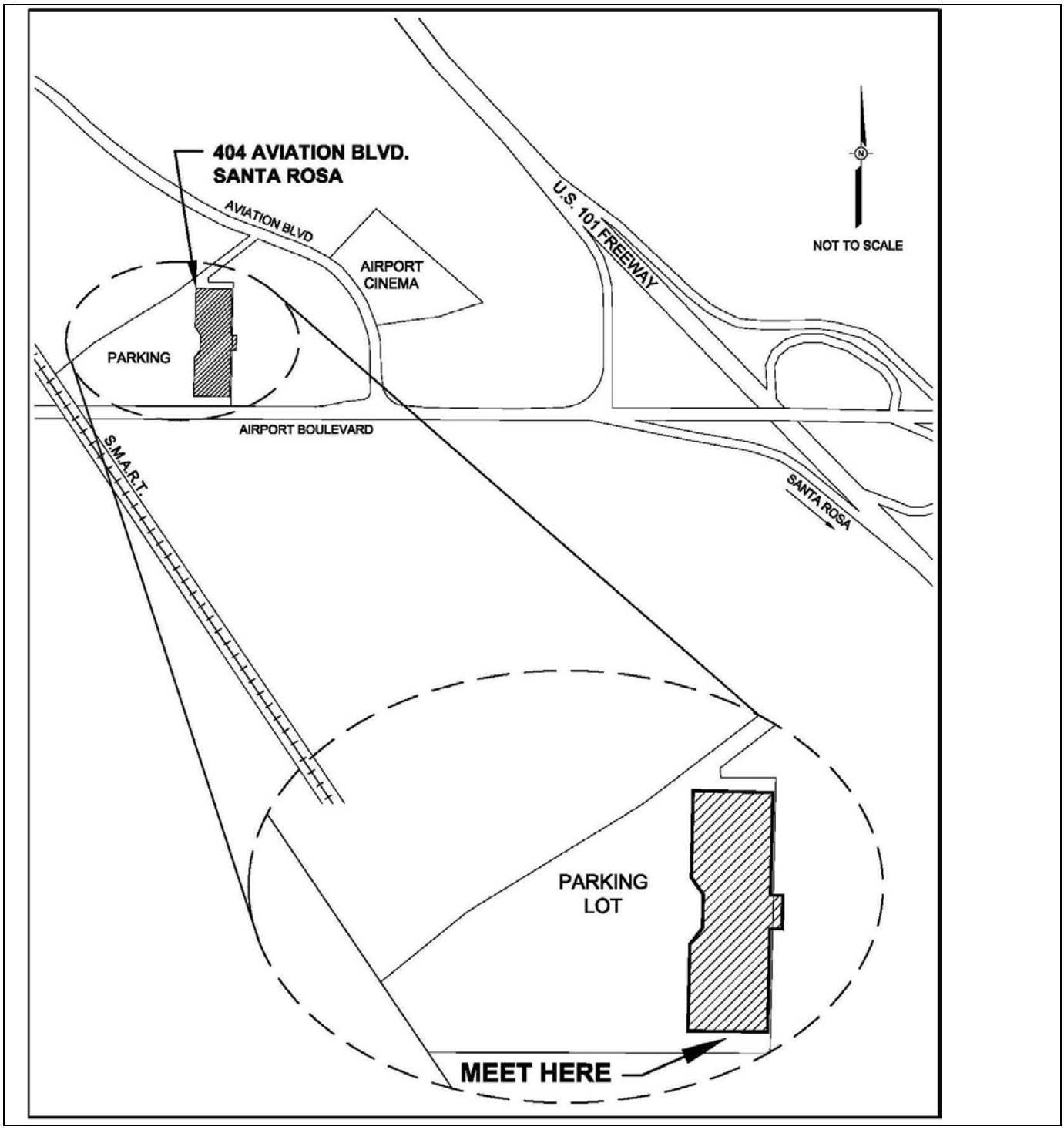

END OF DOCUMENT

DOCUMENT 00203

BID SUBMITTAL VICINITY MAP

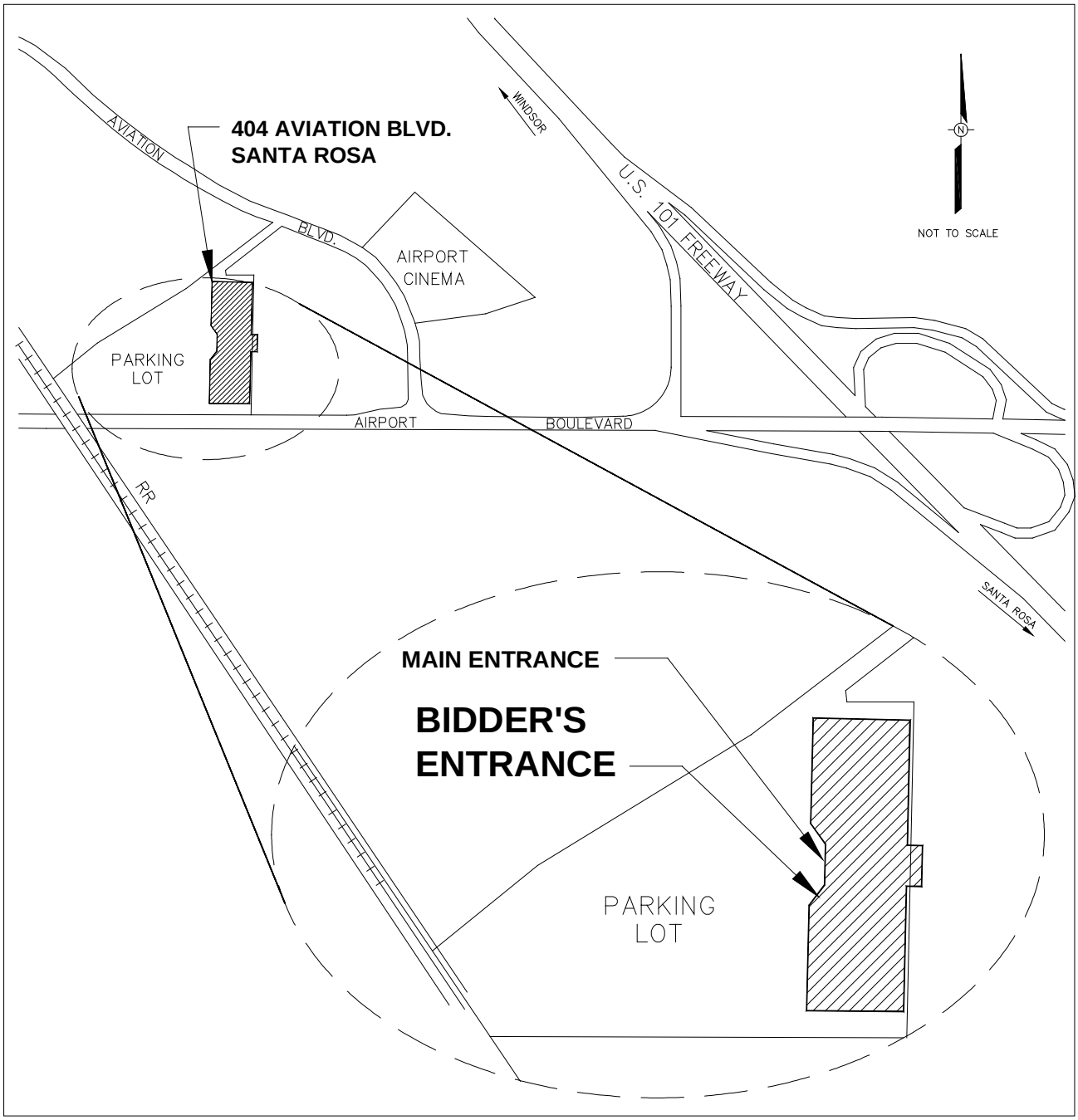

END OF DOCUMENT

DOCUMENT 00210

INDEMNITY AND RELEASE AGREEMENT

Dated _____

POTENTIAL BIDDER: _____

OWNER: SONOMA COUNTY WATER AGENCY

SITE: _____

PROJECT: 404 Aviation Boulevard Roof Replacement

In consideration of the above-referenced Owner's permitting the undersigned potential bidder ("Bidder") to have access to, and to conduct investigations, tests and/or inspections on, the Site, Bidder hereby agrees as follows:

1. To the greatest extent permitted by law, Bidder hereby releases, and shall defend, indemnify and hold harmless Owner, and its officers, employees, consultants, representatives, and agents, and all other parties having any other interest in the Site, against any claim or liability, including attorney's fees, arising from or relating to any Site-related access, investigation, test, inspection and/or other activity conducted by Bidder or any of Bidder's officers, employees, consultants, representatives, and/or agents, regardless of whether claim or liability is caused in part by the negligence of Owner or by any released and indemnified party.

2. Bidder hereby waives the provisions of California Civil Code Section 1542 which provides as follows:

   > A general release does not extend to claims which the creditor does not know or suspect to exist in his favor at the time of executing the release, which if known by him, must have materially affected his settlement with the debtor.

3. Bidder shall repair any damage to the Site or adjacent property resulting from activities authorized hereunder, and return Site to its original condition as directed by Owner, and comply with and be subject to all other requirements and obligations described or referenced in Document 00320 (Geotechnical Data and Existing Conditions)

4. Attached hereto (or to be delivered separately before Bidder's visit to the Site) is a certificate for comprehensive general liability insurance satisfying the requirements of Document 00700 (General Conditions).

5. Although this Indemnity and Release Agreement is not a Contract Document (see Document 00520 [Agreement]), it shall be fully effective and binding regardless of whether Bidder submits a Bid for the subject Project, is awarded a contract for the Project, or otherwise.

_____
Name of Bidder

By: _____
Signature

Its: _____
Title (If Corporation: Chairman, President or Vice President)

By: _____
Signature

Its: _____
Title (If Corporation: Secretary, Assistant Secretary, Chief Financial Officer or Assistant Treasurer)

END OF DOCUMENT

DOCUMENT 00320

GEOTECHNICAL DATA AND EXISTING CONDITIONS

1. SUMMARY

A. This Document 00320 sets forth the terms and conditions under which Bidder may review, study, use, or rely upon geotechnical data at or contiguous to the Site, and existing conditions information concerning existing conditions and Underground Facilities at or contiguous to the Site. This Document 00320, the available geotechnical data, and the supplied existing conditions information are not Contract Documents.

2. REPORT AND INFORMATION

A. Existence of Reports. Owner, its consultants, and prior contractors may have collected documents providing a general description of the Site and conditions of the Work. These documents may consist of geotechnical reports for and around the Site, contracts, contract specifications, tenant improvement contracts, as-built drawings, utility drawings, and information regarding Underground Facilities. These reports, documents and other information are not part of the Contract Documents.

B. Inspection of Reports. Bidders may inspect geotechnical reports, documents, and information regarding existing conditions available at the Owner's Office, and may obtain copies at cost of reproduction and handling upon Bidder's payment for the costs. These reports, documents, and other information are not part of the Contract Documents. Nevertheless, by submitting a Bid, Bidder accepts full responsibility for reviewing, knowing and understanding the contents of all of these materials.

C. Inclusion in Project Manual. Geotechnical reports may be included in the Project Manual and information regarding existing conditions may also be included in the Project Manual, but neither shall be considered part of the Contract Documents.

D. Available Documentation. The following documentation is available for review for Contract Number 0-80-7 #1A through Owner and on Owner's website.

1. Documents of Record – Structural Drawings (8 sheets total)
   Lot 18 Airport Business Center, Airport Corporate Center 1, Aviation Boulevard, Santa Rosa, CA
   MKM and Associates
   December 4, 1997

2. Structural Calculations and Details, Sonoma County Water Agency, Review of (E) Building and Additional Equipment Loading
   404 Aviation Boulevard, Santa Rosa, CA 95403
   Summit Engineering, Inc.
   July 10, 2014

3. Existing HVAC and Skylight Framing Photos
   404 Aviation Boulevard, Santa Rosa, CA 95403
   Sonoma County Water Agency
   July 14, 2014

3. USE OF INFORMATION ON EXISTING CONDITIONS

A. Aboveground Existing Conditions. Under no circumstances shall Owner be deemed to make a warranty or representation of existing aboveground conditions, as-built conditions,

or other aboveground actual conditions verifiable by reasonable independent investigation. These conditions are verifiable by Bidder by the performance of its own independent investigation that Bidder must perform prior to bidding and Bidder must not rely on the information supplied by Owner regarding existing conditions. Bidder represents and agrees that in submitting its Bid, it is not relying on any information regarding existing conditions supplied by Owner.

B. Underground Facilities. Information supplied regarding existing Underground Facilities at or contiguous to the Site is based on information furnished to Owner by others (e.g., the owners or builders of such Underground Facilities or others). Except as expressly set forth in this Document 00320, Owner does not assume responsibility for the accuracy, completeness or thoroughness of this information, and Bidder is solely responsible for any interpretation or conclusion drawn from this information. Except as expressly set forth in this Document 00320, Owner will be responsible only for the general accuracy of information regarding Underground Facilities, and only for those Underground Facilities that are owned by Owner. This express assumption of responsibility applies only if Bidder has conducted the independent investigation required of it and discrepancies were not apparent.

4. LIMITED RELIANCE PERMITTED ON CERTAIN GEOTECHNICAL INFORMATION

A. Geotechnical Data. Except as expressly set forth in this Document 00320, Owner does not warrant, and makes no representation regarding, the accuracy or thoroughness of any geotechnical data. Bidder represents and agrees that in submitting its Bid, it is not relying on any geotechnical data supplied by Owner, except as specifically set forth herein.

1. Bidder may rely upon the general accuracy of the "technical data" contained in the geotechnical reports and drawings identified above, but only insofar as it relates to subsurface conditions, provided Bidder has conducted the independent investigation required of it and discrepancies were not apparent. The term "technical data" in the referenced reports and drawings shall be limited as follows:
   a. The term "technical data" shall include actual reported depths, reported quantities, reported soil types, reported soil conditions, and reported material, equipment, or structures that were encountered during subsurface exploration.
   b. The term "technical data" does not include, and Bidder may not rely upon, any other data, interpretations, opinions or information shown or indicated in such drawings or reports that otherwise relate to subsurface conditions or described structures.
   c. The term "technical data" shall not include the location of Underground Facilities.
   d. Bidder may not rely on the completeness of reports and drawings for the purposes of bidding or construction. Bidder may rely upon the general accuracy of the "technical data" contained in such reports or drawings.
   e. Bidder is solely responsible for any interpretation or conclusion drawn from any "technical data" or any other data, interpretations, opinions, or information contained in supplied geotechnical data.

5. INVESTIGATIONS

A. Before submitting a Bid, each Bidder shall be responsible to obtain such additional or supplementary examinations, investigations, explorations, tests, studies and data concerning conditions (including, but not limited to, surface, subsurface, and Underground Facilities) at or contiguous to the Site or otherwise, which may affect cost, progress, performance or furnishing of Work or which relate to any aspect of the means, methods, techniques, sequences or procedures of construction to be employed by Bidder and safety

precautions and programs incident thereto or which Bidder deems necessary to determine its Bid for performing and furnishing the Work in accordance with the time, price and other terms and conditions of Contract Documents. Bidders shall advise Owner in writing during the Bid period of any questions, suppositions, inferences or deductions Bidders may have for Owner's review and response.

B. Owner has provided time in the period prior to bidding for Bidder to perform these investigations.

6. ACCESS TO SITE FOR INVESTIGATIONS

A. During the Pre-Bid Site Visit(s), Owner will provide each Bidder access to the Site to conduct such examinations, investigations, explorations, tests, and studies, as each Bidder deems necessary for submission of a Bid. Bidders must fill all holes and clean up and restore the Site to its former conditions upon completion of such explorations, investigations, tests, and studies. Such investigations may be performed only under the provisions of Document 00200 (Instructions to Bidders) and Document 00700 (General Conditions) including, but not limited to, proof of insurance and obligation to indemnify against claims arising from such investigation work. Each Bidder shall supply all equipment required to perform any investigations as each Bidder deems necessary. Owner has the right to limit the number of pieces of machinery operating at one time due to safety concerns.

END OF DOCUMENT

DOCUMENT 00400

BID FORM

To be submitted as part of Envelope "A" by the time and date specified in Document 00200 (Instructions to Bidders), paragraph 1.

TO THE HONORABLE BOARD OF DIRECTORS OF THE SONOMA COUNTY WATER AGENCY

THIS BID IS SUBMITTED BY:

_____

(Firm/Company Name)

Re: CONTRACT NUMBER 0-80-7 #1A, 404 AVIATION BOULEVARD ROOF REPLACEMENT

1. The undersigned Bidder proposes and agrees, if this Bid is accepted, to enter into an agreement with the Sonoma County Water Agency, a public agency of the State of California ("Owner") in the form included in the Contract Documents, Document 00520 (Agreement), to perform and furnish all Work as specified or indicated in the Contract Documents for the Contract Sum and within the Contract Time indicated in this Bid and in accordance with all other terms and conditions of the Contract Documents.

2. Bidder accepts all of the terms and conditions of the Contract Documents, Document 00100 (Advertisement for Bids), and Document 00200 (Instructions to Bidders), including, without limitation, those dealing with the disposition of Bid Security. This Bid will remain subject to acceptance for 90 Days after the day of Bid opening.

3. In submitting this Bid, Bidder represents:

   (a) Bidder has examined all of the Contract Documents and all of the Addenda (receipt of all of which is hereby acknowledged). The Addenda are listed below.

Addendum Number	**Addendum Date**	**Signature of Bidder**

   (b) Bidder has visited the Site and performed all tasks, research, investigation, reviews, examinations, and analysis and given notices, regarding the Project and the Site, as set forth in Document 00520 (Agreement), Article 5.

(c) Bidder has given Owner prompt written notice of all conflicts, errors, ambiguities, or discrepancies that it has discovered in or among the Contract Documents and as-built drawings and actual conditions and the written resolution thereof through Addenda issued by Owner is acceptable to Contractor.

4. Based on the foregoing, Bidder proposes and agrees to fully perform the Work within the time stated and in strict accordance with the Contract Documents for the following sums of money listed in the following Schedule of Bid Prices:

SCHEDULE OF BID PRICES

All Bid items, including lump sums and unit prices, must be filled in completely. Bid items are described in Section 01100 (Summary of Work). Quote in figures only, unless words are specifically requested.

ITEM	DESCRIPTION	ESTIMATED QUANTITY	UNIT	UNIT PRICE	TOTAL
1.	Bonds	XXXXXX	Lump Sum	XXXXX	$
2.	Insurance	XXXXXX	Lump Sum	XXXXX	$
3.	Safety Program and Implementation	XXXXXX	Lump Sum	XXXXX	$
4.	Construction Material Waste Management Plan and Implementation	XXXXXX	Lump Sum	XXXXX	$
5.	Mobilization/ Demobilization	XXXXXX	Lump Sum	XXXXX	$
6.	Roofing System	XXXXXX	Lump Sum	XXXXX	$
7.	PV System Removal, Reinstallation, and Testing	XXXXXX	Lump Sum	XXXXX	$
8.	Light Tubes	3	Per Each		$
9.	Roof Sheathing Repair	3,000	SQFT		$
10.	Existing HVAC and Skylight Framing Reinforcements	XXXXXX	Lump Sum	XXXXX	$
11.	All Other Work	XXXXXX	Lump Sum	XXXXX	$
				TOTAL BID PRICE	$
12.	Contingency Reserve	XXXXXX	XXXXXX	XXXXX	$30,000.00
				TOTAL	

Total: _____
(Words)

5. Subcontractors for work included in all Bid items are listed on the attached Document 00430 (Subcontractors List).

6. The undersigned Bidder understands that Owner reserves the right to reject this Bid.

7. If written notice of the acceptance of this Bid, hereinafter referred to as Notice of Award, is mailed or delivered to the undersigned Bidder within the time described in paragraph 2 of this Document 00400 or at any other time thereafter unless the Notice of Award is withdrawn, the undersigned Bidder will execute and deliver the documents required by Document 00200 (Instructions to Bidders) within the times specified therein. These documents include, but are not limited to, Document 00520 (Agreement), Document 00611 (Construction Performance Bond), and Document 00612 (Construction Labor and Material Payment Bond).

8. Notice of Award or request for additional information may be addressed to the undersigned Bidder at the address set forth below.

9. The undersigned Bidder herewith encloses cash, a cashier's check, or certified check of or on a responsible bank in the United States, or a corporate surety bond furnished by a surety authorized to do a surety business in the State of California, in form specified in Document 00200 (Instructions to Bidders), in the amount of ten percent (10%) of the Total Bid Price and made payable to "Sonoma County Water Agency."

10. The undersigned Bidder agrees to commence Work under the Contract Documents on the date established in Document 00700 (General Conditions) and to complete all work within the time specified in Document 00520 (Agreement). The undersigned Bidder acknowledges that Owner has reserved the right to delay or modify the commencement date. The undersigned Bidder further acknowledges Owner has reserved the right to perform independent work at the Site, the extent of such work may not be determined until after the opening of the Bids, and that the undersigned Bidder will be required to cooperate with such other work in accordance with the requirements of the Contract Documents.

11. The undersigned Bidder agrees that, in accordance with Document 00700 (General Conditions), liquidated damages for failure to complete all Work in the Contract within the time specified in Document 00520 (Agreement) shall be as set forth in Document 00520 (Agreement).

12. The names of all persons interested in the foregoing Bid as principals are:

(IMPORTANT NOTICE: If Bidder or other interested person is a corporation, give the legal name of corporation, state where incorporated, and names of president and secretary thereof; if a partnership, give name of the firm and names of all individual co-partners composing the firm; if Bidder or other interested person is an individual, give first and last names in full).

NAME OF BIDDER: _____

licensed in accordance with an act for the registration of Contractors, and with license number: _____ Expiration: _____.

REGISTRATION PURSUANT TO LABOR CODE SECTION 1725.5:
Contractor's registration number: _____

_____ _____
Where incorporated, if applicable

_____

_____
Principals

I certify (or declare) under penalty of perjury under the laws of the State of California that the foregoing is true and correct.

_____
Signature of Bidder

_____
Date of Execution

_____
Place of Execution

NOTE: If Bidder is a corporation, set forth the legal name of the corporation together with the signature of the officer or officers authorized to sign contracts on behalf of the corporation. If Bidder is a partnership, set forth the name of the firm together with the signature of the partner or partners authorized to sign contracts on behalf of the partnership.

Business Address: _____
_____
_____

Contractor's Representative(s), (name, title): _____
_____

Officers authorized to sign contracts: _____
_____
_____

_____
Signature of Officer

_____
Title

_____
Date of Execution

_____
Place of Execution

Telephone Number(s): _____

Fax Number(s): _____

Email address(es): _____

Date of Bid: _____

END OF DOCUMENT

DOCUMENT 00411

BOND ACCOMPANYING BID

KNOW ALL BY THESE PRESENTS:

That the undersigned _____ [Name of Contractor] as Principal and the undersigned as Surety are held and firmly bound unto the SONOMA COUNTY WATER AGENCY, a public agency of the State of California ("Owner"), as obligee, in the penal sum of _____ _____ _____ Dollars ($_____) lawful money of the United States of America being at least ten percent (10%) of the aggregate amount of said Principal _____'s base Bid, for the payment of which, well and truly to be made, we bind ourselves, our successors, executors, administrators, and assigns, jointly and severally, firmly by these presents.

WHEREAS, the said Principal is submitting a Bid for Owner Contract Number 0-80-7 #1A, 404 Aviation Boulevard Roof Replacement.

THE CONDITION OF THIS OBLIGATION IS SUCH that if the Bid submitted by the said Principal be accepted and the Contract be awarded to said Principal and said Principal shall within the required periods enter into the Contract so awarded and provide the required Construction Performance Bond, Construction Labor and Material Payment Bond, insurance certificates, and all other endorsements, forms, and documents required under Document 00200 (Instructions to Bidders), then this obligation shall be void, otherwise to remain in full force and effect.

IN WITNESS WHEREOF, the above bounden parties have executed this instrument this _____ day of _____, 20_____, in _____, California.

(Corporate Seal)

By

_____

Principal

_____

Surety

(Corporate Seal)

By

_____

Attorney in Fact

(Evidence of execution shall be provided by Notarial Acknowledgement of the same, in accordance with California Civil Code section 1189, as amended January 1, 2008.)

END OF DOCUMENT

DOCUMENT 00420

BIDDER REGISTRATION FORM

INSTRUCTIONS

In order to register to undertake work for the Sonoma County Water Agency, Bidder must provide the following:

1) Fill out this registration form completely; do not leave blanks.
2) Provide certificates of insurance or a letter evidencing coverage complying with paragraph 4.2 of Document 00700 (General Conditions).

INDEPENDENT CONTRACTOR REGISTRATION

Contractor's License # _____

Date: _____ Fed I.D. # _____

Full Corporate Name of Company: _____

Street Address: _____

_____

Mailing Address: _____

_____

Phone: _____ Fax: _____

Name of Principal Contact: _____

Type of Business: _____ Sole Proprietor _____ Partnership
_____ Non-Profit 501 C3 _____ Corporation
_____ other (please explain:_____)

INSURANCE

Workers' Compensation:

Carrier: _____

Address: _____

Phone and Fax: _____

Policy Number: _____

General Liability:

Carrier: _____

Address: _____

Phone and Fax: _____

Policy Number: _____

Policy Limits: $ _____

A.M. Best Rating: _____

Automobile Liability:

Carrier: _____

Address: _____

Phone and Fax: _____

Policy Number: _____

Policy Limits: $ _____

A.M. Best Rating: _____

Umbrella or Excess Liability (if required for General Liability and/or Auto Liability):

Carrier: _____

Address: _____

Phone and Fax: _____

Policy Number: _____

Policy Limits: $ _____

A.M. Best Rating: _____

Professional Liability (if applicable, as required by Document 00800 [Supplementary Conditions]):

Carrier: _____

Address: _____

Phone and Fax: _____

Policy Number: _____

Policy Limits: $ _____

A.M. Best Rating: _____

Environmental Impairment Liability (if applicable, as required by Document 00800 [Supplementary Conditions]):

Carrier: _____

Address: _____

Phone and Fax: _____

Policy Number: _____

Policy Limits: $ _____

A.M. Best Rating: _____

BIDDER CERTIFIES, UNDER PENALTY OF PERJURY, THAT THE FOREGOING INFORMATION IS CURRENT AND ACCURATE AND AUTHORIZES THE SONOMA COUNTY WATER AGENCY, AND ITS AGENTS AND REPRESENTATIVES TO OBTAIN A CREDIT REPORT AND/OR VERIFY ANY OF THE ABOVE INFORMATION.

_____
Signature

_____
Date

END OF DOCUMENT

DOCUMENT 00430

SUBCONTRACTORS LIST

Bidder submits the following information as to the subcontractors Bidder intends to employ if awarded the Contract.

Full Name of Subcontractor and Address of Mill or Shop	Email address of Subcontractor	Description of Work: Reference To Bid Items	Subcontractor's License No.	Subcontractor's registration number pursuant to Labor Code section 1725.5

(Bidder to attach additional sheets if necessary)

END OF DOCUMENT

DOCUMENT 00450

STATEMENT OF QUALIFICATIONS FOR CONSTRUCTION WORK

STATEMENT OF QUALIFICATIONS CHECKLIST

This checklist is for Bidder's convenience and lists some of the completed documents Bidder shall ensure are submitted with Bidder's Statement of Qualifications.

- ☐ Letter of Assurance Regarding Performance and Payment Bonds (Document 00450, Attachment "A"). Modification of this form may result in rejection of the bid as non-responsive.
- ☐ Authorization to Contact Surety Form (Document 00450, Attachment "B")
- ☐ Statement of Qualifications Questionnaire (Document 00450, Attachment "C")
- ☐ Technical Resources identification and description
- ☐ Résumés of Key Personnel
- ☐ Cal/OSHA 300A log for 2014
- ☐ Prime Contractor's Installation Certification from Roof Membrane Manufacturer
- ☐ Evidence that the PV Subcontractor has installed at least three commercial rooftop solar installations of at least 300 KW capacity within the last 3 years.
- ☐ Evidence of ability of Roof Membrane Manufacturer to provide 30 year warranty

(This page intentionally left blank)

1. REQUIRED CONTENTS OF SOQ SUBMISSION

A. Financial Capacity. Owner reserves the right to require submission of audited or reviewed financial statements for the three most recently completed fiscal years for Bidder and each member of any proposed consortium or joint venture, prior to issuance of the Notice of Award. If required, Bidder must also include audited or reviewed financial statements for the three most recently completed fiscal years for any parent company(ies) of Bidder and each member of any proposed consortium or joint venture. Bidder shall fully disclose the nature and extent of any material changes in Bidder's financial condition since the date of its most recent audited or reviewed financial statement(s).

B. Capability to Provide Required Performance and Payment Bonds.
   1. Include a completed "Letter of Assurance Regarding Performance and Payment Bonds" from Bidder's Surety in the form attached to this Document 00450 as Attachment "A";
   2. Include a completed "Authorization to Contact Surety" from Bidder in the form attached to this Document 00450 as Attachment "B."

C. Human and Physical Resources. Identify, describe, and quantify for Bidder and separately for Bidder's "designated Subcontractor(s)" (as defined in Document 00200 Instructions to Bidders), if any, the following technical resources for the Work:
   1. For products or materials listed in the "Major Products List" (see Section 01330 [Submittal Procedures]), provide description and location of manufacturing facilities, naming products and quantifying production capacity and current demand;
   2. Description of field organization(s), naming skills and equipment;
   3. Description of safety program, quality control procedures, and safety experience; and
   4. Evidence of a valid California contractor's license and required licenses of all persons who are Key Personnel of the Bidder or any designated Subcontractor.

D. Completed Questionnaire. Include a completed "Statement of Qualifications Questionnaire" in the form attached to this Document 00450 as Attachment "C." Add supplementary information if necessary.

E. Résumés of Proposed Key Personnel. Include a resume for each named Key Personnel of Bidder, and Bidder's (including but not limited to the superintendent) designated Subcontractor(s), to include the following:
   1. Name and proposed assignment of Key Personnel - do not include home addresses or phone numbers;
   2. Years of experience;
   3. Education - degrees, schools, and years obtained;
   4. Professional registration(s);
   5. Fluency in English (Yes/No);
   6. Experience directly related to above proposed assignment;
   7. At least three client references, including contact names, addresses, and telephone numbers; and
   8. Description of experience requirements as required by Document 00200 (Instructions to Bidders).

F. Litigation History. Bidder shall submit a description of all claims and litigation matters, whether pending or resolved, brought by or against Bidder in the last five (5) years, which description shall include, for each such matter, the names of involved parties, the nature of dispute, and its disposition, including the dollar amount of any judgment or settlement.

2. GENERAL CONDITIONS

A. General Conditions for Content. The SOQ shall be clear and concise to enable management-oriented personnel to make a thorough evaluation and arrive at a sound determination as to whether the SOQ meets Owner's requirements. To this end, the SOQ shall be so specific, detailed, and complete as to demonstrate clearly and fully that the Bidder has a thorough understanding of and has demonstrated knowledge of the requirements to perform the Work (or applicable portion thereof).

B. Explanations to SOQ. Any explanation requested by a Bidder regarding the meaning or interpretation of this Document 00450 shall be requested in writing in accordance with Document 00200 (Instructions to Bidders). Oral explanations or instructions will not be binding. Any information provided to any prospective Bidder concerning this Document 00450 will be furnished to all prospective Bidders as an Addendum to the Bidding Documents.

3. DEFINITIONS

A. Except as set forth herein, all abbreviations and definitions of terms used in this Document 00450 are as set forth in Document 00700 (General Conditions) or Section 01420 (References and Definitions).

LETTER OF ASSURANCE REGARDING PERFORMANCE AND PAYMENT BONDS, AUTHORIZATION TO CONTACT SURETY FORM, AND STATEMENT OF QUALIFICATION QUESTIONNAIRE ARE ON FOLLOWING PAGES

ATTACHMENT "A" -- Letter of Assurance Regarding Performance and Payment Bonds

To Sonoma County Water Agency:

This letter is written by _____ [insert name of surety], a surety duly licensed to do business in the State of California, having a financial rating from A. M. Best Company of A or better. The purpose of this letter is to advise the Sonoma County Water Agency that this surety has agreed to provide _____ [insert name of Bidder] with the required performance and payment bonds in accordance with the requirements set forth in Documents 00611 (Construction Performance Bond) and 00612 (Construction Labor and Material Payment Bond) for the 404 Aviation Boulevard Roof Replacement, if the Bid submitted by said Bidder is accepted and the Contract is awarded to said Bidder. These performance and payment bonds shall be in the minimum penal sums provided therein.

_____
Signature of Surety's Authorized Representative

_____
Name and Title

_____
Date

ATTACHMENT "B" -- Authorization to Contact Surety

The Sonoma County Water Agency is hereby authorized to verify with the Surety identified in Attachment "A" that the Surety will, based upon Bid prices, issue the required bonds under the conditions stated in Attachment "A."

_____
Signature of Bidder's Authorized Representative

_____
Name and Title

_____
Date

ATTACHMENT "C" -- Statement of Qualifications Questionnaire

Bidders shall complete the entire Statement of Qualification Questionnaire and submit it in accordance with Document 00200 (Instructions to Bidders) and this Document 00450. Failure to complete the questionnaire or inclusion of any false statement(s) shall be grounds for immediate disqualification. Label attachments with a reference to the related document, part, and question number.

BIDDER'S CONTACT INFORMATION

Company Name: _____

Owner of Company: _____

Contact Person: _____

Address: _____

Phone: _____ Fax: _____

PART A: GENERAL INFORMATION

Complete Part A before proceeding to Part B.

1. Does Bidder possess a valid and current California Contractor's license for the Work proposed? Yes _____ No _____
2. Does Bidder have minimum general liability insurance coverage as required by Document 00800 (Supplementary Conditions)? Yes _____ No _____

Bidder will be immediately disqualified if any answer to questions 1 or 2 above is No.

3. Has Bidder's license been suspended or revoked at any time in the last five years? Yes _____ No _____
4. Has Bidder been "default terminated" by an owner (other than for convenience), or has a Surety completed a contract for Bidder within the last five years? Yes _____ No _____
5. Labor Commissioner assessments or determination of ineligibility to bid:
   a. Has Bidder had a final civil wage and penalty assessment against it from the Labor Commissioner more than twice in the last five years? Yes _____ No _____
   b. Has Bidder been determined by the Labor Commissioner to be ineligible to bid on public contracts more than twice in the last five years? Yes _____ No _____

Bidder will be immediately disqualified if any answer to questions 3, 4, 5.a, or 5.b above is Yes.

PART B: SAFETY, PREVAILING WAGE, DISPUTES, AND BONDS

(SAFETY)

1. Do you have any Cal/OSHA Citations or Penalties: Yes_____ No_____
   If yes, please submit the following information to determine if Bidder meets the suggested safety criteria for this Project. Describe any Cal/OSHA citations and penalties that Bidder has received in the last three years. For each occurrence state whether the action by Cal/OSHA resulted in a citation, or a penalty, or both. Describe the activities that led to the action by Cal/OSHA. Provide dates, citation numbers, penalty amounts, and any other relevant information regarding the action by Cal/OSHA. Responses shall be machine written or neatly printed on company letterhead and signed by an officer of the company.

   ☐ Separate sheet attached.

2. Experience Modification Rates:
   What were Bidder's Interstate Experience Modification Rates as established by the Workers' Compensation Insurance Rating Bureau for the following three years?

   2012: _____
   2013: _____
   2014: _____

   Average of last three years: _____ (no rounding)

   If Bidder was not eligible to obtain a formal rating from the Workers' Compensation Insurance Rating Bureau for any of the years listed above, Bidder shall submit written documentation from its workers' compensation insurance company that establishes what Bidder's equivalent experience modification rate would be.

   If average of last three years is greater than 1.1, Bidder shall provide an explanation here or as a separate attachment:

   _____

   _____

   _____

3. Total Recordable Incident Rates (RIR):
   What were Bidder's Total Recordable Incident Rates (RIR) for each of the last three complete years?

   2012: _____
   2013: _____
   2014: _____

   Average of last three years: _____ (no rounding)

4. Total Lost Time Incident Rates (LTIR):
What were Bidder's Total Lost Time Incident Rates (LTIR) for each of the last three complete years?

2012: _____
2013: _____
2014: _____

Average of last three years: _____ (no rounding)

5. State the name of Bidder's safety engineer/manager or Site Safety Officer: _____
Attach a résumé or outline of this individual's safety and health qualifications and experience.

(PREVAILING WAGE PROVISIONS)

6. In the past five years, has Bidder been fined, penalized or otherwise found to have violated any prevailing wage or labor code provision? If yes, attach description of each occurrence.
Yes_____ No_____

(LICENSE PROVISIONS)

7. In the past five years, has Bidder changed names or license numbers? If so, please state reason for change and list previous name(s) and any previous license number for any of Bidder's principals.

Yes_____ No_____ Reason: _____

_____

Previous name(s) and license number(s): _____

_____

(DISPUTES)

8. In the past five years, has Bidder had any claims, litigation (pending or resolved), or disputes resulting in mediation or arbitration, or termination for cause associated with any project?
Yes _____ No _____
If yes, attach description of each such instance including details of total claim amount, judgment amount, or settlement amount, and the adverse party's (or parties') name(s) and phone number(s).

(BONDING)

9. Bonding Capacity - Provide documentation from Bidder's surety identifying the following:
   Name of bonding company/surety: _____

   Name of Surety Agent: _____

   Surety Agent address: _____

   Surety Agent phone number: _____

   Is surety a California-admitted surety? Yes _____ No _____

   Is surety listed in the current edition of the California Department of the Treasury's Listing of approved sureties? Yes _____ No _____

   List surety's A.M. Best Rating: _____

   What is Bidder's total bonding capacity? _____

   What percentage rate does Bidder pay for bonds? _____

PART C: FINANCIAL INFORMATION

1. Has Bidder ever reorganized under the protection of the bankruptcy laws?
   Yes____ No _____ If yes, please state when _____

2. If Bidder has had the general liability carrier identified in Document 00420 (Bidder Registration Form) for less than five years, please provide additional information below for balance of the past five years.
   Agency Name: _____

   Contact Name: _____

   Phone Number: _____

   Carrier: _____ Dates: _____ A.M. Best Rating: _____

   Carrier: _____ Dates: _____ A.M. Best Rating: _____

   Carrier: _____ Dates: _____ A.M. Best Rating: _____

3. Has Bidder ever had insurance terminated by a carrier? Yes _____ No _____
   If yes, explain on separate signed sheet marked with correlating cross-reference to this paragraph of the questionnaire.

4. Does Bidder have any outstanding or unsatisfied judgments? Yes _____ No _____
   If yes, attach for each such judgment an explanation of the steps Bidder has taken to ensure the judgment won't interfere with Bidder's performance of the Work.

PART D: EXPERIENCE OF PRIME CONTRACTOR

The unique nature of this Project requires prior similar experience of the firm and the Key Personnel assigned. Summarize similar project experience below and provide the detailed project information requested:

Years of Experience. List years of experience as a continuously operating entity engaged in the performance of similar work (Five years required, minimum): _____

Certification. Installation Certification from Roof Membrane Manufacturer

Key Personnel. List Key Personnel who will be assigned to the Work:

Project Manager: _____

Project Superintendent: _____

Project Scheduler: _____

Qualifying Projects. List three construction projects of a similar nature and complexity, completed within the past five years, with a contract dollar amount of at least $450,000 each. Names and references must be current and verifiable. If a separate sheet is used, it must contain all of the information shown on the table that follows:

LIST OF QUALIFYING PROJECTS - PRIME CONTRACTOR

	Project 1	Project 2	Project 3
Project Name			
Location			
Client			
Client Contact (name and phone number)			
Construction Manager, Project Manager, or Superintendent (name and phone number)			
Description of Project, Scope of Work Performed			
Total Construction Cost			
Completion Date			

Recent Projects.
Provide information about three most recently completed projects. Names and references must be current and verifiable. If a separate sheet is used, it must contain all of the following information:

	Recent Project 1	Recent Project 2	Recent Project 3
Project Name			
Location			
Client			
Client Contact (name and phone number)			
Construction Manager, Project Manager, or Superintendent (name and phone number)			
Description of Project, Scope of Work Performed			
Total Construction Cost			
Completion Date			
Total Change Order Amount			
Original Scheduled Date of Completion			
Time Extensions Granted (number of Days)			
Actual Date of Completion			
Number of Stop Notices filed by subcontractors or suppliers			

PART E: EXPERIENCE OF DESIGNATED SUBCONTRACTOR(S)

Photovoltaic Subcontractor

The unique nature of this project requires specific licensing and certification of the Photovoltaic Subcontractor, including the Bidder to the extent Bidder performs such Work itself.

License. Attach evidence of a California "C-10" or "C-46" or "B" contractor's license.

Qualifying Projects. List three projects of a similar nature and complexity, completed within the past three years, with at least a 300 KW capacity. Names and references must be current and verifiable. If a separate sheet is used, it must contain all of the information shown on the table that follows:

LIST OF QUALIFYING PROJECTS – PHOTOVOLTAIC SUBCONTRACTOR

	Recent Project 1	Recent Project 2	Recent Project 3
Project Name			
Location			
Capacity (KW)			
Client			
Client Contact (name and phone number)			
Construction Manager, Project Manager, or Superintendent (name and phone number)			
Description of Project, Scope of Work Performed			
Total Construction Cost			
Completion Date			
Total Change Order Amount			
Original Scheduled Date of Completion			
Time Extensions Granted (number of Days)			
Actual Date of Completion			
Number of Stop Notices filed by subcontractors or suppliers			

PART F: ADDITIONAL EXPERIENCE REQUIREMENTS

Roof Membrane Manufacturer

Name of Roof Membrane Manufacturer:_____

Proposed Roof Membrane: _____

The Roof Membrane Manufacturer shall have the human and physical resources of sufficient quantity and quality to perform those aspects of the Contract in a timely and Specification-compliant manner, to include:

Years in Production. List years in production of proposed roofing membrane (Twenty years required, minimum): _____

Warranty. Attach evidence of ability to provide a roofing system with a 30 year warranty.

Qualifying Projects. List three construction projects of a similar nature and complexity, supplied within the past five years, with a square footage of at least 30,000 each. Names and references must be current and verifiable. If a separate sheet is used, it must contain all of the information shown on the table that follows:

LIST OF QUALIFYING PROJECTS – ROOF MEMBRANE MANUFACTURER

	Project 1	Project 2	Project 3
Project Name			
Location			
Client or Occupant			
Client Contact (name and phone number)			
Type of Roof Membrane			
Size in square feet, (30,000 SF required, minimum)			
Installation date			
Currently in working condition? (Yes or No)			

Bidder certifies, under penalty of perjury, that the foregoing information is current and accurate and authorizes the Sonoma County Water Agency, and its agents and representatives to obtain a credit report and/or verify any of the above information.

_____
Signature

_____
Title

END OF DOCUMENT

DOCUMENT 00481

NONCOLLUSION DECLARATION
PUBLIC CONTRACT CODE §7106

NONCOLLUSION DECLARATION TO BE EXECUTED BY BIDDER AND SUBMITTED WITH BID
The undersigned declares:

I am the _____ of _____, the party making the foregoing bid.
[Office of Declarant] [Name of Bidder]

The bid is not made in the interest of, or on behalf of, any undisclosed person, partnership, company, association, organization, or corporation. The bid is genuine and not collusive or sham. The bidder has not directly or indirectly induced or solicited any other bidder to put in a false or sham bid, and has not directly or indirectly colluded, conspired, connived or agreed with any bidder or anyone else to put in a sham bid, or to refrain from bidding. The bidder has not in any manner, directly or indirectly, sought by agreement, communication or conference with anyone to fix the bid price of the bidder or any other bidder, or to fix any overhead, profit or cost element of the bid price, or of that of any other bidder. All statements contained in the bid are true. The bidder has not, directly or indirectly, submitted his or her bid price or any breakdown thereof, or the contents thereof, or divulged information or data relative thereto, to any corporation, partnership, company, association, organization, bid depository, or to any member or agent thereof, to effectuate a collusive or sham bid, and has not paid, and will not pay, any person or entity for such purpose.

Any person executing this declaration on behalf of a bidder that is a corporation, partnership, joint venture, limited liability company, limited liability partnership, or any other entity, hereby represents that he or she has full power to execute, and does execute, this declaration on behalf of the bidder.

I declare under penalty of perjury under the laws of the State of California that the foregoing is true and correct and that this declaration is executed on _____ [date], at _____ [city], _____ [state].

_____
Signature of Principal

END OF DOCUMENT

CONTRACTING REQUIREMENTS

DOCUMENT 00505

NOTICE OF INTENT TO AWARD FOR CONSTRUCTION

DATE POSTED: _____

CONTRACT NUMBER: 0-80-7 #1A

PROJECT TITLE: 404 AVIATION BOULEVARD ROOF REPLACEMENT

Grant Davis, the General Manager of the Sonoma County Water Agency, intends to recommend to the Board of Directors of the Sonoma County Water Agency the award of the above-referenced Project to _____.
(Name of Contractor)

Grant Davis
General Manager

By: _____

_____
(Print name)

Title: _____

Date: _____

END OF DOCUMENT

DOCUMENT 00510

NOTICE OF AWARD

Dated _____

TO: _____

ADDRESS: _____

CONTRACT NO.: 0-80-7 #1A

CONTRACT FOR:

404 Aviation Boulevard Roof Replacement

The Contract Sum of your contract is _____ _____ Dollars ($_____).

1. Several copies of the proposed Contract Documents listed below accompany this Notice of Award.

2. You must comply with the following conditions precedent by 5:00 p.m. of the 20th Day following the date of this Notice of Award, that is, by _____, _____ [month day, year].

   a. Deliver to Owner four fully executed counterparts of Document 00520 (Agreement). Each copy of Document 00520 (Agreement) must bear your original signature on the signature page and your initials on each page.
   b. Deliver to Owner four originals of Document 00611 (Construction Performance Bond), executed by you and your surety.
   c. Deliver to Owner four originals of Document 00612 (Construction Labor and Material Payment Bond), executed by you and your surety.
   d. Deliver to Owner original set of the insurance certificates with endorsements required under Document 00700 (General Conditions).
   e. Deliver to Owner four original copies of Document 00630 (Guaranty), each executed by you.
   f. Deliver to Owner one complete set of the documentary evidence received or generated by you in preparation of Bid prices for this Contract, as set forth in Document 00670 (Escrow Bid Documents).

3. Failure to comply with these conditions within the time specified will entitle Owner to consider your Bid abandoned, to annul this Notice of Award, and to declare your Bid security forfeited.

4. Within 21 Days after you comply with the conditions in paragraph 2 of this Document 00510, Owner will return to you one fully signed counterpart of Document 00520 (Agreement) with ten copies of the Project Manual (including Specifications and Drawings) and five sets of full-size Drawings.

5. Attend a Post-Notice of Award Meeting at Owner's office. This meeting will be scheduled for approximately one week after this Notice of Award is issued.

6. Upon commencement of Work, you and each of your Subcontractors shall certify and provide to Owner copies of payroll records on forms provided by the Division of Labor Standards Enforcement, in accordance with Section 1776 of the California Labor Code.

SONOMA COUNTY WATER AGENCY
A Public Agency of the State of California ("Owner")

BY: _____
Grant Davis, General Manager

END OF DOCUMENT

DOCUMENT 00520

AGREEMENT

Order#: 7616

THIS AGREEMENT, dated this ___ day of _____, 20__ , by and between _____ [Name of Contractor] whose place of business is located at _____ [Address of Contractor] ("Contractor"), and the SONOMA COUNTY WATER AGENCY ("Owner"), a public agency of the State of California acting under and by virtue of the authority vested in the Owner by the laws of the State of California.

WHEREAS, Owner, by its Board Action on the _____ day of _____ awarded to Contractor the following Contract:

CONTRACT NUMBER 0-80-7 #1A
404 AVIATION BOULEVARD ROOF REPLACEMENT

NOW, THEREFORE, in consideration of the mutual covenants hereinafter set forth, Contractor and Owner agree as follows:

Article 1. Work

1.1 Contractor shall complete all Work specified in the Contract Documents, in accordance with the Specifications, Drawings, and all other terms and conditions of the Contract Documents.

Article 2. Notices to Owner

2.1 Owner has designated Dennis Daly, Construction Management Section Manager, to act as Owner's Representative(s), who will represent Owner in performing Owner's duties and responsibilities and exercising Owner's rights and authorities in Contract Documents. Owner may change the individual(s) acting as Owner's Representative(s), or delegate one or more specific functions to one or more specific Owner's Representatives, including without limitation engineering, architectural, inspection and general administrative functions, at any time with notice and without liability to Contractor. Each Owner's Representative is the beneficiary of all Contractor obligations to Owner, including without limitation, all releases and indemnities.

2.2 All notices or demands to Owner under the Contract Documents shall be to Owner's Representative at:

Hard copies: 404 Aviation Blvd., Santa Rosa, California 95403-9019
Electronic: address to be provided to Contractor by Owner with Notice to Proceed

or to such other person(s) and address(es) as Owner shall provide to Contractor.

Article 3. Contract Time and Liquidated Damages

3.1 Contract Time.

Contractor shall commence Work on the date established in the Notice to Proceed. Owner reserves the right to modify or alter the Commencement Date of the Work.

Contractor shall achieve Substantial Completion of the entire Work within 90 Days from the date when the Contract Time commences to run as provided in Document 00700 (General Conditions). Contractor shall achieve Final Completion of the entire Work and be ready for Final Payment in accordance with Section 01770 (Contract Closeout) 120 Days from the date when the Contract Time commences to run as provided in Document 00700 (General Conditions).

3.2 Liquidated Damages.

Owner and Contractor recognize that time is of the essence of this Agreement and that Owner will suffer financial loss in the form of Contract administration expenses (such as Project management and consultant expenses), if all or any part of the Work is not completed within the times specified above, plus any extensions thereof allowed in accordance with the Contract Documents. Consistent with Article 15 of Document 00700 (General Conditions), Contractor and Owner agree that because of the nature of the Project, it would be impractical or extremely difficult to fix the amount of actual damages incurred by Owner because of a delay in completion of all or any part of the Work. Accordingly, Owner and Contractor agree that as liquidated damages for delay Contractor shall pay Owner:

A. One thousand three hundred dollars ($1,300.00) for each Day that expires after the time specified herein for Contractor to achieve Substantial Completion of the entire Work, until achieved.
B. Six hundred dollars ($600.00) for each Day that expires after the time specified herein for Contractor to achieve Final Completion of the entire Work, until achieved.

These measures of liquidated damages shall apply cumulatively and except as provided below, shall be presumed to be the damages suffered by Owner resulting from delay in completion of the Work.

Liquidated damages for delay shall only cover administrative, overhead, interest on bonds, and general loss of public use damages suffered by Owner as a result of delay. Liquidated damages shall not cover the cost of completion of the Work, or other damages, including but not limited to damages resulting from Defective Work, lost revenues or costs of substitute facilities, penalties and other costs associated with violation of legal requirements or damages suffered by others who then seek to recover their damages from Owner (for example, delay claims of other contractors, subcontractors, tenants, or other third-parties), and defense costs thereof.

3.3 Service Reduction Damages.

Owner and Contractor recognize that Owner will also suffer financial loss from Owner's reduced ability to operate due to the disruption, relocation, or evacuation of Owner's staff in the

event that Contractor's acts or omissions create an unsafe or otherwise untenable work environment for Owner's staff. Contractor and Owner agree that because of the nature of the Project, it would be impractical or extremely difficult to fix the amount of actual damages incurred by Owner because of such operational disruptions. Accordingly, Owner and Contractor agree that as damages for such operational disruptions, Contractor shall pay Owner:

A. For each of Owner's staff affected by the disruption, the product of (i) the fully-loaded hourly rate of that staff person and (ii) the number of hours that the staff person was unable to work in their assigned office space, rounded to the nearest half-hour. Owner's staffing costs range from $38.20 to $167.40 per hour per employee.

These damages shall apply regardless of the availability of alternative work spaces for Owner's staff. However, these damages shall not apply if Owner has granted Contractor specific written approval for a specific operational disruption in advance of the disruption. These measures of damages, except as provided below, shall be presumed to be the damages suffered by Owner resulting from a disturbance to Owner's business operations by virtue of a relocation or evacuation of any of Owner's staff.

Damages under this Section 3.3 shall only cover Owner's financial and administrative loss from inability or difficulty in maintaining ordinary business operations due to the disturbances described above and not any other loss or damage, liquidated or otherwise, suffered by Owner as a result of other causes. Damages under this Section 3.3 shall not cover the cost of completion of the Work, damages resulting from Defective Work, costs of substitute facilities, or damages suffered by others who then seek to recover their damages from Owner (for example, delay claims of other contractors, subcontractors, tenants, or other third-parties), and defense costs thereof.

Article 4. Contract Sum

4.1 Owner shall pay Contractor the Contract Sum for completion of Work in accordance with Contract Documents as follows:

ITEM	DESCRIPTION	ESTIMATED QUANTITY	UNIT	UNIT PRICE	TOTAL
1.	Bonds	XXXXXX	Lump Sum	XXXXX	$
2.	Insurance	XXXXXX	Lump Sum	XXXXX	$
3.	Safety Program and Implementation	XXXXXX	Lump Sum	XXXXX	$
4.	Construction Material Waste Management Plan and Implementation	XXXXXX	Lump Sum	XXXXX	$
5.	Mobilization/ Demobilization	XXXXXX	Lump Sum	XXXXX	$
6.	Roofing System	XXXXXX	Lump Sum	XXXXX	$

ITEM	DESCRIPTION	ESTIMATED QUANTITY	UNIT	UNIT PRICE	TOTAL
7.	PV System Removal, Replacement and Testing	XXXXXX	Lump Sum	XXXXX	$
8.	Light Tubes	3	Per Each		$
9.	Roof Sheathing Repair	3,000	SQFT		$
10.	Existing HVAC and Skylight Framing Reinforcements	XXXXXX	Lump Sum	XXXXX	$
11.	All Other Work	XXXXXX	Lump Sum	XXXXX	$
				TOTAL BID PRICE	$
12.	Contingency Reserve	XXXXXX	XXXXXX	XXXXX	$30,000.00
				TOTAL	

Article 5. Contractor's Representations

In order to induce Owner to enter into this Agreement, Contractor makes the following representations and warranties:

5.1 Contractor has visited the Site and has examined thoroughly and understood the nature and extent of the Contract Documents, Work, Site, locality, actual conditions, as-built conditions, and all local conditions, and federal, state and local laws and regulations that in any manner may affect cost, progress, performance or furnishing of Work or which relate to any aspect of the means, methods, techniques, sequences or procedures of construction to be employed by Contractor and safety precautions and programs incident thereto.

5.2 Contractor has examined thoroughly and understood all reports of exploration and tests of subsurface conditions, as-built drawings, drawings, products specifications or reports, available for Bidding purposes, of physical conditions, including Underground Facilities, which are identified in Document 00320 (Geotechnical Data and Existing Conditions) or which may appear in the Drawings. Contractor accepts the determination set forth in these Documents and Document 00700 (General Conditions) of the limited extent of the information contained in such materials upon which Contractor may be entitled to rely. Contractor agrees that except for the information so identified, Contractor does not and shall not rely on any other information contained in such reports and drawings.

5.3 Contractor has conducted or obtained and has understood all such examinations, investigations, explorations, tests, reports and studies (in addition to or to supplement those referred to in Section 5.2 of this Document 00520) that pertain to the subsurface conditions, as-built conditions, Underground Facilities and all other physical conditions at or contiguous to the Site or otherwise that may affect the cost, progress, performance or furnishing of Work, as Contractor

considers necessary for the performance or furnishing of Work at the Contract Sum, within the Contract Time and in accordance with the other terms and conditions of the Contract Documents, including specifically the provisions of Document 00700 (General Conditions); and no additional examinations, investigations, explorations, tests, reports, studies or similar information or data are or will be required by Contractor for such purposes.

5.4 Contractor has correlated its knowledge and the results of all such observations, examinations, investigations, explorations, tests, reports and studies with the terms and conditions of the Contract Documents.

5.5 Contractor has given Owner prompt written notice of all conflicts, errors, ambiguities, or discrepancies that it has discovered in or among the Contract Documents and as-built drawings and actual conditions and the written resolution thereof through Addenda issued by Owner is acceptable to Contractor.

5.6 Contractor is duly organized, existing and in good standing under applicable state law, and is duly qualified to conduct business in the State of California.

5.7 Contractor has duly authorized the execution, delivery and performance of this Agreement, the other Contract Documents and the Work to be performed herein. The Contract Documents do not violate or create a default under any instrument, agreement, order or decree binding on Contractor.

5.8 Contractor has listed the following Subcontractors pursuant to the Subcontractor Listing Law, California Public Contract Code §4100 *et seq.*:

Name of Subcontractor and Location of Mill or Shop	Description of Work: Reference To Bid Items	Subcontractor's License No.

5.9 Contractor has designated _____ [name], _____, [title] to act as Contractor's Representative(s), who will represent Contractor in performing Contractor's duties and responsibilities and exercising Contractor's rights and authorities in Contract Documents. Contractor may change the individual(s) acting as Contractor's Representative(s), or delegate one or more specific functions to one or more specific Contractor's Representatives, at any time with written notice and without liability to Owner, but Contractor is limited to two representatives.

Article 6. Contract Documents

6.1 Contract Documents consist of the following documents, including all changes, Addenda, and Modifications thereto:

Document 00510	Notice of Award
Document 00520	Agreement
Document 00550	Notice to Proceed
Document 00611	Construction Performance Bond
Document 00612	Construction Labor and Material Payment Bond
Document 00630	Guaranty
Document 00650	Agreement and Release of Any and All Claims
Document 00660	Substitution Request Form
Document 00670	Escrow Bid Documents
Document 00680	Escrow Agreement for Security Deposit in Lieu of Retention
Document 00700	General Conditions
Document 00800	Supplementary Conditions
Document 00910	Addenda
Specifications	Divisions 1 through 16

Drawings listed in Drawing No. G-1, except Reference Drawings R-1 through R-3, which are not Contract Documents

6.2 There are no Contract Documents other than those listed in this Document 00520, Article 6. Document 00320 (Geotechnical Data and Existing Conditions), and the information supplied through this document, is not a Contract Document. The Contract Documents may only be amended, modified or supplemented as provided in Document 00700 (General Conditions).

Article 7. Miscellaneous

7.1 Terms and abbreviations used in this Agreement are defined in Document 00700 (General Conditions) and Section 01420 (References and Definitions) and will have the meaning indicated therein.

7.2 It is understood and agreed that in no instance are the persons signing this Agreement for or on behalf of Owner or acting as an employee, agent, or representative of Owner, liable on this Agreement or any of the Contract Documents, or upon any warranty of authority, or otherwise, and it is further understood and agreed that liability of the Owner is limited and confined to such liability as authorized or imposed by the Contract Documents or applicable law.

7.3 Contractor shall not assign any portion of the Contract Documents, and may subcontract portions of the Contract Documents only in compliance with the Subcontractor Listing Law, California Public Contract Code §4100 *et seq*. This Contract shall not be assigned or transferred without approval of Owner's Board of Directors. Any such assignment or transfer without approval of Owner's Board of Directors shall be void and of no force and effect.

7.4 The Contract Sum includes all allowances (if any).

7.5 In entering into a public works contract or a subcontract to supply goods, services or materials pursuant to a public works contract, Contractor or Subcontractor offers and agrees to assign to

the awarding body all rights, title and interest in and to all causes of action it may have under Section 4 of the Clayton Act (15 U.S.C. §15) or under the Cartwright Act (Chapter 2 (commencing with Section 16700) of Part 2 of Division 7 of the Business and Professions Code), arising from purchases of goods, services or materials pursuant to the public works contract or the subcontract. This assignment shall be made and become effective at the time Owner tenders final payment to Contractor, without further acknowledgment by the parties.

7.6 Copies of the general prevailing rates of per diem wages for each craft, classification, or type of worker needed to execute the Contract, as determined by Director of the State of California Department of Industrial Relations, are deemed included in the Contract Documents and on file at Owner's Office, and shall be made available to any interested party on request. Pursuant to Section 1861 of the Labor Code, Contractor represents that it is aware of the provisions of Section 3700 of the Labor Code which require every employer to be insured against liability for workers' compensation or to undertake self-insurance in accordance with the provisions of that Code, and Contractor shall comply with such provisions before commencing the performance of the Work of the Contract Documents.

7.7 Should any part, term or provision of this Agreement or any of the Contract Documents, or any document required herein or therein to be executed or delivered, be declared invalid, void or unenforceable, all remaining parts, terms and provisions shall remain in full force and effect and shall in no way be invalidated, impaired or affected thereby. If the provisions of any law causing such invalidity, illegality or unenforceability may be waived, they are hereby waived to the end that this Agreement and the Contract Documents may be deemed valid and binding agreements, enforceable in accordance with their terms to the greatest extent permitted by applicable law. In the event any provision not otherwise included in the Contract Documents is required to be included by any applicable law, that provision is deemed included herein by this reference (or, if such provision is required to be included in any particular portion of the Contract Documents, that provision is deemed included in that portion).

7.8 This Agreement and the Contract Documents shall be deemed to have been entered into in the County of Sonoma, State of California, and governed in all respects by California law (excluding choice of law rules). The exclusive venue for all disputes or litigation hereunder shall be in Sonoma County.

7.9 Contractor accepts the claims procedure established by Article 12 of Document 00700 (General Conditions), as established under Section 930.2 et seq. of the California Government Code.

/

/

/

/

/

/

IN WITNESS WHEREOF the parties have executed this Agreement in quadruplicate the day and year first above written.

Reviewed as to substance by Owner:

_____
Grant Davis, Water Agency's General Manager

Reviewed as to funds by Owner:

_____
Division Manager - Administrative Services

Reviewed as to form by County Counsel:

_____
County Counsel

Certificates of Insurance and Guaranty are on file with and reviewed as to substance for Owner by:

_____
Contract Administration/Inspection Date

Attest:

_____
Clerk of the Board of Directors

CONTRACTOR:

_____
[Contractor's name]

By: _____
[Signature]

_____
[Please print name here]

Title: _____
[If Corporation: Chairman, President, or Vice President]

By: _____
[Signature]

_____
[Please print name here]

Title: _____
[If Corporation: Secretary, Assistant Secretary, Chief Financial Officer, or Assistant Treasurer]

OWNER:

SONOMA COUNTY WATER AGENCY, a Public Agency of the State of California

By: _____
Chair, Board of Directors

END OF DOCUMENT

DOCUMENT 00550

NOTICE TO PROCEED

Dated: _____, 20__

To: _____

_____
(Contractor)

Address: _____

_____

CONTRACT FOR: CONTRACT NUMBER 0-80-7 #1A
404 AVIATION BOULEVARD ROOF REPLACEMENT

You are notified that the Contract Time under the above Contract will commence to run on _____ 20___. On that date, you are to start performing your obligations with respect to Work under the Contract Documents. In accordance with Article 3 of Document 00520 (Agreement), the dates of Substantial Completion and Final Completion for the entire Work are _____, 20___ and _____, 20___, respectively.

In accordance with Article 11 of Document 00700 (General Conditions), on _____[date] you must submit preliminary schedules (Initial Schedule, Schedule of Submittals, and Schedule of Values).

In accordance with Section 01315 (Project Meetings), on _____ [date] you must attend a Schedule Review Meeting.

Before you may start any Work at the Site, you must:

_____

From this date forward, submit one electronic copy and at least one hard copy of all Project documents, unless otherwise required by the Contract Documents. Submit electronic copies to: [email address].

Upon commencement of the Work, you and each of your Subcontractors shall certify and provide Owner copies of payroll records on forms provided by the Division of Labor Standards Enforcement, in accordance with Section 1776 of the California Labor Code.

SONOMA COUNTY WATER AGENCY,
A Public Agency of the State of California

By : _____

Its: _____

[Notice to be sent in manner required by Contract Documents]

END OF DOCUMENT

DOCUMENT 00611

CONSTRUCTION PERFORMANCE BOND
STANDARD EDITION

THIS CONSTRUCTION PERFORMANCE BOND ("Bond") dated _____, is in the penal sum of _____
_____
[which is one hundred percent of the Contract Sum], and is entered into by and between the parties listed below to ensure the faithful performance of the Construction Contract listed below. This Bond consists of this page and the Bond Terms and Conditions, paragraphs 1 through 12, attached to this page. Any singular reference to _____ [insert name of Contractor] ("Contractor"), _____ [insert name of Surety] ("Surety"), Sonoma County Water Agency, a public agency of the State of California ("Owner") or other party shall be considered plural where applicable.

CONTRACTOR:	SURETY:
_____	_____
Name	Name
_____	_____
Address	Principal Place of Business
_____	_____
City/State/Zip	City/State/Zip

CONSTRUCTION CONTRACT:

404 AVIATION BOULEVARD ROOF REPLACEMENT
CONTRACT NUMBER 0-80-7 #1A

at Sonoma County, California

Signed_____, 20____ in the Amount of $_____ (the "Penal Sum")

CONTRACTOR AS PRINCIPAL	SURETY
Company: (Corp. Seal)	Company: (Corp. Seal)
Signature:_____	Signature: _____
Name and Title:_____	Name and Title:_____
_____	_____

BOND TERMS AND CONDITIONS

1. Contractor and Surety, jointly and severally, bind themselves, their heirs, executors, administrators, successors and assigns to Owner for the complete and proper performance of the Construction Contract, which is incorporated herein by reference.

2. If Contractor completely and properly performs all of its obligations under the Construction Contract, Surety and Contractor shall have no obligation under this Bond.

3. If there is no Owner Default, Surety's obligation under this Bond shall arise after:

   3.1 Owner has declared a Contractor Default under the Construction Contract pursuant to the terms of the Construction Contract; and

   3.2 Owner has agreed to pay the Balance of the Contract Sum:

      3.2.1 To Surety in accordance with the terms of this Bond and the Construction Contract; or

      3.2.2 To a contractor selected to perform the Construction Contract in accordance with the terms of this Bond and the Construction Contract.

4. When Owner has satisfied the conditions of paragraph 3, Surety shall promptly (within 30 Days) and at Surety's expense elect to take one of the following actions:

   4.1 Arrange for Contractor, with consent of Owner, to perform and complete the Construction Contract (but Owner may withhold consent, in which case the Surety must elect an option described in paragraphs 4.2, 4.3 or 4.4, below); or

   4.2 Undertake to perform and complete the Construction Contract itself, through its agents or through independent contractors; provided, that Surety may not select Contractor as its agent or independent contractor without Owner's consent; or

   4.3 Undertake to perform and complete the Construction Contract by obtaining bids from qualified contractors acceptable to Owner for a contract for performance and completion of the Construction Contract and, upon determination by Owner of the lowest responsive and responsible Bidder, arrange for a contract to be prepared for execution by Owner and the contractor selected with Owner's concurrence, to be secured with performance and payment bonds executed by a qualified surety equivalent to the bonds issued on the Construction Contract; and, if Surety's obligations defined in paragraph 6, below, exceed the Balance of the Contract Sum, then Surety shall pay to Owner the amount of such excess; or

   4.4 Waive its right to perform and complete, arrange for completion, or obtain a new contractor and with reasonable promptness under the circumstances and, after investigation and consultation with Owner, determine in good faith its monetary obligation to Owner under paragraph 6, below, for the performance and completion of the Construction Contract and, as soon as practicable after the amount is determined,

tender payment therefor to Owner with full explanation of the payment's calculation. If Owner accepts Surety's tender under this paragraph 4.4, Owner may still hold Surety liable for future damages then unknown or unliquidated resulting from the Contractor Default. If Owner disputes the amount of Surety's tender under this paragraph 4.4, Owner may exercise all remedies available to it at law to enforce Surety's liability under paragraph 6, below.

5. If Surety does not proceed as provided in paragraph 4, above, then Surety shall be deemed to be in default on this Bond ten Days after receipt of an additional written notice from Owner to Surety demanding that Surety perform its obligations under this Bond. At all times Owner shall be entitled to enforce any remedy available to Owner at law or under the Construction Contract including, without limitation, and by way of example only, rights to perform work, protect Work, mitigate damages, advance critical Work to mitigate schedule delay, or coordinate Work with other consultants or contractors.

6. Surety's monetary obligation under this Bond is limited by the amount of this Bond identified herein as the Penal Sum. This monetary obligation shall augment the Balance of the Contract Sum. Subject to these limits, Surety's obligations under this Bond are commensurate with the obligations of Contractor under the Construction Contract. Surety's obligations shall include, but are not limited to:

   6.1 The responsibilities of Contractor under the Construction Contract for completion of the Construction Contract and correction of Defective Work;

   6.2 The responsibilities of Contractor under the Construction Contract to pay liquidated damages, and for damages for which no liquidated damages are specified in the Construction Contract, actual damages caused by non-performance of the Construction Contract including, but not limited to, all valid and proper backcharges, offsets, payments, indemnities, or other damages;

   6.3 Additional legal, design professional and delay costs resulting from Contractor Default or resulting from the actions or failure to act of the Surety under paragraph 4, above (but excluding attorney's fees incurred to enforce this Bond).

7. No right of action shall accrue on this Bond to any person or entity other than Owner or its successors or assigns.

8. Surety hereby waives notice of any change, alteration or addition to the Construction Contract or to related subcontracts, purchase orders and other obligations, including changes of time. Surety consents to all terms of the Construction Contract, including provisions on changes to the Contract. No extension of time, change, alteration, Modification, deletion, or addition to the Contract Documents, or of the Work required thereunder, shall release or exonerate Surety on this Bond or in any way affect the obligations of Surety on this Bond.

9. Any proceeding, legal or equitable, under this Bond shall be instituted in any court of competent jurisdiction where a proceeding is pending between Owner and Contractor regarding the Construction Contract, or in the courts of the County of Sonoma, or in a court of competent jurisdiction in the location in which the Work is located. Communications from

Owner to Surety under paragraph 3.1 of this Bond shall be deemed to include the necessary agreements under paragraph 3.2 of this Bond unless expressly stated otherwise.

10. All notices to Surety or Contractor shall be mailed or delivered (at the address set forth on the signature page of this Bond), and all notices to Owner shall be mailed or delivered as provided in Document 00520 (Agreement). Actual receipt of notice by Surety, Owner or Contractor, however accomplished, shall be sufficient compliance as of the date received at the foregoing addresses.

11. Any provision in this Bond conflicting with any statutory or regulatory requirement shall be deemed deleted herefrom and provisions conforming to such statutory requirement shall be deemed incorporated herein.

12. Definitions.

    12.1 Balance of the Contract Sum: The total amount payable by Owner to Contractor pursuant to the terms of the Construction Contract after all proper adjustments have been made under the Construction Contract, for example, deductions for progress payments made, and increases/decreases for approved Modifications to the Construction Contract.

    12.2 Construction Contract: The agreement between Owner and Contractor identified on the signature page of this Bond, including all Contract Documents and changes thereto.

    12.3 Contractor Default: Material failure of Contractor, which has neither been remedied nor waived, to perform or otherwise to comply with the terms of the Construction Contract including, but not limited to, "default" or any other condition allowing a termination for cause as provided in Document 00700 (General Conditions).

    12.4 Owner Default: Material failure of Owner, which has neither been remedied nor waived, to pay Contractor progress payments due under the Construction Contract or to perform other material terms of the Construction Contract, if such failure is the cause of the asserted Contractor Default and is sufficient to justify Contractor termination of the Construction Contract.

END OF DOCUMENT

DOCUMENT 00612

CONSTRUCTION LABOR AND MATERIAL PAYMENT BOND
STANDARD EDITION

THIS CONSTRUCTION LABOR AND MATERIAL PAYMENT BOND ("Bond") is dated _____, is in the penal sum of _____
_____
[one hundred percent of the Contract Sum, and is entered into by and between the parties listed below to ensure the payment of claimants under the Construction Contract listed below. This Bond consists of this page and the Bond Terms and Conditions, paragraphs 1 through 13, attached to this page. Any singular reference to _____ [insert name of Contractor] ("Contractor"), _____ [insert name of Surety] ("Surety"), the Sonoma County Water Agency, a public agency of the State of California ("Owner") or other party shall be considered plural where applicable.

CONTRACTOR:	SURETY:
_____	_____
Name	Name
_____	_____
Address	Principal Place of Business
_____	_____
City/State/Zip	City/State/Zip

CONSTRUCTION CONTRACT:

404 AVIATION BOULEVARD ROOF REPLACEMENT
CONTRACT NUMBER 0-80-7 #1A

at Sonoma County, California

Signed _____, 20____ in the Amount of $_____(the "Penal Sum")

CONTRACTOR AS PRINCIPAL	SURETY
Company: (Corp. Seal)	Company: (Corp. Seal)
Signature:_____	Signature: _____
Name and Title:_____	Name and Title:_____
_____	_____

BOND TERMS AND CONDITIONS

1. Contractor and Surety, jointly and severally, bind themselves, their heirs, executors, administrators, successors and assigns to Owner and to Claimants, to pay for labor, materials and equipment furnished for use in the performance of the Construction Contract, which is incorporated herein by reference.

2. With respect to Owner, this obligation shall be null and void if Contractor:

   2.1 Promptly makes payment, directly or indirectly, for all sums due Claimants; and

   2.2 Defends, indemnifies and holds harmless Owner from all claims, demands, liens or suits by any person or entity who furnished labor, materials or equipment for use in the performance of the Construction Contract, provided Owner has promptly notified Contractor and Surety (at the address set forth on the signature page of this Bond) of any claims, demands, liens or suits and tendered defense of such claims, demands, liens or suits to Contractor and Surety, and provided there is no Owner Default.

3. With respect to Claimants, this obligation shall be null and void if Contractor promptly makes payment, directly or indirectly through its Subcontractors, for all sums due Claimants. If Contractor or its Subcontractors, however, fail to pay any of the persons named in Section 9100 of the California Civil Code, or amounts due under the Unemployment Insurance Code with respect to Work or labor performed under the Contract, or for any amounts required to be deducted, withheld, and paid over to the Employment Development Department from the wages of employees of Contractor or Subcontractors pursuant to Section 13020 of the Unemployment Insurance Code, with respect to such Work and labor, then Surety shall pay for the same, and also, in case suit is brought upon this Bond, a reasonable attorney's fee, to be fixed by the court.

4. Consistent with the California Mechanic's Lien Law, Civil Code §8000, *et seq*., Surety shall have no obligation to Claimants under this Bond unless the Claimant has satisfied all applicable notice requirements.

5. Surety's total obligation shall not exceed the amount of this Bond, and the amount of this Bond shall be credited for any payments made in good faith by Surety under this Bond.

6. Amounts due Contractor under the Construction Contract shall be applied first to satisfy claims, if any, under any Construction Performance Bond and second, to satisfy obligations of Contractor and Surety under this Bond.

7. Owner shall not be liable for payment of any costs, expenses, or attorney's fees of any Claimant under this Bond, and shall have under this Bond no obligations to make payments to, give notices on behalf of, or otherwise have obligations to Claimants under this Bond.

8. Surety hereby waives notice of any change, including changes of time, to the Construction Contract or to related subcontracts, purchase orders and other obligations. Surety further hereby stipulates and agrees that no change, extension of time, alteration or addition to the terms of the Construction Contract, or to the Work to be performed thereunder, or materials or

equipment to be furnished thereunder or the Specifications accompanying the same, shall in any way affect its obligations under this Bond, and it does hereby waive any requirement of notice or any such change, extension of time, alteration or addition to the terms of the Construction Contract or to the Work or to the Specifications or any other changes.

9. Suit against Surety on this Bond may be brought by any Claimant, or its assigns, at any time after the Claimant has furnished the last of the labor or materials, or both, but, per Civil Code §9558, must be commenced before the expiration of six months after the period in which stop notices may be filed as provided in Civil Code §9356.

10. All notices to Surety or Contractor shall be mailed or delivered (at the address set forth on the signature page of this Bond), and all notices to Owner shall be mailed or delivered as provided in Document 00520 (Agreement). Actual receipt of notice by Surety, Owner or Contractor, however accomplished, shall be sufficient compliance as of the date received at the foregoing addresses.

11. This Bond has been furnished to comply with the California Mechanic's Lien Law including, but not limited to, Civil Code §§9550, 9554, *et seq*. Any provision in this Bond conflicting with said statutory requirements shall be deemed deleted herefrom and provisions conforming to such statutory or other legal requirements shall be deemed incorporated herein. The intent is that this Bond shall be construed as a statutory bond and not as a common law bond.

12. Upon request by any person or entity appearing to be a potential beneficiary of this Bond, Contractor shall promptly furnish a copy of this Bond or shall permit a copy to be made.

13. Definitions.

    13.1.1 Claimant: An individual or entity having a direct contract with Contractor or with a Subcontractor of Contractor to furnish labor, materials or equipment for use in the performance of the Contract, as further defined in California Civil Code §9100. The intent of this Bond shall be to include without limitation in the terms "labor, materials or equipment" that part of water, gas, power, light, heat, oil, gasoline, telephone service or rental equipment used in the Construction Contract, architectural and engineering services required for performance of the Work of Contractor and Contractor's Subcontractors, and all other items for which a stop notice might be asserted. The term Claimant shall also include the Unemployment Development Department as referred to in Civil Code §9554(b).

    13.1.2 Construction Contract: The agreement between Owner and Contractor identified on the signature page of this Bond, including all Contract Documents and changes thereto.

    13.1.3 Owner Default: Material failure of Owner, which has neither been remedied nor waived, to pay the Contractor as required by the Construction Contract, provided that failure is the cause of the failure of Contractor to pay the Claimants and is sufficient to justify termination of the Construction Contract.

END OF DOCUMENT

DOCUMENT 00630

GUARANTY

To the SONOMA COUNTY WATER AGENCY, for construction of

404 AVIATION BOULEVARD ROOF REPLACEMENT

_____ Santa Rosa, California

The undersigned guarantees all construction performed on this Project and also guarantees all material and equipment incorporated therein.

Contractor hereby grants to Owner for a period of two years following the date of Final Acceptance of the Work completed, or such longer period of time as may be prescribed by laws and regulations, or by the terms of the Contract Documents (the "Guaranty Period"), its unconditional warranty of the quality and adequacy of all of the Work including, without limitation, all labor, materials and equipment provided by Contractor and its Subcontractors of all tiers in connection with the Work. Without limiting the generality of the forgoing warranties, if the performance of materials or equipment involves or affects water-tightness (above grade or below grade) or any type of moisture intrusion, Contractor shall act as co-guarantor of such materials and equipment for either the term of the Extended Warranty pursuant to Document 00700 (General Conditions) for such materials or equipment or 3 years, whichever is shorter.

Neither final payment nor use or occupancy of the Work performed by the Contractor shall constitute an acceptance of Work not done in accordance with this Guaranty or relieve Contractor of liability in respect to any express warranties or responsibilities for faulty materials or workmanship. Contractor shall remedy any defects in the Work and pay for any damage resulting therefrom, which shall appear within the Guaranty Period.

If within the Guaranty Period any Work is found to be Defective, Contractor shall promptly, without cost to Owner and in accordance with Owner's written instructions, correct such Defective Work. Contractor shall remove any Defective Work rejected by Owner and replace it with Work that is not Defective, and satisfactorily correct or remove and replace any damage to other Work or the work of others resulting therefrom. If Contractor fails to promptly comply with the terms of such instructions, or in an emergency where delay would cause serious risk of loss or damage, Owner may have the Defective Work corrected or the rejected Work removed and replaced. Contractor shall pay for all claims, costs, losses and damages caused by or resulting from such removal and replacement. Where Contractor fails to correct Defective Work, or defects are discovered outside the correction period, Owner shall have all rights and remedies granted by law.

Inspection of the Work shall not relieve Contractor of any of its obligations under the Contract Documents. Even though equipment, materials, or Work required to be provided under the Contract Documents have been inspected, accepted, and estimated for payment, Contractor shall, at its own expense, replace or repair any such equipment, material, or Work found to be Defective or otherwise not to comply with the requirements of the Contract Documents up to the end of the guaranty period.

All abbreviations and definitions of terms used in this Agreement shall have the meanings set forth in the Contract Documents, including, without means of limitation, Document 00700 (General Conditions) and Section 01420 (References and Definitions).

The foregoing Guaranty is in addition to any other warranties of Contractor contained in the Contract Documents, and not in lieu of, any and all other liability imposed on Contractor under the Contract Documents and at law with respect to Contractor's duties, obligations, and performance under the Contract Documents. In the event of any conflict or inconsistency between the terms of this Guaranty and any warranty or obligation of the Contractor under the Contract Documents or at law, such inconsistency or conflict shall be resolved in favor of the higher level of obligation of the Contractor.

_____
[Contractor's name]

By: _____
[Signature]

_____
[Please print name here]

Title: _____

Business Address:_____
_____
_____

Date: _____

END OF DOCUMENT

DOCUMENT 00650

AGREEMENT AND RELEASE OF ANY AND ALL CLAIMS

THIS AGREEMENT AND RELEASE OF ANY AND ALL CLAIMS ("Agreement and Release"), made and entered into this _____ [date] day of _____ [month], _____ [year], by and between the Sonoma County Water Agency, a public agency of the State of California ("Owner"), and _____ [name of Contractor] ("Contractor"), whose place of business is at _____ _____ [address of Contractor].

RECITALS

A. Owner and Contractor entered into Contract Number 0-80-7 #1A (the "Contract").

B. The Work under the Contract has been completed.

Now, therefore, it is mutually agreed between Owner and Contractor as follows:

AGREEMENT

1. Contractor will not be assessed liquidated damages except as detailed below:

Original Contract Sum	$ _____
Modified Contract Sum	$ _____
Payment to Date	$ _____
Liquidated Damages	$ _____
Service Reduction Damages	$ _____
Payment Due Contractor	$ _____

2. Subject to the provisions of this Agreement and Release, Owner will forthwith pay to Contractor the sum of $_____ Dollars and _____ Cents ($_____) under the Contract, less any amounts withheld under the Contract or represented by any Notice to Withhold Funds on file with Owner as of the date of such payment.

3. Contractor acknowledges and hereby agrees that there are no unresolved or outstanding claims in dispute against Owner arising from the Contract, except for the claims described in paragraph 4 of this Document 00650. It is the intention of the parties in executing this Agreement and Release that this Agreement and Release shall be effective as a full, final and general release of all claims, demands, actions, causes of action, obligations, costs, expenses, damages, losses and liabilities of Contractor against Owner, and all of its agents, employees,

consultants, inspectors, representatives, assignees and transferees, except for the Disputed Claims set forth in paragraph 4 of this Document 00650. Nothing in this Agreement and Release shall limit or modify Contractor's continuing obligations described in paragraph 6 of this Document 00650.

4. The following claims submitted under Document 00700 (General Conditions), Article 12, are disputed (hereinafter, the "Disputed Claims") and are specifically excluded from the operation of this Agreement and Release:

Claim No.	Date Submitted	Description of Claim	Amount of Claim

[Insert information, including attachment if necessary]

5. Consistent with California Public Contract Code Section 7100, Contractor hereby agrees that, in consideration of the payment set forth in paragraph 2 of this Document 00650, Contractor hereby releases and forever discharges Owner, and all of its agents, employees, consultants, inspectors, assignees and transferees from any and all liability, claims, demands, actions or causes of action of whatever kind or nature arising out of or in any way concerned with the Work under the Contract.

6. Guarantees and warranties for the Work, and any other continuing obligation of Contractor, shall remain in full force and effect as specified in the Contract Documents.

7. Contractor shall immediately defend, indemnify and hold harmless Owner, any Owner's Representatives, Engineer, and all of their agents, employees, consultants, inspectors, assignees and transferees, from any and all claims, demands, actions, causes of action, obligations, costs, expenses, damages, losses and liabilities that may be asserted against them by any of Contractor's suppliers and/or Subcontractors of any tier and/or any suppliers to them for any and all labor, materials, supplies and equipment used, or contemplated to be used in the performance of the Contract, except for the Disputed Claims set forth in paragraph 4 of this Document 00650.

8. Contractor hereby waives the provisions of California Civil Code Section 1542, which provide as follows:

> A general release does not extend to claims which the creditor does not know or suspect to exist in his favor at the time of executing the release, which if known by him, must have materially affected his settlement with the debtor.

9. The provisions of this Agreement and Release are contractual in nature and not mere recitals and shall be considered independent and severable, and if any such provision or any part thereof shall be at any time held invalid in whole or in part under any federal, state, county, municipal or other law, ruling, or regulation, then such provision, or part thereof shall remain

in force and effect only to the extent permitted by law, and the remaining provisions of this Agreement and Release shall also remain in full force and effect, and shall be enforceable.

10. Contractor represents and warrants that it is the true and lawful owner of all claims and other matters released pursuant to this Agreement and Release, and that it has full right, title and authority to enter into this instrument. Each party represents and warrants that it has been represented by counsel of its own choosing in connection with this Agreement and Release.

11. All rights of Owner shall survive completion of the Work or termination of the Contract, and execution of this Agreement and Release.

* * * CAUTION: THIS IS A RELEASE - READ BEFORE EXECUTING * * *

SONOMA COUNTY WATER AGENCY,
A Public Agency of the State of California

By: _____

Its: _____

[CONTRACTOR]

By: _____

Name: _____

Its: _____
(President, Vice President, General Manager)

REVIEWED AS TO FORM:

_____
County Counsel

_____, 20 _____

END OF DOCUMENT

DOCUMENT 00660

SUBSTITUTION REQUEST FORM

During Bid Period To:	After Award of Contract To:
Jim Flugum Sonoma County Water Agency Fax: 707-544-6123	Construction Management Section Sonoma County Water Agency Fax: 707-544-6123

Project: 404 Aviation Boulevard Roof Replacement

Bidder: _____

Subcontractor/Supplier: _____

Drawing Sheet Reference/Detail No: _____

The undersigned Bidder submits for consideration the following equipment instead of the specified item for the above Project:

Section	Paragraph	Specified Item
_____	_____	_____
_____	_____	_____

Proposed Substitution: _____

_____

The undersigned encloses the information required herein. If this Document 00660 is being submitted by a Bidder wishing to use "equal" item(s) as provided in Document 00200 (Instructions to Bidders), the undersigned Bidder must also enclose the technical information (other than cost) otherwise required for a post-Award of Contract Request for Substitution ("RFS") under Section 01600 (Product Requirements). However, if this Document 00660 is being submitted under provisions of Contract Documents after Award of Contract, the undersigned Contractor must include all information required under Section 01600 (Product Requirements).

The undersigned has (a) attached manufacturer's literature, including complete technical data and laboratory test results, if applicable, (b) attached an explanation of why proposed substitution is a true equivalent to specified item, (c) included complete information on changes to Contract Documents that the proposed substitution will require for its proper installation, and (d) filled in the blanks below:

A. Does the substitution affect dimensions shown on Drawings? (If yes, please explain)

_____

B. Are the manufacturer's guarantees and warranties on the proposed substitution items identical to those on the specified items? If there are differences, please specify each and every difference in detail.

_____

C. What effect does the substitution have on other contractors, trades, or suppliers?

_____

D. What are the differences between the proposed substitution and the specified item? If proposed substitution has a color or pattern, provide a color board showing proposed substitution in relation to the other adjacent colors and patterns.

_____

E. Will granting the requested substitution cause any schedule delay? (If yes, please explain)

_____

The undersigned Bidder certifies that the function, appearance, and quality of the proposed substitution are equivalent or superior to those of the specified item.

Submitted by:

_____
Bidder

_____
Signature

_____
Name

_____
Address

_____
City/State/Zip

Telephone: _____

Date: _____

For Use by Owner:

___ Accepted _____Accepted as Noted

___ Not Accepted _____Received Too Late

By: _____
Owner's Representative

Date: _____

Remarks: _____

_____

_____

_____

END OF DOCUMENT

DOCUMENT 00670

ESCROW BID DOCUMENTS

1. Requirements for Escrow Bid Documents.

   a. Within the time period established in Document 00200 (Instructions to Bidders), Contractor shall submit to Owner a set of Escrow Bid Documents as defined in paragraph 2 below. Escrow Bid Documents will be used only in the manner and for the purposes described in this Document 00670.

   b. The submission of the Escrow Bid Documents, as with the bonds and insurance documents required under Document 00200 (Instructions to Bidders), is considered an essential part of the Contract award. Should Contractor fail to make the submission within the allowed time specified, Contractor may be deemed to have failed to enter into the Contract, Contractor shall forfeit the amount of its Bid security accompanying Contractor's Bid, and Owner may award the Contract to the next lowest responsive responsible Bidder.

   c. NO PAYMENTS WILL BE MADE, NOR WILL OWNER ACCEPT CHANGE ORDER REQUESTS UNTIL THE ABOVE-REQUIRED INFORMATION IS SUBMITTED AND APPROVED. ALTERNATIVELY, OWNER MAY DECLARE THE BID NON-RESPONSIVE.

   d. Contractor shall submit the Escrow Bid Documents, in person by an authorized representative of the Contractor, to:

      Construction Management Section
      Sonoma County Water Agency
      404 Aviation Boulevard
      Santa Rosa, California

2. Scope of Escrow Bid Documents.

   a. Within the time period specified in Document 00200 (Instructions to Bidders), Contractor shall submit one copy of all documentary information received or generated by Contractor in preparation of Bid prices for the Contract Documents, as specified in paragraphs 5 and 6 of this Document 00670. This material is referred to in this Document 00670 as the "Escrow Bid Documents." Contractor's Escrow Bid Documents will be held in escrow as provided in this Document 00670.

   b. Contractor represents and agrees, as a condition of award of the Contract, that the Escrow Bid Documents constitute all written information used in the preparation of its Bid, and that no other written Bid preparation information shall be considered in resolving disputes or claims or may be considered in legal proceedings. Contractor also agrees that nothing in the Escrow Bid Documents shall change or modify the terms or conditions of the Contract Documents. Contractor is advised that the Escrow Bid Documents will only be used as a guide in the resolution of disputes and claims.

3. Ownership of Escrow Bid Documents.

   a. The Escrow Bid Documents are, and shall always remain, the property of Contractor, subject to joint review by Owner and Contractor, as provided in this Document 00670.

   b. Owner stipulates and expressly acknowledges that the Escrow Bid Documents constitute trade secrets. This acknowledgement is based on Owner's express understanding that the information contained in the Escrow Bid Documents is not known outside Contractor's business, is known only to a limited extent and only by a limited number of Contractor's Employees, is safeguarded while in Contractor's possession, is extremely valuable to Contractor and could be extremely valuable to Contractor's competitors by virtue of it reflecting Contractor's contemplated construction techniques. Owner further acknowledges that the Escrow Bid Documents and the information contained in them are made available to Owner only because such action is an express pre-requisite to award of the Contract. Owner agrees to safeguard the Escrow Bid Documents, and all information contained in them, against disclosure to the fullest extent permitted by law, consistent with paragraph 4 of this Document 00670.

4. Escrow Bid Documents may be used in the determination of price adjustments and Change Orders and in the settlement of disputes and claims. If used in legal proceedings, Escrow Bid Documents shall be subject to an appropriate protective order limiting their disclosure.

5. Format and Contents of Escrow Bid Documents.

   a. Contractor may submit Escrow Bid Documents in their usual cost-estimating format; a standard format is not required. Contractor shall prepare and submit the Escrow Bid Documents in English.

   b. Owner requires Contractor to itemize clearly in the Escrow Bid Documents the estimated costs of performing the Work of each Bid item contained in Contractor's Bid. Contractor shall separate Bid items into sub-items as required to present a detailed cost estimate and allow a detailed cost review. The Escrow Bid Documents shall include all Subcontractor bids or quotes, supplier bids or quotes, quantity take-offs, crews, equipment, calculations of rates of production and progress, copies of quotes from Subcontractors and suppliers, and memoranda, narratives, add/deduct sheets, and all other information used by Contractor to arrive at the prices contained in the Bid. Escrow Bid Documents shall include costs of scheduled maintenance, depreciation, fleet rental expense discounts and incentives, and similar cost adjustments if used by Contractor to calculate its Bid prices. Estimated costs shall be broken down into Contractor's usual estimate categories such as direct labor, repair labor, equipment ownership and operation, expendable materials, permanent materials and subcontract costs as appropriate. Plant and equipment and indirect costs should be detailed in Contractor's usual format. Contractor shall identify its allocation of indirect costs, contingencies, markup and other items to each Bid item.

   c. Contractor shall identify all costs. For Bid items amounting to less than $10,000, Contractor may estimate costs without a detailed cost estimate, provided that Contractor includes applicable labor, equipment, materials and subcontracts, and allocates applicable indirect costs, contingencies and markup.

d. Bid documents provided by Owner should not be included in the Escrow Bid Documents unless needed to comply with these requirements.

6. Submittal of Escrow Bid Documents.

a. Submit Escrow Bid Documents in a container clearly marked on the outside with Contractor's name, date of submittal, Project name and the words "Escrow Bid Documents - Open only in the presence of Authorized Representatives of both Owner and Contractor." Owner will review the Escrow Bid Documents for initial compliance. Owner has three Days after receipt of Bidder's Escrow Bid Documents to demand additional information.

b. By submitting Escrow Bid Documents, Contractor represents that the material in the Escrow Bid Documents constitutes all the documentary information used in preparation of the Bid and that Contractor has personally examined the contents of the Escrow Bid Documents container and has found that the documents in the container are complete. Contractor agrees that it will not introduce or rely on any other documents to prove how it prepared its Bid.

c. If Contractor's Bid is based upon subcontracting any part of the Work, each Subcontractor whose total subcontract price exceeds five percent of the total Contract Sum proposed by Contractor, shall provide separate Escrow Documents to be included with those of Contractor. Such documents shall be opened and examined in the same manner and at the same time as the examination described above for Contractor.

d. If Contractor wishes to subcontract any portion of the Work after award, Owner retains the right to require Contractor to submit Escrow Documents for the Subcontractor before approval of the subcontract.

7. Storage, Examination, and Final Disposition of Escrow Bid Documents.

a. The Escrow Bid Documents will be placed in escrow until Final Completion of Work on the Project, in a mutually agreeable institution. Contractor shall pay the cost of storage for the Escrow Bid Documents until that time. The storage facilities shall be the appropriate size for all the Escrow Bid Documents and located conveniently to both Owner's and, to the extent reasonably possible, Contractor's offices, but in no event outside the County of Sonoma.

b. Both Owner and Contractor shall examine the Escrow Bid Documents, at any time deemed necessary by either Owner or Contractor, to assist in the negotiation of price adjustments and Change Orders or the settlement of disputes and claims. Examination of the Escrow Bid Documents is subject to the following conditions:

i. As trade secrets, the Escrow Bid Documents are proprietary and confidential under paragraph 3.b. of this Document 00670.

ii. Owner and Contractor (and any Subcontractor, to the extent Escrow Bid Documents are required by a Subcontractor) shall each designate in writing to the other party(s) at least seven Days prior to any examination, representatives who are authorized to

examine the Escrow Bid Documents. Except as otherwise provided in a court order, no other persons shall have access to the Escrow Documents.

iii. Except as otherwise provided in a court order, access to the documents may take place only in the presence of duly designated representatives of both Owner and Contractor. If Contractor fails to designate a representative or appear for joint examination on seven Days' notice, then Owner's Representative may examine the Escrow Bid Documents upon an additional three Days' notice.

iv. Following Final Completion of Work on the Project and achievement of final settlement, Owner shall direct the escrow agent holding the Escrow Bid Documents in writing to return those documents to Contractor.

END OF DOCUMENT

DOCUMENT 00680

ESCROW AGREEMENT FOR SECURITY DEPOSITS IN LIEU OF RETENTION
P.C.C. §22300

THIS ESCROW AGREEMENT ("Escrow Agreement") is made and entered into this _____ [date] day of _____ [month], _____ [year], by and between the SONOMA COUNTY WATER AGENCY, a public agency of the State of California (hereinafter called the "Owner"), whose address is 404 Aviation Blvd., Santa Rosa, CA 95403-9019; _____ [name of Contractor] ("Contractor"), whose place of business is located at _____ [Contractor's Address]; and [Owner, as escrow agent …OR… _____ [Name of Bank], a state or federally chartered bank in the State of California, whose place of business is located at _____] ("Escrow Agent").

For the consideration hereinafter set forth, Owner, Contractor and Escrow Agent agree as follows:

1. Pursuant to Section 22300 of Public Contract Code of the State of California, Contractor has the option to deposit securities with Escrow Agent as a substitute for retention earnings required to be withheld by Owner pursuant to Contract Number 0-80-7 #1A entered into between Owner and Contractor for 404 Aviation Boulevard Roof Replacement in the amount of _____ [Contract Sum] dated _____ [Date of Contract] (the "Contract"). Alternatively, on written request of Contractor, Owner shall make payments of the retention earnings directly to Escrow Agent. When Contractor deposits the securities as a substitute for Contract earnings, Escrow Agent shall notify Owner within ten Days of the deposit. The market value of the securities at the time of substitution shall be at least equal to the cash amount then required to be withheld as retention under terms of Contract between Owner and Contractor. Securities shall be held in name of _____, and shall designate Contractor as the beneficial owner.

2. Owner shall make progress payments to Contractor for those funds which otherwise would be withheld from progress payments pursuant to Contract provisions, provided that Escrow Agent holds securities in form and amount specified in paragraph 1 of this Document 00680.

3. When Owner makes payment(s) of retention earned directly to Escrow Agent, Escrow Agent shall hold said payment(s) for the benefit of Contractor until the time that the escrow created under this Escrow Agreement is terminated. Contractor may direct the investment of the payments into securities. All terms and conditions of this Escrow Agreement and the rights and responsibilities of the parties shall be equally applicable and binding when Owner pays Escrow Agent directly.

4. Contractor shall be responsible for paying all fees for the expenses incurred by Escrow Agent in administering the Escrow Account, and all expenses of Owner. Such expenses and payment terms shall be determined by Owner, Contractor, and Escrow Agent.

5. Interest earned on securities or money market accounts held in escrow and all interest earned on that interest shall be for sole account of Contractor and shall be subject to withdrawal by Contractor at any time and from time to time without notice to Owner.

6. Contractor shall have the right to withdraw all or any part of the principal in the Escrow Account only by written notice to Escrow Agent accompanied by written authorization from Owner to Escrow Agent that Owner consents to withdrawal of amount sought to be withdrawn by Contractor.

7. Owner shall have the right to draw upon the securities in event of default by Contractor. Upon seven Days written notice to Escrow Agent from Owner of the default, Escrow Agent shall immediately convert the securities to cash and shall distribute the cash as instructed by Owner.

8. Upon receipt of written notification from Owner certifying that the Contract is final and complete, and that Contractor has complied with all requirements and procedures applicable to the Contract, Escrow Agent shall release to Contractor all securities and interest on deposit less escrow fees and charges of the Escrow Account. The escrow shall be closed immediately upon disbursement of all moneys and securities on deposit and payments of fees and charges.

9. Escrow Agent shall rely on written notifications from Owner and Contractor pursuant to paragraphs 5 through 8, inclusive, of this Document 00680 and Owner and Contractor shall hold Escrow Agent harmless from Escrow Agent's release and disbursement of securities and interest as set forth.

10. Names of persons who are authorized to give written notice or to receive written notice on behalf of Owner and on behalf of Contractor in connection with the foregoing, and exemplars of their respective signatures are as follows:

On behalf of Owner:

General Manager
Title
Grant Davis
Name

Signature
404 Aviation Boulevard
Address
Santa Rosa, CA 95403
City/State/Zip

On behalf of Contractor:

Title

Name

Signature

Address

City/State/Zip

On behalf of Escrow Agent:

Title

Name

Signature

Address

City/State/Zip

At the time the Escrow Account is opened, Owner and Contractor shall deliver to Escrow Agent a fully executed counterpart of this Document 00680.

/
/
/
/
/
/
/
/
/
/
/
/
/
/
/

IN WITNESS WHEREOF, the parties have executed this Escrow Agreement by their proper officers on the date first set forth above.

Owner

_____

_____
Title

_____
Name

_____
Signature

Contractor

_____

_____
Title

_____
Name

_____
Signature

Escrow Agent

_____

_____
Title

_____
Name

_____
Signature

REVIEWED AS TO FORM:

_____
County Counsel

_____
Date

END OF DOCUMENT

CONDITIONS OF THE CONTRACT

DOCUMENT 00700

GENERAL CONDITIONS

STANDARD EDITION

TABLE OF CONTENTS

1. GENERAL 1

1.1 Documents 1
1.2 Exercise Of Contract Responsibilities 1
1.3 Defined Terms 1

2. BIDDING 1

2.1 Investigation Prior To Bidding 1
2.2 Subcontractors 2

3. CONTRACT AWARD AND COMMENCEMENT OF THE WORK 3

3.1 Award Of Contract 3
3.2 Commencement Of Work 3

4. BONDS AND INSURANCE 3

4.1 Bonds 3
4.2 Insurance 3

5. DRAWINGS AND SPECIFICATIONS 3

5.1 Intent 3
5.2 Drawing Details 4
5.3 Interpretation Of Drawings And Specifications 4
5.4 Checking Of Drawings 5
5.5 Standards To Apply Where Specifications Are Not Furnished 5
5.6 Deviation from Specifications and Drawings 5
5.7 Precedence Of Documents 6
5.8 Ownership And Use Of Drawings, Specifications And Contract Documents 6

6. CONSTRUCTION BY OWNER OR BY SEPARATE CONTRACTORS 6

6.1 Owner's Right To Perform Construction And To Award Separate Contracts 6
6.2 Mutual Responsibility 6
6.3 Owner Authority Over Coordination 7

7. OWNER AND PAYMENT 8

7.1 Owner's Representative(s) 8
7.2 Means And Methods Of Construction 8
7.3 Receipt And Processing Of Applications For Payment 8

8. CONTROL OF THE WORK 8

8.1 Supervision Of Work By Contractor 8
8.2 Observation Of Work By Owner 9
8.3 Access To Work 9

8.4 Existing Utilities Shown or Indicated In Contract Documents 10
8.5 Protection of Underground Facilities When Digging Trenches Or During Excavation....11

9. WARRANTY, GUARANTY, AND INSPECTION OF WORK 12

9.1 Warranty And Guaranty 12
9.2 Inspection Of Work 13
9.3 Correction Of Defective Work 15
9.4 Acceptance And Correction Of Defective Work By Owner 16
9.5 Rights Upon Inspection, Correction, Or Acceptance 16
9.6 Proof Of Compliance Of Contract Provisions 17

10. CONTRACTOR'S ORGANIZATION AND EQUIPMENT 17

10.1 Contractor's Legal Address 17
10.2 Contractor's Office At The Work Site 17
10.3 Contractor's Superintendents Or Forepersons 17
10.4 Proficiency In English 18
10.5 Contractor's And Subcontractors' Employees 18
10.6 Contractor To Supply Sufficient Workers And Materials 18
10.7 Contractor To List Trades Working 19
10.8 Contractor's Use Of The Site 19
10.9 Apprenticeship Program 19

11. PROSECUTION AND PROGRESS OF THE WORK 20

11.1 Schedules And Examinations Of Contract Documents 20
11.2 Cost Data 21

12. CLAIMS BY CONTRACTOR 22

12.1 General 22
12.2 Procedure 23
12.3 Claim Format 24
12.4 Mediation 24
12.5 Subcontractor Claims 24
12.6 Exclusive Remedy 25
12.7 Final Claim Disposition 25

13. LEGAL AND MISCELLANEOUS 25

13.1 Laws And Regulations 25
13.2 Permits And Taxes 26
13.3 Responsibility Of Contractor And Indemnification 26
13.4 Concealed Or Unknown Conditions 27
13.5 Notice Of Hazardous Waste Or Materials Conditions 28
13.6 Suspension Of Work 29
13.7 Termination Of Contract For Cause 29
13.8 Termination Of Contract For Convenience 31
13.9 Contingent Assignment Of Subcontracts 33
13.10 Remedies and Contract Integration 34
13.11 Patents 34
13.12 Substitution For Patented And Specified Articles 35
13.13 Interest Of Public Officers 35

13.14 Limit Of Liability 35

14. MODIFICATIONS OF CONTRACT DOCUMENTS....35

14.1 Alterations, Modifications And Force Account Work 35

15. TIME ALLOWANCES....37

15.1 Time Allowances For Performance Of Contract Documents....37
15.2 Entitlement to Change Of Contract Time 37
15.3 Weather-Related Delays....38
15.4 Notice Of Delay 39
15.5 Time Extensions And/Or Compensation Entitlement For Delays 39
15.6 Liquidated Damages....40

16. WORKING CONDITIONS AND PREVAILING WAGES 40

16.1 Use Of Site/Sanitary Rules 40
16.2 Protection Of Work, Persons, And Property 41
16.3 Responsibility For Safety And Health....42
16.4 Emergencies 42
16.5 Use Of Roadways And Walkways....42
16.6 Nondiscrimination 43
16.7 Prevailing Wages....43
16.8 Environmental Controls 43
16.9 Shoring Safety Plan 45

GENERAL CONDITIONS

1. GENERAL

1.1 Documents

1.1.A. Contract Documents are complementary; what is called for by one is as binding as if called for by all. Contract Documents shall not be construed to create a contractual relationship of any kind between (1) Engineer or any Owner's Representative and Contractor; (2) Owner and/or its representatives and a Subcontractor, sub-Subcontractor, or supplier of any Project labor, materials, or equipment; or (3) between any persons or entities other than Owner and Contractor. Owner shall be deemed to be an intended third-party beneficiary of each agreement referenced in clause (2) above, and each such agreement shall so provide. Contractor is fully responsible for Contractor's own acts and omissions. Contractor is responsible for all acts and omissions of its Subcontractors, suppliers, and other persons and organizations performing or furnishing any of the Work, labor, materials, or equipment under a direct or indirect contract with Contractor.

1.2 Exercise Of Contract Responsibilities

1.2.A. In exercising its responsibilities and authorities under the Contract Documents, Owner does not assume any duties or responsibilities to any Subcontractor or supplier and does not assume any duty of care to Contractor, Contractor's Subcontractors or suppliers. Except as expressly set forth in the Contract Documents, in exercising their respective responsibilities and authorities under the Contract Documents, neither Engineer nor any Owner's Representative assumes any duties or responsibilities to any Subcontractor, sub-Subcontractor or supplier nor assumes any duty of care to Contractor or any Subcontractor, sub-Subcontractor or suppliers.

1.3 Defined Terms

1.3.A. All abbreviations and definitions of terms used and not otherwise defined in this Document 00700 are set forth in Section 01420 (References and Definitions). This Document 00700 subdivides at first level into Articles, and then into paragraphs.

2. BIDDING

2.1 Investigation Prior To Bidding

2.1.A. Prior to bidding, Bidders shall perform the work, investigations, research and analysis required by Article 5 of Document 00520 (Agreement). Under the Contract Documents, Contractor is charged with all information and knowledge that a reasonable Bidder would ascertain from having performed the required work, investigations, research, and analysis. Bid prices shall include entire cost of all "incidental work" to complete the Work, as that term is defined in Article 5 of this Document 00700.

2.1.B. Conditions Shown on Contract Documents: Information as to underground conditions, as-built conditions, or other conditions or obstructions indicated in the Contract Documents, *e.g.*, on Drawings or in Specifications, has been obtained with reasonable care, and has been recorded in good faith. Owner warrants, and Contractor may rely on, the accuracy of only limited types of information as discussed below.

1. Aboveground and As-Built Conditions: There is no express or implied warranty and no express or implied representation that any information as to aboveground conditions or as-built conditions indicated in the Contract Documents is correctly shown, or indicated, or complete. As a condition to bidding, Contractor shall verify by independent investigation all aboveground and as-built conditions. In submitting its Bid, Contractor shall rely on the results of its own independent investigation and shall not rely on Owner-supplied information regarding aboveground conditions and as-built conditions.
2. Subsurface Conditions: Contractor may rely only upon the general accuracy of actual reported depths, actual reported character of materials, actual reported soil types, actual reported water conditions, or actual obstructions shown or indicated in the Contract Documents. Owner is not responsible for (1) the completeness of any subsurface condition information for bidding or construction, (2) Contractor's conclusions or opinions drawn from any subsurface condition information, or (3) subsurface conditions that are not specifically shown. (For example, Owner is not responsible for soil conditions in areas contiguous to areas where a subsurface condition is shown.)
3. Conditions Shown in Reports and Drawings Supplied for Informational Purposes: Reference is made to Document 00320 (Geotechnical Data and Existing Conditions) for identification of geotechnical reports, "as-built" information, and other drawings or other documents describing physical conditions in or relating to existing surface or subsurface conditions or structures at or contiguous to the Site. These materials are not Contract Documents and, except for any "technical data" regarding subsurface conditions specifically identified in Document 00320 (Geotechnical Data and Existing Conditions), and "Underground Facilities" data, as limited in Document 00320 (Geotechnical Data and Existing Conditions), Contractor shall not in any manner rely on the information in these materials. Subject to the foregoing, Contractor shall make its own independent investigation of all conditions affecting the Work and must not rely on information provided by Owner.

2.2 Subcontractors

2.2.A. Consistent with Public Contract Code Sections 4101 *et seq.*, Contractor shall not substitute any other person or firm in place of any Subcontractor listed in the Bid. Subcontractors shall not assign or transfer their subcontracts or permit them to be performed by any other contractor without Owner's written approval. At Owner's request, Contractor shall provide Owner with a complete copy of all executed subcontracts or final commercial agreements with Subcontractors and/or suppliers.

2.2.B. Subcontract agreements shall preserve and protect the rights of Owner under the Contract Documents so that subcontracting will not prejudice such rights. To the extent of the Work to be performed by a Subcontractor, Contractor shall require the Subcontractor's written agreement (1) to be bound to the terms of Contract Documents and (2) to assume vis-à-vis Contractor all the obligations and responsibilities that Contractor assumes toward Owner under the Contract Documents. (These agreements include all warranties, claims procedures and rules governing submittals to which Contractor is subject under the Contract Documents.)

2.2.C. Contractor shall provide for the assignment to Owner of all rights any Subcontractor may have against any manufacturer, supplier, or distributor for breach of warranties

and guarantees relating to the Work performed by the Subcontractor under the Contract Documents.

3. CONTRACT AWARD AND COMMENCEMENT OF THE WORK

3.1 Award Of Contract

3.1.A. Owner will make the Award of Contract by issuing a Notice of Award. As a condition to Owner signing Document 00520 (Agreement), however, Contractor shall deliver to Owner the executed agreements, forms, bonds, and insurance documents required by Document 00200 (Instructions to Bidders) in the required quantities and within the required times.

3.2 Commencement Of Work

3.2.A. The Contract Time will commence to run on the 60th Day after the issuance of the Notice of Award or, if a Notice to Proceed is given, on the date indicated in the Notice to Proceed. See also paragraph 15.1.B of this Document 00700. Owner may give a Notice to Proceed at any time within 60 Days after the Notice of Award. Contractor shall not do any Work at the Site prior to the date on which the Contract Time commences to run.

4. BONDS AND INSURANCE

4.1 Bonds

4.1.A. At or before the date indicated in Document 00200 (Instructions to Bidders), Contractor shall file with Owner the following bonds:

1. Corporate surety bond, in the form of Document 00611 (Construction Performance Bond), in the penal sum of 100% of the Contractor's Bid as accepted, to guarantee faithful performance of the Work; and
2. Corporate surety bond, in the form of Document 00612 (Construction Labor and Material Payment Bond), in the penal sum of 100% of the Contractor's Bid as accepted, to guarantee payment of wages for services engaged and of bills contracted for materials, supplies, and equipment used in performance of Contract Documents.

4.1.B. Sureties shall be satisfactory to Owner. Corporate sureties on these bonds and on bonds accompanying Bids shall be duly licensed to do business in the State of California and shall have an A.M. Best Company financial rating of A or better.

4.2 Insurance

4.2.A. See paragraph 2.A of Document 00800 (Supplementary Conditions), incorporated herein by this reference.

5. DRAWINGS AND SPECIFICATIONS

5.1 Intent

5.1.A. Drawings and Specifications are intended to describe a functionally complete and operable Project (and all parts thereof) to be constructed in accordance with the requirements of Contract Documents. Contractor shall perform any work, provide services and furnish any materials or equipment that may reasonably be inferred from the requirements of Contract Documents or from prevailing custom or trade usage as

being required to produce this intended result. Contractor shall interpret words or phrases used to describe Work (including services), materials, or equipment that have well-known technical or construction industry or trade meaning in accordance with that meaning. Drawings' intent specifically includes the intent to depict construction that complies with all applicable laws, codes, and standards.

5.1.B. As part of the "Work," Contractor shall provide all labor, materials, equipment, machinery, tools, facilities, services, employee training and testing, hoisting facilities, Shop Drawings, storage, testing, security, transportation, disposal, the securing of all necessary or required field dimensions, the cutting or patching of existing materials, notices, permits, documents, reports, agreements, and any other items required or necessary to timely and fully complete Work described and the results intended by Contract Documents and, in particular, Drawings and Specifications. Divisions and Specification Sections and the identification on any Drawings shall not control Contractor in dividing Work among Subcontractors or suppliers or delineating the Work to be performed by any specific trade.

5.1.C. Contractor shall perform reasonably implied parts of Work as "incidental work" although absent from Drawings and Specifications. Incidental work includes any work not shown on Drawings or described in Specifications that is necessary or normally or customarily required as a part of the Work shown on Drawings or described in Specifications. Incidental work includes any work necessary or required to make each installation satisfactory, legally operable, functional, and consistent with the intent of Drawings and Specifications or the requirements of Contract Documents including required tasks to be performed under Division 1 of Specifications. Contractor shall perform incidental work without extra cost to Owner. Incidental work shall be treated as if fully described in Specifications and shown on Drawings, and the expense of incidental work shall be included in price Bid and Contract Sum.

5.2 Drawing Details

5.2.A. A typical or representative detail on Drawings shall constitute the standard for workmanship and material throughout corresponding parts of Work. Where necessary, and where reasonably inferable from Drawings, Contractor shall adapt such representative detail for application to such corresponding parts of Work. The details of such adaptation shall be subject to prior approval by Owner. Repetitive features shown in outline on Drawings shall be in exact accordance with corresponding features completely shown.

5.3 Interpretation Of Drawings And Specifications

5.3.A. Should any discrepancy appear or any misunderstanding arise as to the import of anything contained in Drawings and Specifications, or should Contractor have any questions or requests relating to Drawings or Specifications, Contractor shall refer the matter to Owner, in writing. Owner will issue with reasonable promptness written responses, clarifications or interpretations as Owner may determine necessary, which shall be consistent with the intent of and be reasonably inferable from Contract Documents. Such written clarifications or interpretations shall be binding upon Contractor. If Contractor believes that a written response, clarification or interpretation justifies an adjustment in the Contract Sum or Contract Time, Contractor shall give Owner prompt written notice as provided in Section 01250 (Modification Procedures). If the parties are unable to agree to the amount or extent of the adjustment, if any, then

Contractor shall perform the Work in conformance with Owner's response, clarification, or interpretation and may make a written claim for the adjustment as provided in Article 12 of this Document 00700.

5.4 Checking Of Drawings

5.4.A. Before undertaking each part of Work, Contractor shall carefully study and compare Contract Documents and check and verify pertinent figures shown in the Contract Documents and all applicable field measurements. Contractor shall be responsible for any errors that might have been avoided by such comparison. Figures shown on Drawings shall be followed; Contractor shall not scale measurements. Contractor shall promptly report to Owner, in writing, any conflict, error, ambiguity or discrepancy that Contractor may discover. Contractor shall obtain a written interpretation or clarification from Owner before proceeding with any Work affected thereby. Contractor shall provide Owner with a follow-up correspondence every ten Days until it receives a satisfactory interpretation or clarification.

5.5 Standards To Apply Where Specifications Are Not Furnished

5.5.A. The following general specifications shall apply wherever in the Specifications, or in any directions given by Owner in accordance with or supplementing Specifications, it is provided that Contractor shall furnish materials or manufactured articles or shall do Work for which no detailed specifications are shown. Materials or manufactured articles shall be of the best grade, in quality and workmanship, obtainable in the market from firms of established good reputation. If not ordinarily carried in stock, the materials or manufactured articles shall conform to industry standards for first-class materials or articles of the kind required, with due consideration of the use to which they are to be put. Work shall conform to the usual standards or codes, such as those cited in Section 01420 (References and Definitions), for first-class work of the kind required. Contractor shall specify in writing to Owner the materials to be used or Work to be performed under this paragraph 5.5 ten Business Days prior to furnishing such materials or performing such Work.

5.6 Deviation from Specifications and Drawings

5.6.A. Contractor shall perform Work in accordance with Drawings and Specifications. Contractor may deviate from Drawings or the dimensions given in the Drawings, and may deviate from the Specifications, only upon Owner's advance written approval of the proposed deviation. If Work requires a Submittal prior to commencement, then Contractor's performance of such Work prior to Submittal being favorably reviewed shall be at Contractor's sole risk.

5.6.B. Owner may order that locations, lines, and grades for Work vary from those shown on Drawings. Changes may be made in locations, lines, or grades for Work under any item of Contract Documents. No payment in addition to unit price fixed in the Contract Documents for Work under respective items will be allowed on account of variations from Drawings in unit price items. In lump sum contracts, or where there are no unit price items covering Work affected by variations of locations, lines, or grades, all changes in the Contract Documents will be made as set forth in Article 14 of this Document 00700.

5.7 Precedence Of Documents

5.7.A. In the case of discrepancy or ambiguity in the Contract Documents, the following order of precedence shall prevail:

1. Modifications in inverse chronological order (i.e., most recent first), and in the same order as specific portions they are modifying;
2. Document 00520 (Agreement), and terms and conditions referenced therein;
3. Document 00800 (Supplementary Conditions);
4. Document 00700 (General Conditions);
5. Division 1 Specifications;
6. Drawings and Division 2 through 16 Specifications;
7. Written numbers over figures, unless obviously incorrect;
8. Figured dimensions over scaled dimensions;
9. Large-scale Drawings over small-scale Drawings.

5.7.B. Any conflict between Drawings and Division 2 through 16 Specifications will be resolved in favor of the document of the latest date (i.e., the most recent document), and if the dates are the same or not determinable, then in favor of Specifications.

5.7.C. Any conflict between a bill or list of materials shown in the Contract Documents and the actual quantities required to complete Work required by Contract Documents, will be resolved in favor of the actual quantities.

5.7.D. In the event the Specifications include divisions above Division 16 (e.g., Division 17 and above), then such divisions shall be included within the Contract Documents unless identified otherwise.

5.8 Ownership And Use Of Drawings, Specifications And Contract Documents

5.8.A. Drawings, Specifications, and other Contract Documents were prepared for use for Work of Contract Documents only. No part of Contract Documents shall be used for any other construction or for any other purpose except with the written consent of Owner. Any unauthorized use of Contract Documents is prohibited and at the sole liability of the user.

6. CONSTRUCTION BY OWNER OR BY SEPARATE CONTRACTORS

6.1 Owner's Right To Perform Construction And To Award Separate Contracts

6.1.A. Owner may perform with its own forces, construction or operations related to the Project. Owner may also award separate contracts in connection with other portions of the Project or other construction or operations, on the Site or areas contiguous to the Site, under conditions similar to these Contract Documents, or may have utility owners perform other work. When separate contracts are awarded for different portions of the Project or other construction or operations on the Site, the term "Contractor" in these Contract Documents shall mean the Contractor herein.

6.2 Mutual Responsibility

6.2.A. Contractor shall afford all other contractors, utility owners, and Owner (if Owner is performing work with its own forces), proper and safe access to the Site, and reasonable opportunity for the installation and storage of their materials. Contractor shall ensure that the execution of its Work properly connects and coordinates with others' work, and shall cooperate with them to facilitate the progress of the Work.

6.2.B. Contractor shall coordinate its Work with the work of other separate contractors, Owner, and utility owners. Contractor shall hold coordination meetings with other contractors, Owner and its representatives, and utility owners as required by Section 01315 (Project Meetings).

6.2.C. Unless otherwise provided in the Contract Documents, Contractor shall do all cutting, fitting, and patching of the Work that may be required to make its several parts come together properly and integrate with such other work. Contractor shall not endanger any work of other separate contractors, Owner, or utility owners by cutting, excavating, or otherwise altering their work and will only cut or alter their work with the written consent of Owner and the others whose work will be affected.

6.2.D. Contractor's duties and responsibilities under paragraph 6.2.A of this Document 00700 are for the benefit of Owner and also for the benefit of such other contractors and utility owners working at the Site to the extent that there are comparable provisions for the benefit of Contractor in the direct contracts between Owner and such other contractors and utility owners.

6.2.E. To the extent that any part of Contractor's Work is to interface with work performed or installed by other contractors or utility owners, Contractor shall inspect and measure the in-place work. Contractor shall promptly report to Owner in writing any defect in in-place work that will impede or increase the cost of Contractor's interface unless corrected. Owner will require the contractor responsible for the Defective Work to make corrections so as to conform to its contract requirements, or, if the defect is the result of an error or omission in the Contract Documents, issue a Change Order. If Contractor fails to measure, inspect and/or report to Owner in writing defects that are reasonably discoverable, Contractor shall bear all costs of accomplishing the interface acceptable to Owner. This provision shall be included in any and all other contracts or subcontracts for Work to be performed where such a conflict could exist.

6.3 Owner Authority Over Coordination

6.3.A. Owner will have authority over coordination of the activities of multiple contractors in cases where Owner performs Work with its own forces or contracts with others for the performance of other Work on the Project, or utilities Work on the Site. Owner may at any time and in its sole discretion, designate a person or entity other than Owner to have authority over the coordination of the activities among the various contractors. Owner's authority with respect to coordination of the activities of multiple contractors and utility owners shall not relieve Contractor of its obligation to other contractors and utility owners to coordinate its Work with other contractors and utility owners as specified in paragraph 6.2 of this Document 00700. Contractor shall promptly notify Owner in writing when another contractor on the Project fails to coordinate its work with the Work of Contract Documents.

6.3.B. Contractor shall suspend any part of the Work or carry on the same in such manner as directed by Owner when such suspension or prosecution is necessary to facilitate the work of other contractors or workers. No damages or claims by Contractor will be allowed if the suspension or Work change is due in whole or in part to Contractor's failure to perform its obligation to coordinate its Work with other contractors and utility owners. Damages or claims will be allowed only to the extent of fault by Owner if the suspension or Work change is due in whole or in part to another contractor's failure to coordinate its work with Contractor, other contractors, and utility owners.

Owner reserves the right to back charge Contractor for any damages or claims incurred by other contractors as a result of Contractor's failure to perform its obligations to coordinate with other contractors and utility owners. Owner may deposit the funds retained with a Court of competent jurisdiction pursuant to applicable interpleader procedures and Contractor releases Owner of further liability regarding such funds.

7. OWNER AND PAYMENT

7.1 Owner's Representative(s)

7.1.A. Owner's Representative(s) will have limited authority to act on behalf of Owner as set forth in the Contract Documents. Except as otherwise provided in these Contract Documents or subsequently identified in writing by Owner, Owner will issue all communications to Contractor through Owner's Representative, and Contractor shall issue all communications to Owner through Owner's Representative in a written document delivered to Owner. Should any direct communications between Contractor and Owner's consultants, architects, or engineers not identified in Article 2 of Document 00520 (Agreement) occur during field visits or by telephone, Contractor shall immediately confirm them in a written document copied to Owner.

7.2 Means And Methods Of Construction

7.2.A. Subject to those rights specifically reserved in the Contract Documents, Owner will not supervise, or direct, or have control over, or be responsible for, Contractor's means, methods, techniques, sequences or procedures of construction, or the safety precautions and programs incident thereto, or Contractor's failure to comply with laws and regulations applicable to the furnishing or performance of Work. Owner will not be responsible for Contractor's failure to perform or furnish the Work in accordance with Contract Documents.

7.3 Receipt And Processing Of Applications For Payment

7.3.A. As required by Section 01200 (Price and Payment Procedures), Contractor shall prepare the schedules, submit Applications for Payment and warrant title to all Work covered by each Application for Payment. Owner will review Contractor's Applications for Payment and make payment thereon, and Contractor shall make payments to Subcontractors, suppliers, and others, as required by Section 01200 (Price and Payment Procedures).

8. CONTROL OF THE WORK

8.1 Supervision Of Work By Contractor

8.1.A. Contractor shall supervise, inspect, and direct Work competently and efficiently, devoting the attention and applying such personal skills and expertise as may be required and necessary to perform Work in accordance with Contract Documents. Contractor shall be solely responsible for and have control and charge of construction means, methods, techniques, sequences and procedures, safety precautions, and programs in connection with the Work. Contractor shall be responsible to see that the completed Work complies accurately with Contract Documents.

8.1.B. Contractor shall keep on the Site at all times during Work progress a competent resident Superintendent, who shall not be replaced without Owner's express written consent. The Superintendent shall be Contractor's representative at the Site and shall

have complete authority to act on behalf of Contractor. All communications to and from the Superintendent shall be as binding as if given to or by Contractor.

8.2 Observation Of Work By Owner

8.2.A. Work shall be performed under Owner's general observation and administration. Contractor shall comply with Owner's directions and instructions in accordance with the terms of Contract Documents, but nothing contained in these General Conditions shall be taken to relieve Contractor of any obligations or liabilities under the Contract Documents. Owner's failure to review or, upon review, failure to object to any aspect of Work reviewed, shall not be deemed a waiver or approval of any non-conforming aspect of Work.

8.2.B. Owner may engage an independent consultant or engineer (collectively for purposes of this paragraph 8.2, "Engineer") to assist in administering the Work. If so engaged, Engineer will advise and consult with Owner, but will have authority to act on behalf of Owner only to extent provided in the Contract Documents or as set forth in writing by Owner. Engineer will not be responsible for and will not have control or charge of construction means, methods, techniques, sequences or procedures, or for safety precautions and programs in connection with Work. Engineer will not be responsible for or have control over the acts or omissions of Contractor, Subcontractors or their agents or employees, or any other persons performing Work.

8.2.C. Engineer may review Contractor's Submittals, such as Shop Drawings, Product Data, and Samples, but only for conformance with design concept of Work and with information given in the Contract Documents.

8.2.D. Engineer may visit the Site at intervals appropriate to stage of construction to become familiar generally with the progress and quality of Work and to determine in general if Work is proceeding in accordance with Contract Documents. Based on its observations, Engineer may recommend to Owner that it disapprove or reject Work that Engineer believes to be Defective or will not produce a complete Project that conforms to Contract Documents or will prejudice the integrity of the design concept of the completed Project as a functioning whole as indicated by Contract Documents. Owner will also have authority to require special inspection or testing of Work, whether or not the Work is fabricated, installed, or completed.

8.2.E. Engineer may conduct inspections to recommend to Owner the dates that Contractor has achieved Substantial Completion and Final Acceptance, and will receive and forward to Owner for review written warranties and related documents required by Contract Documents.

8.3 Access To Work

8.3.A. During performance of Work, Owner and its agents, consultants, and employees may at any time enter upon Work, shops, or studios where any part of the Work may be in preparation, or factories where any materials for use in Work are being or are to be manufactured, and Contractor shall provide proper and safe facilities for this purpose, and shall make arrangements with manufacturers to facilitate inspection of their processes and products to such extent as Owner's interests may require. Other contractors performing work for Owner may also enter upon Work for all purposes required by their respective contracts. Subject to the rights reserved in the Contract Documents, Contractor shall have sole care, custody, and control of the Site and its Work areas.

8.4 Existing Utilities Shown or Indicated In Contract Documents

8.4.A. Drawings or Specifications may indicate above- and below-grade structures, drainage lines, storm drains, sewers, water, gas, electrical, chemical, hot water, and other similar items and utilities, and additional information may be on file at the Common Ground Alliance, 811. Contractor shall locate these known existing installations before proceeding with trenching or other operations that may cause damage, shall maintain them in service where appropriate, and shall repair any damage to them caused by the Work, at no increase in Contract Sum. Additional utilities whose locations are unknown to Owner are suspected to exist. Contractor shall be alert to their existence; if they are encountered, Contractor shall immediately report to Owner for disposition of the same. In addition to reporting if any utility is damaged, Contractor shall take appropriate action as provided in this Document 00700. Additional compensation or extension of time on account of utilities not shown or otherwise brought to Contractor's attention, including reasonable action taken to protect or repair damage, shall be determined as provided in this Document 00700.

8.4.B. At no additional cost to Owner, Contractor shall incorporate into the Work main or trunk line utilities identified in the Contract Documents and other utilities or underground structures known or reasonably discernible and that will remain in service, including reasonable adjustments to the design location (including minor relocations) of the existing or new installations. Contractor shall take immediate action to restore any in-service installations damaged by Contractor's operations. Should Owner determine that Contractor has not responded in a timely manner or not diligently pursued completion of the Work, Owner may restore service and deduct the costs of such action by Owner from the amounts due under the Contract.

8.4.C. Consistent with Government Code Section 4215, as between Owner and Contractor, Owner will be responsible for the timely removal, relocation, or protection of existing main or trunk line utility facilities located on the Site only if such utilities are not identified in the Contract Documents or Document 00320 (Geotechnical Data and Existing Conditions). Owner will compensate for the cost of locating and repairing damage not due to Contractor's failure to exercise reasonable care, removing and relocating such main or trunk line utility facilities not indicated in the Contract Documents or Document 00320 (Geotechnical Data and Existing Conditions) with reasonable accuracy, and equipment on the Project necessarily idled during such Work.

8.4.D. Prior to performing Work at the Site, Contractor shall lay out the locations of known underground utilities that are to remain in service and other significant known underground installations. At no additional cost to Owner, prior to commencing other Work in proximity to such known underground utilities or installations that can be readily inferred from adjacent surface improvements, Contractor shall further locate, by carefully excavating with small equipment, potholing, and principally by hand, such utilities or installations that are to remain and that are subject to damage. This obligation applies to all utilities (including, but not limited to, those referenced in paragraph 8.4.C of this Document 00700).

8.4.E. Nothing in this Document 00700 shall be deemed to require Owner to indicate the presence of existing service laterals or appurtenances whenever the presence of such utilities on the Site can be inferred by Contractor from the presence of an underground transmission main or other visible facilities, such as buildings, new asphalt, meters,

and junction boxes, on or adjacent to the Site. Contractor shall immediately secure all available information and notify Owner and utility, in writing, of its discovery, while performing Work under the Contract Documents, of any utility facilities not identified in the Drawings and Specifications.

8.5 Protection of Underground Facilities When Digging Trenches Or During Excavation

8.5.A. Before commencing Work of digging trenches or excavation, Contractor shall review all information available regarding subsurface conditions, including but not limited to information supplied in Document 00320 (Geotechnical Data and Existing Conditions), and subject to the terms and conditions of these documents, Contractor shall also comply with Government Code Sections 4216 to 4216.9, and in particular Section 4216.2 which provides, in part:

> Except in an emergency, every person planning to conduct any excavation shall contact the appropriate regional notification center at least two working days, but no more than 14 calendar days, prior to commencing that excavation, if the excavation will be conducted in an area which is known, or reasonably should be known, to contain subsurface installations other than the underground facilities owned or operated by the excavator, and, if practical, the excavator shall delineate with white paint or other suitable markings the area to be excavated. The regional notification center shall provide an inquiry identification number to the person who contacts the center and shall notify any member, if known, who has a subsurface installation in the area of the proposed excavation.

8.5.B. Contractor shall contact Common Ground Alliance, telephone 811, and schedule the Work to allow ample time for the center to notify its members and, if necessary, for any member to field locate and mark its facilities. Contractor is charged with knowledge of all subsurface conditions reflected in 811 records. Prior to commencing excavation or trenching Work, Contractor shall provide Owner with copies of all 811 records secured by Contractor. Contractor shall advise Owner of any conflict between information provided in Document 00320 (Geotechnical Data and Existing Conditions), the Drawings and that provided by 811 records. Contractor's excavation shall be subject to and comply with the Contract Documents, including without limitation paragraphs 2.1 and 8.4 of this Document 00700.

8.5.C. If an Underground Facility is uncovered or revealed at or contiguous to the Site which was not shown or indicated in the materials supplied by Owner or in information on file at 811 or is otherwise reasonably available to Contractor, then Contractor shall, promptly after becoming aware thereof and before further disturbing conditions affected thereby (and in no event later than seven Days), and prior to performing any Work in connection therewith (except in an emergency as required by Article 16 of this Document 00700), identify the owner of such Underground Facility and give written notice to that owner and to Owner. During such time, Contractor shall be responsible for the safety and protection of such Underground Facility.

8.5.D. Contractor shall be allowed an increase in the Contract Sum or an extension of the Contract Time, or both, to the extent that they are attributable to the existence of any Underground Facility that is owned and was built by Owner only where the Underground Facility:

1. Was not shown or indicated in the Contract Documents or in the information supplied pursuant to Document 00320 (Geotechnical Data and Existing Conditions) or in information on file at 811; and
2. Contractor did not know of it; and
3. Contractor could not reasonably have been expected to be aware of it or to have anticipated it from the information available. (For example, if surface conditions such as pavement repairs, valve covers, or other markings, indicate the presence of an Underground Facility, then an increase in the Contract Sum or an extension of the Contract Time will not be due, even if the Underground Facility was not indicated in the Contract Documents, in the information supplied to Contractor pursuant to Document 00320 [Geotechnical Data and Existing Conditions], in information on file at 811, or otherwise reasonably available to Contractor.)

8.5.E. Contractor shall bear the risk that Underground Facilities not owned or built by Owner may differ in nature or locations shown in information made available by Owner pursuant to Document 00320 (Geotechnical Data and Existing Conditions), in information on file at 811, or otherwise reasonably available to Contractor. Underground Facilities are inherent in construction involving digging of trenches or other excavations and Contractor is to apply its skill and industry to verify the information available.

8.5.F. The cost of all of the following will be included in the Contract Sum and Contractor shall have full responsibility for (a) reviewing and checking all available information and data including, but not limited to, Document 00320 (Geotechnical Data and Existing Conditions) and information on file at 811; (b) locating all Underground Facilities shown or indicated in the Contract Documents, available information, or indicated by visual observation including, but not limited to, and by way of example only, engaging qualified locating services and all necessary backhoeing and potholing; (c) coordinating the Work with the owners of such Underground Facilities during construction; and (d) the safety and protection of all such Underground Facilities and repairing any damage thereto resulting from the Work.

9. WARRANTY, GUARANTY, AND INSPECTION OF WORK

9.1 Warranty And Guaranty

9.1.A. General Representations and Warranties: Contractor represents and warrants that it is and will be at all times fully qualified and capable of performing every Phase of the Work and to complete Work in accordance with the terms of Contract Documents. Contractor warrants that all construction services shall be performed in accordance with generally accepted professional standards of good and sound construction practices and all requirements of Contract Documents. Contractor warrants that Work, including but not limited to each item of materials and equipment incorporated therein, shall be new, of suitable grade of its respective kind for its intended use, and free from defects in design, engineering, materials, construction and workmanship. Contractor warrants that Work shall conform in all respects with all applicable requirements of federal, state and local laws, applicable construction codes and standards, licenses, and permits, Drawings and Specifications and all descriptions set forth therein, and all other requirements of Contract Documents. Contractor shall not be responsible, however, for the negligence of others in the specification of specific

equipment, materials, design parameters and means or methods of construction where that is specifically shown and expressly required by Contract Documents.

9.1.B. Extended Warranties and Guaranties: For any warranty or guaranty provided by the supplier or manufacturer of any equipment or materials used in the Project exceeding the term of Contractor's Guaranty pursuant to Document 00630 (Guaranty) ("Extended Warranty"), Contractor shall assign such warranties and guaranties to Owner and supply Owner with all warranty and guaranty documents relative thereto.

9.1.C. Environmental and Toxics Warranty: The covenants, warranties and representations contained in this paragraph 9.1.B. are effective continuously during Contractor's Work on the Project and following cessation of labor for any reason including, but not limited to, Project completion. Except as expressly shown in the Contract Documents, Contractor covenants, warrants and represents to Owner that:

1. To Contractor's knowledge after due inquiry, no lead or Asbestos-containing materials were installed or discovered in the Project at any time during Contractor's construction thereof. If any lead or Asbestos-containing materials were discovered, Contractor made immediate written disclosure to Owner.
2. To Contractor's knowledge after due inquiry, no electrical transformers, light fixtures with ballasts or other equipment containing PCBs were installed or discovered on the Project at any time during Contractor's construction thereof. If any such materials were discovered, Contractor made immediate written disclosure to Owner.
3. To Contractor's knowledge after due inquiry, no storage tanks for gasoline or any other toxic substance were installed or discovered on the Project at any time during Contractor's construction thereof. If any such materials were discovered, Contractor made immediate written disclosure to Owner.
4. Contractor's operations concerning the Project are and were not in violation of any applicable environmental federal, state, or local statute, law or regulation dealing with hazardous materials substances or toxic substances and no notice from any governmental body has been served upon Contractor claiming any violation of any such law, ordinance, code or regulation, or requiring or calling attention to the need for any Work, repairs, construction, alteration, or installation on or in connection with the Project in order to comply with any such laws, ordinances, codes, or regulations, with which Contractor has not complied. If there are any such notices with which Contractor has complied, Contractor shall provide Owner with copies thereof.

9.2 Inspection Of Work

9.2.A. All materials, equipment, and workmanship used in Work shall be subject to inspection and testing at all times during construction and/or manufacture in accordance with the terms of Contract Documents. Work and materials, and manufacture and preparation of materials, from beginning of construction until Final Completion and acceptance of Work, shall be subject to inspection and rejection by Owner, its agents, representatives or independent contractors retained by Owner to perform inspection services, or governmental agencies with jurisdictional interests. Contractor shall provide them proper and safe conditions for such access and advise them of Contractor's Site safety procedures and program so that they may comply therewith as applicable. Upon request or where specified, Owner shall be afforded access for inspection at the source of supply, manufacture or assembly of any item of

material or equipment, with reasonable accommodations supplied for making such inspections.

9.2.B. Contractor shall furnish, in such quantities and sizes as may be required for proper examination and tests, Samples or test specimens of all materials to be used or offered for use in connection with Work. Contractor shall prepare Samples or test specimens at its expense and furnish them to Owner. Contractor shall submit all Samples in ample time to enable Owner to make any necessary tests, examinations, or analyses before the time it is desired to incorporate the material into the Work.

9.2.C. Contractor shall give Owner timely notice of readiness of Work for all required inspections, tests or approvals, and shall cooperate with inspection and testing personnel to facilitate required inspections or tests.

9.2.D. If applicable laws or regulations of any public body having jurisdiction require any Work (or part thereof) specifically to be inspected, tested or approved by an employee or other representative of such public body, Contractor shall assume full responsibility for arranging and obtaining such inspections, tests or approvals, and furnish Owner with the required certificates of inspection, or approval. Owner will pay the cost of initial testing and Contractor shall pay all costs in connection with any follow-up or additional testing. Contractor shall also be responsible for arranging and obtaining and shall pay all costs in connection with any inspections, tests or approvals required for the acceptance of materials or equipment to be incorporated in the Work, or of materials, mix designs, or equipment submitted for approval prior to Contractor's purchase thereof for incorporation in the Work.

9.2.E. If Contractor covers any Work, or the work of others, prior to any required inspection, test or approval without written approval of Owner, Contractor shall uncover the Work at Owner's request. Contractor shall bear the expense of uncovering Work and replacing Work.

9.2.F. In any case where Contractor covers Work contrary to Owner's request, Contractor shall uncover Work for Owner's observation or inspection at Owner's request. Contractor shall bear the cost of uncovering Work.

9.2.G. Whenever required by Owner, Contractor shall furnish tools, labor and materials necessary to make examination of Work that may be completed or in progress, even to extent of uncovering or taking down portions of finished Work. Should Work be found unsatisfactory, cost of making examination and of reconstruction shall be borne by Contractor. If Work is found to be satisfactory, Owner, in manner herein prescribed for paying for alterations, Modifications, and extra Work, except as otherwise herein specified, will pay for examination.

9.2.H. Inspection of the Work by or on behalf of Owner, or Owner's failure to do so, shall not under any circumstances be deemed a waiver or approval of any non-conforming aspect of the Work. Contractor shall have an absolute duty, in the absence of a written Change Order signed by Owner, to perform Work in conformance with the Contract Documents and to correct Defective Work immediately upon Contractor's knowledge.

9.2.I. Any inspection, evaluation, or test performed by or on behalf of Owner relating to the Work is solely for the benefit of Owner, and shall not be relied upon by Contractor. Contractor shall not be relieved of the obligation to perform Work in accordance with the Contract Documents, nor relieved of any guaranty, warranty, or other obligation, as a result of any inspections, evaluations, or tests performed by Owner, whether or

not such inspections, evaluations, or tests are permitted or required under the Contract Documents. Contractor shall be solely responsible for testing and inspecting Work already performed to determine whether such Work is in proper condition to receive later Work.

9.3 Correction Of Defective Work

9.3.A. If Contractor fails to supply sufficient skilled workers, suitable materials or equipment, or to furnish or perform the Work in such a way that the completed Work will conform to Contract Documents, Owner may order Contractor to replace any such Defective Work, or stop any portion of Work to permit Owner (at Contractor's expense) to replace such Defective Work. These Owner rights are entirely discretionary on the part of the Owner, and shall not give rise to any duty on the part of Owner to exercise the rights for the benefit of Contractor or any other party.

9.3.B. Owner may direct Contractor to correct any Defective Work or remove it from the Site and replace it with Work that is not Defective and satisfactorily correct or remove and replace any damage to other Work or the work of others resulting from the correction or removal. Contractor shall be responsible for any and all claims, costs, losses, and damages caused by or resulting from such correction or removal. A Change Order will be issued incorporating the necessary revisions in the Contract Documents with respect to the Work and the Contract Sum. If the parties are unable to agree to the amount of an appropriate decrease in the Contract Sum, Owner may decide the proper amount or, in its discretion may elect to leave the Contract Sum unchanged and deduct from moneys due Contractor, all such claims, costs, losses, and damages caused by or resulting from the correction or removal. If Contractor disagrees with Owner's calculations, it may make a claim as provided in Article 12 of this Document 00700. Owner's rights under this paragraph 9.3.B shall be in addition to any other rights it may have under the Contract Documents or by law.

9.3.C. Correction Period: If within the Guaranty Period, as defined by Document 00630 (Guaranty), any Work (completed or incomplete) is found to be Defective, Contractor shall promptly, without cost to Owner and in accordance with Owner's written instructions, correct such Defective Work. Contractor shall remove any Defective Work rejected by Owner and replace it with Work that is not Defective, and satisfactorily correct or remove and replace any damage to other Work or the work of others resulting therefrom. If Contractor fails to promptly comply with the terms of such instructions, or in an emergency where delay would cause serious risk of loss or damage, Owner may have the Defective Work corrected or the rejected Work removed and replaced. Contractor shall pay for all claims, costs, losses, and damages caused by or resulting from such removal and replacement. Where Contractor fails to correct Defective Work, or defects are discovered outside the correction period, Owner shall have all rights and remedies granted by law.

9.3.D. In special circumstances where a part of the Work is occupied or a particular item of equipment is placed in continuous service before Final Acceptance of all the Work, the correction period for that part of Work or that item may start to run from an earlier date if so provided by Change Order.

9.3.E. Where Defective Work or rejected Work (and damage to other Work resulting therefrom) has been corrected, removed, or replaced under this provision after the commencement of the correction period, the correction period hereunder with respect

to such Work shall be extended for an additional period of one year, or such longer period of time as may be prescribed by laws, regulations, or by the terms of the Contract Documents, after such correction or removal and replacement has been satisfactorily completed.

9.4 Acceptance And Correction Of Defective Work By Owner

9.4.A. Owner may accept Defective Work. Contractor shall pay all claims, costs, losses, and damages attributable to Owner's evaluation of and determination to accept such Defective Work. If Owner accepts any Defective Work prior to final payment, a Change Order will be issued incorporating the necessary revisions in the Contract Documents with respect to the Work and the Contract Sum. If the parties are unable to agree to the amount of an appropriate decrease in the Contract Sum, Owner may deduct from moneys due Contractor, all claims, costs, losses, damages, expenses, and liabilities attributable to the Defective Work. If Contractor disagrees with Owner's calculations, Contractor may make a claim as provided in Article 12 of this Document 00700. If Owner accepts any Defective Work after final payment, Contractor shall pay to Owner, an appropriate amount as determined by Owner.

9.4.B. Owner may correct and remedy deficiency if, after five Days' written notice to Contractor, Contractor fails to correct Defective Work or to remove and replace rejected Work in accordance with paragraph 9.3.B of this Document 00700; or provide a plan for correction of Defective Work acceptable to Owner; or perform Work in accordance with Contract Documents. In connection with such corrective and remedial action, Owner may exclude Contractor from all or part of the Site; take possession of all or part of Work and suspend Contractor's Work related thereto; take possession of all or part of Contractor's tools, appliances, construction equipment, and machinery at the Site; and incorporate in Work any materials and equipment stored at the Site or for which Owner has paid Contractor but which are stored elsewhere. Contractor shall allow Owner, its representatives, agents, employees, and other contractors and Engineer's consultants access to the Site to enable Owner to exercise the rights and remedies under this paragraph 9.4.B. Contractor shall be responsible for all claims, costs, losses, damages, expenses and liabilities incurred or sustained by Owner in exercising such rights and remedies. A Change Order will be issued incorporating the necessary revisions in the Contract Documents with respect to Work and the Contract Sum. If the parties are unable to agree to the amount of an appropriate decrease in the Contract Sum, Owner may deduct from moneys due Contractor, all claims, costs, losses and damages caused by or resulting from the correction or removal. If Contractor disagrees with Owner's calculations, Contractor may make a claim as provided in Article 12 of this Document 00700.

9.5 Rights Upon Inspection, Correction, Or Acceptance

9.5.A. Contractor shall not be allowed an extension of Contract Time because of any delay in the performance of Work attributable to the exercise by Owner of its rights and remedies under this Article 9. Where Owner exercises its rights under this Article 9, it retains and may still exercise all other rights it has by law or under the Contract Documents including, but not limited to, the right to terminate Contractor's right to proceed with the Work under the Contract Documents for cause and/or make a claim or back charge where a Change Order cannot be agreed upon.

9.5.B. Inspection by Owner or its authorized agents or representatives shall not relieve Contractor of its obligation to have furnished material and workmanship in accordance with Contract Documents. Payment for Work completed through periodic progress payments, Final Payment, or otherwise shall not operate to waive Owner's right to require full compliance with Contract Documents and shall in no way be deemed as acceptance of any Defective Work paid therefor. Contractor's obligation to complete the Work in accordance with Contract Documents shall be absolute, unless Owner agrees otherwise in writing.

9.5.C. Neither acceptance of the whole or any part of Work by Owner nor any verbal statements on behalf of Owner or its authorized agents or representatives shall operate as a waiver or Modification of any provision of the Contract Documents, or of any power reserved to Owner herein nor any right to damages provided in the Contract Documents.

9.6 Proof Of Compliance Of Contract Provisions

9.6.A. In order that Owner may determine whether Contractor has complied or is complying with requirements of Contract Documents not readily enforceable through inspection and tests of Work and materials, Contractor shall at any time, when requested, submit to Owner properly authenticated documents or other satisfactory proofs of compliance with all applicable requirements.

10. CONTRACTOR'S ORGANIZATION AND EQUIPMENT

10.1 Contractor's Legal Address

10.1.A. Address and facsimile number given in Contractor's Bid are hereby designated as Contractor's legal address and facsimile number. Contractor may change its legal address and facsimile number by notice in writing, delivered to Owner, which in conspicuous language advises Owner of a change in legal address or facsimile number, and which Owner accepts in writing. Delivery to Contractor's legal address or depositing in any post office or post office box regularly maintained by the United States Postal Service, in a wrapper with postage affixed, directed to Contractor at legal address, or of any drawings, notice, letter or other communication, shall be deemed legal and sufficient service thereof upon Contractor. Facsimile to Contractor's designated facsimile number of any letter, memorandum, or other communication on standard or legal sized paper, with proof of facsimile transmission, shall be deemed legal and sufficient service thereof upon Contractor.

10.2 Contractor's Office At The Work Site

10.2.A. Contractor shall maintain an office at the Site, which office shall be headquarters of a Contractor representative authorized to transmit to and receive from Owner, communications, instructions, or Drawings. Communications, instructions, or Drawings given to Contractor's representative or delivered at the Site office in representative's absence shall be deemed to have been given to Contractor.

10.3 Contractor's Superintendents Or Forepersons

10.3.A. Contractor shall at all times be represented on Site by one or more superintendents or forepersons authorized and competent to receive and carry out any instructions that Owner may give, and shall be liable for faithful observance of instructions delivered to Contractor or to authorized representative or representatives on Site.

10.4 Proficiency In English

10.4.A. Supervisors, security guards, safety personnel, and employees who have unescorted access to the Site shall possess proficiency in the English language in order to understand, receive, and carry out oral and written communications or instructions relating to their job functions, including safety and security requirements.

10.5 Contractor's And Subcontractors' Employees

10.5.A. Contractor shall employ, and shall permit its Subcontractors to employ, only competent and skillful personnel to do Work. If Owner notifies Contractor that any of its employees, or any of its Subcontractors' employees on Work is incompetent, unfaithful, disorderly, or profane, or fails to observe customary standards of conduct, or refuses to carry out any provision of the Contract Documents, or uses threatening or abusive language to any person on Work representing Owner, or violates sanitary rules, or is otherwise unsatisfactory, and if Owner requests that such person be discharged from Work, then Contractor or its Subcontractor shall immediately discharge such person from Work and the discharged person shall not be re-employed on the Work except with consent of Owner.

10.6 Contractor To Supply Sufficient Workers And Materials

10.6.A. Unless otherwise required by Owner under the terms of Contract Documents, Contractor shall at all times keep on the Site materials and employ qualified workers sufficient to prosecute Work at a rate and in a sequence and manner necessary to complete Work within the Contract Time. This obligation shall remain in full force and effect notwithstanding disputes or claims of any type.

10.6.B. At any time during progress of Work should Contractor directly or indirectly (through Subcontractors) refuse, neglect, or be unable to supply sufficient materials or employ qualified workers to prosecute the Work as required, then Owner may require Contractor to accelerate the Work and/or furnish additional qualified workers or materials as Owner may consider necessary, at no cost to Owner. If Contractor does not comply with the notice within three Business Days of date of service thereof, Owner shall have the right (but not a duty) to provide materials and qualified workers to finish the Work or any affected portion of Work, as Owner may elect. Owner may, at its discretion, exclude Contractor from the Site, or portions of the Site or separate Work elements during the time period that Owner exercises this right. Owner will deduct from moneys due or which may thereafter become due under the Contract Documents, the sums necessary to meet expenses thereby incurred and paid to persons supplying materials and doing Work. Owner will deduct from funds or appropriations set aside for purposes of Contract Documents the amount of such payments and charge them to Contractor as if paid to Contractor. Contractor shall remain liable for resulting delay, including liquidated damages and indemnification of Owner from claims of others.

10.6.C. Exercise by Owner of the rights conferred upon Owner in paragraph 10.6.B of this Document 00700, is entirely discretionary on the part of Owner. Owner shall have no duty or obligation to exercise the rights referred to in paragraph 10.6.B of this Document 00700 and its failure to exercise such rights shall not be deemed an approval of existing Work progress or a waiver or limitation of Owner's right to exercise such rights in other concurrent or future similar circumstances. The rights conferred upon

Owner under paragraph 10.6.B of this Document 00700 are cumulative to Owner's other rights under any provision of the Contract Documents.

10.7 Contractor To List Trades Working

10.7.A. Contractor shall list the trades working on the Site and their scheduled activities on a daily basis, and provide a copy of that list to Owner.

10.8 Contractor's Use Of The Site

10.8.A. Contractor shall not make any arrangements with any person to permit occupancy or use of any land, structure, or building within the limits of the Work, for any purpose whatsoever, either with or without compensation, in conflict with any agreement between Owner and any owner, former owner or tenant of such land, structure, or buildings. Contractor may not occupy Owner-owned property outside the limit of the Work as indicated on the Drawings unless it obtains prior approval from Owner.

10.9 Apprenticeship Program

10.9.A. Contractor and Subcontractors shall comply with the requirements of California Labor Code Sections 1776, 1777.5, and 1777.6 concerning the employment of apprentices by Contractor or Subcontractors. Willful failure to comply may result in penalties, including loss of the right to Bid on or receive public works contracts.

10.9.B. Section 1777.5, as amended, requires a Contractor or Subcontractor employing tradespersons in any apprenticeable occupation to apply to the joint apprenticeship committee nearest the site of a public works project and which administers the apprenticeship program in that trade for a certification of approval. The certificate shall also fix the ratio of apprentices to journeypersons that will be used in performance of the Contract. The ratio of work performed by apprentices to journeypersons in such cases shall not be less than one *hour* of apprentice's work for every five *hours* of labor performed by journeypersons (the minimum ratio for the land surveyor classification shall not be less than one apprentice for each five journeypersons), except:

1. When unemployment for the previous three-month period in the area exceeds an average of 15 percent;
2. When the number of apprentices in training in the area exceeds a ratio of one to five;
3. When a trade can show that it is replacing at least 1/30 of its membership through apprenticeship training on an annual basis state-wide or locally; or
4. Assignment of an apprentice to any work performed under a public works contract would create a condition which would jeopardize his or her life or the life, safety, or property of fellow employees or the public at large or if the specific task to which the apprentice is to be assigned is of such a nature that training cannot be provided by a journeyperson.

10.9.C. Contractor is required to make contributions to funds established for administration of apprenticeship programs if Contractor employs registered apprentices or journeypersons in any apprenticeable trade on such contracts and if other contractors on the public works site are making such contributions.

10.9.D. Information relative to apprenticeship standards, wage schedules, and other requirements may be obtained from the Director of the California Department of

Industrial Relations, or from the Division of Apprenticeship Standards and its branch offices.

11. PROSECUTION AND PROGRESS OF THE WORK

11.1 Schedules And Examinations Of Contract Documents

11.1.A. Contractor shall submit schedules, reports, and Submittals in the appropriate quantity and within the required time, arrange conferences and meetings, and proceed with the Work in accordance with Contract Documents, including Sections 01315 (Project Meetings), 01320 (Progress Schedules and Reports), and 01330 (Submittal Procedures).

11.1.B. Contractor shall submit to Owner for review and discussion at the initial Schedule Review Meeting described in Section 01315 (Project Meetings):

1. Progress Schedules and Reports as required by Sections 01320 (Progress Schedules and Reports) and 01330 (Submittal Procedures). Contractor shall utilize Progress Schedule in planning, scheduling, coordinating, performing, and controlling Work (including all activities of Subcontractors, assigned contractors, equipment vendors, and suppliers). Contractor shall update Progress Schedule on a monthly basis to depict accurately the actual progress of Work and for evaluating and preparing Contractor's monthly progress payments. Contractor's failure to submit and maintain an acceptable Progress Schedule may, in Owner's discretion, and without limiting the materiality of Contractor's other obligations under the Contract Documents, constitute grounds to declare Contractor in material breach of the Contract Documents.
2. Within 21 Days after issuance of Notice to Proceed, a preliminary schedule of Submittals that shall list each required Submittal and the times for submitting, reviewing and processing such Submittal, as required by Section 01330 (Submittal Procedures). If no such schedule is agreed upon, then all Submittals shall be completed and submitted within 35 Days after the Notice of Award.
3. Within 21 Days after issuance of Notice to Proceed, a preliminary Schedule of Values for all the Work which shall include quantities and prices of items aggregating the Contract Sum and shall subdivide each Schedule of Values into component activities in sufficient detail to serve as the basis for progress payments during construction. Such Schedule of Values shall include an appropriate amount of overhead and profit applicable to each item of Work, a line item for Project Record Documents, and a line item for Project scheduling, and shall conform to Section 01200 (Price and Payment Procedures).

11.1.C. Unless otherwise provided in the Contract Documents, at least 15 Days before submission of the first Application for Payment, a conference attended by Contractor, Owner, and others as appropriate, will be held to review for acceptability the schedules submitted in accordance with paragraph 11.1.B of this Document 00700. Contractor shall have an additional seven Days to make corrections and adjustments and to complete and resubmit the schedules. Schedules shall be updated and completed as required by Sections 01200 (Price and Payment Procedures), 01320 (Progress Schedules and Reports) and 01330 (Submittal Procedures). No progress payment shall be due or owing to Contractor until the schedules are submitted to and acceptable to Owner or Engineer or both as meeting the requirements of the Contract Documents, including Sections 01200 (Price and Payment Procedures), 01320 (Progress Schedules and Reports) and 01330 (Submittal Procedures). Owner's acceptance of

Contractor's schedules will not create any duty of care or impose on Owner any responsibility for the sequencing, scheduling, or progress of Work, nor will it interfere with or relieve Contractor from Contractor's full responsibility therefor.

11.1.D. Before commencing any portion of Work, Contractor shall inform Owner in writing as to time and place at which Contractor wishes to commence Work, and nature of Work to be done, in order that proper provision for inspection of Work may occur, and to assure measurements necessary for record and payment. Information shall be given to Owner a reasonable time in advance of time at which Contractor proposes to begin Work, so that Owner may complete necessary preliminary work without inconvenience or delay to Contractor.

11.1.E. Contractor shall submit Submittals to Owner (or Engineer if Owner so designates) for review in strict accordance with Section 01330 (Submittal Procedures). Submission of a Submittal shall constitute Contractor's representation that all requirements of Section 01330 (Submittal Procedures) have been complied with. All Submittals will be identified as Owner may require and in the number of copies specified in Section 01330 (Submittal Procedures).

11.1.F. Contractor shall not perform Work that requires submission of a Submittal prior to submission and favorable review of the Submittal. Where a Submittal is required by Contract Documents or the final Schedule of Submittals accepted by Owner, any related Work performed prior to Owner's approval of the pertinent Submittal shall be at the sole expense, responsibility, and risk of Contractor.

11.2 Cost Data

11.2.A. Contractor shall maintain full and correct information as to the number of workers employed in connection with each subdivision of Work, the classification and rate of pay of each worker in the form of certified payrolls, the cost to Contractor of each class of materials, tools, and appliances used by Contractor in Work, and the amount of each class of materials used in each subdivision of Work. Contractor shall provide Owner with copies of certified payrolls every 2 weeks. If Contractor maintains or is capable of generating summaries or reports comparing actual Project costs with Bid estimates or budgets, Contractor shall provide Owner with a copy of such report upon Owner's request and whenever it is generated.

11.2.B. Contractor shall maintain daily job reports recording all significant activity on the job, including the number of workers on Site, Work activities, problems encountered, and delays. Contractor shall provide Owner with copies for each Day Contractor works on the Project, to be delivered to Owner either the same Day or the following morning before starting Work at the Site. Contractor shall take monthly progress photographs of all areas of the Work. Contractor shall maintain copies of all correspondence with Subcontractors and records of meetings with Subcontractors.

11.2.C. Owner shall have the right to audit and copy Contractor's books and records of any type, nature, or description relating to the Project (including but not limited to financial records reflecting in any way costs claimed on the Project), and to inspect the Site, including Contractor's trailer, or other job Site office, and this requirement shall be contained in the subcontracts of Subcontractors working on Site. By way of example, Owner shall have the right to inspect and obtain copies of all Contract Documents, planning and design documents, Bid proposal and negotiation documents (subject to Document 00670 [Escrow Bid Documents]), cost records and job cost variance reports,

design modification proposals, value engineering or other cost reduction proposals, revisions made to the original design, job Progress Reports, photographs, and as-built drawings maintained by Contractor. Owner and any other applicable governmental entity shall have the right to inspect all information and documents maintained under this paragraph 11.2 at any time during the Project and for a period of five years following Substantial Completion. This right of inspection shall not relieve Contractor of its duties and obligations under the Contract Documents. This right of inspection shall be specifically enforceable in a court of law, either independently or in conjunction with enforcement of any other rights in the Contract Documents.

11.2.D. Contractor shall maintain in a safe place at the Site one record copy of all Drawings, Specifications, Addenda, Contract Modifications, Change Orders, Work Directives, Force Account orders, and written interpretations and clarifications in good order and annotated to show all changes made during construction. These Project Record Documents, together with all approved Samples and a counterpart of all approved Shop Drawings, shall be maintained and available to Owner for reference. Upon completion of the Work, Contractor shall deliver to Owner, the Project Record Documents.

12. CLAIMS BY CONTRACTOR

12.1 General

12.1.A. Contract Interpretation Disputes: Should it appear to Contractor that Work to be performed or any of the matters relative to Contract Documents (including without limitation Drawings or Specifications) are not satisfactorily detailed or explained therein, or should any questions arise as to the meaning or intent of Contract Documents (including without limitation Drawings or Specifications), Contractor shall give written notice to Owner. Contractor shall bear all costs incurred in giving notice. Owner will render a determination regarding the issue, which shall be final. If Contractor disagrees with Owner's decision, Contractor's sole and exclusive remedy is to file a claim in accordance with this Article 12. Contractor shall diligently prosecute the Disputed Work (as defined below) to Final Completion pending resolution of any claim.

12.1.B. Work Disputes: Contractor shall give written notice to Owner of any dispute arising under the Contract Documents respecting the true value of any Work performed, the implementation of Work required by Contract Documents, any Work omitted, any extra Work that Contractor may be required to perform or time extensions, respecting the size of any payment to Contractor during the performance of Contract Documents, or of compliance with Contract Documents procedures. Owner will render a determination regarding the issue, which shall be final. If Contractor disagrees with Owner's decision, Contractor's sole and exclusive remedy is to file a claim in accordance with this Article 12. Pending the resolution of any claim, Contractor shall diligently prosecute the Disputed Work to Final Completion.

12.1.C. The claim notice and documentation procedure described in this Article 12 shall constitute a mandatory non-judicial settlement procedure and shall apply to all claims and disputes arising under the Contract Documents, including without limitation any claim or dispute by any Subcontractor or material supplier. All Subcontractor and supplier claims of any type shall be brought only through Contractor as provided in

this Article 12. Under no circumstances shall any Subcontractor or supplier make any direct claim against Owner.

12.1.D. "Claim" means a written demand or written assertion by Contractor seeking, as a matter of right, the payment of money, the adjustment or interpretation of Contract Documents terms, or other relief arising under or relating to Contract Documents. In order to qualify as a "claim," the written demand must state that it is a claim submitted under this Article 12.

12.1.E. A voucher, invoice, proposed change, Application for Payment, or other routine or authorized form of request for payment is not a claim under the Contract Documents. If such request is disputed as to liability or amount, then the disputed portion of the submission may be converted to a claim under the Contract Documents by submitting a separate claim in compliance with claim submission requirements.

12.1.F. The provisions of this Article 12 survive termination, breach, or completion of the Contract Documents. Contractor shall bear all costs incurred in the preparation and submission of a claim.

12.2 Procedure

12.2.A. Should any clarification, determination, action or inaction by Owner or Engineer, Work, or any other event, in the opinion of Contractor, exceed the requirements of or not comply with Contract Documents, or otherwise result in Contractor seeking additional compensation in time or money for any reason (collectively "Disputed Work"), then Contractor and Owner will make good faith attempts to resolve informally any and all such issues, claims and/or disputes. Before commencing the Disputed Work, or within seven Days after Contractor's first knowledge of the Disputed Work, whichever is earlier, Contractor shall file a written notice and cost proposal for the Disputed Work with Owner stating clearly and in detail its objection and reasons for contending the Work or interpretation is outside the requirements of Contract Documents. If a written notice and cost proposal for Disputed Work is not issued within this time period, or if Contractor proceeds with the Disputed Work without first having given the notice required by this paragraph 12.2.A, Contractor shall waive its rights to further claim on the specific issue.

12.2.B. Owner will review Contractor's timely notice and cost proposal for Disputed Work and provide a decision. If, after receiving the decision, Contractor disagrees with it or still considers the Work required of it to be outside of the requirements of Contract Documents, it shall so notify Owner, in writing, within seven Days after receiving the decision, by submitting a notice of potential claim, stating that a formal claim will be issued. Within 30 Days of receiving the decision, Contractor shall submit its claim in the form specified herein and all arguments, justification, cost or estimates, schedule analysis, and detailed documentation supporting its position. Contractor's failure to furnish notification within seven Days and all justifying documentation within 30 Days will result in Contractor waiving its right to the subject claim. If Disputed Work persists longer than 30 Days, then Contractor shall, every 30 Days until the Disputed Work ceases, submit to Owner a document titled "Claim Update" that shall update and quantify all elements of the claim as completely as possible. Contractor's failure to submit a Claim Update or to quantify costs every 30 Days shall result in waiver of the claim for that 30-Day period. Claims or Claim Updates stating that damages, total damages (direct and indirect), schedule input and/or any time extension will be

determined at a later date shall not comply with this paragraph 12.2.B and shall result in Contractor waiving its claim(s).

12.2.C. Upon receipt of Contractor's formal claim including all arguments, justifications, cost or estimates, schedule analysis, and all other documentation supporting its position as required herein, Owner or its designee will review the issue and render a final determination. Owner may in its discretion first conduct an administrative hearing on the claim, in which event Contractor shall appear and provide further substantiating information and documents if requested by Owner.

12.2.D. Claims shall be calculated in the same manner as Change Orders per Section 01250 (Modification Procedures). EXCEPT WHERE PROVIDED BY LAW, OR ELSEWHERE IN THESE CONTRACT DOCUMENTS (IF APPLICABLE), OWNER SHALL NOT BE LIABLE FOR SPECIAL OR CONSEQUENTIAL DAMAGES, AND CONTRACTOR SHALL NOT INCLUDE THEM IN ITS CLAIMS. CONTRACTOR SHALL BE LIMITED IN ITS RECOVERY ON CLAIMS TO THE CHANGE ORDER CALCULATIONS SET FORTH IN SECTION 01250 (MODIFICATION PROCEDURES).

12.3 Claim Format

12.3.A. Contractor shall submit the claim justification in the following format:

1. Cover letter and certification under penalty of perjury of the accuracy of the claim;
2. Summary of claim, including underlying facts, entitlement, schedule analysis, quantum calculations, Contract provisions supporting relief;
3. List of documents relating to claim including Specifications, Drawings, clarifications/requests for information, schedules, notices of delay, and any others;
4. Chronology of events and correspondence;
5. Analysis of claim merit;
6. Analysis of claim cost; and
7. Attach supporting documents referenced in paragraph 12.3.A.3.

12.4 Mediation

12.4.A. All Contractor claims not subject to the claim resolution procedures set forth in Section 01410 (Regulatory Requirements) shall, as a condition precedent to litigation (or if otherwise permitted by the Contract Documents, arbitration) thereon, first be mediated. Mediation shall be non-binding and utilize the services of a mediator mutually acceptable to the parties and, if the parties cannot agree, a mediator selected by the American Arbitration Association from its panel of approved mediators trained in construction industry mediation. Except as provided below in Section 12.7, all statutes of limitation shall be tolled from the date of the demand for mediation until a date two weeks following the mediation's conclusion. All unresolved Contractor claims shall be submitted to the same mediator. The cost of mediation shall be equally shared.

12.5 Subcontractor Claims

12.5.A. Contractor shall present as its claims all Subcontractor, sub-Subcontractor and supplier claims of any type, and prove them under the terms of the Contract Documents. Owner shall not be directly liable to any Subcontractor, any supplier, or any other person or organization, or to any surety for or employee or agent of any of them, for damages or extra costs of any type arising out of or resulting from the Project.

12.6 Exclusive Remedy

12.6.A. Contractor's performance of its duties and obligations specified in this Article 12 and administration of a claim as provided in this Article 12 is Contractor's sole and exclusive remedy for disputes of all types pertaining to the payment of money, extension of time, the adjustment or interpretation of the Contract Documents terms or other contractual or tort relief arising from Contract Documents. This exclusive remedy and the limitation of liability (expressed herein and elsewhere throughout the Contract Documents) apply notwithstanding the completion, termination, suspension, cancellation, breach, or rescission of the Work or Contract Documents, negligence or strict liability by Owner, its representatives, consultants, or agents, or the transfer of Work or the Project to Owner for any reason whatsoever. Contractor waives and covenants not to raise any claims of waiver, estoppel, release, bar, or any other type of excuse for non-compliance with these Article 12 claim submission, administration, and mediation requirements. Compliance with the claim submission, administration, and mediation procedures described in this Article 12 is a condition precedent to the right to file a Government Code Claim, commence litigation or commence any other legal action. Claim(s) or issue(s) not raised in a timely protest and timely claim submitted under this Article 12 may not be asserted in any subsequent Government Code Claim, litigation or legal action. Owner shall not be deemed to waive any provision under this Article 12, if at Owner's sole discretion, a claim is administered in a manner not in accord with this Article 12.

12.7 Final Claim Disposition

12.7.A. If the Contractor's claims submitted in accordance with this Article 12 at Project completion total $375,000 or less, then claims resolution shall proceed in the manner prescribed by Article 1.5, Chapter 1, Part 3 of Division 2 of the California Public Contract Code. If such claims exceed $375,000, then Contractor shall prepare a compendium of claims submitted and not resolved as a result of these procedures, and submit them in a Govt. Code Section 910 form of claim for final investigation and consideration of their settlement prior to initiation of any litigation thereon, as required by Government Code Section 945.4. Pursuant to Government Code Section 930.2, the one-year period in Government Code Section 911.2 shall be reduced to 90 days.

13. LEGAL AND MISCELLANEOUS

13.1 Laws And Regulations

13.1.A. Contractor shall keep fully informed of and shall comply with all laws, ordinances, regulations, and orders of any properly constituted authority affecting the Contract Documents, Work and persons connected with Work, and shall protect and indemnify Owner and its officers, employees, consultants, and agents against any claim or liability, including attorneys' fees, arising from or based on violation of law, ordinance, regulation or order, whether by Contractor or by Subcontractors, employees, or agents. Authorized persons may at any time enter upon any part of Work to ascertain compliance of all applicable laws, ordinances, regulations and orders.

13.1.B. Whenever Drawings and Specifications require larger sizes or higher standards than are required by any applicable law, ordinance, regulation, or order, Drawings and Specifications shall govern. Whenever Drawings and Specifications require something

that will violate such laws, ordinances, regulations, or orders, then such laws, ordinances, regulations, or orders shall govern.

13.2 Permits And Taxes

13.2.A. Contractor shall procure all permits and licenses applicable to the Work (including environmental matters to the extent applicable); pay all charges and fees, including building permits, fees for street opening permits; comply with, implement, and acknowledge effectiveness of all permits; initiate and cooperate in securing all required notifications or approvals therefore; and give all notices necessary and incident to due and lawful prosecution of Work, unless otherwise provided herein. Owner will pay applicable, school, sanitation, and water fees for the completed construction. Contractor shall pay all sales and/or use taxes levied on materials, supplies, or equipment purchased and used on or incorporated into Work, and all other taxes properly assessed against equipment or other property used in connection with Work, without any increase in the Contract Sum. Contractor shall make necessary arrangements with proper authorities having jurisdiction over roads, streets, pipelines, navigable waterways, railroads, and other works in advance of operations, even where Owner may have already obtained permits for the Work.

13.3 Responsibility Of Contractor And Indemnification

13.3.A. Owner and each of its officers, employees, consultants, and agents including, but not limited to, the Board, Engineer, and each Owner's Representative, shall not be liable or accountable in any manner for loss or damage that may happen to any part of the Work; loss or damage to materials or other things used or employed in performing the Work; injury, sickness, disease, or death of any person; or damage to property resulting from any cause whatsoever except their sole negligence, willful misconduct or active negligence, attributable to performance or character of the Work, and Contractor releases all of the foregoing persons and entities from any and all such claims.

13.3.B. To the furthest extent permitted by law (including without limitation California Civil Code Section 2782), Contractor shall assume defense of, and indemnify and hold harmless, Owner and each of its officers, employees, consultants, and agents, including but not limited to, the Board, Engineer, and each Owner's Representative, from claims, suits, actions, losses and liability of every kind, nature and description, including but not limited to claims and fines of regulatory agencies and attorneys' fees and consultants' fees, directly or indirectly arising out of, connected with or resulting from performance of the Work, failure to perform the Work, or condition of the Work which is caused in whole or part by any act or omission of Contractor, Subcontractors, anyone directly or indirectly employed by any of them or anyone for whose acts any of them may be liable, regardless of whether it is caused in part by the negligence of Owner or by any person or entity required to be indemnified hereunder.

13.3.C. With respect to third-party claims against Contractor, Contractor waives any and all rights to any type of express or implied indemnity against Owner and each of its officers, employees, consultants, and agents including, but not limited to, Owner, the Board, Engineer and each Owner's Representative.

13.3.D. Approval or purchase of any insurance contracts or policies shall in no way relieve from liability nor limit the liability of Contractor, its Subcontractors of any tier, or the officers or agents of any of them.

13.3.E. To the furthest extent permitted by law (including, without limitation, Civil Code Section 2782), the indemnities, releases of liability and limitations of liability, claims procedures, and limitations of remedy expressed throughout Contract Documents shall apply even in the event of breach of Contract, negligence (active or passive), fault or strict liability of the party(ies) indemnified, released, or limited in liability, and shall survive the termination, rescission, breach, abandonment, or completion of the Work or the terms of the Contract Documents. If Contractor fails to perform any of these defense or indemnity obligations, Owner may in its discretion back charge Contractor for Owner's costs and damages resulting therefrom and withhold such sums from progress payments or other Contract moneys which may become due.

13.3.F. The indemnities in the Contract Documents shall not apply to any indemnified party to the extent of its sole negligence or willful misconduct; nor shall they apply to Owner or other indemnified party to the extent of its active negligence.

13.4 Concealed Or Unknown Conditions

13.4.A. If either of the following conditions is encountered at Site when digging trenches or other excavations that extend deeper than four feet below the surface, Contractor shall give a written Notice of Differing Site Conditions to Owner promptly before conditions are disturbed, except in an emergency as required by paragraph 16.4 of this Document 00700, and in no event later than seven Days after first observance of:

1. Subsurface or Latent physical conditions which differ materially from those indicated in the Contract Documents; or
2. Unknown physical conditions of an unusual nature or which differ materially from those ordinarily encountered and generally recognized as inherent in work of the character provided for in the Contract Documents.

13.4.B. In response to Contractor's Notice of Differing Site Conditions under paragraph 13.4.A, Owner will investigate the identified conditions, and if they differ materially and cause increase or decrease in Contractor's cost of, or time required for, performance of any part of the Work, Owner will issue either a Request for Proposal or a Construction Change Directive under the procedures described in the Contract Documents, including without limitation Section 01250 (Modification Procedures). If Owner determines that physical conditions at the Site are not Latent or are not materially different from those indicated in Contract Documents or that no change in terms of the Contract Documents is justified, Owner will so notify Contractor in writing, stating reasons (with Contractor retaining its rights under Article 12 of this Document 00700).

13.4.C. Contractor shall not be entitled to any adjustment in the Contract Sum or Contract Time regarding claimed Latent or materially different Site conditions (whether above or below grade) if:

1. Contractor knew of the existence of such conditions at the time Contractor submitted its Bid; or
2. Contractor should have known of the existence of such conditions as a result of having complied with the requirements of Contract Documents, including without limitation paragraphs 2.1 and 8.4 of this Document 00700; or
3. The information or conditions claimed by Contractor to be Latent or materially different consist of information, conclusions, opinions, or deductions of the kind that paragraph 2.1 of this Document 00700 precludes reliance upon; or

4. Contractor was required to give written Notice of Differing Site Conditions and failed to do so within the time required.

13.4.D. If Owner and Contractor are unable to agree on entitlement to or as to the amount or length of any adjustment in the Contract Sum or Contract Time required under this paragraph 13.4, Contractor shall proceed with the Work as directed by Owner and may make a claim as provided in Article 12 of this Document 00700.

13.5 Notice Of Hazardous Waste Or Materials Conditions

13.5.A. Contractor shall give a written Notice of Hazardous Materials Condition to Owner promptly, before any of the following conditions are disturbed (except in an emergency as required by paragraph 16.4 of this Document 00700), and in no event later than 24 hours after first observance of any:

1. Material that Contractor believes may be hazardous waste or hazardous material, as defined in Section 25117 of the Health and Safety Code (including, without limitation, Asbestos, lead, PCBs, petroleum and related hydrocarbons, and radioactive material) that is required to be removed to a Class I, Class II, or Class III disposal site in accordance with provisions of existing law ("hazardous material"); or
2. Other material that may present an imminent substantial danger to persons or property exposed thereto in connection with Work at the Site ("other materials").

13.5.B. Except as otherwise provided in the Contract Documents or as provided by applicable law, Contractor shall not be required to give any notice for the disturbance or observation of any such hazardous materials or other materials where such matter is disturbed or observed as part of the scope of Work under the Contract Documents (such as hazardous waste or hazardous material investigation, remediation or disposal activities which are identified as the subject of Work under the Contract Documents), where Contractor complies with all requirements in the Contract Documents and applicable law respecting such materials.

13.5.C. Contractor's Notice of Hazardous Materials Condition shall indicate whether the hazardous materials or other materials were shown or indicated in the Contract Documents to be within the scope of Work, and whether the hazardous materials or other materials were brought to the Site by Contractor, its Subcontractors, suppliers, or anyone else for whom Contractor is responsible.

13.5.D. Contractor shall not be entitled to any adjustment in the Contract Sum or Contract Time regarding claimed hazardous waste or materials if:

1. Contractor knew of the existence of such hazardous materials or other materials at the time Contractor submitted its Bid; or
2. Contractor should have known of the existence of such hazardous material or other materials as a result of its having the responsibility to obtain additional or supplementary examinations, investigation, explorations, tests, studies, and data concerning the conditions at or contiguous to the Site prior to submitting its Bid; or
3. Contractor failed to give the written notice within the time required by paragraph 13.5.A of this Document 00700.

13.5.E. If Owner determines that conditions involve hazardous materials or other materials and that a change in Contract Document terms is justified, Owner will issue either a Request for Proposal or Construction Change Directive under the procedures described in the Contract Documents, including without limitation Section 01250

(Modification Procedures). If Owner determines that conditions do not involve hazardous materials or other materials or that no change in Contract Document terms is justified, Owner will notify Contractor in writing, stating the reasons for its determination.

13.5.F. In addition to the parties' other rights under paragraph 13.5.E of this Document 00700, if Contractor does not agree to resume Work based on a reasonable belief that it is unsafe, or does not agree to resume Work under special conditions, Owner may order the disputed portion of Work deleted from the Work, or performed by others, or Owner may invoke its right to terminate Contractor's right to proceed under the Contract Documents in whole or in part, for convenience or for cause as the facts may warrant.

13.5.G. If Contractor does not agree with any Owner determination of any adjustment in the Contract Sum or Contract Time under this paragraph 13.5, Contractor may make a claim as provided in Article 12 of this Document 00700.

13.6 Suspension Of Work

13.6.A. Owner may, without cause, order Contractor in writing to suspend, delay or interrupt Work in whole or in part for such period of time as Owner may determine. An adjustment shall be made for increases in cost of performance of Work of the Contract Documents caused by any such suspension, delay or interruption, calculated using the measures set forth in Section 01250 (Modification Procedures). No adjustment shall be made to extent that:

1. Performance is, was or would have been so suspended, delayed or interrupted by another cause for which Contractor is responsible; or
2. An equitable adjustment is made or denied under any other provision of Contract Documents; or
3. The suspension of Work was the direct or indirect result of Contractor's failure to perform any of its obligations hereunder. Adjustments made in cost of performance may have a mutually agreed fixed or percentage fee; if the parties cannot agree, Contractor may file a claim under Article 12 of this Document 00700.

13.7 Termination Of Contract For Cause

13.7.A. Owner may declare Contractor in default of Contract Documents and Owner may terminate Contractor's right to proceed under the Contract Documents for cause:

1. Should Contractor make an assignment for the benefit of creditors; admit in writing its inability to pay its debts as they become due; file a voluntary petition in bankruptcy; be adjudged a bankrupt or insolvent; be the subject of an involuntary petition in bankruptcy which is not dismissed within 60 Days; file a petition or answer seeking for itself any reorganization, arrangement, composition, readjustment, liquidation, dissolution, or similar relief under any present or future statute, law, or regulation; file any answer admitting or not contesting the material allegations of a petition filed against Contractor in any such proceeding; or seek, consent to, or acquiesce in, the appointment of any trustee, receiver, custodian or liquidator of Contractor or of all or any substantial part of its properties or if Contractor, its directors or shareholders, take action to dissolve or liquidate Contractor; or
2. Should Contractor commit a material breach of the Contract Documents. If Owner declares Contractor in default due to material breach, however, Owner must allow

Contractor an opportunity to cure such breach within ten Days of the date of notice from Owner to Contractor providing notice of the default; or, if such breach is curable but not curable within such ten-Day period, within such period of time as is reasonably necessary to accomplish such cure. (In order for Contractor to avail itself of a time period in excess of ten Days, Contractor must provide Owner within the ten-Day period with a written plan acceptable to Owner to cure said breach which includes, for example, evidence of necessary resources, Subcontractor commitments, schedules and recovery schedules meeting Contract Document requirements and showing a realistic and achievable plan to cure the breach. Contractor must then diligently commence and continue such cure according to the written plan); or

3. Should Contractor violate or allow (by a Subcontractor or other person or entity for which Contractor is responsible) a violation of any valid law, statute, regulation, rule, ordinance, permit, license or order of any governmental agency applicable to the Project or Work and does not cure (or cause to be cured) such violation within ten Days of the date of the notice from Owner to Contractor demanding such cure; or, if such violation is curable but not curable within such ten-Day period, within such period of time as is reasonably necessary to accomplish such cure. (In order for Contractor to avail itself of a time period in excess of ten Days, Contractor shall provide Owner within the ten-Day period with a written plan to cure said violation acceptable to Owner, and then diligently commence and continue performance of such cure according to the written plan.)

13.7.B. If Owner at any time reasonably believes that Contractor is or may be in default under the Contract Documents as provided in paragraph 13.7.A of this Document 00700, Owner may in its sole discretion notify Contractor of this fact and request written assurances from Contractor of performance of Contract Documents and a written plan from Contractor to remedy any default under the terms of Contract Documents which Owner may advise Contractor of in writing. Contractor shall, within 10 Days of Owner's request, deliver a written cure plan which meets the requirements of the written plan deliverable under paragraph 13.7.A.2 of this Document 00700. Failure of Contractor to provide such written assurances of performance and the required written plan, within ten Days of request, will constitute a material breach of Contract Documents sufficient to justify termination for cause.

13.7.C. In event of termination for cause, Owner will immediately serve written notice thereof upon Surety and Contractor. Surety shall have the rights and obligations set forth in Document 00611 (Construction Performance Bond). Subject to the Surety's rights under the Performance Bond (which rights are waived upon a default thereunder), Owner may take over the Work and prosecute it to completion by contract or by any other methods it may deem advisable.

13.7.D. In the event of termination by Owner as provided in paragraph 13.7.A of this Document 00700 for cause:

1. Owner will compensate Contractor for the value of the Work delivered to Owner upon termination as determined in accordance with the Contract Documents, subject to all rights of offset and back charges, and provided that Contractor provides Owner with updated as-builts and Project Record Documents showing the Work performed up to the date of termination. However, Owner will not compensate Contractor for its costs in terminating the Work or any cancellation charges owed to third parties.

2. Contractor shall deliver to Owner possession of the Work in its then condition including, but not limited to, all designs, engineering, Project records, Project Record Documents, cost data of all types, Drawings and Specifications and contracts with vendors and Subcontractors, all other documentation associated with the Project, and all construction supplies and aids dedicated solely to performing the Work which, in the normal course of construction, would be consumed or only have salvage value at the end of the construction period. Contractor shall remain fully liable for the failure of any Work completed and materials and equipment provided through the date of such termination to comply with the provisions of the Contract Documents. The provisions of this paragraph 13.7.D shall not be interpreted to diminish any right which Owner may have to claim and recover damages for any breach of Contract Documents or otherwise, but rather, Contractor shall compensate Owner for all loss, cost, damage, expense, and/or liability suffered by Owner as a result of such termination and failure to comply with Contract Documents.
3. Owner's rights under paragraph 13.7.D.2 shall be specifically enforceable to the greatest extent permitted by law. Owner shall, to the extent applicable, have all other rights and remedies set forth in any Bidding Document.

13.7.E. Owner may terminate portions or parts of the Work for cause, provided these portions or parts (1) have separate geographic areas from parts or portions of the Work not terminated or (2) are limited to the Work of one or more specific trades or Subcontractors. In such case, Contractor shall cooperate with a competing contractor as required under Article 6 of this Document 00700.

13.7.F. In the event a termination for cause is determined to have been made wrongfully or without cause, then the termination shall be treated as a termination for convenience, and Contractor shall have no greater rights than it would have had following a termination for convenience. Any Contractor claim arising out of a termination for cause shall be made in accordance with the provisions of the Contract Documents on claims and calculated in accordance with the provisions of the Contract Documents on Change Orders and claims. No other loss cost, damage, expense or liability may be claimed, requested or recovered by Contractor.

13.8 Termination Of Contract For Convenience

13.8.A. Owner may terminate performance of the Work under the Contract Documents in accordance with this clause in whole, or from time to time in part, whenever Owner shall determine that termination is in Owner's best interest. Termination shall be effected by Owner delivering to Contractor notice of termination specifying the extent to which performance of the Work under the Contract Documents is terminated and the effective date of the termination.

13.8.B. After receiving a notice of termination under paragraph 13.8.A of this Document 00700, and except as otherwise directed by Owner, Contractor shall:

1. Stop Work under the Contract Documents on date and to extent specified in notice of termination;
2. Place no further orders or subcontracts for materials, services, or facilities except as necessary to complete portion of Work under the Contract Documents which is not terminated;
3. Terminate all orders and subcontracts to extent that they relate to performance of Work terminated by the notice of termination;

4. Assign to Owner in manner, at times, and to extent directed by Owner, all right, title, and interest of Contractor under orders and subcontracts so terminated. Owner shall have the right, in its sole discretion, to settle or pay any or all claims arising out of termination of orders and subcontracts;
5. Settle all outstanding liabilities and all claims arising out of such termination of orders and subcontracts, with approval or ratification of Owner to extent Owner may require. Owner's approval or ratification shall be final for purposes of this paragraph 13.8;
6. Transfer title to Owner, and deliver in the manner, at the times, and to the extent, if any, directed by Owner, all fabricated or unfabricated parts, Work in process, completed Work, supplies, and all other material produced as part of, or acquired in connection with performance of, Work terminated by the notice of termination, and completed or partially completed drawings, drawings, specifications, information, and other property which, if the Project had been completed, would have been required to be furnished to Owner;
7. Use its best efforts to sell, in manner, at times, to extent, and at price or prices that Owner directs or authorizes, any property of types referred to in paragraph 13.8.B.6 of this Document 00700, but Contractor shall not be required to extend credit to any purchaser, and may acquire any such property under conditions prescribed and at price or prices approved by Owner. Proceeds of transfer or disposition shall be applied to reduce payments to be made by Owner to Contractor under the Contract Documents or shall otherwise be credited to the price or cost of Work covered by Contract Documents or paid in such other manner as Owner may direct;
8. Complete performance of the part of the Work which was not terminated by the notice of termination; and
9. Take such action as may be necessary, or as Owner may direct, to protect and preserve all property related to Contract Documents which is in Contractor's possession and in which Owner has or may acquire interest.

13.8.C. After receipt of a notice of termination under paragraph 13.8.A of this Document 00700, Contractor shall submit to Owner its termination claim, in form and with all certifications required by Article 12 of this Document 00700. Contractor's termination claim shall be submitted promptly, but in no event later than 6 months from effective date of the termination. Contractor and Owner may agree upon the whole or part of the amount or amounts to be paid to Contractor because of a total or partial termination of Work under this paragraph 13.8. If Contractor and Owner fail to agree on the whole amount to be paid to Contractor because of the termination of the Work under this paragraph 13.8, Owner's total liability to Contractor by reason of the termination shall be the total (without duplication of any items) of:

1. The reasonable cost to Contractor, without profit, for all Work performed prior to the effective date of the termination, including Work done to secure the Project for termination. Reasonable cost may not exceed the applicable percentage completion values derived from the Progress Schedule and the Schedule of Values. Deductions shall be made for cost of materials to be retained by Contractor, cost of Work defectively performed, amounts realized by sale of materials, and for other appropriate credits against cost of Work. Reasonable cost will include reasonable allowance for Project overhead and general administrative overhead not to exceed a total of ten percent of direct costs of such Work. When, in Owner's opinion, the

cost of any item of Work is excessively high due to costs incurred to remedy or replace Defective or rejected Work, reasonable cost to be allowed will be the estimated reasonable cost of performing the Work in compliance with requirements of Contract Documents and excessive actual cost shall be disallowed.

2. A reasonable allowance for profit on cost of Work performed as determined under paragraph 13.8.C.1 of this Document 00700, provided that Contractor establishes to Owner's satisfaction that Contractor would have made a profit had the Project been completed, and provided further that the profit allowed shall not exceed 5 percent of cost.
3. Reasonable costs to Contractor of handling material returned to vendors, delivered to Owner or otherwise disposed of as directed by Owner.
4. A reasonable allowance for Contractor's internal administrative costs in preparing termination claim.
5. Except as provided in this paragraph 13.8.C of this Document 00700, Owner shall not be liable for costs incurred by Contractor or Subcontractors after receipt of a notice of termination. Such non-recoverable costs include, but are not limited to, anticipated profits on Work not performed as of the date of termination, post-termination employee salaries, post-termination general administrative expenses, post-termination overhead or unabsorbed overhead, costs of preparing and submitting Contractor's Bid, attorneys' fees of any type, and all costs relating to prosecution of claim or lawsuit.
6. Owner shall have no obligation to pay Contractor under this paragraph 13.8 unless and until Contractor provides Owner with updated and acceptable as-builts and Project Record Documents for Work completed prior to termination.

13.8.D. In arriving at the amount due Contractor under this clause, there shall be deducted:

1. All unliquidated advances or other payments on account previously made to Contractor which are applicable to the terminated portion of Contract Documents;
2. Any claim which Owner may have against Contractor in connection with Contract Documents; and
3. The agreed price for, or proceeds of sale of, any materials, supplies, or other things kept by Contractor or sold under provisions of this paragraph 13.8, and not otherwise recovered by or credited to Owner.

13.9 Contingent Assignment Of Subcontracts

13.9.A. Contractor hereby assigns to Owner each Subcontract for a portion of the Work, provided that:

1. The assignment is effective only after Owner's termination of Contractor's right to proceed under the Contract Documents (or portion thereof relating to that Subcontract) pursuant to paragraphs 13.7 or 13.8 of this Document 00700.
2. The assignment is effective only for the Subcontracts which Owner expressly accepts by notifying the Subcontractor in writing;
3. The assignment is subject to the prior rights, if any, of the Surety, obligated by Document 00611 (Construction Performance Bond) provided under the Contract Documents, where the Surety exercises its rights to complete the Contract;
4. After the effectiveness of an assignment, Contractor shall, at its sole cost and expense (except as otherwise provided in paragraphs 13.7 or 13.8 of this Document 00700), sign all instruments and take all actions reasonably requested by Owner to evidence and confirm the effectiveness of the assignment in Owner; and

5. Nothing in this paragraph 13.9 shall modify or limit any of Contractor's obligations to Owner arising from acts or omissions occurring before the effectiveness of any Subcontract assignment, including but not limited to all defense, indemnity and hold-harmless obligations arising from or related to the assigned Subcontract.

13.10 Remedies and Contract Integration

13.10.A. Subject to Contract Documents provisions regarding Contractor claims, claim review, and claim resolution, and subject to the limitations therein, the exclusive jurisdiction and venue for resolving all claims, counter-claims, disputes and other matters in question between Owner and Contractor arising out of or relating to Contract Documents, any breach thereof or the Project shall be the applicable court of competent jurisdiction located in the State of California, County of Sonoma. All Owner remedies provided in the Contract Documents shall be taken and construed as cumulative and not exclusive; that is, in addition to each and every other remedy herein provided; and in all instances Owner shall have any and all other equitable and legal rights and remedies which it would have according to law.

13.10.B. The Contract Documents, any Contract Modifications, and Change Orders shall represent the entire and integrated agreement between Owner and Contractor regarding the subject matters hereof and thereof and shall constitute the exclusive statement of the terms of the parties' agreement. The Contract Documents, and any Contract Modifications and Change Orders, shall supersede any and all prior negotiations, representations or agreements, written or oral, express or implied, that relate in any way to the subject matter of the Contract Documents or written Modifications. Owner and Contractor represent and agree that, except as otherwise expressly provided in the Contract Documents, they are entering into the Contract Documents and any subsequent written Modification in sole reliance upon the information set forth or referenced in the Contract Documents or Contract Modifications and the parties are not and will not rely on any other information.

13.10.C. In any proceeding to enforce the Contract Documents, Contractor and Owner agree that the finder of fact shall receive detailed instructions on the meaning and operation of the Contract Documents, including their conditions, limitations of liability and remedies clauses, claims procedures and any other provisions impacting major defenses and theories of liability of the parties. Detailed findings of fact shall be requested, to verify Contract enforcement.

13.10.D. Either party's waiver of any breach or failure to enforce any of the terms, covenants, conditions or other provisions of the Contract Documents at any time shall not in any way affect, limit, modify or waive that party's right thereafter to enforce or compel strict compliance with every term, covenant, condition or other provision hereof, any course of dealing or custom of the trade or oral representations notwithstanding.

13.11 Patents

13.11.A. Fees or claims for any patented invention, article or arrangement that may be used upon or in any manner connected with performance of the Work or any part thereof shall be included in the Bid price for doing the Work. Contractor shall defend, indemnify and hold harmless Owner and each of its officers, employees, consultants and agents, including, but not limited to, the Board and each Owner's Representative, from all damages, claims for damages, costs or expenses in law or equity, including attorneys' fees, arising from or relating to any claim that any article supplied or to be

supplied under the Contract Documents infringes on the patent rights, copyright, trade name, trademark, service mark, trade secret or other intellectual property right of any person or persons or that the person or entity supplying the article does not have a lawful right to sell the same. Such costs or expenses for which Contractor agrees to indemnify and hold harmless the above indemnities include but are not limited to any and all license fees, whether such fees are agreed by any indemnitee or ordered by a court or administrative body of any competent jurisdiction.

13.12 Substitution For Patented And Specified Articles

13.12.A. Except as provided otherwise in Document 00200 (Instructions to Bidders) or in the Contract Documents, whenever in Specifications, material or process is designated by patent or proprietary name or by name of manufacturer, such designation shall be deemed to be used for purpose of facilitating description of material and process desired, and shall be deemed to be followed by the words "or Approved Equal" and Contractor may offer any substitute material or process that Contractor considers "equal" in every respect to that so designated and if material or process offered by Contractor is, in opinion of Owner, Equal in every respect to that so designated, its use will be approved. However, Contractor may utilize this right only by timely submitting Document 00660 (Substitution Request Form) as provided in Document 00200 (Instructions to Bidders). A substitution will be approved only if it is a true Equal item in every aspect of its design and quality, including but not limited to its dimensions, weights, service requirements, durability, functioning, impact on contiguous construction elements, overall schedule and design.

13.13 Interest Of Public Officers

13.13.A. No representative, officer, or employee of Owner, no member of the governing body of the locality in which the Project is situated, no member of the locality in which Owner was activated, and no other public official of such locality or localities who exercises any functions or responsibilities with respect to the Project, during the tenure of the official or for one year thereafter, shall, as principal, agent, attorney or otherwise, be directly or indirectly interested, in the Contract Documents or the proceeds thereof.

13.14 Limit Of Liability

13.14.A. OWNER, AND EACH OF ITS OFFICERS, BOARD MEMBERS, EMPLOYEES, CONSULTANTS AND AGENTS INCLUDING, BUT NOT LIMITED TO, ENGINEER AND EACH OTHER OWNER REPRESENTATIVE, SHALL HAVE NO LIABILITY TO CONTRACTOR FOR SPECIAL, CONSEQUENTIAL, OR INCIDENTAL DAMAGES, EXCEPT TO THE LIMITED EXTENT THAT THESE CONTRACT DOCUMENTS OR APPLICABLE PUBLIC CONTRACTING STATUTES MAY SPECIFY THEIR RECOVERY.

14. MODIFICATIONS OF CONTRACT DOCUMENTS

14.1 Alterations, Modifications And Force Account Work

14.1.A. No modification or deviation from the Drawings and Specifications will be permitted except by written Contract Modification.

14.1.B. Owner may, without notice to the sureties, make alterations, deviations, additions to, or deletions from Contract Documents; increase or decrease the quantity of any item or portion of the Work; expand, contract or otherwise change the Contract Time; delete

any item or portion of the Work; and require extra Work. Contractor shall perform such Work under applicable provisions of the Contract Documents, unless specifically provided otherwise at the time the change is ordered. In the case of any ordered extra Work, Owner reserves the right to furnish all or portions of associated labor, material, and equipment, which Contractor shall accept and use without payment for costs, markup, profit, or otherwise for such Owner-furnished labor, materials, and equipment.

14.1.C. Changes affecting the Contract Time or Contract Sum of the Work shall be set forth in a written Change Order that shall specify:

1. The Work performed in connection with the change to be made;
2. The amount of the adjustment of the Contract Sum, if any, and the basis for compensation for the Work ordered; and
3. The extent of the adjustment in the Contract Time, if any.

14.1.D. A Change Order will become effective when signed by Owner. If Owner exercises its right to decide disputed issues pertaining to changed Work as set forth in Articles 12 and 14 of this Document 00700, then the resulting Change Order shall be effective when signed by Owner, notwithstanding that Contractor has not signed it.

14.1.E. Changes not affecting the Contract Time or Contract Sum of the Work, in Owner's discretion, may be set forth in a written RFI-Reply executed by Owner. Execution of such an RFI-Reply constitutes Contractor's agreement to make the specified change without change to the Contract Sum or the Contract Time.

14.1.F. Changes or deviations from Contract Documents affecting the Contract Time or Contract Sum of the Work shall not be made without the authority of an effective Change Order or Construction Change Directive as provided in Section 01250 (Modification Procedures), except in cases of emergency discussed in Article 16 of this Document 00700.

14.1.G. If changes ordered in design, workmanship or materials are of such a nature as to increase or decrease the cost of any part of the Work, the price fixed in the Contract Documents shall be increased or decreased by the amount that Contractor and Owner may agree upon as a reasonable and proper allowance for the cost increase or decrease. If an agreement cannot be reached, then Owner will reach a determination, which shall be final, subject to Contractor's rights under Article 12 of this Document 00700. In all cases Contractor shall perform the changed Work as directed by Owner subject to Contractor's rights under Article 12 of this Document 00700.

14.1.H. Contractor shall, upon Owner's request, permit inspection of the original unaltered Bid estimate, subcontract agreements, purchase orders relating to the change, and documents substantiating all costs associated with its cost proposal or claims arising from changes in the Work.

14.1.I. Changes in the Work made pursuant to this Article 14 and extensions of Contract Time necessary by reason thereof shall not in any way release the guarantees and warranties given by Contractor pursuant to provisions of the Contract Documents, nor shall such changes in the Work relieve or release the Sureties of bonds executed pursuant to said provisions. The Sureties, in executing such bonds, shall be deemed to have expressly agreed to any such change in the Work and to any extension of time made by reason thereof.

14.1.J. Procedures for Modifications of Contract Documents and for calculating the cost of extra and deleted Work are given in Section 01250 (Modification Procedures). Regarding delay and impact costs of any nature, Contractor may not seek delay compensation for on-Site or off-Site costs based on formulas, e.g., "Eichlay" or other formula. Rather, Contractor shall prove actual costs resulting from such delays. If Contractor requests compensation for delay to the construction, then Contractor shall prove and document actual costs plus markup per the cost categories and procedures in Section 01250 (Modification Procedures) in order to request, claim or prove compensation for delay.

14.1.K. Owner's General Manager is authorized to approve Change Orders in accordance with Resolution No. 04-0547 dated June 8, 2004. The approval period for such Change Orders is approximately seven Days from receipt of the signed Change Order from Contractor. If a Change Order is equal to or greater than the amounts authorized by Resolution No. 04-0547, it may be necessary for the Board to approve the Change Order, and if so the approval period is approximately 28 Days from receipt of the signed Change Order from Contractor. A performance bond rider covering the changed Work must be executed and delivered to Owner before proceeding with the changed Work. Contractor is charged with knowledge of Owner's approved Change Order limits and procedures in effect at the applicable time.

15. TIME ALLOWANCES

15.1 Time Allowances For Performance Of Contract Documents

15.1.A. When Contractor and Owner have signed the Contract Documents, Owner will serve a Notice to Proceed upon Contractor to that effect, either by depositing notice in a post office or post office box regularly maintained by United States Postal Service in a pre-paid wrapper directed to Contractor at legal address or (at Owner's option) by delivery by other means at legal address.

15.1.B. The start date for Contract Time shall be on the date indicated in the applicable Notice to Proceed. If no date is indicated, the start date for Contract Time shall be the fifth Day from the date that Contractor receives, by hand delivery or facsimile transmission, Owner's written Notice to Proceed, unless the Notice to Proceed is served by mail only, in which case the start date for Contract Time shall be the fifth Day following the mailing date. The total number of Days for completion of the Work under the Contract Documents shall be as provided in Document 00520 (Agreement).

15.2 Entitlement to Change Of Contract Time

15.2.A. The Contract Time may only be changed by Change Order or by Contract Modification, and all time limits stated in the Contract Documents are of the essence of Contract Documents.

15.2.B. The Contract Time will be adjusted in an amount equal to the time lost due to:

1. Changes in the Work ordered by Owner;
2. Acts or neglect by Owner, Engineer, any Owner's Representative, utility owners or other contractors performing other work, provided that Contractor has fully and completely performed its responsibilities under the Contract Documents; or
3. Fires, floods, epidemics, abnormal weather conditions beyond the parameters otherwise set forth in this paragraph 15.2, earthquakes, civil or labor disturbances,

strikes or Acts of God, provided damages resulting therefrom are not the result of Contractor's failure to protect the Work as required by Contract Documents.

15.2.C. The Contract Time shall not be extended for any cause identified in paragraph 15.2.B above, however, unless:

1. Contractor actually has been prevented from completing any part of the Work within the Contract Time due to delay that is beyond Contractor's control and due to reasons for which Contractor is not responsible (delays attributable to and within the control of a Subcontractor, or its subcontractors, or supplier shall be deemed to be delays within the control of Contractor);
2. A claim for delay is made as provided herein; and
3. Contractor submits a Time Impact Evaluation as required under Section 01320 (Progress Schedules and Reports) that demonstrates actual delay to critical Work activities that actually delay the progress of the Work in the amount of time requested.

15.2.D. Where Contractor is prevented from completing any part of the Work within the Contract Time due to delay beyond the control of both Owner and Contractor (including, but not limited to, adverse weather of all types and acts of other contractors or utilities), an extension of Contract Time, in an amount equal to the time lost due to such delay (without compensation), shall be Contractor's sole and exclusive remedy for such delay.

15.3 Weather-Related Delays

15.3.A. Delays due to abnormal or adverse weather conditions will not be allowed for weather conditions that fall within the parameters listed herein. Adverse weather delays may be allowed only if the number of workdays of adverse weather exceeds these on a monthly basis and Contractor proves that adverse weather actually caused delays. Contractor shall give written notice of intent to claim an adverse weather Day within one Day of the adverse weather delay occurring. Rain parameters are as follows, pro-rated in the individual month Contractor starts and finishes Work.

Rain Days: January, [9]; February, [8]; March, [7]; April, [4]; May, [2]; June, [1]; July, [0]; August, [0]; September, [1]; October, [3]; November, [6]; and December, [8].

In order to qualify as an adverse weather delay with respect to the foregoing parameters, daily rainfall must exceed 0.10 of an inch or more at the Santa Rosa, California station, as measured by the National Oceanic & Atmospheric Administration, and Contractor must prove that the rain actually caused delay as set forth above.

15.3.B. Contractor shall include the foregoing rain parameters as a monthly activity in its Progress Schedule. As Work on the critical path is affected by rain, Contractor shall notify Owner and request that the Days be moved to the affected activities. Any adverse weather Days remaining shall be considered Project Float.

15.3.C. Adverse weather delay for rain shall be recognized for the actual period of time Contractor proves it was delayed by rain exceeding the specified parameters. For example, and not by way of limitation, if rain exceeding the specified parameters does not in fact delay Contractor's progress on the critical path, then no time extension shall be recognized; and conversely, if Contractor proves that rain exceeding the specified parameters causes delay to Contractor for a period longer than the number of rain

Days incurred (e.g., if it rains during grading Work), then Contractor shall be entitled to a time extension equal to the actual period of such delay.

15.3.D. Contractor shall take reasonable steps to mitigate potential weather delays, such as dewatering the Site, covering Work and material that could be affected adversely by weather, and using all necessary construction means and methods to dry and/or aerate wet soils. Failure to do so shall be cause for Owner to not grant a time extension due to adverse weather, where Contractor could have avoided or mitigated the potential delay by exercising reasonable care.

15.4 Notice Of Delay

15.4.A. Within seven Days of the beginning of any delay, Contractor shall notify Owner in writing, by submitting a notice of potential claim, of all anticipated delays resulting from the delay event in question. Any request for extension of time shall be accompanied by Contractor's written statement that the adjustment claimed is the entire adjustment to which the Contractor is entitled as a result of the occurrence of said event, and shall include a written schedule document that demonstrates delay to the critical path using a Time Impact Evaluation as specified in Section 01320 (Progress Schedules). Owner will determine all claims and adjustments in the Contract Time. No claim for an adjustment in the Contract Time will be valid and such claim will be waived if not submitted in accordance with the requirements of this paragraph 15.4.A.

15.5 Time Extensions And/Or Compensation Entitlement For Delays

15.5.A. Contractor may receive a time extension and be compensated for delays caused directly and solely by Owner.

15.5.B. Contractor may receive a time extension without compensation for delays resulting in whole or in part from causes beyond the reasonable control of Contractor and Owner, e.g., adverse weather conditions exceeding Contract Documents parameters, acts of third parties unrelated to Contractor's obligations herein, earthquakes, Acts of God and epidemics. In such cases, a time extension without compensation shall constitute Contractor's sole and exclusive remedy for such delays.

15.5.C. Contractor shall not be entitled to any time extension or compensation including, but not limited to, extended field or home office overhead, field supervision, costs of capital, interest, escalation charges, acceleration costs or other impacts for any delays caused in whole or in part by Contractor's failure to perform its obligations under the Contract Documents, or during periods of delay concurrently caused by Contractor and either Owner or others.

15.5.D. Contractor shall not be entitled to damages for delay to the Work caused by the following reasons:

1. Owner's right to sequence the Work in a manner which would avoid disruption to Owner's contractors and their subcontractors and Owner's employees, exercised as a result of Contractor's failure to perform its cooperation and coordination responsibilities required by Contract Documents; Owner's enforcement of any government act or regulation; or the provisions of the Contract Documents;
2. For changed Site conditions that are beyond the parties' contemplation, except that Owner may approve direct costs associated with unknown conditions (but not costs or damages which result from such delays); and

3. Extensive requests for clarifications to Contract Documents or Contract Modifications thereto, provided such clarifications or Contract Modifications are processed by Owner or its consultants in a reasonable time commensurate with Contract Documents requirements.

15.6 Liquidated Damages

15.6.A. Time is of the essence. Execution of Contract Documents by Contractor shall constitute acknowledgement by Contractor that Contractor understands, has ascertained and agrees that Owner will actually sustain damages in the amount fixed in the Contract Documents for each and every Day during which completion of Work required is delayed beyond expiration of time fixed for completion or extensions of time allowed pursuant to provisions hereof. Contractor and Owner agree that specified measures of liquidated damages shall be presumed to be the damages actually sustained by Owner as defined below, and that because of the nature of the Project, it would be impracticable or extremely difficult to fix the actual damages.

15.6.B. Liquidated damages shall be considered not as a penalty but as agreed monetary damage sustained by Owner for increased Project administration expenses, including extra inspection, construction management, and architectural and engineering expenses related to the Project and Contract Documents because Contractor failed to perform and complete Work within time fixed for completion or extensions of time allowed pursuant to provisions hereof. Liquidated damages shall not be deemed to include within their scope additional damages or administrative costs arising from Defective Work, lost revenues, interest expenses, cost of completion of the Work, cost of substitute facilities, claims and fines of regulatory agencies, damages suffered by others or other forms of liability claimed against Owner as a result of delay (e.g., delay or delay-related claims of other contractors or subcontractors), and defense costs thereof. Contractor shall be fully responsible for the actual amount of any such damages it causes, in addition to the liquidated damages otherwise due Owner.

15.6.C. Owner may deduct from any money due or to become due to Contractor subsequent to time for completion of entire Work and extensions of time allowed pursuant to provisions hereof, a sum representing then-accrued liquidated damages. Should Contractor fall behind the approved Progress Schedule, Owner may deduct liquidated damages based on its estimated period of late completion. Owner need not wait until Final Completion to withhold liquidated damages from Contractor's progress payments. Should money due or to become due to Contractor be insufficient to cover aggregate liquidated damages due, then Contractor forthwith shall pay the remainder of the assessed liquidated damages to Owner.

16. <u>WORKING CONDITIONS AND PREVAILING WAGES</u>

16.1 Use Of Site/Sanitary Rules

16.1.A. All portions of the Work shall be maintained at all times in neat, clean and sanitary condition. Contractor shall furnish toilets for use of Contractor's and Subcontractors' employees on the Site where needed, and their use shall be strictly enforced. All toilets shall be properly secluded from public observation, and shall be located, constructed and maintained subject to Owner's approval.

16.1.B. Contractor shall confine construction equipment, the storage of materials and equipment and the operations of workers to the Site and land areas identified in and

permitted by Contract Documents and other land and areas permitted by applicable laws and regulations, rights of way, permits and easements or as designated by Owner, and shall not unreasonably encumber the premises with construction equipment or other materials or equipment. Contractor shall assume full responsibility for any damage to any such land or area, any improvement located thereon, or to the owner or occupant thereof resulting from the performance of Work.

16.1.C. During the progress of the Work, Contractor shall keep the Site and the Project free from accumulations of waste materials, rubbish and other debris resulting from the Work. At the completion of the Work, Contractor shall clean the Site, remove all waste materials, rubbish and debris from and about the Site as well as all tools, appliances, construction equipment and machinery and surplus materials. Contractor shall leave the premises clean and ready for occupancy by Owner at Substantial Completion of Work. Contractor shall restore to original condition all property not designated for alteration by Contract Documents.

16.1.D. Contractor shall not load nor permit any part of any structure or pavement to be loaded in any manner that will endanger the structure or pavement, nor shall Contractor subject any part of Work or adjacent property to stresses or pressures that will endanger it. Contractor shall conduct all necessary existing conditions investigation regarding structural, mechanical, electrical or any other system existing, shall perform Work consistent with such existing conditions, and shall have full responsibility for insufficiencies or damage resulting from insufficiencies of existing systems, equipment or structures to accommodate performing the Work.

16.2 Protection Of Work, Persons, And Property

16.2.A. Contractor shall be responsible for initiating, maintaining and supervising all safety precautions and programs in connection with Work. Contractor shall comply with all safety requirements specified in any safety program established by Owner, or required by state, federal or local laws and ordinances. Contractor shall be responsible for all damage to Work, property or structures, and all injuries to persons either on the Site or constituting the Work (e.g., materials in transit), arising from the performance of Work of the Contract Documents from any cause.

16.2.B. Contractor shall comply with all applicable laws and regulations of any public body having jurisdiction for safety of persons or property or to protect them from damage, injury or loss; and shall erect and maintain all necessary safeguards for such safety and protection. Contractor shall notify owners of adjacent property and of Underground Facilities and utility owners when prosecution of the Work may affect them, and shall cooperate with them in the protection, removal, relocation and replacement of their property.

16.2.C. Contractor shall remedy all damage, injury or loss to any property referred to in paragraph 16.2.A of this Document 00700, caused, directly or indirectly, in whole or in part, by Contractor, any Subcontractor, supplier, or any other person or organization directly or indirectly employed by any of them to perform or furnish any Work or anyone for whose acts any of them may be liable. Contractor's duties and responsibility for safety and for protection of Work shall continue until such time as all the Work is completed and Final Acceptance of the Work. Owner and its agents do not assume any responsibility for collecting any indemnity from any person or persons causing damage to Contractor's Work.

16.2.D. Contractor shall designate a qualified and experienced safety representative at the Site whose duties and responsibilities shall be the prevention of accidents and the maintaining and supervising of safety precautions and programs.

16.2.E. Owner may, at its option, retain such moneys due under the Contract Documents as Owner deems necessary until any and all suits or claims against Contractor for injury to persons or property shall be settled and Owner receives satisfactory evidence to that effect.

16.3 Responsibility For Safety And Health

16.3.A. Contractor shall ensure that its and each tier of Subcontractors' employees, agents and invitees comply with applicable health and safety laws while at the Site. These laws include the Occupational Safety and Health Act of 1970 and rules and regulations issued pursuant thereto, and Owner's safety regulations as amended from time to time. Contractor shall comply with all Owner directions regarding protective clothing and gear.

16.3.B. Contractor shall be fully responsible for the safety of its and its Subcontractors' employees, agents and invitees on the Site. Contractor shall notify Owner, in writing, of the existence of hazardous conditions, property or equipment at the Site that are not under Contractor's control. Contractor shall be responsible for taking all the necessary precautions against injury to persons or damage to the property of Contractor, Subcontractors or persons from recognized hazards until the responsible party corrects the hazard.

16.3.C. Contractor shall confine all persons acting on its or its Subcontractors' behalf to that portion of the Site where Work under the Contract Documents is to be performed, Owner-designated routes for ingress and egress thereto, and any other Owner-designated area. Except those routes for ingress and egress over which Contractor has no right of control, within such areas, Contractor shall provide safe means of access to all places at which persons may at any time have occasion to be present.

16.4 Emergencies

16.4.A. In emergencies affecting the safety or protection of persons or Work or property at the Site or adjacent thereto, Contractor, without special instruction or authorization from Owner, is obligated to act to prevent threat and damage, injury or loss, until directed otherwise by Owner. Contractor shall give Owner prompt written notice if Contractor believes that any significant changes in Work or variations from Contract Documents have been caused thereby. If Owner determines that a change in the Contract Documents is required because of the action taken by Contractor in response to such an emergency, a Change Order or Construction Change Directive will be issued to document the consequences of such action.

16.5 Use Of Roadways And Walkways

16.5.A. Contractor shall not unnecessarily interfere with use of any roadway, walkway or other facility for vehicular or pedestrian traffic. Before beginning any interference and only with Owner's prior concurrence, Contractor may provide detour or temporary bridge for traffic to pass around or over the interference, which Contractor shall maintain in satisfactory condition as long as interference continues. Unless otherwise provided in the Contract Documents, Contractor shall bear the cost of these temporary facilities.

16.6 Nondiscrimination

16.6.A. No person or entity shall discriminate in the employment of persons upon public works because of race, religious creed, color, national origin, ancestry, physical disability, mental disability, medical condition, marital status, sexual preference, or gender of such persons, except as provided in Section 12940 of the Government Code. Every contractor for public works violating the provisions of Section 1735 of the Labor Code is subject to all the penalties imposed for a violation of Chapter 1, Part 7, Division 2 of the Labor Code. Contractor agrees to comply with the provisions of Chapter 19, Article II, of the Sonoma County Code prohibiting discrimination in housing, employment, and services because of AIDS or HIV infection during the term of this Contract and any extensions of the term.

16.7 Prevailing Wages

16.7.A. Contractor shall pay to persons performing labor in and about Work provided for in the Contract Documents an amount equal to or more than the general prevailing rate of per diem wages for (1) work of a similar character in the locality in which the Work is performed and (2) legal holiday and overtime work in said locality. The per diem wages shall be an amount equal to or more than the stipulated rates contained in a schedule that has been ascertained and determined by the Director of the State Department of Industrial Relations and Owner to be the general prevailing rate of per diem wages for each craft or type of workman or mechanic needed to execute this Contract. Contractor shall also cause a copy of this determination of the prevailing rate of per diem wages to be posted at each Site, in addition to all other job site notices prescribed by regulation.

16.7.B. Contractor shall forfeit, as a penalty to Owner, Fifty Dollars ($50.00) for each laborer, workman, or mechanic employed in performing labor in and about the Work provided for in the Contract Documents for each Day, or portion thereof, that such laborer, workman or mechanic is paid less than the said stipulated rates for any Work done under the Contract Documents by him or her or by any Subcontractor under him or her, in violation of Articles 1 and 2 of Chapter 1 of Part 7 of Division II of the California Labor Code. The sums and amounts which shall be forfeited pursuant to this paragraph 16.7.B and the terms of the Labor Code shall be withheld and retained from payments due to Contractor under the Contract Documents, pursuant to this Document 00700 and the Labor Code, but no sum shall be so withheld, retained or forfeited except from the final payment without a full investigation by either the State Department of Industrial Relations or by Owner. The Labor Commissioner pursuant to Labor Code Section 1775 shall determine the final amount of forfeiture.

16.7.C. Contractor shall insert in every subcontract or other arrangement which Contractor may make for performance of Work or labor on Work provided for in the Contract, provision that Subcontractor shall pay persons performing labor or rendering service under subcontract or other arrangement not less than the general prevailing rate of per diem wages for work of a similar character in the locality in which the Work is performed, and not less than the general prevailing rate of per diem wages for holiday and overtime work fixed in the Labor Code.

16.7.D. Contractor stipulates that it shall comply with all applicable wage and hour laws, including without limitation Labor Code Sections 1725.5, 1776, and 1811.

16.7.E. This project is subject to compliance monitoring and enforcement by the Department of Industrial Relations. Contractor shall furnish and shall require all subcontractors to furnish the records specified in Labor Code section 1776 (e.g. electronic certified payroll records) directly to the Labor Commissioner in a format prescribed by the Labor Commissioner at least monthly.

16.7.F. Contractor and all Subcontractors shall be registered and qualified to perform public work pursuant to Labor Code section 1725.5 as a condition to engage in the performance of any Work hereunder.

16.7.A. Contractor and Subcontractors must keep accurate payroll records, showing the name, address, social security number, Work classification, straight time and overtime hours worked each Day and week, and the actual per diem wages paid to each journeyman, apprentice, worker, or other employee employed by him or her in connection with the Work of the Contract documents. Each payroll record shall contain or be verified by a written declaration as required by Labor Code Section 1776.

16.7.B. The payroll records enumerated above must be certified and shall be available for inspection at all reasonable hours at the principal office of Contractor as required by Labor Code Section 1776.

1. Contractor shall inform Owner of the location of records enumerated above, including the street address, city and county, and shall, within five working Days, provide a notice of a change of location and address.
2. Contractor or Subcontractor has 10 Days in which to comply subsequent to receipt of a written notice requesting the records enumerated above. In the event that Contractor or Subcontractor fails to comply with the ten-Day period, he or she shall, as a penalty to Owner on whose behalf the contract is made or awarded, forfeit $100.00 for each calendar Day, or portion thereof, for each worker, until strict compliance is effectuated. Upon the request of the Division of Apprenticeship Standards or the Division of Labor Standards Enforcement, these penalties shall be withheld from Progress Payments then due. Contractor is not subject to a penalty assessment pursuant to this subparagraph due to the failure of a Subcontractor to comply with this subparagraph.

16.7.C. Contractor shall also deliver certified payrolls to Owner with each Application for Payment as described in Section 01200 (Payment Procedures).

16.7.D. This project is subject to compliance monitoring and enforcement by the Department of Industrial Relations. Contractor shall furnish and shall require all subcontractors to furnish the records specified in Labor Code section 1776 (e.g. electronic certified payroll records) directly to the Labor Commissioner in a format prescribed by the Labor Commissioner at least monthly.

16.7.E. Contractor and all Subcontractors shall be registered and qualified to perform public work pursuant to Labor Code section 1725.5 as a condition to engage in the performance of any Work hereunder.

16.7.F. Contractor and Subcontractors must keep accurate payroll records, showing the name, address, social security number, Work classification, straight time and overtime hours worked each Day and week, and the actual per diem wages paid to each journeyman, apprentice, worker, or other employee employed by him or her in connection with the Work of the Contract documents. Each payroll record shall contain or be verified by a written declaration as required by Labor Code Section 1776.

16.7.G. The payroll records enumerated above must be certified and shall be available for inspection at all reasonable hours at the principal office of Contractor as required by Labor Code Section 1776.

1. Contractor shall inform Owner of the location of records enumerated above, including the street address, city and county, and shall, within five working Days, provide a notice of a change of location and address.
2. Contractor or Subcontractor has 10 Days in which to comply subsequent to receipt of a written notice requesting the records enumerated above. In the event that Contractor or Subcontractor fails to comply with the ten-Day period, he or she shall, as a penalty to Owner on whose behalf the contract is made or awarded, forfeit $100.00 for each calendar Day, or portion thereof, for each worker, until strict compliance is effectuated. Upon the request of the Division of Apprenticeship Standards or the Division of Labor Standards Enforcement, these penalties shall be withheld from Progress Payments then due. Contractor is not subject to a penalty assessment pursuant to this subparagraph due to the failure of a Subcontractor to comply with this subparagraph.

16.7.H. Contractor shall also deliver certified payrolls to Owner with each Application for Payment as described in Section 01200 (Payment Procedures).

16.8 Environmental Controls

16.8.A. Contractor shall comply with all rules, regulations, ordinances, and statutes that apply to any Work performed under the Contract Documents including, without limitation, any toxic, water, storm water management, and soil pollution controls and air pollution controls specified in Government Code Section 11017. Contractor shall be responsible for insuring that Contractor's Employees, Subcontractors, and the public are protected from exposure to airborne hazards or contaminated water, soil, or other toxic materials used during or generated by activities on the Site or associated with the Project.

16.9 Shoring Safety Plan

16.9.A. Any conflict between this paragraph 16.9 and Division 2 of the Specifications shall be resolved in favor of the most stringent requirement.

16.9.B. At least five Days in advance of any excavation five feet or more in depth, Contractor shall submit to Owner a detailed plan showing the shoring, bracing and sloping design (including calculations) and other provisions to be made for worker protection from the hazard of caving ground during the excavation, as required by Labor Code Section 6705. A civil or structural engineer registered in California shall prepare and sign any plan that varies from the shoring system standards established by the State Construction Safety Orders.

16.9.C. During the course of Work, Contractor shall be responsible for determining where sloping, shoring, and/or bracing is necessary and the adequacy of the design, installation, and maintenance of all shoring and bracing for all excavation, including any excavation less than five feet in depth. Contractor will be solely responsible for any damage or injuries that may result from excavating or trenching. Owner's acceptance of any drawings showing the shoring or bracing design or Work schedule shall not relieve Contractor of its responsibilities under this paragraph 16.9.

16.9.D. Appoint a qualified supervisory employee who shall be responsible to determine the sloping or shoring system to be used depending on local soil type, water table, stratification, depth, etc.

END OF DOCUMENT

DOCUMENT 00800

SUPPLEMENTARY CONDITIONS

1. SUMMARY

A. This document includes requirements that supplement the paragraphs of Document 00700 (General Conditions).

2. SUPPLEMENTS

A. Supplement to paragraph 4.2:

4.2.A. General.

1. Contractor shall maintain and shall require all of its subcontractors and other agents to maintain the insurance listed below. Contractor shall not commence Work, nor allow its employees, subcontractors or anyone to commence Work until the required insurance has been submitted and approved by Owner and a Notice to Proceed has been issued. Any requirement for insurance to be maintained after completion of the Work shall survive this Agreement.
2. Owner reserves the right to review any and all of the required insurance policies and/or endorsements, but has no obligation to do so. Failure to demand evidence of full compliance with the insurance requirements set forth in this Contract or failure to identify any insurance deficiency shall not relieve Contractor from, nor be construed or deemed a waiver of, its obligation to maintain the required insurance at all times during the performance of this Contract.

4.2.B. Contractor - Required Insurance.

1. At or before the date specified in Document 00510 (Notice of Award), Contractor shall furnish to Owner satisfactory proof that Contractor has obtained the following insurance as specified below:
   a. Workers Compensation Insurance & Employers Liability Insurance.
      1) Workers Compensation insurance with statutory limits as required by the Labor Code of the State of California.
      2) Employers Liability with minimum limits of $1,000,000 per Accident; $1,000,000 Disease per employee; $1,000,000 Disease per policy.
      3) The policy shall be endorsed to include a written waiver of the insurer's right to subrogate against Owner.
      4) Required Evidence of Insurance:
         (a) Subrogation waiver endorsement, and
         (b) Certificate of Insurance.
      5) If injury occurs to any employee of Contractor, Subcontractor, or sub-subcontractor for which the employee, or the employee's dependents in the event of employee's death, is entitled to compensation from Owner under provisions of the Workers Compensation Insurance and Safety Act (Act), as amended, or for which compensation is claimed from Owner, Owner may retain out of sums due Contractor under Contract Documents, amount sufficient to cover such compensation, as fixed by the Act, as amended, until such compensation is paid, or until it is determined that no compensation is due. If Owner is compelled to pay compensation, Owner may, in its discretion, either deduct and retain

from the Contract Sum the amount so paid, or require Contractor to reimburse Owner.

b. General Liability Insurance.
   1) Commercial General Liability Insurance on a standard occurrence form, no less broad than ISO form CG 00 01.
   2) Minimum Limits. The required limits may be provided by a combination of General Liability Insurance and Commercial Umbrella Liability Insurance. If Contractor maintains higher limits than the specified minimum limits, Owner requires and shall be entitled to coverage for the higher limits maintained by Contractor.
      (a) Projects under $1,000,000: $1,000,000 per Occurrence; $2,000,000 General Aggregate; $2,000,000 Products/Completed Operations Aggregate. The General Aggregate shall apply separately to each Project.
      (b) Projects from $1,000,000 - $4,999,999: $2,000,000 per Occurrence; $4,000,000 General Aggregate; $4,000,000 Products/Completed Operations Aggregate. The General Aggregate shall apply separately to each Project.
      (c) Projects from $5,000,000 - $9,999,999: $5,000,000 per Occurrence; $5,000,000 General Aggregate; $5,000,000 Products/Completed Operations Aggregate. The General Aggregate shall apply separately to each Project.
      (d) Projects $10,000,000 and Over: Minimum Limits: $10,000,000 per Occurrence; $10,000,000 General Aggregate; $10,000,000 Products/Completed Operations Aggregate. The General Aggregate shall apply separately to each Project.
   3) Any deductible or self-insured retention shall be shown on the Certificate of Insurance. If the deductible or self-insured retention exceeds $25,000 it must be approved in advance by Owner. Contractor is responsible for any deductible or self-insured retention and shall fund it upon Owner's written request, regardless of whether Contractor has a claim against the insurance or is named as a party in any action involving Owner.
   4) Insurance shall be maintained for the entire period of the Work and for the duration of Contractor's Guaranty Period specified in Document 00630 (Guaranty). Completed operations insurance shall be maintained beyond the Guaranty Period as specified below:
      (a) Projects under $1,000,000: One (1) year after end of Guaranty Period.
      (b) Projects from $1,000,000 - $4,999,999: Two (2) years after end of Guaranty Period.
      (c) Projects from $5,000,000 - $9,999,999: Three (3) years after end of Guaranty Period.
      (d) Projects $10,000,000 and Over: Five (5) years after end of Guaranty Period.
   5) Owner, its Board of Directors, and its employees, representatives, consultants, and agents; County of Sonoma and its officers, employees, consultants, representatives, and agents; shall be additional insureds for liability arising out of ongoing <u>and</u> completed operations by or on behalf of the Contractor in the performance of the Contract Documents.

Additional insureds status shall continue for the period(s) specified in paragraph 4).

6) Airport Business Center and American Ag Credit, FLCA shall be additional insureds for liability arising out of Contractor's ongoing operations (ISO endorsement CG 20 26, Additional Insured – Designated Person or Organization, or equivalent).
7) The policy definition of "insured contract" shall include assumptions of liability arising out of both ongoing operations and the products-completed operations hazard (broad form contractual liability coverage including the "f" definition of insured contract in ISO form CG 00 01, or equivalent).
8) The insurance provided to the additional insureds shall be primary to, and non-contributory with, any insurance or self-insurance program maintained by Owner *et al.*
9) The policy shall not exclude injury or damage caused by, or resulting from, explosion, collapse and/or underground hazards.
10) The policy shall not contain a Contractors' Warranty or other similar language which eliminates or restricts insurance because of a Subcontractor's failure to carry specific insurance or to supply evidence of such insurance.
11) The policy shall be endorsed to include a written waiver of the insurer's right to subrogate against all persons or entities that are, or are required to be, additional insureds.
12) The policy shall cover inter-insured suits between Contractor and the additional insureds and shall include a "separation of insureds" or "severability" clause which treats each insured separately.
13) Required Evidence of Insurance:
    (a) Additional insured endorsements or policy language granting additional insured status;
    (b) Endorsement or policy language indicating that insurance is primary and non-contributory; and
    (c) Certificate of Insurance.

c. Automobile Liability Insurance.
    1) Minimum Limits:
        (a) Projects under $1,000,000: $1,000,000 combined single limit per accident.
        (b) Projects $1,000,000 and Over: $2,000,000 combined single limit per accident.
    2) Insurance shall apply to all owned, hired, and non-owned vehicles.
    3) Owner, its Board of Directors, and its employees, representatives, consultants, and agents shall qualify as an insured.
    4) Insurance shall be maintained for the entire term of this Contract, including any Guaranty Period.

5) Required Evidence of Insurance:
   (a) Endorsement or policy language indicating that Owner, its Board of Directors, and its employees, representatives, consultants, and agents; are insureds; and
   (b) Certificate of Insurance.

d. Contractors Pollution Liability Insurance.
   1) Minimum Limits:
      (a) Projects under $5,000,000: $1,000,000 per pollution Incident; $1,000,000 Aggregate; and
      (b) Projects $5,000,000 and Over: $2,000,000 per pollution Incident; $2,000,000 Aggregate.
   2) Any deductible or self-insured retention shall be shown on the Certificate of Insurance. If the deductible or self-insured retention exceeds $25,000 it must be approved in advance by Owner. Contractor is responsible for any deductible or self-insured retention and shall fund it upon Owner's written request, regardless of whether Contractor has a claim against the insurance or is named as a party in any action involving Owner.
   3) If the insurance is on a Claims-Made basis, the retroactive date shall be no later than the commencement of Work.
   4) The policy shall cover injury or damage caused by, or resulting from, mold, fungus, wet rot, dry rot and/or bacteria.
   5) Insurance shall be maintained for the entire period of the Work and for the duration of Contractor's Guaranty Period specified in Document 00630 (Guaranty), plus the additional periods as specified below:
      (a) Projects under $1,000,000: One (1) year after end of Guaranty Period.
      (b) Projects from $1,000,000 - $4,999,999: Two (2) years after end of Guaranty Period.
      (c) Projects from $5,000,000 - $9,999,999: Three (3) years after end of Guaranty Period.
      (d) Projects $10,000,000 and Over: Five (5) years after end of Guaranty Period.
   6) If the insurance is on a Claims-Made basis, the continuation coverage may be provided by: (a) renewal of the existing policy; (b) an extended reporting period endorsement; or (c) replacement insurance with a retroactive date no later than the commencement of the Work.
   7) Owner, its Board of Directors, and its employees, representatives, consultants, and agents; shall be additional insureds for liability arising out of operations by or on behalf of the Contractor in the performance of the Contract Documents.
   8) The insurance provided to the additional insureds shall apply on a primary and non-contributory basis with respect to any insurance or self-insurance program maintained by Owner *et al.*
   9) Required Evidence of Insurance:
      (a) Additional insured endorsement or policy language granting additional insured status;
      (b) Endorsement or policy language indicating that insurance covers mold, fungus, wet rot, dry rot and/or bacteria;

(c) Endorsement or policy language indicating that coverage is primary and non-contributory; and
(d) Certificate of Insurance.

e. Professional Liability/Errors & Omissions Insurance.
1) Required if the Contractor or its employees engage in design or professional activities (architecture, engineering or surveying) that are not subcontracted out.
2) Minimum Limit: $1,000,000 per claim or per occurrence.
3) Any deductible or self-insured retention shall be shown on the Certificate of Insurance. If the deductible or self-insured retention exceeds $25,000 it must be approved in advance by Owner.
4) If the insurance is on a Claims-Made basis, the retroactive date shall be no later than the commencement of the Work.
5) Insurance applicable to the Work performed under the Contract shall be continued for two (2) years after completion of the Work. Such continuation insurance may be provided by one of the following: (a) renewal of the existing policy; (b) an extended reporting period endorsement; or (c) replacement insurance with a retroactive date no later than the commencement of the Work.
6) Required Evidence of Insurance:
(a) Certificate of Insurance.

2. Increase of Minimum Limits.
a. Required minimum amounts of insurance may be increased should conditions of Work, in opinion of Owner, warrant such increase. Contractor shall increase required insurance amounts upon direction by Owner.

3. Standards for Insurance Companies.
a. Insurers, other than the California State Compensation Insurance Fund, shall have an A.M. Best's rating of at least A:VII.

4. Documentation.
a. The Certificate of Insurance shall include the following reference: 0-80-7 #1A.
b. Contractor agrees to maintain current Evidence of Insurance on file with Owner for the periods of insurance specified above in Paragraphs 2.4.2.B.1.a through 2.4.2.B.1.d. Any requirement to maintain insurance after Final Completion of the Work, including providing Certificates evidencing required insurance, shall survive the Contract.
1) Required Evidence of Insurance shall be submitted to Sonoma County Water Agency, 404 Aviation Boulevard, Santa Rosa, CA 95403-9019.
2) Required Evidence of Insurance shall be submitted for any renewal or replacement of a policy that already exists, at least ten (10) days before expiration or other termination of the existing policy.
3) Contractor shall provide immediate written notice if: (a) any of the required insurance policies is terminated; (b) the limits of any of the required policies are reduced; or (c) the deductible or self-insured retention is increased.
4) Upon written request, certified copies of required insurance policies must be provided within thirty (30) days.

5. Policy Obligations
   a. Contractor's indemnity and other obligations shall not be limited by the foregoing insurance requirements.
6. Material Breach.
   a. If Contractor fails to maintain Insurance which is required pursuant to the Contract Documents, it shall be deemed a material breach. Owner, at its sole option, may terminate the Contract for default and obtain damages from Contractor resulting from said breach. Alternatively, Owner may purchase the required Insurance, and without further notice to Contractor, Owner may deduct from sums due to Contractor any premium costs advanced by Owner for such insurance. These remedies shall be in addition to any other remedies available to Owner under the Contract Documents or Law.

4.2.C. Subcontractors - Required Insurance.

1. With respect to their portion of the Work, Subcontractors of all tiers shall maintain the same insurance required to be maintained by Contractor with limits as follows:
   a. Minimum General Liability Limits for Framing, Mechanical, and Electrical Subcontractors.
      1) Projects under $1,000,000: $1,000,000 per Occurrence; $2,000,000 General Aggregate; $2,000,000 Products/Completed Operations Aggregate. The General Aggregate shall apply separately to each Project.
      2) Projects $1,000,000 and Over: $2,000,000 per Occurrence; $4,000,000 General Aggregate; $4,000,000 Products/Completed Operations Aggregate. The General Aggregate shall apply separately to each Project.
   b. Minimum General Liability Limits for all Subcontractors other than Framing, Mechanical, and Electrical Subcontractors.
      1) $1,000,000 per Occurrence; $2,000,000 General Aggregate; $2,000,000 Products/Completed Operations Aggregate. The General Aggregate shall apply separately to each Project.
   c. Minimum Automobile Liability Limits.
      1) $1,000,000 combined single limit per accident.
   d. Minimum Employers Liability Limits.
      1) $1,000,000 per Accident; $1,000,000 Disease per employee; $1,000,000 Disease per policy.
   e. Professional Liability/Errors & Omissions Insurance.
      1) Required for any architect, engineer, surveyor or other licensed professional engaged by Contractor to perform portions of the Work.
      2) Minimum Limit: $1,000,000 per claim or per occurrence.
      3) Any deductible or self-insured retention shall be shown on the Certificate of Insurance. If the deductible or self-insured retention exceeds $25,000 it must be approved in advance by Owner.
      4) If the insurance is on a Claims-Made basis, the retroactive date shall be no later than the commencement of the Work.
      5) Coverage applicable to the Work performed under the Contract shall be continued for two (2) years after completion of the Work. Such continuation coverage may be provided by one of the following: (a) renewal of the existing policy; (b) an extended reporting period

endorsement; or (c) replacement insurance with a retroactive date no later than the commencement of the Work.

6) Required Evidence of Insurance:
   (a) Certificate of Insurance.

4.2.D. Builder's Risk.

1. With respect to Work under this Contract, Owner shall maintain "All-Risk" Course of Construction insurance as follows:
   a. Insured Property shall include: (1) Real property in Course of Construction; (2) building materials and supplies intended to be in or on the completed Work located at the Site, in storage or in transit, and whether or not owned or paid for by Owner; (3) fixtures and machinery intended to be in or on the completed Work; (4) scaffolding, cribbing, fencing, forms and temporary trailers, while located on the Site, in storage or in transit.
   b. Limit of insurance shall be the full contract value.
   c. Responsibility for paying deductibles is as follows:

Contract Value or Description	***Contractor's Responsibility for Deductible: Earthquake and Flood***	***Contractor's Responsibility for Deductible: Other Insured Perils***	***Owner's Responsibility for Deductible***
Full Contract Value under $1,000,000	First $10,000	First $5,000	Balance of Deductible
Full Contract Value: $1,000,000 - $9,999,999	First $20,000	First $10,000	Balance of Deductible
Full Contract Value: $10,000,000 - $19,999,999	First $50,000	First $25,000	Balance of Deductible
Full Contract Value: $20,000,000 and above	First $60,000	First $30,000	Balance of Deductible

   d. Contractor and Subcontractors of all tiers shall be additional insureds.
   e. Excluded property: Equipment, tools, and personal effects belonging to Contractor or Subcontractors of all tiers.
   f. Insured perils: All Risks of Direct Physical Damage or Loss, including flood and, for scheduled locations, earthquake, except as excluded.
   g. Exclusions may include, but are not limited to:
      1) Loss due to wear and tear, moth, vermin, termites, insects, latent defects, gradual deterioration, wet or dry rot, rust, corrosion, erosion or normal settling, shrinkage and/or expansion of buildings or foundations.
      2) Loss or damage due to contaminants and/or pollutants. However, fire losses arising directly or indirectly from pollutants or contaminants are covered.
      3) Loss of use or occupancy or consequential loss.
      4) Liquidated damages and/or penalties for delay or detention in connection with guarantees of performance or efficiency.
      5) Loss or damage caused by or resulting from infidelity or dishonesty on the part of any insured or the employees or agents of any insured.
      6) Inventory shortage or unexplained disappearance.

h. A copy of Owner's Course of Construction Insurance, including all policy coverages, conditions and exclusions, shall control in the event of any conflict with the language of this Document 00700. Upon request, Owner will provide a Certificate of Property Insurance.

4.2.E. Weather Related Delays

1. Replace 15.3.A as follows:

a. Delays due to abnormal or adverse weather conditions will not be allowed for weather conditions that fall within the parameters listed herein. Adverse weather delays may be allowed only if the number of workdays of adverse weather exceeds these on a monthly basis and Contractor proves that adverse weather actually caused delays. Contractor shall give written notice of intent to claim an adverse weather Day within one Day of the adverse weather delay occurring. Rain parameters are as follows, pro-rated in the individual month Contractor starts and finishes Work.

Rain Days: January, [9]; February, [8]; March, [7]; April, [4]; May, [2]; June, [1]; July, [5]; August, [5]; September, [1]; October, [3]; November, [6]; and December, [8].

In order to qualify as an adverse weather delay with respect to the foregoing parameters, daily rainfall must exceed 0.05 of an inch or more at the Santa Rosa, California station, as measured by the National Oceanic & Atmospheric Administration, and Contractor must prove that the rain actually caused delay as set forth above.

Owner reserves the right to stop work for weather-related reasons, at no cost to the Owner.

END OF DOCUMENT

DOCUMENT 00910

ADDENDA

404 AVIATION BOULEVARD ROOF REPLACEMENT

[DOCUMENT TO BE COMPLETED AS ADDENDA DURING BID PERIOD]

END OF DOCUMENT

SPECIFICATIONS

DIVISION 1

GENERAL REQUIREMENTS

SECTION 01100

SUMMARY

PART 1 GENERAL

1.1 SUMMARY

A. Section includes:
   1. Summary of Work and Work Restrictions including:
      a. Summary
      b. Submittals
      c. Work Covered By Contract Documents
      d. Bid Items, Allowances, and Alternates
      e. Work Under Other Contracts
      f. Future Work
      g. Work Sequence
      h. Work Days and Hours
      i. Cooperation of Contractor and Coordination with Other Work
      j. Partial Occupancy/Utilization Requirements
      k. Contractor Use of Site
      l. Air Quality Standards
      m. Protection of Existing Structures and Underground Facilities
      n. Permits
      o. Rights-of-Way
      p. Document Tracking
      q. Products Ordered In Advance
      r. Owner-Furnished Products

1.2 SUBMITTALS

A. Work Plan:
   1. Utility Protection Plan
B. Test Results:
   1. Air Quality Monitoring Results

1.3 WORK COVERED BY CONTRACT DOCUMENTS

A. The Work consists of roof replacement of a 63,000 square foot, actively occupied office building, located at 404 Aviation Boulevard, Santa Rosa, in an unincorporated area of Sonoma County, California. The Work includes, but is not limited to, the removal and replacement of existing roof, removal and storage of existing photovoltaic panels, and reinstallation of photovoltaic panels in working condition after roof replacement is completed. Contract Documents fully describe the Work.
B. The Work of this Contract comprises construction of all the Work indicated, described in the Specifications, or otherwise required by the Contract Documents.
C. Unless provided otherwise in the Contract Documents, all risk of loss to Work covered by Contract Documents shall rest with Contractor until Final Acceptance of the Work.
D. Cost of maintenance of systems and equipment prior to Final Acceptance will be considered as included in prices Bid and no direct or additional payment will be made therefor.

1.4 BID ITEMS, ALLOWANCES, AND ALTERNATES

A. Any Bid item may be deleted from the Work and Contract Sum, in total or in part, prior to or after award of Contract without compensation in any form or adjustment of other Bid items or prices therefore.

B. Payment of all items is subject to provisions of Contract Documents, including without limitation Section 01200 (Price and Payment Procedures).

C. For all Bid items, furnish and install all Work, including connections to existing systems, indicated and described in Specifications and all other Contract Documents. Work and requirements applicable to each individual Bid item, or unit of Work, shall be deemed incorporated into the description of each Bid item (whether Lump Sum or Unit Price).

D. Bid item descriptions (listed by Bid item number):

1. Bonds. The lump sum price paid under this item shall be full payment for furnishing bonds as required by Document 00700 (General Conditions).
2. Insurance. The lump sum price paid under this item shall be full payment for furnishing insurance as required by Document 00700 (General Conditions).
3. Safety Program and Implementation. The lump sum price paid under this item shall be full payment for furnishing and implementing the Safety Program as required by Section 01540 (Site Security and Safety) and Document 00700 (General Conditions).
4. Construction Material Waste Management Plan and Implementation. The lump sum price paid under this item shall be full payment for furnishing and implementing the Construction Material Waste Management Plan as required by Section 01741 (Construction Material Waste Management Plan).
5. Mobilization/Demobilization. The lump sum price paid under this item shall be full payment for initial mobilization at Project commencement (50% to be paid then), and cleanup and demobilization at Final Completion (50% to be paid then).
6. Roofing System. The lump sum paid under this item shall be the full payment for the existing roof removal and disposal; procurement, installation, and warranty of the roofing system; and removal of the old boiler and placement of the new Owner-provided boiler.
7. PV System Removal, Replacement and Testing. The lump sum price paid under this item shall be full payment for removing, storing, replacing DC cables, and reinstalling the PV System; preparation of PV Removal and Replacement Plan, and structural engineering calculations; testing of PV system prior to removing panels and after installing panels to verify the system is in preconstruction working condition, and providing test reports and Operations and Maintenance Manual.
8. Light Tubes. The unit price paid under this item shall be the full payment for providing light tubes, roof penetration, and interior trim. For the purposes of payment, this item will be measured by the unit for each light tube installed.
9. Roof Sheathing Repair. The unit price paid under this item shall be the full payment to remove and replace roof sheathing that Owner determines is moisture damaged. For purposes of payment, this item will be measured by the square foot of roof sheathing replaced.
10. Existing HVAC and Skylight Framing Reinforcements. The lump sum paid under this item shall be the full payment for providing framing reinforcements for 15 existing HVAC units and 7 existing skylights, including removal and replacement of roof sheathing to access the framing and protection of affected work areas below.

11. All Other Work. The lump sum price paid under this item shall be full payment for all Work of Contract Documents other than Work separately provided for under other Bid items.

E. Contingency Reserve.
1. Costs authorized to be paid from the Contingency Reserve:
   a. Cost to Contractor or Subcontractor for removal, as directed by Owner, of unforeseen underground manmade structures that interfere with construction and that require special equipment or additional labor, time, or equipment, as long as removal of such structures would be a basis for adjustment in the Contract Sum pursuant to Section 13.4 of Document 00700.
   b. Cost to Contractor or Subcontractor for relocation or repair, as directed by Owner, of unforeseen underground utilities as long as relocation or repair of such utilities would be a basis for adjustment in the Contract Sum pursuant to Section 13.4 of Document 00700.
   c. Cost to Contractor or Subcontractor for replacement, as directed by Owner, of unforeseen damaged or omitted structural components, other than those identified in the Bid items above.

1.5 WORK UNDER OTHER CONTRACTS

A. HVAC Unit 16: Owner's HVAC contractor will install new boiler and related equipment after Contractor has removed existing boiler and placed new Owner-provided boiler. Contractor shall coordinate with Owner to facilitate HVAC contractor's work.

1.6 FUTURE WORK

A. None expected.

1.7 WORK SEQUENCE

A. Construct Work in stages and at times to accommodate Owner operation requirements during the construction period; coordinate construction schedule and operations with Owner.

B. Special operational constraints include the following:
1. Owner will occupy the building during construction.
2. Power or HVAC shutdowns: Notify Owner in writing at least 2 Business Days prior to the need for a shutdown of any of the existing electrical or gas systems. Certify that all materials, equipment, and personnel are available to perform the Work requiring the shutdown. Owner may verify this certification. Owner forces will shutdown existing systems. Timing and extent of shutdowns will be at Owner's discretion.

C. The following restrictions apply to HVAC unit removal and replacements necessary to complete Work under Bid item 10 (Existing HVAC and Skylight Framing Reinforcements):
1. Units 1, 6, 8, and 10 serve isolated areas and may be removed at any time for up to one Day.
2. Leave one unit of units 3, 4, and 5 in operation at all times. Any two may be removed for up to one Day. Provide a minimum of one week notice to Owner for these units prior to removal.
3. Leave one unit of 7, 9, and 11 in operation at all times. Any two of units 7, 9 and 11 may be removed for up to one Day.
4. Leave one unit of 12 and 13 in operation at all times. Either of units 12 and 13 may be removed for up to one Day.

5. Unit 15 provides supplementary cooling to the building server room, and Occupant Peak Work Hours, as defined in Paragraph 1.8A of this Section 01100, restrictions apply. If the adjacent main unit remains in service, Unit 15 may be removed at any time for up to one Day. Provide at least three Days' notice to Owner prior to removal of this unit.

D. Special Work sequence requirements include the following:
   1. Test, remove, and store photovoltaic system parts necessary to replace roof.
   2. Reinstall and test photovoltaic system.

1.8 WORK DAYS AND HOURS

A. Occupant Peak Work Hours: Monday-Friday inclusive, 7:00 a.m. - 5:00 p.m. local time.
B. Work Days and hours: Monday-Friday inclusive, 7:00 a.m. – 12:00 a.m. midnight, and Saturday, 7:00 a.m. - 5:00 p.m. local time.
C. Work under Bid items 9 (Roof Sheathing Repair) and 10 (Existing HVAC and Skylight Framing Reinforcements) that exposes roof framing must take place outside of Occupant Peak Work Hours.

1.9 COOPERATION OF CONTRACTOR AND COORDINATION WITH OTHER WORK

A. Coordinate with Owner and any Owner forces, or other contractors and forces, as required by Document 00700 (General Conditions), Article 6.
B. Employ a full-time coordinator to constantly review Contract Documents, submittals, changes, and prepare overlay drawings as necessary to avoid conflicts, errors, omissions and untimely construction.
C. "Shared Right of Way" as indicated, is anticipated to be partially occupied by a contractor working on the property adjacent to the site.
D. Coordinate with other contractors using the "Shared Right of Way." Notify other contractor 48 hours in advance of Roof Access space required.

1.10 PARTIAL OCCUPANCY/UTILIZATION REQUIREMENTS

A. Allow Owner to take possession of and use any completed or partially completed portion of the Work during the progress of the Work as soon as is possible without interference to the Work.
B. Possession, use of Work, and placement and installation of equipment by Owner shall not in any way evidence the completion of the Work or any part of it.
C. Contractor shall not be held responsible for damage to the occupied part of the Work resulting from Owner occupancy.
D. Use and occupancy by Owner prior to acceptance of Work does not relieve Contractor of its responsibility to maintain insurance and bonds required under the Contract until entire Work is completed and accepted by Owner.
E. Prior to date of Final Acceptance of the Work by Owner, all necessary repairs or renewals in Work or part thereof so used, not due to ordinary wear and tear, but due to Defective materials or workmanship or to operations of Contractor, shall be made at expense of Contractor, as required in Document 00700 (General Conditions).
F. Use by Owner of Work or part thereof as contemplated by this Section 01100 shall in no case be construed as constituting acceptance of Work or any part thereof. Such use shall neither relieve Contractor of any responsibilities under Contract, nor act as waiver by Owner of any of the conditions thereof.
G. Owner may specify in the Contract Documents that portions of the Work, including electrical and mechanical systems or separate structures, shall be substantially completed on dates described in paragraph 1.6A of this Section 01100, if any, prior to Substantial

Completion of all of the Work. Notify Owner in writing when Contractor considers any such part of the Work ready for its intended use and Substantially Complete and request Owner to issue a Certificate of Substantial Completion for that part of the Work.

1.11 CONTRACTOR USE OF SITE

A. Confine operations at Site to areas permitted by Contract Documents, permits, ordinances, and laws.
B. Do not unreasonably encumber Site with materials or equipment.
C. Assume full responsibility for protection and safekeeping of products stored on premises.
D. Move any stored products that interfere with operations of Owner or other contractor.
E. Coordinate parking, storage, staging, and Work areas with Owner.
F. Owner will provide a storage area for Contractor's equipment and materials as indicated. Owner will not protect the storage area.
G. Do not store construction materials in the Drip line of any tree.
H. Access is available to the Site from Aviation Boulevard along the route indicated.
I. Contractor shall contact Owner at least two Business Days prior to entering the building and performing Work to allow Owner to arrange access into the building.

1.12 AIR QUALITY STANDARDS

A. Utility Service: Maintain existing utilities indicated to remain in service and protect them against damage during selective demolition operations. The main HVAC units pull air directly from the plenum.
B. Maintain OSHA and EPA guidelines for indoor air quality for office buildings.
C. Air quality monitoring shall be performed for the duration of the Project.
   1. Results shall be provided to the Owner daily.
D. Ensure that idling time for all heavy equipment is minimized to reduce on-Site emissions.
E. Maintain equipment in good mechanical condition.
F. Cover trucks hauling dirt.
G. Limit dust emissions during periods of high winds (greater than 15 miles per hour).
H. Replace ground cover in disturbed areas as soon as possible.
I. Enclose, cover, water, or apply soil binders to exposed stockpiles.
J. Remove earth tracked onto neighboring paved roads at least once daily.
K. Limit equipment speed to 10 miles per hour in unpaved areas.
L. Construction dust shall be minimized and any increased cost from filter fouling of air handling equipment due to construction work shall be passed on to the contractor.
M. Any product with a volatile odor, off gas, volatile aromatic compounds shall not be permitted to enter any air handling devices.

1.13 PROTECTION OF EXISTING STRUCTURES AND UNDERGROUND FACILITIES

A. The Drawings may indicate existing above and below-grade structures, drainage lines, storm drains, sewers, water lines, gas lines, electrical lines, condensate lines, and other similar items and Underground Facilities that are known to Owner.
B. Where overhead service to a structure, known to receive service, does not exist, then underground service shall be assumed to exist.
C. A 0.5 inch water supply line exists on the roof as indicated.
D. No attempt has been made to locate private utilities on private property such as sprinkler irrigation systems or electrical conduits. Contact the property owners prior to construction.
E. In addition to reporting, if a utility is damaged, Contractor shall take appropriate action as provided in Document 00700 (General Conditions).

F. Additional compensation or extension of time on account of utilities not indicated or otherwise brought to Contractor's attention including reasonable action taken to protect or repair damage shall be determined as provided in Document 00700 (General Conditions).
G. Provide Utility Protection Plan, including:
   1. Indication of all utilities that are expected to conflict with Work, including proposed roof sample locations.
   2. Proposed measures to protect active utilities from damage and removal of inactive utilities, as necessary.
   3. Proposed measures to be taken in the event an active utility is damaged or broken due to Contractor's activities.

1.14 PERMITS

A. Permits, agreements, or written authorizations that are known by Owner to apply to this Project are listed below:
   1. *County of Sonoma Building Permit*. Contractor shall obtain the necessary permit from PRMD for the Work under this Contract requiring a permit.
B. All other permits that may be required, including, but not limited to, electrical, mechanical, fire prevention, irrigation, grading, slope protection, tree cutting, dechlorinated water discharge, and flushing water discharge have not been applied for and shall be obtained by Contractor.
C. Applicable permit fees, specifically listed in Document 00700 (General Conditions), will be reimbursed by Owner to the extent specified therein. All other permit fees shall be paid by Contractor.
D. Furnish copies of Contractor-obtained permits to Owner.

1.15 RIGHTS-OF-WAY

A. Owner owns the property as indicated.
B. Owner has obtained permits-to-enter for access to roof, indicated as "Shared Right of Way." Owner's permits-to-enter are valid through December 31, 2015.

1.16 DOCUMENT TRACKING

A. Owner will maintain a computerized document control system to monitor the generation, status, and filing of documents. Documents such as, but not limited to, Contracts, Cost Proposals, Change Orders (proposed and approved), Meeting Minutes, Schedules and Reports, Payment Applications, certificates of insurance, Safety Reports, Requests for Information, Requests for Substitutions, correspondence, communications, notices, Submittals, transmittals, and logs shall be submitted electronically for Owner to control the documents using the computerized system. Owner will use the computerized system to track and manage all documents on the Project, after Notice to Proceed, to the greatest extent possible.
B. Provide all Project documents to Owner in electronic format, unless otherwise required by the Contract Documents. If file size prohibits electronic transmittal, submit to Owner on compact disk (CD).
C. Provide electronic format documents in searchable portable document format (PDF), unless otherwise required by the Contract Documents or directed in writing by Owner.

PART 2 PRODUCTS

2.1 PRODUCTS ORDERED IN ADVANCE

A. As provided in Section 01200 (Price and Payment Procedures), paragraph 1.5E, and subject to all other provisions of the Contract Documents, Owner will pay for the following materials and equipment prior to incorporation into the Work:
   1. Materials:
      a. None.
   2. Equipment:
      a. None.

2.2 OWNER-FURNISHED PRODUCTS

A. Owner-Furnished Products:
   1. HVAC Unit 16, boiler
B. Owner's Responsibilities:
   1. Arrange for and deliver Owner-reviewed Shop Drawings, Product Data, and Samples, to Contractor.
   2. Arrange and pay for delivery to Site.
   3. On delivery, inspect products jointly with Contractor.
   4. Submit claims for transportation damage and replace damaged, Defective, or deficient items.
   5. Arrange for manufacturers' warranties, inspections, and service.
C. Contractor's Responsibilities:
   1. Review Owner-reviewed Shop Drawings, Product Data, and Samples.
   2. Receive and unload products at Site; inspect for completeness or damage jointly with Owner.
   3. Handle, store, install, and finish products.
   4. Repair or replace items damaged after receipt.
   5. Install into Project per Contract Documents.

PART 3 EXECUTION – NOT USED

END OF SECTION

SECTION 01200

PRICE AND PAYMENT PROCEDURES

PART 1 GENERAL

1.1 SUMMARY

A. Section includes:
   1. Description of requirements and procedures for determining amount of Work performed and for obtaining payment for Work performed.
   2. Contingency Reserve

1.2 REFERENCES

A. California Public Contract Code
B. Code of Civil Procedure

1.3 SCOPE OF WORK

Work under Contract Documents, or under any Bid item, allowance, or Alternate, shall include all labor, materials, taxes, transport, handling, storage, supervision, administration, and all other items necessary for the satisfactory completion of Work, whether or not expressly specified or indicated.

1.4 DETERMINATION OF QUANTITIES

Quantity of Work to be paid for under any item for which a unit price is fixed in Contract Documents shall be number, as determined by Owner, of units of Work satisfactorily completed in accordance with Contract Documents or as directed by Owner. Unless otherwise provided, determination of number of units of Work so completed will be based, so far as practicable, on actual measurement or count within prescribed or ordered limits, and no payment will be made for Work done outside of limits. Measurements and computations will be made by methods set forth in Contract Documents, including without limitation this Section 01200. If methods are not so set forth, measurements shall be made in any manner which Owner considers appropriate for class of Work measured (e.g., pre-assigned values, percentage completion, units completed or incremental Milestones). Contractor must immediately inform Owner of any disputes regarding quantity measurements and shall immediately supply Owner with any documentation supporting the disputed measurements.

1.5 SCOPE OF PAYMENT

A. Except as otherwise expressly stated in Section 01100 (Summary), payment to Contractor at the unit price or other price fixed in Contract Documents for performing Work required under any item, or (if the Contract is on a single lump sum price basis) at the lump sum price fixed in the Contract Documents for performing all Work required under Contract Documents, and as either may be adjusted pursuant to any approved Change Order or Construction Change Directive, shall be full compensation for completing, in accordance with Contract Documents, all Work required under the item or under Contract Documents, and for all expense incurred by Contractor for any purpose in connection with the performance and completion of said Work, including all incidental Work necessary for completion of the Work.
B. The Contract Sum, whether lump sum, unit price or otherwise, shall be deemed to include all costs necessary to complete required Work, all costs (if any) for loss or damage arising

from nature of Work or prosecution of the Work, and from action of elements. Unless Contract Documents expressly provide otherwise, the Contract Sum shall be deemed to include:

1. Any and all costs arising from any unforeseen difficulties which may be encountered during, and all risks of any description connected with, prosecution of Work or prosecution of Bid item (whether lump sum or unit price) until acceptance by Owner;
2. All expenses incurred due to suspension, or discontinuance of Work or discontinuance of Bid item (whether lump sum or unit price) as provided in Contract Documents;
3. Escalation to allow for cost increases between time of Contract Award and completion of Work or completion of Bid item (whether lump sum or unit price).

C. Whenever it is specified herein that Contractor is to do Work or furnish materials of any class for which no price is fixed in Contract Documents, it shall be understood that Contractor is to do such Work or furnish such materials without extra charge or allowance or direct payment of any sort, and that cost of doing Work or furnishing materials is to be included in price Bid, unless it is expressly specified herein, in particular cases, that Work or material is to be paid for as extra Work.

D. Unit Prices shall apply to Work covered by unit prices so long as actual quantities performed on the Project are not less than 75 percent or greater than 125 percent of the estimated quantities contained in Document 00400 (Bid Form) or otherwise referenced in Section 01100 (Summary). If actual quantities exceed these parameters, then the unit price shall be adjusted by an amount to reflect the Contractor's incremental cost differential resulting from increased or decreased economies of scale. For quantities reduced to less than 75 percent of the estimated Bid quantity, the payment for the total pay quantity of such item of Work will in no case exceed the payment that would have been made for the performance of 75 percent of the estimated Bid quantity for such item at the original Contract unit price.

E. No payment shall be made for materials or equipment not yet incorporated into the Work, except as specified in Section 01100 (Summary).

F. For any materials and equipment referenced in Section 01100 (Summary) as subject to payment prior to incorporation into the Work, where Contractor requests payment on the basis of such materials and equipment not incorporated in the Work, Contractor must satisfy the following conditions:

1. The materials and/or equipment shall be delivered and suitably stored at the Site or at another local location agreed to in writing, for example, a mutually acceptable warehouse;
2. Full title to the materials and/or equipment shall vest in Owner at the time of delivery to the Site, warehouse or other storage location;
3. Obtain a negotiable warehouse receipt, endorsed over to Owner for materials and/or equipment stored in an Off Site warehouse. No payment will be made until such endorsed receipts are delivered to Owner;
4. Stockpiled materials and/or equipment shall be available for Owner inspection, but Owner shall have no obligation to inspect them and its inspection or failure to inspect shall not relieve Contractor of any obligations under the Contract Documents. Materials and/or equipment shall be segregated and labeled or tagged to identify these specific Contract Documents;
5. After delivery of materials and/or equipment, if any inherent or acquired defects are discovered, Defective materials and/or equipment shall be removed and replaced with suitable materials and/or equipment at Contractor's expense;

6. At Contractor's expense, insure the materials and/or equipment against theft, fire, flood, vandalism, and malicious mischief, as well as any other coverages required under the Contract Documents;
7. Contractor's Application for Payment shall be accompanied by a bill of sale, invoice or other documentation warranting that Owner has received the materials and equipment free and clear of all liens and evidence that the materials and equipment are covered by appropriate property insurance and other arrangements to protect Owner's interest therein, all of which must be satisfactory to Owner. This documentation shall include, but not be limited to, conditional releases of mechanics' liens and stop notices from all those providing materials and equipment as to which the Application for Payment relates, as well as unconditional releases of the same from the same as to the previous Application for Payment for which they have not already been provided.

G. Amounts previously paid for materials and equipment prior to incorporation into the Work shall be deducted from amounts otherwise due Contractor as they are incorporated.

1.6 BASIS OF PAYMENT

A. Unit Price Quantities: When estimated quantity for specific portions of Work is listed in Document 00400 (Bid Form), quantity of Work to be paid for shall be actual number of units satisfactorily completed, as determined by Owner and certified by Contractor, in accordance with Contract Documents.
B. Lump Sum: When estimated quantity for specific portion of Work is not indicated and unit is designated as lump sum, payment will be on a lump sum basis for Work satisfactorily completed in accordance with Contract Documents.
C. Allowances: Allowance items (if any) will be paid for as provided in Section 01100 (Summary). Funds authorized for Allowance Work will not be released for Contract payments unless Owner has authorized Allowance Work in writing.
D. Owner does not expressly, or by implication, agree, warrant, or represent in any manner, that actual amount of Work will correspond with amount shown or estimated and reserves right to increase or decrease amount of any class or portion of Work, to leave out entire Bid item or items, or to add work not originally included in Bid or Contract Documents, when in its judgment such change is in best interest of Owner. No change in Work shall be considered a waiver of any other condition of Contract Documents. No claim shall be made for anticipated profit, for loss of profit, for damages, or for extra payment whatever, except as otherwise expressly provided for in Contract Documents, because of any differences between amount of Work actually done and estimated amount as set forth herein, or for elimination of Bid items.

1.7 PROGRESS PAYMENTS

A. Owner's General Manager is authorized to approve progress payments in conformance with Contract Documents and the Auditor/Controller of the County of Sonoma is authorized to process such payments upon their submission by the General Manager.
B. If requested by Contractor, progress payments will be made monthly.
C. Schedule of Values:
   1. Within the time set forth in Document 00700 (General Conditions), submit a detailed breakdown of Contractor's Bid by scheduled Work items and/or activities, including coordination responsibilities and Project Record Documents responsibilities. Where more than one Subcontractor comprises the work of a Work item or activity, the Schedule of Values shall show a separate line item for each subcontract. Furnish such breakdown of the total Contract Sum by assigning dollar values (cost estimates) to each

applicable Progress Schedule network activity, which cumulative sum equals the total Contract Sum. The format and detail of the breakdown shall be as directed by Owner to facilitate and clarify future progress payments to Contractor for direct Work under Contract Documents. This breakdown shall be referred to as the Schedule of Values.

2. Contractor's overhead, profit, insurance, cost of bonds (except to the extent expressly identified in a Bid item) and/or other financing, as well as "general conditions costs," (e.g., Site cleanup and maintenance, temporary roads and access, off-Site access roads, temporary power and lighting, security, and the like), shall be prorated through all activities so that the sum of all the Schedule of Values line items equals Contractor's total Contract Sum, less any allowances designated by Owner. Scheduling, record documents and quality assurance control shall be separate line items.
3. Owner will review the breakdown in conjunction with the Progress Schedule to ensure that the dollar amounts of this Schedule of Values are, in fact, fair market cost allocations for the Work items listed. Upon favorable review by Owner, Owner will accept this Schedule of Values for use. Owner shall be the sole judge of fair market cost allocations.
4. Owner will reject any attempt to increase the cost of early activities, i.e., "front loading," resulting in a complete reallocation of moneys until such "front loading" is corrected. Repeated attempts at "front loading" may result in suspension or termination of the Work for default, or refusal to process progress payments until such time as the Schedule of Values is acceptable to Owner.

D. Monthly Report Sheets and Applications for Payment: Contractor shall establish and maintain records of cost of the Work in accordance with generally accepted accounting practices; reconcile the amount of Work completed monthly with Owner, and sign Owner's monthly report sheet certifying the Work is done. Monthly report sheets shall be considered the true record of the Cost of the Work and Contractor shall submit in a form acceptable to Owner an itemized cost breakdown of Contractor's record of Cost of the Work together with supporting data and any certification required by Owner. In addition:

1. On or before the sooner of (a) the 20th Day of each month and (b) receipt of Owner's approval of the updated Schedule as required by Section 01320 (Progress Schedules and Reports), Owner and Contractor will reconcile any differences in the field, based on the reconciled monthly report sheets, and Contractor shall submit to Owner an Application for Payment for the cost of the Work put in place during the period from the 15th Day of the previous month to the 15th Day of the current month, along with the Owner-approved updated Schedule. Such Applications for Payment shall be for the total value of activities completed or partially completed, including approved activity costs, based upon Schedule of Values prices (or Bid item prices if unit price) of all labor and materials incorporated in the Work up until midnight of the last Day of that one month period, less the aggregate of previous payments. Accumulated retainage shall be shown as separate item in payment summary. If Contractor is late submitting its Application for Payment, that Application may be processed at any time during the succeeding one-month period, resulting in processing of Contractor's Application for Payment being delayed for more than a Day for Day basis.
2. Applications for Payment may include, but are not necessarily limited to the following:
   a. Material, equipment, and labor incorporated into the Work, less any previous payments for the same.
   b. Up to 75 percent of the cost of equipment identified in paragraph 1.5F of this Section 01200 (if any), if purchased and delivered to the Site or stored off Site, as may be approved by Owner.

c. Up to 50 percent of the cost of materials identified in paragraph 1.5F of this Section 01200 (if any), specifically fabricated for the Project that are not yet incorporated into the Work.

3. At the time any Application for Payment is submitted, certify in writing the accuracy of the Application and that Contractor has fulfilled all scheduling requirements of Document 00700 (General Conditions) and Section 01320 (Progress Schedules and Reports), including updates and revisions. A responsible officer of Contractor shall execute the certification.
4. No progress payment will be processed prior to Owner receiving all requested, acceptable schedule update information. Failure to submit a schedule update complying with Section 01320 justifies denying the entire Application for Payment, or in Owner's discretion withholding amounts as described in paragraph 1.7E.10 of this Section 01200.
5. Each Application for Payment shall list each Change Order and Construction Change Directive ("CCD") executed prior to date of submission, including the Change Order/CCD Number, and a description of the Work activities, consistent with the descriptions of original Work activities. Submit a monthly Change Order/CCD status log to Owner.
6. If Owner requires substantiating data, submit information requested by Owner, with cover letter identifying Project, Application for Payment number and date, and detailed list of enclosures.
7. If Contractor fails or refuses to participate in monthly Work reconciliations or other construction progress evaluation with Owner, Contractor shall not receive current payment until Contractor has participated fully in providing construction progress information and schedule update information to Owner.

E. Progress Payments

1. Owner will review Contractor's Application for Payment following receipt. If adjustments need to be made to percent of completion of each activity, Owner will make appropriate notations and return to Contractor. Contractor shall revise and resubmit. All parties shall update percentage of completion values in the same manner, i.e., express value of an accumulated percentage of completion to date.
2. Each Application for Payment may be reviewed by Owner and/or inspectors to determine whether the Application for Payment is proper, and shall be rejected, revised, or approved by Owner pursuant to the Schedule of Values prepared in accordance with paragraph 1.7C of this Section 01200.
3. If it is determined that the Application for Payment is not proper and suitable for payment, Owner will return it to the Contractor as soon as practicable, but no later than seven Days after receipt, together with a document setting forth in writing the reasons why the Application for Payment is not proper. If Owner determines that portions of the Application for Payment are not proper or not due under the Contract Documents, then Owner may approve the other portions of the Application for Payment, and in the case of disputed items or Defective Work not remedied, may withhold up to 150 percent of the disputed amount from the progress payment.
4. Pursuant to California Public Contract Code Section 20104.50, if Owner fails to make any progress payment within 30 Days after receipt of an undisputed and properly submitted Application for Payment from Contractor, Owner shall pay interest to the Contractor equivalent to the legal rates set forth in subdivision (a) of Section 685.010 of the Code of

Civil Procedure. The 30-Day period shall be reduced by the number of Days by which Owner exceeds the seven-Day return requirement set forth herein.

5. As soon as practicable after approval of each Application for Payment for progress payments, Owner will pay to Contractor in manner provided by law, an amount equal to 95 percent of the amounts otherwise due as provided in the Contract Documents, or a lesser amount if so provided in Contract Documents, provided that payments may at any time be withheld if, in judgment of Owner, Work is not proceeding in accordance with Contract, or Contractor is not complying with requirements of Contract, or to comply with stop notices or to offset liquidated damages accruing or expected.
6. Before any progress payment or final payment is due or made, Contractor shall submit satisfactory evidence that Contractor is not delinquent in payments to employees, Subcontractors, suppliers, or creditors for labor and materials incorporated into Work. This specifically includes, without limitation, conditional lien release forms for the current progress payment and unconditional release forms for past progress payments.
7. Owner reserves and shall have the right to withhold payment for any equipment and/or specifically fabricated materials that, in the sole judgment of Owner, are not adequately and properly protected against weather and/or damage prior to or following incorporation into the Work.
8. Granting of progress payment or payments by Owner, or receipt thereof by Contractor, shall not be understood as constituting in any sense acceptance of Work or of any portion thereof, and shall in no way lessen liability of Contractor to replace unsatisfactory Work or material, though unsatisfactory character of Work or material may have been apparent or detected at time payment was made.
9. When Owner shall charge sum of money against Contractor under any provision of Contract Documents, amount of charge shall be deducted and retained by Owner from amount of next succeeding progress payment or from any other moneys due or that may become due Contractor under Contract. If, on completion or termination of Contract, such moneys due Contractor are found insufficient to cover Owner's charges against it, Owner shall have right to recover balance from Contractor or Sureties.
10. If Contractor fails to submit an acceptable Progress Schedule update, or fails to bring an acceptable Project Record Drawings update to Progress Payment Meeting, Owner may retain 5% of each Progress Payment amount thereafter (in addition to any other retention) until Owner's acceptance of a Progress Schedule or Project Record Drawings update. This retention shall apply cumulatively.

1.8 FINAL PAYMENT

A. As soon as practicable after all required Work is completed in accordance with Contract Documents, including punchlist, testing, record documents and Contractor maintenance after Final Acceptance, Owner will pay to Contractor, in manner provided by law, unpaid balance of Contract Sum of Work (including without limitation retentions), or whole Contract Sum of Work if no progress payment has been made, determined in accordance with terms of Contract Documents, less sums as may be lawfully retained under any provisions of Contract Documents or by law.

B. Prior progress payments shall be subject to correction in the final payment. Owner's determination of amount due as final payment shall be final and conclusive evidence of amount of Work performed by Contractor under Contract Documents and shall be full measure of compensation to be received by Contractor.

C. Contractor and each assignee under an assignment in effect at time of final payment shall execute and deliver at time of final payment, and as a condition precedent to final payment, Document 00650 (Agreement and Release of Any and All Claims).

1.9 EFFECT OF PAYMENT

A. Payment will be made by Owner, based on Owner's observations at the Site and the data comprising the Application for Payment. Payment will not be a representation that Owner has:
   1. Made exhaustive or continuous on-Site inspections to check the quality or quantity of Work;
   2. Reviewed construction means, methods, techniques, sequences, or procedures;
   3. Reviewed copies of requisitions received from Subcontractors and material suppliers and other data requested by Owner to substantiate Contractor's right to payment; or
   4. Made examination to ascertain how or for what purpose Contractor has used money previously paid on account of the Contract Sum.

1.10 CONTINGENCY RESERVE

A. Owner will authorize and direct Contractor regarding provisions in this paragraph 1.10.
B. Contingency Reserve Amount: as listed in Document 00520 (Agreement).
C. Cost shall be determined for CCD Work as provided in Section 01250 (Modification Procedures) or on a time-and-materials basis if agreed by Contractor and Owner.
D. Prior to final payment, an appropriate Change Order will be issued to reflect actual amounts due Contractor on account of Work covered by this Contingency Reserve, and the Contract Sum will be correspondingly adjusted.

PART 2 PRODUCTS – NOT USED

PART 3 EXECUTION – NOT USED

END OF SECTION

SECTION 01250

MODIFICATION PROCEDURES

PART 1 GENERAL

1.1 SUMMARY

A. Section includes:
   1. Description of general procedural requirements for alterations, Modifications, and extras.

1.2 GENERAL

A. Any change in scope of Work or deviation from Contract Documents including, without limitation, extra Work, or alterations or additions to or deductions from the original Work, shall not invalidate the original Contract, and shall be performed under the terms of the Contract Documents.
B. Only Contractor or Owner may initiate changes in scope of Work or deviation from Contract Documents.
   1. Contractor may initiate changes by submitting RFIs, Notice of Differing Site Conditions, or Notice of Hazardous Waste or Materials Conditions.
      a. RFIs shall be submitted to seek clarification of or request changes in the Contract Documents.
      b. Notices of Differing Site Conditions shall be submitted in accordance with Document 00700 (General Conditions).
      c. Notices of Hazardous Waste or Materials Conditions shall be submitted in accordance with Document 00700 (General Conditions).
   2. Contractor shall be responsible for its costs to implement and administer RFIs throughout the Contract duration. Regardless of the number of RFIs submitted, Contractor shall not be entitled to additional compensation for administrative costs. Contractor shall be responsible for both Owner and its Engineer's administrative costs for answering RFIs where the answer could reasonably be found by reviewing the Contract Documents, as determined by Owner; at Owner's discretion, such costs may be deducted from progress payments or final payment.
   3. Owner may initiate changes by issuing a Supplemental Instruction, which may revise, add to or subtract from the Work.
   4. Owner may initiate changes in the Work or Contract Time by issuing RFPs to Contractor. Such RFPs will detail all proposed changes in the Work and request a quotation of changes in Contract Sum and Contract Time from Contractor.
   5. Owner may also, by Construction Change Directive ("CCD"), order changes in the Work within the general scope of the Contract consisting of additions, deletions, or other revisions, the Contract Sum and Contract Time being adjusted accordingly. A CCD shall be used in the absence of total agreement on the terms of a Change Order and may, upon notice, consist of a Change Order executed by Owner only.

1.3 PROCEDURES

A. Cost Proposal and Procedures: Whenever Contractor is required in this Section 01250 to prepare a Cost Proposal, and whenever Contractor is entitled to submit a Cost Proposal and elects to do so, Contractor shall prepare and submit to Owner for consideration a Cost Proposal using the form attached to this Section 01250. All Cost Proposals must contain a

complete breakdown of costs of credits, deducts, and extras; and itemizing materials, labor, taxes, overhead and profit. All Subcontractor Work shall be so indicated. Individual entries on the Cost Proposal form shall be determined as provided in paragraphs 1.4 and 1.5 of this Section 01250. After receipt of a Cost Proposal with a detailed breakdown, Owner will act promptly thereon.

1. If Owner accepts a Cost Proposal, Owner will prepare Change Order for Owner and Contractor signatures.
2. If Cost Proposal is not acceptable to Owner because it does not agree with cost and/or time included in Cost Proposal, Owner will submit in a response what it believes to be a reasonable cost and/or adjustment, if any. Except as otherwise provided in this Section 01250, Contractor shall have seven Days in which to respond to Owner with a revised Cost Proposal.
3. When necessity to proceed with a change does not allow the Owner sufficient time to conduct a proper check of a Cost Proposal (or revised Cost Proposal), Owner may order Contractor to proceed on basis to be determined at earliest practical date. In this event, value of change, with corresponding equitable adjustment to Contract, shall not be more than increase or less than decrease proposed.

B. Request for Information (RFI): Whenever Contractor requires information regarding the Project or Contract Documents, or receives a request for information from a Subcontractor, Contractor may prepare and deliver an RFI to Owner, using the Contractor interface for Owner's project management software. Contractor must submit time critical RFIs at least 30 Days before scheduled start date of the affected Work activity. Contractor shall reference each RFI to an activity of Progress Schedule and shall note time criticality of the RFI, indicating time within which a response is required. Contractor's failure to reference RFI to an activity on the Progress Schedule and note time criticality on the RFI shall constitute Contractor's waiver of any claim for time delay or interruption to the Work resulting from any delay in responding to the RFI.

1. Owner will respond within 15 Days from receipt of RFI with a written response to Contractor. Contractor shall distribute response to all appropriate Subcontractors.
2. If Contractor is satisfied with the response and does not request change in Contract Sum or Contract Time, then the response shall be executed without a change.
3. If Contractor believes the response is incomplete, Contractor shall issue another RFI to Owner clarifying original RFI. Additionally, Owner may return RFI requesting additional information should original RFI be inadequate in describing condition.
4. If Contractor believes that the response results in change in Contract Sum or Contract Time, Contractor shall notify Owner in writing within 15 Days after receiving the response. If Owner disagrees with Contractor, then Contractor may give notice of intent to submit a Claim as described in Article 12 of Document 00700 (General Conditions), and submit its Claim within 30 Days. If Owner agrees with Contractor, then Contractor must submit a Cost Proposal within 21 Days of receiving the response to the RFI. Contractor's failure to deliver either the foregoing notice and Claim or Cost Proposal by the respective deadlines stated in the foregoing sentences shall result in waiver of the right to file a Cost Proposal or Claim.

C. Supplemental Instruction: Owner may issue Supplemental Instruction to Contractor.

1. If Contractor is satisfied with Supplemental Instruction and does not request change in Contract Sum or Contract Time, then Supplemental Instruction shall be executed without a Change Order.

2. If Contractor believes that Supplemental Instruction results in change in Contract Sum or Contract Time, then Contractor must submit a Cost Proposal to Owner within 21 Days of receiving the Supplemental Instruction.

D. Construction Change Directives: If at any time Owner believes in good faith that a timely Change Order will not be agreed upon using the foregoing procedures, Owner may issue a CCD with its estimated cost and/or time adjustment. Upon receipt of CCD, Contractor shall promptly proceed with the change of Work involved and concurrently respond to Owner's CCD within 10 Days.
   1. Contractor's response must be any one of following:
      a. Return CCD signed, thereby accepting Owner's response, time, and cost.
      b. Submit a (revised if applicable) Cost Proposal with supporting documentation (if applicable, reference original Cost Proposal number followed by letter A, B, etc. for each revision), if Owner so requests.
      c. Give notice of intent to submit a Claim as described in Article 12 of Document 00700 (General Conditions), and submit its Claim within 30 Days.
   2. If the CCD provides for an adjustment to the Contract Sum, the adjustment shall be based on one of the following methods:
      a. Mutual acceptance of a lump sum properly itemized and supported by sufficient substantiating data to permit evaluation.
      b. Unit prices stated in the Contract Documents or subsequently agreed upon.
      c. Cost to be determined in a manner agreed.
   3. CCD signed by Contractor indicates the agreement of Contractor therewith, including adjustment in Contract Sum and Contract Time or the method for determining them. Such agreement shall be effective immediately and shall be recorded as a Change Order.
   4. If Contractor does not respond promptly or disagrees with the method for adjustment in the Contract Sum, the method and the adjustment shall be determined by Owner on the basis of reasonable expenditures and savings of those performing the Work attributable to the change including, in case of an increase in the Contract Sum, a reasonable allowance for overhead and profit. If the parties still do not agree on the price for a CCD, Contractor may file a Claim per Article 12 of Document 00700 (General Conditions). Contractor shall keep and present, in such form as Owner may prescribe, an itemized accounting together with appropriate supporting data. Unless otherwise provided in the Contract Documents, costs for the purposes of this paragraph shall be limited to those provided in paragraphs 1.4 and 1.5 of this Section 01250.
   5. Pending final determination of cost to Owner, amounts not in dispute may be included in Applications for Payment. The amount of credit to be allowed by Contractor to Owner for a deletion or change that results in a net decrease in the Contract Sum shall be actual net cost as confirmed by Owner. When both additions and credits covering related Work or substitutions are involved in a change, the allowance for overhead and profit shall be figured on the basis of net increase, if any, with respect to that change.

E. Owner Requested RFP: Contractor shall furnish a Cost Proposal within 21 Business Days of Owner's RFP. Upon approval of Cost Proposal, Owner will issue a Change Order directing Contractor to proceed with extra Work. If the parties do not agree on the price, Owner may either issue a CCD or decide the issue per Article 12 of Document 00700 (General Conditions). Contractor shall perform the changed Work notwithstanding any claims or disagreements of any nature.

F. Differing Site Conditions: Contractor shall submit Notices of Differing Site Conditions to resolve problems regarding differing underground Site conditions encountered in the

execution of the Work pursuant to paragraph 13.4 of Document 00700 (General Conditions), which shall govern. If Owner determines that a change in Contract Sum or Contract Time is justified, Owner will issue RFP or CCD.

G. Hazardous Waste Conditions: Contractor shall submit Notices of Hazardous Waste or Materials Conditions to resolve problems regarding hazardous materials encountered in the execution of the Work pursuant to paragraph 13.5 of Document 00700 (General Conditions), which shall govern. If Owner determines that a change in Contract Sum or Contract Time is justified, Owner will issue RFP or CCD.

H. All Changes:
   1. Documentation of Change in Contract Sum and Contract Time:
      a. Contractor shall maintain detailed records of Work performed on a time-and-material basis.
      b. Contractor shall document each proposal for a change in cost or time with sufficient data to allow evaluation of the proposal.
      c. Contractor shall, on request, provide additional data to support computations for:
         1) Quantities of products, materials, labor, and equipment.
         2) Taxes.
         3) Justification for any change in Contract Time and new Progress Schedule showing revision due, if any.
         4) Credit for deletions from Contract, similarly documented.
      d. Contractor shall support each claim for additional costs, and for Work performed on a cost-and-percentage basis, with additional information including:
         1) Credit for deletions from Contract, similarly documented.
         2) Origin and date of claim.
         3) Dates and times Work was performed and by whom.
         4) Time records and wage rates paid.
         5) Invoices and receipts for products, materials, equipment, and subcontracts, similarly documented.

I. Correlation of Other Items:
   1. Contractor shall revise Schedule of Values and Application for Payment forms to record each authorized Change Order or CCD as a separate line item and adjust the Contract Sum as shown thereon prior to the next monthly pay period.
   2. Contractor shall revise the Progress Schedules prior to the next monthly pay period.
   3. Contractor shall enter changes in Project Record Documents prior to the next monthly pay period.

J. Responses: For all responses for which the Contract Documents, including without limitation this Section 01250, do not provide a specific time period, recipients shall respond within a reasonable time.

1.4 COST DETERMINATION

A. Total cost of extra Work or of Work omitted shall be the sum of labor costs, material costs, equipment rental costs, and specialist costs as defined herein plus overhead and profit as allowed herein. This limit applies in all cases of claims for extra Work, whether calculating Cost Proposals, Change Orders or CCDs, or calculating claims of all types, and applies even in the event of fault, negligence, strict liability, or tort claims of all kinds, including strict liability or negligence. Contractor may recover no other costs arising out of or connected with the performance of extra Work, of any nature. No special, incidental or consequential damages may be claimed or recovered against Owner, its representatives or agents, whether

arising from breach of Contract, negligence, or strict liability, unless specifically authorized in the Contract Documents.

B. Markup for Overhead and Profit: (Overhead shall be as defined in paragraph 1.8 of this Section 01250)
   1. Markup for overhead and profit on labor for extra Work shall not exceed 15 percent.
   2. Markup for overhead and profit on materials for extra Work shall not exceed 15 percent.
   3. Markup for overhead and profit on owner-operated equipment for extra Work shall not exceed 15 percent.
   4. Markup for overhead and profit on equipment for extra Work shall not exceed 10 percent.
   5. When extra Work is performed by a first tier Subcontractor, Contractor shall receive a 5 percent markup on Subcontractors' total costs of extra Work. First tier Subcontractor's markup on its Work shall not exceed percentages listed in paragraphs 1.4B.1, 1.4B.2, 1.4B.3, and 1.4B.4 immediately above.
   6. When extra Work is performed by a lower tier Subcontractor, Contractor, first tier Subcontractors, and lower tier Subcontractors shall divide (as mutually agreed) a total of 5 percent markup on the lower tier Subcontractors' total costs of extra Work.
   7. Notwithstanding the foregoing, in no case shall the total markup on any extra Work exceed 20 percent of the direct cost, notwithstanding the actual number of Contract tiers.
   8. On proposals covering both increases and decreases in Contract Sum, markup for overhead and profit shall be included on the net amount as determined in this paragraph 1.4.
   9. The markup shall include profit, small tools, cleanup, engineering, supervision, warranties, cost of preparing the cost proposal, jobsite overhead, and home office overhead.

C. Taxes:
   1. All State sales tax, use tax, and Sonoma County and applicable City sales taxes shall be included.
   2. Federal and Excise tax shall not be included.

D. Owner-Operated Equipment: When owner-operated equipment is used to perform extra Work, Contractor will be paid as follows:
   1. Payment for cost of equipment will be made at no more than rates of such equipment established in paragraph 1.5C of this Section 01250.
   2. Payment for cost of labor will be made at no more than rates of such labor established by collective bargaining agreements for type of worker and location of Work, whether or not owner-operator is actually covered by such an agreement.
   3. Invoices for owner-operated equipment need not itemize labor and equipment costs, unless specifically requested by Owner. In any event, the total rate for owner-operated equipment shall not exceed the combined rates for labor and equipment listed in paragraphs 1.4D.1 and 1.4D.2 above.

E. Accord and Satisfaction: Every Change Order and accepted CCD shall constitute a full accord and satisfaction, and release, of all Contractor (and if applicable, Subcontractor) claims for additional time, money or other relief arising from or relating to the subject matter of the change including, without limitation, impacts of all types, cumulative impacts, inefficiency, overtime, delay, and any other type of claim. Contractor may elect to reserve its rights to disputed claims arising from or relating to the changed Work at the time it signs a Change Order or accepts a CCD, but must do so expressly in a writing delivered concurrently with the executed Change Order or approved CCD, and must also submit a

Claim for the reserved disputed items pursuant to Article 12 of Document 00700 (General Conditions) no later than 30 Days of Contractor's first written notice of its intent to reserve rights.

1.5 COST BREAKDOWN

A. Labor: Contractor will be paid cost of labor for workers (including forepersons when authorized by Owner) used in actual and direct performance of extra Work. Labor rate, whether employer is Contractor, Subcontractor or other forces, will be sum of following:
   1. Actual Wages: Actual wages paid shall include any employer payments to or on behalf of workers for health and welfare, pension, vacation, and similar purposes.
   2. Labor surcharge: Payments imposed by local, county, state, and federal laws and ordinances, and other payments made to, or on behalf of, workers, other than actual wages as defined in paragraph 1.5A.1 of this Section 01250, such as taxes and insurance. Labor surcharge shall be and shall not exceed that set forth in Caltrans official labor surcharges schedule which is in effect on date upon which extra Work is accomplished and which schedule is incorporated herein by reference as though fully set forth herein.

B. Material: Only materials furnished by Contractor and necessarily used in performance of extra Work will be paid for. Cost of such materials will be cost, including sales tax, to purchaser (Contractor, Subcontractor or other forces) from supplier thereof, except as the following are applicable:
   1. If cash or trade discount by actual supplier is offered or available to purchaser, it shall be credited to Owner notwithstanding fact that such discount may not have been taken.
   2. For materials salvaged upon completion of extra Work, salvage value of materials shall be deducted from cost, less discounts, of materials.
   3. If cost of a material is, in opinion of Owner, excessive, then cost of material shall be deemed to be lowest current wholesale price at which material is available in quantities concerned delivered to Site, less any discounts as provided in paragraph 1.5B.1 of this Section 01250.

C. Equipment: For Contractor- or Subcontractor-owned equipment, payment will be made at rental rates listed for equipment in Caltrans official equipment rental rate schedule which is in effect on date upon which extra Work is accomplished and which schedule is incorporated herein by reference as though fully set forth herein. If there is no applicable rate for an item of equipment, then payment shall be made for Contractor- or Subcontractor-owned equipment at rental rate listed in the most recent edition of the Association of Equipment Distributors (AED) book. For rented equipment, payment will be made based on actual rental invoices. Equipment used on extra Work shall be of proper size and type. If, however, equipment of unwarranted size or type and cost is used, cost of use of equipment shall be calculated at rental rate for equipment of proper size and type, as determined by Owner. Rates paid shall be deemed to cover cost of fuel, oil, lubrication, supplies, small tools, necessary attachments, repairs and maintenance of any kind, depreciation, storage, insurance, and all incidentals. Unless otherwise specified, manufacturer's ratings, and manufacturer-approved modifications, shall be used to classify equipment for determination of applicable rates. Individual pieces of equipment or tools not listed in said publication and having a replacement value of $100 or less, whether or not consumed by use, shall be considered to be small tools and no payment will be made therefor as payment is included in payment for labor. Payment will not be made for time in which equipment is inoperative due to breakdowns.

1. For Contractor or Subcontractor –owned equipment on Site, payment for equipment use will be for time equipment is in operation on extra Work being performed or on standby as approved by Owner.
2. For rented equipment on Site, the following shall be used in computing rental time of equipment:
   a. When hourly rates are listed, less than 30 minutes of operation shall be considered to be ½ hour of operation.
   b. When daily rates are listed, less than four hours of operation shall be considered to be ½ Day of operation.
3. For equipment that must be brought to Site to be used exclusively on extra Work, cost of transporting equipment to Site and its return to its original location shall be determined as follows:
   a. Owner will pay for costs of loading and unloading equipment.
   b. Cost of transporting equipment in low bed trailers shall not exceed hourly rates charged by established haulers.
   c. Cost of transporting equipment shall not exceed applicable minimum established rates of California Public Utilities Commission.
   d. Owner will not make any payment for transporting and loading and unloading equipment if equipment is used on Work in any other way than upon extra Work.
4. For rented equipment, rental period may begin at time equipment is unloaded at Site of extra Work and terminate at end of the performance of the extra Work or Day on which Owner directs Contractor to discontinue use of equipment, whichever first occurs. Excluding Saturdays, Sundays, and Owner's legal holidays, unless equipment is used to perform extra Work on such Days, rental time to be paid per Day shall be four hours for zero hours of operation, six hours for four hours of operation and eight hours for eight hours of operation, time being prorated between these parameters. Hours to be paid for equipment that is operated less than eight hours due to breakdowns, shall not exceed eight less number of hours equipment is inoperative due to breakdowns.

D. Work Performed by Special Forces or Other Special Services: When Owner and Contractor, by agreement, determine that special service or item of extra Work cannot be performed by forces of Contractor or those of any Subcontractors, service or extra Work item may be performed by specialist. Invoices for service or item of extra Work on basis of current market price thereof may be accepted without complete itemization of labor, material, and equipment rental costs when it is impracticable and not in accordance with established practice of special service industry to provide complete itemization. In those instances wherein Contractor is required to perform extra Work necessitating a fabrication or machining process in a fabrication or machine shop facility away from Site, charges for that portion of extra Work performed in such facility may, by agreement, be accepted as a specialist billing. Owner must be notified in advance of all off-Site Work. In lieu of overhead and profit provided in paragraph 1.4B of this Section 01250, 15 percent will be added to specialist invoice price, after deduction of any cash or trade discount offered or available, whether or not such discount may have been taken.

1.6 FORCE-ACCOUNT WORK

A. If it is impracticable because of nature of Work, or for any other reason, to fix an increase or decrease in price definitely in advance, the Contractor may be directed to proceed at a not-to-exceed (NTE) maximum price which shall not under any circumstances be exceeded. Subject to such limitation, such extra Work shall be paid for at actual necessary cost for

Force-Account Work or at the negotiated cost, as determined by Owner. The cost for Force-Account Work shall be determined pursuant to paragraphs 1.4 and 1.5 of this Section 01250.

B. Force-Account Work shall be used when it is not possible or practical to price out the changed Work prior to the start of that Work. In these cases, Force-Account Work will be utilized during the pricing and negotiation phase of the change. Once negotiations have been concluded and a bilateral agreement has been reached, the tracking of the Work under Force-Account is no longer necessary. Force-Account Work shall also be used when negotiations between Owner and Contractor have broken apart and a bilateral agreement on the value of the changed Work cannot be reached. Owner may approve other uses of Force-Account Work.

C. Whenever any Force-Account Work is in progress, definite price for which has not been agreed on in advance, Contractor shall report to Owner each Business Day in writing in detail amount and cost of labor and material used, and any other expense incurred in Force-Account Work on preceding Day, by using the Cost Proposal form attached hereto. No claim for compensation for Force-Account Work will be allowed unless report shall have been made.

D. Whenever Force-Account Work is in progress, definite price for which has not been agreed on in advance, Contractor shall report to Owner when 75 percent of the NTE amount has been expended.

E. Force-Account Work shall be paid as extra Work under this Section 01250. Methods of determining payment for Work and materials provided in this paragraph 1.6 shall not apply to performance of Work or furnishings of material that, in judgment of Owner, may properly be classified under items for which prices are otherwise established in Contract Documents.

1.7 OWNER-FURNISHED MATERIALS

A. Owner reserves right to furnish materials as it deems advisable, and Contractor shall have no claims for costs and overhead and profit on such materials.

1.8 OVERHEAD DEFINED FOR MODIFICATIONS

A. The following constitutes charges that are deemed included in overhead for all Contract Modifications, including Force-Account Work or CCD Work, whether incurred by Contractor, Subcontractors, or suppliers, and Contractor shall not invoice or receive payment for these costs separately:
   1. Drawings: field drawings, Shop Drawings, as-builts, etc., including submissions of drawings
   2. Routine field inspection of Work proposed
   3. General superintendence
   4. General administration and preparation of cost proposals, schedule analysis, Change Orders, and other supporting documentation as necessary
   5. Computer services
   6. Reproduction services
   7. Salaries of project engineer, superintendent, timekeeper, storekeeper, and secretaries
   8. Janitorial services
   9. Temporary on-Site facilities:
      a. Offices
      b. Telephones
      c. Plumbing
      d. Electrical: Power, lighting

e. Platforms
f. Fencing, etc.
g. Water
h. Sanitation

10. Home office expenses
11. Insurance and Bond premiums
12. Procurement and use of vehicles and fuel used coincidentally in Work otherwise included in the Contract Documents
13. Surveying
14. Estimating
15. Protection of Work
16. Handling and disposal fees
17. Permit fees
18. Final cleanup
19. Other incidental Work

1.9 RECORDS AND CERTIFICATION

A. Force-Account (cost reimbursement) charges shall be recorded daily and summarized in Cost Proposal form attached hereto. Contractor or authorized representative shall complete and sign form each Day. Contractor shall also provide with the form: the names and classifications of workers and hours worked by each; an itemization of all materials used; a list by size, type, and identification number of equipment and hours operated; and an indication of all Work performed by specialists.

B. No payment for Force-Account Work shall be made until Contractor submits original invoices substantiating materials and specialists charges.

C. Owner shall have the right to audit all records in possession of Contractor relating to activities covered by Contractor's claims for Modification of Contract, including Force-Account Work and CCD Work.

D. Further, Owner will have right to audit, inspect, or copy all records maintained in connection with this Contract, including financial records and Escrow Bid Documents, in possession of Contractor relating to any transaction or activity occurring or arising out of, or by virtue of, the Contract. If Contractor is a joint venture, right of Owner shall apply collaterally to same extent to records of joint venture sponsor, and of each individual joint venture member. This right shall be specifically enforceable, and any failure of Contractor to voluntarily comply shall be deemed an irrevocable waiver and release of all claims then pending that were or could have been subject to the Article 12 of Document 00700 (General Conditions).

PART 2 PRODUCTS – NOT USED

PART 3 EXECUTION – NOT USED

END OF SECTION

COST PROPOSAL FORM FOLLOWS ON NEXT PAGE

COST PROPOSAL (CP)

404 Aviation Boulevard Roof Replacement
Contract Number 0-80-7 #1A

CP Number: _____
Date: _____
In Response To _____
RFP #, etc.

To: Sonoma County Water Agency
Attention: Contract Administration/Inspection
404 Aviation Boulevard, Santa Rosa, CA 95403-9019

Subject Ref. No: _____
(for Project Manager use only)
Phone: (707) 547-1913
Fax: (707) 544-6123

From: [Insert Contractor's Name/Address]
_____
_____

This Cost Proposal is in response to the above-referenced _____ [insert RFP, etc. as applicable].
Brief description of change(s): _____
_____

ITEM DESCRIPTION	PRIME CONTR.	SUB 1	SUB 2	SUB 3	SUB 4	TOTAL
MATERIAL						
DIRECT LABOR COST						
EQUIPMENT						
Other (Specify)						
Total Cost						
Subcontractor's Markup for Overhead and Profit 15 percent						
Contractor's Markup for Overhead and Profit 15 percent (Labor and Materials)						
Contractor's Markup for Overhead and Profit 10 percent (Equipment Rental)						
Markup for Overhead and Profit to Contractor for Subcontractor's Work 5 percent						
GRAND TOTAL						
(percent of Total Cost above not including any Markup for Overhead and Profit) [Grand Total divided by Total Cost]						
REQUESTED CHANGE IN CONTRACT TIME (DAYS)						

By Contractor: _____ Signature: _____ Date: _____

SECTION 01315

PROJECT MEETINGS

PART 1 GENERAL

1.1 SUMMARY

A. Section Includes:
   1. Descriptions of the required Project meetings for the Work. These meetings include:
      a. Post-Notice of Award Meeting
      b. Schedule Review Meetings
      c. Preconstruction Conference
      d. Monthly Progress Meetings
      e. Progress Payment Meetings
      f. Optional Submittal Review Meeting
      g. Special Meetings
      h. Safety Meetings

1.2 POST-NOTICE OF AWARD MEETING

A. Owner will call for and administer a Post-Notice of Award Meeting at time and place to be announced.
B. Contractor's general superintendent, Contractor's foreman, preparer of Safety Program, preparer of SWPPP, if applicable, and all major Subcontractors shall attend this meeting.
C. Agenda will include, but not be limited to, discussion of requirements for the following items:
   1. Insurance
   2. Bonds
   3. Notice to Proceed
   4. Commencement of Contract Time
   5. Start of Work at Site
   6. Contractor's Initial and Original Schedule
   7. Contractor's Schedule of Values
   8. Contractor's Schedule of Submittals
   9. Submittal and RFI procedures
   10. Safety Program
   11. SWPPP, if applicable
   12. Permits
   13. Name of Owner's Representative
   14. Other items as appropriate
D. Owner will distribute minutes of Post-Notice of Award Meeting to attendees. Attendees shall have 5 Days to submit comments or additions to minutes. Minutes will constitute final memorialization of results of Post-Notice of Award Meeting.

1.3 SCHEDULE REVIEW MEETINGS

A. Within 30 Days of issuance of Notice to Proceed, meet with Owner and conduct initial review of Contractor's draft Schedule of Submittals, draft Schedule of Values, and Initial Schedule.

B. Authorized representative in Contractor's organization, designated in writing, who will be responsible for working and coordinating with Owner relative to preparation and maintenance of Progress Schedule shall attend the initial schedule review meeting.
C. Contractor shall, within 30 Days from the commencement of Contract Time and prior to commencement of Work at the Site, meet with Owner to review the Original Progress Schedule and construction schedule submittals.
   1. Contractor shall have its manager, superintendent, scheduler, and key Subcontractor representatives, as required by Owner, in attendance. The meeting will take place over a continuous one-Day period.
   2. Owner's review will be limited to submittals' conformance to Contract Documents requirements including, but not limited to, coordination requirements. Owner's review may also include:
      a. Clarifications of Contract Requirements
      b. Directions to include activities and information missing from submittals
      c. Requests to Contractor to clarify its schedule
   3. Within 5 Days of the Schedule Review Meeting, Contractor shall respond in writing to all questions and comments expressed by Owner at the meeting.
D. Owner will administer Schedule Review Meetings and shall distribute minutes of Schedule Review Meetings to attendees. Attendees shall have 5 Days to submit comments or additions to minutes. Minutes will constitute final memorialization of results of Schedule Review Meetings.

1.4 PRECONSTRUCTION CONFERENCE

A. Owner will call for and administer Preconstruction Conference at time and place to be announced.
B. Contractor, and all major Subcontractors attend Preconstruction Conference.
C. Agenda will include, but not be limited to, the following items.
   1. Revised/updated schedules
   2. Personnel and vehicle permit procedures
   3. Use of premises
   4. Location of the Contractor's on-Site facilities
   5. Security
   6. Housekeeping
   7. Inspection and testing procedures, on-Site and off-Site
   8. Utility shutdown procedures
   9. Control and reference point survey procedures
   10. Safety Program
   11. Jurisdictional agency requirements
   12. Other items as appropriate
D. Owner will distribute copies of minutes to attendees. Attendees shall have 7 Days to submit comments or additions to minutes. Minutes will constitute final memorialization of results of Preconstruction Conference.

1.5 MONTHLY PROGRESS MEETINGS

A. Owner will schedule and administer monthly progress meetings throughout duration of Work. Progress meetings will be held monthly on approximately the 20th of each month.
   1. Meetings shall be held at Contractor's on-Site office unless otherwise directed by Owner.
   2. An Owner Representative will prepare agenda and distribute it at the meeting to Contractor.

3. Contractor's general superintendent shall attend these meetings.
4. Owner will record. Approximately 7 Days after meeting, Owner will distribute minutes to Contractor, who will distribute to those affected by decisions made at meeting. Attendees can either submit comments or additions to minutes prior to the next progress meeting, or may attend the next progress meeting and submit comments or additions there. Minutes will constitute final memorialization of results of meeting.

B. These meetings are considered a critical component of overall monthly schedule update submittal and Contractor shall have appropriate personnel attend. Contractor's job superintendent, major Subcontractors and suppliers, Owner, and others as appropriate shall attend progress meetings.

C. Agenda will contain the following items, as appropriate:
1. Review, revise as necessary, and approve previous meeting minutes
2. Review of Work progress since last meeting, including percent complete of each activity
3. Review of the schedule update submittal
   a. Time impact evaluations for Change Orders and Time Extension Request
   b. Actual and anticipated activity sequence changes
   c. Actual and anticipated duration changes
   d. Actual and anticipated Contractor delays
4. Review the Application for Payment
5. Status of Construction Work Schedule, delivery schedules, adjustments
6. Submittal, RFI, and Change Order status
7. Review of the Contractor's safety program activities and results, including report on all serious injury and/or damage accidents
8. Other items affecting progress of Work

1.6 PROGRESS PAYMENT MEETINGS

A. Prior to official application for Payment submission, a meeting will be held on approximately the 20th of each month to review the Application for Payment.
1. At this meeting, the following items will be reviewed:
   a. Percent complete of each activity
   b. Project Schedule
   c. Hard-copy updates of the Project Record Drawings (Field Set)
2. Contractor's general superintendent shall attend these meetings.

1.7 OPTIONAL SUBMITTAL REVIEW MEETING

A. At Owner or Contractor's request, in order to facilitate the timeliness of the review process, Owner may schedule a meeting to review the materials submitted.
1. Request a meeting date with Owner at least 10 Business Days in advance.
2. Provide complete package of Submittals at least 10 Business Days in advance of the meeting.
3. The meeting shall take place at Owner's office. Owner will provide the authorized staff to review Submittals during the meeting.
4. Make available for this meeting the job superintendent and/or foreman, Contractor's safety officer, protective coating manufacturer's representative (if applicable), and someone knowledgeable of all Submittals and authorized to make substitutions or changes.

1.8 SPECIAL MEETINGS

A. Owner or Contractor may call special meetings by notifying all desired participants and Owner 5 Days in advance, giving reason for meeting. Special meetings may be held without advance notice in emergency situations.
B. At any time during the progress of Work, Owner shall have authority to require Contractor to attend meeting of any or all of the Subcontractors engaged in Work or in other work, and notice of such meeting shall be duly observed and complied with by Contractor.
C. Contractor shall schedule and conduct coordination meetings as necessary to discharge coordination responsibilities in Document 00700 (General Conditions). Contractor shall give Owner 5 Days written notice of coordination meetings. Contractor shall maintain minutes of coordination meetings. Attendees shall have 7 Days to submit comments or additions to minutes. Minutes will constitute final memorialization of results of coordination meetings.

1.9 SAFETY MEETINGS

A. Conduct monthly Contractor Safety Committee meetings.
B. Conduct weekly toolbox safety talks.

PART 2 PRODUCTS – NOT USED

PART 3 EXECUTION – NOT USED

END OF SECTION

SECTION 01320

PROGRESS SCHEDULES AND REPORTS

PART 1 GENERAL

1.1 SUMMARY

A. Perform scheduling of Work under this Contract in accordance with requirements of this Section 01320.
   1. Development of schedule, cost, and resource loading of the Progress Schedule, monthly payment requests, and Project status reporting requirements of the Contract Documents shall employ scheduling as required in this Section 01320.
   2. The Schedule shall be cost-loaded based on Schedule of Values as approved by Owner.
   3. Submit schedules and reports as specified in Document 00700 (General Conditions).

B. Upon Award of Contract, immediately commence development of Initial Schedule to ensure compliance with schedule submittal requirements.

C. Contractor's obligations under this Section 01320 are hereby deemed material obligations justifying Owner's remedies for default if Contractor fails to perform. Nothing in this paragraph 1.1.C of this Document 01320 or the lack of an express statement that any other Contract Documents provision is or is not material shall be considered in determining whether any such other provision is material.

D. Employ competent scheduling personnel or a schedule consultant with experience performing scheduling required herein on two prior, similar projects.

1.2 GENERAL

A. Progress Schedule shall be based on and incorporate Milestone and completion dates specified in Contract Documents.

B. Overall time of completion and time of completion for each Milestone shown on Progress Schedule shall adhere to times in Document 00520 (Agreement), unless an earlier (advanced) time of completion is requested by Contractor and agreed to by Owner. A Change Order shall formalize any such agreement.
   1. Owner is not required to accept an earlier (advanced) schedule, i.e., one that shows early completion date(s) for the Contract Time.
   2. Contractor is not entitled to extra compensation in event agreement is reached on an earlier (advanced) schedule and Contractor completes its Work, for whatever reason, beyond completion date shown in earlier (advanced) schedule but within the Contract Time.
   3. A schedule showing the Work completed in less than the Contract Time, which has been accepted by Owner, shall be considered to have Project Float. The Project Float is the time between the scheduled completion of the Work and Contract Substantial Completion. Project Float is a resource available to both Owner and Contractor.
   4. Project Float Ownership: Neither Owner nor Contractor owns Project Float. The Project owns the Project Float. As such, liability for delay of any Substantial Completion date rests with the party whose actions, last in time, actually cause delay to a Substantial Completion date.
      a. For example, in the event of unexcused delay by Party A and Party B, and if Party A uses some, but not all of the Project Float and Party B later uses remainder of the

Project Float as well as additional time beyond the Project Float, Party B shall be liable for the time that represents a delay to the Substantial Completion date.

b. Under this scenario, Party A would not be responsible for the time since it did not consume all of the Project Float and additional Project Float remained; therefore, the Substantial Completion Date was unaffected.

C. Progress Schedule shall be the basis for evaluating job progress, payment requests, and time extension requests. Responsibility for developing Contract schedule and monitoring actual progress as compared to Progress Schedule rests with Contractor.

D. Failure of Progress Schedule to include any element of the Work or any inaccuracy in Progress Schedule will not relieve Contractor from responsibility for accomplishing the Work in accordance with the Contract. Owner's acceptance of Schedule shall be for its use in monitoring and evaluating job progress, payment requests, and time extension requests, and shall not, in any manner, impose a duty of care upon Owner, or act to relieve Contractor of its responsibility for means and methods of construction.

E. Transmit each item using form approved by Owner or following Section 01330 (Submittal Procedures).

1. Identify Project with the Owner Contract number, and name of Contractor.
2. Provide space for Contractor's approval stamp and Owner's review stamps.
3. Submittals received from sources other than Contractor will be returned to Contractor without Owner's review.

1.3 INITIAL AND ORIGINAL PROGRESS SCHEDULE

A. Initial Schedule submitted within 21 Days after issuance of Notice to Proceed for review at the initial Schedule Review Meeting shall serve as Contractor's schedule for up to 30 Days after the commencement of Contract Time.

1. Initial Schedule must indicate detailed plan for the Work to be completed in first 30 Days after commencement of Contract Time of the Contract; details of planned mobilization of plant and equipment; sequence of early operations; and procurement of materials and equipment. Show Work beyond 30 Days in summary form.

B. Contractor shall submit its Original Schedule for review no later than first Application for Payment and prior to commencement of Work at the Site. Original Schedule and all updates shall comply with all standards herein.

C. All Schedules shall be time-scaled.

D. Except as otherwise expressly provided in this Section 01320, meet with Owner to review and discuss each Schedule (i.e., Initial, Original and updates) within seven Days after each Schedule has been submitted to Owner.

1. Owner's review and comment on any Schedule shall be limited to Contract conformance (with sequencing, coordination, and Milestone requirements).
2. Contractor shall make corrections to Schedule necessary to comply with Contract requirements and shall adjust Schedule to incorporate any missing information requested by Owner. Resubmit Initial Schedule if requested by Owner.

E. If Contractor is of the opinion that any of the Work included on its Schedule has been impacted, submit to Owner a written TIE in accordance with paragraph 1.8 of this Section 01320. The TIE shall be based on the most current update of the Schedule.

1.4 SCHEDULE FORMAT AND LEVEL OF DETAIL

A. Each Schedule (Initial, Original, and updates) shall indicate all separate submittals, fabrication, procurement and field construction activities required for completion of the Work, including but not limited to the following:

1. All Contractor, Subcontractor, and assigned Contractor Work shall be shown in a logical Work sequence that demonstrates a coordinated plan of Work for all contractors. The intent is to provide a common basis of acceptance, understanding, and communication, as well as interface with other contractors.
2. Incorporate Schedule of Submittals into each Schedule.
3. Activities related to the delivery of Contractor- and Owner-furnished equipment to be Contractor-installed per Contract shall be shown.
4. All activities shall be identified through codes or other identification to indicate the building (i.e. buildings, Site Work) and Contractor/Subcontractor responsibility to which they pertain.
5. Break up the Work schedule into activities of durations of approximately 21 Days or less each, except for non-field construction activities or as otherwise deemed acceptable by Owner.
6. Show the critical path in red. For each activity, show early start, late start, early finish, late finish, durations measured in Days, Project Float, resources, predecessor and successor activities, planned workday/week for the activity, manpower loading, and scheduled/actual progress payments.

B. Seasonal weather conditions (which do not constitute a delay as defined herein) shall be considered in the planning and scheduling of all Work influenced by high or low ambient temperatures or presence of high moisture for the completion of the Work within the allotted Contract Time.

C. Failure by Contractor to include any element of Work required for performance of the Work on the detailed construction schedule shall not excuse Contractor from completing all Work required within the Contract Time.

D. A two-week "look ahead," detailed daily bar chart schedule shall be updated and issued weekly.

E. Prepare schedule using Microsoft® Office Project 2013 software for all scheduling, including schedule updates.

1.5 MONTHLY SCHEDULE UPDATE SUBMITTALS

A. Following acceptance of Contractor's Initial Schedule, monitor progress of Work and adjust Schedule each month to reflect actual progress and any anticipated changes to planned activities.
   1. Each Schedule update submitted shall be complete, including all information requested for the Initial Schedule and Original Schedule submittal.
   2. Each update shall continue to show all Work activities including those already completed. Completed activities (shown in blue) shall accurately reflect "as built" information by indicating when activities were actually started and completed, and Contractor warrants the accuracy of as-built information as shown.

B. A meeting will be held in accordance with Section 01315 (Project Meetings) to review the Schedule update submittal. Submit Schedule updates monthly, 7 Days prior to the Monthly Progress Meeting.

C. Within five Days after monthly Schedule update meeting, submit the updated Schedule.

D. Within five Days of receipt of above-noted revised submittals, Owner will either accept or reject monthly schedule update submittal.
   1. If accepted, percent complete shown in monthly update will be basis for Application for Payment by Contractor. The schedule update shall be submitted as part of Contractor's Application for Payment.

2. If rejected, update shall be corrected and resubmitted by Contractor before the Application for Payment is submitted.

E. Updating, changing or revising of any report, curve, schedule or narrative submitted to Owner by Contractor under this Contract, nor Owner's review or acceptance of any such report, curve, schedule or narrative shall not have the effect of amending or modifying, in any way, the Contract Substantial Completion date or Milestone dates or of modifying or limiting, in any way, Contractor's obligations under this Contract.

1.6 SCHEDULE REVISIONS

A. Updating the Schedule (Initial and Original) to reflect actual progress shall not be considered revisions to the Schedule. Since scheduling is a dynamic process, however, revisions to activity durations and sequences are expected on a monthly basis.

B. To reflect revisions to the Schedule, provide Owner with a written narrative with a full description and reasons for each Work activity revised. For revisions affecting the sequence of Work, provide a schedule diagram that compares the original sequence to the revised sequence of Work. Provide the written narrative and schedule diagram for revisions three Days in advance of the monthly schedule update meeting. Clearly show and discuss any changes in the critical path.

C. Schedule revisions shall not be incorporated into any schedule update until Owner has reviewed the revisions. Owner may request further information and justification for schedule revisions and, within three Days, provide Owner with a complete written narrative response to Owner's request.

D. If Owner does not accept Contractor's revision, and Contractor disagrees with Owner's position, Contractor has seven Days from receipt of Owner's letter rejecting the revision, to provide a written narrative providing full justification and explanation for the revision. Contractor's failure to respond in writing within seven Days of Owner's written rejection of a schedule revision shall be contractually interpreted as acceptance of Owner's position, and Contractor waives its rights to subsequently dispute or file a claim regarding Owner's position. If Contractor files a timely response as provided in this paragraph, and the parties are still unable to agree, Contractor's sole right shall be to file a claim as provided in Document 00700 (General Conditions), Article 12.

E. At Owner's discretion, Contractor can be required to provide Subcontractor certifications of performance regarding proposed schedule revisions affecting said Subcontractors.

1.7 RECOVERY SCHEDULE

A. If a Schedule update shows a Substantial Completion date 21 Days beyond any Contract Substantial Completion date, or individual Milestone completion dates, submit to Owner within seven Days the proposed revisions to recover the lost time. As part of this submittal, provide a written narrative for each revision made to recapture the lost time. If the revisions include sequence changes, provide a schedule diagram comparing the original sequence to the revised sequence of Work. If Owner reasonably requests, show the intended critical path; secure appropriate Subcontractor and supplier consent to the recovery Schedule; submit a narrative explaining trade flow and construction flow changes, duration changes, added/deleted activities, critical path changes and identify all near critical paths and man-hour loading assumptions for major Subcontractors.

B. The revisions shall not be incorporated into any Schedule update until Owner has reviewed the revisions.

C. If Owner does not accept Contractor's revisions, Owner and Contractor shall follow the procedures in paragraphs 1.6C, 1.6D, and 1.6E of this Section 01320.

D. At Owner's discretion, Contractor can be required to provide Subcontractor certifications for revisions affecting said Subcontractors.

1.8 TIME IMPACT EVALUATION (TIE) FOR CHANGE ORDERS AND OTHER DELAYS

A. When Contractor is directed to proceed with changed Work, prepare and submit, within 14 Days from the direction to proceed, a TIE that includes both a written narrative and a schedule diagram depicting how the changed Work affects other schedule activities. The schedule diagram shall show how Contractor proposes to incorporate the changed Work in the schedule, and how it impacts the current Schedule update critical path or otherwise. Contractor is also responsible for requesting time extensions based on the TIE's impact on the critical path. The diagram shall be tied to the main sequence of scheduled activities to enable Owner to evaluate the impact of changed Work to the scheduled critical path.
B. Comply with the requirements of paragraph 1.8A of this Section 01320 for all types of delays such as, but not limited to, Contractor/Subcontractor delays, adverse weather delays, strikes, procurement delays, fabrication delays, etc.
C. Contractor is responsible for all costs associated with the preparation of TIEs, and the process of incorporating TIEs into the current schedule update.
D. Once agreement has been reached on a TIE, the Contract Time will be adjusted accordingly. If agreement is not reached on a TIE, the Contract Time may be extended in an amount Owner allows, and Contractor may submit a claim for additional time claimed by Contractor as provided in Document 00700 (General Conditions).

1.9 TIME EXTENSIONS

A. Contractor is responsible for requesting time extensions for time impacts that, in the opinion of Contractor, impact the critical path of the current schedule update. Notice of time impacts shall be given in accordance with Document 00700 (General Conditions).
B. Where an event for which Owner is responsible impacts the projected Substantial Completion date, provide a written mitigation plan, including a schedule diagram, which explains how (e.g., increase crew size, overtime, etc.) the impact can be mitigated. Also include a detailed cost breakdown of the labor, equipment, and material Contractor would expend to mitigate Owner-caused time impact. Submit mitigation plan to Owner within 14 Days from the date of discovery of said impact. Contractor is responsible for the cost to prepare the mitigation plan.
C. Failure to request time, provide TIE, or provide the required mitigation plan will result in Contractor waiving its right to a time extension and cost to mitigate the delay.
D. No time will be granted under the Contract Documents for cumulative effect of changes.
E. Owner will not be obligated to consider any time extension request unless requirements of Contract Documents are complied with.
F. Failure of Contractor to perform in accordance with the current schedule update shall not be excused by submittal of time extension requests.
G. Notwithstanding any other provision of this Section 01320, if Contractor does not submit a TIE within the required 14 Days for any issue, Contractor hereby agrees that Contractor does not require a time extension for that issue.

1.10 PROJECT STATUS REPORTING

A. In addition to submittal requirements for scheduling identified in this Section 01320, provide a monthly Project status report (i.e., written narrative report) to be submitted in conjunction with each Schedule as specified herein. Status reporting shall be in form specified in this paragraph 1.10 below.

B. Prepare monthly written narrative reports of status of Project for submission to Owner. Written status reports shall include:
   1. Status of major Project components (percent complete, amount of time ahead or behind schedule) and an explanation of how Project will be brought back on schedule if delays have occurred.
   2. Progress made on critical activities indicated on each Schedule, including inspections.
   3. Explanations for any lack of Work on critical path activities planned to be performed during last month.
   4. Explanations for any schedule changes, including changes to logic or to activity durations.
   5. List of critical activities scheduled to be performed during the next month.
   6. Status of major material and equipment procurement.
   7. Any delays encountered during reporting period.
   8. Description or list of any required permit reports prepared or submitted.
   9. Provide printed report indicating actual versus planned resource loading for each trade and each activity. This report shall be provided on weekly and monthly basis.
      a. Actual resource shall be accumulated in field by Contractor, and shall be as noted on Contractor's daily reports. These reports will be basis for information provided in monthly and weekly printed reports.
      b. Explain all variances and mitigation measures.
   10. Contractor may include any other information pertinent to status of Project. Include additional status information requested by Owner at no additional cost.
   11. Status reports, and the information contained therein, shall not be construed as claims, notice of claims, notice of delay, or requests for changes or compensation.

PART 2 PRODUCTS – NOT USED

PART 3 EXECUTION – NOT USED

END OF SECTION

SECTION 01330

SUBMITTAL PROCEDURES

PART 1 GENERAL

1.1 SUMMARY

A. Section Includes:
   1. Description of general requirements for Submittals for the Work, as applicable:
      a. Procedures
      b. Schedule of Submittals
      c. Construction Material Waste Management Plan
      d. Safety Program
      e. Progress Schedule
      f. Product Data
      g. Shop Drawings
      h. Samples
      i. Coordination Drawings (If Applicable)
      j. Quality Assurance/Control Submittals
         1) Design Data
         2) Test Reports
         3) Certificates
         4) Manufacturers' Instructions
         5) Work Plans
      k. Installation, Operation, and Maintenance Manual (If Applicable)
      l. Project Record Documents
      m. Storm Water Pollution Prevention Program
      n. Delay of Submittals

1.2 PROCEDURES

A. Submit at Contractor's expense the Submittals required by the Contract Documents.
B. Submit Submittals to Owner in accordance with accepted Schedule of Submittals. If no such schedule is agreed upon, then all Submittals shall be submitted within 35 Days from the commencement of Contract Time.
C. Transmit each item with the appropriate Submittal transmittal form (included at the end of this Section 01330). Where manufacturer's standard drawings or data sheets are used, they shall be marked clearly to show those portions of the data that are applicable to this Project. Inapplicable portions shall be marked out. Organize Submittals by Specification Section. Submittals containing information about more than one Specification Section will be returned for resubmittal. Submittals shall include all information requested by each Specification Section. Incomplete Submittals will be returned not reviewed by Owner.
D. The data shown on the Submittals shall be complete with respect to quantities, dimensions, specified performance and design criteria, materials, and similar data to show Owner the materials and equipment Contractor proposes to provide and to enable Owner to review the information for the limited purposes specified in this Section 01330. Submittals shall be identified clearly as to material, supplier, pertinent data such as catalog numbers and the use for which it is intended and otherwise as Owner may require to enable Owner to review the Submittal.

E. At the time of each submission, give Owner specific written notice of all variations, if any, that the Submittal may have from the requirements of the Contract Documents, and the reasons therefore. This written notice shall be in a written communication attached to the Submittal transmittal form. In addition, cause a specific notation to be made on each Submittal submitted to Owner for review and approval of each such variation. If Owner accepts deviation, Owner will note its acceptance on the returned Submittal transmittal form and, if necessary, issue appropriate Contract Modification.

F. Submittal coordination and verification is the responsibility of Contractor; this responsibility shall not be delegated in whole or in part to Subcontractors or suppliers. Before submitting each Submittal, review and coordinate each Submittal with other Submittals and with the requirements of the Work and the Contract Documents, and determine and verify:
   1. All field measurements, quantities, dimensions, specified performance criteria, installation requirements, materials, catalog numbers, and similar information with respect thereto;
   2. All materials with respect to intended use, fabrication, shipping, handling, storage, assembly, and installation pertaining to the performance of the Work; and
   3. All information relative to Contractor's sole responsibility for means, methods, techniques, sequences, and procedures of construction and safety precautions and programs incident thereto.

G. Contractor's submission to Owner of a Submittal shall constitute Contractor's representation that it has satisfied its obligations under the Contract Documents, and as set forth immediately above in this paragraph 1.2 of this Section 01330, with respect to Contractor's review and approval of that Submittal.

H. Designation of Work "by others," if shown in Submittals, shall mean that Work will be responsibility of Contractor rather than Subcontractor or supplier who has prepared Submittals.

I. After review by Owner of each Submittal, an electronic copy of each Submittal will be returned to Contractor with actions defined as follows:
   1. NO EXCEPTIONS TAKEN - Accepted subject to its compatibility with future Submittals and additional partial Submittals for portions of the Work not covered in this Submittal. Does not constitute approval or deletion of specified or required items not shown on the Submittal.
   2. MAKE CORRECTIONS NOTED (NO RESUBMISSIONS REQUIRED) - Same as item 1 above, except that minor corrections as noted shall be made by Contractor.
   3. REVISE AS NOTED AND RESUBMIT - Rejected because of major inconsistencies or errors that shall be resolved or corrected by Contractor prior to subsequent review by Owner.
   4. REJECTED - RESUBMIT - Submitted material does not conform to Drawings and/or Specifications in major respect, i.e.: wrong size, model, capacity, or material.

J. Make a complete and acceptable Submittal at least by second submission. Owner reserves the right to deduct monies from payments due Contractor to cover additional costs of review beyond the second submission per paragraph 1.2T. Illegible Submittals will be rejected and returned to Contractor for resubmission. Contractor shall be in breach of the Contract if Contractor's first resubmittal, following a Submittal which Owner determines falls within categories 3 or 4 above, does not fall within categories 1 or 2 above.

K. Favorable review will not constitute acceptance by Owner of any responsibility for the accuracy, coordination, or completeness of the Submittals. Accuracy, coordination, and

completeness of Submittals shall be sole responsibility of Contractor, including responsibility to back-check comments, corrections, and modifications from Owner's review before fabrication. Contractor, Subcontractors, or suppliers may prepare Submittals, but Contractor shall ascertain that Submittals meet requirements of Contract Documents, while conforming to structural space and access conditions at point of installation. Owner's review will be only to assess if the items covered by the Submittals will, after installation or incorporation in the Work, conform to the information given in the Contract Documents and be compatible with the design concept of the completed Project as indicated by the Contract Documents. Favorable review of Submittal, method of Work, or information regarding materials and equipment Contractor proposes to furnish shall not relieve Contractor of responsibility for errors therein and shall not be regarded as assumption of risks or liability by Owner, or any officer or employee thereof, and Contractor shall have no claim under Contract Documents on account of failure or partial failure or inefficiency or insufficiency of any plan or method of Work or material and equipment so accepted. Favorable review shall be considered to mean merely that Owner has no objection to Contractor using, upon Contractor's own full responsibility, plan or method of Work proposed, or furnishing materials and equipment proposed.

L. Unless otherwise specified, Owner's review will not extend to the means, methods, techniques, sequences, or procedures of construction or to safety precautions or programs incident thereto. The review and approval of a separate item as such will not indicate approval of the assembly in which the item functions.

M. Submit complete initial Submittal for those items where required by individual Specification Sections. Complete Submittal shall contain sufficient data to demonstrate that items comply with Specifications, shall meet minimum requirements for submissions cited in Specification Sections, shall include motor data and seismic anchorage certifications, where required, and shall include necessary revisions required for equipment other than first named. If Contractor submits incomplete initial Submittal when complete Submittal is required, Submittal may be returned to Contractor without review.

N. Copy, conform, and distribute reviewed Submittals in sufficient numbers for Contractor's files, Subcontractors, and vendors.

O. After Owner's review of Submittal, revise as noted and resubmit as required. Identify changes made since previous Submittal.
   1. Begin no fabrication or Work that requires Submittals until return of Submittals not requiring resubmittal. Do not extrapolate from Submittals covering similar Work.
   2. Normally, Submittals will be processed and returned to Contractor within 30 Days of receipt.

P. Distribute reviewed Submittals to concerned persons. Instruct recipients to promptly report any inability to comply with provisions.

Q. All Submittals shall be number-identified by Contractor, prior to submission to Owner, in accordance with Owner's numbering format. Owner will provide Contractor with sample numbering format.

R. Submission Requirements:
   1. Deliver Submittals to Owner at least 30 Days before dates reviewed Submittals will be needed.
   2. Initial Submittal of Installation, Operation, and Maintenance Manual shall be:
      a. 45 Days after the date Submittal(s) that pertain to the item are favorably reviewed; and
      b. Prior to start-up and testing of the applicable product or equipment.

3. The following table lists the number of initial Submittals required from Contractor for each type of submission and to whom Contractor shall distribute the information. Submittals requiring resubmission will require the same quantity and distribution as an initial Submittal.

Submittal	**Contractor Submittal**	
	# of hard copies/ Prints/ Samples	Electronic copy
Items Go To →	Owner	Owner
Schedule of Submittals	0	✓
Construction Material Waste Management Plan	0	✓
Monthly Progress Reports for Construction Material Waste Management Plan	0	✓
Safety Program	1	✓
Fire Protection Plan	1	✓
Progress Schedule	0	✓
Product Data	0	✓
MSDSs	0	✓
Shop Drawings	0	✓
Drawings or any documents larger than 11″ x 17″	0	✓
Samples	2	-
Coordination Drawings	0	✓
Quality Assurance/Control Submittals:		
Design Data	0	✓
Test Reports	0	✓
Certificates	0	✓
Manufacturers' Instructions	0	✓
Work Plans	0	✓
Installation, Operation, and Maintenance Manuals (initial submittal)	1	✓
Installation, Operation, and Maintenance Manuals (final submittal)	3	✓
Major Products List	0	✓
Storm Water Pollution Prevention Program	0	✓
Other Documents	0	✓

4. The following table lists the Submittals required from Contractor after Owner's favorable review, if Submittal requires a stamp or signature.

Submittal	Contractor Submittal
	# of hard copies
Items Go To →	Owner
Shop Drawings	1
Coordination Drawings	1
Quality Assurance/Control Submittals:	
Design Data	1
Test Reports	1
Certificates	1
Work Plans	1
Storm Water Pollution Prevention Program	1
Other Documents	1

5. Accompany each copy of the Submittal(s) with a Submittal transmittal form, containing:
   a. Date, revision date, and Submittal identification number.
   b. Project name and Owner's Contract number.
   c. Contractor's name, address, and job number.
   d. Specification Section number clearly identified.
   e. The quantity of Shop Drawings, Product Data, or Samples submitted.
   f. Notification of deviations from Contract Documents.
   g. MSDS for each item complying with OSHA's Hazard Communication Standard 29 CFR 1910.1200.
   h. Other pertinent data.
6. Submittal shall include:
   a. Date and revision dates.
   b. Revisions, if any, identified.
   c. Project Name and Contract number.
   d. The names of:
      1) Contractor, Subcontractor, Supplier, Manufacturer, and separate detailer, when pertinent.
   e. Identification of product material by location within the Project.
   f. Relation to adjacent structure or materials.
   g. Field dimensions, clearly identified as such.
   h. Specification Section number and applicable detail reference number and Drawing number.
   i. Applicable reference standards, such as ASTM, ANSI, FS, NEMA, SMACNA or ACI.
   j. A blank space, on the first sheet of each Submittal set, 5" x 4" for the Owner's stamp.
   k. Identification of deviations from Contract Documents.

S. Resubmission requirements:
1. Shop Drawings:
   a. Revise initial Shop Drawings as required and resubmit as specified for initial Submittals.
   b. Indicate on Shop Drawings any changes that have been made other than those requested by Owner.
2. Product Data and Samples:
   a. Submit new Product Data and Samples as required for initial Submittals.

3. Installation, Operation, and Maintenance Manual:
   a. Revise initial Installation, Operation, and Maintenance Manual(s) as required and resubmit as specified for initial Submittals.

T. Charge for resubmissions:
   1. One re-examination of Contractor's Submittals that have been returned for correction or replacement will be included in Owner's budget. Any additional re-examination of Contractor's Submittals will be considered additional scope services to be paid by Contractor through Owner. Contractor shall pay Owner (or Owner may deduct from any progress or final payment), for engineering personnel, on an hourly basis at 2.5 times direct payroll expenses, and for consultant personnel time at 1.25 times the amount billed Owner.

1.3 SCHEDULE OF SUBMITTALS

A. Submit a preliminary Schedule of Submittals as required herein and by Document 00700 (General Conditions). Utilize Owner's Submittal Log form to prepare Schedule of Submittals. Owner's Submittal Log form will be provided to Contractor in electronic media format compatible with Microsoft® Excel 2013.

B. Schedule of Submittals will be used by Owner to schedule its activities relating to review of Submittals. Schedule of Submittals shall indicate a spreading out of Submittals and early Submittals of long-lead-time items and of items that require extensive review.

C. Schedule of Submittals will be reviewed by Owner and shall be revised and resubmitted until accepted by Owner.

D. Unless otherwise specified, transmit Submittals for associated items simultaneously to ensure that information is available for checking each item when it is received. Identify on the Submittal transmittal form that such Submittals should be reviewed together.

1.4 CONSTRUCTION MATERIAL WASTE MANAGEMENT PLAN

A. Submit Construction Material Waste Management Plan specific to these Contract Documents as required by Section 01741 (Construction Material Waste Management Plan).

1.5 SAFETY PROGRAM

A. Submit Safety Program specific to these Contract Documents as required by Section 01540 (Site Security and Safety).

1.6 PROGRESS SCHEDULE

A. See Section 01320 (Progress Schedules and Reports) for schedule and report requirements. Section 01320 (Progress Schedules and Reports) shall control in any conflict with this Section 01330.

B. Progress schedules, schedule updates, and reports shall be submitted using software described Section 01320 (Progress Schedules and Reports). Electronic files shall be complete copies, including all programs and electronic coding.

1.7 PRODUCT DATA

A. Within ten Days after Contract Time commences to run, submit complete list of major products proposed for use (included at the end of this Section 01330, if required), with name of manufacturer, telephone number, trade name, and model number of each product. Tabulate data by Specification Section.

B. Product or Catalog Data:

1. Manufacturers' standard drawings shall be modified to delete non-applicable data or include applicable data.
2. Manufacturers' catalog sheets, brochures, diagrams, schedules, charts, illustrations, and other standard descriptive data:
   a. Mark each copy to identify pertinent materials, products, or models.
   b. Show dimensions and clearances required, performance characteristics and capacities, wiring diagrams and controls.
3. For products specified only by reference standards, give manufacturer, trade name, model or catalog designation, and reference standards.
4. Material Safety Data Sheets:
   a. In addition to MSDSs otherwise required by the Contract Documents, submit MSDSs for any products containing a hazardous substance such as paints, solvents, thinners, varnish, lacquer, glues and adhesives, mastics, sealants, equipment fuel, equipment lubricant, or other materials needed for the Project as required by the individual Specification Sections or as otherwise specified in the Contract Documents.
   b. MSDSs must be submitted with Product Data Submittal in order for the Submittal to be reviewed.

C. Supplemental Data:
1. Mark each copy to identify applicable products, models, options, and other data. Supplement manufacturer's standard data to provide information unique to Project.

1.8 SHOP DRAWINGS

A. Minimum Sheet Size: 8½ inches by 11 inches. All others: Multiples of 8½ inches by 11 inches, 34 inches by 44 inches maximum.
B. The electronic copy will be marked with Owner's review comments and returned to Contractor.
C. Mark each copy to identify applicable products, models, options, and other data; supplement manufacturers' standard data to provide information unique to Work.
D. Include manufacturers' installation instructions when required by Specification Section.
E. If Contractor submits Shop Drawings for items that Shop Drawings are not specified, Owner will not be obliged to review them.
F. Contractor is responsible for procuring copies of Shop Drawings for its own use as it may require for the progress of the Work.
G. Shop Drawings shall be drawn to scale and completely dimensioned, showing plan view together with such sectional views as are necessary to clearly show construction detail, materials, and methods.

1.9 SAMPLES

A. Submit full range of manufacturers' standard colors, textures, and patterns for Owner's selection.
B. Submit Samples to illustrate functional and aesthetic characteristics of product, with integral parts and attachment devices. Coordinate Submittal of different categories for interfacing Work.
C. Include identification on each Sample, giving full information.
D. Sizes: Unless otherwise specified, provide the following:
1. Paint Chips: Manufacturers' standard
2. Flat or Sheet Products: Minimum 6 inches square, maximum 12 inches square
3. Linear Products: Minimum 6 inches, maximum 12 inches long
4. Bulk Products: Minimum 1 pint, maximum 1 gallon

E. Full size Samples may be used in Work upon approval by Owner.
F. Field Samples and Mock-ups (if applicable):
   1. Erect field Samples and mock-ups at Site in accordance with requirements of Specification Sections. If testing is conducted, record and certify results and full Contract compliance.
   2. Modify or make additional field Samples and mock-ups as required to provide appearance and finishes approved by Owner.
   3. Approved field Samples and mock-ups may be used in Work upon approval by Owner.
   4. Construct or prepare as many additional Samples as may be required, as directed by the Owner, until desired textures, finishes, and/or colors are obtained.
   5. Accepted Samples and mock-up shall serve as the standard of quality for the various units of Work.
G. No review of a Sample shall be taken in itself to change or modify the requirements in the Contract Documents.
H. Finishes, materials, and workmanship in the completed Work shall match accepted Samples.
I. Samples will not be returned to Contractor.

1.10 COORDINATION DRAWINGS (IF APPLICABLE)

A. Layout Drawings: As soon as practical and in no case starting later than 30 Days after issuance of Notice to Proceed, Contractor shall prepare layout drawings of all equipment and piping at not less than ¼" scale. The layout drawings shall show the location of all equipment as well as locations of all valves, piping, fittings, and other items requiring access for service and maintenance. The layout drawings shall also show beams, ceiling heights, walls, floor-to-floor dimensions, columns, doors and other major architectural and structural drawings.
   1. At Contractor's option, the layout drawings may be produced using computer-aided drafting.
B. Coordination with Subcontractors: Within 30 Days after the date of the Notice to Proceed, send one reproducible and two prints of the layout drawings to Subcontractors who shall then make on the reproducible their own routings, etc., as required to determine interrelationship and possible interferences with mechanical equipment, piping and architectural or structural features. The marked-up reproducibles shall then be returned to Contractor no less than 30 Days after receipt by the Subcontractors.
C. Composite Drawings: Contractor shall prepare preliminary composite drawings of such layout drawings, incorporating all the information and routings provided by the Subcontractors. (At Contractor's option, a group of transparent overlays may be substituted, provided that they clearly show the relationship of all proposed installations and they are pin-registered/aligned.)
   1. The preliminary composite drawings or the overlays shall be reviewed during a series of meetings called by Contractor and attended by Owner, at which all Subcontractors and trades shall be represented in order to review and resolve any real or apparent interferences or conflicts.
D. Agreement by Subcontractors: After all conflicts or interferences are resolved, Contractor shall develop a final set of composite drawings showing the agreed-upon routing, layout and juxtaposition of all , piping, major conduit, valves, panels, controls, lighting fixtures and all major mechanical and electrical installations. In areas where no mechanical and electrical installations are installed, each Subcontractor shall be responsible for its own Work and pay

its own costs in connection therewith. In preparation of all the final composite drawings, large scale details as well as cross and longitudinal sections shall be prepared as required to fully delineate all conditions. Particular attention shall be given to the locations, size, and clearance dimensions of equipment items, shafts, and similar features. These final composite drawings shall then be signed off by Subcontractors and Contractor, indicating their awareness of and agreement with the indicated routings and layouts and their interrelationship with the adjoining or contiguous Work. Thereafter, no unauthorized deviations will be permitted and, if made without knowledge or agreement of Owner, such unauthorized Work will be subject to removal and correction at no additional cost to Owner.

E. Minor Changes: In preparing the composite drawings, minor changes in duct, pipe or conduit routings that do not affect the intended function may be made as required to avoid space conflicts, when mutually agreed, but items may not be resized or exposed items relocated without Owner's written approval. No changes shall be made in any wall or chase locations, ceiling heights, door swings or locations, window or other openings or other features affecting the function or aesthetic effect of the building. If conflicts or interferences cannot be satisfactorily resolved, Owner shall be notified and Owner's decision obtained.

F. Distribution of Composite Drawings: After the final composite drawings have been agreed upon and signed by all Subcontractors, provide and distribute four prints and one electronic copy to each of the Subcontractors for reference and record purposes. Make similar distribution of all supplementary composite drawings, initiated by other Subcontractors. Also provide final composite drawings to Owner. All Subcontractors desiring additional prints of such drawings, beyond the basic distribution indicated above in this paragraph 1.10F, shall arrange for and pay the cost of same.

G. Record Composite Drawings: The record copies of the final composite drawings shall be retained by Owner, Contractor, and each Subcontractor as a working reference. All Shop Drawings, prior to their Submittal to Owner, shall be compared with the composite drawings and developed accordingly by Contractor and the responsible Subcontractor. Any revisions to the composite drawings that may become necessary during the progress of the Work shall be noted by Contractor and all Subcontractors and shall be neatly and accurately recorded on the record copies. Contractor and each Subcontractor shall be responsible for the up-to-date maintenance of Subcontractor record copies of the composite drawings and for keeping two copies available at the Site. Contractor and each Subcontractor shall utilize the composite drawings, and any subsequent changes thereto, in the development of Subcontractor "Project Record Documents" drawings.

H. Timely Submission: The composite drawings need not be submitted as a whole, but shall be submitted in all cases in ample time to avoid construction delay. The coordination drawings may lack complete data in certain instances pending receipt of Shop Drawings, but sufficient space shall be allotted for the items affected. When final information is received, such data shall be promptly inserted on the composite drawings.

I. Improperly Coordinated Work: No extra compensation will be paid for relocating any duct, pipe, conduit, or other material that has been installed without proper coordination between Contractor and all Subcontractors involved. If any improperly coordinated Work or Work installed that is not in accordance with the approved composite drawings, necessitates additional Work by Contractor or other Subcontractors, the costs of all such Work shall be borne solely by Contractor or the Subcontractor responsible for the Work.

J. Incorporation of Changes: All changes in the scope of Work due to revisions formally issued and approved shall be shown on the composite drawings.
K. Quality Draftsmanship: All Work on Shop Drawings, layout drawings, coordination drawings, and composite drawings shall be performed by competent drafters and shall be clear and fully legible. Owner shall be the sole judge of the acceptability of the drawings.
L. Structural Cutting: Obtain specific positive written instructions from Owner before cutting beams or other structural members, walls, arches, or lintel, and comply with such instructions.

1.11 QUALITY ASSURANCE/CONTROL SUBMITTALS

A. Design Data:
   1. Indicate that material or product conforms to or exceeds specified requirements.
B. Test Reports:
   1. Indicate that material or product conforms to or exceeds specified requirements.
   2. Reports may be from recent or previous tests on material or product, but shall be acceptable to Owner. Comply with requirements of each individual Specification Section.
C. Certificates:
   1. Indicate that material or product conforms to or exceeds specified requirements.
   2. Submit supporting reference data, affidavits, and certifications as appropriate.
   3. Certificates may be recent or from previous test results on material or product, but shall be acceptable to Owner.
D. Manufacturers' Instructions:
   1. Include manufacturers' printed instructions for delivery, storage, assembly, installation, startup, adjusting, and finishing.
   2. Identify conflicts between manufacturers' instructions and Contract Documents.
E. Work Plans:
   1. Submit work plans with sufficient detail to clearly indicate compliance with Specification requirements and to clearly describe by what means and methods Contractor intends to execute the subject Work.

1.12 INSTALLATION, OPERATION, AND MAINTENANCE MANUAL (IF APPLICABLE)

A. Sheet Size: 8½ x 11 inch
B. Drawing Size: Reduce drawings or diagrams to an 8½ x 11 inch or 11 x 17 inch size. However, where reduction is not practical to ensure readability, fold larger drawings separately and place in vinyl envelopes bound into the binder. Identify vinyl envelopes with drawing numbers.
C. Binding: Bind in heavy-duty white vinyl D-ring binders (locking rings), not more than 3" thick, with standard three-hole punch, two inside pockets, and a clear overlay (front pocket). Binder shall be no more than 80% full.
D. Multiple Items: Multiple items may be combined into one binder; tab each section with plastic-coated dividers.
E. Volumes: create volumes, numbered sequentially, as appropriate.
F. Page Protectors: Provide plastic sheet lifters prior to first page and following last page.
G. Binder title: Include the following title on front and spine of binder(s):

404 AVIATION BOULEVARD ROOF Replacement
INSTALLATION, OPERATION, AND MAINTENANCE MANUAL, [YEAR]
VOLUME [__(number) of __(total number of volumes)]

H. Contents:
   1. Introductory Information:
      a. Title page providing the same information as paragraph 1.12G above
      b. Contractor's name, address, and telephone number
      c. Table of Contents: include a complete table of contents in each volume, if applicable
   2. Include, at a minimum, the following detailed information for each item as applicable and as required by individual Specification Sections:
      a. Bill of materials: include manufacturer, complete model number, quantity, and equipment location.
      b. Operational information:
         1) Equipment function, normal operating characteristics, limiting operations.
         2) Operating instructions for startup, routine and normal operation, regulation and control, shutdown, and emergency conditions.
         3) A list of recommended spare parts with a price list, predicted life of parts subject to wear, and a list of spare parts provided under this Contract.
         4) Instrumentation or tag numbers relating the equipment back to the Contract Documents.
      c. Maintenance information:
         1) Assembly, disassembly, installation, alignment, adjustment, and checking instructions.
         2) Lubrication and maintenance instructions including specific type and amount of lubricant and recommended lubrication interval.
         3) Outline, cross-section, and assembly drawings; engineering data; and electrical diagrams, including elementary diagrams, labeled wiring diagrams, connection diagrams, word description of wiring diagrams and interconnection diagrams.
         4) Test data and performance curves.
         5) Parts lists or other documents packed with equipment when delivered.
         6) Instrumentation or tag numbers relating the equipment back to the Contract Documents.
      d. Troubleshooting guide.
      e. Delete information that is not pertinent to the Project.
   3. Index: alphabetical by keyword

I. Final Submittal: Upon favorable review of Installation, Operation, and Maintenance Manual(s) by Owner, deliver the final approved Installation, Operation, and Maintenance Manual(s). Electronic media format copy shall be searchable and include all tables, charts, drawings, codes and all other matters reflected in hard copies.

1.13 PROJECT RECORD DOCUMENTS

A. Submit Project Record Documents as required by Section 01780 (Project Record Documents).

1.14 STORM WATER POLLUTION PREVENTION PROGRAM (IF APPLICABLE)

A. Submit Storm Water Pollution Prevention Program if required by Section 01500 (Temporary Facilities and Controls).

1.15 DELAY OF SUBMITTALS

A. Delay of Submittals by Contractor is considered avoidable delay. Liquidated damages incurred because of late Submittals will be assessed to Contractor.

PART 2 PRODUCTS – NOT USED

PART 3 EXECUTION – NOT USED

END OF SECTION

MAJOR PRODUCTS LIST, TRANSMITTAL FORMS, AND MAINTENANCE SUMMARY FORM FOLLOW THIS PAGE

MAJOR PRODUCTS LIST

	Specification Section Number	Product	Name of Manufacturer, Trade Name, Model Number	Telephone number
1.	07540	Roof membrane		
2.	07650	Parapet coping		

SUBMITTAL, TRANSMITTAL NO. _____

Project Name: **404 Aviation Boulevard Roof Replacement**	Date Received:
Owner: **Sonoma County Water Agency** **Attention: Construction Management Section** **404 Aviation Boulevard** **Santa Rosa, CA 95403-9019**	Checked By:
Contractor: Address: Attention:	Log Page: Specification Section Number: 1st Submittal ☐ Resubmittal ☐

By Date

Contractor's signature above shall constitute Contractor's representation that it has satisfied its obligations under the Contract Documents with respect to Contractor's review and approval of Submittals.

Date Transmitted:	Previous Transmittal Date:

No. Copies	Description	Manufacturer	Dwg. or Data No.	Action Taken*

Remarks:

* The action designated above is in accordance with the following legend:

A – No Exceptions Taken
B – Make Corrections Noted (No Resubmission Required)
C – Revise as Noted and Resubmit
D – Rejected - Resubmit
1. Not enough information for review
2. No reproducibles submitted
3. Copies illegible
4. Not enough copies submitted
5. Wrong sequence number
6. Wrong resubmittal number
7. Wrong Specification section number
8. Wrong form used
9. See comments

Comments:

By Date

INSTALLATION, OPERATION, AND MAINTENANCE MANUAL, TRANSMITTAL NO. _____

Project Name: 404 Aviation Boulevard Roof Replacement		Date Received:	
Owner: Sonoma County Water Agency 404 Aviation Boulevard Santa Rosa, CA 95403-9019		Attention: Construction Management Section	
Contractor: Address: Attention:		Log Page: Specification Section Number:	
		1st Submittal ☐	Resubmittal ☐

By Date

Contractor's signature above shall constitute Contractor's representation that it has satisfied its obligations under the Contract Documents with respect to Contractor's review and approval of Submittals.

Date Transmitted:	Previous Transmittal Date:

No. Copies	Description	Manufacturer	Dwg. or Data No.	Action Taken*

Remarks:

* The action designated above is in accordance with the following legend:

A – No Exceptions Taken
B – Make Corrections Noted (No Resubmission Required)
C – Revise as Noted and Resubmit
D – Rejected - Resubmit– this manual Submittal is deficient in the following area:

1. Equipment record sheets
2. Functional description
3. Assembly, disassembly, installation, alignment, adjustment, and checkout instructions
4. Operating instructions

D – (continued)

5. Lubrication and maintenance instructions
6. Troubleshooting guide
7. Parts list and ordering instructions
8. Organization (indexing and tabbing)
9. Wiring diagrams and schematics specific to installation
10. Outline, cross section, and assembly diagrams
11. Test data and performance curves
12. Tag or equipment identification numbers
13. See comments

Comments:

By Date

SECTION 01410

REGULATORY REQUIREMENTS

PART 1 GENERAL

1.1 SUMMARY

A. Section includes: regulatory requirements that may be applicable to Contract Documents.
B. Specific reference in the Specifications to codes and regulations or requirements of regulatory agencies shall mean the latest printed edition of each adopted by the regulatory agency in effect at the time of the opening of Bids, except as may be otherwise specifically stated in the Contract Documents.
C. Should any conditions develop not covered by the Contract Documents wherein the finished Work will not comply with current codes, a Change Order detailing and specifying the required Work shall be submitted to and approved by Owner before proceeding with the Work.

1.2 REFERENCES TO REGULATORY REQUIREMENTS

A. Codes, laws, ordinances, rules and regulations referred to shall have full force and effect as though printed in full in these Specifications. Code, laws, ordinances, rules and regulations are not furnished to Contractor, because Contractor is assumed to be familiar with these requirements. The listing of applicable codes, laws, and regulations for hazardous waste abatement Work in the Contract Documents is supplied to Contractor as a courtesy and shall not limit Contractor's responsibility for complying with all applicable laws, regulations, or ordinances having application to the Work. Where conflict among the requirements or with these Specifications occurs, the most stringent requirements shall be used.
B. Conform to referenced codes, laws, ordinances, rules and regulations.

1.3 CODES

A. Codes that apply to Contract Documents include, but are not limited to, the following:
   1. CBC (Part 2, Title 24, CCR, including, without means of limitation, Sections 16A, 102A.23, 308, 420A, 504-506, 904.2.6, 1019 and 1604)
   2. CEC (Part 3, Title 24, CCR)
   3. CMC (Part 4, Title 24, CCR)
   4. CPC (Part 5, Title 24, CCR),
   5. State Elevator Safety Regulations (Part 7, Title 24, CCR)
   6. UPC
   7. UMC
   8. NEC
   9. Sonoma County Code

1.4 LAWS, ORDINANCES, RULES, AND REGULATIONS

A. During prosecution of Work to be done under Contract Documents, comply with applicable laws, ordinances, rules and regulations, including, but not limited to, the following:
   1. Federal:
      a. Americans With Disabilities Act of 1990
      b. 29 CFR, Section 1910.1001, Asbestos
      c. 40 CFR, Subpart M, National Emission Standards for Asbestos

d. Executive Order 11246
e. Federal Endangered Species Act
f. Clean Water Act

2. State of California:
   a. California Code of Regulations, Titles 5, 8, 19, 21, 22, 24 and 25
   b. California Public Contract Code
   c. California Health and Safety Code
   d. California Government Code
   e. California Labor Code
   f. California Civil Code
   g. California Code of Civil Procedure
   h. CPUC General Order 95, Rules for Overhead Electric Line Construction
   i. CPUC General Order 128, Rules for Construction of Underground Electric Supply and Communications Systems
   j. Cal/OSHA
   k. OSHA: Hazard Communications Standards
   l. California Endangered Species Act
   m. Water Code
   n. Fish and Game Code
3. State of California Agencies:
   a. State and Consumer Services Agency
   b. Office of the State Fire Marshall
   c. Office of Statewide Health Planning and Development
   d. Department of Fish and Game
   e. Bay Area Air Quality Management District
   f. San Francisco Bay Regional Water Quality Control Board
   g. North Coast Regional Water Quality Control Board
      1) Order No. 93-61
      2) Order No. 81-73
      3) Clean Water Act Section 401
4. County of Sonoma:
   a. Ordinance 3836R
   b. Building permit
   c. Electrical permit
   d. Grading permit
   e. Encroachment permit
   f. Valley Oak Protection Ordinance
5. Local Agencies:
   a. Applicable City Ordinances
   b. Northern Sonoma County Air Pollution Control District
6. Other Requirements:
   a. National Fire Protection Association (NFPA): Pamphlet 101, Life Safety.
   b. References on Drawings or in Specifications to "code" or "building code" not otherwise identified shall mean the codes specified in this Section 01410, together with all additions, amendments, changes, and interpretations adopted by code authorities of the jurisdiction.

B. Have access to all of the foregoing within 24 hours.
C. Other Applicable Laws, Ordinances and Regulations:

1. Work shall be accomplished in conformance with all applicable laws, ordinances, rules and regulations of federal, state, and local governmental agencies and jurisdictions having authority over the Project.
2. Work shall be accomplished in conformance with all rules and regulations of public utilities and utility districts.
3. Where such laws, ordinances rules, and regulations require more care or greater time to accomplish Work, or require better quality, higher standards or greater size of products, Work shall be accomplished in conformance to such requirements with no change to the Contract Time and Contract Sum, except where changes in laws, ordinances, rules, and regulations occur subsequent to the time of opening of the Bids.

D. Change Orders and Claims. The California Public Contract Code (including but not limited to Section 7105 (d)(2)) applies to all contract procedures for changes, time extensions, change orders (time and money), and claims, and per California Government Code Section 930.2, et seq., Contractor's timely compliance with these procedures is a mandatory prerequisite to filing a Government Code Claim. Any change, alteration, modifications, waiver, or omission to implement these procedures, shall have no legal effect unless approved in advance in a fully executed Change Order approved by the Board. Federal construction law (U.S. v. Holspuch 326 U.S. 234) and the jurisprudence of the Federal District of Columbia Circuit shall supplement (but not supersede) California law on construction claims topics including but not limited to, termination claims, home office overhead claims, and delay/disruption claims.

1.5 PRECEDENCE

A. Where Drawings or Specifications require or describe products or execution of better quality, higher standard or greater size than required by applicable codes, ordinances and standards, Drawings and Specifications shall take precedence so long as such increase is legal.
B. Where no requirements are identified on Drawings or in Specifications, comply with all requirements of applicable codes, ordinances and standards of governing authorities having jurisdiction.
C. Conflicts between referenced regulatory requirements: Comply with the one establishing the more stringent requirement.
D. Conflicts between referenced regulatory requirements and Contract Documents: Comply with the one establishing the more stringent requirement.

1.6 REQUIRED PROVISIONS ON CONTRACT CLAIM RESOLUTION

A. The California Public Contract Code specifies required provisions on resolving contract claims less than $375,000, which are set forth below, and constitute a part of this Contract.
   1. For the purposes of this section, "Claim" means a separate demand by Contractor of $375,000 or less for (1) a time extension, (2) payment or money or damages arising from Work done by or on behalf of Contractor arising under the Contract Documents and payment of which is not otherwise expressly provided for or the Claimant is not otherwise entitled to, or (3) an amount the payment of which is disputed by Owner. In order to qualify as a Claim, the written demand must state that it is a Claim submitted under Article 12 of Document 00700 (General Conditions) and be submitted in compliance with all requirements of Document 00700 (General Conditions), Article 12. Separate Claims which total more than $375,000 do not qualify as a "separate demand of $375,000 or less," as referenced above, and are not subject to this section.

2. A voucher, invoice, payment application, or other routine or authorized form of request for payment is not a Claim for purposes of this section. If such request is disputed as to liability or amount, then the disputed portion of the submission may be converted to a Claim under this section by submitting a separate claim in compliance with Contract Documents claim submission requirements.
3. Caution: This section does not apply to tort claims and nothing in this section is intended nor shall be construed to change the time periods for filing tort claims or actions specified by Chapter 1 and Chapter 2 of Part 3 of Division 3.6 of Title 1 of the California Government Code.

B. Procedure:
1. The Claim must be in writing, submitted in compliance with all requirements of Document 00700 (General Conditions), Article 12, including, but not limited to, the time prescribed by and including the documents necessary to substantiate the Claim, pursuant to Document 00700 (General Conditions), paragraph 12.3. Claims must be filed on or before the day of final payment. Nothing in this section is intended to extend the time limit or supersede notice requirements for the filing of claims as set forth in Document 00700 (General Conditions), Article 12 or elsewhere in the Contract Documents.
2. For Claims of fifty thousand dollars ($50,000) or less
   a. Owner shall respond in writing within 45 days of receipt of the Claim, or
   b. Owner may request in writing within 30 days of receipt of the Claim, any additional documentation supporting the Claim or relating to any defenses or claims Owner may have against Claimant.
      1) If additional information is thereafter required, it shall be requested and provided in accordance with this section, upon mutual agreement of Owner and Claimant.
      2) Owner's written response to the Claim, as further documented, shall be submitted to Claimant within 15 days after receipt of further documentation or within a period of time no greater than taken by Claimant in producing the additional information, whichever is greater.
3. For Claims over Fifty Thousand Dollars ($50,000) and less than or equal to $375,000:
   a. Owner shall respond in writing within 60 days of receipt of the Claim, or
   b. Owner may request in writing within 30 days of receipt of the Claim, any additional documentation supporting the Claim or relating to any defenses or claims Owner may have against Claimant.
      1) If additional information is thereafter required, it shall be requested and provided in accordance with this section, upon mutual agreement of Owner and Claimant;
      2) Owner's written response to the Claim, as further documented, shall be submitted to Claimant within 30 days after receipt of further documentation or within a period of time no greater than taken by Claimant in producing the additional information, whichever is greater.
4. Meet and Confer:
   a. If Claimant disputes Owner's written response, or Owner fails to respond within the time prescribed above, Claimant shall notify Owner, in writing, either within 15 days of receipt of Owner's response or within 15 days of Owner's failure to timely respond, and demand an informal conference to meet and confer for settlement of

the issues in dispute. Upon demand Owner will schedule a meet and confer conference within 30 days for settlement of the dispute.

b. Following the meet and confer conference, if the Claim or any portion remains in dispute, Claimant may file a claim as provided in Chapter 1 (commencing with Section 900) and Chapter 2 (commencing with Section 910) of Part 3 of Division 3.6 of Title 1 of the California Government Code. For purposes of those provisions, the running of the period of time within which a claim must be filed shall be tolled from the time Claimant submits its written claim as set forth in paragraph 12.2.B of Document 00700 (General Conditions), until the time that Claim is denied as a result of the meet and confer process, including any period of time utilized by the meet and confer process.

1.7 COMPLIANCE WITH AMERICANS WITH DISABILITIES ACT

A. Contractor acknowledges that, pursuant to the Americans with Disabilities Act (ADA), programs, services, and other activities provided by a public entity to the public, whether directly or through a contractor, must be accessible to the disabled public. Contractor shall provide the services specified in the Contract Documents in a manner that complies with the ADA and any and all other applicable federal, state, and local disability rights legislation. Contractor agrees not to discriminate against disabled persons in the provision of services, benefits, or activities provided under this Agreement and further agrees that any violation of this prohibition on the part of Contractor, its employees, agents, or assigns shall constitute a material breach of the Contract Documents.

1.8 SUBSTITUTION OF SECURITIES IN LIEU OF RETENTION

A. In accordance with the provisions of Public Contract Code Section 22300, substitution of securities for any moneys withheld under Contract Documents to ensure performance is permitted under following conditions:

1. At request and expense of Contractor, securities listed in Section 16430 of the Government Code, bank or savings and loan certificates of deposit, interest bearing demand deposit accounts, standby letters of credit, or any other security mutually agreed to by Contractor and Owner which are equivalent to the amount withheld under retention provisions of Contract shall be deposited with Controller or with a state or federally chartered bank in California, as the escrow agent, who shall then pay such moneys to Contractor. Upon satisfactory completion of Contract, securities shall be returned to Contractor.
2. Alternatively, Contractor may request and Owner shall make payment of retentions earned directly to the escrow agent at the expense of Contractor. At the expense of Contractor, Contractor may direct the investment of the payments into securities and receive the interest earned on the investments upon the same terms provided for in this Section 01410 for securities deposited by Contractor. Upon satisfactory completion of Contract Documents, Contractor shall receive from escrow agent all securities, interest, and payments received by the escrow agent from Owner, pursuant to the terms of this Section 01410. Pay to each Subcontractor, not later than 20 Days after receipt of the payment, the respective amount of interest earned, net of costs attributed to retention withheld from each Subcontractor, on the amount of retention withheld to insure the performance of Contractor.
3. Contractor shall be beneficial owner of securities substituted for moneys withheld and shall receive any interest thereon.

4. Enter into escrow agreement with Controller according to Document 00680 (Escrow Agreement for Security Deposits in Lieu of Retention), as authorized under Public Contract Code Section 22300, specifying amount of securities to be deposited, terms and conditions of conversion to cash in case of default of Contractor, and termination of escrow upon completion of Contract Documents.
5. Public Contract Code Section 22300 is hereby incorporated in full by this reference.

PART 2 PRODUCTS – NOT USED

PART 3 EXECUTION – NOT USED

END OF SECTION

SECTION 01420

REFERENCES AND DEFINITIONS

PART 1 GENERAL

1.1 SUMMARY

A. Section Includes: Reference standards, abbreviations, symbols, definitions, and terminology used in Contract Documents.
B. Full titles are given in this Section for standards cited in other Sections of Specifications.
C. Material and workmanship specified by reference to number, symbol, or title of specific standard such as state standard, commercial standard, federal specifications, technical society, or trade association standard, or other similar standard, shall comply with requirements of standards except when more rigid requirements are specified or required by applicable codes.
D. Standards referred to, except as modified herein, shall have full force and effect as though printed in the Contract Documents. Standards are not furnished to Contractor because manufacturers and trades involved are assumed to be familiar with their requirements.

1.2 REFERENCE TO STANDARDS AND SPECIFICATIONS OF TECHNICAL SOCIETIES; REPORTING AND RESOLVING DISCREPANCIES

A. Reference to standards, specifications, manuals, or codes of any technical society, organization, or association, or to the laws or regulations of any governmental authority, whether such reference be specific or by implication, shall mean the latest standard, specification, manual, code, or laws or regulations (including all amendments, changes, errata, addenda, and supplements) in effect at the time of opening of Bids, except as may be otherwise specifically stated in the Contract Documents.
   1. When an edition or effective date of a reference is not given, it shall be understood to be the current edition or latest revision published as of the date of opening Bids.
      a. Exception: Comply with issues in effect as listed in governing legal requirements.
B. If during the performance of the Work, Contractor discovers any conflict, error, ambiguity, or discrepancy within the Contract Documents or between the Contract Documents and any provision of any such law or regulation applicable to the performance of the Work or of any such standard, specification, manual, or code, or of any instruction of any supplier, report it in writing at once by submitting a RFI to Owner, and do not proceed with the Work affected thereby until consent to do so is given by Owner.
C. Except as otherwise specifically stated in the Contract Documents or as may be provided by Change Order, CCD, or Supplemental Instruction, the provisions of the Contract Documents shall take precedence in resolving any conflict, error, ambiguity, or discrepancy between the provisions of the Contract Documents and:
   1. The provisions of any such standard, specification, manual, code, or instruction (whether or not specifically incorporated by reference in the Contract Documents); or
   2. The provisions of any such laws or regulations applicable to the performance of the Work (unless such an interpretation of the provisions of the Contract Documents would result in violation of such law or regulation).
D. No provision of any such standard, specification, manual, code, or instruction shall be effective to change the duties and responsibilities of Owner, Contractor, or Engineer, or any of their subcontractors, consultants, agents, or employees, from those set forth in the

Contract Documents, nor shall it be effective to assign to Owner, Engineer, or any of their consultants, agents, representatives or employees any duty or authority to supervise or direct the furnishing or performance of the Work or any duty or authority to undertake responsibility inconsistent with the provisions of the Contract Documents.

E. Comply with the applicable portions of standards and specifications published by the technical societies, institutions, associations, and governmental agencies referred to in Specifications.

F. Referenced Grades, Classes, and Types: Where an alternative or optional grade, class, or type of product or execution is included in a reference but is not identified in Drawings or in Specifications, provide the highest, best, and greatest of the alternatives or options for the intended use and prevailing conditions.

G. Jobsite Copies:
   1. Obtain and maintain at the Site copies of reference standards identified on Drawings and in Specifications in order to properly execute the Work.
   2. At a minimum, the following shall be readily available at the Site:
      a. Safety Codes: State of California, Division of Industrial Safety regulations.

H. ASTM and ANSI References: Specifications and Standards of the American Society for Testing and Materials International (ASTM International) and the American National Standards Institute (ANSI) are identified in the Drawings and Specifications by abbreviation and number only and may not be further identified by title, date, revision, or amendment. It is presumed that Contractor is familiar with and has access to these nationally- and industry-recognized specifications and standards.

1.3 ABBREVIATIONS

A. Listed hereinafter are the various organizations or references which may appear in the Contract Documents, along with their respective acronyms and/or abbreviations:

AA	Aluminum Association
AABC	Associated Air Balance Council
AAMA	Architectural Aluminum Manufacturers Association
AAP	Affirmative Action Program
AASHTO	American Association of State Highway and Transportation Officials
AB	Aggregate Base
ABMA	American Bearing Manufacturers Association
ABPA	American Board Products Association
ACI	American Concrete Institute
ADA	Americans with Disabilities Act
AED	Association of Equipment Distributors
AFBMA	Anti-friction Bearing Manufacturers Association
AGA	American Gas Association
AGMA	American Gear Manufacturers Association
AISC	American Institute of Steel Construction
AISI	American Iron and Steel Institute
AITC	American Institute of Timber Construction
AMCA	Air Moving and Conditioning Association, Inc.
ANSI	American National Standards Institute (formerly American Standards Association)
APA	American Plywood Association

API	American Petroleum Institute
ARI	Air-Conditioning and Refrigeration Institute
ASCE	American Society of Civil Engineers
ASHRAE	American Society of Heating, Refrigeration, and Air-Conditioning Engineers
ASME	American Society of Mechanical Engineers
ASSE	American Society of Safety Engineers
ASTM	ASTM International
AWCI	Association of the Wall and Ceiling Industries
AWG	American Wire Gauge
AWPA	American Wood-Preservers' Association
AWPB	American Wood Preservers Bureau
AWS	American Welding Society
AWWA	American Water Works Association
BHMA	Builders Hardware Manufacturers Association
BIL	Basic Insulation Level
BOD	Biological Oxygen Demand
Cal/OSHA	California Occupational Safety and Health Administration
Caltrans	State of California, Department of Transportation
CBC	California Building Code
CCD	Construction Change Directive
CCR	California Code of Regulations
CEC	California Electric Code or California Energy Commission
CF	Cubic Foot or Cubic Feet
CFM	Cubic Feet per Minute
CFR	Code of Federal Regulations
CGA	Common Ground Alliance
CI	Chlorine Institute, Inc.
CISPI	Cast Iron Soil Pipe Institute
CL	Center Line
CLMFI	Chain Link Fence Manufacturers Institute
CMAA	Crane Manufacturers Association of America, Inc.
CMC	California Mechanical Code
CO	Change Order
COE	United States Army Corps of Engineers
CPC	California Plumbing Code
CPM	Critical Path Method
CPUC	California Public Utilities Commission
CRA	California Redwood Association
CRSI	Concrete Reinforcing Steel Institute
CS	Commercial Standards, U.S. Department of Commerce
CSA	Canadian Standards Association
CY	Cubic Yard or Cubic Yards
DBE	Disadvantaged Business Enterprise
DFPA	Douglas Fir Plywood Institute
DFT	Dry Film Thickness
DHI	Door and Hardware Institute
EIA	Electronic Industries Association

EPA	Environmental Protection Agency
ETL	Electrical Testing Laboratories
FGMA	Flat Glass Marketing Association
FPS	Feet per Second or Fluid Power Society
FS	Federal Specifications
GA	Gypsum Association
GPM	Gallons Per Minute
Greenbook	Standard Specifications for Public Works Construction
HI	Hydraulic Institute
HMI	Hoist Manufacturer's Institute
HMMA	Hollow Metal Manufacturer's Association
HP	Horse Power
HPMA	Hardwood Plywood Manufacturers Association
HVAC	Heating, Ventilating and Air Conditioning
IACS	International Annealed Copper Standards
IAPMO	International Association of Plumbing and Mechanical Officials
ICBO	International Conference of Building Officials
ICEA	Insulated Cable Engineers Association
ID	Identification or Inside Diameter
IEEE	Institute of Electrical and Electronic Engineers
IES	Illuminating Engineering Society
ISA	International Society of Arboriculture
ISAS	Instrumentation, Systems, and Automation Society
ISO	International Organization for Standardization
JATC	Joint Apprenticeship Training Committee
JV	Joint Venture
LBE	Local Business Enterprise
LLC	Limited Liability Corporation or Company
LS	Lump Sum
M.I.	Middle Initial
M/WBE	Minority and/or Woman-Owned Business Enterprise
MBE	Minority Business Enterprise
MGD	Million Gallons per Day
MIA	Masonry Institute of America
MIA	Marble Institute of America
MLSFA	Metal Lath/Steel Framing Association
MS	Military Specifications
MSDS	Material Safety Data Sheet
MSS	Manufacturers Standardization Society of the Valve & Fitting Industry
NAAMM	National Association of Architectural Metal Manufacturers
NACE	National Association of Corrosion Engineers
NBS	National Bureau of Standards
NEC	National Electric Code
NEMA	National Electric Manufacturers Association
NESC	National Electrical Safety Code
NFoPA	National Forest Products Association
NFPA	National Fire Protection Association
NIC	Not In Contract

NIOSH	National Institute for Occupational Safety and Health
NIST	National Institute of Standards and Technology
NPT	National Pipe Thread
NRMCA	National Ready Mixed Concrete Association
NSF	National Sanitation Foundation
NTS	Not to Scale
NWWDA	National Wood Windows and Doors Association
OC	On Center
OD	Outside Diameter
OSHA	Occupational Safety and Health Administration
OSHPD	Office of Statewide Health Planning and Department
PCA	Portland Cement Association
PCI	Prestressed Concrete Institute
PDI	Plumbing and Drainage Institute
PG&E	Pacific Gas and Electric Company
PL	Property Line
PLC	Programmable Logic Controller
PM	Preventive Maintenance
PPM	Parts per Million
PR	Proposal Request
PRMD	Permits and Resource Management Department, County of Sonoma
PS	Product Standard, U. S. Department of Commerce
PSF or psf	Pounds per Square Foot
PSI or psi	Pounds per Square Inch
PSIG	Pounds per Square Inch Gauge
PVC	Polyvinyl chloride
RC	Relative Compaction
RFI	Request for Information
RFP	Request for Proposals
RFS	Request for Substitution
RIS	Redwood Inspection Service
RPM	Revolutions per Minute
SAE	Society of Automotive Engineers
SDeI	Steel Deck Institute
SDoI	Steel Door Institute
SDR	Standard Dimension Ratio
SF	Square Foot or Square Feet
SFM	State of California, Office of State Fire Marshal
SIDR	Standard Inside Dimension Ratio
SIGMA	Sealed Insulating Glass Manufacturers Association
SJI	Steel Joint Institute
SMACNA	Sheet Metal and Air Conditioning Contractors National Association
SPIB	Southern Pine Inspection Bureau
SSPC	Society for Protective Coating (formerly Steel Structures Painting Council)
SWI	Steel Window Institute
TCA	Tile Council of America
TIE	Time Impact Evaluation
TMS	The Masonry Society

TPI	Truss Plate Institute Inc.
UFC	Uniform Fire Code
UL	Underwriters' Laboratories, Inc.
UMC	Uniform Mechanical Code
UPC	Uniform Plumbing Code
USA	Underground Service Alert
USACE	United States Army Corps of Engineers
USC	United States Code
VOC	Volatile Organic Compounds
WBE	Women's Business Enterprise
WCLIB	West Coast Lumber Inspection Bureau
WHI	Warnock Hersey International
WIC	Woodwork Institute of California
WWPA	Western Wood Products Association
WWPI	Western Wood Preservers Institute

B. Abbreviations in Specifications:

cm	centimeter (centimeters)
Co.	Company
Corp.	Corporation
cu	Cubic
dia	diameter
Div	Division
ft	foot (feet)
g	gram (grams) or Standard Acceleration of Gravity
gal	gallon (gallons)
gpd	gallons per Day
hr	hour
in	inch (inches)
Inc.	Incorporated
kg	kilogram (kilograms)
km	kilometer (kilometers)
kVAR	kilovolts amperes reactive
kW	kilowatt
l	liter (liters)
lb(s)	Pound(s)
m	meter (meters)
mfr	manufacturer
mg	milligram (milligrams)
ml/mls	milliliter (milliliters)
mm	millimeter (millimeters)
No	number
sq	square
Sta	Station
T & G	tongue and groove
Typ	typical
US	United States

yd	yard (yards)

C. Abbreviations on Drawings:
   1. As listed for Specifications above.
   2. Additional abbreviations, used only on Drawings, are indicated thereon.

1.4 SYMBOLS

A. Symbols in Specifications:

:	"shall be" or "shall" - where used within sentences or paragraphs
#1	number
1#	pound
&	and
%	percent
C	Centigrade
F	Fahrenheit
°	degree
/	"per," except where used to combine words; example: power/fuel, and in that case it means "and"
"	inch (inches)
'	foot (feet)
@	at

B. Symbols on Drawings:
   1. As listed for Specifications above.
   2. Symbols, used only on Drawings, are indicated thereon.

1.5 DEFINITIONS

A. Wherever any of the words or phrases defined below, or a pronoun used in place thereof, is used in any part of the Contract Documents, it shall have the meaning here set forth. In the Contract Documents, the neuter gender includes the feminine and masculine, and the singular number includes the plural.

B. The following definitions shall apply regardless of capitalization unless the context otherwise requires:
   1. Wherever words "as directed," "as required," "as permitted," or words of like effect are used, it shall be understood that direction, requirements, or permission of Owner is intended. Words "sufficient," "necessary," "proper," and the like shall mean sufficient, necessary, or proper in judgment of Owner. Words "approved," "acceptable," "satisfactory," "favorably reviewed," or words of like import, shall mean approved by, or acceptable to, or satisfactory to, or favorably reviewed by Owner.
   2. Wherever the word "may" or "ought" is used, the action to which it refers is discretionary. Wherever the word "shall" or "will" is used, the action to which it refers is mandatory.
   3. Addenda: Written or graphic instruments issued prior to the opening of Bids, which clarify, correct, or change the bidding requirements or the Contract Documents. Addenda shall not include the minutes of the Pre-Bid Conference, if any, or Site Visit.

4. Agency: The Sonoma County Water Agency (SCWA), a public agency of the State of California, acting under and by virtue of the authority vested in the Owner by the laws of the State of California.
5. Agreement (Document 00520): Agreement is the basic Contract Document that binds the parties to construction Work. Agreement defines relationships and obligations between Owner and Contractor and by reference incorporates Conditions of Contract, Drawings, and Specifications and contains Addenda and all Modifications subsequent to execution of Contract Documents.
6. Alternate: Work added to or deducted from the base Bid, if accepted by Owner.
7. Application for Payment: Written application for monthly or periodic progress or final payment made by Contractor complying with the Contract Documents.
8. Approved Equal: Approved in writing by Owner as being of equivalent quality, utility and appearance.
9. Asbestos: Any material that contains more than one percent asbestos and is friable or is releasing asbestos fibers into the air above current action levels established by OSHA or Cal/OSHA.
10. Bid: The offer or proposal of the Bidder submitted on the prescribed form(s) setting forth the prices for the Work to be performed.
11. Bidder: One who submits a Bid.
12. Bidding Documents: All documents comprising the Project Manual (including all documents and Specification Sections listed in Document 00010 [Table of Contents]), including documents supplied for bidding purposes only and Contract Documents.
13. Board: The Board of Directors of the Owner.
14. Business Day: Any Day other than Saturday, Sunday, and the following days that have been designated as holidays by Owner. If a holiday falls on a Saturday, the preceding Friday will be the holiday. If a holiday falls on a Sunday, the following Monday will be the holiday.
    a. New Year's Day, January 1;
    b. Martin Luther King Jr.'s Birthday, third Monday in January;
    c. Lincoln's Birthday, February 12;
    d. Presidents' Day, third Monday in February;
    e. Memorial Day, last Monday in May;
    f. Independence Day, July 4;
    g. Labor Day, first Monday in September;
    h. Veterans' Day, November 11;
    i. Thanksgiving Day, as designated by the President;
    j. The Day following Thanksgiving Day;
    k. Christmas Day, December 25; and
    l. Each day appointed by the Governor of California and formally recognized by the Sonoma County Board of Supervisors as a day of mourning, thanksgiving, or special observance.
15. By Owner: Work that will be performed by Owner or its agents at the Owner's expense.

16. By Others: Work that is outside scope of Work to be performed by Contractor under this Contract, which will be performed by Owner, other contractors, or other means.
17. Change Order: A written instrument prepared by Owner and signed by Owner and Contractor, stating their agreement upon all of the following:
    a. a change in the Work;
    b. the amount of the adjustment in the Contract Sum, if any; and
    c. the amount of the adjustment in the Contract Time, if any.
18. Code Inspector: A local or state agency responsible for the enforcement of applicable codes and regulations.
19. Concealed: Work not exposed to view in the finished Work, including within or behind various construction elements.
20. Construction Change Directive ("CCD"): A written order prepared and signed by Owner, directing a change in the Work and stating a proposed basis for adjustment, if any, in the Contract Sum or Contract Time, or both.
21. Contract Conditions or Conditions of the Contract: Consists of two parts: General Conditions and Supplementary Conditions.
    a. General Conditions are general clauses that are common to the Owner Contracts, including Document 00700 (General Conditions).
    b. Supplementary Conditions modify or supplement General Conditions to meet specific requirements for these Contract Documents, including Document 00800 (Supplementary Conditions).
22. Contract Documents and Contract: Contract Documents and Contract shall consist of the documents identified as the Contract Documents in Document 00520 (Agreement), plus all changes, Addenda, and Modifications thereto.
23. Contract Modification: Either:
    a. a written amendment to Contract signed by Contractor and Owner; or
    b. a Change Order; or
    c. a Construction Change Directive; or
    d. a written directive for a minor change in the Work issued by Owner.
24. Contract Sum: The sum stated in the Agreement and, including authorized adjustments, the total amount payable by Owner to Contractor for performance of the Work and the Contract Documents. The Contract Sum is also sometimes referred to as the Contract Price or the Contract Amount.
25. Contract Time: The number or numbers of Days or the dates stated in the Agreement:
    a. to achieve Substantial Completion of the Work or designated Milestones; and/or
    b. to complete the Work so that it is ready for final payment and is accepted.
26. Contractor: The person or entity identified as such in the Agreement and referred to throughout the Contract Documents as if singular in number and neutral in gender. The term "Contractor" means the Contractor or its authorized representative.
27. Contractor's Employees: Persons engaged in execution of Work under Contract as direct employees of Contractor, as Subcontractors, or as employees of Subcontractors.
28. Day: One calendar day of 24 hours measured from midnight to the next midnight, unless the word "day" is specifically modified to the contrary.

29. Defective: An adjective which, when modifying the word "Work," refers to Work that is unsatisfactory or unsuited for the use intended, faulty, or deficient, that does not conform to the Contract Documents, or does not meet the requirements of any inspection, reference standard, test or approval referred to in the Contract Documents (including but not limited to approval of Samples and "or equal" items), or has been damaged prior to final payment (unless responsibility for the protection thereof has been assumed by Owner). Owner is the judge of whether Work is Defective.
30. Drawings: The graphic and pictorial portions of Contract Documents, wherever located and whenever issued, showing the design, location and dimensions of the Work, generally including plans, elevations, sections, details, schedules, and diagrams.
31. Engineer: If used elsewhere in the Contract Documents, "Engineer" shall mean a person holding a valid California State Architect's or Engineer's license representing the Owner in the administration of the Contract Documents. Engineer may be an employee of or an independent consultant to Owner. When Engineer is referred to within the Contract Documents and no Engineer has in fact been designated, then the matter shall be referred to Owner. The term Engineer shall be construed to include employees of Engineer and/or employees that Engineer supervises. When the designated Engineer is an employee of Owner, his or her authorized representatives on the Project will be included under the term Engineer. If Engineer is an employee of Owner, Engineer is the beneficiary of all Contractor obligations to Owner, including without limitation, all releases and indemnities.
32. Equal: Equal in opinion of Owner. Burden of proof of equality is responsibility of Contractor.
33. Exposed: Work exposed to view in the finished Work, including behind louvers, grilles, registers and various other construction elements.
34. Final Acceptance or Final Completion: Owner's acceptance of the Work as satisfactorily completed in accordance with Contract Documents. Requirements for Final Acceptance/Final Completion include, but are not limited to:
    a. All systems having been tested and accepted as having met requirements of Contract Documents.
    b. All required instructions and training sessions having been given by Contractor.
    c. All required permitting reports.
    d. All Project Record Documents having been submitted by Contractor, reviewed by Owner, and accepted by Owner.
    e. All punch list Work, as directed by Owner, having been completed by Contractor.
    f. Generally all Work, except Contractor maintenance after Final Acceptance/Final Completion, having been completed to satisfaction of Owner.
35. Force Account: Work directed to be performed without prior agreement as to lump sum or unit price cost thereof, and which is to be billed at cost for labor, materials, equipment, taxes, and other costs, plus a specified percentage for overhead and profit.
36. Furnish: Supply only, do not install.
37. Indicated: Shown or noted on the Drawings.
38. Install: Install or apply only, do not furnish.

39. Latent: Not apparent by reasonable inspection, including but not limited to, the inspections and research required as a condition to bidding under Document 00700 (General Conditions).
40. Law: Unless otherwise limited, all applicable laws including without limitation all federal, state, and local laws, statutes, standards, rules, regulations, ordinances, and judicial and administrative decisions.
41. Material: This word shall be construed to embrace machinery, manufactured articles, materials of construction (fabricated or otherwise), and any other classes of material to be furnished in connection with Contract, except where a more limited meaning is indicated by context.
42. Milestone: A principal event specified in Contract Documents relating to an intermediate completion date or time prior to Substantial Completion of all Work.
43. Modification: Same as Contract Modification.
44. Not in Contract: Work that is outside the scope of Work to be performed by Contractor under Contract Documents.
45. Notice of Completion: Shall have the meaning provided in California Civil Code Section 9204, and any successor statute.
46. Off Site: Outside geographical location of the Project.
47. Owner: The Agency.
48. Owner-Furnished, Contractor-Installed: Items furnished by Owner at its cost for installation by Contractor at its cost under Contract Documents.
49. Owner's Representative(s): See Document 00520 (Agreement).
50. Partial Utilization: Use by Owner of a substantially completed part of the Work for the purpose for which it is intended (or a related purpose) prior to Substantial Completion of all of the Work.
51. PCBs: Polyclorinated byphenyls.
52. Phase: A specified portion of the Work (if any) specifically identified as a Phase in Document 00520 (Agreement) or Document 01100 (Summary).
53. Product Data: That information (brochures, catalog sheets, manufacturer's cut sheets, etc.) supplied by vendors having technical and commercial characteristics of the supplied equipment or materials and accompanying commercial terms such as warranties, instructions, and manuals.
54. Progress Report: A periodic report submitted by Contractor to Owner with progress payment invoices accompanying progress schedule. See Section 01320 (Progress Schedules and Reports) and Document 00700 (General Conditions).
55. Project: Total construction of which Work performed under Contract Documents may be whole or part.
56. Project Float: As defined in paragraph 1.2.B.3, Section 01320 (Progress Schedules and Reports).
57. Project Manual: Project Manual consists of Bidding Requirements, Agreement, Bonds, Certificates, Contract Conditions, Drawings, and Specifications.
58. Project Record Documents: All Project deliverables required under Sections 01700 et seq., including without limitation, as-built drawings; Project Record Specifications; Installation, Operation, and Maintenance Manuals; and Machine Inventory Sheets.

59. Provide: Furnish and install.
60. Request for Information ("RFI"): A document prepared by Contractor requesting information regarding the Project or Contract Documents as provided in Section 01250 (Modification Procedures). The RFI system is also a means for Owner to submit Contract Document clarifications or supplements to Contractor.
61. Request for Proposals ("RFP"): A document issued by Owner to Contractor whereby Owner may initiate changes in the Work or Contract Time as provided in Contract Documents. See Section 01250 (Modification Procedures).
62. Request for Substitution ("RFS"): A document prepared by Contractor requesting substitution of materials as permitted and to the extent permitted in Contract Documents. See Section 01600 (Product Requirements).
63. RFI-Reply: A document consisting of supplementary details, instructions, or information issued by Owner that clarifies or supplements Contract Documents, and with which Contractor shall comply. RFI-Replies do not constitute changes in Contract Sum or Contract Time except as otherwise agreed in writing by Owner. RFI-Replies will be issued through the RFI administrative system.
64. Samples: Physical examples of materials, equipment, or workmanship that are representative of some portion of the Work and which establish the standards by which such portion of the Work will be judged.
65. Sanitation Standards: The Sonoma County Water Agency Design and Construction Standards for Sanitation Facilities.
66. Shop Drawings: All drawings, diagrams, illustrations, schedules, and other data or information which are specifically prepared or assembled by or for Contractor and submitted by Contractor to illustrate some portion of the Work.
67. Shown: As indicated on Drawings.
68. Site: The particular geographical location of Work performed pursuant to Contract Documents.
69. Specifications: The written portion of the Contract Documents consisting of requirements for materials, equipment, construction systems, standards, and workmanship for the Work; performance of related services; and are contained in Divisions 1 through 16.
70. Specified: As written in Specifications.
71. Subcontractor: A person or entity that has a direct contract with Contractor to perform a portion of the Work at the Site. The term "Subcontractor" is referred to throughout the Contract Documents as if singular in number and neutral in gender and means a Subcontractor or an authorized representative of the Subcontractor. The term "Subcontractor" does not include a separate contractor or subcontractors of a separate contractor.
72. Substantial Completion: The Work (or a specified part thereof) has progressed to the point where, in the opinion of Owner as evidenced by a Certificate of Substantial Completion, the Work is sufficiently complete, in accordance with Contract Documents, so that the Work (or specified part) can be utilized for the purposes for which it is intended; or if no such certificate is issued, when the Work (or specified part) is complete and ready for final payment as evidenced by written recommendation of

Owner for final payment. The terms "Substantially Complete" and "Substantially Completed" as applied to all or part of the Work refer to Substantial Completion thereof.

73. Superintendence: Executive oversight and charge of the main aspects of construction, including scheduling, sequence of subcontractor Work, and quality control.
74. Supplemental Instruction: A written directive from Owner to Contractor ordering alterations or Modifications that do not result in change in Contract Sum or Contract Time, and do not substantially change Drawings or Specifications. See Section 01250 (Modification Procedures).
75. Testing and special inspection agency: An independent entity engaged by Owner to inspect and/or test the workmanship, materials, or manner of construction of buildings or portions of buildings, to determine if such construction complies with the Contract Documents and applicable codes.
76. Underground Facilities: All pipelines, conduits, ducts, cables, wires, manholes, vaults, tanks, tunnels or other such facilities or attachments, and any encasements containing such facilities that have been installed underground to furnish any of the following services or materials: Electricity, gases, chemicals, steam, liquid petroleum products, telephone or other communications, cable television, sewage and drainage removal, traffic or other control systems, or water.
77. Unit Price Work: Shall be the portions of the Work for which a unit price is provided in Document 00520 (Agreement) or Section 01100 (Summary).
78. Work: The entire completed construction, or the various separately identifiable parts thereof, required to be furnished under the Contract Documents within the Contract Time. Work includes and is the result of performing or furnishing labor and furnishing and incorporating materials and equipment into the construction, and performing or furnishing services and furnishing documents, all as required by the Contract Documents including everything shown in the Drawings and set forth in the Specifications. Wherever the word "work" is used, rather than the word "Work," it shall be understood to have its ordinary and customary meaning.

PART 2 PRODUCTS – NOT USED

PART 3 EXECUTION – NOT USED

END OF SECTION

SECTION 01450

QUALITY CONTROL

PART 1 GENERAL

1.1 SECTION INCLUDES

A. Contractor's Quality Control
B. Quality of the Work
C. Inspections and Tests by Governing Authorities
D. Inspections and Tests by Serving Utilities
E. Inspections and Tests by Manufacturer's Representatives
F. Tests and Inspections by Owner or Owner's Independent Testing and Inspection Agency
G. Additional Testing and Inspection

1.2 CONTRACTOR'S QUALITY CONTROL

A. Contractor's Quality Control: Ensure that products, services, workmanship, and Site conditions comply with requirements of Drawings and Specifications by coordinating, supervising, testing, and inspecting the Work and by utilizing only suitably qualified and appropriately audited, licensed, or trained personnel.
B. Quality Requirements: Work shall be accomplished in accordance with quality requirements of Drawings and Specifications, including, by reference, all codes, laws, rules, regulations, and standards. When no quality basis is prescribed, the quality and testing procedures shall be in accordance with the best-accepted practices of the construction industry for the locale of the Project, for projects of this type, or standards set by engineering or technical societies (e.g., ASTM or ASHRAE), whichever is more stringent.
C. Quality Control Personnel: Employ and assign knowledgeable and skilled personnel as necessary to perform quality control functions to ensure that the Work is provided as required.
D. At Contractor's expense, Contractor may employ a certified independent testing agency to perform compaction tests where there is disagreement. Owner may consider such tests, but will have the authority to make the final determination of relative compaction.
E. At Contractor's expense, Contractor may employ a certified independent welding inspection agency to perform welding inspections. Owner may consider such tests, but will have the authority to make the final determination of welding quality.

1.3 QUALITY OF THE WORK

A. Quality of Products: Unless otherwise indicated or specified, all products shall be new, free of defects, and fit for the intended use.
B. Quality of Installation: All Work shall be produced plumb, level, square and true, or true to indicated angle, and with proper alignment and relationship between the various elements, as indicated or required by Contract Documents.
C. Protection of Completed Work: Take all measures necessary to preserve completed Work free from damage, deterioration, soiling, and staining, until acceptance by Owner.
D. Standards and Code Compliance and Manufacturer's Instructions and Recommendations: Unless more stringent requirements are indicated or specified, comply with manufacturer's instructions and recommendations, reference standards and building code research report requirements in preparing, fabricating, erecting, installing, applying, connecting, and finishing Work.

E. Deviations from Standards and Code Compliance and Manufacturer's Instructions and Recommendations: Secure Owner's advance written consent. Document and explain all deviations from reference standards and building code research report requirements and manufacturer's product installation instructions and recommendations, including acknowledgement by the manufacturer that such deviations are acceptable and appropriate for the Project.

F. Verification of Quality: Work shall be subject to verification of quality by Owner in accordance with provisions of the Contract Documents.
   1. Cooperate by making Work available for inspection.
   2. Such verification may include mill, plant, shop, or field inspection as required.
   3. Provide access to all parts of the Work, including plants where materials or equipment are manufactured or fabricated.
   4. Provide all information and assistance as required, including that by and from subcontractors, fabricators, materials suppliers and manufacturers, for verification of quality by Owner.
   5. Applicable provisions of the Contract Documents shall govern Contract Modifications, if any, resulting from such verification activities.

G. Observations by Owner's Consultants: Periodic and occasional observations of Work in progress will be made by Owner and Owner's consultants as deemed necessary to review progress of Work and general conformance with design intent.

H. Limitations on Inspection, Test, and Observation: Neither employment of independent testing and inspection agency nor observations or tests by Owner and Owner's consultants shall in any manner relieve Contractor of obligation to perform Work in full conformance to all requirements of Contract Documents.

I. Owner's Acceptance and Rejection of Work: Owner reserves the right to reject all Work not in conformance with the requirements of the Drawings and Specifications, or otherwise Defective.

J. Correction of Defective Work: Defective Work shall be modified, replaced, repaired or redone by the Contractor at no change in Contract Sum or Contract Time.

K. Acceptance of Defective Work: Acceptance of Defective Work, without specific written acknowledgement and approval of Owner, shall not relieve the Contractor of the obligation to correct such Work.

L. Contract Adjustment for Defective Work: Should Owner determine that it is not feasible or in Owner's interest to require Defective Work to be repaired or replaced, an equitable reduction in Contract Sum shall be made by agreement between Owner and Contractor. If equitable amount cannot be agreed upon, a Construction Change Directive will be issued and the amount in dispute resolved in accordance with applicable provisions of Document 00700 (General Conditions).

M. Non-Responsibility for Defective Work: Owner and Owner's consultants disclaim any and all responsibility for Work produced not in conformance with the Drawings and Specifications.

N. Responsibility for Defective Work: Contractor shall have full responsibility for all consequences resulting from Defective Work, including without limitation all delays, disruptions, extra inspection and correction costs by Contractor and Owner and re-Work, and extra time and costs of all types. Contractor waives excuses for Defective Work relating to Owner's prior review of Submittals and/or prior failure to notice Defective Work in place on inspection.

1.4 INSPECTIONS AND TESTS BY GOVERNING AUTHORITIES

A. Regulatory Requirements for Testing and Inspection: Comply with CBC requirements and all other requirements of governing authorities having jurisdiction.
B. Inspections and Tests by Governing Authorities: Cause all tests and inspections required by governing authorities having jurisdiction to be made for Work under this Contract.
   1. Such authorities may include, but are not limited to PRMD, Fire Department, and similar agencies.
   2. Except as specifically noted, scheduling, conducting and paying for such inspections shall be solely the Contractor's responsibility.

1.5 INSPECTIONS AND TESTS BY SERVING UTILITIES

A. Inspections and Tests by Serving Utilities: Cause all tests and inspections required by serving utilities to be made for Work under this Contract. Scheduling, conducting, and paying for such inspections shall be solely the Contractor's responsibility.

1.6 INSPECTIONS AND TESTS BY MANUFACTURER'S REPRESENTATIVES

A. Inspections and Tests by Manufacturer's Representatives: Cause all tests and inspections specified to be conducted by materials or systems manufacturers to be made. Additionally, all tests and inspections required by materials or systems manufacturers as conditions of warranty or certification of Work shall be made, the cost of which shall be included in the Contract Sum.

1.7 TESTS AND INSPECTIONS BY OWNER OR OWNER'S INDEPENDENT TESTING AND INSPECTION AGENCY

A. Owner may conduct or Owner may select an independent testing and inspection agency or agencies to conduct tests and inspections as indicated on Drawings, in Specifications, and as required by governing authorities having jurisdiction.
B. Responsibility for payment for such tests and inspections shall be as indicated in paragraph 1.7D below. All time and costs for Contractor's service related to such tests and inspections shall be included in Contract Time and Contract Sum.
C. Contractor shall pay for all additional charges by testing and inspection agencies and governing authorities having jurisdiction due to the following:
   1. Contractor's failure to properly schedule or notify testing and inspection agency or authorities having jurisdiction.
   2. Changes in sources, lots, or suppliers of products after original tests or inspections.
   3. Changes in means, methods, techniques, sequences, and procedures of construction that necessitate additional testing, inspection, and related services.
   4. Changes in mix designs for concrete and mortar after review and acceptance of submitted mix design.
   5. Contractor-submitted requests to change materials or products, which are accepted, but require testing and/or reinspection beyond original design.
D. In addition to tests to be performed by Contractor (and to be paid by Contractor) as required elsewhere in Contract Documents, tests and special inspections that may be performed by Owner or Owner's independent testing and inspection agency or agencies and paid by Owner include, but are not limited to, the following:

SECTION	TESTS
01735	Roof deck moisture
07540	Weld tests (membrane welding)

E. Owner may perform tests at any time at its discretion.

F. California Test Method No. 216 (Relative Compaction of Untreated and Treated Soils and Aggregates) and 231 (Relative Compaction of Untreated/Treated Soils and Aggregates [Area Concept Utilizing Nuclear Gauges]) shall be modified as follows:
   1. In lieu of the specified 10-pound hammer, a Test Lab Model No. F-590 Mechanical Compactor (or equal) with a 10-pound hammer will be used.
   2. In lieu of the specified split cylindrical mold, a non-split cylindrical mold of the same diameter and wall thickness will be used.
   3. Any of the provisions of Test Method No. 216 which conflict with the use of such equipment described in (1) and (2) are considered void to the extent they preclude the use of such equipment.
   4. In lieu of the specified test form, an Owner standard form will be used.
   5. Correction for oversize material may be obtained from a table based upon the given equations and the coefficient for +3/4-inch aggregate will be computed from the following formulae:

      $Y = 1.0$ for $P = 10$ to 20
      $Y = 1.0 - .002 (P - 20)$ for $P = 20$ to 50

      where:

      Y = coefficient for 3/4″ aggregate
      P = percent retained on 3/4″ screen

   6. In-place density and relative compaction will be determined on the basis of individual test sites in lieu of the area concept.

G. Test and Inspection Reports: After each inspection and test by an independent testing and inspection agency or agencies, one copy of report shall be promptly submitted to Owner, who will distribute copies to Contractor and any agency having jurisdiction (if required by Code).
   1. Reports shall clearly identify the following:
      a. Date issued.
      b. Project name and number.
      c. Identification of product and Specifications Section in which Work is specified.
      d. Name of inspector.
      e. Date and time of sampling or inspection.
      f. Location in Project where sampling or inspection was conducted.
      g. Type of inspection or test.
      h. Date of test.
      i. Results of tests.
      j. Comments concerning conformance with Contract Documents and other requirements.
   2. Test reports shall indicate specified or required values and shall include statement whether test results indicate satisfactory performance of products.
   3. Samples taken but not tested shall be reported.

4. Test reports shall confirm that methods used for sampling and testing conform to specified test procedures.
5. When requested, testing and inspection agency shall provide interpretations of test results.

H. Contractor Responsibilities for Inspections and Tests:
1. Unless specified otherwise, notify Owner and testing agency 72 hours in advance of expected time of each test and inspection, and for all other operations requiring inspection and testing services, by submitting Contractor's inspection request in writing (or, if Owner provides a specific form, on that form).
   a. When tests or inspections cannot be performed after such notice, due to Contractor's negligence, reimburse Owner for testing and inspection agency personnel and travel expenses incurred.
2. Deliver to laboratory or designated location, adequate samples of materials proposed to be used that require advance testing, together with proposed mix designs.
3. Cooperate with testing and inspection agency personnel, Owner, and Owner's consultants. Provide access to Work areas and off-Site fabrication and assembly locations, including during weekends and after normal Work hours.
4. Provide incidental labor and facilities to provide safe access to Work to be tested and inspected, to obtain and handle Samples at the Site or at source of products to be tested, and to store and cure test Samples.
5. Provide, at least 15 Days in advance of first test or inspection of each type, a schedule of tests or inspections indicating types of tests or inspections and their scheduled dates.

1.8 ADDITIONAL TESTING AND INSPECTION

A. If initial tests or inspections made by Owner or the testing and inspection agency reveal that materials do not comply with Contract Documents, or if Owner has reasonable doubt that materials do not comply with Contract Documents, additional tests and inspections shall be made as directed.
1. If additional tests and inspections establish that materials comply with Contract Documents, Owner shall pay all costs for such tests and inspections.
2. If additional tests and inspections establish that materials do not comply with Contract Documents, all costs of such tests and inspections shall be deducted from Contract Sum.
3. If Work requiring inspection is covered by follow-on or follow-up Work before it is inspected, uncover Work so proper inspections can be performed. All costs of such tests and inspections shall be deducted from Contract Sum.

PART 2 PRODUCTS – NOT USED

PART 3 EXECUTION – NOT USED

END OF SECTION

SECTION 01500

TEMPORARY FACILITIES AND CONTROLS

PART 1 GENERAL

1.1 SUMMARY

A. Section Includes:
1. Temporary Electricity
2. Temporary Telephone
3. Temporary Water
4. Temporary Sanitary Facilities
5. Temporary Barriers and Enclosures
6. Tree and Plant Protection
7. Water Control
8. Noise Control
9. Removal of Temporary Facilities and Controls

1.2 DEFINITIONS

A. Dripline: The area on the ground from the trunk of any tree to the point directly below the outermost tips of the foliage of that tree.
B. Tree Protection Zone (TPZ): A space above and below ground within which trees are to be retained and protected. May extend beyond the Dripline when practical.
C. Tree damage: Tree damage shall include, but not be limited to, the following: significant injury to the root system or other parts of a tree including burning, application of toxic substances, damaging through contact with equipment or machinery, changing the natural grade within the TPZ, compacting the soil within the TPZ, interfering with the normal water requirements of the tree, unauthorized trenching or excavating within the TPZ, or unauthorized removal of more than 1/3 of the live wood, foliage, or roots.

1.3 TEMPORARY ELECTRICITY

A. Contractor may make arrangements with Owner to use the 120-VAC convenience power receptacles at the building, if needed. If voltages other than 120-VAC (or higher loads than the existing circuits can provide) are required, make separate arrangements for such service with Pacific Gas and Electric Company.

1.4 TEMPORARY TELEPHONE

A. Provide, maintain, and pay for telephone service to field office at time of Project mobilization.

1.5 TEMPORARY WATER

A. Provide, maintain, and pay for suitable quality water service required for construction operations.
B. Contractor may use Owner-provided water from hose bibs in irrigation boxes as indicated at north end of North Orchard, south side of lunchroom patio, and south side of South Orchard for use on this Project. Contact Owner three Days prior to commencement of Work to coordinate using Owner's water. Owner will provide and install a backflow prevention device and water meter if Owner determines it to be necessary. This water will only be available from 8:00 a.m. to 5:00 p.m. Monday through Friday (excluding holidays). Should

Owner determine, in its sole discretion, that Contractor's use of Owner's water is excessive, Owner may terminate water delivery. No other Owner-provided water will be made available to Contractor for this Project.

1.6 TEMPORARY SANITARY FACILITIES

A. Provide and maintain required temporary buildings with sanitary toilets for use of all workers.
B. Comply with all minimum requirements of the Health Department or other public agency having jurisdiction; maintain in a sanitary condition at all times.

1.7 TEMPORARY BARRIERS AND ENCLOSURES

A. Provide barriers to prevent unauthorized entry to construction areas, to allow for Owner's use of Site, and to protect existing facilities and adjacent properties from damage from construction operations.
B. Provide barricades required by governing authorities to control public access to existing buildings.
C. Protect vehicular traffic, stored materials, Site, and structures from damage.

1.8 TREE AND PLANT PROTECTION

A. Root protection:
   1. Provide temporary fencing around the TPZ of the Protected North and South Orchards. Install TPZ fencing as indicated to allow Contractor access to hose bibs in the irrigation valve boxes from the perimeter sidewalk or driveway.
B. Exposure to harmful substances: No storage or dumping of any substances that may be harmful to trees shall occur at any location on the Site.
C. Where construction is to be performed in the vicinity of trees and shrubbery, the Work shall be carried on in a manner that will cause minimum damage. Owner will designate trees that are to be removed. Under no circumstances are additional trees to be removed without written permission from Owner. Trees and shrubbery that are not to be removed shall be protected from injury or damage resulting from Contractor's operations.
D. Limb Protection: Use small construction equipment as necessary to minimize removal of or avoid damage to overhanging tree branches. Remove limbs only when directed by Owner. Prune or remove limbs, if authorized, in accordance with ANSI A300. Owner will provide a copy of the guidelines upon request. "Heading" of any tree will not be permitted.
E. All damage shall be immediately reported to Owner, who will file a report so that remedies may be determined.
F. For any tree that is removed without Owner's permission or is irreparably damaged, in the opinion of Owner, Owner may elect to pursue any of the following remedies in its sole discretion:
   1. Require Contractor to repair by pruning, if possible, or replace trees not intended for removal. Whether or not a tree can be repaired by pruning will be determined by Owner. Subsequent pruning, if appropriate, shall be conducted by a Certified Arborist at Contractor's expense.
   2. Require Contractor to remove trees that cannot be repaired by pruning, and replace with new trees of minimum 4 inch caliper.
G. Assess money damages in the amount of $27.00 per square inch of cross section, measured at 4 ½ feet above ground, but not less than $250.00, which damages shall be deducted from monies due or to become due under the Contract. If tree protection is not performed or is

not performed adequately, and Owner determines that a tree has been irreparably damaged, Owner may assess the same damages as for unauthorized removal of a tree.

1.9 WATER CONTROL

A. Protect Site from puddling or running water.
B. Provide water barriers as required to protect Site from soil erosion.

1.10 NOISE CONTROL

A. When required by OSHA Standards, construction workers shall be provided with ear protection to operate equipment.
B. Ensure to Owner that all construction equipment and vehicles used for the Work are equipped with properly installed engine mufflers where applicable.

1.11 REMOVAL OF TEMPORARY FACILITIES AND CONTROLS

A. Remove temporary utilities, equipment, facilities, and materials prior to final inspection.
B. Clean and repair damage caused by installation or use of temporary Work.
C. Restore existing facilities used during construction to original condition. Restore permanent facilities used during construction to specified condition.

PART 2 PRODUCTS – NOT USED

PART 3 EXECUTION – NOT USED

END OF SECTION

SECTION 01540

SITE SECURITY AND SAFETY

PART 1 GENERAL

1.1 SUBMITTALS

A. Safety Program.
B. Fire Protection Plan.

1.2 PROTECTION

A. Continuously maintain protection as necessary to protect the Work, as a whole and in part, and adjacent property and improvements from accidents, injuries or damage.
B. Properly protect the Work:
   1. With lights, guard rails, temporary covers and barricades.
   2. Enclose excavations with proper barricades.
   3. Brace and secure all parts of the Work against storm and accident.
   4. Provide such additional forms of protection that may be necessary under existing circumstances.
C. Provide and maintain in good condition all protective measures required to adequately protect the public from hazards resulting from the Work and to exclude unauthorized persons from the Work. When regulated by Building Code, Cal OSHA, or other authority, such legal requirements for protection shall be considered as minimum requirements. Be responsible for the protection in excess of such minimum requirements as required.

1.3 CONTROL OF SITE

A. Ensure that no alcohol, firearms, weapons, or controlled substance enters or is used at the Site. Immediately remove from the Site and terminate the employment of any employee found in violation of this provision.

1.4 SAFETY PROGRAM

A. Prior to starting any Work at the Site, submit a Safety Program that has been reviewed and approved by an Industrial Hygienist certified by the American Board of Industrial Hygiene or by a Certified Safety Professional. The Safety Program shall include the name, certification number, and certification seal of the Industrial Hygienist or Certified Safety Professional. Comply with the Safety Program and all applicable federal, state, and local regulation codes, rules, law and ordinances.
B. Receipt and/or review of the Safety Program by Owner, Engineer or Owner's Representative shall not relieve Contractor of any responsibility for complying with all applicable safety regulations.
C. It is essential that Contractor and each Subcontractor implement an effective and vigorous Safety and Health Program to cover their respective portions of the Work. Subject to Contractor's overall responsibility for Project safety, it shall be understood that the full responsibility for providing a safe place to work with respect to their respective portions of the Work rests with each individual Contractor and Subcontractor.
D. Safety Program components:
   1. Injury and Illness Prevention Program (IIPP): Conforming to the General Industrial Safety Orders (CCR Title 8, Division 1, Chapter 4, Subchapter 7, Section 3203), and the California Labor Code (Section 6401.7).

2. Site-Specific Safety and Health Plan (SSHP): Describing health and safety procedures that shall be implemented during the Work in order to ensure safety of the public and those performing the Work. Follow the guidelines for a SSHP listed in CCR Title 8, Division 1, Chapter 4, Subchapter 7, Section 5192, Item (b)(4) f.

E. The wearing of hard hats shall be mandatory at all times for personnel on Site. Supply sufficient hard hats to equip properly all employees and visitors.

F. Whenever an exposure exists, appropriate personal protective equipment (PPE) shall be used by all affected personnel. Supply PPE to all personnel under Contractor's direction.

1.5 SAFETY REQUIREMENTS

A. Standards: Maintain the Project in accordance with state and local safety and insurance standards.

B. Hazards Control:
   1. Store volatile wastes in covered metal containers and remove from premises daily.
   2. Prevent accumulation of wastes that create hazardous conditions.
   3. Provide adequate ventilation during use of volatile or noxious substances.

C. Conduct cleaning and disposal operations to comply with local ordinances and anti-pollution laws.
   1. Do not burn or bury rubbish or waste material on the Site.
   2. Do not dispose of volatile wastes such as mineral spirits, oil, or paint thinner in storm or sanitary drains.
   3. Do not dispose of wastes into streams or waterways.

D. Provide accident information on the forms provided by Contractor. This information shall be provided on the same Day as the occurrence of said incident.

1.6 SITE SAFETY OFFICER

A. Designate one of Contractor's staff as "Site Safety Officer" whose duties shall include the responsibility for enforcing the environmental protection provisions of the Contract Documents including safety and health, the requirements of the Occupational Safety and Health Act, and other applicable federal, state and local standards. Submit for review by Owner Contractor's intended traffic flow plan, security plan, program for temporary structures, housecleaning plan, demolition program, and environmental safety and health plan. After review by Owner, the implementation and enforcement of these plans shall become the responsibility of the Site Safety Officer. Any changes in the plans shall be requested by Contractor through the Site Safety Officer for written concurrence by Owner.

B. Owner's risk management representative(s) shall be allowed access to accident/injury and illness reports, inspection reports, scheduling and construction meetings, and safety meetings.

1.7 FIRE PROTECTION PLAN

A. Prior to starting any Work at the Site, submit a fire protection plan that has been reviewed and approved by the Rincon Valley Fire Protection District. It is recommended that the plan include, but not be limited to, a discussion of the following items:
   1. Equipment spark arresters
   2. Fire-extinguishing equipment on hand
   3. Method of operation in case of fire
   4. Notification to authorities of any fire
   5. Access available during performance of Work
   6. Educating workers of fire protection plan

7. Storage protection for flammable materials
8. Ventilation and illumination equipment

PART 2 PRODUCTS - NOT USED

PART 3 EXECUTION - NOT USED

END OF SECTION

SECTION 01600

PRODUCT REQUIREMENTS

PART 1 GENERAL

1.1 SECTION INCLUDES

A. Products
B. Product Options and Substitutions
C. Product Delivery Requirements
D. Product Storage and Handling

1.2 PRODUCTS

A. Products: New material, machinery, components, equipment, fixtures, and systems forming the Work. Does not include machinery and equipment used for preparation, fabrication, conveying, and erection of the Work. Products may also include existing materials or components required for reuse.
B. Do not use materials and equipment removed from existing premises, except as specifically permitted by the Contract Documents.
C. For similar components, provide interchangeable components of the same manufacturer.

1.3 PRODUCT OPTIONS AND SUBSTITUTIONS

A. Summary:
   1. This paragraph 1.3 describes procedures for selecting products and requesting substitutions of unlisted materials in lieu of materials named in the Specifications or approved for use in Addenda that were not already the subject of a Document 00660 (Substitution Request Form) submittal as provided in Document 00200 (Instructions to Bidders).
B. For products specified by naming one manufacturer only, Owner believes that the manufacturer listed is capable of producing equipment or products that will satisfy the requirements of the associated Specification. This statement, however, shall not be construed as an endorsement of a particular manufacturer's product, nor shall it be construed that a named manufacturer's standard product will comply with the requirements of the associated Specification. In such cases, the Owner is not aware of an equal manufacturer.
C. Contractor's Options:
   1. For products specified only by reference standard: Select any product meeting that standard.
   2. For products specified by naming one or more products or manufacturers:
      a. Select products of any named manufacturer meeting Specifications.
      b. If product becomes unavailable due to no fault of Contractor or if the product specified no longer complies with local regulations or laws, submit Request for Substitution (RFS), including all information contained in this Section 01600 and a fully executed Document 00660 (Substitution Request Form), but using the term "Contractor" each place the term "Bidder" appears in that form.
D. Substitutions:
   1. Except as provided in Document 00200 (Instructions to Bidders) with respect to "or Approved Equal" items, Owner will consider Contractor's substitution requests only when product becomes unavailable due to no fault of Contractor or if the product

specified no longer complies with local regulations or laws. Requests for review of proposed substitute items will not be accepted from anyone other than Contractor. The RFS shall state the extent, if any, to which the evaluation and acceptance of the proposed substitute will prejudice Contractor's achievement of Substantial Completion on time, and whether or not acceptance of the substitute for use in the Work will require a change in any of the Contract Documents (or in the provisions of any other direct contract with Owner for work on the Project).

2. Submit separate RFS for each product and support each request with:
   a. Product identification.
   b. Manufacturer's literature.
   c. Samples, as applicable.
   d. Name and address of similar projects on which product has been used, and dates of installation.
   e. Name, address, and telephone number of manufacturer's representative or sales engineer.
   f. For construction methods: Detailed description of proposed method; drawings illustrating methods.
3. Where required, itemize a comparison of the proposed substitution with product specified and list significant variations including, but not limited to dimensions, weights, service requirements, and functional differences. If variation from product specified is not pointed out in submittal, variation will be rejected even though submittal was favorably reviewed. Identify all variations of the proposed substitute from that specified in the RFS and indicate available maintenance, repair, and replacement service.
4. State whether the substitute will require a change in any of the Contract Documents (or provisions of any other direct contract with Owner for work on the Project) to adapt the design of the proposed substitute, and whether or not incorporation or use of the substitute in connection with Work is subject to payment of any license fee or royalty. Submit data relating to changes in construction schedule.
5. Include accurate cost data comparing proposed substitution with product and amount of net change in Contract Sum including, but not limited to, an itemized estimate of all costs or credits that will result directly or indirectly from acceptance of such substitute, including costs of redesign and claims of other contractors affected by the resulting change, all of which will be considered by Owner in evaluating the proposed substitute. Owner may require Contractor to furnish additional data about the proposed substitute.
6. Owner will not consider substitutions for acceptance (or, in Owner's sole discretion, Owner may make Contractor solely responsible for all resulting costs, expenses and other consequences) when a substitution:
   a. Results in delay meeting construction Milestones or completion dates.
   b. Is indicated or implied on submittals without formal request from Contractor.
   c. Is requested directly by Subcontractor or supplier.
   d. Acceptance will require substantial revision of Contract Documents.
   e. Disrupts Contractor's job rhythm or ability to perform efficiently.
7. Substitute products shall not be ordered without written acceptance of Owner.
8. Owner will determine acceptability of proposed substitutions and reserve right to reject proposals due to insufficient information.
9. Accepted substitutions will be evidenced by a Change Order or a CCD. All Contract Document requirements apply to Work involving substitutions.

E. Contractor's Representation and Warranty:
   1. Contractor's RFS constitutes a representation and warranty that Contractor:
      a. Has investigated proposed product and determined that it meets or exceeds, in all respects, specified product.
      b. Will provide the same warranty for substitution as for specified product.
      c. Will coordinate installation and make other changes that may be required for Work to be complete in all respects.
      d. Waives claims for additional costs which may subsequently become apparent.
      e. Will compensate Owner for additional redesign costs associated with substitution.
      f. Will be responsible for Construction Schedule slippage due to substitution.
      g. Will be responsible for Construction Schedule delay due to late ordering of available specified products caused by requests for substitution that are subsequently rejected by Owner.
      h. Will compensate Owner for all costs; including extra costs of performing Work under Contract Documents, extra cost to other contractors, and any claims brought against Owner, caused by late requests for substitutions or late ordering of products.
F. Owner's Duties:
   1. Review Contractor's RFS with reasonable promptness.
   2. Notify Contractor in writing of decision to accept or reject requested substitution.
G. Administrative Requirements:
   1. Specified products, materials, or systems for Project may include engineering or on-file standards required by the regulatory agency. Contractor's substitution of products, materials or systems may require additional engineering, testing, reviews, approvals, assurances, or other information for compliance with regulatory agency requirements or both. Provide all agency approvals or other additional information required and pay additional costs for required Owner services made necessary by the substitution at no increase in Contract Sum or Contract Time, and as a part of substitution proposal.

1.4 PRODUCT DELIVERY REQUIREMENTS

A. Deliver products in accordance with manufacturer's instructions.
B. Promptly inspect shipments to assure that products comply with requirements, quantities are correct, and products are undamaged.

1.5 PRODUCT STORAGE AND HANDLING

A. Store products only in staging area per provisions of Section 01100 (Summary).
B. Handle, store, and protect products in accordance with manufacturer's instructions, with seals and labels intact and legible. Store sensitive products in weather-tight, climate-controlled enclosures.
C. For exterior storage of fabricated products, place on appropriate supports, above ground.
D. Cover products subject to deterioration with impervious sheet covering. Provide ventilation to avoid condensation.
E. Store loose granular materials on solid flat surfaces in a well-drained area.
F. Provide equipment and personnel to store products by methods to prevent soiling, disfigurement, or damage.
G. Arrange storage of products to permit access for inspection. Periodically inspect to assure products are undamaged and are maintained under specified conditions.

PART 2 PRODUCTS - NOT USED

PART 3 EXECUTION - NOT USED

END OF SECTION

SECTION 01735

SELECTIVE DEMOLITION, CUTTING, AND PATCHING

PART 1 GENERAL

1.1 SUMMARY

A. Section Includes:
   1. Roof removal, roof sheathing repair, existing HVAC and skylight framing Reinforcements, salvage of existing items to be reused, and other roof preparation aspects.

1.2 REFERENCES

A.	ANSI/ASSE A10.6	Safety Requirements for Demolition Operations
B.	NFPA 241	Safeguarding Construction, Alteration, and Demolition Operations
C.	CPC 1101.11.2.1	California Plumbing Code - Roof Drainage

1.3 DEFINITIONS

A. ABS: Acrylonitrile butadiene styrene - pipe type
B. HDPE: High density polyethylene – pipe type
C. PV: Photovoltaic System

1.4 SUBMITTALS

A. Product Data:
   1. Metal Strapping
   2. Grout
B. Work Plan:
   1. Demolition and Repair Plan:
      a. Proposed Protection Measures: Submit written description and drawings indicating the measures proposed to protect individuals and property exposed during work on Existing HVAC and Skylight Framing Reinforcements and sheathing repairs.
         1) Indicate proposed locations of measures and barriers to protect against falling debris, tools, and other objects. Show time for sheathing repairs, new overflow scupper, mechanical sight screen and any curb changes.
         2) Protect areas within a minimum of 20 feet from affected roof openings and show on a roof plan.
      b. Schedule of selective demolition activities, indicate at minimum the following:
         1) Describe the sequence of all activities, including roof removal, sheathing repairs, existing HVAC and Skylight framing reinforcements; new overflow scupper, mechanical sight screens and any curb changes.
         2) Include starting and ending dates for each activity.
         3) Coordination for shutoff and continuation of utility services.
C. Quality Assurance/Control Submittals:
   1. Qualifications:
      a. Framing personnel license.

Test Reports:
      a. Roof sheathing moisture

D. Closeout Submittals:

1. Landfill Records: Indicate receipt and acceptance of roofing wastes by a landfill facility licensed to accept roofing wastes.
2. Inventory: Submit a list of items that have been removed or salvaged.

1.5 QUALITY ASSURANCE

A. Personnel installing framing shall possess valid California B or C-5 contractor's license.
B. Comply with ANSI/ASSE A10.6 and NFPA 241
C. Comply with PRMD requirements

1.6 DELIVERY, STORAGE, AND HANDLING

A. Storage and Protection:
   1. Store materials per manufacturer requirements.
   2. Do not store materials on roof.
      a. Storage or sale of removed items or materials at Site is not permitted.
B. Items to be salvaged:
   1. Any items that are deemed in good condition and salvageable can be reused, upon Owner approval.
C. Waste Management and Disposal:
   1. Unless otherwise indicated, demolition waste becomes property of Contractor.
   2. Contractor shall be responsible for proper waste disposal.

1.7 PROJECT CONDITIONS

A. Existing Conditions:
   1. The Site is bordered by landscaping and parking.
   2. Maintain a through drive in all parking lots, as deemed reasonable by Owner.
   3. Existing roof is composed of:
      a. 2-ply built up across all
         1) 4-ply in patched areas as indicated
      b. Metal flashings and vents as indicated
   4. Access the roof as indicated.
   5. Roof sheathing is comprised of oriented strand board (OSB)
   6. The building will be occupied. Do not allow aromatic compounds to enter the building.
   7. Temporarily remove weather station if necessary to avoid damage.
   8. Maintain fire-protection facilities in service during selective demolition operations.

1.8 SCHEDULING

A. Owner will occupy the building during demolition and re-roofing.
B. Conduct selective demolition so Owner operations will not be disrupted.
C. See Section 01100 (Summary), paragraph 1.8, for applicable Work time restrictions.

PART 2 PRODUCTS

2.1 MATERIALS

A. Wood for roof sheathing repair:
   1. Replace wood roof deck as needed.
   2. Replace wood roof deck to match existing or Approved Equal:
      a. Existing is APA rated sheathing, 32/16, 5 ply, exposure 1, 15/32" minimum thickness.
      b. Gap sheathing.

3. Nails to match existing:
    a. Edge nail 10d at 4″ on center unless otherwise indicated
    b. Field nail 10d at 12″ on center
        1) All 10d nails shall be shorts (2-1/8″ long)
    c. Provide a double row of edge nailing staggered at all gluelam beams.
    d. Do not overdrive sheathing nails
    e. All sheathing nails shall be a common wire size with a full round head

B. Strapping:
1. Metal straps disturbed by roof sheathing repair or demolition activities shall be replaced in kind.
2. Metal Strapping:
    a. Existing Simpson ties include but are not limited to:
        1) MSTI26
        2) MSTI36
        3) MSTI48
    b. Replace in kind or Approved Equal.

C. Overflow Scupper:
1. Install overflow scupper as indicated
2. Match other existing overflow scupper configuration
3. 3″- ABS or HDPE pipe shall be used
4. Comply with California Plumbing Code
5. Do not connect to storm drain system

D. Grout:
1. Cementitious non-shrink grout
2. Gap span distance of ¾″
3. Adheres to existing concrete
4. Long weathering outdoor type capable of handling sun, rain and temperature extremes

PART 3 EXECUTION

3.1 GENERAL

A. Remove the existing roof waterproofing and prepare the roof substrate for application of the new roof.

3.2 EXAMINATION

A. Site Verification of Conditions:
1. Coordinate the PV removal per Section 13650 (Photovoltaic Collectors).
2. After PV removal allow Owner to inspect the existing surface for conditions and wear.
3. Verify that required utilities have been disconnected and capped before starting Work.
4. Survey existing conditions after existing roof removal and correlate with requirements to determine extent of selective demolition required.

3.3 PREPARATION

A. Protection:
1. Air handling equipment shall be turned off prior to any Work involving adhesives, dust, or other potentially airborne or aromatic substances.
2. Building utilities shall be given protection as needed.
3. Trash shall be collected and placed in the appropriate bins for recycle, reuse, or removal.

4. All Site features, including landscaping, HVAC systems, venting, PV system, and other systems, that might be damaged in the demolition process shall be protected or measures shall be taken to isolate features. Protect areas below exposed roof framing from falling tools, debris, sawdust, or other materials.

3.4 DEMOLITION

A. Remove existing roof system.
B. Remove cant blocks as needed.
C. Site Work:
   1. Follow existing building patterns for roof sheathing repair.
   2. Apply grout to concrete parapet walls as needed to provide a uniform surface to conform roof membrane to.
   3. Apply grout to top of parapet wall in a uniform manner to allow top of wall to drain.
   4. Install overflow scupper through plenum to match existing as indicated.
      a. Coordinate with Owner for plenum access

3.5 REPAIR/RESTORATION

A. Remove and replace rotted roof sheathing areas.
   1. Isolate the underside of the roof, prior to removal, to minimize debris entering the plenum.
   2. After replacement, remove isolation materials
B. The skylight safety guards shall be removed and re-installed.
C. Items removed that were not intended for removal shall be replaced in kind.
D. Grout:
   1. Perform grouting in accordance with the grout manufacturer's directions.
      a. Smooth and retains its shape
      b. Compatible with the roofing membrane
      c. Conform to existing concrete
   2. Grout over wood nailer strip on top of concrete parapet as needed.
E. Install overflow scupper as indicated

3.6 FIELD QUALITY CONTROL

A. Moisture tests shall be performed as needed to determine if items shall be removed or reused.
   1. Moisture test. If sheathing is found to be moist but firm and not diminished in strength a moisture inspection shall be taken to determine further action.
      a. Moisture inspection shall be performed per bowl method or other approved method.
         1) A clear, clean, dry glass bowl shall be placed open side down such that the whole rim touches the surface in question for 20 minutes in the sun. If noticeable condensation forms on the inside of the bowl the wood shall be left to dry 12 hours minimum and tested again the following sunny day. If condensation forms on the second test, the wood shall be replaced with new.
   2. If existing wood sheathing is found to be diminished in strength or of questionable condition it shall be replaced, as directed by Owner.
      a. Meet or exceed existing surrounding type and quality.
B. Manufacturers' Field Services:
   1. Shall be utilized per manufacturer requirements.

3.7 ADJUSTING

A. Any roof substrate adjusting shall be done as deemed necessary and so long as it doesn't affect the structural integrity of the roof.
B. If more serious adjusting is needed the Contractor shall notify the Owner in writing immediately.

3.8 CLEANING

A. Produce a clean roof substrate ready for roofing application.
B. Maintain a clean working environment and leave the Site clean of roofing debris produced as part of this specification.
C. When disturbed, the plenum in the affected area shall be left clean.

3.9 PROTECTION

A. Protect sheathing from exposure to water.
B. Roof shall be able to withstand inclement weather at all times and shall be water tight prior to any potential rain event.

3.10 SCHEDULES

A. Owner will occupy the building during construction.
B. Conduct selective demolition so Owner operations will not be disrupted.

END OF SECTION

SECTION 01740

CLEANING

PART 1 GENERAL

1.1 SUMMARY

A. Section Includes:
   1. Progress Cleaning
   2. Final Cleaning
B. Related Sections:
   1. Section 01500 (Temporary Facilities and Controls)

1.2 PROGRESS CLEANING

A. Perform periodic cleaning to ensure that any streets and other Owner and public properties are maintained free from accumulation of waste materials, dust, mud, and debris.
B. Where required, wet down surfaces to lay dust and prevent the blowing of dust to nearby residences or public properties.
C. Keep all paved roads clean and free of dust, mud, and debris resulting from Contractor's operations. Daily cleanup throughout the job will be necessary as Contractor progresses with its Work, but extra attention to cleanup shall be made prior to weekends and holidays. Without limiting the foregoing, remove trench spoil along traveled ways daily; grade and vacuum broom surfaces initially where applicable and later water flush with high-pressure sprays, being careful to avoid downstream contamination.
D. All dust, mud, spoils, and construction debris shall be removed daily from all roadways, ditches, shoulders, and private property (fills or spoils placed on private property at private property owner's written request excepted).
E. Disposal of Materials:
   1. All waste materials, debris, and rubbish shall be disposed of at sites to be chosen by Contractor in accordance with applicable local, state, and federal regulations.
   2. Contractor is cautioned that the County of Sonoma and cities within the county have regulations governing the disposal of rubble, broken pavement, and similar materials.
   3. Become familiar with the requirements of the agency having jurisdiction over any contemplated disposal site and comply with all such requirements.
F. All excess soil from performance of Work shall be disposed at sites to be chosen by Contractor in accordance with applicable local, state, and federal regulations, and, if applicable, in accordance with Contractor's soil disposal plan. If Contractor elects to dispose of soil on any private property, prior to any such disposal, a letter allowing such disposal shall be obtained from the property owner and presented to Owner. The letter shall state that the property owner has complied with all necessary local, state, and federal laws with respect to disposal on property owner's property. Contractor is advised that the property owner is required to obtain a fill permit from PRMD. Regardless of the location of the disposal area, Contractor shall specify the location in the Storm Water Pollution Prevention Plan (SWPPP) if required under Section 01500 (Temporary Facilities and Controls). Any requirements in the SWPPP that pertain to the area of Work shall also apply to the disposal area. In addition, placement of fill in wetland areas is subject to permit procedures of the US Army Corps of Engineers. At the completion of Work, a letter from

each affected property owner will be required releasing Contractor, Owner, and any Owner consultant from future liability.

G. If Contractor does not properly clean the Site, in the opinion of Owner, then Owner shall have the option of using outside equipment to perform the cleanup and such cost will be withheld from the Contract Sum.

1.3 FINAL CLEANING

A. Execute final cleaning prior to final inspection, using only properly skilled workers.
B. Remove grease, dust, dirt, stains, labels, fingerprints, and other foreign materials from exposed interior and exterior finished surfaces.
C. Repair, patch, and touch up marred surfaces to match adjacent finishes.
D. Clean interior and exterior surfaces exposed to view: remove temporary labels, stains and foreign substances, polish transparent and glossy surfaces, vacuum carpeted and soft surfaces.
E. Clean equipment and fixtures to a sanitary condition, clean or replace filters of mechanical equipment operated during construction, clean ducts, blowers and coils of units operated without filters during construction.
F. Clean Site.
G. Mechanically sweep paved areas.
H. Remove waste and surplus materials, rubbish, and construction facilities from Site.

PART 2 PRODUCTS – NOT USED

PART 3 EXECUTION – NOT USED

END OF SECTION

SECTION 01741

CONSTRUCTION MATERIAL WASTE MANAGEMENT PLAN

PART 1 GENERAL

1.1 CONSTRUCTION MATERIAL WASTE MANAGEMENT PLAN

A. Submit Construction Material Waste Management Plan that includes, but is not limited to:
   1. Management monitoring program that includes, at a minimum, multiple recyclables containers. Goal is to divert 75 percent of materials waste to recycling instead of landfill. This applies only to materials that would typically be disposed via dumpster.
   2. Current recycling program used by each material supplier for materials listed in Divisions 1-16.
   3. Estimate of on-Site material reuse (native fill) in tons.
   4. Completed Self-Certification of Compliance for Contractor and each listed Subcontractor. Self-Certification of Compliance form is included at the end of this Section 01741.

B. Submit monthly progress reports updated with waste management log that includes which material containers have been removed, how many have been removed, and the weight of those containers.

PART 2 PRODUCTS - NOT USED

PART 3 EXECUTION - NOT USED

END OF SECTION

SELF-CERTIFICATION OF COMPLIANCE FORM FOLLOWS THIS SECTION

SELF-CERTIFICATION OF COMPLIANCE WITH CONSTRUCTION MATERIAL WASTE PLAN

Firm Name: _____ Phone: _____

Address: _____

Principal Service or Product: _____

☐ Prime Contractor ☐ Supplier of Material/Service

☐ Subcontractor ☐ Broker

☐ Sole Ownership ☐ Corporation

☐ Partnership ☐ Joint Venture

I, Contractor/Subcontractor, hereby certify that I have read and understood, and agree to adopt and implement, the approved Construction Waste Management Plan for the **404 Aviation Boulevard Roof Replacement.**

Certified by:

Name:_____ Title:_____

Signature:_____ Date:_____

SECTION 01770

CONTRACT CLOSEOUT

PART 1 GENERAL

1.1 SUMMARY

A. Section Includes:
   1. Description of Contract closeout procedures including:
      a. Removal of Temporary Construction Facilities
      b. Substantial Completion
      c. Final Completion
      d. Project Record Documents
      e. Project Guarantee
      f. Warranties
      g. Turn-In
      h. Computer Programs
      i. Release of Claims
      j. Fire Inspection Coordination
      k. Building Inspection Coordination

1.2 REMOVAL OF TEMPORARY CONSTRUCTION FACILITIES

A. Remove temporary materials, equipment, services, and construction prior to Substantial Completion inspection.
B. Clean and repair damage caused by installation or use of temporary facilities.
C. Restore permanent facilities used during construction to specified condition.
D. Comply with paragraph 1.11 of Section 01500 (Temporary Facilities and Controls).

1.3 SUBSTANTIAL COMPLETION

A. When Contractor considers Work or designated portion of the Work as Substantially Complete, submit timely written notice to Owner, with list of items remaining to be completed or corrected.
B. Within reasonable time, Owner will inspect to determine status of completion.
C. Should Owner determine that Work is not Substantially Complete, Owner will promptly notify Contractor in writing, listing all defects and omissions.
D. Remedy deficiencies and send a second written notice of Substantial Completion. Owner will reinspect the Work. If deficiencies previously noted are not corrected on reinspection, then Contractor shall pay the cost of the reinspection.
E. When Owner concurs that Work is Substantially Complete, Owner will issue a Certificate of Substantial Completion, accompanied by Contractor's list of items to be completed or corrected as verified by Owner.
F. Before a Certificate of Substantial Completion will be issued, Contractor must accomplish:
   1. Startup of manufactured units, equipment, and systems that require startup and run for periods prescribed by Owner.
   2. Submittal of Project Record Documents.
   3. Roof membrane manufacturer's warranty and approval of roof system installation.
G. A punch list examination will be performed upon Substantial Completion. One follow-up review of punch list items for each discipline will be provided. If further Site visits are

required to review punch list items due to incompleteness of the Work by Contractor, Contractor shall reimburse Owner for costs associated with these visits.

1.4 FINAL COMPLETION

A. Final Completion occurs when Work meets requirements for Owner's Final Acceptance. When Contractor considers Work is Finally Complete, submit written certification that:
   1. Contractor has inspected Work for compliance with Contract Documents, and all requirements for Final Acceptance have been met.
   2. Except for Contractor maintenance after Final Acceptance, Work has been completed in accordance with Contract Documents and deficiencies listed with Certificate of Substantial Completion have been corrected. Equipment and systems have been tested in the presence of Owner, and are operative.
   3. Work is complete and ready for final inspection.

B. In addition to submittals required by Contract Documents, provide submittals required by governing authorities and submit final statement of accounting giving total adjusted Contract Sum, previous payments, and sum remaining due.

C. When Owner finds Work is acceptable and final closeout submittals are complete, Owner will issue final Change Order reflecting approved adjustments to Contract Sum not previously made by Change Order. Should Owner determine that Work is incomplete or Defective:
   1. Owner promptly will so notify Contractor, in writing, listing the incomplete or Defective items.
   2. Promptly remedy the deficiencies and notify the Owner when it is ready for reinspection.
   3. When Owner determines that the Work is acceptable under the Contract Documents, Owner will request Contractor to make closeout submittals.

D. Final adjustments of accounts:
   1. Submit a final statement of accounting to Owner, showing all adjustments to the Contract Sum and complete and execute Document 00650 (Agreement and Release of Any and All Claims).
   2. If so required, Owner shall prepare a final Change Order for submittal to Contractor, showing adjustments to the Contract Sum that were not previously made into a Contract Modification.

1.5 PROJECT RECORD DOCUMENTS

A. Contract Documents will not be closed out and final payment will not be made until completion and submittal of Project Record Documents described in Section 01780 (Project Record Documents).

1.6 PROJECT GUARANTEE

A. Requirements for Contractor's guarantee of completed Work are included in Article 9 of Document 00700 (General Conditions) and Document 00630 (Guaranty).

B. Neither recordation of Final Acceptance nor final certificate for payment nor provision of the Contract nor partial or entire use or occupancy of premises by Owner shall constitute acceptance of Work not done in accordance with Contract Documents nor relieve Contractor of liability in respect to express warranties or responsibility for faulty materials or workmanship.

C. Owner may make repairs to Defective Work as set forth in Document 00700 (General Conditions), paragraph 9.3.

D. If, after installation, operation, or use of materials or equipment to be provided under Contract proves to be unsatisfactory to Owner, Owner shall have right to operate and use materials or equipment until said materials and equipment can, without damage to Owner, be taken out of service for correction or replacement. Period of use of Defective materials or equipment pending correction or replacement shall in no way decrease guarantee period required for acceptable corrected or replaced items of materials or equipment.
E. Nothing in this Section 01770 shall be construed to limit, relieve, or release Contractor's, Subcontractors', and equipment suppliers' liability to Owner for damages sustained as result of latent defects in equipment caused by negligence of suppliers' agents, employees, or Subcontractors. Stated in another manner, warranty contained in the Contract Documents shall not amount to, nor shall it be deemed to be, waiver by Owner of any rights or remedies (or time limits in which to enforce such rights or remedies) it may have for Defective workmanship or Defective materials under laws of this State pertaining to acts of negligence.

1.7 WARRANTIES

A. Execute Contractor's Submittals and assemble warranty documents and operation and maintenance manuals executed or supplied by Subcontractors, suppliers, and manufacturers.
   1. Provide table of contents and assemble in 8½ inches by 11 inches three-ring binder with durable plastic cover, appropriately separated and organized.
   2. Assemble in Specification Section order.
B. Submit material prior to final Application for Payment.
   1. For equipment put into use with Owner's permission during construction, submit within 14 Days after first operation.
   2. For items of Work delayed materially beyond Date of Substantial Completion, provide updated Submittal within 14 Days after acceptance, listing date of acceptance as start of warranty period.
C. Warranties are intended to protect Owner against failure of Work and against deficient, Defective, and faulty materials and workmanship, regardless of sources.
D. Limitations: Warranties are not intended to cover failures that result from the following:
   1. Unusual or abnormal phenomena of the elements
   2. Vandalism after Substantial Completion
   3. Insurrection or acts of aggression including war
E. Related Damages and Losses: Remove and replace Work which is damaged as result of Defective Work, or which must be removed and replaced to provide access for correction of warranted Work.
F. Warranty Reinstatement: After correction of warranted Work, reinstate Guarantee Period for corrected Work as of the date the corrected Work was done.
G. Replacement Cost: Replace or restore failing warranted items without regard to anticipated useful service lives.
H. Warranty Forms: Submit drafts to Owner for approval prior to execution. Forms shall not detract from or confuse requirements or interpretations of Contract Documents.
   1. Warranty shall be countersigned by manufacturers.
   2. Where specified, warranty shall be countersigned by Subcontractors and installers.
I. Rejection of Warranties: Owner reserves right to reject unsolicited and coincidental product warranties that detract from or confuse requirements or interpretations of Contract Documents.

J. Term of Warranties: For materials, equipment, systems, and workmanship, warranty period shall be as stated in Document 00630 (Guaranty), except where:
   1. Detailed Specifications for certain materials, equipment or systems require longer warranty periods.
   2. Materials, equipment or systems are put into beneficial use of Owner prior to Final Completion as agreed to in writing by Owner.

K. Transfer of Warranties: Any warranty shall automatically transfer, without charge, to a subsequent owner who acquires the Project. Any transfer of the Project shall not extend the duration of any warranty.

L. Warranty of Title: No material, supplies, or equipment for Work under Contract shall be purchased subject to any chattel mortgage, security agreement, or under a conditional sale or other agreement by which an interest therein or any part thereof is retained by seller or supplier. Contractor warrants good title to all material, supplies, and equipment installed or incorporated in Work and agrees upon completion of all Work to deliver premises, together with improvements and appurtenances constructed or placed thereon by Contractor, to Owner free from any claim, liens, security interest, or charges, and further agrees that neither Contractor nor any person, firm, or corporation furnishing any materials or labor for any Work covered by Contract shall have right to lien upon premises or improvement or appurtenances thereon. Nothing contained in this paragraph, however, shall defeat or impair right of persons furnishing materials or labor under bond given by Contractor for their protection or any rights under law permitting persons to look to funds due Contractor in hands of Owner.

1.8 TURN-IN

A. Contract Documents will not be closed out and final payment will not be made until all keys and locks issued to Contractor during prosecution of Work and letters from property owners, if required under paragraph 1.2.F of Section 01740 (Cleaning), are turned in to Owner.

1.9 COMPUTER PROGRAMS

A. When any equipment requires operation by computer programs, submit the program, on appropriate electronic media, plus all user manuals and guides for operating the programs and making changes in the programs for upgrading and expanding the databases. Program shall be Windows 7 compatible. Provide required licenses to Owner at no additional cost.

1.10 RELEASE OF CLAIMS

A. Contract Documents will not be closed out and final payment will not be made until Document 00650 (Agreement and Release of Any and All Claims) is completed and executed by Contractor and Owner.

1.11 FIRE INSPECTION COORDINATION

A. Coordinate fire inspection and secure sufficient notice to Owner to permit convenient scheduling (if applicable).

1.12 BUILDING INSPECTION COORDINATION

A. Coordinate with Owner a final inspection for the purpose of obtaining an occupancy certificate (if applicable).

PART 2 PRODUCTS – NOT USED

PART 3 EXECUTION – NOT USED

END OF SECTION

SECTION 01780

PROJECT RECORD DOCUMENTS

PART 1 GENERAL

1.1 SUMMARY

A. Section Includes:
   1. Administrative and procedural requirements for the following Project Record Documents:
      a. Project Record Drawings and Shop Drawings
      b. Project Record Specifications
      c. Miscellaneous Project Record Submittals
B. Specific Project Record Documents requirements that expand requirements of this Section may be included in the individual Sections of Divisions 2 through 16.

1.2 SUBMITTAL

A. During construction, bring hard-copy updates of the Project Record Drawings (Field Set) to monthly Progress Payment Meetings.
B. At completion of Project, deliver Project Record Documents to Owner. Project Record Documents required include:
   1. Marked-up copies of Drawings (Field Set)
   2. Final Project Record Drawings
   3. Marked-up copies of Specifications
   4. Marked-up copies of Shop Drawings, if applicable
   5. Miscellaneous Project Record Submittals
C. Accompany submittal with transmittal letter containing:
   1. Date
   2. Project title and Owner's Contract number
   3. Contractor's name and address
   4. Number and title of each Project Record Document
   5. Certification that each document as submitted is complete and accurate, and signature of Contractor or Contractor's authorized representative.

1.3 GENERAL

A. Prior to start of construction, Owner will provide one full size set of Drawings and one copy of the Project Manual for Contractor's use for recording as-built conditions.
B. Post changes and Modifications to the Contract Documents as they occur. Do not wait until the end of the Project. Owner will review Project Record Documents on a monthly basis to assure compliance with this requirement.
C. Refer instances of uncertainty to Owner for resolution.
D. Maintenance of Documents:
   1. Store Project Record Documents in the field office apart from Contract Documents used for construction.
   2. Do not permit Project Record Documents to be used for construction purposes.
   3. Maintain Project Record Documents in good order and in a clean, dry, neat, and legible condition.
   4. Make Project Record Documents available at all times for inspection by Owner.

1.4 PROJECT RECORD DRAWINGS AND SHOP DRAWINGS

A. Quality Draftsmanship: Project Record Drawings and Project Record Shop Drawings shall be prepared by competent drafters and shall be clear and fully legible. Owner shall be the sole judge of the acceptability of the Project Record Drawings and Project Record Shop Drawings.

B. Mark-up Procedure: During the construction period, maintain a set of full size prints of Drawings and Shop Drawings for Project Record Documents purposes ("Field Set"). Stamp each document (on each sheet or page) "PROJECT RECORD" in 2-inch high letters. Keep record documents current. Note: A reference by number to a Change Order, CCD, RFI, RFQ, RFP, Field Order or other such document is not acceptable as sufficient record information on any record document. Do not permanently conceal any Work until required information has been recorded.

1. Mark Drawings and Shop Drawings to indicate the actual installation where the installation varies appreciably from the installation shown originally. Give particular attention to information on concealed elements that would be difficult to identify or measure and record later. Items required to be marked include but are not limited to:
   a. Dimensional changes to the Drawings and Shop Drawings
   b. Revisions to details shown on the Drawings and Shop Drawings
   c. Depths of various elements of foundation in relation to main floor level or survey datum
   d. Variable or concealed field conditions
   e. Horizontal and vertical location of underground utilities and appurtenances referenced to permanent surface improvements
   f. Location of internal utilities and appurtenances concealed in construction referenced to visible and accessible features of structure
   g. Locations of underground Work, points of connection with existing utilities, changes in direction, valves, manholes, catch basins, capped stub outs, invert elevations, and similar items
   h. Actual numbering and set points of each electrical circuit
   i. Field changes of dimension and detail
   j. Revisions to routing of piping and conduits
   k. Revisions to electrical circuitry
   l. Actual equipment locations
   m. Duct, conduit, and cable size and routing
   n. Changes made by Change Order or CCD
   o. Details not on original Drawings or Shop Drawings
2. Mark completely and accurately Drawings or Shop Drawings, whichever is the most capable of showing actual physical conditions. Where Shop Drawings are marked, show cross-reference on Drawings location.
3. Mark important additional information that was either shown schematically or omitted from original Drawings.
4. Use revision block to record information related to the mark-ups, including CCD numbers; Alternate numbers, Change Order numbers, and similar identification.
5. Mark Drawing and Shop Drawing sets with red, erasable colored pencil.
6. Responsibility for Mark-up: Where feasible, the individual or entity who obtained Project Record Drawing or Shop Drawing data, whether the individual or entity is the installer, Subcontractor, or similar entity, is required to prepare the mark-up on Project Record Drawings or Shop Drawings.

a. Accurately record information in an understandable and legible drawing technique.
b. Record data as soon as possible after it has been obtained. In the case of concealed installations, record and check the mark-up prior to concealment.

C. Preparation of Project Record Drawings and Project Record Shop Drawings: Immediately prior to inspection for Certification of Substantial Completion, review completed marked-up Project Record Drawings (Field Set) and Project Record Shop Drawings with Owner. When authorized, prepare final Project Record Drawings and Project Record Shop Drawings.
1. Project Record Drawings:
a. Prior to review of Contractor's Application for Payment, the Owner and Contractor will review updates to the Field Set of Project Record Drawings to verify that record documents are current.
b. Upon Certification of Substantial Completion, Contractor shall transfer all updates from the "Field Set" to a clean set of full-size contract drawings furnished by the Owner. Each sheet shall include a Project Record Drawing stamp which is dated and "wet signed" by the Contractor. Submit a full-sized PDF (scan) to Owner.
c. If Contractor chooses and Owner approves in advance, Contractor may submit electronic updates on final Project Record Drawings, so long as final Project Record Drawings preserve the integrity of the data and are compatible with Owner's software.
2. Project Record Shop Drawings:
a. Transfer all information previously marked on Field Set to a separate clean set of Shop Drawings provided by Owner. Erase, redraw, and add details and notations where applicable. Identify and date each Shop Drawing; include the printed designation "PROJECT RECORD SHOP DRAWING" in a prominent location on each Shop Drawing. Bind the set with durable paper cover sheets, with appropriate identification, including titles, dates, and other information on cover sheet.

D. In addition to requirements of this Section, comply with supplemental requirements of Divisions 15.
1. Division 15 of the Specifications may require the preparation of large scale, detailed layout drawings of the Work of that Division. These layout drawings are not Shop Drawings as defined by Section 01420 (References and Definitions), but together with Shop Drawings or layout drawings of all other affected Sections are used to check, coordinate, and integrate the work of the various Sections.
2. Include these layout drawings as part of the Project Record Documents.

1.5 PROJECT RECORD SPECIFICATIONS

A. During the construction period, maintain one copy of the Specifications, including Addenda and Modifications issued, for Project Record Documents purposes.

B. Mark the Project Record Specifications to indicate the actual installation where the installation varies substantially from that indicated in Specifications issued. Note related Project Record Drawing information, where applicable. Give particular attention to substitutions, selection of product options, Change Order and CCD Work, and information on concealed installation that would be difficult to identify or measure and record later.
1. In each Specification Section where products, materials or units of equipment are specified or scheduled, mark the copy with the proprietary name and model number of the product furnished.

2. Record the name of the manufacturer, catalog number, supplier and installer, and other information necessary to provide a record of selections made and to document coordination with Installation, Operation, and Maintenance Manuals.
3. For each principal product specified, indicate whether data has been submitted in Installation, Operation, and Maintenance Manuals.

C. Preparation of Project Record Specifications: Immediately prior to inspection for Certification of Substantial Completion, review completed Field Set Project Record Specifications with Owner. When authorized, prepare final Project Record Specifications.
1. After Substantial Completion and before Final Completion, carefully transfer all data shown on the Field Set to a separate clean set of Specifications provided by Owner. Include the printed designation "PROJECT RECORD SPECIFICATION" in a prominent location on the Specifications.

1.6 MISCELLANEOUS PROJECT RECORD SUBMITTALS

A. Refer to other Specification Sections for miscellaneous record keeping requirements and submittals in connection with various construction activities. Immediately prior to Substantial Completion, complete miscellaneous records and place in good order, properly identified and bound or filed, ready for use and reference. Submit to the Owner for Owner's records. Categories of requirements resulting in miscellaneous records may include, but are not limited to, the following:
1. List all products used in the Project, organized by Specification section and article. Product list shall be submitted in an electronic format, compatible with Microsoft Excel 2013.
2. Delivery records of materials incorporated into the Work
3. Records of product lot numbers and expiration dates
4. Quality Assurance/Quality Control records for field Work

PART 2 PRODUCTS – NOT USED

PART 3 EXECUTION – NOT USED

END OF SECTION

DIVISION 7

THERMAL AND MOISTURE PROTECTION

SECTION 07540

THERMOPLASTIC MEMBRANE ROOFING

PART 1 GENERAL

1.1 SUMMARY

A. Section Includes:
   1. Adhesives and Fasteners
   2. Roof membrane
   3. Walk Pads
   4. Coverboard
   5. Sealants
   6. Insulation
   7. Skylights
   8. Mechanical Screens

B. Related Sections:
   1. Section 07600 (Flashing and Sheetmetal)

1.2 REFERENCES

A.	ANSI/FM 4474	Simulated Wind Uplift Resistance of Roof Assemblies Using Static Positive and/or Negative Differential Pressures
B.	ASTM C1371	Emittance of Materials Near Room Temperature Using Portable Emissometers
C.	ASTM C1549	Solar Reflectance Near Ambient Temperature Using a Portable Solar Reflectometer
D.	ASTM C473	Physical Testing of Gypsum Panel Products
E.	ASTM D3273	Resistance to Growth of Mold on the Surface of Interior Coatings in an Environmental Chamber
F.	ASTM D3389	Coated Fabrics Abrasion Resistance (Rotary Platform Abrader)
G.	ASTM D6754	Standard Specification for Ketone Ethylene Ester Based sheet
H.	ASTM D751	Standard Test Methods for Coated Fabrics
I.	ASTM E108	Fire Test of Roof Coverings
J.	ASTM E1918	Measuring Solar Reflectance of Horizontal and Low-Sloped Sources in the Field
K.	ASTM E1980	Solar Reflectance Index of Horizontal and Low-Sloped Opaque Surfaces
L.	ASTM E408	Normal Emittance of Surfaces Using Inspection-Meter Techniques
M.	ASTM E84	Surface Burning Characteristics of Building Materials
N.	ASTM E903	Solar Absorptance, Reflectance, Transmittance of Materials using Integrating Spheres
O.	ASTM G152	Environmental, Weathering, and Water Exposure Testing, Carbon Arc
P.	ASTM G154	Standard Practice for Operating Fluorescent Light Apparatus for UV Exposure of Nonmetallic Materials
Q.	ASTM G155	Standard Practice for Operating Xenon Arc Light Exposure of Non-Metallic Materials

R.	ASTM G21	Resistance of Synthetic Polymeric Materials to Fungi
S.	FM 4470	Factory Mutual Approval Standard for Single-Ply, Polymer-Modified Bitumen Sheet, Built-Up Roof (BUR), and Liquid-Applied Roof Assemblies for Use in Class 1 and Noncombustible Roof Deck Construction.
T.	UL 1897	Uplift Resistance of Roof Assemblies
U.	UL 580	Uplift Resistance of Roof Assemblies
V.	UL 723	Burning Characteristics of Building Materials
W.	UL 790	Fire Tests of Roof Coverings

1.3 DEFINITIONS

A. Roof system: all the parts that make up the complete roof, including but not limited to:
   1. Roof membrane
   2. Coverboard
   3. Insulation
   4. Flashings, trim, copings accessories
   5. Skylights
   6. Adhesives, sealants, mechanical fasteners
   7. Vents
   8. Walkpads

B. Roof membrane: the main waterproofing layer in the roof system.

C. UV: Ultraviolet

1.4 SYSTEM DESCRIPTION

A. Performance Requirements:
   1. Installed roof system shall withstand specified uplift pressures, thermally induced movement, and exposure to weather without failure due to defective manufacture, fabrication, installation or other defects in construction. Roofing system shall remain watertight.
   2. Provide roofing materials that are compatible with one another under conditions of service and application required, as demonstrated by membrane roofing manufacturer based on testing and field experience.

1.5 SUBMITTALS

A. Product data:
   1. Adhesives and fasteners
   2. Roof membrane
   3. Walk pads
   4. Coverboard
   5. Sealants
   6. Insulation
   7. Mechanical screens

B. Shop Drawings:
   1. Proposed profile details that differ from those indicated.
   2. Coverboard: indicate adhesive type and patterns for specified wind up lift.
   3. Roof screen footings stamped by registered California professional Civil Engineer.
      a. Determine quantity of stanchions per each roof screen brace based on stanchion manufacturer's load rating for unit.

4. Membrane terminations.
5. Crickets, saddles, tapered edge strips.

C. Samples:
1. 12″x12″ section of membrane.
2. 4′ long by nominal width loose laid roof walk pad.

D. Quality Assurance/Control Submittals:
1. Certificates:
   a. Certification from the membrane manufacturer that the following roof system components are compatible when in direct contact with roof membrane:
      1) Walk pad
         (a) Loose laid
         (b) Fully adhered
      2) Coverboard
      3) Dow Blue Styrofoam
      4) Rubber conduit supports
      5) Pitch pocket/multiple penetration design
      6) Membrane perimeter edge termination system
      7) Adhesives
      8) Fasteners
2. Manufacturer's Instructions:
   a. Material storage requirements
   b. Roofing system installation
3. Manufacturer's Field Reports:
   a. Field installation report results
   b. Weld tests
4. Daily Work Plans:
   a. Indicate daily plans for stocking the roof, with weights and locations of anticipated loads, including schedule, pattern of installation, and how much roof area will be exposed at any time to the elements.

1.6 QUALITY ASSURANCE

A. Certifications:
1. Verification from the membrane manufacturer that the proposed roofing system meets the requirements for the manufacturer's warranty.

B. Field Samples:
1. Membrane edge termination assembly:
   a. At top of parapet
   b. At transition area from side of parapet to top of parapet

C. Mock-Ups:
1. Multiple roof penetrations.

1.7 DELIVERY, STORAGE, AND HANDLING

A. Packing, Shipping, Handling, and Unloading:
1. Deliver materials to the Site in the original, unopened containers or packaging bearing the product name or description, manufacturers name and address, manufacturing location, production date or date code and name of approved testing agency.
2. Bulk items shall be accompanied with the same information issued as a certificate or on a bill of lading by the manufacturer.

B. Storage and Protection:
   1. Store materials in accordance with the storage requirements from the manufacturer.
   2. Handle all materials to prevent damage.
      a. The Contractor is responsible for all materials safety.

1.8 PROJECT CONDITIONS

A. Existing Conditions:
   1. Building will be occupied during construction.
   2. Utility Service: Maintain existing underground utilities to remain in service and protect them against damage during roofing operations.
B. Weather Limitations: proceed with installation only when existing and forecasted weather conditions permit roofing system to be installed according to manufacturer's written instructions and warranty requirements.

1.9 WARRANTY

A. Special Warranty:
   1. Manufacturer's standard or customized form, without monetary limitation, in which manufacturer agrees to repair or replace components of roofing system that fail in materials or workmanship within 30 years from date of Substantial Completion.

PART 2 PRODUCTS

2.1 MANUFACTURERS

A. Roof Membrane:
   1. KEE Type
      a. Seaman Corporation; Fibertite
   2. Hypalon Type
      a. Burke Industries; Burkeline Roofing Systems
   3. Or Approved Equal
C. Coverboard:
   1. Georgia-Pacific Gypsum
   2. USG Securock
   3. Or Approved Equal
D. Insulation:
   1. Seaman "FTR value",
   2. Atlas roofing "ACFoam II or III"
   3. Johns Manville R-Panel
   4. Or Approved Equal
E. Flashings: Per Section 07600 (Flashings and Sheet Metal.)

2.2 MATERIALS

A. All roofing shall meet the following requirements:
   1. FM approved roof system meeting Class A roofing classification.
      a. Fire/Windstorm Classification: Class 1A-90.
   2. Roof system compliant with ASTM E108 or UL 790 Class A roof.
   3. Roof system shall meet testing requirements of FM 4474 or UL 580 or UL 1897.
   4. Thermal Movements: Provide roofing system that allows for thermal movements from ambient and surface temperature changes.

a. Temperature Change (Range): 20 deg. F to 120 deg. F, ambient; 20 deg. F to 180 deg. F, material surfaces.

5. The roof system shall handle ponded water, be fully adhered, have an emissivity/reflectivity index at or above stated in paragraph 2.2A.3, 30 year life cycle expectancy, and is compatible in direct contact with Dow Blue Styrofoam.

B. Roof Membrane, KEE Type:
1. Ketone ethelyne ester based sheet roofing membrane.
   a. ASTM D6754
2. 60 mil thickness
3. Membrane Performance Requirements:
   a. Exceed weathering tests ASTM G152, ASTM G155 or ASTM G154.
   b. Exceed material requirements for tensile strength for unreinforced membranes or breaking strength for reinforced membranes when tested per CBC chapter 15 requirements, ASTM D751
   c. Resist impact damage on the results of tests conducted in accordance with FM 4470 for the "Resistance to Foot Traffic Test" in section 5.5 for FM 4470.
   d. Resist 1,700 or more cycles without failure per abrasion test ASTM D3389, H-18 wheel, 1,000 gram load.
   e. Flame spread index of 75 or less and smoke index of 450 or less per ASTM E84.
   f. Compatible in direct contact or system shall be made compatible with Dow Blue Styrofoam in contact with top surface.
   g. Per ASTM G21 no fungi growth or discoloration at 28 days.
   h. Initial Solar Reflectance Index not less than 79% when calculated according to ASTM E903 or 83% when calculated according to ASTM E1918 or 0.82 when calculated according to ASTM C1549 based on testing identical products by a qualified testing agency.
   i. 3 year aged Solar Reflectance Index not less than 78% when calculated according to ASTM C1549 based on testing identical products by a qualified testing agency.
   j. Solar Reflective Index of not less than 98 per ASTM E1980.
   k. Initial Solar Emmittance Index not less than 95% when calculated according to ASTM E408 or 85% when calculated according to ASTM C1371 based on testing identical products by a qualified testing agency.
   l. 3 year aged Solar Emmittance Index not less than 81% when calculated according to ASTM C 1371 based on testing identical products by a qualified testing agency.
   m. Listed on Department of Energy's ENERGY STAR, Qualified Products List for lowslope roof products.
   n. Withstand ponded water without voiding warranty.

C. Roof Membrane: Hypalon Type:
1. Chlorosulfonated polyethylene based sheet roofing membrane.
2. 45mil thickness
3. White
4. Membrane Performance Requirements:
   a. Exceed weathering tests ASTM G152, ASTM G 155 or ASTM G154.
   b. Exceed material requirements for tensile strength for unreinforced membranes or breaking strength for reinforced membranes when tested per CBC chapter 15 requirements, ASTM D751.
   c. Compatible in direct contact, or system shall be made compatible, with Dow Blue Styrofoam in contact with top surface.

d. Flame spread index of 75 or less and smoke index of 450 or less per ASTM E84.
e. Per ASTM G21 no fungi growth or discoloration at 28 days.
f. Withstand ponded water without voiding warranty.
g. Listed on DOE's ENERGY STAR, Qualified Products List for lowslope roof products.
h. Solar Reflective Index of not less than 98 per ASTM E1980.
i. Initial Solar Emmittance Index not less than 95% when calculated according to ASTM E408 or 85% when calculated according to ASTM C1371, based on testing identical products by a qualified testing agency.
j. 3 year aged Solar Emmittance Index not less than 81% when calculated according to ASTM C 1371 based on testing identical products by a qualified testing agency.

D. Insulation:
1. Preformed roof insulation boards manufactured by roofing manufacturer, selected from manufacturer's standard sizes suitable for application, of thickness indicated.
2. Rigid foam plastic insulation with type and/or thickness combining for total minimum R value of 5.
3. Compatible thickness combination up to 1".
4. Fire retardation, at max intended use thickness, shall comply with ASTM E84 or UL 723 flame spread index of 75 or less and smoke developed index of 450 or less.
5. Provide preformed saddles, crickets, tapered edge strips, and other insulation shapes as needed to slope to drain.
6. Provide insulation accessories recommended by insulation manufacturer for intended use and compatibility with roof system.
   a. Joint tape: 6 or 8 inch wide, coated, glass-fiber reinforced.

E. Coverboard:
1. Meet ASTM C473.
2. Impact-resistant nonstructural fiberglass faced and backed gypsum panels
3. ¼" minimum thickness
4. Moisture and mold resistant
5. Complies with ASTM D3273 for mold resistance.
6. Fire resistance per ASTM E84:
   a. Flame spread: 0
   b. Smoke developed: 0
7. Factory primed

F. Walk Pad:
1. Compatible with roofing membrane.
2. Slip resistant, UV stabilized and able to resist wind uplift up to 90 mph.
3. Loose-lay placed as indicated:
   a. Open grid design with cross directional top ribs
   b. Compatible with membrane- PVC or TPO type material
   c. Three feet wide, 1/2 inch height; minimum
   d. Light grey or white color
   e. Slip and wear resistant
4. Heat-weld as indicated:
   a. Slip resistant
   b. 0.09 inch nominal thickness minimum
   c. Puncture resistance to 850 pounds
   d. Heat weldable to roof membrane material
   e. 27 inch width minimum

G. Termination bar:
   1. Corrosion- resistant extruded 6000 series T5 aluminum with mill type finish
   2. Bars shall be pre-punched with slotted holes measuring 0.28″ by 0.38″ at 7.8″ centers
   3. Bar shall be 0.125″ thick by 1″ wide
   4. Shall not be used in exposed conditions; cover with a counter flashing per drawing detail.
H. Fasteners:
   1. Termination Bar Fastener
      a. Spacing and size per termination bar.
      b. Concrete anchor with holding capacity to comply with roof requirements.
   2. Membrane termination at curbs shall be fastened with:
      a. Galvanized annular ring shank nails, or as per membrane manufacturer requirements.
      b. Spacing per membrane manufacturer.
I. Sealants:
   1. Compatible with materials being sealed.
   2. Per roof membrane manufacturer
J. Adhesives:
   1. Compatible with materials being joined.
   2. Per roof membrane manufacturer.

2.3 MANUFACTURED UNITS

A. Roof screen footing:
   1. Tubular stanchion with welded base and threaded top.
      a. Compatible with roof membrane
      b. Maximum 6 inches tall

2.4 ACCESSORIES

A. Provide accessories to create a complete roof system.
B. Overflow drains: Extension shall be pipe coupling to fit type and size of existing.

PART 3 EXECUTION

3.1 EXAMINATION

A. Site Verification of Conditions:
   1. Application of the roofing system constitutes Contractor's certification that they have inspected and found the substrate to be suitable for the installation of the roofing system
   2. Perform Work only within the temperature and moisture boundaries required by the manufacturer(s) of the material(s) in use.

3.2 PREPARATION

A. Surface Preparation:
   1. Clean concrete parapet prior to cutting reglet.
B. Material Sizing:
   1. Size skylight: measure in the field for curb dimensions

3.3 INSTALLATION

A. Membrane shall be fastened and sealed to copings, counter flashing and other clad metal and metal Work. See Section 07600 (Flashing and Sheetmetal).

B. If salvaged, materials to be re-installed:
   1. Skylight safety guards
C. Walk Pads:
   1. Heat weld in place as indicated
   2. Loose lay as needed

3.4 CONSTRUCTION

A. Drain overflow:
   1. Extend all drain overflows to be flush with the surrounding roof.
   2. Extend roof membrane into drain and seal edges.
B. Site Tolerances:
   1. The concrete pad at the main heater unit shall be overlaid with cover board and roofing membrane.
C. Roof Screen:
   1. Place stanchions on top of the existing 4′ by 6′ wood footing
      a. Follow manufacturer's requirements for attachment
D. Sealants:
   1. Apply at the rate required to maintain load requirements per product manufacturer.
E. Adhesives:
   1. Apply at the rate required to maintain load requirements per product manufacturer.

3.5 FIELD QUALITY CONTROL

A. Contractor shall ensure that Manufacturer visits Site and inspects Work in progress as frequently as necessary and at appropriate points during installation progress to ensure compliance with installation instructions and final integrity of roofing system for final warranty certification. This shall include, at a minimum four Site visits during construction:
   1. After PV removal at start of construction
   2. At or before 50% of roof membrane installation
   3. At roof completion but prior to PV installation
   4. After PV installation or by Substantial Completion

3.6 CLEANING

A. All debris shall be placed in the appropriate containers for removal from Site.
B. Finished roof membrane shall be free from any roofing construction debris.
   1. This includes roof system dust generated as part of the installation.
C. No drains shall be unblocked prior to a complete clean up.

END OF SECTION

SECTION 07600

FLASHING AND SHEET METAL

PART 1 GENERAL

1.1 SUMMARY

A. Section Includes:
   1. Parapet coping, roof penetration, curb and other flashings, trim and accessories.

1.2 REFERENCES

A.	ASTM A153/A153M	Zinc Coating on Iron and Steel Hardware
B.	ASTM F2329	Zinc Coating, Hot Dip, Requirements for Application to Carbon and Alloy Steel Bolts, Screws, Washers, Nuts, and Special Threaded Fasteners
C.	ASTM C920	Elastomeric Joint Sealants
D.	ASTM C1311	Solvent Release Sealants
E.	ASTM B209	Aluminum and Aluminum Alloy Sheet and Plate
F.	ASTM A653	Steel Sheet, Zinc Coated (Galvanized) or Zinc-Iron Alloy Coated (Galvannealed) by the Hot-Dip Process
G.	ASTM A666	Annealed or Cold-Worked Austenitic Stainless Steel Sheet, Strip, Plate, and Flat Bar

1.3 DEFINITIONS

A. Exposed locations: exterior locations where surface, object or other is exposed to external weathering characteristics; sun, rain, hail, frost, fog, organic and other substances.

B. Concealed locations: an exterior location that is partially covered or protected from external weathering characteristics.

1.4 SUBMITTALS

A. Product Data:
   1. Membrane clad flashing
   2. Non-reinforced membrane flashing
   3. Counter flashing
   4. Parapet coping
   5. Sheet flashing
   6. Trim and accessories
   7. Vent screens, exhaust fan domes
   8. Pipe stands
B. Shop Drawings:
   1. Show fabrication and installation layouts of flashing and trim, including plans, elevations, expansion-joint locations, and keyed details. Distinguish between shop and field-assembled Work. Include the following:
      a. Identification of material, thickness, weight, and finish for each item and location.
      b. Details for forming flashing and trim, including profiles, shapes, seams, and dimensions.

c. Details for joining, supporting, and securing flashing and trim, including layout of fasteners, cleats, clips, and other attachments. Include pattern of seams.
d. Details of edge conditions, parapet, ridges, curbs, roof penetration, counter flashings as applicable.
e. Pitch pan and multiple pipe penetration flashing assembly.
f. Details at roof screen footings.

C. Samples:
1. Membrane clad flashing, 12″ x 12″
2. Parapet coping, 12″ length.
3. Sheet flashing finish color options.

1.5 QUALITY ASSURANCE

A. Requirements:
1. Parapet Coping Standard:
a. Comply with SMACNA's "Architectural Sheet Metal Manual" unless more stringent requirements are specified per manufacturer.
2. Thermal Movements: Provide flashing that allows for thermal movements from ambient and surface temperature changes.
a. Temperature Change (Range): 20 deg. F to 120 deg. F, ambient; 20 deg. F to 180 deg. F, material surfaces.

B. Field Samples:
1. Parapet edge termination.
2. Flashing at heater mechanical pad.

C. Mock-Ups:
1. Multiple pipe penetration flashing assembly.
2. Transition from parapet to false wall, at the building entrance.
3. Transition from side of parapet wall to top of parapet wall.

1.6 DELIVERY, STORAGE, AND HANDLING

A. Packing, Shipping, Handling, and Unloading:
1. Handle and unload products with care.
2. Deliver materials to the Site in the original, unopened containers or packaging bearing the product name or description, manufacturers name and address, manufacturing location, production date code and, if applicable, name of approved testing agency.

B. Storage and Protection:
1. Store materials in accordance with the storage requirements from the manufacturer.
2. Handle all materials to prevent damage.
a. The Contractor is responsible for all materials safety.

PART 2 PRODUCTS

2.1 MATERIALS

A. Flashings:
1. Non-reinforced membrane flashing:
a. Matches chemical properties of main roof membrane.
b. 60 mil thickness.

2. Membrane clad flashing shall be either:
   a. 24 gauge hot dipped G-90 steel, laminated with a 20 mil polymeric coating compatible with roof membrane.
   b. 0.04 inch thick 3003H14 aluminum, laminated with a 20 mil polymeric coating compatible with roof membrane.
3. Counter flashing:
   a. Galvanized metal: Commercial grade galvanized steel meeting ASTM A653, Coating Designation G-90 minimum, 26 gage.
   b. Stainless steel; Type 304 alloy, meeting ASTM A666, 0.02" thick, 2B finish.
4. Concrete Reglet:
   a. Aluminum: Shop fabricated shape, 3003-H14 alloy, meeting ASTM B209, 0.025" thick.
5. Sheet flashing:
   a. Galvanized metal: Commercial grade galvanized steel meeting ASTM A653, Coating Designation G-90 minimum, 26 gage.
   b. Paint coating to match existing heater color.
   c. Fastener sealant to create a waterproof surface.
6. Parapet Coping:
   a. Metallic coated sheet steel: restricted flatness steel sheet, metallic coated by the hot dip process and prepainted by the Coil-Coating Process for exterior exposed building products.
7. Flashing Receivers: Fabricate from the following materials:
   a. Galvanized Steel: 0.022 inch thick.
8. Pitch Pan:
   a. Per roof membrane manufacturer recommendation.
   b. Sealant:
      1) Per roof membrane manufacturer recommendation.

B. Miscellaneous Materials:
1. General: Provide materials and types of fasteners, protective coatings, separators, sealants, and other miscellaneous items as required for complete parapet termination and trim installation and recommended by manufacturer of roof membrane.
2. Adhesive: as recommended by the manufacturer of the materials being joined.
3. Pipe stands:
   a. Rubber or composite based, compatible with roof membrane.
   b. Secure attachments for conduit fasteners.
   c. Designed to allow water to flow around or through.
   d. Sized appropriate for loading.
4. Vents/Exhaust Fan:
   a. Provide similar, equal in quality, sizing, and finish to existing.
5. Fasteners: Wood screws, concrete bolts, annular threaded nails, self-tapping screws, self-locking rivets and bolts, and other suitable fasteners designed to withstand design loads and recommended by manufacturer of roof membrane.
   a. General: Blind fasteners or self-drilling screws, gasketed, with washer head.
      1) Exposed Fasteners: Washers with soft water barrier material compatible with materials being fastened.
      2) Blind Fasteners: High-strength aluminum or stainless-steel rivets suitable for metal being fastened.

b. Fasteners for counter flashing at curb:
   1) Sheet-metal-wood screws
   2) Neoprene, EPDM, or other compatible material backed washers
c. Fasteners for Zinc-Coated (Galvanized) Steel Sheet: Hot-dip galvanized steel according to ASTM A153/A153M or ASTM F2329 or Series 300 stainless steel.

6. Sealant Tape: Pressure-sensitive, 100 percent solids, gray polyisobutylene compound sealant tape with release-paper backing. Provide permanently elastic, non-sag, nontoxic, non-staining tape 1/2 inch wide and 1/8 inch thick.
7. Elastomeric Sealant (Exposed Locations): ASTM C920, elastomeric polyurethane polymer sealant; low modulus; of type, grade, class, and use classifications required to seal joints in sheet metal flashing and trim and remain watertight.
8. Butyl Sealant (Concealed Locations): ASTM C1311, single-component, solvent-release butyl rubber sealant; polyisobutylene plasticized; heavy bodied for hooked-type expansion joints with limited movement.

C. Manufactured flashing and trim:
1. Injection molded vent stack and inside and outside corner flashing using roof membrane.
   a. At all corners pre-formed membrane units shall be used.
   b. At all vent stacks pre-formed membrane units shall be used.
   c. Pre-molded industrial grade flashings shall be used at all curbs, curb corners, pipe penetrations, and as needed.
   d. All pre-molded flashings shall be compatible with roofing membrane and produced by the roofing membrane manufacturer if available or applicable.

PART 3 EXECUTION

3.1 GENERAL

A. Flashing shall be installed in such a manner so as to prevent moisture entering the wall and roof through joints in flashings, through moisture-permeable materials and at intersections with parapet walls and other penetrations through the roof plane.
B. Flashing shall be installed at wall and roof intersections, wherever there is a change in roof slope or direction and around roof openings.
C. All roof penetrations shall be flashed.
D. Parapet walls shall be properly flashed with non-combustible, weatherproof materials.
E. Any roof adjusting deemed necessary shall be brought to the Owner's attention prior to action.

3.2 EXAMINATION

A. Site Verification of Conditions:
1. Examine substrates, areas, and conditions, to verify actual locations, dimensions and other conditions affecting performance of the Work.
   a. Verify compliance with requirements for installation.
   b. Verify that substrate is sound, dry, smooth, clean, sloped for drainage, and securely anchored.
   c. Proceed with installation only after unsatisfactory conditions have been corrected.

3.3 PREPARATION

A. Protection:
   1. Provide protection for new built roof to reduce potential punctures.
   2. For Work that is performed on new roof surface, portable walking mats shall be laid down over the roof surface to protect against premature wear.
   3. Portable walking mats shall be compatible with roofing surface.
   4. Pneumatic rubber tires shall be used on roof material transport equipment.

3.4 CONSTRUCTION

A. General:
   1. Anchor flashing and trim and other components of the Work securely in place, with provisions for thermal and structural movement. Use fasteners, protective coatings, separators, sealants, and other miscellaneous items as required to complete flashing and trim system.
   2. Install flashing and trim true to line and levels indicated. Provide uniform, neat seams with minimum exposure of sealant.
   3. Install flashing and trim to fit substrates and to result in watertight performance. Verify shapes and dimensions of surfaces to be covered before fabricating flashings.
   4. Install exposed sheet metal flashing and trim without excessive oil canning, buckling, and tool marks.
   5. Install sealant tape as needed.
   6. Torch cutting of sheet metal flashing and trim is not permitted.

B. Metal Protection:
   1. Metal Protection: Where dissimilar metals will contact each other or corrosive substrates, protect against galvanic action by painting contact surfaces with bituminous coating or by other permanent separation as recommended by SMACNA.
   2. Coat back side of sheet metal flashing and trim with sealant or adhesive where flashing and trim will contact wood, ferrous metal, or cementitious construction.

C. Expansion:
   1. Provide for thermal expansion of exposed flashing and trim. Space movement joints at a maximum of 10 feet with no joints allowed within 24 inches of corner or intersection. Where lapped expansion provisions cannot be used or would not be sufficiently watertight, form expansion joints of intermeshing hooked flanges, not less than 1 inch deep, filled with sealant concealed within joints.

D. Seal joints as indicated and as required for watertight construction.
   1. Where sealant-filled joints are used, embed hooked flanges of joint members not less than 1 inch into sealant. Form joints to completely conceal sealant. When ambient temperature at time of installation is moderate, between 40 and 70 degrees F, set joint members for 50 percent movement each way. Adjust setting proportionately for installation at higher ambient temperatures. Do not install sealant-type joints at temperatures below 40 degrees F.

E. Flashing is required at all roof penetrations and perimeters to properly seal the edges of the roofing system, unless otherwise specified by the manufacturer of the roofing membrane.
   1. Counter flashing and other metal Work, shall be fastened to prevent metal from pulling free or buckling and sealed to prevent moisture from entering the roofing system or building.

F. Counterflashing:

1. Coordinate installation of counterflashing with installation of base flashing. Insert counterflashing in reglets or receivers and fit tightly to base flashing. Extend counterflashing 4 inches over base flashing. Lap counterflashing joints a minimum of 4 inches and bed with sealant. Secure in a waterproof manner by means of interlocking folded seam or blind rivets and sealant.

G. Parapet edge:
1. A termination shall be made at the parapet to act as a finishing flashing for the edge termination as indicated.
2. Counterflashing reglet shall be attached to the parapet as indicated in a saw cut.
3. Counterflashing reglet shall be adhered into the sawcut in the concrete parapet wall ½" minimum, 1" maximum, and extend out to form a weather resistant barrier over the parapet termination.
4. Grout the parapet top to drain where not used for termination.
5. Use clad metal and weld to membrane when termination bar is applied to the top or in a vertical position on the parapet.
6. Use counter flashing when on parapet side in a horizontal application.

H. Roof-Penetration Flashing:
1. Coordinate installation of roof-penetration flashing with installation of roofing and other items penetrating roof. Seal with elastomeric sealant and clamp flashing to pipes that penetrate roof.
2. Medium sized vents not on curbs shall be one of the following:
   a. Be placed on curbs, as indicated, and flashed accordingly.
   b. Be flashed per membrane manufacturer detail.

I. All HVAC units shall be raised and flashed as indicated.
1. All mechanical units too large to lift or those that are deemed not practical to lift shall be counter flashed.

3.5 CLEANING

A. Clean off excess adhesives and sealants. Remove temporary protective coverings and strippable film as flashing and trim are installed.

END OF SECTION

DIVISION 8

DOORS AND WINDOWS

SECTION 08625

LIGHT TUBES

PART 1 GENERAL

1.1 SUMMARY

A. Section Includes:
   1. Light tubes, consisting of roof dome, reflective tube, and diffuser assembly.

1.2 REFERENCES

A. ASTM D635	Standard Test Method for Rate of Burning and/or Extent and Time of Burning of Plastics in a Horizontal Position
B. ASTM D1929	Standard Test Method for Determining Ignition Temperature of Plastics
C. ASTM E84	Standard Test Method for Surface Burning Characteristics of Burning Materials
D. ASTM E283	Test Method for Rate of Air Leakage Through Exterior Windows, Curtain Walls, and Doors Under Specified Pressure Differences Across the Specimen
E. ASTM E330	Structural Performance of Exterior Windows, Curtain Walls and Doors
F. ASTM E547	Test Method for Water Penetration of Exterior Windows, Skylights, Doors and Curtain walls by Cyclic Air Pressure Difference
G. ICBO/ICC AC-16	Acceptance Criteria for Plastic Skylights

1.3 SUBMITTALS

A. Product Data:
   1. Light tube
B. Shop Drawings:
   1. Light tube, including layout, profiles and product components, including anchorage, flashings and accessories.
C. Quality Assurance/Control Submittals:
   1. Test Reports:
      a. Independent testing agency or evaluation service reports verifying compliance with specified performance requirements.
   2. Manufacturer's Instructions:
      a. Light tube:
         1) Preparation and installation
         2) Storage and handling requirements and recommendations

1.4 PERFORMANCE REQUIREMENTS

A. Completed light tube assemblies shall be capable of meeting the following performance requirements:
   1. Air Infiltration Test: Air infiltration will not exceed 0.30 cfm/sf aperture with a pressure delta of 1.57 psf across the tube when tested in accordance with ASTM E283.
   2. Water Resistance Test: No uncontrolled water leakage at 10.5 psf pressure differential with water rate of 5 gallons/hour/sf when tested in accordance with ASTM E547.

3. Uniform Load Test:
   a. All units shall be tested with a safety factor of 3 for positive pressure and 2 for negative pressure, acting normal to plane of roof in accordance with ASTM E330.
4. Fire Testing:
   a. When used with the dome edge protection band, all domes shall meet fire rating requirements as described in the International Building Code.
   b. Self-Ignition Temperature - Greater than 650 degrees F per: UBC 26-6. See ASTM D1929.
   c. Smoke Density - Rating no greater than 450 Per UBC 8-1. See ASTM E84, in way intended for use. Classification C.
   d. Rate of Burn and/or Extent - Maximum Burning Rate: 2.5 inches/min Classification CC-2. UBC 26-7. See ASTM D635.
   e. Rate of Burn and/or Extent - Maximum Burn Extent: 1 inch Classification CC-1: UBC 26-7. See ASTM D635.
   f. Roof dome must have visible light transmission of at least 92% and UV Light Transmission of 0.03% or less.

1.5 DELIVERY, STORAGE, AND HANDLING

A. Store products in manufacturer's unopened packaging until ready for installation.
B. Store and dispose of solvent-based materials, and materials used with solvent-based materials, in accordance with requirements of local authorities having jurisdiction.

1.6 PROJECT CONDITIONS

A. Maintain environmental conditions (temperature, humidity, and ventilation) within limits recommended by manufacturer for optimum results. Do not install products under environmental conditions outside manufacturer's absolute limits.

1.7 WARRANTY

A. Manufacturer's standard 10 year warranty, covering manufacturer’s product defects.

PART 2 PRODUCTS

2.1 MANUFACTURERS

A. Solatube
B. Velux
C. Or Approved Equal

2.2 LIGHT TUBE

A. General: Transparent roof-mounted skylight dome and self-flashing curb, reflective tube, and ceiling level diffuser assembly, transferring sunlight to interior spaces; complying with ICBO/ICC AC-16.

2.3 ACCESSORIES

A. Fasteners: Same material as metals being fastened, non-magnetic steel, non-corrosive metal of type recommended by manufacturer, or injection molded nylon.
B. Suspension Wire: Steel, annealed, galvanized finish, size and type for application and ceiling system requirement.
C. Sealant: Polyurethane or copolymer based elastomeric sealant as provided or recommended by manufacturer.

PART 3 EXECUTION

3.1 EXAMINATION

A. Do not begin installation until substrates have been properly prepared.

3.2 PREPARATION

A. Clean surfaces thoroughly prior to installation.
B. Prepare surfaces using the methods recommended by the manufacturer for achieving the best result for the substrate under the project conditions.

3.3 INSTALLATION

A. Install in accordance with manufacturer's printed instructions.
B. After installation of first unit, field test to determine adequacy of installation. Conduct water test in presence of Owner. Correct if needed before proceeding with installation of subsequent units.

3.4 PROTECTION

A. Protect installed products until completion of Project.
B. Touch-up, repair, or replace damaged products before Substantial Completion.

END OF SECTION

DIVISION 13

SPECIAL CONSTRUCTION

SECTION 13650

PHOTOVOLTAIC COLLECTORS

PART 1 GENERAL

1.1 SUMMARY

A. Section Includes:
   1. Test, uninstall, and remove photovoltaic system (PV) from roof.
   2. Store PV for duration of re-roofing.
   3. Re-install, clean, test, and balance PV.

1.2 REFERENCES

A. ASCE 7	Minimum Design Loads for Buildings and Other Structures
B. ASTM C518	Standard Test Method for Steady-State Thermal Transmission Properties by Means of the Heat Flow Meter Apparatus
C. ASTM C578	Standard Test Method for Steady-State Thermal Transmission Properties by Means of the Heat Flow Meter Apparatus
D. ASTM D1622	Standard Test Method for Apparent Density of Rigid Cellular Plastics
E. Title 24 California Code of Regulations	California Building Standards Code
F. UL Standard 1703	Fire Ratings - Standard for Flat-Plate Photovoltaic (PV) Modules and Panels

1.3 DEFINITIONS

A. PV: Photovoltaic System.
B. PV Tile: Existing Photovoltaic panels, which are mounted with metal bracket on an attached mortar board. DOW Blue Styrofoam fixed in a tongue and groove application, also referred to as a LightGuard tile.
C. PVUSA: Photovoltaics for Utility System Applications Test Conditions.
D. NEC: National Electric Code

1.4 SUBMITTALS

A. Product Data:
   1. If new panels are required to replace damaged or poorly performing panels, identify supplier, provide cut sheet and performance details and warranty on new replacement PV tiles.
   2. Existing PV Manufacturer's specifications and other data required to demonstrate conformance with manufacturer's recommendations for warranty compliance:
      a. PV Manufacturer's written recommendation on removal and storage of panels.
      b. Results of pre-removal PV test.
      c. Results of all re-installation testing.

B. PV Removal and Replacement Plan:
   a. Submit engineering calculations by a CA licensed civil or structural engineer to justify capacity of existing roof framing at temporary staging, travel, and storage areas under concentrated moving loads from any proposed moving carts.
   b. If PV Tiles are temporarily stored on the roof during the new roof installation, the calculations shall demonstrate capacity of roof framing at temporary storage areas.
   c. Provide a PV Removal and Replacement Plan that conforms to the PV Manufacturer's recommendations and includes:
   d. Detailed written description of panel removal, storage, transport and re-installation of PV tiles, including labeling and identification protocols for cable connections.
   e. Location of temporary staging area(s) for the PV on roof.
   f. Procedures and equipment for site security, storage, and safe handling of PV Tiles to prevent any damage to the new roof surface.
   g. Description of system diagnostics plan to test photovoltaic panel configuration before removal and after re-installation, including procedures for testing the individual photovoltaic panels prior to removal.

C. Closeout Submittals:
   1. Product data for replacement DC cables.
   2. System diagnostics showing the PV array is balanced and functioning properly.
   3. PV panel layout drawing showing serial numbers of panels.
   4. If the reinstalled PV configuration deviates from the pre-project installation, Contractor shall furnish applicable detailed drawings with the Project Record Drawings, including:
      a. Roof plans, section, and elevation details
      b. As-built roof plan, showing horizontal alignment of final placement of all panels, connections, and conduit placement.
   5. Operations and Maintenance Manual:
      a. New PV panel and warranty (if required)
      b. DC disconnect cables product data
      c. Pre-removal and reinstallation testing reports

1.5 PROJECT CONDITIONS

A. Existing Conditions:
   1. Existing PV is a proprietary PowerGuard system, consisting of an array of photovoltaic panels, each mounted on a mortar-coated polystyrene tile, wind-deflection curbing installed at the perimeter of the array, terminal and combiner boxes, quick-connect electrical connectors, DC wiring, DC disconnect, grid-connected inverter, AC disconnect, data acquisition and monitoring system (DAS), MET station, and isolation transformer.
      a. PV cells mounted on LightGuard tiles are Sanyo Photovoltaic, model number HIP-190 CA9 (190W).
      b. Note: LightGuard tiles are UL listed with a Class B fire rating, and UL has affirmed that if Class B LightGuard tiles are placed on a Class A roof, the roof retains its Class A rating.
   2. DC and AC disconnects are located in the inverter room on the west side of the building.
   3. Owner's building electrical system connects to PG&E's transformer through a 1200 ampere breaker. The building also has a 20kVA uninterruptible power supply system that provides power back up to the critical data load. A portable emergency generator connects to a breaker panel box via a manual transfer switch when normal utility power fails.

1.6 QUALITY ASSURANCE

A. Prior to removal, conduct a pre-removal PV test. Test shall include:
   1. Electrical string checks to insure conformance with manufacturer's specifications
   2. Megger tests
   3. Inverter check
   4. DC amperage check
   5. Individual photovoltaic panel voltage
   6. Photovoltaic panel serial number

1.7 WARRANTIES

A. Work on the PV shall conform with existing photovoltaic manufacturer's recommendations in order to preserve the manufacturer's warranty on the PV Tiles.
B. Provide the same warranty on replacement PV Tiles as the manufacturer's warranty on the existing PV Tiles.
C. Replace exposed quick-connect wiring. New wiring shall be warranted against UV degradation for a period of 20 years.

PART 2 PRODUCTS

2.1 MATERIALS

A. System and components: if required, match existing. Information about existing PV is included at the end of this Section.
B. Boxes, Enclosures, panelboards:
   1. Circuit breakers and switches are UL listed. Disconnects and overcurrent devices are mounted in existing boxes, enclosures, or panelboards. Requirements for internal configuration on these enclosures comply with applicable NEC Articles and to applicable UL standards in effect at the time of installation. Metal enclosures and boxes are bonded to grounding conductor.
C. DC Cables:
   1. External wires, cables, wire covers, and other non-metallic components are exposed to the weather and sun Replacement cable shall be UV stable, water-resistant, flexible, and UL labelled.
   2. Cables damaged during removal shall be replaced as needed matching existing unless deemed incorrect for that application in which case they shall be replaced to fit application.
   3. Cables, cable ends or appurtenances shall be replaced by Contractor at Contractor's expense.

PART 3 EXECUTION

3.1 GENERAL

A. Photovoltaic modules, attached mortar-coated polystyrene tile, wind deflection curbing, DC quick disconnect wiring and DC fuses, and all other appurtenances up to the terminal boxes shall be removed, stored and re-installed as part of this Work.
   1. The conduit and combiner boxes shall be left in place.
   2. The existing weather station shall be left in place.
B. Store PV Tiles in storage area indicated unless otherwise approved.

3.2 REMOVAL

A. De-energize and properly lock out PV system prior to starting work.
B. Locate each PV array horizontally. Confirm that locations and placement of the arrays are consistent with Drawings. Make necessary adjustments to the Drawings and notify the Owner.
C. Remove wind guard-curb covers and corners, any ballast components, eyebolt strapping, curb pan and strapping anchors. Disconnect PV upon removal and label cables to match up to each panel.
D. Record, label, and document each panel location prior to removal in accordance with the PV Removal and Replacement Plan.

3.3 RE-INSTALLATION

A. Record, label, and document each panel location after reinstallation in accordance with the Work Plan.
B. Condition of Surfaces: Inspect all surfaces of roof to receive work. Report any discrepancies or unsatisfactory conditions to Owner. Starting work by Contractor implies acceptance of surface conditions.
C. Work that takes place on the roof must be carefully monitored to assure the roof system is not damaged in any way that might void the roof membrane warranty.
D. Patch penetrations through the membrane before reinstalling photovoltaic panels.
E. Prevent any possible penetration of the new roofing surface.
F. Contractor shall replace, or repair if damage is deemed minor by Owner, all PV Tiles that are broken in removal and re-installation process.
G. Locate the PV Tile arrays in their original positions.
H. Check and test each PV Tile in accordance with the Work Plan and Pre-removal PV Test.
I. Install PV Tile.
J. Following the placement of each PV Tile, attach and label the electrical quick-connects between the PV Tiles.
K. If any of the steps above require modification to the re-installed PV System, repeat steps 3.3A through 3.3I.
L. Following A through J provide wire ties to secure support wires from PV tile to DC combiner boxes.
M. Install curb pan, strapping anchors, and eyebolt with cables.
N. Adjust the eyebolt nut, securing pan snug to PV.
O. Attach cover and corners to pan.
P. Maintain a single point, negative ground throughout the PV.

3.4 REINSTALLATION TESTING AND START-UP

A. Visually inspect entire electrical installation prior to startup for loose wires. Remove any debris.
B. Randomly verify torque specifications of bolted connections.
C. Verify mounting is secure.
D. Clean PV panels/
E. Re-install fuses; replace damaged fuses.
F. Test each string in the PV array for open circuit voltage and current. Take readings under clear and stable sky conditions.

1. Open circuit voltage at each string must be within 3% of average string voltage at same irradiance and temperature levels.
2. Operating current at each string shall be within 5% of the average string current at same irradiance and temperature levels.
3. Record PV model number, voltage current, irradiance, and temperature level in Excel spreadsheet.

G. Verify system grounding.
H. Verify voltage and polarities at main DC disconnect (open) and main AC disconnect (open).
I. Start-up inverter and verify proper operation of PV system with building load by conducting an IV Curve Trace. Adjust accordingly.
J. Infrared scan the PV tiles for hot spots.

END OF SECTION

INFORMATION ABOUT EXISTING PV FOLLOWS THIS SECTION

EXISTING PV SPECIFICATIONS

A. Photovoltaic:

1. Sanyo Photovoltaic module, model number HIP-190 CA9 (190W) with the following electrical characteristics:

Max Power	Watts	190
Max Voltage	Volts	54.8
Max Current	Amps	3.47
Open Circuit Voltage	Volts	67.5
Short Circuit Current	Amps	3.75
Warranted Min Power	Watts	171
Max System Voltage	Volts	600
Series Fuse	Amps	15
PTC rating	Watts	177.5
Length	Inches	52
Width	Inches	35
Weight (mortar-covered styrofoam ballast board and PV module)	Pounds	60

Standard Test conditions (STC): Air Mass 1.5, Irradiance = 1000W/m2. Cell temperature = 25Deg C

The values in the above table are nominal.

PTC stands for PVUSA Test Conditions. PTC watt rating is based on 1000W/m2 solar irradiance, 20 deg C temperature and 1m/s wind speed. The PTC watt rating is lower than the STC

a. UL listed 1703. A UL Listed photovoltaic module is an integrated component of the PowerGuard PV.

B. LightGuard Tile:

1. Each photovoltaic panel is mounted on a LightGuard tile manufactured by T. Clear Corporation. The panel consists of tongue and groove edges that inter-lock when applied on the roof.
2. The existing LightGuard roof tiles have the following physical properties:
   a. Tile weight of less than 6 lb/sq ft
   b. R-Value of R-10 or greater (ASTM C 518)
   c. Wind Uplift Resistance of 85 mpg. (ASCE 7)
   d. Made of Extruded Polystyrene, Type 6 (ASTM C 578), Density of 1.9 lb/ cu ft (ASTM D 1622), Thermal Conductivity of 0.2 Btu-in/hr-sq ft- degree F (ASTM C 518)
   e. DowBlue Styrofoam
   f. Water Absorption (%max) at 0.1% (ASTM D 272)

WATER AGENCY ADMINISTRATIVE FACILITIES AT 404 AVIATION BOULEVARD

404 AVIATION BOULEVARD ROOF REPLACEMENT

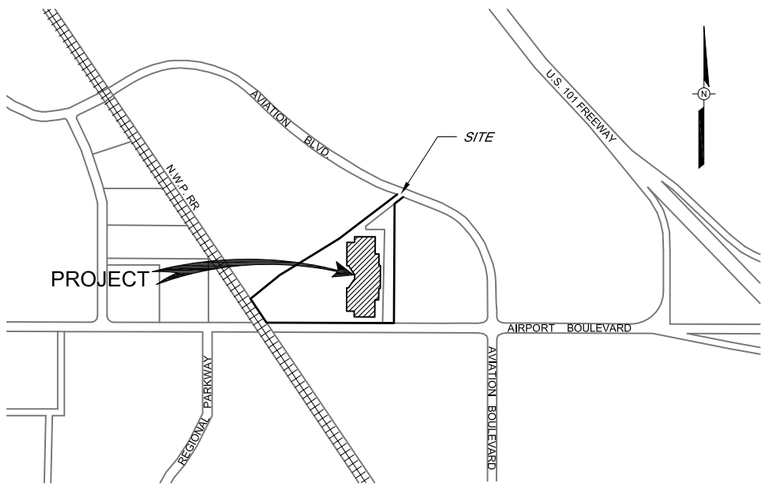

VICINITY MAP

SCALE: 1" = 400'

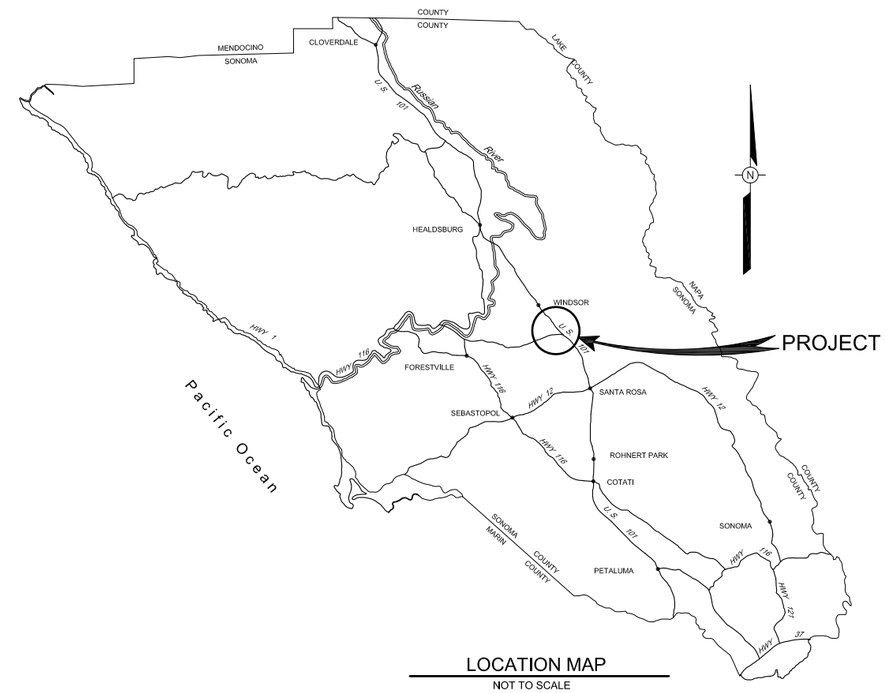

LOCATION MAP

NOT TO SCALE

INDEX TO DRAWINGS

SHEET NUMBER	SHEET TITLE	SHEET DESCRIPTION
1	G-1	LOCATION MAP, VICINITY MAP, AND INDEX TO DRAWINGS
2	G-2	ABBREVIATIONS, SYMBOLS, AND NOTES
3	C-1	SITE PLAN
4	C-2	EXISTING ROOF PLAN WITH SOLAR PANELS
5	C-3	ROOF REPLACEMENT PLAN
6	D-1	DETAILS
7	D-2	DETAILS
8	D-3	DETAILS
9	R-1	ARRAY LAYOUT POWERGUARD SYSTEM
10	R-2	STRING WIRING PLAN POWERGUARD SYSTEM
11	R-3	GENERAL DETAILS SHEET 1

BAR LENGTH ON ORIGINAL DRAWING EQUALS ONE INCH. ADJUST SCALE ACCORDINGLY

REGISTERED PROFESSIONAL ENGINEER
KENT A. GYLA
No. 51532
CIVIL
STATE OF CALIFORNIA

NO.	DATE	REVISION	BY

SONOMA COUNTY WATER AGENCY

SCALE: SHOWN
DATE: 02/10/15
DRAWN: SMP
REVIEWED:

404 AVIATION BOULEVARD ROOF REPLACEMENT

LOCATION MAP, VICINITY MAP, AND INDEX TO DRAWINGS

FILE NAME: 7616ReBid_Gen.dwg
CONTRACT NUMBER: 0-80-7#1A
DRAWING NUMBER: G-1
SHEET 1 OF 11

\\sd-data\proj\general\all facilities\office-sites\Airport\7616_roofreplacement\7616_roof_rebid\7616ReBid_Gen

ABBREVIATIONS

ACP	ASBESTOS CONCRETE PIPE
AFF	ABOVE FINISH FLOOR
BD	BOARD
℄	CENTERLINE
CG	CHLORINE GAS
CI	CURB INLET
CMP	CORRUGATED METAL PIPE
CO	CLEANOUT
COL	COLUMN
CONC	CONCRETE
CONT	CONTINUOUS
CS	CHLORINE SOLUTION
CV	CHECK VALVE
CW	COLD WATER
DI	DROP INLET
DIA	DIAMETER
DOC	DOCUMENT
EA	EACH
EL	ELEVATION
ELEC	ELECTRICAL
E/P	EDGE PAVEMENT
EX	EXISTING
EQUIV	EQUIVALENT
FH	FIRE HYDRANT
FL	FLOWLINE
FM	FORCE MAIN
F.O.	FACE OF
GA	GAUGE
GYP	GYPSUM
GYP BD	GYPSUM BOARD
HDPE	HIGH DENSITY POLYETHYLENE
HVAC	HEATING, VENTILATION, & AIR CONDITIONING
HW	HOT WATER
HWH	HOT WATER HEATER
INV	INVERT
MH	MANHOLE
MIN	MINIMUM
MFG	MANUFACTURER
MFS	MODULAR FURNITURE SYSTEM
PLYWD	PLYWOOD
PV	PHOTOVOLTAIC
PW	POTABLE WATER
OC	ON CENTER
OL	OCCUPANCY LEVEL
RD	ROOF DRAIN
RECPT	RECEPTACLE
REINF	REINFORCEMENT
REQ'D	REQUIRED
RW	RECYCLED WATER
RWR	RECYCLED WATER RETURN
SD	STORM DRAIN
SDMH	STORM DRAIN MANHOLE
SMP	STREAM MAINTENANCE PROGRAM
SS	SANITARY SEWER
SSMH	SANITARY SEWER MANHOLE
TS	TUBE STEEL
TYP	TYPICAL
VWD	VENT/WASTE/DRAIN
W/	WITH
WV	WATER VALVE

SITE PLAN LEGEND

LINES

CONDENSATE

ELECTRIC — E —

PARAPET WALL

ROOF RIDGE

ROOF SCREEN

WALK PAD

4 PLY

PROTECT

SHARED RIGHT OF WAY

STORAGE AREAS

SYMBOLS

HVAC UNIT

SKYLIGHT

EX ROOF PENETRATION - SMALL

EX ROOF PENETRATION - MEDIUM

EX ROOF PENETRATION - LARGE

ROOF PENETRATION FLASHING - SMALL

ROOF PENETRATION FLASHING - MEDIUM

ROOF PENETRATION FLASHING - LARGE

ROOF SLOPE

ROOF DRAIN ASSEMBLY

TYPICAL SECTION LETTERING AND DETAIL NUMBERING SYSTEM

SECTION LETTER

SECTION AND DETAIL CALLOUTS ON DRAWING NO. C-12 REFERENCED TO DRAWING NO. M-5:

A / M–5

DRAWING NO. WHERE IT APPEARS

DETAIL NUMBER

1 / M–5

DRAWING NO. WHERE DETAIL APPEARS

SECTION AND DETAIL TO BE FOUND ON SAME DRAWING AS CALLOUT:

A / –

1 / –

ON DRAWING NO. M-5 THIS DETAIL TITLE IS SHOWN AS:

DETAIL 1 / C–12

DETAIL NUMBER

DRAWING NO. WHERE DETAIL CALLOUT APPEARS (BACK REFERENCE OR VARIES)

ON DRAWING NO. M-5 THIS SECTION TITLE IS SHOWN AS:

SECTION A / C–12

SECTION LETTER

DRAWING NO. WHERE SECTION CUT APPEARS (BACK REFERENCE)

BAR LENGTH ON ORIGINAL DRAWING EQUALS ONE INCH. ADJUST SCALE ACCORDINGLY

REGISTERED PROFESSIONAL ENGINEER KENT A. GYLA No. 51532 CIVIL STATE OF CALIFORNIA

NO.	DATE	REVISION	BY

SONOMA COUNTY WATER AGENCY

SCALE: SHOWN | DATE: 02/10/15

DRAWN: SMP

REVIEWED:

404 AVIATION BOULEVARD ROOF REPLACEMENT

ABBREVIATIONS, SYMBOLS, AND NOTES

FILE NAME: 7616ReBid_Gen.dwg

CONTRACT NUMBER: 0-80-7#1A

DRAWING NUMBER: G-2

SHEET 2 OF 11

\\sd-data\proj\general\all facilities\office-sites\Airport\7616_roofreplacement\7616_roof_rebid\7616ReBid_Gen

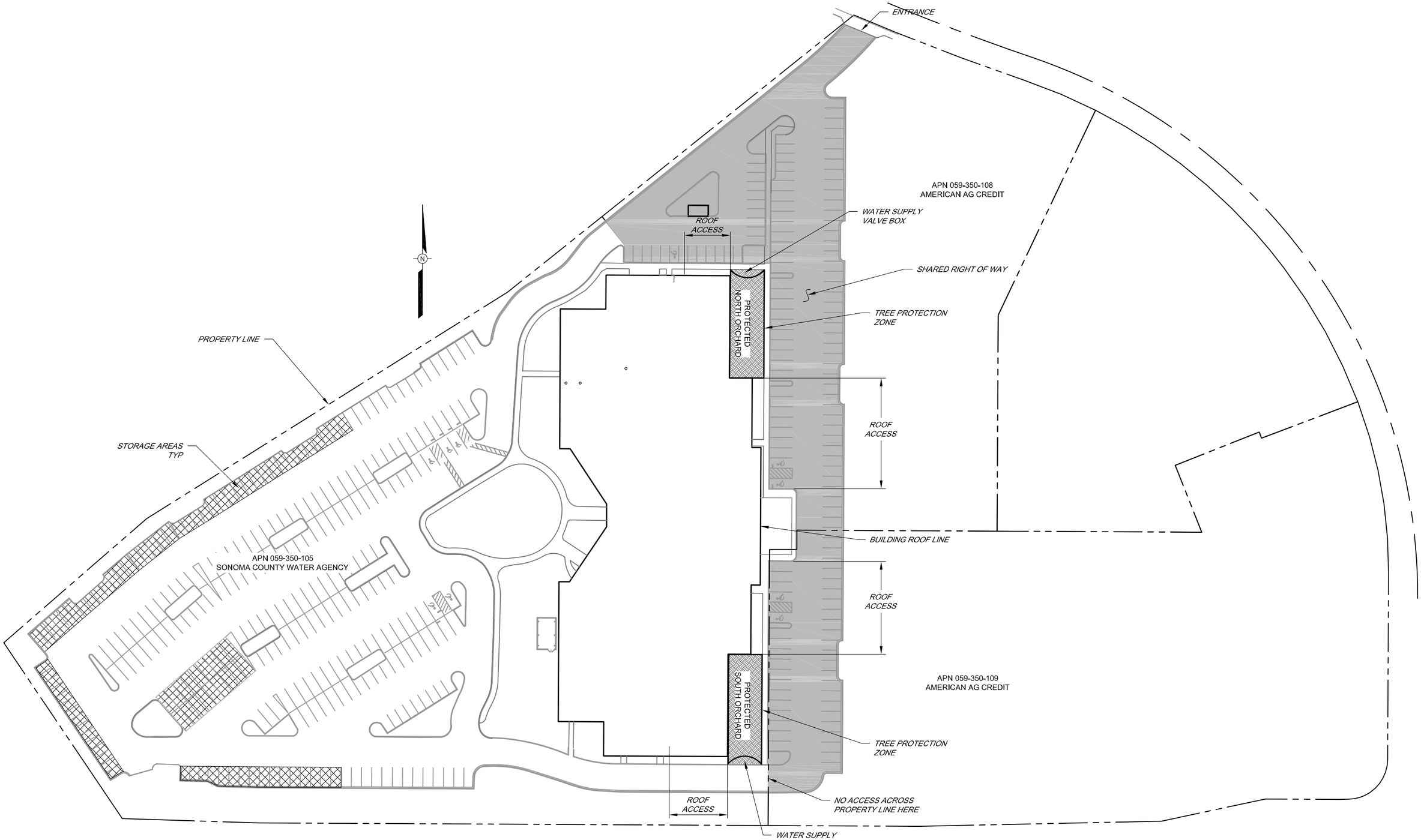

PLAN

SCALE: 1" = 40'

BAR LENGTH ON ORIGINAL DRAWING EQUALS ONE INCH. ADJUST SCALE ACCORDINGLY

REGISTERED PROFESSIONAL ENGINEER
KENT A. GYLA
No. 51532
CIVIL
STATE OF CALIFORNIA

NO.	DATE	REVISION	BY

SONOMA COUNTY WATER AGENCY

SCALE: SHOWN
DATE: 02/10/15
DRAWN: SMP
REVIEWED:

404 AVIATION BOULEVARD ROOF REPLACEMENT

SITE PLAN

FILE NAME: 7616ReBid_RoofPlan.dwg
CONTRACT NUMBER: 0-80-7#1A

DRAWING NUMBER: C-1

SHEET 3 OF 11

\\sd-data\proj\general\all facilities\office-sites\Airport\7616_roofreplacement\7616_roof_rebid\7616ReBid_RoofPlan

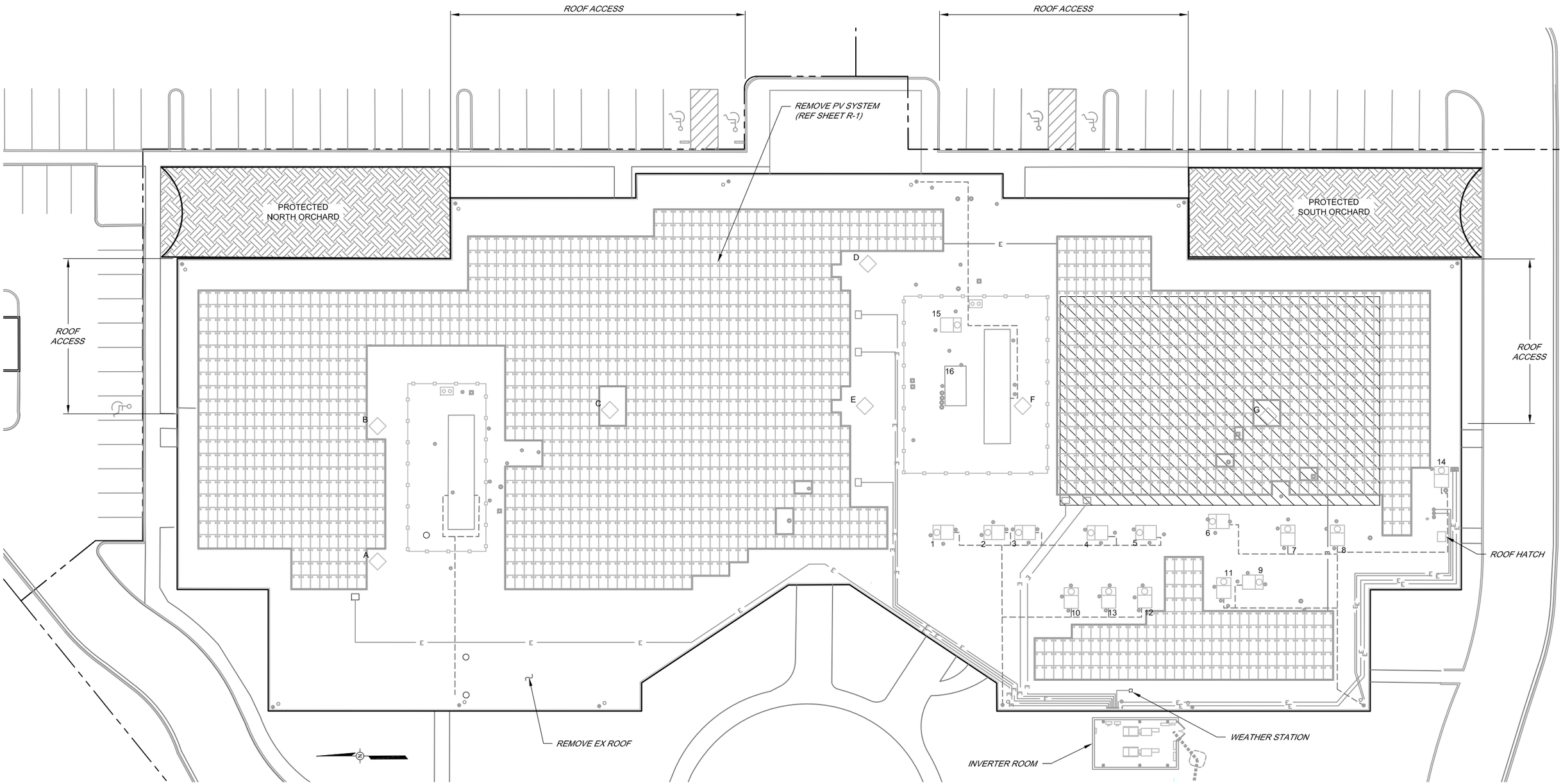

PLAN

SCALE: 1/16" = 1'-0"

BAR LENGTH ON ORIGINAL DRAWING EQUALS ONE INCH. ADJUST SCALE ACCORDINGLY

REGISTERED PROFESSIONAL ENGINEER
SUENETTE A. HAYES
No. 17078
ELECTRICAL
STATE OF CALIFORNIA

REGISTERED PROFESSIONAL ENGINEER
KENT A. GYLLA
No. 51532
CIVIL
STATE OF CALIFORNIA

NO.	DATE	REVISION	BY

SONOMA COUNTY WATER AGENCY

SCALE: SHOWN
DATE: 02/10/15
DRAWN: SMP
REVIEWED:

404 AVIATION BOULEVARD ROOF REPLACEMENT

EXISTING ROOF PLAN WITH SOLAR PANELS

FILE NAME: 7616ReBid_RoofPlan.dwg
CONTRACT NUMBER: 0-80-7#1A

DRAWING NUMBER: C-2

SHEET 4 OF 11

\\sd-data\proj\general\all Facilities\office-sites\Airport\7616_roofreplacement\7616_roof_rebid\7616ReBid_RoofPlan

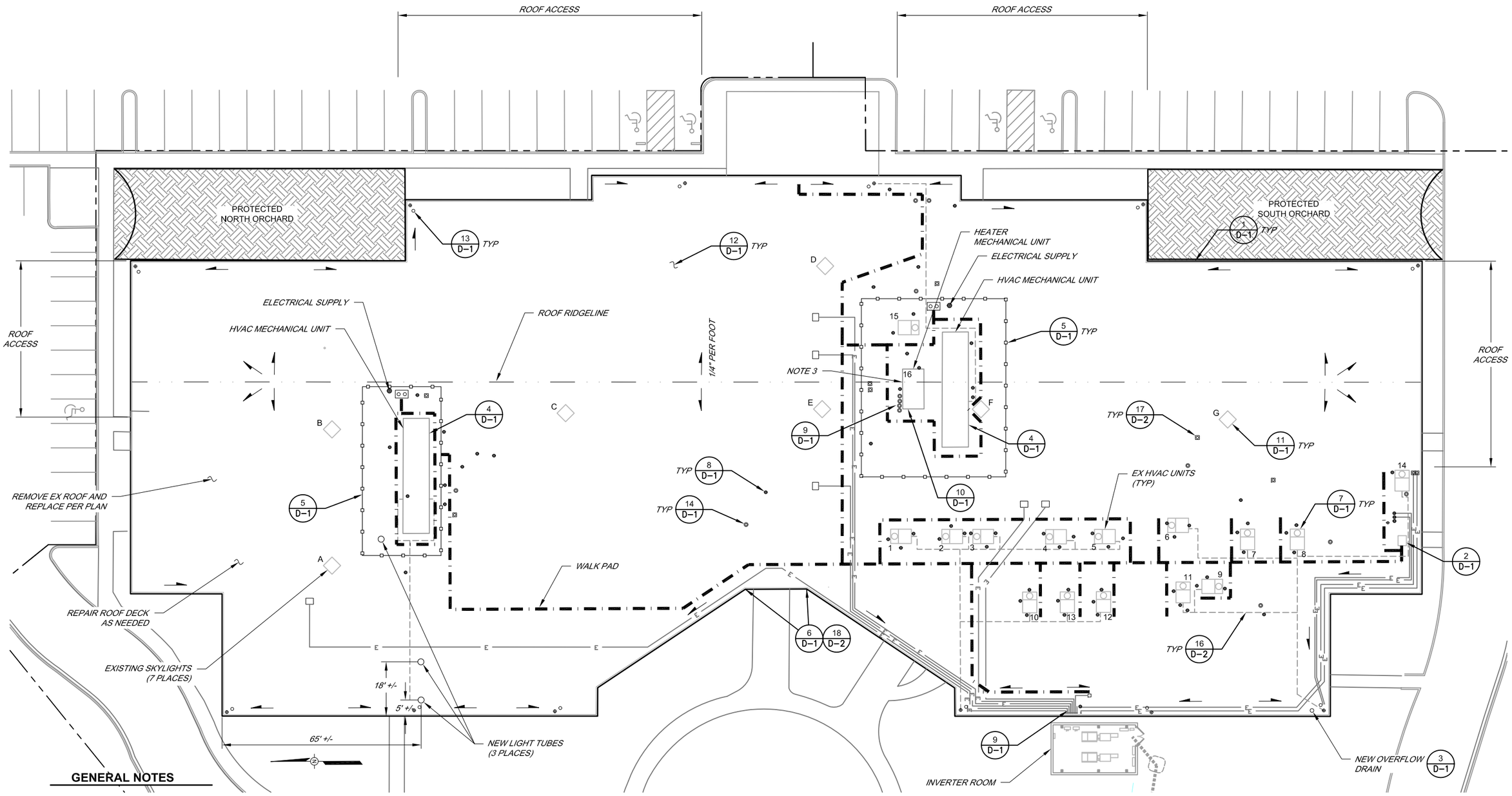

PLAN

SCALE: 1/16" = 1'-0"

GENERAL NOTES

1. LOOSE LAID WALKPAD SHALL BE PLACED AS NEEDED.
2. INSTALL FRAMING REINFORCEMENTS PER DETAILS 18 AND 19 AT HVAC UNITS 1-15 AND EXISTING SKYLIGHTS PRIOR TO NEW ROOF PLACEMENT. REMOVE AND REPLACE ROOF SHEETING AS NECESSARY TO EXPOSE EXISTING FRAMING. REMOVE FULL SHEETS OR PROVIDE BLOCKING AT EDGES OF CUT. PROTECT AREAS BELOW FROM FALLING DEBRIS, SAWDUST, TOOLS, ETC.
3. REMOVE EXISTING HVAC UNIT 16 (RAYPAK, 2000 LBS TOTAL) AND PLACE NEW OWNER PROVIDED HVAC UNIT 16 (RAYPACK MODEL H9-1532BE, 2000 LBS TOTAL) PRIOR TO NEW ROOF INSTALLATION.
4. COPPER DRAIN LINES ON HVAC UNITS 1-15 WILL BE REPLACED BY THE OWNER AFTER THE ROOF IS COMPLETED AND MAY BE LEFT DISCONNECTED.
5. INSTALL NEW LIGHT TUBES SO THAT THEY FALL WITHIN CEILING TILES. DIMENSIONS APPROXIMATE. ADJUST LOCATION IN FIELD TO AVOID EXISTING FRAMING MEMBERS, LIGHT FIXTURES, ETC.

APPROXIMATE HVAC UNIT WEIGHTS

UNITS	1-13	470 - 520 LBS
UNIT	14	310 - 360 LBS
UNIT	15	560 - 620 LBS

BAR LENGTH ON ORIGINAL DRAWING EQUALS ONE INCH. ADJUST SCALE ACCORDINGLY

REGISTERED PROFESSIONAL ENGINEER KENT A. GYLA No. 51532 CIVIL STATE OF CALIFORNIA

NO.	DATE	REVISION	BY

SONOMA COUNTY WATER AGENCY

SCALE: SHOWN
DATE: 02/10/15
DRAWN: SMP
REVIEWED:

404 AVIATION BOULEVARD ROOF REPLACEMENT

ROOF REPLACEMENT PLAN

FILE NAME: 7616ReBid_RoofPlan.dwg
CONTRACT NUMBER: 0-80-7#1A

DRAWING NUMBER: C-3

SHEET 5 OF 11

\\sd-data\proj\general\all facilities\office-sites\Airport\7616_roofreplacement\7616_roof_rebid\7616ReBid_RoofPlan

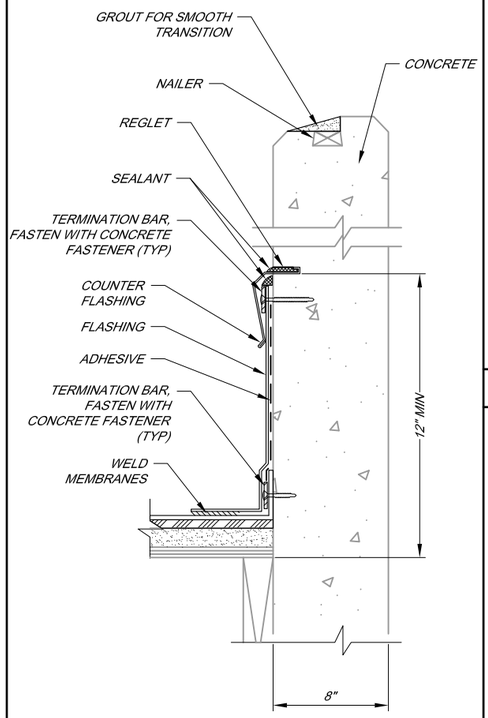

NOTE:
HEIGHT OF PARAPET VARIES. USE THIS DETAIL WHEN PARAPET IS 16" TALL OR HIGHER.

PARAPET | 1

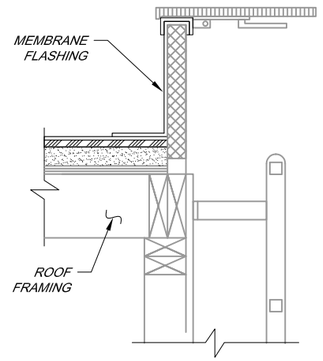

HATCH/CURBS | 2

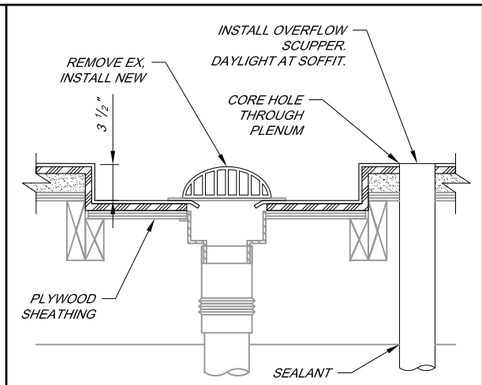

OVERFLOW SCUPPER | 3

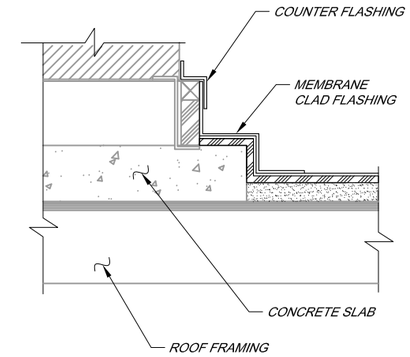

HVAC SLAB | 4

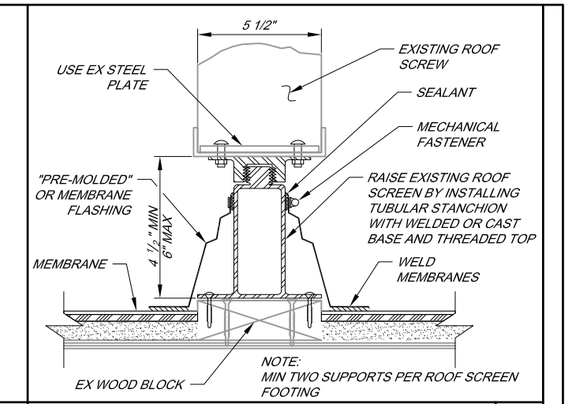

ROOF SCREEN FOOTING DETAIL | 5

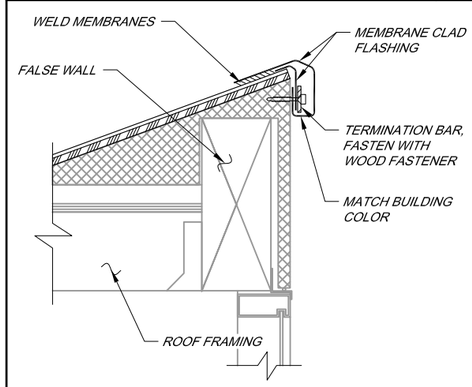

PARAPET AT ENTRANCE | 6

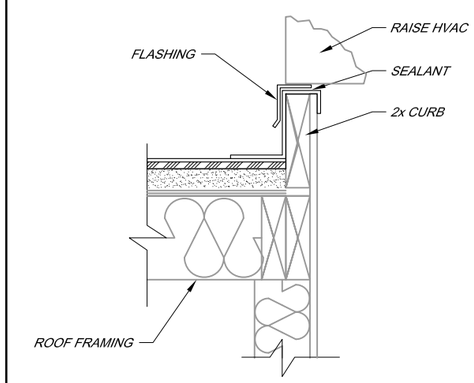

SMALL HVAC CURB | 7

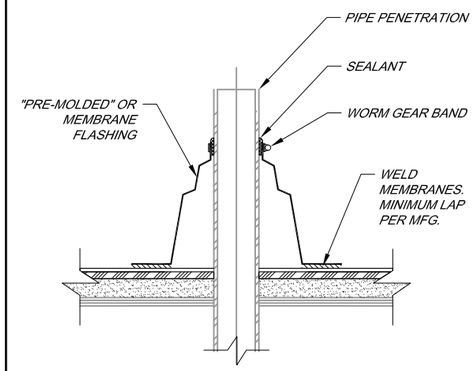

ROOF PENETRATION-SMALL | 8

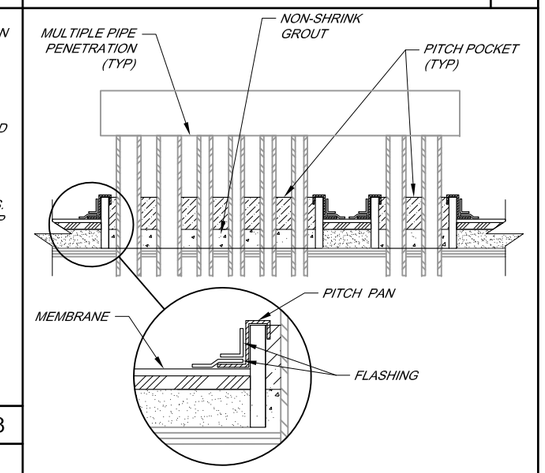

ROOF PENETRATION-MULTIPLE | 9

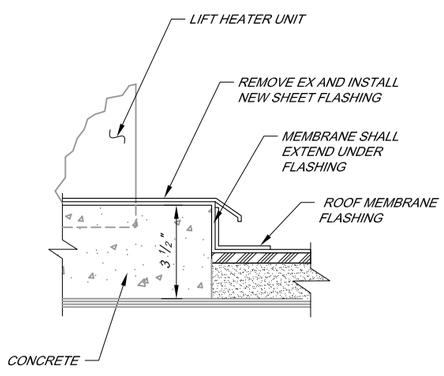

HEATER MECHANICAL PAD | 10

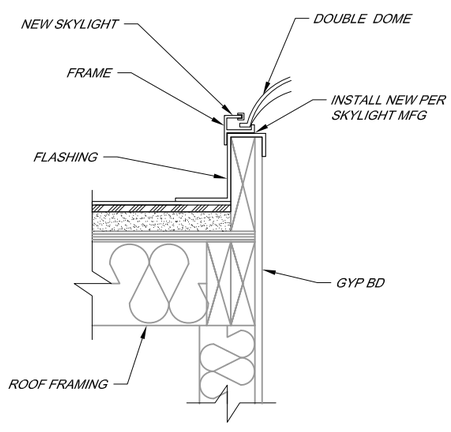

NEW SKYLIGHT | 11

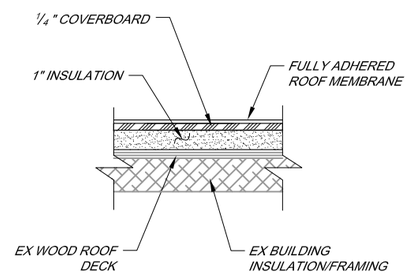

ROOF SYSTEM-CROSS SECTION | 12

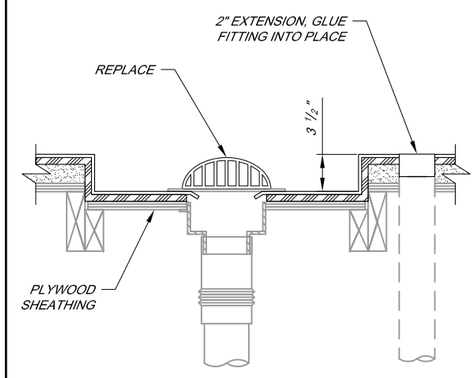

DRAIN | 13

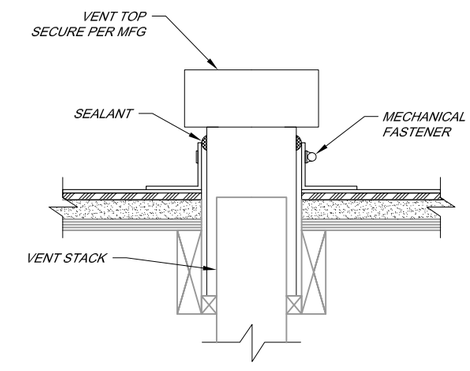

ROOF PENETRATION - MEDIUM | 14

BAR LENGTH ON ORIGINAL DRAWING EQUALS ONE INCH. ADJUST SCALE ACCORDINGLY

REGISTERED PROFESSIONAL ENGINEER
KENT A. GYLA
No. 51532
CIVIL
STATE OF CALIFORNIA

NO.	DATE	REVISION	BY

SONOMA COUNTY WATER AGENCY

SCALE: SHOWN
DATE: 02/10/15
DRAWN: SMP
REVIEWED:

404 AVIATION BOULEVARD ROOF REPLACEMENT
DETAILS

FILE NAME: 7616ReBid_Details.dwg
CONTRACT NUMBER: 0-80-7#1A
DRAWING NUMBER: D-1
SHEET 6 OF 11

\\sd-data\proj\general\all facilities\office-sites\Airport\7616_roofreplacement\7616_roof_rebid\7616ReBid_Details

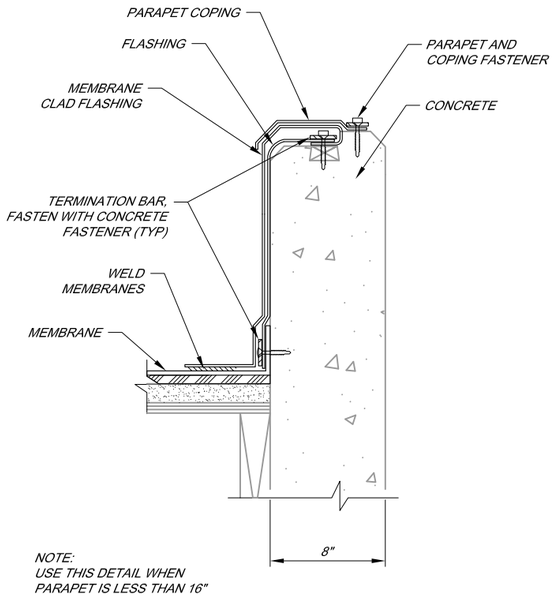

SHORT PARAPET | 15

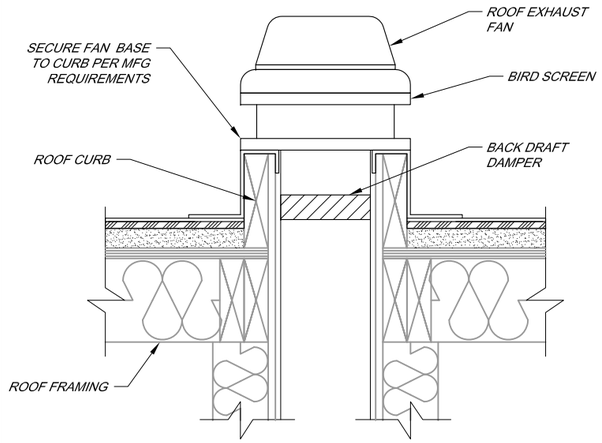

ROOF PENETRATION - LARGE | 17

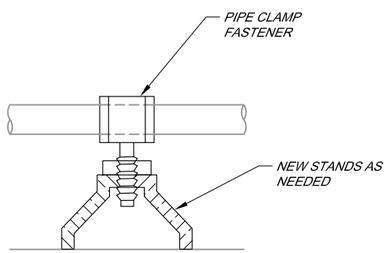

PIPE STAND | 16

BAR LENGTH ON ORIGINAL DRAWING EQUALS ONE INCH. ADJUST SCALE ACCORDINGLY

REGISTERED PROFESSIONAL ENGINEER
KENT A. GYLLA
No. 51532
CIVIL
STATE OF CALIFORNIA

NO.	DATE	REVISION	BY

SONOMA COUNTY WATER AGENCY

SCALE: SHOWN
DATE: 02/10/15
DRAWN: SMP
REVIEWED:

404 AVIATION BOULEVARD ROOF REPLACEMENT

DETAILS

FILE NAME: 7616ReBid_Details.dwg
CONTRACT NUMBER: 0-80-7#1A

DRAWING NUMBER: D-2

SHEET 7 OF 11

\\sd-data\proj\general\all facilities\office-sites\Airport\7616_roof_replacement\7616_roofreplacement\7616_roof_rebid\7616ReBid_Details

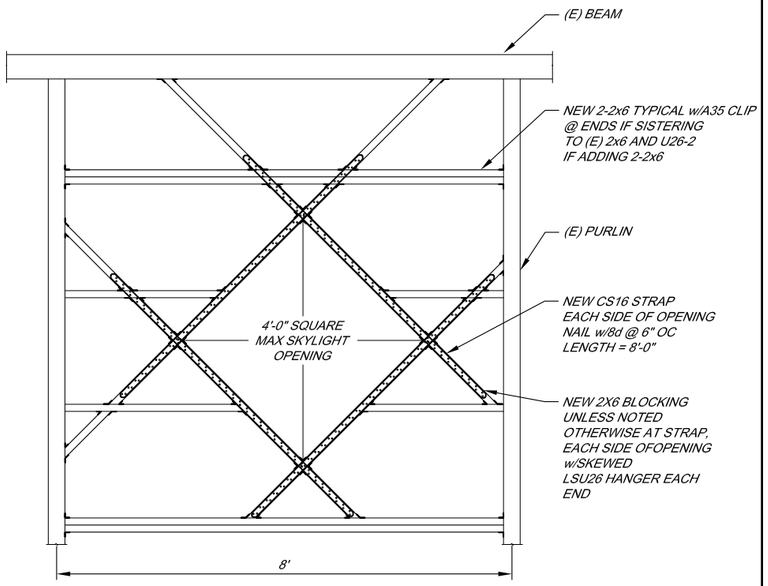

SKYLIGHT OPENING DETAIL | 18

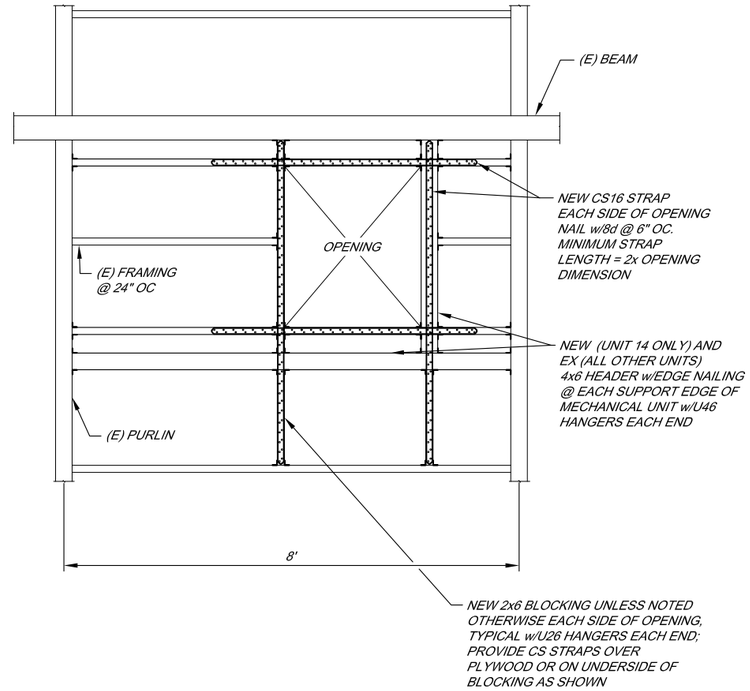

MECHANICAL UNIT OPENING DETAIL | 19

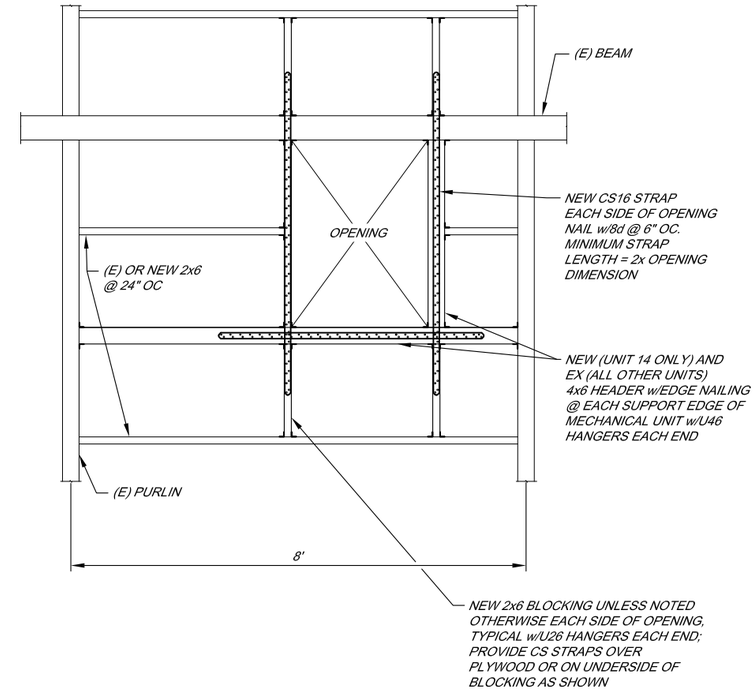

MECHANICAL UNIT OPENING ALTERNATE DETAIL | 20

BAR LENGTH ON ORIGINAL DRAWING EQUALS ONE INCH. ADJUST SCALE ACCORDINGLY

REGISTERED PROFESSIONAL ENGINEER
KENT A. GYLLA
No. 51532
CIVIL
STATE OF CALIFORNIA

NO.	DATE	REVISION	BY

SONOMA COUNTY WATER AGENCY

SCALE: SHOWN
DATE: 02/10/15
DRAWN: SMP
REVIEWED:

404 AVIATION BOULEVARD ROOF REPLACEMENT

DETAILS

FILE NAME: 7616ReBid_Details.dwg
CONTRACT NUMBER: 0-80-7#1A
DRAWING NUMBER: D-3
SHEET 8 OF 11

\\sd-data\proj\general\all facilities\office-sites\Airport\7616_roofreplacement\7616_roof_rebid\7616ReBid_Details

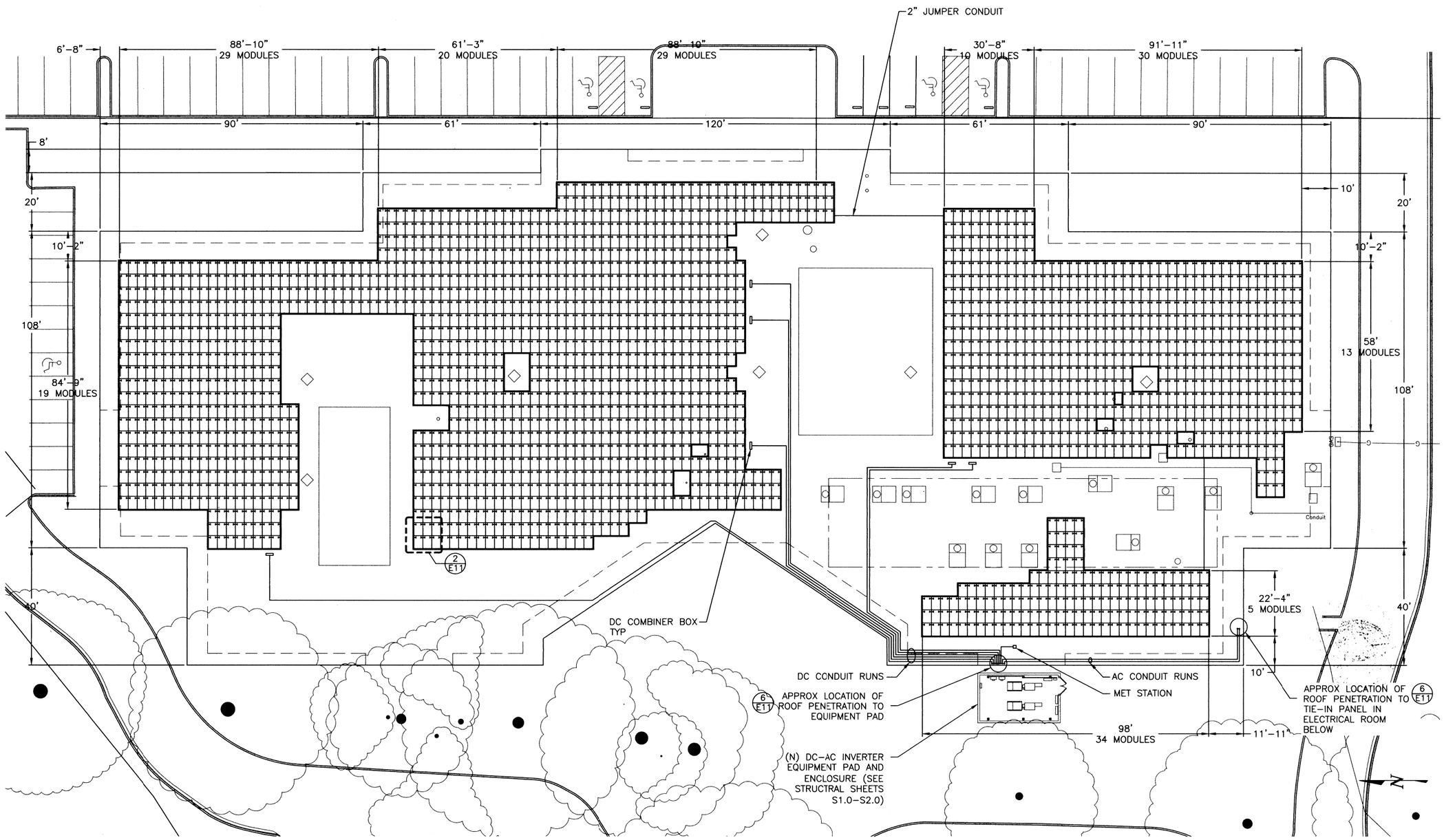

1 ARRAY LAYOUT – POWERGUARD SYSTEM
SCALE: 1/16" = 1'-0"

NOTES:

1. FOR STRING LAYOUT SEE SHT E8

2. NEW CONDUIT ROUTING SHOWN IS ESSENTIALLY DIAGRAMMATIC. SUBCONTRACTOR SHALL LAY OUT RUNS TO SUIT FIELD CONDITIONS AND THE COORDINATION REQUIREMENTS OF OTHER TRADES.

SYSTEM SPECIFICATIONS:

422.5 kWP
(2,224) SANYO 190W POWERGUARD TILES,
8 TILES/STRING, 278 STRINGS

RECORD DRAWING
Contractor: Powerlight Corp.
By: Daniel S. Shinder
Dated: 10/31/06

POWERLIGHT
SOLAR ELECTRIC SYSTEMS
2954 SAN PABLO AVENUE
BERKELEY, CA 94702
(510) 540-0550

THIS DOCUMENT CONTAINS PROPRIETARY INFORMATION OF THE POWERLIGHT CORPORATION. BY RECEIPT OR POSSESSION, YOU DO NOT ACQUIRE TITLE TO, REPRODUCE, DISCLOSE ITS CONTENTS, DISTRIBUTE, OR USE, OR SELL ANYTHING IT MAY DESCRIBE, IN WHOLE OR IN PART. DISCLOSURE, OR USE WITHOUT THE POWERLIGHT CORPORATION'S WRITTEN AUTHORIZATION IS STRICTLY FORBIDDEN.

VERIFY SCALE
0 ½ 1
IF BAR IS NOT ONE INCH, PRINT IS NOT TO SCALE

SONOMA COUNTY WATER
10259

SITE LOCATION
404 AVIATION BLVD.
SANTA ROSA, CA

CUSTOMER
SONOMA COUNTY WATER AGENCY

REVISION	
8	11/8/06 RECORD DRAWING
8	5/11/06 AS BUILT
7	3/30/06 ADDEND 2-CLASSIC INV
6	3/13/06 ADDENDUM 1- COMMENTS
5	2/27/06 ISSUE FOR CONSTRUCTION
4	2/6/06 RESPONSE TO COMMENTS
3	1/7/06 ADDENDUM-E12- DET 2
2	11/2/05 ISSUE FOR PERMIT
1	X/X/05 ISSUE FOR CLIENT REVIEW

DOCUMENT TITLE
ARRAY LAYOUT
POWERGUARD
SYSTEM

DRAWN BY	SHEET
SS	E4
DATE 1/2/06	
SCALE AS SHOWN	

DRAWING NUMBER: 7616_RefDwgs.dwg | DRAWING NUMBER: R-1 | SHEET 9 OF 11

\\sd-data\proj\general\all facilities\office-sites\Airport\7616_roofreplacement\7616_roof_rebid\7616_RefDwgs.dwg

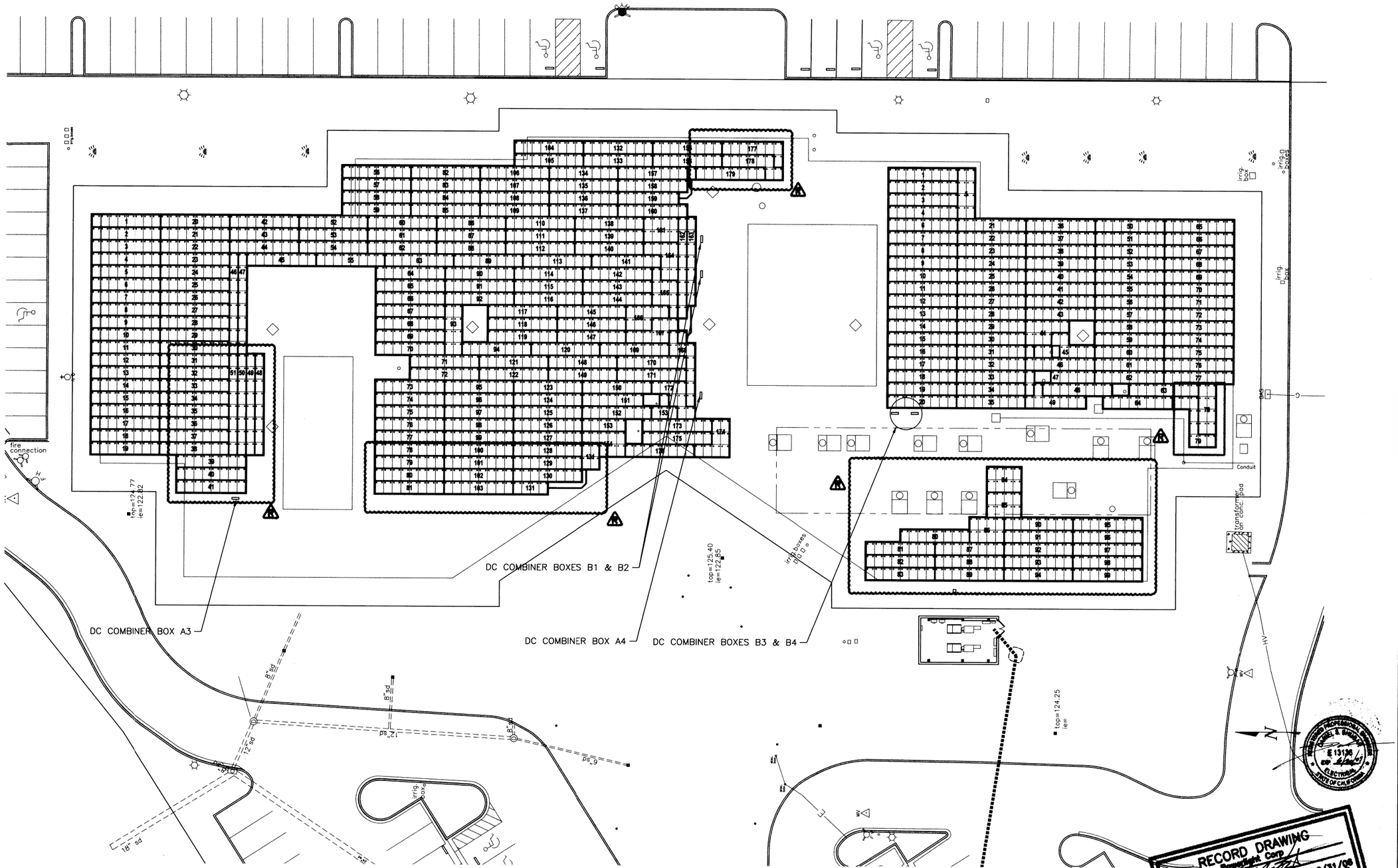

1 STRING WIRING PLAN – POWERGUARD SYSTEM
SCALE: 1/16" = 1'-0"

POWERLIGHT
SOLAR ELECTRIC SYSTEMS
2954 SAN PABLO AVENUE
BERKELEY, CA 94702
(510) 540-0550

THIS DOCUMENT CONTAINS PROPRIETARY INFORMATION OF THE POWERLIGHT CORPORATION, AND ITS RECEIPT OR POSSESSION DOES NOT CONVEY ANY RIGHTS TO REPRODUCE, DISCLOSE THE CONTENTS, OR TO MANUFACTURE, USE, OR SELL ANYTHING THAT IT DESCRIBES. REPRODUCTION, DISCLOSURE, OR USE WITHOUT SPECIFIC WRITTEN AUTHORIZATION OF THE POWERLIGHT CORPORATION IS STRICTLY FORBIDDEN.

VERIFY SCALE
0 ½ 1
IF BAR IS NOT ONE INCH, PRINT IS NOT TO SCALE

SONOMA COUNTY WATER
10259

SITE LOCATION
404 AVIATION BLVD.
SANTA ROSA, CA

CUSTOMER
SONOMA COUNTY WATER AGENCY

REVISION
- 11/8/06 RECORD DRAWING
- 5/11/06 AS BUILT
- 3/30/06 ADDEND 2-CLASSIC INV
- 3/13/06 ADDENDUM 1- COMMENTS
- 2/27/06 ISSUE FOR CONSTRUCTION
- 2/6/06 RESPONSE TO COMMENTS
- 1/7/06 ADDENDUM-E12- DET 2
- 11/2/05 ISSUE FOR PERMIT
- X/X/05 ISSUE FOR CLIENT REVIEW

DOCUMENT TITLE
STRING WIRING PLAN POWERGUARD SYSTEM

DRAWN BY	SHEET
SS	E8
DATE 1/2/06	
SCALE AS SHOWN	

DRAWING NUMBER: 7616_RefDwgs.dwg	DRAWING NUMBER: R-2	SHEET 10 OF 11

\\sd-data\proj\general\all facilities\office-sites\Airport\7616_roofreplacement\7616_roof_rebid\7616_RefDwgs.dwg

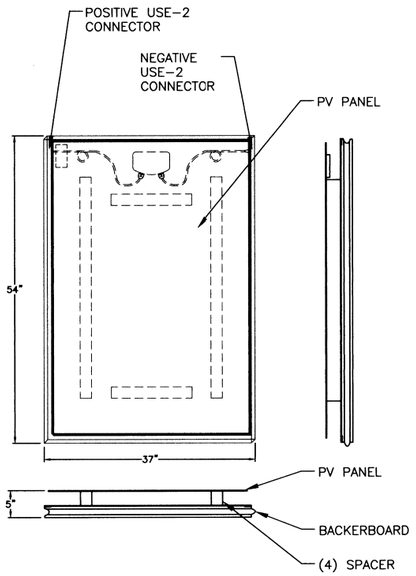

1 POWERGUARD MODULE UNFRAMED SANYO (ROOF TOP)
SCALE: 1" = 1'-0"

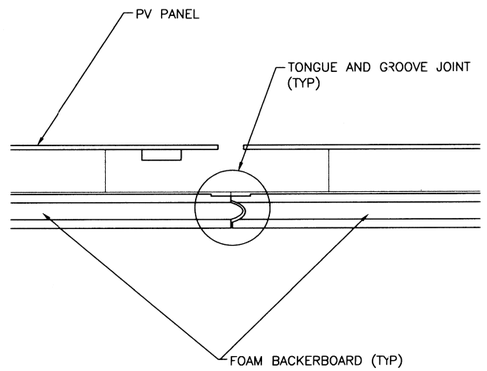

2 POWERGUARD MODULE INSTALLATION DETAIL
SCALE: 3" = 1'-0"

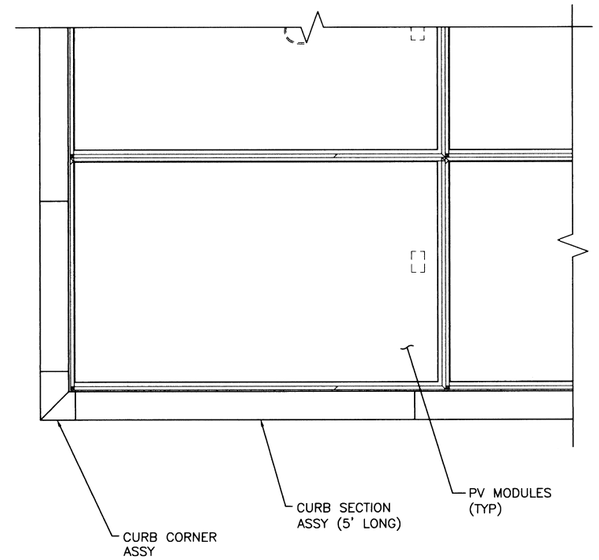

3 POWERGUARD RT CURB LAYOUT
SCALE: 1" = 1'-0"

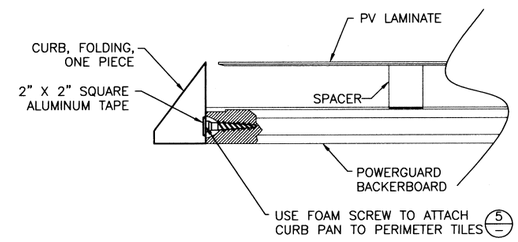

4 POWERGUARD RT CURB LAYOUT – NON BALLASTED
SCALE: 3" = 1'-0"

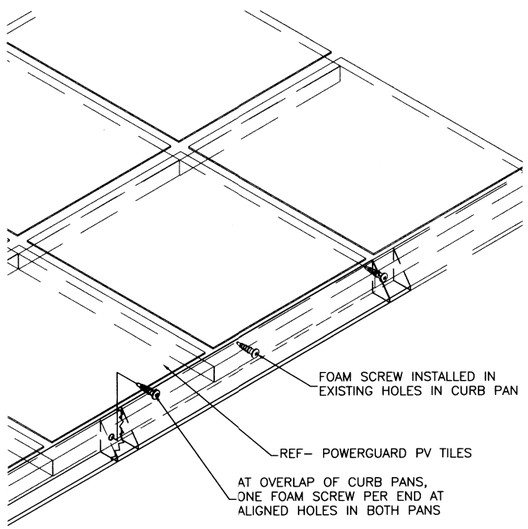

5 ISOMETRIC DETAIL FOAM SCREW LOCATIONS
SCALE: 1" = 1'-0"

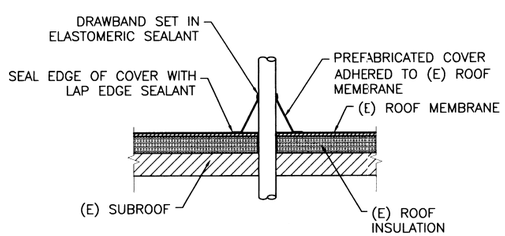

6 ROOF PENETRATION
SCALE: 1" = 1'-0"

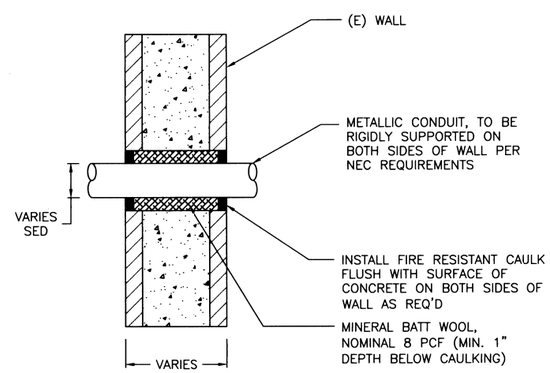

7 WALL PENETRATION
SCALE: 3" = 1'-0"

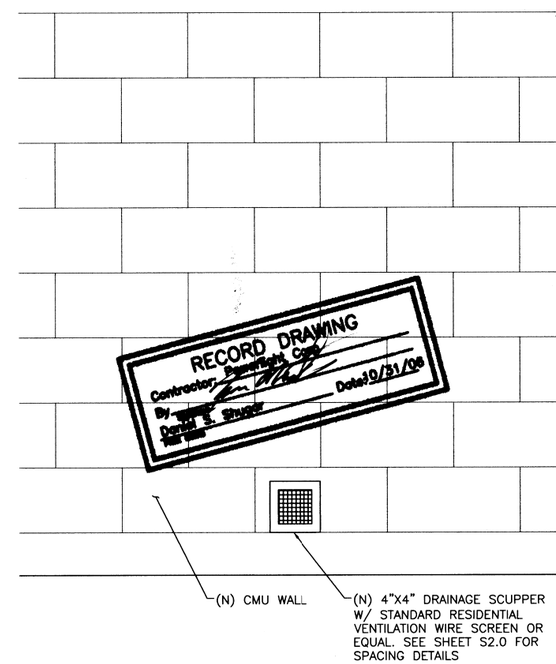

8 EQUIPMENT ENCLOSURE DRAINAGE SCUPPER
SCALE: 1 1/2" = 1'-0"

POWERLIGHT
SOLAR ELECTRIC SYSTEMS
2954 SAN PABLO AVENUE
BERKELEY, CA 94702
(510)540-0550

THIS DOCUMENT CONTAINS PROPRIETARY INFORMATION, THE PROPERTY OF POWERLIGHT CORPORATION, AND ITS RECEIPT OR POSSESSION DOES NOT CONVEY REPRODUCE, DISCLOSE ITS CONTENTS, OR ANYONE TO USE, OR SELL ANYTHING IT MAY DISCOVER, WITHOUT WRITTEN AUTHORIZATION OF THE POWERLIGHT CORPORATION, IS STRICTLY FORBIDDEN.

VERIFY SCALE
0 ½ 1
IF BAR IS NOT ONE INCH PRINT IS NOT TO SCALE

SONOMA COUNTY WATER
10259

SITE LOCATION
404 AVIATION BLVD.
SANTA ROSA, CA

CUSTOMER:
SONOMA COUNTY WATER AGENCY

REGISTERED PROFESSIONAL ENGINEER
DANIEL E. STUBER
E 13138
EXP 12/31/07
ELECTRICAL
STATE OF CALIFORNIA

REVISION	
8	11/8/06 RECORD DRAWING
8	5/11/06 AS BUILT
7	3/30/06 ADDEND 2–CLASSIC INV
6	3/13/06 ADDENDUM 1– COMMENTS
5	2/27/06 ISSUE FOR CONSTRUCTION
4	2/6/05 RESPONSE TO COMMENTS
3	1/7/05 ADDENDUM–E12– DET 2
2	11/2/05 ISSUE FOR PERMIT
1	X/X/05 ISSUE FOR CLIENT REVIEW

DOCUMENT TITLE:
GENERAL DETAILS SHEET 1

DRAWN BY	SHEET
SS	E11
DATE 1/2/C6	
SCALE AS SHOWN	

DRAWING NUMBER: 7616_RefDwgs.dwg	DRAWING NUMBER: R-3	SHEET 11 OF 11

\\sd-data\proj\general\all facilities\office-sites\Airport\7616_roofreplacement\7616_roof_rebid\7616_RefDwgs.dwg