CONTRACT NO.
0-706-7 #01

PROJECT MANUAL

VOLUME 1 OF 2

FOR

Service Center Relocation
(2025 Aviation Boulevard)

SONOMA
COUNTY
WATER
AGENCY

JUNE 2011

DOCUMENT 00001

PROJECT MANUAL

Volume 1 of 2

for

CENTER RELOCATION
(2025 AVIATION BOULEVARD)

SONOMA COUNTY WATER AGENCY

BOARD OF DIRECTORS

Valerie Brown
David Rabbitt
Shirlee Zane
Michael McGuire
Efren Carrillo, Chair

Advertisement Date: June 2011

Bid Date: Tuesday, July 19, 2011

CONTRACT NUMBER: 0-706-7 #01

© 2011 Sonoma County Water Agency

DOCUMENT 00007

SEALS PAGE

Sonoma County Water Agency

Dennis Daly, P. E.
Sonoma County Water Agency

Date: 6/7/11

Dale Roberts, P. E.
Sonoma County Water Agency

Date: 6/7/11

Lisa M. Meline, P. E.
Meline Engineering

Date: 6-7-11

Andy Tchirkine, P.E.
Summit Engineering, Inc.

Date: 6-7-11

Chris Richards, P.E.
Winzler & Kelly, Inc.

Date: 6/7/11

rlm

END OF DOCUMENT

DOCUMENT 00010

TABLE OF CONTENTS

STANDARD EDITION

(Volume 1 of 2)

INTRODUCTORY INFORMATION

Document	Title
00001	Title Page
00007	Seals Page
00010	Table of Contents

BIDDING REQUIREMENTS

Document	Title
00100	Advertisement for Bids
00200	Instructions to Bidders
00203	Bid Submittal Vicinity Map
00210	Indemnity and Release Agreement
00320	Geotechnical Data and Existing Conditions
00400	Bid Form
00411	Bond Accompanying Bid
00420	Bidder Registration Form
00430	Subcontractors List
00450	Statement of Qualifications for Construction Work
00481	Non-Collusion Affidavit

CONTRACTING REQUIREMENTS

Document	Title
00505	Notice of Intent to Award for Construction
00510	Notice of Award
00520	Agreement
00550	Notice to Proceed
00610	Construction Performance Bond
00620	Construction Labor and Material Payment Bond
00630	Guaranty
00650	Agreement and Release of Any and All Claims
00660	Substitution Request Form
00670	Escrow Bid Documents
00680	Escrow Agreement for Security Deposits in Lieu of Retention

CONDITIONS OF THE CONTRACT

Document	Title
00700	General Conditions
	1. General
	2. Bidding
	3. Contract Award and Commencement of the Work
	4. Bonds and Insurance
	5. Drawings and Specifications
	6. Construction By Owner or by Separate Contractors
	7. Owner and Payment
	8. Control of the Work
	9. Warranty, Guaranty, and Inspection of Work
	10. Contractor's Organization and Equipment
	11. Prosecution and Progress of the Work
	12. Claims by Contractor
	13. Legal and Miscellaneous
	14. Modifications of Contract Documents
	15. Time Allowances
	16. Working Conditions and Prevailing Wages
00800	Supplementary Conditions
00910	Addenda

SPECIFICATIONS

Division 1 - General Requirements

Section	Title
01100	Summary
	– Summary
	– Submittals
	– Work Covered by Contract Documents
	– Bid Items, Allowances, and Alternates
	– Work Under Other Contracts
	– Future Work
	– Work Sequence
	– Work Days and Hours
	– Shutdown For Discovery of Cultural Resources
	– Cooperation of Contractor and Coordination with Other Work
	– Partial Occupancy/Utilization Requirements
	– Contractor Use of Site
	– Air Quality Standards
	– Construction Staking and Monument Protection
	– Protection of Existing Structures and Underground Facilities
	– Permits
	– Actual Damages
	– Work at Wastewater Treatment Plant
	– Rights-of-Way
	– Document Tracking
	– Products Ordered in Advance
	– Owner-Furnished Products
01200	Price and Payment Procedures
01250	Modification Procedures
01315	Project Meetings
01320	Progress Schedules and Reports
01330	Submittal Procedures
01410	Regulatory Requirements
01420	References and Definitions
01450	Quality Control
01500	Temporary Facilities and Controls
01540	Site Security and Safety
01600	Product Requirements
01735	Selective Demolition, Cutting, and Patching
01737	Openings and Penetrations in Construction
01740	Cleaning
01741	Construction Material Waste Management Plan
01750	Starting and Adjusting
01770	Contract Closeout
01780	Project Record Documents
01810	Commissioning
01825	Training

Division 2 - Site Construction

Section	Title
02240	Dewatering
02255	Shoring
02315	Excavation, Bedding, and Backfill
02515	Reclaimed Water Main
02535	Sanitary Sewer Systems
02536	Manholes, Cleanouts, and Covers
02725	Aggregate Base
02745	Asphalt Pavement
02760	Pavement Markings
02821	Chain Link Fence and Gates

Division 3 - Concrete

Section	Title
03100	Concrete Form Work
03200	Concrete Reinforcement
03300	Cast-In-Place Concrete

Division 4 – Masonry (Not Used)

Division 5 – Metals

Section	Title
05400	Light Gauge Metal Framing
05500	Metal Fabrications

Division 6 – Wood and Plastics

Section	Title
06200	Finish Carpentry and Millwork
06410	Casework and Solid Surfacing Fabrications

Division 7 – Thermal and Moisture Protection

Section	Title
07210	Building Insulation
07600	Flashing and Sheet Metal
07900	Sealants

Division 8 – Doors and Windows

Section	Title
08100	Metal Doors and Frames
08360	Insulated Sectional Overhead Doors

Section	Title
08625	Light Tubes
08710	Finish Hardware

Division 9 - Finishes

Section	Title
09250	Gypsum Board
09510	Suspended Ceilings
09650	Resilient Flooring
09900	Paints and Coatings

Division 10 – Specialties

Section	Title
10440	Interior Signage
10450	Access Control System
10500	Lockers
10520	Fire Protection Specialties

Division 11 – Equipment (Not Used)

Division 12 – Furnishings (Not Used)

Division 13 – Special Construction

Section	Title
13120	Pre-Engineered Metal Building
13121	Pre-Engineered Building - Aluminum Windows and Entrances
13122	Pre-Engineered Building - Ridge Vents
13125	Pre-Engineered Mezzanine System
13440	Instrumentation for Process Control: Basic Requirements
13441	Recycled Water System Control Loop Descriptions
13442	Recycled Water System Primary Elements and Transmitters
13448	Recycled Water System Control Panels and Enclosures
13500	Recycled Water System Programmable Logic Control (PLC) Control System

Division 14 – Conveying Systems (Not Used)

Division 15 – Mechanical

Section	Title
15050	Basic Mechanical Materials and Methods
15086	Duct Insulation
15088	HVAC Pipe Insulation
15181	Hydronic Piping and Specialties
15300	Automatic Fire Sprinklers
15400	Plumbing
15745	Water-Source Heat Pumps

Section	Title
15791	Recycled Water Storage Tank
15792	Recycled Water Hydronic Pumps
15793	Recycled Water Hydronic Piping Specialties
15794	Recycled Water Valves: Basic Requirements
15795	Recycled Water Pipe Support Systems
15815	Ductwork and Accessories
15838	Power Ventilators
15940	Mechanical Control Sequence
15950	Testing, Adjusting, and Balancing of HVAC Systems
15990	Commissioning of HVAC Systems

Division 16 – Electrical

Section	Title
16050	Common Work Results for Electrical
16060	Grounding and Bonding for Electrical Systems
16075	Identification for Electrical Systems
16121	Medium Voltage Cables
16123	600-Volt Power Conductors and Cables
16126	Medium Voltage Testing and Preventative Maintenance
16128	Raceways and Boxes
16140	Wiring Devices
16149	Lighting and Control Devices
16271	Liquid Filled Transformers
16411	Disconnect Switches
16442	600-Volt Rated Panelboards and Circuit Breakers
16500	Lighting
16720	Fire Alarm System
16750	Telecommunications General Requirements
16751	Telecommunications Acceptance Testing
16752	Telecommunications Materials and Methods
16753	Telecommunications Cable
16754	Telecommunications Demolition
16755	Telecommunications Grounding and Bonding

(Volume 2 of 2)

DRAWINGS

(See Drawing Index on Drawing No. G-1)

END OF DOCUMENT

BIDDING REQUIREMENTS

DOCUMENT 00100

ADVERTISEMENT FOR BIDS

1. **NOTICE.** The Sonoma County Water Agency ("Owner"), a public agency of the State of California, hereby gives notice that it will accept Bids for construction of the following public work:

Contract Number 0-706-7 #01
Service Center Relocation
(2025 Aviation Boulevard)

2. **DESCRIPTION AND LOCATION OF THE WORK.** The Work consists of construction of a new building and modification of an existing building to accommodate Owner's Service Center Relocation, at 2025 Aviation Boulevard, Santa Rosa, California. The Work includes, but is not limited to, the construction of a pre-engineered metal building, grading, paving, mechanical, electrical, and related work. Bidding Documents contain the full description of the Work.

3. **ESTIMATED PROJECT COST RANGE:** $1.5 to $2 million.

4. **REQUIRED CONTRACTOR'S LICENSE(S).** A California "B" contractor's license is required to Bid this Contract. Joint ventures must secure a joint venture license prior to award of this Contract.

5. **CONTACT INFORMATION.**

Mailing address:
Sonoma County Water Agency
404 Aviation Blvd
Santa Rosa, CA 95403-9019

Project Engineer:
Dennis Daly, P. E.

Phone: 707-547-1900

Fax: 707-524-3782

Office:
Sonoma County Water Agency
404 Aviation Boulevard
Santa Rosa, CA 95403-9019

Website address:
www.sonomacountywater.org

Email: BidderQuestions@scwa.ca.gov

6. **ELECTRONIC ACCESS TO BIDDING DOCUMENTS.** Bidders may view Bidding Documents on Owner's website: www.sonomacountywater.org. The only way to ensure receipt of Addenda is to register as a Planholder with Owner. Bidders can register on the website or at Owner's office.

7. **PROCUREMENT OF BIDDING DOCUMENTS.** Bidders may examine Bidding Documents at Owner's Office. Bidders may obtain hard copies of Bidding Documents upon registration as a Planholder through Owner's office and payment of a non-refundable fee of $20 for each copy. Owner will accept cash or checks payable to "Sonoma County Water Agency." Bidding Documents need not be returned to Owner. Bidding Documents contain a reduced set of Drawings. Bidders may arrange to obtain full-size Drawings from Digital Prints & Imaging, 375

Tesconi Circle, Santa Rosa, CA 95401, 707-546-0401, for an additional charge to be paid directly to Digital Prints & Imaging.

8. **MANDATORY PRE-BID SITE VISIT.** Owner will conduct Pre-Bid Site Visits at 10:00 a.m. on Tuesday, June 28, 2011, and at 2:00 p.m. on Thursday, June 30, 2011, at the Site. Attendees shall meet at the Treatment Plant Entrance Gate.

   Bidders must attend one of the Pre-Bid Site Visits and sign an attendance roster as a condition to bidding.

   Bidders will be provided the opportunity to investigate conditions or otherwise conduct invasive investigations, explorations, tests, or studies at the Pre-Bid Site Visit, subject to delivering an executed Document 00210 (Indemnity and Release Agreement) and providing an insurance certificate as described therein by noon of the Day prior to the Pre-Bid Site Visit. This will be the Bidders' only opportunity to investigate conditions at the Site. Bidders who intend only to observe Site conditions and not conduct such examinations are not required to provide an executed Document 00210 (Indemnity and Release Agreement) or an insurance certificate for the Pre-Bid Site Visit. The Pre-Bid Site Visit is merely a showing of the Site and existing conditions and will not provide an opportunity for Bidders to have questions answered. Bidders are encouraged, however, to submit written questions. Owner will transmit to all Registered Planholders (all parties recorded as having received Bidding Documents) such Addenda as Owner in its discretion considers necessary in response to written questions. Bidding Documents will not be available at the Pre-Bid Site Visit.

   Bidders shall not rely on oral statements. Oral statements will not be binding or legally effective.

   Other Pre-Bid Site Visits may be scheduled at Owner's sole discretion, depending on staff availability.

9. **RESTRICTIONS ON SUBSTITUTIONS.** As a limitation on Bidder's privilege to substitute "or equal" items, Owner has found that certain items are designated as Owner standards and certain items are designated to match existing items in use on a particular public improvement either completed or in the course of completion or are available from one source. As to such items, Owner will not permit substitution. Such items are: ReadyKey Pro access control system, Programmable Logic Controller (PLC), Human-Machine Interface (HMI), Uninterruptible Power Supply (UPS), Magnetic Flow Meter, Level Transmitter, and Pressure Transmitter.

10. **INSTRUCTIONS.** Bidders shall refer to Document 00200 (Instructions to Bidders) for required documents and items to be submitted in sealed envelopes for deposit into the Bid boxes, located at Owner's Office, and applicable times for submission.

11. **STATEMENTS OF QUALIFICATIONS.** Each Bidder shall be required to submit, in accordance with Document 00200 (Instructions to Bidders) and Document 00450 (Statement of Qualifications for Construction Work), a Statement of Qualifications.

12. **BID SUBMISSION.** Sealed Bids will be received at Owner's Office (see paragraph 5) until 1:00 p.m., Tuesday, July 19, 2011. Owner's staff will determine official time and will call out the designated time in the Bid reception area of Owner's Office, stating that the period for accepting

Bids is closed. The Bid opening will be in accordance with procedures set forth in Document 00200 (Instructions to Bidders).

13. **BID PREPARATION COST.** Bidders are solely responsible for the cost of preparing their Bids.

14. **CONTRACT TIME.** Work shall be completed within 300 Days from the date when Contract Time commences to run.

15. **PAYMENT BONDS.** In accordance with California Civil Code Section 3247, payment bonds as set forth in Document 00200 (Instructions to Bidders) will be required from the successful Bidder.

16. **PREVAILING WAGE LAWS.** The successful Bidder must comply with all prevailing wage laws applicable to the Project, and related requirements contained in the Contract Documents.

17. **SUBSTITUTION OF SECURITIES.** Owner will permit successful Bidder to substitute securities for retention monies withheld to ensure performance of Contract, as set forth in Document 00680 (Escrow Agreement for Security Deposits in Lieu of Retention), in accordance with California Public Contract Code, Section 22300. By this reference, Document 00680 (Escrow Agreement for Security Deposits in Lieu of Retention) is incorporated in full in this Document 00100.

18. **RESERVATION OF RIGHTS.** Owner specifically reserves the right, in its sole discretion, to reject any or all Bids, or re-bid, or to waive inconsequential deviations from Bid requirements not involving time, price, or quality of the Work.

19. **INTERNATIONAL ORGANIZATION FOR STANDARDIZATION (ISO).** Owner is currently pursuing certification for ISO 9001 and 14001. Bidding Documents and Contract Documents contain information and requirements related to ISO.

By order of the Sonoma County Water Agency's General ManagerSonoma County Water Agency.

END OF DOCUMENT

DOCUMENT 00200

INSTRUCTIONS TO BIDDERS

STANDARD EDITION

Bids are requested for a general construction contract, or work described in general, as follows:

Service Center Relocation
(2025 Aviation Boulevard)

1. **RECEIPT OF BIDS.** Sealed Bids will be received at Owner's Office (see paragraph 3 of this Document 00200 and Document 00203 [Bid Submittal Vicinity Map]) on Tuesday, July 19, 2011. Owner will accept Bids only from Bidders duly licensed in accordance with the California Business & Professions Code. Owner will receive Bids in two separate opaque sealed 10" x 13" envelopes, labeled Envelope "A" and Envelope "B," each containing the respective items described in paragraphs 6 and 7 of this Document 00200. All Bid envelopes will be time-stamped to reflect their submittal time. **Envelope "A" shall be due by 1:00 p.m., and Envelope "B" shall be due by 2:00 p.m.** Owner's staff will determine official time and will call out the specified time in the Bid reception area of Owner's Office. Owner will reject all Bids received after the specified time and will return such Bids to Bidders unopened. Bidders must submit Bids in accordance with this Document 00200.

2. **BID OPENING.** Owner will open all Bidders' Envelopes "A" at 2:00 p.m. on the date specified in paragraph 1 above, initially evaluate them for responsiveness, and determine an Apparent Low Bidder as specified herein. Owner will not open Envelopes "B" publicly and, except for the Apparent Low Bidder's Envelope "B" (or as otherwise provided in this Document 00200), they will remain unopened.

3. **CONTACT INFORMATION.**

Mailing address:
Sonoma County Water Agency
404 Aviation Blvd
Santa Rosa, CA 95403-9019

Project Engineer:
Dennis Daly, P. E.

Phone: 707-547-1900

Fax: 707-524-3782

Email: BidderQuestions@scwa.ca.gov

Office:
Sonoma County Water Agency
404 Aviation Boulevard
Santa Rosa, CA 95403-9019

Website address:
www.sonomacountywater.org

4. **MANDATORY PRE-BID SITE VISIT.** Owner will conduct Pre-Bid Site Visits at 10:00 a.m. on Tuesday, June 28, 2011, and at 2:00 p.m. on Thursday, June 30, 2011, at the Site. Attendees shall meet at the Treatment Plant Entrance Gate.

   Bidders must attend one of the Pre-Bid Site Visits and sign an attendance roster as a condition to bidding.

   Bidders will be provided the opportunity to investigate conditions or otherwise conduct invasive investigations, explorations, tests, or studies at the Pre-Bid Site Visit, subject to

delivering an executed Document 00210 (Indemnity and Release Agreement) and providing an insurance certificate as described therein by noon of the Day prior to the Pre-Bid Site Visit. This will be the Bidders' only opportunity to investigate conditions at the Site. Bidders who intend only to observe Site conditions and not conduct such examinations are not required to provide an executed Document 00210 (Indemnity and Release Agreement) or an insurance certificate for the Pre-Bid Site Visit. The Pre-Bid Site Visit is merely a showing of the Site and existing conditions and will not provide an opportunity for Bidders to have questions answered. Bidders are encouraged, however, to submit written questions. Owner will transmit to all Registered Planholders (all parties recorded as having received Bidding Documents) such Addenda as Owner in its discretion considers necessary in response to written questions. Bidding Documents will not be available at the Pre-Bid Site Visit.

Attendance at the work showing does not guarantee receipt of Addenda. The only way to ensure receipt of Addenda is to register as a Planholder with Owner.

Bidders shall not rely on oral statements. Oral statements will not be binding or legally effective.

Other Pre-Bid Site Visits may be scheduled at Owner's sole discretion, depending on staff availability.

5. BID SUBMISSION. Bidder shall mark its Bid envelopes on the outside with Bidder's name and the following:

BID FOR THE SONOMA COUNTY WATER AGENCY,
CONTRACT NUMBER 0-706-7 #01,
SERVICE CENTER RELOCATION
(2025 AVIATION BOULEVARD)
"Envelope A" or "Envelope B" (as appropriate)

Bids shall be deemed to include the written responses of the Bidder to any questions or requests for information of Owner made as part of Bid evaluation process after submission of Bid. Bidder's failure to submit all required documents strictly as required entitles Owner to reject the Bid as non-responsive. The submission of a Bid does not commit Owner to award a contract for the Project, to pay costs incurred in the preparation of a Bid, or to procure or contract for any goods or services.

6. CONTENTS OF ENVELOPE "A" - BID PRICE. Envelope "A" shall include:

A. Document 00400 (Bid Form) completed in accordance with paragraph 8 of this Document 00200.
B. Bid security completed in accordance with paragraph 9 of this Document 00200.
C. Document 00430 (Subcontractors List) in accordance with paragraph 10 of this Document 00200 and Document 00430 (Subcontractors List).
D. Document 00481 (Non-Collusion Affidavit).

7. CONTENTS OF ENVELOPE "B" - BIDDER QUALIFICATIONS. Envelope "B" shall include:

A. Statement of Qualifications including all necessary attachments and supporting documents submitted in accordance with paragraph 11 of this Document 00200 and Document 00450 (Statement of Qualifications for Construction Work).
B. Document 00420 (Bidder Registration Form). Bidder must complete this form and include comprehensive answers to all questions.

8. **REQUIRED BID FORMS.** All Bidders must submit Bids using, where applicable, documents supplied in this Project Manual, including without limitation Document 00400 (Bid Form), Document 00420 (Bidder Registration Form), Document 00430 (Subcontractors List), and Document 00450 (Statement of Qualifications for Construction Work). Owner will reject as non-responsive any Bid not submitted on the required forms. Bids must be full and complete. Bidders must complete all Bid items and supply all information required by Bidding Documents. Owner reserves the right in its sole discretion to reject any Bid as non-responsive as a result of any error or omission in the Bid. Bidders may not modify the Bid Form or qualify their Bids. Bidders must submit clearly and distinctly written Bids. Bidders must clearly make any changes in their Bids by crossing out original entries, entering new entries, and initialing new entries. Owner reserves the right to reject any Bid not clearly written.

9. **REQUIRED BID SECURITY.** Bidders must submit with their Bids either cash, a cashier's check, or certified check from a responsible bank in the United States, or corporate surety bond furnished by a surety authorized to do business in the State of California, of not less than ten percent of amount of Total Bid price, payable to "Sonoma County Water Agency." All Bidders choosing to submit a surety bond must submit it on the required form, Document 00411 (Bond Accompanying Bid). Owner will reject as non-responsive any Bid submitted without the necessary Bid security.

   Owner may retain Bid security of other than the Apparent Low Bidder for a period of 60 Days after issuance of the Notice of Award. After award, Owner will return to the respective unsuccessful Bidders their Bid securities and Bid bonds.

10. **REQUIRED SUBCONTRACTORS LIST.** All Bidders must submit with their Bids the required information on all Subcontractors in Document 00430 (Subcontractors List) for those Subcontractors who will perform any portion of Work, including labor, rendering of service, or specially fabricating and installing a portion of the Work or improvement according to detailed drawings contained in the plans and specifications, in excess of one half of one percent of total Bid. Violation of this requirement may result in Bid being deemed non-responsive and not being considered.

11. **REQUIRED STATEMENT OF QUALIFICATIONS.** In order for a Bidder to be eligible to Bid on this Contract, it must submit a Statement of Qualifications responsive to the requirements identified in Document 00450 (Statement of Qualification for Construction Work) ("SOQ"), including without limitation qualification information for Subcontractors and schedulers, if any. Except as otherwise provided in paragraphs 20 and 21 of this Document 00200 or in Document 00450 (Statement of Qualification for Construction Work), Owner will make final determinations regarding Bidder responsibility based solely upon the SOQ submitted as part of Envelope "B" on Bid day. Information in the SOQ shall be current.

12. **OTHER REQUIREMENTS PRIOR TO BIDDING.** Submission of Bid signifies Bidder's careful examination of Bidding Documents and complete understanding of the nature, extent, and location of Work to be performed. As a condition to Bidding, Bidder must complete tasks listed in Document 00520 (Agreement), Article 5. Submission of Bid shall constitute Bidder's express representation to Owner that Bidder has fully completed these tasks.

13. **EXISTING DRAWINGS AND GEOTECHNICAL DATA.** Bidders may examine any available existing conditions information (e.g., record documents, specifications, studies, drawings of previous work) and applicable environmental assessment information (if any) regarding the Project by giving Owner reasonable advance notice. Document 00320 (Geotechnical Data and Existing Conditions) applies to all supplied existing conditions information and geotechnical

reports and all other information supplied regarding existing conditions either above ground or below ground.

14. BIDDER QUESTIONS AND ADDENDA. Bidders must direct all questions about the meaning or intent of Bidding Documents to Owner (Attention: Project Engineer) in writing at the address, fax number, or email indicated in Paragraph 3. Interpretations or clarifications considered necessary by Owner in response to such questions will be issued by Addenda. Addenda will be written and will be issued to each Registered Planholder to the address, fax number, or email supplied to Owner by Bidder. Owner may not answer questions received less than fourteen Days prior to the date for opening Bids. Only questions answered by formal written Addenda will be binding. Oral and other interpretations or clarifications will be without legal effect.

A. Addenda may also be issued to modify the Bidding Documents as deemed advisable by Owner.
B. Addenda shall be acknowledged by number with signature in Document 00400 (Bid Form) and shall be part of the Contract Documents. A complete listing of Addenda may be secured from Owner.
C. The only way to ensure receipt of Addenda is to register as a Planholder with Owner.

15. SUBSTITUTIONS. Bidders must base their Bids on products and systems specified in Contract Documents or listed by name in Addenda.

A. Except as provided in paragraph 15.D of this Document 00200, Owner will consider substitution requests only for "or equal items." Bidders wanting to use "or equal" item(s) may submit Document 00660 (Substitution Request Form) no later than 14 Days prior to submitting their Bids. After that date, Owner will not accept "or equal" substitution requests. To assess "or equal" acceptability of product or system, submittals of substitutions shall contain the information required in Document 00660 (Substitution Request Form) and set forth in Section 01600 (Product Requirements). Insufficient information will be grounds for rejection of substitution. Owner shall, within a reasonable period of time after having received a Request for Substitution, issue in writing its decision as to whether the proposed substitute item is an Equal item. Owner's decision shall be conclusive on all Bidders.
B. Approved substitutions shall be listed in Addenda and become part of the Contract Documents.
C. Substitutions may be requested after submitting Bids and Award of Contract only in accordance with requirements specified in Section 01600 (Product Requirements).
D. As further limitation on Bidder's privilege to substitute items, Owner has found that:
   1. Certain items are designated as Owner standards and certain items are designated to match existing items in use on a particular public improvement, either completed or in the course of completion. As to such items, Owner will not permit substitution. Owner will not permit substitutions for the following items:
      a. ReadyKey Pro access control system, Programmable Logic Controller (PLC), Human-Machine Interface (HMI), Uninterruptible Power Supply (UPS), Magnetic Flow Meter, Level Transmitter, and Pressure Transmitter.

   2. Certain items are designated in order that a field test or experiment may be made to determine the product's suitability for future use. As to such items, Owner will not permit substitution. Owner will not permit substitutions for the following items:
      a. None.

3. Certain necessary items are only available from one source. As to such items, Owner will not permit substitution. Owner will not permit substitutions for the following items:
   a. None.

16. WAGE RATES. Copies of the general prevailing rates of per diem wages for each craft, classification, or type of worker needed to execute the Contract, as determined by Director of the State of California Department of Industrial Relations, are on file at Owner's Office and are deemed included in the Bidding Documents. Upon request, Owner will make available copies to any interested party. Copies are also available at www.dir.ca.gov/labor_law.html. Also, Contractor shall post the applicable prevailing wage rates at the Site.

17. EQUAL EMPLOYMENT OPPORTUNITY. Contractor shall comply with all applicable federal, state, and local laws, rules, and regulations in regard to nondiscrimination in employment because of race, color, ancestry, national origin, religion, sex, marital status, age, medical conditions, disability, or any other reason.

18. WITHDRAWAL OF BIDS. Bidders may withdraw their Bids at any time prior to the Bid opening time fixed in this Document 00200, only by written request for the withdrawal of Bid filed with Owner. Bidder or its duly authorized representative shall execute request to withdraw Bid.

19. DETERMINATION OF APPARENT LOW BIDDER (Envelope "A"). Apparent Low Bid will be based solely on the total amount of all Bid items based on assumptions contained in Document 00400 (Bid Form). All Bidders are required to submit Bids on all Bid items.

20. EVALUATION OF BIDDER RESPONSIBILITY (Envelope "B").

A. Owner will open Apparent Low Bidder's Envelope "B" and check its contents for compliance with paragraph 7 of this Document 00200 and this paragraph 20. Owner will notify Apparent Low Bidder in writing of any deficiencies found and will provide Bidder the opportunity to respond in writing with reasonable clarifications but will not allow any changes in the nature of Bidder as a business entity.

B. If any Apparent Low Bidder is determined to be non-responsive or non-responsible, Owner may open the next Apparent Low Bidder's Envelope "B" pursuant to any procedures determined in Owner's reasonable discretion, and proceed for all purposes as if this Apparent Low Bidder were the original Apparent Low Bidder.

C. Bidder's compliance with the minimum qualification requirements in this paragraph 20.C will be measured by the experience of both the Bidder itself as well as the Key Personnel identified by Bidder in Document 00450 (Statement of Qualifications for Construction Work) who will have responsible charge of the various major components of the Work. If Bidder subcontracts portions of the Work, Owner, in its determination of whether the minimum qualification requirements have been met, will consider the qualifications of the Subcontractor's Key Personnel identified by Bidder in Document 00450 (Statement of Qualifications for Construction Work). The following are minimum requirements for the Bidder to be found responsible to perform the Work.
   1. Five years experience as a continuously operating entity engaged in the performance of similar work.
   2. Within the past five years completed two construction projects of a similar nature and complexity with a contract dollar amount of at least $800,000 each.
   3. Sufficient financial strength, stability and resources as measured by Bidder's equity, debt-to-assets ratio, and capability to finance the Work to be performed.

4. Ability to secure, in accordance with the Contract Documents, the required forms of Construction Performance Bond and Construction Labor and Material Payment Bond.
5. Ability to obtain required insurance with coverage values that meet minimum requirements.
6. Satisfactory experience on public works, including without limitation no history of default termination, excessively delayed completion, or excessive defective work.
7. Evidence that Bidder and its team, including without limitation its Electrical and Mechanical Subcontractor(s), or the Bidder to the extent Bidder performs such Work itself (hereafter "designated Subcontractor(s)"), have the human and physical resources of sufficient quantity and quality to perform the Work under Contract Documents in a timely and Specification-compliant manner, to include:
   a. Evidence demonstrating Bidder's commitment to project safety and its ability to complete projects in a safe manner.
   b. Construction and management organizations with sufficient personnel and requisite disciplines, licenses, skills, experience, and equipment for the Project.
   c. Minimum licensing requirements including evidence of a valid California class "B" contractor's license for the Bidder and evidence of requisite licenses for Key Personnel of Bidder or any designated Subcontractor.
   d. A field organization with skills, experience, and equipment sufficient to perform all on-Site Work and necessary scheduling.
   e. Expertise of Key Personnel to accomplish the duties and responsibilities required to perform the Work under Contract Documents. Minimum experience requirements of each Key Personnel include the completion of two projects of similar nature and complexity and three years of experience on projects of similar nature and complexity.
   f. Evidence that Bidder's named Electrical Subcontractor, or the Bidder to the extent Bidder performs such Work itself, has the human and physical resources of sufficient quantity and quality to perform those aspects of the Contract in a timely and Specification-compliant manner, to include:
      1) Within the past five years completed two construction projects of a similar nature and complexity with contract dollar amounts of at least $200,000 each.
   g. Evidence that Bidder's named Instrumentation Subcontractor, or the Bidder to the extent Bidder performs such Work itself, has the human and physical resources of sufficient quantity and quality to perform those aspects of the Contract in a timely and Specification-compliant manner, to include:
      1) Within the past five years completed two construction projects of a similar nature and complexity with contract dollar amounts of at least $30,000 each.
   h. Evidence that Bidder's named Mechanical Subcontractor has the human and physical resources of sufficient quantity and quality to perform those aspects of the Contract in a timely and Specification-compliant manner, to include:
      1) Within the past five years completed two construction projects of a similar nature and complexity with a contract dollar amount of at least $50,000 each. For a project to be considered of similar nature and complexity for this subparagraph, it must include providing a water source heat pump system for a minimum 1,000 square feet of conditioned building space comprising 5 tons of mechanical cooling for the building's HVAC system.
      2) Minimum licensing requirements including evidence of a valid California class "C-20" contractor's license.

i. Evidence that Bidder's Pre-Engineered Metal Building manufacturer has the human and physical resources of sufficient quantity and quality to perform those aspects of the Contract in a timely and Specification-compliant manner, to include:
   1) Accreditation under the International Accreditation Service, Inc., "Accreditation Criteria for Inspection Programs for Manufacturers of Metal Building Systems (AC472)."

21. BID EVALUATION. Owner may reject any or all Bids and waive any informalities or minor irregularities in the Bids. Owner also reserves the right, in its discretion, to reject any or all Bids and to re-Bid the Project. Owner reserves the right to reject any or all nonconforming, non-responsive, unbalanced, or conditional Bids, and to reject the Bid of any Bidder if Owner believes that it would not be in the best interest of Project to make an award to that Bidder, whether because the Bid is not responsive or the Bidder is unqualified or of doubtful financial ability or fails to meet any other pertinent standard or criteria established by Owner. For purposes of this paragraph, an "unbalanced Bid" is one having nominal prices for some Bid items and enhanced prices for other Bid items.

A. In evaluating Bids, Owner will consider Bidders' qualifications, whether or not the Bids comply with the prescribed requirements, unit prices, and other data, as may be requested in Document 00400 (Bid Form) or prior to the Notice of Award.
B. In order to evaluate Bidder's ability to perform and furnish the Work in accordance with the Contract Documents to Owner's satisfaction within the prescribed time, Owner may conduct reasonable investigations and reference checks of Bidder, proposed Subcontractors, suppliers and other persons and organizations as Owner deems necessary to assist in the evaluation of any Bid and to establish Bidder's responsibility, qualifications, financial ability, proposed Subcontractors, suppliers, and other persons and organizations. Submission of a Bid constitutes Bidder's consent to the foregoing. Owner shall have the right to consider information provided by sources other than Bidder. Owner shall also have the right to communicate directly with Bidder's surety regarding Bidder's bonds.
C. Discrepancies between the multiplication of units of Work and unit prices will be resolved in favor of the unit prices. Discrepancies between the indicated sum of any column of figures and the correct sum thereof will be resolved in favor of the correct sum. Discrepancies between written words and figures will be resolved in favor of the words.
D. Quantities stated in the Bidding Documents are approximate only and are subject to correction upon final measurement of the Work, and are subject further to the rights reserved by Owner to increase or diminish the amount of work under any classification as advantages to design or construction needs require.
E. Owner may determine whether a Bidder is qualified in its sole discretionary judgment.

22. BID PROTEST. Document 00505 (Notice of Intent to Award for Construction) will be posted at Owner's Office and in the main lobby of the County of Sonoma Administration Building, 575 Administration Drive, Santa Rosa, California. Any Bid protest must be submitted in writing to Owner (Attention: Contract Administration/Inspection), before 3:30 p.m. of the fifth Business Day following posting of Document 00505 (Notice of Intent to Award for Construction). Owner's staff will determine official time and will call out the specified time in the Bid reception area of Owner's Office, stating that the period for accepting Bid protests is closed. Owner will use reasonable efforts to deliver an electronic copy of Document 00505 (Notice of Intent to Award for Construction) to all Bidders who submitted Bids no later than the Business Day after issuance, although any delay or failure to do so will not extend the Bid protest deadline described above.

A. The initial protest document must contain a complete statement of the basis for the protest.
B. The protest must refer to the specific portion of the document that forms the basis for the protest.
C. The protest must include the name, address, and telephone number of the person representing the protesting party.
D. The party filing the protest must concurrently transmit a copy of the initial protest document and any attached documentation to all other parties with a direct financial interest that may be adversely affected by the outcome of the protest. Such parties shall include all other Bidders who appear to have a reasonable prospect of receiving an award depending upon the outcome of the protest.
E. The procedure and time limits set forth in this paragraph are mandatory and are Bidder's sole and exclusive remedy in the event of Bid protest. Bidder's failure to comply with these procedures shall constitute a waiver of any right to further pursue the Bid protest, including filing a Government Code Claim or legal proceedings. A Bidder may not rely on a protest submitted by another Bidder but must timely pursue its own protest.

23. **AWARD.** If the Contract is to be awarded, it will be awarded to the lowest responsible responsive Bidder. Following completion of all required Owner procedures and receipt of all Owner approvals, Owner will issue Document 00510 (Notice of Award) to successful Bidder.

24. **POST-NOTICE OF AWARD REQUIREMENTS.** After Notice of Award, the successful Bidder must execute and submit the following documents as indicated below.

A. Submit the following documents to Owner by 5:00 p.m. of the 20th Day following Notice of Award. Execution of Contract by Owner depends upon approval of these documents:
   1. Document 00520 (Agreement): To be executed by successful Bidder. Submit four originals, each bearing an original signature on the signature page and initials on each page.
   2. Document 00610 (Construction Performance Bond): To be executed by successful Bidder and surety, in the amount set forth in Document 00610 (Construction Performance Bond). Submit four originals. Liquidated Damages are described in Document 00520 (Agreement).
   3. Document 00620 (Construction Labor and Material Payment Bond): To be executed by successful Bidder and surety, in the amount set forth in Document 00620 (Construction Labor and Material Payment Bond). Submit four originals.
   4. Insurance certificates and endorsements required by Article 4 of Document 00700 (General Conditions). Submit one original set.
   5. One complete set of documentary information received or generated by successful Bidder in preparation of Bid prices for its Bid, as set forth in Document 00670 (Escrow Bid Documents).
   6. The Guaranty in the form set forth in Document 00630 (Guaranty). Submit four originals, each bearing an original signature.
B. Owner shall have the right to communicate directly with Apparent Low Bidder's proposed performance bond surety, to confirm the performance bond. Owner may elect to extend the time to receive faithful performance and labor and material payment bonds.
C. Successful Bidder's failure to submit the documents required herein, in a proper and timely manner, entitles Owner to rescind its award and to cause Bidder's Bid security to be forfeited as provided herein.

25. FAILURE TO EXECUTE AND DELIVER DOCUMENTS. If Bidder to whom Contract is awarded, within the period described in paragraph 24 of this Document 00200, fails or neglects to execute and deliver all required Contract Documents and file all required bonds, insurance certificates, and other documents, Owner may, in its sole discretion, foreclose on Bidder's surety bond, or deposit Bidder's cashier's check or certified check for collection, and retain the proceeds thereof as liquidated damages for Bidder's failure to enter into the Contract Documents. Bidder agrees that calculating the damages Owner may suffer as a result of Bidder's failure to execute and deliver all required Contract Documents would be extremely difficult and impractical and that the amount of Bidder's required Bid security shall be the agreed and presumed amount of Owner's damages. In addition, upon such failure, Owner may determine the next Apparent Low Bidder and proceed accordingly.

26. MODIFICATION OF COMMENCEMENT OF WORK. Owner expressly reserves the right to modify the date for the Commencement of Work under the Contract and to independently perform and complete work related to the Project. Owner accepts no responsibility to Contractor for any delays attributed to its need to complete independent work at the Site.

27. PUBLIC RECORDS ACT REQUESTS AND CONFIDENTIALITY WAIVER.

A. Per the Public Records Act, Owner will make available to the public Bidder's SOQ (if Bidder's Envelope "B" is opened), all correspondence and written questions submitted during the Bid period, all Bid submissions opened in accordance with the procedures of this Document 00200, and all subsequent Bid evaluation information. All submissions not opened will remain sealed and eventually be returned to the submitter. Except as otherwise required by law, Owner will not disclose proprietary financial information submitted that has been designated confidential by Bidder (including but not limited to audited financial statements and Part C, Financial Information in Bidder's SOQ. Any such proprietary financial information that a Bidder believes should be exempted from disclosure shall be specifically identified and marked as such. Blanket-type identification by designating whole pages or sections shall not be permitted and shall be invalid.

B. Upon a request for records regarding this Bid which specifically includes confidential information marked by Bidder in accordance with Paragraph A, above, Owner will notify Bidder within ten Days from receipt of the request. If Owner agrees that the information so marked is proprietary financial information exempt from disclosure, Owner shall refuse to disclose the information and Bidder shall take all appropriate legal action and defend Owner's refusal to produce the information in all forums. If Owner does not agree that the information so marked is exempt from disclosure, Owner will so notify Bidder of a specific time when, in response to the request, the records will be made available for inspection in accordance with the Public Records Act.

C. **By submitting a bid, Bidder shall be deemed to have waived any objections to the release of all other information and also to the release of any financial information that was not designated as confidential at the time the bid is submitted.**

28. CONFORMED PROJECT MANUAL. Following Award of Contract, Owner may prepare a conformed Project Manual reflecting Addenda issued during bidding, which will, failing objection, constitute the approved Project Manual.

29. DEFINITIONS. All abbreviations and definitions of terms used in this Document 00200 are set forth in Document 00700 (General Conditions) and Section 01420 (References and Definitions).

END OF DOCUMENT

DOCUMENT 00203

BID SUBMITTAL VICINITY MAP

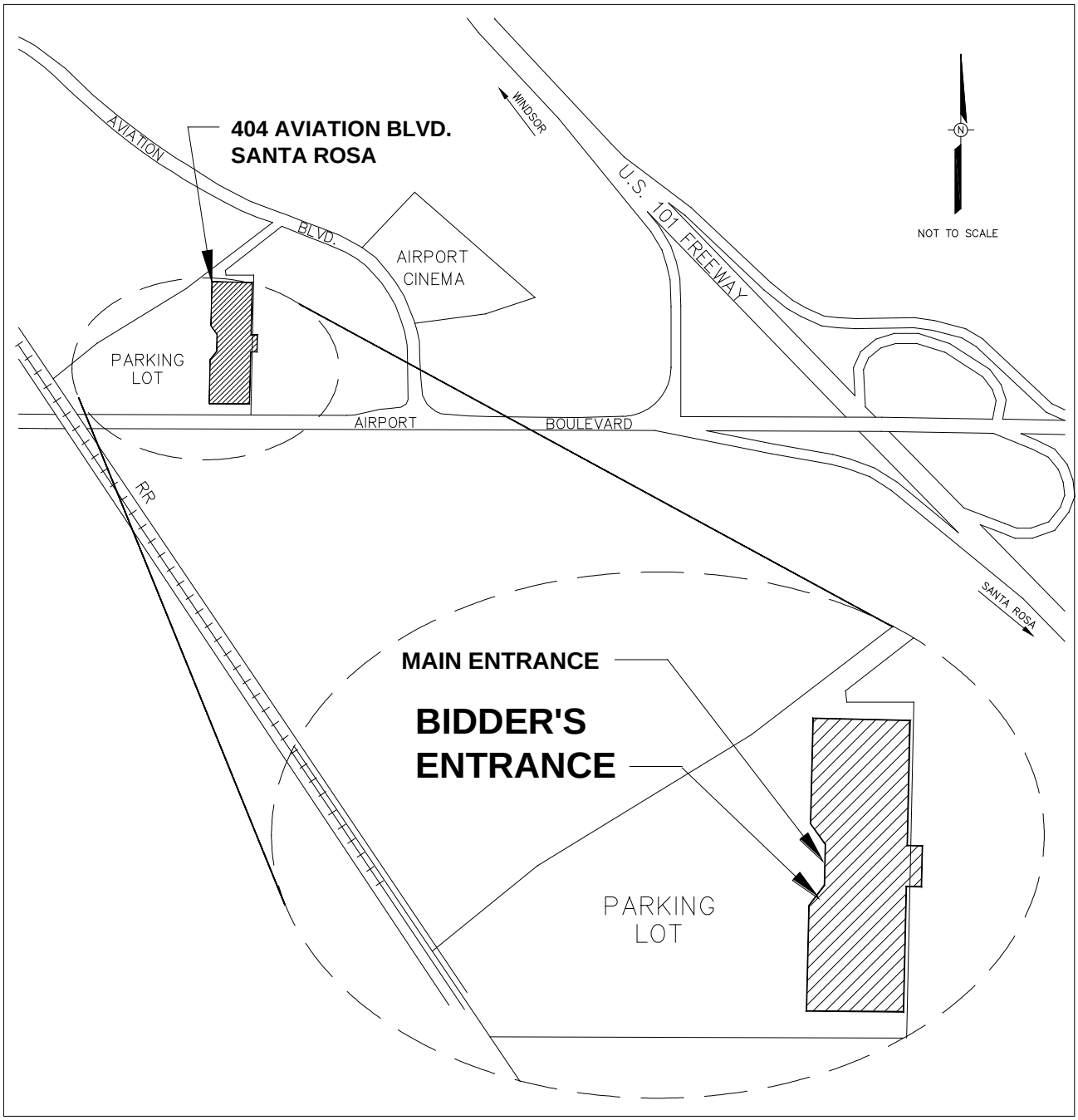

END OF DOCUMENT

DOCUMENT 00210

INDEMNITY AND RELEASE AGREEMENT

Dated _____

POTENTIAL BIDDER: _____

OWNER: SONOMA COUNTY WATER AGENCY

SITE: _____

PROJECT: SERVICE CENTER RELOCATION (2025 AVIATION BOULEVARD)

In consideration of the above-referenced Owner's permitting the undersigned potential bidder ("Bidder") to have access to, and to conduct investigations, tests and/or inspections on, the Site, Bidder hereby agrees as follows:

1. To the greatest extent permitted by law, Bidder hereby releases, and shall defend, indemnify and hold harmless Owner, and its officers, employees, consultants, representatives, and agents, and all other parties having any other interest in the Site, against any claim or liability, including attorney's fees, arising from or relating to any Site-related access, investigation, test, inspection and/or other activity conducted by Bidder or any of Bidder's officers, employees, consultants, representatives, and/or agents, regardless of whether claim or liability is caused in part by the negligence of Owner or by any released and indemnified party.

2. Bidder hereby waives the provisions of California Civil Code Section 1542 which provides as follows:

   > A general release does not extend to claims which the creditor does not know or suspect to exist in his favor at the time of executing the release, which if known by him, must have materially affected his settlement with the debtor.

3. Bidder shall repair any damage to the Site or adjacent property resulting from activities authorized hereunder, and return Site to its original condition as directed by Owner, and comply with and be subject to all other requirements and obligations described or referenced in Document 00320 (Geotechnical Data and Existing Conditions).

4. Attached hereto (or to be delivered separately before Bidder's visit to the Site) is a certificate for comprehensive general liability insurance satisfying the requirements of Document 00700 (General Conditions).

5. Although this Indemnity and Release Agreement is not a Contract Document (see Document 00520 [Agreement]), it shall be fully effective and binding regardless of whether Bidder submits a Bid for the subject Project, is awarded a contract for the Project, or otherwise.

_____
Name of Bidder

By: _____
Signature

Its: _____
Title (If Corporation: Chairman, President or Vice President)

By: _____
Signature

Its: _____
Title (If Corporation: Secretary, Assistant Secretary, Chief Financial Officer or Assistant Treasurer)

END OF DOCUMENT

DOCUMENT 00320

GEOTECHNICAL DATA AND EXISTING CONDITIONS

1. SUMMARY

A. This Document 00320 sets forth the terms and conditions under which Bidder may review, study, use, or rely upon geotechnical data at or contiguous to the Site, and existing conditions information concerning existing conditions and Underground Facilities at or contiguous to the Site. This Document 00320, the available geotechnical data, and the supplied existing conditions information are not Contract Documents.

2. REPORT AND INFORMATION

A. Existence of Reports. Owner, its consultants, and prior contractors may have collected documents providing a general description of the Site and conditions of the Work. These documents may consist of geotechnical reports for and around the Site, contracts, contract specifications, tenant improvement contracts, as-built drawings, utility drawings, and information regarding Underground Facilities. These reports, documents and other information are not part of the Contract Documents.

B. Inspection of Reports. Bidders may inspect geotechnical reports, documents, and information regarding existing conditions available at the Owner's Office, and may obtain copies at cost of reproduction and handling upon Bidder's payment for the costs. These reports, documents, and other information are not part of the Contract Documents. Nevertheless, by submitting a Bid, Bidder accepts full responsibility for reviewing, knowing and understanding the contents of all of these materials.

C. Inclusion in Project Manual. Geotechnical reports may be included in the Project Manual and information regarding existing conditions may also be included in the Project Manual, but neither shall be considered part of the Contract Documents.

D. Available Documentation. The following documentation is available for review for Contract Number 0-706-7 #01:

1. Preliminary Subsurface Investigation
   Airport-Larkfield-Wikiup Sanitation Zone
   Tertiary Treatment Plant Upgrade Project
   Sonoma County, California
   Taber Consultants – Engineers and Geologists
   July 7, 2000

3. USE OF INFORMATION ON EXISTING CONDITIONS

A. Aboveground Existing Conditions. Under no circumstances shall Owner be deemed to make a warranty or representation of existing aboveground conditions, as-built conditions, or other aboveground actual conditions verifiable by reasonable independent investigation. These conditions are verifiable by Bidder by the performance of its own independent investigation that Bidder must perform prior to bidding and Bidder must not rely on the information supplied by Owner regarding existing conditions. Bidder represents and agrees that in submitting its Bid, it is not relying on any information regarding existing conditions supplied by Owner.

B. Underground Facilities. Information supplied regarding existing Underground Facilities at or contiguous to the Site is based on information furnished to Owner by others (e.g., the owners or builders of such Underground Facilities or others). Except as expressly set forth

in this Document 00320, Owner does not assume responsibility for the accuracy, completeness or thoroughness of this information, and Bidder is solely responsible for any interpretation or conclusion drawn from this information. Except as expressly set forth in this Document 00320, Owner will be responsible only for the general accuracy of information regarding Underground Facilities, and only for those Underground Facilities that are owned by Owner. This express assumption of responsibility applies only if Bidder has conducted the independent investigation required of it and discrepancies were not apparent.

4. LIMITED RELIANCE PERMITTED ON CERTAIN GEOTECHNICAL INFORMATION

A. Geotechnical Data. Except as expressly set forth in this Document 00320, Owner does not warrant, and makes no representation regarding, the accuracy or thoroughness of any geotechnical data. Bidder represents and agrees that in submitting its Bid, it is not relying on any geotechnical data supplied by Owner, except as specifically set forth herein.

1. Bidder may rely upon the general accuracy of the "technical data" contained in the geotechnical reports and drawings identified above, but only insofar as it relates to subsurface conditions, provided Bidder has conducted the independent investigation required of it and discrepancies were not apparent. The term "technical data" in the referenced reports and drawings shall be limited as follows:
   a. The term "technical data" shall include actual reported depths, reported quantities, reported soil types, reported soil conditions, and reported material, equipment, or structures that were encountered during subsurface exploration.
   b. The term "technical data" does not include, and Bidder may not rely upon, any other data, interpretations, opinions or information shown or indicated in such drawings or reports that otherwise relate to subsurface conditions or described structures.
   c. The term "technical data" shall not include the location of Underground Facilities.
   d. Bidder may not rely on the completeness of reports and drawings for the purposes of bidding or construction. Bidder may rely upon the general accuracy of the "technical data" contained in such reports or drawings.
   e. Bidder is solely responsible for any interpretation or conclusion drawn from any "technical data" or any other data, interpretations, opinions, or information contained in supplied geotechnical data.

5. INVESTIGATIONS

A. Before submitting a Bid, each Bidder shall be responsible to obtain such additional or supplementary examinations, investigations, explorations, tests, studies and data concerning conditions (surface, subsurface, and Underground Facilities) at or contiguous to the Site or otherwise, which may affect cost, progress, performance or furnishing of Work or which relate to any aspect of the means, methods, techniques, sequences or procedures of construction to be employed by Bidder and safety precautions and programs incident thereto or which Bidder deems necessary to determine its Bid for performing and furnishing the Work in accordance with the time, price and other terms and conditions of Contract Documents. Bidders shall advise Owner in writing during the Bid period of any questions, suppositions, inferences or deductions Bidders may have for Owner's review and response.

B. Owner has provided time in the period prior to bidding for Bidder to perform these investigations.

6. ACCESS TO SITE FOR INVESTIGATIONS

A. During the Pre-Bid Site Visit(s), Owner will provide each Bidder access to the Site to conduct such examinations, investigations, explorations, tests, and studies, as each Bidder deems necessary for submission of a Bid. Bidders must fill all holes and clean up and restore the Site to its former conditions upon completion of such explorations, investigations, tests, and studies. Such investigations may be performed only under the provisions of Document 00200 (Instructions to Bidders) and Document 00700 (General Conditions) including, but not limited to, proof of insurance and obligation to indemnify against claims arising from such investigation work. Each Bidder shall supply all equipment required to perform any investigations as each Bidder deems necessary. Owner has the right to limit the number of pieces of machinery operating at one time due to safety concerns.

END OF DOCUMENT

DOCUMENT 00400

BID FORM

To be submitted as part of Envelope "A" by the time and date specified in Document 00200 (Instructions to Bidders), paragraph 1.

TO THE HONORABLE BOARD OF DIRECTORS OF THE SONOMA COUNTY WATER AGENCY

THIS BID IS SUBMITTED BY:

_____

(Firm/Company Name)

Re: CONTRACT NUMBER 0-706-7 #01, Service Center Relocation (2025 Aviation Boulevard)

1. The undersigned Bidder proposes and agrees, if this Bid is accepted, to enter into an agreement with the Sonoma County Water Agency, a public agency of the State of California ("Owner") in the form included in the Contract Documents, Document 00520 (Agreement), to perform and furnish all Work as specified or indicated in the Contract Documents for the Contract Sum and within the Contract Time indicated in this Bid and in accordance with all other terms and conditions of the Contract Documents.

2. Bidder accepts all of the terms and conditions of the Contract Documents, Document 00100 (Advertisement for Bids), and Document 00200 (Instructions to Bidders), including, without limitation, those dealing with the disposition of Bid Security. This Bid will remain subject to acceptance for 90 Days after the day of Bid opening.

3. In submitting this Bid, Bidder represents:

   (a) Bidder has examined all of the Contract Documents and all of the Addenda (receipt of all of which is hereby acknowledged). The Addenda are listed below.

Addendum Number	**Addendum Date**	**Signature of Bidder**

   (b) Bidder has visited the Site and performed all tasks, research, investigation, reviews, examinations, and analysis and given notices, regarding the Project and the Site, as set forth in Document 00520 (Agreement), Article 5.

(c) Bidder names the manufacturer of the following items, to be furnished under the Contract Documents:

	SECTION NUMBER	ITEM	MANUFACTURER
1.	13120	Pre-Engineered Metal Building	

(d) Bidder has given Owner prompt written notice of all conflicts, errors, ambiguities, or discrepancies that it has discovered in or among the Contract Documents and as-built drawings and actual conditions and the written resolution thereof through Addenda issued by Owner is acceptable to Contractor.

4. Based on the foregoing, Bidder proposes and agrees to fully perform the Work within the time stated and in strict accordance with the Contract Documents for the following sums of money listed in the following Schedule of Bid Prices:

SCHEDULE OF BID PRICES

All Bid items, including lump sums and unit prices, must be filled in completely. Bid items are described in Section 01100 (Summary of Work). Quote in figures only, unless words are specifically requested.

ITEM	DESCRIPTION	ESTIMATED QUANTITY	UNIT	UNIT PRICE	TOTAL
1.	Bonds	XXXXXX	Lump Sum	XXXXX	$
2.	Insurance	XXXXXX	Lump Sum	XXXXX	$
3.	Safety Program and Implementation	XXXXXX	Lump Sum	XXXXX	$
4.	Construction Material Waste Management Plan and Implementation	XXXXXX	Lump Sum	XXXXX	$
5.	Installation, Operation, and Maintenance Manuals	XXXXXX	Lump Sum	XXXXX	$
6.	Storm Water Pollution Prevention Plan	XXXXXX	Lump Sum	XXXXX	$
7.	New Service Center Building	XXXXXX	Lump Sum	XXXXX	$
8.	Existing Service Center Building Upgrades	XXXXXX	Lump Sum	XXXXX	$
9.	Sitework	XXXXXX	Lump Sum	XXXXX	$
10.	Grading and Paving	XXXXXX	Lump Sum	XXXXX	$

ITEM	DESCRIPTION	ESTIMATED QUANTITY	UNIT	UNIT PRICE	TOTAL
11.	Concrete Flatwork	XXXXXX	Lump Sum	XXXXX	$
12.	Signs and Striping	XXXXXX	Lump Sum	XXXXX	$
13.	Sanitary Sewer	XXXXXX	Lump Sum	XXXXX	$
14.	Plumbing	XXXXXX	Lump Sum	XXXXX	$
15.	Farms to Fuel Pipelines	XXXXXX	Lump Sum	XXXXX	$
16.	Mechanical Work	XXXXXX	Lump Sum	XXXXX	$
17.	Lighting System	XXXXXX	Lump Sum	XXXXX	$
18.	Data/Telecomm System	XXXXXX	Lump Sum	XXXXX	$
19.	Electrical	XXXXXX	Lump Sum	XXXXX	$
20.	Fire Protection System	XXXXXX	Lump Sum	XXXXX	$
21.	Access Control System	XXXXXX	Lump Sum	XXXXX	$
22.	Recycled Water System	XXXXXX	Lump Sum	XXXXX	$
23.	Mezzanine	XXXXXX	Lump Sum	XXXXX	$
24.	All Other Work	XXXXXX	Lump Sum	XXXXX	$
				TOTAL BID PRICE	$
25.	Contingency Reserve	XXXXXX	XXXXXX	XXXXX	$10,000.00
				TOTAL	$

Total: _____
(Words)

5. Subcontractors for work included in all Bid items are listed on the attached Document 00430 (Subcontractors List).

6. The undersigned Bidder understands that Owner reserves the right to reject this Bid.

7. If written notice of the acceptance of this Bid, hereinafter referred to as Notice of Award, is mailed or delivered to the undersigned Bidder within the time described in paragraph 2 of this Document 00400 or at any other time thereafter unless the Notice of Award is withdrawn, the undersigned Bidder will execute and deliver the documents required by Document 00200 (Instructions to Bidders) within the times specified therein. These documents include, but are not limited to, Document 00520 (Agreement), Document 00610 (Construction Performance Bond), and Document 00620 (Construction Labor and Material Payment Bond).

8. Notice of Award or request for additional information may be addressed to the undersigned Bidder at the address set forth below.

9. The undersigned Bidder herewith encloses cash, a cashier's check, or certified check of or on a responsible bank in the United States, or a corporate surety bond furnished by a surety authorized to do a surety business in the State of California, in form specified in Document 00200 (Instructions to Bidders), in the amount of ten percent (10%) of the Total Bid Price and made payable to "Sonoma County Water Agency."

10. The undersigned Bidder agrees to commence Work under the Contract Documents on the date established in Document 00700 (General Conditions) and to complete all work within the time specified in Document 00520 (Agreement). The undersigned Bidder acknowledges that Owner has reserved the right to delay or modify the commencement date. The undersigned Bidder further acknowledges Owner has reserved the right to perform independent work at the Site, the extent of such work may not be determined until after the opening of the Bids, and that the undersigned Bidder will be required to cooperate with such other work in accordance with the requirements of the Contract Documents.

11. The undersigned Bidder agrees that, in accordance with Document 00700 (General Conditions), liquidated damages for failure to complete all Work in the Contract within the time specified in Document 00520 (Agreement) shall be as set forth in Document 00520 (Agreement).

12. The names of all persons interested in the foregoing Bid as principals are:

(IMPORTANT NOTICE: If Bidder or other interested person is a corporation, give the legal name of corporation, state where incorporated, and names of president and secretary thereof; if a partnership, give name of the firm and names of all individual co-partners composing the firm; if Bidder or other interested person is an individual, give first and last names in full).

NAME OF BIDDER: _____
licensed in accordance with an act for the registration of Contractors, and with license number: _____ Expiration: _____.

_____ _____
Where incorporated, if applicable

_____

_____
Principals

I certify (or declare) under penalty of perjury under the laws of the State of California that the foregoing is true and correct.

_____
Signature of Bidder

_____
Date of Execution

_____
Place of Execution

NOTE: If Bidder is a corporation, set forth the legal name of the corporation together with the signature of the officer or officers authorized to sign contracts on behalf of the corporation. If Bidder is a partnership, set forth the name of the firm together with the signature of the partner or partners authorized to sign contracts on behalf of the partnership.

Business Address: _____
_____
_____

Contractor's Representative(s), (name, title): _____
_____

Officers authorized to sign contracts: _____
_____
_____

_____
Signature of Officer

_____
Title

_____
Date of Execution

_____
Place of Execution

Telephone Number(s): _____

Fax Number(s): _____

Email address(es): _____

Date of Bid: _____

END OF DOCUMENT

DOCUMENT 00411

BOND ACCOMPANYING BID

KNOW ALL BY THESE PRESENTS:

That the undersigned _____ [Name of Contractor] as Principal and the undersigned as Surety are held and firmly bound unto the SONOMA COUNTY WATER AGENCY, a public agency of the State of California ("Owner"), as obligee, in the penal sum of _____ _____ _____ Dollars ($_____) lawful money of the United States of America being at least ten percent (10%) of the aggregate amount of said Principal _____'s base Bid, for the payment of which, well and truly to be made, we bind ourselves, our successors, executors, administrators, and assigns, jointly and severally, firmly by these presents.

WHEREAS, the said Principal is submitting a Bid for Owner Contract Number #01, Center Relocation (2025 Aviation Boulevard).

THE CONDITION OF THIS OBLIGATION IS SUCH that if the Bid submitted by the said Principal be accepted and the Contract be awarded to said Principal and said Principal shall within the required periods enter into the Contract so awarded and provide the required Construction Performance Bond, Construction Labor and Material Payment Bond, insurance certificates, and all other endorsements, forms, and documents required under Document 00200 (Instructions to Bidders), then this obligation shall be void, otherwise to remain in full force and effect.

IN WITNESS WHEREOF, the above bounden parties have executed this instrument this _____ day of _____, 20_____, in _____, California.

(Corporate Seal)

By

_____

Principal

_____

Surety

(Corporate Seal)

By

_____

Attorney in Fact

(Evidence of execution shall be provided by Notarial Acknowledgement of the same, in accordance with California Civil Code section 1189, as amended January 1, 2008.)

END OF DOCUMENT

DOCUMENT 00420

BIDDER REGISTRATION FORM

INSTRUCTIONS

In order to register to undertake work for the Sonoma County Water Agency, Bidder must provide the following:

1) Fill out this registration form completely; do not leave blanks.
2) Provide certificates of insurance or a letter evidencing coverage complying with paragraph 4.2 of Document 00700 (General Conditions).

INDEPENDENT CONTRACTOR REGISTRATION

Contractor's License # _____

Date: _____ Fed I.D. # _____

Full Corporate Name of Company: _____

Street Address: _____

_____

Mailing Address: _____

_____

Phone: _____ Fax: _____

Name of Principal Contact: _____

Type of Business: _____ Sole Proprietor _____ Partnership
_____ Non-Profit 501 C3 _____ Corporation
_____ other (please explain:_____)

INSURANCE

Workers' Compensation:

Carrier: _____

Address: _____

Phone and Fax: _____

Policy Number: _____

General Liability:

Carrier: _____

Address: _____

Phone and Fax: _____

Policy Number: _____

Policy Limits: $ _____

A.M. Best Rating: _____

Automobile Liability:

Carrier: _____

Address: _____

Phone and Fax: _____

Policy Number: _____

Policy Limits: $ _____

A.M. Best Rating: _____

All-risk Course of Construction (if applicable, as required by Document 00800 [Supplementary Conditions]):

Carrier: _____

Address: _____

Phone and Fax: _____

Policy Number: _____

Policy Limits: $ _____

A.M. Best Rating: _____

Professional Liability (if applicable, as required by Document 00800 [Supplementary Conditions]):

Carrier: _____

Address: _____

Phone and Fax: _____

Policy Number: _____

Policy Limits: $ _____

A.M. Best Rating: _____

Environmental Impairment Liability (if applicable, as required by Document 00800 [Supplementary Conditions]):

Carrier: _____

Address: _____

Phone and Fax: _____

Policy Number: _____

Policy Limits: $ _____

A.M. Best Rating: _____

BIDDER CERTIFIES, UNDER PENALTY OF PERJURY, THAT THE FOREGOING INFORMATION IS CURRENT AND ACCURATE AND AUTHORIZES THE SONOMA COUNTY WATER AGENCY, AND ITS AGENTS AND REPRESENTATIVES TO OBTAIN A CREDIT REPORT AND/OR VERIFY ANY OF THE ABOVE INFORMATION.

_____
Signature

_____
Date

END OF DOCUMENT

DOCUMENT 00430

SUBCONTRACTORS LIST

Bidder submits the following information as to the subcontractors Bidder intends to employ if awarded the Contract.

Full Name of Subcontractor and Address of Mill or Shop	Description of Work: Reference To Bid Items	Subcontractor's License No.

(Bidder to attach additional sheets if necessary)

END OF DOCUMENT

DOCUMENT 00450

STATEMENT OF QUALIFICATIONS FOR CONSTRUCTION WORK

STATEMENT OF QUALIFICATIONS CHECKLIST

This checklist is for Bidder's convenience and lists some of the completed documents Bidder should ensure are submitted with Bidder's Statement of Qualifications.

- ☐ Letter of Assurance Regarding Performance and Payment Bonds (Document 00450, Attachment "A"). Modification of this form may result in rejection of the bid as non-responsive.
- ☐ Authorization to Contact Surety Form (Document 00450, Attachment "B")
- ☐ Statement of Qualifications Questionnaire (Document 00450, Attachment "C")
- ☐ Reviewed or audited financial statements for three years
- ☐ Technical Resources identification and description
- ☐ Résumés of Key Personnel
- ☐ Litigation History
- ☐ Cal/OSHA 300A log for 2010

(This page intentionally left blank)

1. REQUIRED CONTENTS OF SOQ SUBMISSION

A. Financial Capacity. Include audited or reviewed financial statements for the three most recently completed fiscal years for Bidder and each member of any proposed consortium or joint venture. Also include audited or reviewed financial statements for the three most recently completed fiscal years for any parent company(ies) of Bidder and each member of any proposed consortium or joint venture.

B. Capability to Provide Required Performance and Payment Bonds.
   1. Include a completed "Letter of Assurance Regarding Performance and Payment Bonds" from Bidder's Surety in the form attached to this Document 00450 as Attachment "A";
   2. Include a completed "Authorization to Contact Surety" from Bidder in the form attached to this Document 00450 as Attachment "B."

C. Human and Physical Resources. Identify, describe, and quantify for Bidder and separately for Bidder's "designated Subcontractor(s)" (as defined in Document 00200 Instructions to Bidders), the following technical resources for the Work:
   1. For products or materials listed in the "Major Products List" (see Section 01330 [Submittal Procedures]), provide description and location of manufacturing facilities, naming products and quantifying production capacity and current demand;
   2. Description of field organization(s), naming skills and equipment;
   3. Description of safety program, quality control procedures, and safety experience; and
   4. Evidence of a valid California contractor's license and required licenses of all persons who are Key Personnel of the Bidder or any designated Subcontractor.

D. Completed Questionnaire. Include a completed "Statement of Qualification Questionnaire" in the form attached to this Document 00450 as Attachment "C." Add supplementary information if necessary.

E. Resumes of Proposed Key Personnel. Include a resume for each named Key Personnel of Bidder, and Bidder's (including but not limited to the superintendent) designated Subcontractor(s), to include the following:
   1. Name and proposed assignment of Key Personnel - do not include home addresses or phone numbers;
   2. Years of experience;
   3. Education - degrees, schools, and years obtained;
   4. Professional registration(s);
   5. Fluency in English (Yes/No);
   6. Experience directly related to above proposed assignment;
   7. At least three client references, including contact names, addresses, and telephone numbers; and
   8. Description of experience requirements as required by Document 00200 (Instructions to Bidders).

F. Litigation History. Include a description of litigation history for the past five years, including names of involved parties, nature of dispute, and disposition.

2. GENERAL CONDITIONS

A. General Conditions for Content. The SOQ shall be clear and concise to enable management-oriented personnel to make a thorough evaluation and arrive at a sound determination as to whether the SOQ meets Owner's requirements. To this end, the SOQ should be so specific, detailed, and complete as to demonstrate clearly and fully that the Bidder has a thorough

understanding of and has demonstrated knowledge of the requirements to perform the Work (or applicable portion thereof).

B. Explanations to SOQ. Any explanation requested by a Bidder regarding the meaning or interpretation of this Document 00450 must be requested in writing in accordance with Document 00200 (Instructions to Bidders). Oral explanations or instructions will not be binding. Any information provided to any prospective Bidder concerning this Document 00450 will be furnished to all prospective Bidders as an Addendum to the Bidding Documents.

3. DEFINITIONS

A. Except as set forth herein, all abbreviations and definitions of terms used in this Document 00450 are as set forth in Document 00700 (General Conditions) or Section 01420 (References and Definitions).

LETTER OF ASSURANCE REGARDING PERFORMANCE AND PAYMENT BONDS, AUTHORIZATION TO CONTACT SURETY FORM, AND STATEMENT OF QUALIFICATION QUESTIONNAIRE FOLLOWS ON NEXT PAGE

ATTACHMENT "A" -- Letter of Assurance Regarding Performance and Payment Bonds

To Sonoma County Water Agency:

This letter is written by _____ [insert name of surety], a surety duly licensed to do business in the State of California, having a financial rating from A. M. Best Company of A or better. The purpose of this letter is to advise the Sonoma County Water Agency that this surety has agreed to provide _____ [insert name of Bidder] with the required performance and payment bonds in accordance with the requirements set forth in Documents 00610 (Construction Performance Bond) and 00620 (Construction Labor and Material Payment Bond) for the Service Center Relocation (2025 Aviation Boulevard), if the Bid submitted by said Bidder is accepted and the Contract is awarded to said Bidder. These performance and payment bonds shall be in the minimum penal sums provided therein.

_____
Signature of Surety's Authorized Representative

_____
Name and Title

_____
Date

ATTACHMENT "B" -- Authorization to Contact Surety

The Sonoma County Water Agency is hereby authorized to verify with the Surety identified in Attachment "A" that the Surety will, based upon Bid prices, issue the required bonds under the conditions stated in Attachment "A."

_____
Signature of Bidder's Authorized Representative

_____
Name and Title

_____
Date

ATTACHMENT "C" -- Statement of Qualification Questionnaire

Bidders shall complete the entire Statement of Qualification Questionnaire and submit it in accordance with Document 00200 (Instructions to Bidders) and this Document 00450. Failure to complete the questionnaire or inclusion of any false statement(s) shall be grounds for immediate disqualification. Label attachments with a reference to the related document, part, and question number.

CONTACT INFORMATION

Company Name: _____

Owner of Company: _____

Contact Person: _____

Address: _____

Phone: _____ Fax: _____

PART A: GENERAL INFORMATION

Complete Part A before proceeding to Part B.

1. Does Bidder possess a valid and current California Contractor's license for the Work proposed? Yes _____ No _____
2. Does Bidder have a minimum of $2,000,000 general liability insurance coverage? Yes _____ No _____
3. Has Bidder's license been suspended or revoked at any time in the last five years? Yes _____ No _____
4. Has Bidder been "default terminated" by an owner (other than for convenience), or has a Surety completed a contract for Bidder within the last five years? Yes _____ No _____
5. Labor Commissioner assessments or determination of ineligibility to bid:
   a. Has Bidder had a final civil wage and penalty assessment against it from the Labor Commissioner more than twice in the last five years? Yes _____ No _____
   b. Has Bidder been determined by the Labor Commissioner to be ineligible to bid on public contracts more than twice in the last five years? Yes _____ No _____

Bidder will be immediately disqualified if any answer to questions 1 or 2 above is No.
Bidder will be immediately disqualified if any answer to questions 3, 4, 5.a, or 5.b above is Yes.

PART B: SAFETY, PREVAILING WAGE, DISPUTES, AND BONDS

(SAFETY)

1. Cal/OSHA Citations and Penalties: Yes_____ No_____
If yes, please submit the following information to determine if Bidder meets the suggested safety criteria for this Project. Describe any Cal/OSHA citations and penalties that Bidder has received in the last three years. For each occurrence state whether the action by Cal/OSHA resulted in a citation, or a penalty, or both. Describe the activities that led to the action by Cal/OSHA. Provide dates, citation numbers, penalty amounts, and any other relevant information regarding the action by Cal/OSHA. Responses shall be machine written or neatly printed on company letterhead and signed by an officer of the company.

☐ Separate sheet attached.

2. Experience Modification Rates:
What were Bidder's Interstate Experience Modification Rates as established by the Workers' Compensation Insurance Rating Bureau for the following three years?

2008: _____
2009: _____
2010: _____

Average of last three years: _____ (no rounding)

If Bidder was not eligible to obtain a formal rating from the Workers' Compensation Insurance Rating Bureau for any of the years listed above, Bidder must submit written documentation from its workers' compensation insurance company that establishes what Bidder's equivalent experience modification rate would be.

If average of last three years is greater than 1.1, Bidder must provide an explanation here or as a separate attachment:

_____

_____

_____

3. Total Recordable Incident Rates (RIR):
What were Bidder's Total Recordable Incident Rates (RIR) for each of the last three complete years?

2008: _____
2009: _____
2010: _____

Average of last three years: _____ (no rounding)

4. Total Lost Time Incident Rates (LTIR):
What were Bidder's Total Lost Time Incident Rates (LTIR) for each of the last three complete years?

2008: _____
2009: _____
2010: _____

Average of last three years: _____ (no rounding)

5. State the name of Bidder's safety engineer/manager or Site Safety Officer: _____
Attach a resume or outline of this individual's safety and health qualifications and experience.

(PREVAILING WAGE PROVISIONS)

6. In the past five years, has Bidder been fined, penalized or otherwise found to have violated any prevailing wage or labor code provision? If yes, attach description of each occurrence.
Yes_____ No_____

(LICENSE PROVISIONS)

7. In the past five years, has Bidder changed names or license numbers? If so, please state reason for change and list previous name(s) and any previous license number for any of Bidder's principals.

Yes_____ No_____ Reason: _____

_____

Previous name(s) and license number(s): _____

_____

(DISPUTES)

8. In the past five years, has Bidder had any claims, litigation, or disputes resulting in mediation or arbitration, or termination for cause associated with any project? Yes _____ No _____
If yes, attach description of each such instance including details of total claim amount, settlement amount, and owner's name and phone number.

(BONDING)

9. Bonding Capacity - Provide documentation from Bidder's surety identifying the following:
Name of bonding company/surety: _____

Name of Surety Agent: _____

Surety Agent address: _____

Surety Agent phone number: _____

Is surety a California-admitted surety? Yes _____ No _____

Is surety listed in the current edition of the California Department of the Treasury's Listing of approved sureties? Yes _____ No _____

List surety's A.M. Best Rating: _____

What is Bidder's total bonding capacity? _____

What percentage rate does Bidder pay for bonds? _____

PART C: FINANCIAL INFORMATION

1. Has Bidder ever reorganized under the protection of the bankruptcy laws?
   Yes____ No _____ If yes, please state when _____

2. If Bidder has had the general liability carrier identified in Document 00420 (Bidder Registration Form) for less than five years, please provide additional information below for balance of the past five years.
   Agency Name: _____

   Contact Name: _____

   Phone Number: _____

   Carrier: _____ Dates: _____ A.M. Best Rating: _____

   Carrier: _____ Dates: _____ A.M. Best Rating: _____

   Carrier: _____ Dates: _____ A.M. Best Rating: _____

3. Has Bidder ever had insurance terminated by a carrier? Yes _____ No _____
   If yes, explain on separate signed sheet marked with correlating cross-reference to this paragraph of the questionnaire.

PART D: EXPERIENCE OF PRIME CONTRACTOR

The unique nature of this Project requires prior similar experience of the firm and the Key Personnel assigned. Summarize similar project experience below and provide the detailed project information requested:

Prime Contractor. List two construction projects of a similar nature and complexity, completed within the past five years, with a contract dollar amount of at least $800,000 each, and indicate who was the superintendent and Client's contact for each project.

Project	Construction Cost ($)	Year Completed	Name of Project Superintendent	Client's Contact Name and Phone Number
1.				
2.				

List years of experience as a continuously operating entity engaged in the performance of similar work (Five years required, minimum): _____

List Key Personnel who will be assigned to the Work:

Project Manager: _____

Project Superintendent: _____

Provide information about the two qualifying projects listed above. Names and references must be current and verifiable. If a separate sheet is used, it must contain all of the following information:

	Project 1	**Project 2**
Project Name		
Location		
Client		
Client Contact (name/phone #)		
Architect/Engineer (name/phone #)		
Construction Manager, Project Manager, or Superintendent (name/phone #)		
Project Description, Work Performed		
Total Construction Cost		
Total Change Order Amount		

	Project 1	**Project 2**
Original Scheduled Date of Completion		
Time Extensions Granted (number of Days)		
Actual Date of Completion		
Number of Stop Notices filed by subcontractors or suppliers		

PART E: EXPERIENCE OF DESIGNATED SUBCONTRACTOR(S)

The unique nature of this Project requires prior similar project experience of the designated Subcontractor(s), including the Bidder to the extent Bidder performs such Work itself, and the Key Personnel assigned. Summarize similar project experience below and provide the detailed project information requested:

Electrical Subcontractor. List two construction projects of a similar nature and complexity, completed within the past five years, with a contract dollar amount of at least $200,000 each, and indicate who were the superintendent and client's contact for each project.

Project	Construction Cost ($)	Year Completed	Name of Project Superintendent	Client's Contact Name/Phone Number
1.				
2.				

List Key Personnel that will be assigned to the Work:

Project Manager: _____

Project Superintendent: _____

Medium Voltage Cable Installation Supervisor**:** _____

Provide information about the two qualifying projects listed above. Names and references must be current and verifiable. If a separate sheet is used, it must contain all of the following information:

	Project 1	**Project 2**
Project Name		
Location		
Client		
Client Contact (name/phone #)		
Architect/Engineer (name/phone #)		
Construction Manager, Project Manager, or Superintendent (name/phone #)		
Project Description, Work Performed		
Total Construction Cost		
Total Change Order Amount		

	Project 1	**Project 2**
Original Scheduled Date of Completion		
Time Extensions Granted (number of Days)		
Actual Date of Completion		
Number of Stop Notices filed by subcontractors or suppliers		

Instrumentation Subcontractor. List two construction projects of a similar nature and complexity, completed within the past five years, with a contract dollar amount of at least $30,000 each, and indicate who were the superintendent and client's contact for each project.

Project	Construction Cost ($)	Year Completed	Name of Project Superintendent	Client's Contact Name/Phone Number
3.				
4.				

List Key Personnel that will be assigned to the Work:

Project Manager: _____

Project Superintendent: _____

PLC Control System Installation Supervisor: _____

PLC Control System Programmer: _____

Provide information about the two qualifying projects listed above. Names and references must be current and verifiable. If a separate sheet is used, it must contain all of the following information:

	Project 1	**Project 2**
Project Name		
Location		
Client		
Client Contact (name/phone #)		
Architect/Engineer (name/phone #)		
Construction Manager, Project Manager, or Superintendent (name/phone #)		
Project Description, Work Performed		
Total Construction Cost		
Total Change Order Amount		
Original Scheduled Date of Completion		
Time Extensions Granted (number of Days)		

	Project 1	**Project 2**
Actual Date of Completion		
Number of Stop Notices filed by subcontractors or suppliers		

Mechanical Subcontractor. List two construction projects of a similar nature and complexity, completed within the past five years, with a contract dollar amount of at least $50,000 each, each including providing a water source heat pump system for a minimum 1,000 square feet of conditioned building space comprising 5 tons of mechanical cooling for the building's HVAC system, and indicate who were the superintendent and client's contact for each project.

Project	Construction Cost ($)	Year Completed	Name of Project Superintendent	Client's Contact (name/phone #)
1.				
2.				

List Key Personnel that will be assigned to the Work:

Project Manager: _____

Project Superintendent: _____

Provide information about the two qualifying projects listed above. Names and references must be current and verifiable. If a separate sheet is used, it must contain all of the following information:

	Project 1	**Project 2**
Project Name		
Location		
Client		
Client Contact (name/phone #)		
Architect/Engineer (name/phone #)		
Construction Manager, Project Manager, or Superintendent (name/phone #)		
Project Description, Work Performed		
Total Construction Cost		
Total Change Order Amount		
Original Scheduled Date of Completion		
Time Extensions Granted (number of Days)		
Actual Date of Completion		
Number of Stop Notices filed by subcontractors or suppliers		

PART F: ADDITIONAL EXPERIENCE REQUIREMENTS

Experience of Manufacturer(s).

The pre-engineered metal building manufacturer shall have the human and physical resources of sufficient quantity and quality to perform those aspects of the Contract in a timely and Specification-compliant manner, to include:

Accreditation under the International Accreditation Service, Inc., "Accreditation Criteria for Inspection Programs for Manufacturers of Metal Building Systems (AC472)."

☐ Separate sheet attached showing evidence of accreditation.

BIDDER CERTIFIES, UNDER PENALTY OF PERJURY, THAT THE FOREGOING INFORMATION IS CURRENT AND ACCURATE AND AUTHORIZES THE SONOMA COUNTY WATER AGENCY, AND ITS AGENTS AND REPRESENTATIVES TO OBTAIN A CREDIT REPORT AND/OR VERIFY ANY OF THE ABOVE INFORMATION.

_____
SIGNATURE

_____
TITLE

END OF DOCUMENT

DOCUMENT 00481

NON-COLLUSION AFFIDAVIT
PUBLIC CONTRACT CODE §7106

NON-COLLUSION AFFIDAVIT TO BE EXECUTED BY BIDDER AND SUBMITTED WITH BID

STATE OF CALIFORNIA)
) ss.
COUNTY OF _____)

_____ [Name(s) of Principal(s) of Bidder], being first duly sworn, deposes and says that he/she/they is/are _____ [Office(s) of Affiant(s)] of _____ [Name of Bidder], the party making the foregoing Bid, that the Bid is not made in the interest of, or on behalf of, any undisclosed person, partnership, company, association, organization, or corporation; that the Bid is genuine and not collusive or sham; that Bidder has not directly or indirectly induced or solicited any other bidder to put in a false or sham Bid, and has not directly or indirectly colluded, conspired, connived or agreed with any bidder or anyone else to put in a sham Bid, or that anyone shall refrain from bidding, and that the Bidder has not in any manner, directly or indirectly, sought by agreement, communication or conference with anyone to fix the Bid price of Bidder or any other bidder, or to fix any overhead, profit or cost element of the Bid price, or of that of any other bidder, or to secure any advantage against the Sonoma County Water Agency, a public agency of the State of California, or anyone interested in the proposed contract; that all statements contained in the Bid are true; and further, that Bidder has not, directly or indirectly, submitted its Bid price or any breakdown thereof, or the contents thereof, or divulged information or data relative thereto, or paid, and will not pay, any fee to any corporation, partnership, company association, organization, Bid depository, or to any member or agent thereof to effectuate a collusive or sham Bid.

Executed under penalty of perjury under the laws of the State of California:

If Bidder is a partnership, joint venture, or corporation, at least two signatures are required. See reverse side for signature requirements.

_____ _____
(Name of Bidder) (Signature)

_____
(Second Signature if corporation/joint venture/ or partnership)

State of California

County of _____

Subscribed and sworn to (or affirmed) before me on this _____ day of _____, 20____, by _____, proved to me on the basis of satisfactory evidence to be the person(s) who appeared before me.

Notary Public Signature_____ (Seal)

(If Bidder is a partnership or a joint venture, this affidavit must be signed and sworn to by every member of the partnership or venture.)

(If Bidder [including any partner or venturer of a partnership or joint venture] is a corporation, this affidavit must be signed by the Chairman, President, or Vice President and by the Secretary, Assistant Secretary, Chief Financial Officer, or Assistant Treasurer.)

(If Bidder's affidavit on this form is made outside the State of California, the official position of the person taking such affidavit shall be certified according to law.)

END OF DOCUMENT

CONTRACTING REQUIREMENTS

DOCUMENT 00505

NOTICE OF INTENT TO AWARD FOR CONSTRUCTION

DATE POSTED: _____

CONTRACT NO.: 0-706-7 #01

PROJECT TITLE: Service Center Relocation (2025 Aviation Boulevard)

Grant Davis, the General Manager of the Sonoma County Water Agency, intends to recommend to the Board of Directors of the Sonoma County Water Agency the award of the above-referenced Project to

_____.
(Name of Contractor)

Grant Davis
General Manager

By: _____

_____
(Print name)

Title: _____

Date: _____

END OF DOCUMENT

DOCUMENT 00510

NOTICE OF AWARD

Dated _____

TO: _____

ADDRESS: _____

CONTRACT NO.: 0-706-7 #01

CONTRACT FOR:

SERVICE CENTER RELOCATION

(2025 AVIATION BOULEVARD)

The Contract Sum of your contract is _____ _____ Dollars ($_____).

1. Several copies of the proposed Contract Documents listed below accompany this Notice of Award.

2. You must comply with the following conditions precedent by 5:00 p.m. of the 20th Day following the date of this Notice of Award, that is, by _____, _____ [month day, 2011].

   a. Deliver to Owner four fully executed counterparts of Document 00520 (Agreement). Each copy of Document 00520 (Agreement) must bear your original signature on the signature page and your initials on each page.
   b. Deliver to Owner four originals of Document 00610 (Construction Performance Bond), executed by you and your surety.
   c. Deliver to Owner four originals of Document 00620 (Construction Labor and Material Payment Bond), executed by you and your surety.
   d. Deliver to Owner original set of the insurance certificates with endorsements required under Document 00700 (General Conditions).
   e. Deliver to Owner four original copies of Document 00630 (Guaranty), each executed by you.
   f. Deliver to Owner one complete set of the documentary evidence received or generated by you in preparation of Bid prices for this Contract, as set forth in Document 00670 (Escrow Bid Documents).

3. Failure to comply with these conditions within the time specified will entitle Owner to consider your Bid abandoned, to annul this Notice of Award, and to declare your Bid security forfeited.

4. Within 21 Days after you comply with the conditions in paragraph 2 of this Document 00510, Owner will return to you one fully signed counterpart of Document 00520 (Agreement) with ten copies of the Project Manual (including Specifications and Drawings) and five sets of full-size Drawings.

5. Attend a Post-Notice of Award Meeting at Owner's office. This meeting will be scheduled for approximately one week after this Notice of Award is issued.

6. Upon commencement of Work, you and each of your Subcontractors shall certify and provide to Owner copies of payroll records on forms provided by the Division of Labor Standards Enforcement, in accordance with Section 1776 of the California Labor Code.

SONOMA COUNTY WATER AGENCY
A Public Agency of the State of California ("Owner")

BY: _____
Grant Davis, General Manager

END OF DOCUMENT

DOCUMENT 00520

AGREEMENT

P/T#: 7449

THIS AGREEMENT, dated this ___ day of _____, 20__ , by and between _____ [Name of Contractor] whose place of business is located at _____ [Address of Contractor] ("Contractor"), and the SONOMA COUNTY WATER AGENCY ("Owner"), a public agency of the State of California acting under and by virtue of the authority vested in the Owner by the laws of the State of California.

Owner is currently pursuing ISO 9001 and ISO 14001 certification. ISO provides a program for documentation and consistent implementation of an organization's processes in order to ensure repeatability, accuracy, and predictability while achieving optimal customer satisfaction. ISO 9001 refers to Quality Management Systems (QMS) and ISO 14001 refers to Environmental Management Systems (EMS). The QMS focuses on business performance and achieving success, while the EMS focuses on reducing Owner's environmental impact. Owner has integrated the two management systems into one system referred to as Owner's EMS/QMS. Contract Documents contain information and requirements related to ISO.

WHEREAS, Owner, by its Board Action on the _____ day of _____ awarded to Contractor the following Contract:

CONTRACT NUMBER 0-706-7 #01
Service Center Relocation
(2025 Aviation Boulevard)

NOW, THEREFORE, in consideration of the mutual covenants hereinafter set forth, Contractor and Owner agree as follows:

Article 1. Work

1.1 Contractor shall complete all Work specified in the Contract Documents, in accordance with the Specifications, Drawings, and all other terms and conditions of the Contract Documents.

Article 2. Notices to Owner

2.1 Owner has designated Jim Flugum, Construction Management Section Manager, to act as Owner's Representative(s), who will represent Owner in performing Owner's duties and responsibilities and exercising Owner's rights and authorities in Contract Documents. Owner may change the individual(s) acting as Owner's Representative(s), or delegate one or more specific functions to one or more specific Owner's Representatives, including without limitation engineering, architectural, inspection and general administrative functions, at any time with notice and without liability to Contractor. Each Owner's Representative is the beneficiary of all Contractor obligations to Owner, including without limitation, all releases and indemnities.

2.2 Consulting Engineers:

2.2.1 Meline Engineering Corporation, PO Box 276665, Sacramento, CA 95827 9216 Kiefer Boulevard, Suite 6 Sacramento, CA 95826. Consulting Engineer's duties will include only mechanical submittal review and assistance to Owner with RFIs. Consulting Engineer has no authority to act on behalf of Owner, to stop Work, to interpret conditions of the Contract, or to give direction to Contractor.

2.2.2 Summit Engineering, 463 Aviation Blvd # 200, Santa Rosa, CA 95403-1092. Consulting Engineer's duties will include only structural submittal review and assistance to Owner with RFIs. Consulting Engineer has no authority to act on behalf of Owner, to stop Work, to interpret conditions of the Contract, or to give direction to Contractor.

2.2.3 Winzler and Kelly, Inc., 2235 Mercury Way, Suite #150, Santa Rosa, CA 95407. Consulting Engineer's duties will include only electrical structural submittal review and assistance to Owner with RFIs. Consulting Engineer has no authority to act on behalf of Owner, to stop Work, to interpret conditions of the Contract, or to give direction to Contractor.

2.3 Consultant: County of Sonoma Architect, 2300 County Center Drive Suite A220, Santa Rosa, CA 95403. Consultant's duties will include only submittal review and construction observation. Consultant has no authority to act on behalf of Owner, to stop Work, to interpret conditions of the Contract, or to give direction to Contractor.

2.4 All notices or demands to Owner under the Contract Documents shall be to Owner's Representative at:

Hard copies: 404 Aviation Blvd., Santa Rosa, California 95403-9019
Electronic: address to be provided to Contractor by Owner with Notice to Proceed

or to such other person(s) and address(es) as Owner shall provide to Contractor.

Article 3. Contract Time and Liquidated Damages

3.1 Contract Time.

Contractor shall commence Work on the date established in the Notice to Proceed. Owner reserves the right to modify or alter the Commencement Date of the Work.

Contractor shall achieve Substantial Completion of the entire Work within 270 Days from the date when the Contract Time commences to run as provided in Document 00700 (General Conditions). Contractor shall achieve Final Completion of the entire Work and be ready for Final Payment in accordance with Section 01770 (Contract Closeout) 300 Days from the date when the Contract Time commences to run as provided in Document 00700 (General Conditions).

3.2 Liquidated Damages.

Owner and Contractor recognize that time is of the essence of this Agreement and that Owner will suffer financial loss in the form of Contract administration expenses (such as Project management and consultant expenses), if all or any part of the Work is not completed within the times specified above, plus any extensions thereof allowed in accordance with the Contract Documents. Consistent with Article 15 of Document 00700 (General Conditions), Contractor

and Owner agree that because of the nature of the Project, it would be impractical or extremely difficult to fix the amount of actual damages incurred by Owner because of a delay in completion of all or any part of the Work. Accordingly, Owner and Contractor agree that as liquidated damages for delay Contractor shall pay Owner:

3.2.1 One thousand four hundred dollars ($1,400.00) for each Day that expires after the time specified herein for Contractor to achieve Substantial Completion of the entire Work, until achieved.

3.2.2 Six hundred dollars ($600.00) for each Day that expires after the time specified herein for Contractor to achieve Final Completion of the entire Work, until achieved.

These measures of liquidated damages shall apply cumulatively and except as provided below, shall be presumed to be the damages suffered by Owner resulting from delay in completion of the Work.

Liquidated damages for delay shall only cover administrative, overhead, interest on bonds, and general loss of public use damages suffered by Owner as a result of delay. Liquidated damages shall not cover the cost of completion of the Work, or other damages, including but not limited to damages resulting from Defective Work, lost revenues or costs of substitute facilities, penalties and other costs associated with violation of legal requirements or damages suffered by others who then seek to recover their damages from Owner (for example, delay claims of other contractors, subcontractors, tenants, or other third-parties), and defense costs thereof.

Article 4. Contract Sum

4.1 Owner shall pay Contractor the Contract Sum for completion of Work in accordance with Contract Documents as follows:

ITEM	DESCRIPTION	ESTIMATED QUANTITY	UNIT	UNIT PRICE	TOTAL
1.	Bonds	XXXXXX	Lump Sum	XXXXX	$
2.	Insurance	XXXXXX	Lump Sum	XXXXX	$
3.	Safety Program and Implementation	XXXXXX	Lump Sum	XXXXX	$
4.	Construction Material Waste Management Plan and Implementation	XXXXXX	Lump Sum	XXXXX	$
5.	Installation, Operation, and Maintenance Manuals	XXXXXX	Lump Sum	XXXXX	$
6.	Storm Water Pollution Prevention Plan	XXXXXX	Lump Sum	XXXXX	$

ITEM	DESCRIPTION	ESTIMATED QUANTITY	UNIT	UNIT PRICE	TOTAL
7.	New Service Center Building	XXXXXX	Lump Sum	XXXXX	$
8.	Existing Service Center Building Upgrades	XXXXXX	Lump Sum	XXXXX	$
9.	Sitework	XXXXXX	Lump Sum	XXXXX	$
10.	Grading and Paving	XXXXXX	Lump Sum	XXXXX	$
11.	Concrete Flatwork	XXXXXX	Lump Sum	XXXXX	$
12.	Signs and Striping	XXXXXX	Lump Sum	XXXXX	$
13.	Sanitary Sewer	XXXXXX	Lump Sum	XXXXX	$
14.	Plumbing	XXXXXX	Lump Sum	XXXXX	$
15.	Farms to Fuel Pipelines	XXXXXX	Lump Sum	XXXXX	$
16.	Mechanical Work	XXXXXX	Lump Sum	XXXXX	$
17.	Lighting System	XXXXXX	Lump Sum	XXXXX	$
18.	Data/Telecomm System	XXXXXX	Lump Sum	XXXXX	$
19.	Electrical	XXXXXX	Lump Sum	XXXXX	$
20.	Fire Protection System	XXXXXX	Lump Sum	XXXXX	$
21.	Access Control System	XXXXXX	Lump Sum	XXXXX	$
22.	Recycled Water System	XXXXXX	Lump Sum	XXXXX	$
23.	Mezzanine	XXXXXX	Lump Sum	XXXXX	$
24.	All Other Work	XXXXXX	Lump Sum	XXXXX	$
				TOTAL BID PRICE	$
25.	Contingency Reserve	XXXXXX	XXXXXX	XXXXX	$10,000.00
				TOTAL	$

Article 5. Contractor's Representations

In order to induce Owner to enter into this Agreement, Contractor makes the following representations and warranties:

5.1 Contractor has visited the Site and has examined thoroughly and understood the nature and extent of the Contract Documents, Work, Site, locality, actual conditions, as-built conditions, and all local conditions, and federal, state and local laws and regulations that in any manner may affect cost, progress, performance or furnishing of Work or which relate to any aspect of the means, methods, techniques, sequences or procedures of construction to be employed by Contractor and safety precautions and programs incident thereto.

5.2 Contractor has examined thoroughly and understood all reports of exploration and tests of subsurface conditions, as-built drawings, drawings, products specifications or reports, available for Bidding purposes, of physical conditions, including Underground Facilities, which are identified in Document 00320 (Geotechnical Data and Existing Conditions) or which may appear in the Drawings. Contractor accepts the determination set forth in these Documents and Document 00700 (General Conditions) of the limited extent of the information contained in such materials upon which Contractor may be entitled to rely. Contractor agrees that except for the information so identified, Contractor does not and shall not rely on any other information contained in such reports and drawings.

5.3 Contractor has conducted or obtained and has understood all such examinations, investigations, explorations, tests, reports and studies (in addition to or to supplement those referred to in Section 5.2 of this Document 00520) that pertain to the subsurface conditions, as-built conditions, Underground Facilities and all other physical conditions at or contiguous to the Site or otherwise that may affect the cost, progress, performance or furnishing of Work, as Contractor considers necessary for the performance or furnishing of Work at the Contract Sum, within the Contract Time and in accordance with the other terms and conditions of the Contract Documents, including specifically the provisions of Document 00700 (General Conditions); and no additional examinations, investigations, explorations, tests, reports, studies or similar information or data are or will be required by Contractor for such purposes.

5.4 Contractor has correlated its knowledge and the results of all such observations, examinations, investigations, explorations, tests, reports and studies with the terms and conditions of the Contract Documents.

5.5 Contractor has given Owner prompt written notice of all conflicts, errors, ambiguities, or discrepancies that it has discovered in or among the Contract Documents and as-built drawings and actual conditions and the written resolution thereof through Addenda issued by Owner is acceptable to Contractor.

5.6 Contractor is duly organized, existing and in good standing under applicable state law, and is duly qualified to conduct business in the State of California.

5.7 Contractor has duly authorized the execution, delivery and performance of this Agreement, the other Contract Documents and the Work to be performed herein. The Contract Documents do not violate or create a default under any instrument, agreement, order or decree binding on Contractor.

5.8 Contractor has listed the following Subcontractors pursuant to the Subcontractor Listing Law, California Public Contract Code §4100 *et seq.*:

Name of Subcontractor and Location of Mill or Shop	Description of Work: Reference To Bid Items	Subcontractor's License No.

5.9 Contractor has designated _____ [name], _____, [title] to act as Contractor's Representative(s), who will represent Contractor in performing Contractor's duties and responsibilities and exercising Contractor's rights and authorities in Contract Documents. Contractor may change the individual(s) acting as Contractor's Representative(s), or delegate one or more specific functions to one or more specific Contractor's Representatives, at any time with written notice and without liability to Owner, but Contractor is limited to two representatives.

Article 6. Contract Documents

6.1 Contract Documents consist of the following documents, including all changes, Addenda, and Modifications thereto:

Document 00510 Notice of Award
Document 00520 Agreement
Document 00550 Notice to Proceed
Document 00610 Construction Performance Bond
Document 00620 Construction Labor and Material Payment Bond
Document 00630 Guaranty
Document 00650 Agreement and Release of Any and All Claims
Document 00660 Substitution Request Form
Document 00670 Escrow Bid Documents
Document 00680 Escrow Agreement for Security Deposit in Lieu of Retention
Document 00700 General Conditions
Document 00800 Supplementary Conditions
Document 00910 Addenda
Specifications Divisions 1 through 16
Drawings listed in Drawing No. G-1, except Reference Drawings R-1, R-2, and R-3, which are not Contract Documents

6.2 There are no Contract Documents other than those listed in this Document 00520, Article 6. Document 00320 (Geotechnical Data and Existing Conditions), and the information supplied through this document, is not a Contract Document. The Contract Documents may only be amended, modified or supplemented as provided in Document 00700 (General Conditions).

Article 7. Miscellaneous

7.1 Terms and abbreviations used in this Agreement are defined in Document 00700 (General Conditions) and Section 01420 (References and Definitions) and will have the meaning indicated therein.

7.2 It is understood and agreed that in no instance are the persons signing this Agreement for or on behalf of Owner or acting as an employee, agent, or representative of Owner, liable on this Agreement or any of the Contract Documents, or upon any warranty of authority, or otherwise,

and it is further understood and agreed that liability of the Owner is limited and confined to such liability as authorized or imposed by the Contract Documents or applicable law.

7.3 Contractor shall not assign any portion of the Contract Documents, and may subcontract portions of the Contract Documents only in compliance with the Subcontractor Listing Law, California Public Contract Code §4100 *et seq*. This Contract shall not be assigned or transferred without approval of Owner's Board of Directors. Any such assignment or transfer without approval of Owner's Board of Directors shall be void and of no force and effect.

7.4 The Contract Sum includes all allowances (if any).

7.5 In entering into a public works contract or a subcontract to supply goods, services or materials pursuant to a public works contract, Contractor or Subcontractor offers and agrees to assign to the awarding body all rights, title and interest in and to all causes of action it may have under Section 4 of the Clayton Act (15 U.S.C. §15) or under the Cartwright Act (Chapter 2 (commencing with Section 16700) of Part 2 of Division 7 of the Business and Professions Code), arising from purchases of goods, services or materials pursuant to the public works contract or the subcontract. This assignment shall be made and become effective at the time Owner tenders final payment to Contractor, without further acknowledgment by the parties.

7.6 Copies of the general prevailing rates of per diem wages for each craft, classification, or type of worker needed to execute the Contract, as determined by Director of the State of California Department of Industrial Relations, are deemed included in the Contract Documents and on file at Owner's Office, and shall be made available to any interested party on request. Pursuant to Section 1861 of the Labor Code, Contractor represents that it is aware of the provisions of Section 3700 of the Labor Code which require every employer to be insured against liability for workers' compensation or to undertake self-insurance in accordance with the provisions of that Code, and Contractor shall comply with such provisions before commencing the performance of the Work of the Contract Documents.

7.7 Should any part, term or provision of this Agreement or any of the Contract Documents, or any document required herein or therein to be executed or delivered, be declared invalid, void or unenforceable, all remaining parts, terms and provisions shall remain in full force and effect and shall in no way be invalidated, impaired or affected thereby. If the provisions of any law causing such invalidity, illegality or unenforceability may be waived, they are hereby waived to the end that this Agreement and the Contract Documents may be deemed valid and binding agreements, enforceable in accordance with their terms to the greatest extent permitted by applicable law. In the event any provision not otherwise included in the Contract Documents is required to be included by any applicable law, that provision is deemed included herein by this reference (or, if such provision is required to be included in any particular portion of the Contract Documents, that provision is deemed included in that portion).

7.8 This Agreement and the Contract Documents shall be deemed to have been entered into in the County of Sonoma, State of California, and governed in all respects by California law (excluding choice of law rules). The exclusive venue for all disputes or litigation hereunder shall be in Sonoma County.

7.9 Contractor accepts the claims procedure established by Article 12 of Document 00700 (General Conditions), as established under Section 930.2 et seq. of the California Government Code.

/
/
/
/
/
/
/
/
/
/
/
/
/
/
/
/
/
/
/
/
/
/
/
/
/
/
/
/
/
/
/
/
/
/
/
/
/
/
/
/
/
/
/
/
/
/

IN WITNESS WHEREOF the parties have executed this Agreement in quadruplicate the day and year first above written.

Reviewed as to substance by Owner:

_____
Grant Davis, Agency's General Manager

Reviewed as to funds by Owner:

_____
Division Manager - Administrative Services

Reviewed as to form by County Counsel:

_____
County Counsel

Certificates of Insurance and are on file with and reviewed as to substance for Owner by:

_____
Contract Administration/Inspection Date

Attest:

_____
Clerk of the Board of Directors

CONTRACTOR:

_____
[Contractor's name]

By: _____
[Signature]

_____
[Please print name here]

Title: _____

[If Corporation: Chairman, President, or Vice President]

By: _____
[Signature]

_____
[Please print name here]

Title: _____
[If Corporation: Secretary, Assistant Secretary, Chief Financial Officer, or Assistant Treasurer]

OWNER:

SONOMA COUNTY WATER AGENCY, a Public Agency of the State of California

By: _____
Chair, Board of Directors

END OF DOCUMENT

DOCUMENT 00550

NOTICE TO PROCEED

Dated: _____, 20__

To: _____

_____
(Contractor)

Address: _____

_____

CONTRACT FOR: **CONTRACT NUMBER 0-706-7 #01**

You are notified that the Contract Time under the above Contract will commence to run on _____ 20___. On that date, you are to start performing your obligations with respect to Work under the Contract Documents. In accordance with Article 3 of Document 00520 (Agreement), the dates of Substantial Completion and Final Completion for the entire Work are _____, 20___ and _____, 20___, respectively.

In accordance with Article 11 of Document 00700 (General Conditions), on _____[date] you must submit preliminary schedules (Initial Schedule, Schedule of Submittals, and Schedule of Values).

In accordance with Section 01315 (Project Meetings), on _____ [date] you must attend a Schedule Review Meeting.

Before you may start any Work at the Site, you must:

1. Attend Preconstruction Conference
2. Submit approved fire protection plan, if applicable
3. Submit copies of applicable permits
4. Submit Construction Material Waste Management Plan
5. Submit and obtain favorable review of the following:
   - Certified Safety Program and related information
   - Storm Water Pollution Prevention Plan (SWPPP)

Work at the Site shall start no sooner than 150 Days after Contract Time commences to run.

From this date forward, submit one electronic copy and at least one hard copy of all Project documents, unless otherwise required by the Contract Documents. Submit electronic copies to: [email address].

Upon commencement of the Work, you and each of your Subcontractors shall certify and provide Owner copies of payroll records on forms provided by the Division of Labor Standards Enforcement, in accordance with Section 1776 of the California Labor Code.

SONOMA COUNTY WATER AGENCY,
A Public Agency of the State of California

By : _____

Its: _____

[Notice to be sent in manner required by Contract Documents]

END OF DOCUMENT

DOCUMENT 00610

CONSTRUCTION PERFORMANCE BOND
STANDARD EDITION

THIS CONSTRUCTION PERFORMANCE BOND ("Bond") dated _____, is in the penal sum of _____
_____
[which is one hundred percent of the Contract Sum], and is entered into by and between the parties listed below to ensure the faithful performance of the Construction Contract listed below. This Bond consists of this page and the Bond Terms and Conditions, paragraphs 1 through 12, attached to this page. Any singular reference to _____ [insert name of Contractor] ("Contractor"), _____ [insert name of Surety] ("Surety"), Sonoma County Water Agency, a public agency of the State of California ("Owner") or other party shall be considered plural where applicable.

CONTRACTOR:	SURETY:
_____	_____
Name	Name
_____	_____
Address	Principal Place of Business
_____	_____
City/State/Zip	City/State/Zip

CONSTRUCTION CONTRACT:

CENTER RELOCATION
(2025 AVIATION BOULEVARD)
CONTRACT NUMBER 0-706-7 #01

at Sonoma County, California

Signed_____, 20____ in the Amount of $_____ (the "Penal Sum")

CONTRACTOR AS PRINCIPAL	SURETY
Company: (Corp. Seal)	Company: (Corp. Seal)
Signature:_____	Signature: _____
Name and Title:_____	Name and Title:_____
_____	_____

BOND TERMS AND CONDITIONS

1. Contractor and Surety, jointly and severally, bind themselves, their heirs, executors, administrators, successors and assigns to Owner for the complete and proper performance of the Construction Contract, which is incorporated herein by reference.

2. If Contractor completely and properly performs all of its obligations under the Construction Contract, Surety and Contractor shall have no obligation under this Bond.

3. If there is no Owner Default, Surety's obligation under this Bond shall arise after:

   3.1 Owner has declared a Contractor Default under the Construction Contract pursuant to the terms of the Construction Contract; and

   3.2 Owner has agreed to pay the Balance of the Contract Sum:

      3.2.1 To Surety in accordance with the terms of this Bond and the Construction Contract; or

      3.2.2 To a contractor selected to perform the Construction Contract in accordance with the terms of this Bond and the Construction Contract.

4. When Owner has satisfied the conditions of paragraph 3, Surety shall promptly (within 30 Days) and at Surety's expense elect to take one of the following actions:

   4.1 Arrange for Contractor, with consent of Owner, to perform and complete the Construction Contract (but Owner may withhold consent, in which case the Surety must elect an option described in paragraphs 4.2, 4.3 or 4.4, below); or

   4.2 Undertake to perform and complete the Construction Contract itself, through its agents or through independent contractors; provided, that Surety may not select Contractor as its agent or independent contractor without Owner's consent; or

   4.3 Undertake to perform and complete the Construction Contract by obtaining bids from qualified contractors acceptable to Owner for a contract for performance and completion of the Construction Contract and, upon determination by Owner of the lowest responsive and responsible Bidder, arrange for a contract to be prepared for execution by Owner and the contractor selected with Owner's concurrence, to be secured with performance and payment bonds executed by a qualified surety equivalent to the bonds issued on the Construction Contract; and, if Surety's obligations defined in paragraph 6, below, exceed the Balance of the Contract Sum, then Surety shall pay to Owner the amount of such excess; or

   4.4 Waive its right to perform and complete, arrange for completion, or obtain a new contractor and with reasonable promptness under the circumstances and, after investigation and consultation with Owner, determine in good faith its monetary obligation to Owner under paragraph 6, below, for the performance and completion of the Construction Contract and, as soon as practicable after the amount is determined,

tender payment therefor to Owner with full explanation of the payment's calculation. If Owner accepts Surety's tender under this paragraph 4.4, Owner may still hold Surety liable for future damages then unknown or unliquidated resulting from the Contractor Default. If Owner disputes the amount of Surety's tender under this paragraph 4.4, Owner may exercise all remedies available to it at law to enforce Surety's liability under paragraph 6, below.

5. If Surety does not proceed as provided in paragraph 4, above, then Surety shall be deemed to be in default on this Bond ten Days after receipt of an additional written notice from Owner to Surety demanding that Surety perform its obligations under this Bond. At all times Owner shall be entitled to enforce any remedy available to Owner at law or under the Construction Contract including, without limitation, and by way of example only, rights to perform work, protect Work, mitigate damages, advance critical Work to mitigate schedule delay, or coordinate Work with other consultants or contractors.

6. Surety's monetary obligation under this Bond is limited by the amount of this Bond identified herein as the Penal Sum. This monetary obligation shall augment the Balance of the Contract Sum. Subject to these limits, Surety's obligations under this Bond are commensurate with the obligations of Contractor under the Construction Contract. Surety's obligations shall include, but are not limited to:

   6.1 The responsibilities of Contractor under the Construction Contract for completion of the Construction Contract and correction of Defective Work;

   6.2 The responsibilities of Contractor under the Construction Contract to pay liquidated damages, and for damages for which no liquidated damages are specified in the Construction Contract, actual damages caused by non-performance of the Construction Contract including, but not limited to, all valid and proper backcharges, offsets, payments, indemnities, or other damages;

   6.3 Additional legal, design professional and delay costs resulting from Contractor Default or resulting from the actions or failure to act of the Surety under paragraph 4, above (but excluding attorney's fees incurred to enforce this Bond).

7. No right of action shall accrue on this Bond to any person or entity other than Owner or its successors or assigns.

8. Surety hereby waives notice of any change, alteration or addition to the Construction Contract or to related subcontracts, purchase orders and other obligations, including changes of time. Surety consents to all terms of the Construction Contract, including provisions on changes to the Contract. No extension of time, change, alteration, Modification, deletion, or addition to the Contract Documents, or of the Work required thereunder, shall release or exonerate Surety on this Bond or in any way affect the obligations of Surety on this Bond.

9. Any proceeding, legal or equitable, under this Bond shall be instituted in any court of competent jurisdiction where a proceeding is pending between Owner and Contractor regarding the Construction Contract, or in the courts of the County of Sonoma, or in a court of competent jurisdiction in the location in which the Work is located. Communications from

Owner to Surety under paragraph 3.1 of this Bond shall be deemed to include the necessary agreements under paragraph 3.2 of this Bond unless expressly stated otherwise.

10. All notices to Surety or Contractor shall be mailed or delivered (at the address set forth on the signature page of this Bond), and all notices to Owner shall be mailed or delivered as provided in Document 00520 (Agreement). Actual receipt of notice by Surety, Owner or Contractor, however accomplished, shall be sufficient compliance as of the date received at the foregoing addresses.

11. Any provision in this Bond conflicting with any statutory or regulatory requirement shall be deemed deleted herefrom and provisions conforming to such statutory requirement shall be deemed incorporated herein.

12. Definitions.

    12.1 Balance of the Contract Sum: The total amount payable by Owner to Contractor pursuant to the terms of the Construction Contract after all proper adjustments have been made under the Construction Contract, for example, deductions for progress payments made, and increases/decreases for approved Modifications to the Construction Contract.

    12.2 Construction Contract: The agreement between Owner and Contractor identified on the signature page of this Bond, including all Contract Documents and changes thereto.

    12.3 Contractor Default: Material failure of Contractor, which has neither been remedied nor waived, to perform or otherwise to comply with the terms of the Construction Contract including, but not limited to, "default" or any other condition allowing a termination for cause as provided in Document 00700 (General Conditions).

    12.4 Owner Default: Material failure of Owner, which has neither been remedied nor waived, to pay Contractor progress payments due under the Construction Contract or to perform other material terms of the Construction Contract, if such failure is the cause of the asserted Contractor Default and is sufficient to justify Contractor termination of the Construction Contract.

END OF DOCUMENT

DOCUMENT 00620

CONSTRUCTION LABOR AND MATERIAL PAYMENT BOND
STANDARD EDITION

THIS CONSTRUCTION LABOR AND MATERIAL PAYMENT BOND ("Bond") is dated _____, is in the penal sum of _____
_____
[one hundred percent of the Contract Sum, and is entered into by and between the parties listed below to ensure the payment of claimants under the Construction Contract listed below. This Bond consists of this page and the Bond Terms and Conditions, paragraphs 1 through 13, attached to this page. Any singular reference to _____ [insert name of Contractor] ("Contractor"), _____ [insert name of Surety] ("Surety"), the Sonoma County Water Agency, a public agency of the State of California ("Owner") or other party shall be considered plural where applicable.

CONTRACTOR:	SURETY:
_____	_____
Name	Name
_____	_____
Address	Principal Place of Business
_____	_____
City/State/Zip	City/State/Zip

CONSTRUCTION CONTRACT:

CENTER RELOCATION
(2025 AVIATION BOULEVARD)
CONTRACT NUMBER 0-706-7 #01

at Sonoma County, California

Signed _____, 20____ in the Amount of $_____(the "Penal Sum")

CONTRACTOR AS PRINCIPAL	SURETY
Company: (Corp. Seal)	Company: (Corp. Seal)
Signature:_____	Signature: _____
Name and Title:_____	Name and Title:_____
_____	_____

BOND TERMS AND CONDITIONS

1. Contractor and Surety, jointly and severally, bind themselves, their heirs, executors, administrators, successors and assigns to Owner and to Claimants, to pay for labor, materials and equipment furnished for use in the performance of the Construction Contract, which is incorporated herein by reference.

2. With respect to Owner, this obligation shall be null and void if Contractor:

   2.1 Promptly makes payment, directly or indirectly, for all sums due Claimants; and

   2.2 Defends, indemnifies and holds harmless Owner from all claims, demands, liens or suits by any person or entity who furnished labor, materials or equipment for use in the performance of the Construction Contract, provided Owner has promptly notified Contractor and Surety (at the address set forth on the signature page of this Bond) of any claims, demands, liens or suits and tendered defense of such claims, demands, liens or suits to Contractor and Surety, and provided there is no Owner Default.

3. With respect to Claimants, this obligation shall be null and void if Contractor promptly makes payment, directly or indirectly through its Subcontractors, for all sums due Claimants. If Contractor or its Subcontractors, however, fail to pay any of the persons named in Section 3181 of the California Civil Code, or amounts due under the Unemployment Insurance Code with respect to Work or labor performed under the Contract, or for any amounts required to be deducted, withheld, and paid over to the Employment Development Department from the wages of employees of Contractor or Subcontractors pursuant to Section 13020 of the Unemployment Insurance Code, with respect to such Work and labor, then Surety shall pay for the same, and also, in case suit is brought upon this Bond, a reasonable attorney's fee, to be fixed by the court.

4. Consistent with the California Mechanic's Lien Law, Civil Code §3082, *et seq.*, Surety shall have no obligation to Claimants under this Bond unless the Claimant has satisfied all applicable notice requirements.

5. Surety's total obligation shall not exceed the amount of this Bond, and the amount of this Bond shall be credited for any payments made in good faith by Surety under this Bond.

6. Amounts due Contractor under the Construction Contract shall be applied first to satisfy claims, if any, under any Construction Performance Bond and second, to satisfy obligations of Contractor and Surety under this Bond.

7. Owner shall not be liable for payment of any costs, expenses, or attorney's fees of any Claimant under this Bond, and shall have under this Bond no obligations to make payments to, give notices on behalf of, or otherwise have obligations to Claimants under this Bond.

8. Surety hereby waives notice of any change, including changes of time, to the Construction Contract or to related subcontracts, purchase orders and other obligations. Surety further hereby stipulates and agrees that no change, extension of time, alteration or addition to the terms of the Construction Contract, or to the Work to be performed thereunder, or materials or

equipment to be furnished thereunder or the Specifications accompanying the same, shall in any way affect its obligations under this Bond, and it does hereby waive any requirement of notice or any such change, extension of time, alteration or addition to the terms of the Construction Contract or to the Work or to the Specifications or any other changes.

9. Suit against Surety on this Bond may be brought by any Claimant, or its assigns, at any time after the Claimant has furnished the last of the labor or materials, or both, but, per Civil Code §3249, must be commenced before the expiration of six months after the period in which stop notices may be filed as provided in Civil Code §3184.

10. All notices to Surety or Contractor shall be mailed or delivered (at the address set forth on the signature page of this Bond), and all notices to Owner shall be mailed or delivered as provided in Document 00520 (Agreement). Actual receipt of notice by Surety, Owner or Contractor, however accomplished, shall be sufficient compliance as of the date received at the foregoing addresses.

11. This Bond has been furnished to comply with the California Mechanic's Lien Law including, but not limited to, Civil Code §§3247, 3248, *et seq*. Any provision in this Bond conflicting with said statutory requirements shall be deemed deleted herefrom and provisions conforming to such statutory or other legal requirements shall be deemed incorporated herein. The intent is that this Bond shall be construed as a statutory bond and not as a common law bond.

12. Upon request by any person or entity appearing to be a potential beneficiary of this Bond, Contractor shall promptly furnish a copy of this Bond or shall permit a copy to be made.

13. Definitions.

    13.1.1 Claimant: An individual or entity having a direct contract with Contractor or with a Subcontractor of Contractor to furnish labor, materials or equipment for use in the performance of the Contract, as further defined in California Civil Code §3181. The intent of this Bond shall be to include without limitation in the terms "labor, materials or equipment" that part of water, gas, power, light, heat, oil, gasoline, telephone service or rental equipment used in the Construction Contract, architectural and engineering services required for performance of the Work of Contractor and Contractor's Subcontractors, and all other items for which a stop notice might be asserted. The term Claimant shall also include the Unemployment Development Department as referred to in Civil Code §3248(b).

    13.1.2 Construction Contract: The agreement between Owner and Contractor identified on the signature page of this Bond, including all Contract Documents and changes thereto.

    13.1.3 Owner Default: Material failure of Owner, which has neither been remedied nor waived, to pay the Contractor as required by the Construction Contract, provided that failure is the cause of the failure of Contractor to pay the Claimants and is sufficient to justify termination of the Construction Contract.

END OF DOCUMENT

DOCUMENT 00630

GUARANTY

To the SONOMA COUNTY WATER AGENCY, for construction of

CENTER RELOCATION
(2025 AVIATION BOULEVARD)

Sonoma County, California

The undersigned guarantees all construction performed on this Project and also guarantees all material and equipment incorporated therein.

Contractor hereby grants to Owner for a period of one year following the date of Final Acceptance of the Work completed, or such longer period specified in the Contract Documents, its unconditional warranty of the quality and adequacy of all of the Work including, without limitation, all labor, materials and equipment provided by Contractor and its Subcontractors of all tiers in connection with the Work.

Neither final payment nor use or occupancy of the Work performed by the Contractor shall constitute an acceptance of Work not done in accordance with this Guaranty or relieve Contractor of liability in respect to any express warranties or responsibilities for faulty materials or workmanship. Contractor shall remedy any defects in the Work and pay for any damage resulting therefrom, which shall appear within one year, or longer if specified, from the date of Final Acceptance of the Work completed.

If within one year after the date of Final Acceptance of the Work completed, or such longer period of time as may be prescribed by laws or regulations, or by the terms of Contract Documents, any Work is found to be Defective, Contractor shall promptly, without cost to Owner and in accordance with Owner's written instructions, correct such Defective Work. Contractor shall remove any Defective Work rejected by Owner and replace it with Work that is not Defective, and satisfactorily correct or remove and replace any damage to other Work or the work of others resulting therefrom. If Contractor fails to promptly comply with the terms of such instructions, or in an emergency where delay would cause serious risk of loss or damage, Owner may have the Defective Work corrected or the rejected Work removed and replaced. Contractor shall pay for all claims, costs, losses and damages caused by or resulting from such removal and replacement. Where Contractor fails to correct Defective Work, or defects are discovered outside the correction period, Owner shall have all rights and remedies granted by law.

Inspection of the Work shall not relieve Contractor of any of its obligations under the Contract Documents. Even though equipment, materials, or Work required to be provided under the Contract Documents have been inspected, accepted, and estimated for payment, Contractor shall, at its own expense, replace or repair any such equipment, material, or Work found to be Defective or otherwise not to comply with the requirements of the Contract Documents up to the end of the guaranty period.

All abbreviations and definitions of terms used in this Agreement shall have the meanings set forth in the Contract Documents, including, without means of limitation, Document 00700 (General Conditions) and Section 01420 (References and Definitions).

The foregoing Guaranty is in addition to any other warranties of Contractor contained in the Contract Documents, and not in lieu of, any and all other liability imposed on Contractor under the Contract Documents and at law with respect to Contractor's duties, obligations, and performance under the Contract Documents. In the event of any conflict or inconsistency between the terms of this Guaranty and any warranty or obligation of the Contractor under the Contract Documents or at law, such inconsistency or conflict shall be resolved in favor of the higher level of obligation of the Contractor.

_____
[Contractor's name]

By: _____
[Signature]

_____
[Please print name here]

Title: _____

Business Address:_____
_____
_____

Date: _____

END OF DOCUMENT

DOCUMENT 00650

AGREEMENT AND RELEASE OF ANY AND ALL CLAIMS

THIS AGREEMENT AND RELEASE OF ANY AND ALL CLAIMS ("Agreement and Release"), made and entered into this _____ [date] day of _____ [month], _____ [year], by and between the Sonoma County Water Agency, a public agency of the State of California ("Owner"), and _____ [name of Contractor] ("Contractor"), whose place of business is at _____ _____ [address of Contractor].

RECITALS

A. Owner and Contractor entered into Contract Number 0-706-7 #01 (the "Contract").

B. The Work under the Contract has been completed.

Now, therefore, it is mutually agreed between Owner and Contractor as follows:

AGREEMENT

1. Contractor will not be assessed liquidated damages except as detailed below:

Original Contract Sum	$ _____
Modified Contract Sum	$ _____
Payment to Date	$ _____
Liquidated Damages	$ _____
Payment Due Contractor	$ _____

2. Subject to the provisions of this Agreement and Release, Owner will forthwith pay to Contractor the sum of $_____ Dollars and _____ Cents ($_____) under the Contract, less any amounts withheld under the Contract or represented by any Notice to Withhold Funds on file with Owner as of the date of such payment.

3. Contractor acknowledges and hereby agrees that there are no unresolved or outstanding claims in dispute against Owner arising from the Contract, except for the claims described in paragraph 4 of this Document 00650. It is the intention of the parties in executing this Agreement and Release that this Agreement and Release shall be effective as a full, final and general release of all claims, demands, actions, causes of action, obligations, costs, expenses, damages, losses and liabilities of Contractor against Owner, and all of its agents, employees, consultants, inspectors, representatives, assignees and transferees, except for the Disputed Claims set forth in paragraph 4 of this Document 00650. Nothing in this Agreement and Release shall limit or modify Contractor's continuing obligations described in paragraph 6 of this Document 00650.

4. The following claims submitted under Document 00700 (General Conditions), Article 12, are disputed (hereinafter, the "Disputed Claims") and are specifically excluded from the operation of this Agreement and Release:

Claim No.	Date Submitted	Description of Claim	Amount of Claim

[Insert information, including attachment if necessary]

5. Consistent with California Public Contract Code Section 7100, Contractor hereby agrees that, in consideration of the payment set forth in paragraph 2 of this Document 00650, Contractor hereby releases and forever discharges Owner, and all of its agents, employees, consultants, inspectors, assignees and transferees from any and all liability, claims, demands, actions or causes of action of whatever kind or nature arising out of or in any way concerned with the Work under the Contract.

6. Guarantees and warranties for the Work, and any other continuing obligation of Contractor, shall remain in full force and effect as specified in the Contract Documents.

7. Contractor shall immediately defend, indemnify and hold harmless Owner, any Owner's Representatives, Engineer, and all of their agents, employees, consultants, inspectors, assignees and transferees, from any and all claims, demands, actions, causes of action, obligations, costs, expenses, damages, losses and liabilities that may be asserted against them by any of Contractor's suppliers and/or Subcontractors of any tier and/or any suppliers to them for any and all labor, materials, supplies and equipment used, or contemplated to be used in the performance of the Contract, except for the Disputed Claims set forth in paragraph 4 of this Document 00650.

8. Contractor hereby waives the provisions of California Civil Code Section 1542, which provide as follows:

> A general release does not extend to claims which the creditor does not know or suspect to exist in his favor at the time of executing the release,

which if known by him, must have materially affected his settlement with the debtor.

9. The provisions of this Agreement and Release are contractual in nature and not mere recitals and shall be considered independent and severable, and if any such provision or any part thereof shall be at any time held invalid in whole or in part under any federal, state, county, municipal or other law, ruling, or regulation, then such provision, or part thereof shall remain in force and effect only to the extent permitted by law, and the remaining provisions of this Agreement and Release shall also remain in full force and effect, and shall be enforceable.

10. Contractor represents and warrants that it is the true and lawful owner of all claims and other matters released pursuant to this Agreement and Release, and that it has full right, title and authority to enter into this instrument. Each party represents and warrants that it has been represented by counsel of its own choosing in connection with this Agreement and Release.

11. All rights of Owner shall survive completion of the Work or termination of the Contract, and execution of this Agreement and Release.

* * * CAUTION: THIS IS A RELEASE - READ BEFORE EXECUTING * * *

SONOMA COUNTY WATER AGENCY,
A Public Agency of the State of California

By: _____

Its: _____

ATTEST:

_____
Clerk of the Board of Directors

[CONTRACTOR]

By: _____

Name: _____

Its: _____

By: _____

Name: _____

Its: _____

REVIEWED AS TO FORM:

_____
County Counsel

_____, 20 _____

END OF DOCUMENT

DOCUMENT 00660

SUBSTITUTION REQUEST FORM

During Bid Period To:	After Award of Contract To:
Dennis Daly Sonoma County Water Agency Fax: 707-524-3782	Construction Management Section Sonoma County Water Agency Fax: 707-524-3791

Project: Service Center Relocation (2025 Aviation Boulevard)

Bidder: _____

Subcontractor/Supplier: _____

Drawing Sheet Reference/Detail No: _____

The undersigned Bidder submits for consideration the following equipment instead of the specified item for the above Project:

Section	Paragraph	Specified Item
_____	_____	_____
_____	_____	_____

Proposed Substitution: _____

_____

The undersigned encloses the information required herein. If this Document 00660 is being submitted by a Bidder wishing to use "equal" item(s) as provided in Document 00200 (Instructions to Bidders), the undersigned Bidder must also enclose the technical information (other than cost) otherwise required for a post-Award of Contract Request for Substitution ("RFS") under Section 01600 (Product Requirements). However, if this Document 00660 is being submitted under provisions of Contract Documents after Award of Contract, the undersigned Contractor must include all information required under Section 01600 (Product Requirements).

The undersigned has (a) attached manufacturer's literature, including complete technical data and laboratory test results, if applicable, (b) attached an explanation of why proposed substitution is a true equivalent to specified item, (c) included complete information on changes to Contract Documents that the proposed substitution will require for its proper installation, and (d) filled in the blanks below:

A. Does the substitution affect dimensions shown on Drawings? (If yes, please explain)

_____

B. Are the manufacturer's guarantees and warranties on the proposed substitution items identical to those on the specified items? If there are differences, please specify each and every difference in detail.

_____

C. What effect does the substitution have on other contractors, trades, or suppliers?

_____

D. What are the differences between the proposed substitution and the specified item? If proposed substitution has a color or pattern, provide a color board showing proposed substitution in relation to the other adjacent colors and patterns.

_____

E. Will granting the requested substitution cause any schedule delay? (If yes, please explain)

_____

The undersigned Bidder certifies that the function, appearance, and quality of the proposed substitution are equivalent or superior to those of the specified item.

Submitted by:

_____
Bidder

_____
Signature

_____
Name

_____
Address

_____
City/State/Zip

Telephone: _____

Date: _____

For Use by Owner:

___ Accepted _____Accepted as Noted

___ Not Accepted _____Received Too Late

By: _____
Owner's Representative

Date: _____

Remarks: _____

_____

_____

_____

END OF DOCUMENT

DOCUMENT 00670

ESCROW BID DOCUMENTS

1. Requirements for Escrow Bid Documents.

   a. Within the time period established in Document 00200 (Instructions to Bidders), Contractor shall submit to Owner a set of Escrow Bid Documents as defined in paragraph 2 below. Escrow Bid Documents will be used only in the manner and for the purposes described in this Document 00670.

   b. The submission of the Escrow Bid Documents, as with the bonds and insurance documents required under Document 00200 (Instructions to Bidders), is considered an essential part of the Contract award. Should Contractor fail to make the submission within the allowed time specified, Contractor may be deemed to have failed to enter into the Contract, Contractor shall forfeit the amount of its Bid security accompanying Contractor's Bid, and Owner may award the Contract to the next lowest responsive responsible Bidder.

   c. NO PAYMENTS WILL BE MADE, NOR WILL OWNER ACCEPT CHANGE ORDER REQUESTS UNTIL THE ABOVE-REQUIRED INFORMATION IS SUBMITTED AND APPROVED. ALTERNATIVELY, OWNER MAY DECLARE THE BID NON-RESPONSIVE.

   d. Contractor shall submit the Escrow Bid Documents, in person by an authorized representative of the Contractor, to:

      Construction Management Section
      Sonoma County Water Agency
      404 Aviation Boulevard
      Santa Rosa, California

2. Scope of Escrow Bid Documents.

   a. Within the time period specified in Document 00200 (Instructions to Bidders), Contractor shall submit one copy of all documentary information received or generated by Contractor in preparation of Bid prices for the Contract Documents, as specified in paragraphs 5 and 6 of this Document 00670. This material is referred to in this Document 00670 as the "Escrow Bid Documents." Contractor's Escrow Bid Documents will be held in escrow as provided in this Document 00670.

   b. Contractor represents and agrees, as a condition of award of the Contract, that the Escrow Bid Documents constitute all written information used in the preparation of its Bid, and that no other written Bid preparation information shall be considered in resolving disputes or claims or may be considered in legal proceedings. Contractor also agrees that nothing in the Escrow Bid Documents shall change or modify the terms or conditions of the Contract Documents. Contractor is advised that the Escrow Bid Documents will only be used as a guide in the resolution of disputes and claims.

3. Ownership of Escrow Bid Documents.

   a. The Escrow Bid Documents are, and shall always remain, the property of Contractor, subject to joint review by Owner and Contractor, as provided in this Document 00670.

   b. Owner stipulates and expressly acknowledges that the Escrow Bid Documents constitute trade secrets. This acknowledgement is based on Owner's express understanding that the information contained in the Escrow Bid Documents is not known outside Contractor's business, is known only to a limited extent and only by a limited number of Contractor's Employees, is safeguarded while in Contractor's possession, is extremely valuable to Contractor and could be extremely valuable to Contractor's competitors by virtue of it reflecting Contractor's contemplated construction techniques. Owner further acknowledges that the Escrow Bid Documents and the information contained in them are made available to Owner only because such action is an express pre-requisite to award of the Contract. Owner agrees to safeguard the Escrow Bid Documents, and all information contained in them, against disclosure to the fullest extent permitted by law, consistent with paragraph 4 of this Document 00670.

4. Escrow Bid Documents may be used in the determination of price adjustments and Change Orders and in the settlement of disputes and claims. If used in legal proceedings, Escrow Bid Documents shall be subject to an appropriate protective order limiting their disclosure.

5. Format and Contents of Escrow Bid Documents.

   a. Contractor may submit Escrow Bid Documents in their usual cost-estimating format; a standard format is not required. Contractor shall prepare and submit the Escrow Bid Documents in English.

   b. Owner requires Contractor to itemize clearly in the Escrow Bid Documents the estimated costs of performing the Work of each Bid item contained in Contractor's Bid. Contractor shall separate Bid items into sub-items as required to present a detailed cost estimate and allow a detailed cost review. The Escrow Bid Documents shall include all Subcontractor bids or quotes, supplier bids or quotes, quantity take-offs, crews, equipment, calculations of rates of production and progress, copies of quotes from Subcontractors and suppliers, and memoranda, narratives, add/deduct sheets, and all other information used by Contractor to arrive at the prices contained in the Bid. Escrow Bid Documents shall include costs of scheduled maintenance, depreciation, fleet rental expense discounts and incentives, and similar cost adjustments if used by Contractor to calculate its Bid prices. Estimated costs shall be broken down into Contractor's usual estimate categories such as direct labor, repair labor, equipment ownership and operation, expendable materials, permanent materials and subcontract costs as appropriate. Plant and equipment and indirect costs should be detailed in Contractor's usual format. Contractor shall identify its allocation of indirect costs, contingencies, markup and other items to each Bid item.

   c. Contractor shall identify all costs. For Bid items amounting to less than $10,000, Contractor may estimate costs without a detailed cost estimate, provided that Contractor includes applicable labor, equipment, materials and subcontracts, and allocates applicable indirect costs, contingencies and markup.

d. Bid documents provided by Owner should not be included in the Escrow Bid Documents unless needed to comply with these requirements.

6. Submittal of Escrow Bid Documents.

a. Submit Escrow Bid Documents in a container clearly marked on the outside with Contractor's name, date of submittal, Project name and the words "Escrow Bid Documents - Open only in the presence of Authorized Representatives of both Owner and Contractor." Owner will review the Escrow Bid Documents for initial compliance. Owner has three Days after receipt of Bidder's Escrow Bid Documents to demand additional information.

b. By submitting Escrow Bid Documents, Contractor represents that the material in the Escrow Bid Documents constitutes all the documentary information used in preparation of the Bid and that Contractor has personally examined the contents of the Escrow Bid Documents container and has found that the documents in the container are complete. Contractor agrees that it will not introduce or rely on any other documents to prove how it prepared its Bid.

c. If Contractor's Bid is based upon subcontracting any part of the Work, each Subcontractor whose total subcontract price exceeds five percent of the total Contract Sum proposed by Contractor, shall provide separate Escrow Documents to be included with those of Contractor. Such documents shall be opened and examined in the same manner and at the same time as the examination described above for Contractor.

d. If Contractor wishes to subcontract any portion of the Work after award, Owner retains the right to require Contractor to submit Escrow Documents for the Subcontractor before approval of the subcontract.

7. Storage, Examination, and Final Disposition of Escrow Bid Documents.

a. The Escrow Bid Documents will be placed in escrow until Final Completion of Work on the Project, in a mutually agreeable institution. Contractor shall pay the cost of storage for the Escrow Bid Documents until that time. The storage facilities shall be the appropriate size for all the Escrow Bid Documents and located conveniently to both Owner's and, to the extent reasonably possible, Contractor's offices, but in no event outside the County of Sonoma.

b. Both Owner and Contractor shall examine the Escrow Bid Documents, at any time deemed necessary by either Owner or Contractor, to assist in the negotiation of price adjustments and Change Orders or the settlement of disputes and claims. Examination of the Escrow Bid Documents is subject to the following conditions:

i. As trade secrets, the Escrow Bid Documents are proprietary and confidential under paragraph 3.b. of this Document 00670.

ii. Owner and Contractor (and any Subcontractor, to the extent Escrow Bid Documents are required by a Subcontractor) shall each designate in writing to the other party(s) at least seven Days prior to any examination, representatives who are authorized to

examine the Escrow Bid Documents. Except as otherwise provided in a court order, no other persons shall have access to the Escrow Documents.

iii. Except as otherwise provided in a court order, access to the documents may take place only in the presence of duly designated representatives of both Owner and Contractor. If Contractor fails to designate a representative or appear for joint examination on seven Days' notice, then Owner's Representative may examine the Escrow Bid Documents upon an additional three Days' notice.

iv. Following Final Completion of Work on the Project and achievement of final settlement, Owner shall direct the escrow agent holding the Escrow Bid Documents in writing to return those documents to Contractor.

END OF DOCUMENT

DOCUMENT 00680

ESCROW AGREEMENT FOR SECURITY DEPOSITS IN LIEU OF RETENTION
P.C.C. §22300

THIS ESCROW AGREEMENT ("Escrow Agreement") is made and entered into this _____ [date] day of _____ [month], _____ [year], by and between the SONOMA COUNTY WATER AGENCY, a public agency of the State of California (hereinafter called the "Owner"), whose address is 404 Aviation Blvd., Santa Rosa, CA 95403-9019; _____ [name of Contractor] ("Contractor"), whose place of business is located at _____ [Contractor's Address]; and [Owner, as escrow agent …OR… _____ [Name of Bank], a state or federally chartered bank in the State of California, whose place of business is located at _____] ("Escrow Agent").

For the consideration hereinafter set forth, Owner, Contractor and Escrow Agent agree as follows:

1. Pursuant to Section 22300 of Public Contract Code of the State of California, Contractor has the option to deposit securities with Escrow Agent as a substitute for retention earnings required to be withheld by Owner pursuant to Contract Number 0-706-7 #01 entered into between Owner and Contractor for Service Center Relocation (2025 Aviation Boulevard) in the amount of _____ [Contract Sum] dated _____ [Date of Contract] (the "Contract"). Alternatively, on written request of Contractor, Owner shall make payments of the retention earnings directly to Escrow Agent. When Contractor deposits the securities as a substitute for Contract earnings, Escrow Agent shall notify Owner within ten Days of the deposit. The market value of the securities at the time of substitution shall be at least equal to the cash amount then required to be withheld as retention under terms of Contract between Owner and Contractor. Securities shall be held in name of _____, and shall designate Contractor as the beneficial owner.

2. Owner shall make progress payments to Contractor for those funds which otherwise would be withheld from progress payments pursuant to Contract provisions, provided that Escrow Agent holds securities in form and amount specified in paragraph 1 of this Document 00680.

3. When Owner makes payment(s) of retention earned directly to Escrow Agent, Escrow Agent shall hold said payment(s) for the benefit of Contractor until the time that the escrow created under this Escrow Agreement is terminated. Contractor may direct the investment of the payments into securities. All terms and conditions of this Escrow Agreement and the rights and responsibilities of the parties shall be equally applicable and binding when Owner pays Escrow Agent directly.

4. Contractor shall be responsible for paying all fees for the expenses incurred by Escrow Agent in administering the Escrow Account, and all expenses of Owner. Such expenses and payment terms shall be determined by Owner, Contractor, and Escrow Agent.

5. Interest earned on securities or money market accounts held in escrow and all interest earned on that interest shall be for sole account of Contractor and shall be subject to withdrawal by Contractor at any time and from time to time without notice to Owner.

6. Contractor shall have the right to withdraw all or any part of the principal in the Escrow Account only by written notice to Escrow Agent accompanied by written authorization from Owner to Escrow Agent that Owner consents to withdrawal of amount sought to be withdrawn by Contractor.

7. Owner shall have the right to draw upon the securities in event of default by Contractor. Upon seven Days written notice to Escrow Agent from Owner of the default, Escrow Agent shall immediately convert the securities to cash and shall distribute the cash as instructed by Owner.

8. Upon receipt of written notification from Owner certifying that the Contract is final and complete, and that Contractor has complied with all requirements and procedures applicable to the Contract, Escrow Agent shall release to Contractor all securities and interest on deposit less escrow fees and charges of the Escrow Account. The escrow shall be closed immediately upon disbursement of all moneys and securities on deposit and payments of fees and charges.

9. Escrow Agent shall rely on written notifications from Owner and Contractor pursuant to paragraphs 5 through 8, inclusive, of this Document 00680 and Owner and Contractor shall hold Escrow Agent harmless from Escrow Agent's release and disbursement of securities and interest as set forth.

10. Names of persons who are authorized to give written notice or to receive written notice on behalf of Owner and on behalf of Contractor in connection with the foregoing, and exemplars of their respective signatures are as follows:

On behalf of Owner:

General Manager
Title
Grant Davis
Name

Signature
404 Aviation Boulevard
Address
Santa Rosa, CA 95403
City/State/Zip

On behalf of Contractor:

Title

Name

Signature

Address

City/State/Zip

On behalf of Escrow Agent:

Title

Name

Signature

Address

City/State/Zip

At the time the Escrow Account is opened, Owner and Contractor shall deliver to Escrow Agent a fully executed counterpart of this Document 00680.

/
/
/
/
/
/
/
/
/
/
/
/
/
/
/

IN WITNESS WHEREOF, the parties have executed this Escrow Agreement by their proper officers on the date first set forth above.

Owner

_____

_____
Title

_____
Name

_____
Signature

Contractor

_____

_____
Title

_____
Name

_____
Signature

Escrow Agent

_____

_____
Title

_____
Name

_____
Signature

REVIEWED AS TO FORM:

_____
County Counsel

_____
Date

END OF DOCUMENT

CONDITIONS OF THE CONTRACT

DOCUMENT 00700

GENERAL CONDITIONS

STANDARD EDITION

TABLE OF CONTENTS

1. GENERAL 1

1.1 Documents 1
1.2 Exercise Of Contract Responsibilities 1
1.3 Defined Terms 1

2. BIDDING 1

2.1 Investigation Prior To Bidding 1
2.2 Subcontractors 2

3. CONTRACT AWARD AND COMMENCEMENT OF THE WORK 3

3.1 Award Of Contract 3
3.2 Commencement Of Work 3

4. BONDS AND INSURANCE 3

4.1 Bonds 3
4.2 Insurance 3

5. DRAWINGS AND SPECIFICATIONS 3

5.1 Intent 3
5.2 Drawing Details 4
5.3 Interpretation Of Drawings And Specifications 4
5.4 Checking Of Drawings 5
5.5 Standards To Apply Where Specifications Are Not Furnished 5
5.6 Deviation from Specifications and Drawings 5
5.7 Precedence Of Documents 6
5.8 Ownership And Use Of Drawings, Specifications And Contract Documents 6

6. CONSTRUCTION BY OWNER OR BY SEPARATE CONTRACTORS 6

6.1 Owner's Right To Perform Construction And To Award Separate Contracts 6
6.2 Mutual Responsibility 6
6.3 Owner Authority Over Coordination 7

7. OWNER AND PAYMENT 8

7.1 Owner's Representative(s) 8
7.2 Means And Methods Of Construction 8
7.3 Receipt And Processing Of Applications For Payment 8

8. CONTROL OF THE WORK 8

8.1 Supervision Of Work By Contractor 8
8.2 Observation Of Work By Owner 9
8.3 Access To Work 9

8.4 Existing Utilities Shown or Indicated In Contract Documents 10
8.5 Protection of Underground Facilities When Digging Trenches Or During Excavation....11

9. WARRANTY, GUARANTY, AND INSPECTION OF WORK 12

9.1 Warranty And Guaranty 12
9.2 Inspection Of Work 13
9.3 Correction Of Defective Work 15
9.4 Acceptance And Correction Of Defective Work By Owner 16
9.5 Rights Upon Inspection, Correction, Or Acceptance 16
9.6 Proof Of Compliance Of Contract Provisions 17

10. CONTRACTOR'S ORGANIZATION AND EQUIPMENT 17

10.1 Contractor's Legal Address 17
10.2 Contractor's Office At The Work Site 17
10.3 Contractor's Superintendents Or Forepersons 18
10.4 Proficiency In English 18
10.5 Contractor's And Subcontractors' Employees 18
10.6 Contractor To Supply Sufficient Workers And Materials 18
10.7 Contractor To List Trades Working 19
10.8 Contractor's Use Of The Site 19
10.9 Apprenticeship Program 19

11. PROSECUTION AND PROGRESS OF THE WORK 20

11.1 Schedules And Examinations Of Contract Documents 20
11.2 Cost Data 21

12. CLAIMS BY CONTRACTOR 22

12.1 General 22
12.2 Procedure 23
12.3 Claim Format 24
12.4 Mediation 24
12.5 Subcontractor Claims 25
12.6 Exclusive Remedy 25
12.7 Final Claim Disposition 25

13. LEGAL AND MISCELLANEOUS 25

13.1 Laws And Regulations 25
13.2 Permits And Taxes 26
13.3 Responsibility Of Contractor And Indemnification 26
13.4 Concealed Or Unknown Conditions 27
13.5 Notice Of Hazardous Waste Or Materials Conditions 28
13.6 Suspension Of Work 29
13.7 Termination Of Contract For Cause 29
13.8 Termination Of Contract For Convenience 31
13.9 Contingent Assignment Of Subcontracts 33
13.10 Remedies and Contract Integration 34
13.11 Patents 35
13.12 Substitution For Patented And Specified Articles 35
13.13 Interest Of Public Officers 35

13.14 Limit Of Liability 35
14. MODIFICATIONS OF CONTRACT DOCUMENTS....36
14.1 Alterations, Modifications And Force Account Work 36
15. TIME ALLOWANCES....37
15.1 Time Allowances For Performance Of Contract Documents....37
15.2 Entitlement to Change Of Contract Time 37
15.3 Weather-Related Delays....38
15.4 Notice Of Delay 39
15.5 Time Extensions And/Or Compensation Entitlement For Delays 39
15.6 Liquidated Damages....40
16. WORKING CONDITIONS AND PREVAILING WAGES 40
16.1 Use Of Site/Sanitary Rules 40
16.2 Protection Of Work, Persons, And Property 41
16.3 Responsibility For Safety And Health....42
16.4 Emergencies 42
16.5 Use Of Roadways And Walkways....42
16.6 Nondiscrimination 43
16.7 Prevailing Wages....43
16.8 Environmental Controls 44
16.9 Shoring Safety Plan 44

GENERAL CONDITIONS

1. GENERAL

1.1 Documents

1.1.A. Contract Documents are complementary; what is called for by one is as binding as if called for by all. Contract Documents shall not be construed to create a contractual relationship of any kind between (1) Engineer or any Owner's Representative and Contractor; (2) Owner and/or its representatives and a Subcontractor, sub-Subcontractor, or supplier of any Project labor, materials, or equipment; or (3) between any persons or entities other than Owner and Contractor. Owner shall be deemed to be an intended third-party beneficiary of each agreement referenced in clause (2) above, and each such agreement shall so provide. Contractor is fully responsible for Contractor's own acts and omissions. Contractor is responsible for all acts and omissions of its Subcontractors, suppliers, and other persons and organizations performing or furnishing any of the Work, labor, materials, or equipment under a direct or indirect contract with Contractor.

1.2 Exercise Of Contract Responsibilities

1.2.A. In exercising its responsibilities and authorities under the Contract Documents, Owner does not assume any duties or responsibilities to any Subcontractor or supplier and does not assume any duty of care to Contractor, Contractor's Subcontractors or suppliers. Except as expressly set forth in the Contract Documents, in exercising their respective responsibilities and authorities under the Contract Documents, neither Engineer nor any Owner's Representative assumes any duties or responsibilities to any Subcontractor, sub-Subcontractor or supplier nor assumes any duty of care to Contractor or any Subcontractor, sub-Subcontractor or suppliers.

1.3 Defined Terms

1.3.A. All abbreviations and definitions of terms used and not otherwise defined in this Document 00700 are set forth in Section 01420 (References and Definitions). This Document 00700 subdivides at first level into Articles, and then into paragraphs.

2. BIDDING

2.1 Investigation Prior To Bidding

2.1.A. Prior to bidding, Bidders shall perform the work, investigations, research and analysis required by Article 5 of Document 00520 (Agreement). Under the Contract Documents, Contractor is charged with all information and knowledge that a reasonable Bidder would ascertain from having performed the required work, investigations, research, and analysis. Bid prices shall include entire cost of all "incidental work" to complete the Work, as that term is defined in Article 5 of this Document 00700.

2.1.B. Conditions Shown on Contract Documents: Information as to underground conditions, as-built conditions, or other conditions or obstructions indicated in the Contract Documents, *e.g.*, on Drawings or in Specifications, has been obtained with reasonable care, and has been recorded in good faith. Owner warrants, and Contractor may rely on, the accuracy of only limited types of information as discussed below.

1. Aboveground and As-Built Conditions: There is no express or implied warranty and no express or implied representation that any information as to aboveground conditions or as-built conditions indicated in the Contract Documents is correctly shown, or indicated, or complete. As a condition to bidding, Contractor shall verify by independent investigation all aboveground and as-built conditions. In submitting its Bid, Contractor shall rely on the results of its own independent investigation and shall not rely on Owner-supplied information regarding aboveground conditions and as-built conditions.
2. Subsurface Conditions: Contractor may rely only upon the general accuracy of actual reported depths, actual reported character of materials, actual reported soil types, actual reported water conditions, or actual obstructions shown or indicated in the Contract Documents. Owner is not responsible for (1) the completeness of any subsurface condition information for bidding or construction, (2) Contractor's conclusions or opinions drawn from any subsurface condition information, or (3) subsurface conditions that are not specifically shown. (For example, Owner is not responsible for soil conditions in areas contiguous to areas where a subsurface condition is shown.)
3. Conditions Shown in Reports and Drawings Supplied for Informational Purposes: Reference is made to Document 00320 (Geotechnical Data and Existing Conditions) for identification of geotechnical reports, "as-built" information, and other drawings or other documents describing physical conditions in or relating to existing surface or subsurface conditions or structures at or contiguous to the Site. These materials are not Contract Documents and, except for any "technical data" regarding subsurface conditions specifically identified in Document 00320 (Geotechnical Data and Existing Conditions), and "Underground Facilities" data, as limited in Document 00320 (Geotechnical Data and Existing Conditions), Contractor shall not in any manner rely on the information in these materials. Subject to the foregoing, Contractor shall make its own independent investigation of all conditions affecting the Work and must not rely on information provided by Owner.

2.2 Subcontractors

2.2.A. Consistent with Public Contract Code Sections 4101 *et seq.*, Contractor shall not substitute any other person or firm in place of any Subcontractor listed in the Bid. Subcontractors shall not assign or transfer their subcontracts or permit them to be performed by any other contractor without Owner's written approval. At Owner's request, Contractor shall provide Owner with a complete copy of all executed subcontracts or final commercial agreements with Subcontractors and/or suppliers.

2.2.B. Subcontract agreements shall preserve and protect the rights of Owner under the Contract Documents so that subcontracting will not prejudice such rights. To the extent of the Work to be performed by a Subcontractor, Contractor shall require the Subcontractor's written agreement (1) to be bound to the terms of Contract Documents and (2) to assume vis-à-vis Contractor all the obligations and responsibilities that Contractor assumes toward Owner under the Contract Documents. (These agreements include for example, and not by way of limitation, all warranties, claims procedures and rules governing submittals of all types to which Contractor is subject under the Contract Documents.)

2.2.C. Contractor shall provide for the assignment to Owner of all rights any Subcontractor may have against any manufacturer, supplier, or distributor for breach of warranties and guarantees relating to the Work performed by the Subcontractor under the Contract Documents.

3. CONTRACT AWARD AND COMMENCEMENT OF THE WORK

3.1 Award Of Contract

3.1.A. Owner will make the Award of Contract by issuing a Notice of Award. As a condition to Owner signing Document 00520 (Agreement), however, Contractor shall deliver to Owner the executed agreements, forms, bonds, and insurance documents required by Document 00200 (Instructions to Bidders) in the required quantities and within the required times.

3.2 Commencement Of Work

3.2.A. The Contract Time will commence to run on the 60th Day after the issuance of the Notice of Award or, if a Notice to Proceed is given, on the date indicated in the Notice to Proceed. See also paragraph 15.1.B of this Document 00700. Owner may give a Notice to Proceed at any time within 60 Days after the Notice of Award. Contractor shall not do any Work at the Site prior to the date on which the Contract Time commences to run.

4. BONDS AND INSURANCE

4.1 Bonds

4.1.A. At or before the date indicated in Document 00200 (Instructions to Bidders), Contractor shall file with Owner the following bonds:

1. Corporate surety bond, in the form of Document 00610 (Construction Performance Bond), in the penal sum of 100% of the Contractor's Bid as accepted, to guarantee faithful performance of the Work; and
2. Corporate surety bond, in the form of Document 00620 (Construction Labor and Material Payment Bond), in the penal sum of 100% of the Contractor's Bid as accepted, to guarantee payment of wages for services engaged and of bills contracted for materials, supplies, and equipment used in performance of Contract Documents.

4.1.B. Sureties shall be satisfactory to Owner. Corporate sureties on these bonds and on bonds accompanying Bids shall be duly licensed to do business in the State of California and shall have an A.M. Best Company financial rating of A or better.

4.2 Insurance

4.2.A. See paragraph 2.A of Document 00800 (Supplementary Conditions), incorporated herein by this reference.

5. DRAWINGS AND SPECIFICATIONS

5.1 Intent

5.1.A. Drawings and Specifications are intended to describe a functionally complete and operable Project (and all parts thereof) to be constructed in accordance with the requirements of Contract Documents. Contractor shall perform any work, provide

services and furnish any materials or equipment that may reasonably be inferred from the requirements of Contract Documents or from prevailing custom or trade usage as being required to produce this intended result. Contractor shall interpret words or phrases used to describe Work (including services), materials, or equipment that have well-known technical or construction industry or trade meaning in accordance with that meaning. Drawings' intent specifically includes the intent to depict construction that complies with all applicable laws, codes, and standards.

5.1.B. As part of the "Work," Contractor shall provide all labor, materials, equipment, machinery, tools, facilities, services, employee training and testing, hoisting facilities, Shop Drawings, storage, testing, security, transportation, disposal, the securing of all necessary or required field dimensions, the cutting or patching of existing materials, notices, permits, documents, reports, agreements, and any other items required or necessary to timely and fully complete Work described and the results intended by Contract Documents and, in particular, Drawings and Specifications. Divisions and Specification Sections and the identification on any Drawings shall not control Contractor in dividing Work among Subcontractors or suppliers or delineating the Work to be performed by any specific trade.

5.1.C. Contractor shall perform reasonably implied parts of Work as "incidental work" although absent from Drawings and Specifications. Incidental work includes any work not shown on Drawings or described in Specifications that is necessary or normally or customarily required as a part of the Work shown on Drawings or described in Specifications. Incidental work includes any work necessary or required to make each installation satisfactory, legally operable, functional, and consistent with the intent of Drawings and Specifications or the requirements of Contract Documents including required tasks to be performed under Division 1 of Specifications. Contractor shall perform incidental work without extra cost to Owner. Incidental work shall be treated as if fully described in Specifications and shown on Drawings, and the expense of incidental work shall be included in price Bid and Contract Sum.

5.2 Drawing Details

5.2.A. A typical or representative detail on Drawings shall constitute the standard for workmanship and material throughout corresponding parts of Work. Where necessary, and where reasonably inferable from Drawings, Contractor shall adapt such representative detail for application to such corresponding parts of Work. The details of such adaptation shall be subject to prior approval by Owner. Repetitive features shown in outline on Drawings shall be in exact accordance with corresponding features completely shown.

5.3 Interpretation Of Drawings And Specifications

5.3.A. Should any discrepancy appear or any misunderstanding arise as to the import of anything contained in Drawings and Specifications, or should Contractor have any questions or requests relating to Drawings or Specifications, Contractor shall refer the matter to Owner, in writing. Owner will issue with reasonable promptness written responses, clarifications or interpretations as Owner may determine necessary, which shall be consistent with the intent of and be reasonably inferable from Contract Documents. Such written clarifications or interpretations shall be binding upon Contractor. If Contractor believes that a written response, clarification or interpretation justifies an adjustment in the Contract Sum or Contract Time, Contractor shall give

Owner prompt written notice as provided in Section 01250 (Modification Procedures). If the parties are unable to agree to the amount or extent of the adjustment, if any, then Contractor shall perform the Work in conformance with Owner's response, clarification, or interpretation and may make a written claim for the adjustment as provided in Article 12 of this Document 00700.

5.4 Checking Of Drawings

5.4.A. Before undertaking each part of Work, Contractor shall carefully study and compare Contract Documents and check and verify pertinent figures shown in the Contract Documents and all applicable field measurements. Contractor shall be responsible for any errors that might have been avoided by such comparison. Figures shown on Drawings shall be followed; Contractor shall not scale measurements. Contractor shall promptly report to Owner, in writing, any conflict, error, ambiguity or discrepancy that Contractor may discover. Contractor shall obtain a written interpretation or clarification from Owner before proceeding with any Work affected thereby. Contractor shall provide Owner with a follow-up correspondence every ten Days until it receives a satisfactory interpretation or clarification.

5.5 Standards To Apply Where Specifications Are Not Furnished

5.5.A. The following general specifications shall apply wherever in the Specifications, or in any directions given by Owner in accordance with or supplementing Specifications, it is provided that Contractor shall furnish materials or manufactured articles or shall do Work for which no detailed specifications are shown. Materials or manufactured articles shall be of the best grade, in quality and workmanship, obtainable in the market from firms of established good reputation. If not ordinarily carried in stock, the materials or manufactured articles shall conform to industry standards for first-class materials or articles of the kind required, with due consideration of the use to which they are to be put. Work shall conform to the usual standards or codes, such as those cited in Section 01420 (References and Definitions), for first-class work of the kind required. Contractor shall specify in writing to Owner the materials to be used or Work to be performed under this paragraph 5.5 ten Business Days prior to furnishing such materials or performing such Work.

5.6 Deviation from Specifications and Drawings

5.6.A. Contractor shall perform Work in accordance with Drawings and Specifications. Contractor may deviate from Drawings or the dimensions given in the Drawings, and may deviate from the Specifications, only upon Owner's advance written approval of the proposed deviation. If Work requires a Submittal prior to commencement, then Contractor's performance of such Work prior to Submittal being favorably reviewed shall be at Contractor's sole risk.

5.6.B. Owner may order that locations, lines, and grades for Work vary from those shown on Drawings. Changes may be made in locations, lines, or grades for Work under any item of Contract Documents. No payment in addition to unit price fixed in the Contract Documents for Work under respective items will be allowed on account of variations from Drawings in unit price items. In lump sum contracts, or where there are no unit price items covering Work affected by variations of locations, lines, or grades, all changes in the Contract Documents will be made as set forth in Article 14 of this Document 00700.

5.7 Precedence Of Documents

5.7.A. In the case of discrepancy or ambiguity in the Contract Documents, the following order of precedence shall prevail:

1. Modifications in inverse chronological order (i.e., most recent first), and in the same order as specific portions they are modifying;
2. Document 00520 (Agreement), and terms and conditions referenced therein;
3. Document 00800 (Supplementary Conditions);
4. Document 00700 (General Conditions);
5. Division 1 Specifications;
6. Drawings and Division 2 through 16 Specifications;
7. Written numbers over figures, unless obviously incorrect;
8. Figured dimensions over scaled dimensions;
9. Large-scale Drawings over small-scale Drawings.

5.7.B. Any conflict between Drawings and Division 2 through 16 Specifications will be resolved in favor of the document of the latest date (i.e., the most recent document), and if the dates are the same or not determinable, then in favor of Specifications.

5.7.C. Any conflict between a bill or list of materials shown in the Contract Documents and the actual quantities required to complete Work required by Contract Documents, will be resolved in favor of the actual quantities.

5.7.D. In the event the Specifications include divisions above Division 16 (e.g., Division 17 and above), then such divisions shall be included within the Contract Documents unless identified otherwise.

5.8 Ownership And Use Of Drawings, Specifications And Contract Documents

5.8.A. Drawings, Specifications, and other Contract Documents were prepared for use for Work of Contract Documents only. No part of Contract Documents shall be used for any other construction or for any other purpose except with the written consent of Owner. Any unauthorized use of Contract Documents is prohibited and at the sole liability of the user.

6. CONSTRUCTION BY OWNER OR BY SEPARATE CONTRACTORS

6.1 Owner's Right To Perform Construction And To Award Separate Contracts

6.1.A. Owner may perform with its own forces, construction or operations related to the Project. Owner may also award separate contracts in connection with other portions of the Project or other construction or operations, on the Site or areas contiguous to the Site, under conditions similar to these Contract Documents, or may have utility owners perform other work. When separate contracts are awarded for different portions of the Project or other construction or operations on the Site, the term "Contractor" in these Contract Documents shall mean the Contractor herein.

6.2 Mutual Responsibility

6.2.A. Contractor shall afford all other contractors, utility owners, and Owner (if Owner is performing work with its own forces), proper and safe access to the Site, and reasonable opportunity for the installation and storage of their materials. Contractor shall ensure that the execution of its Work properly connects and coordinates with others' work, and shall cooperate with them to facilitate the progress of the Work.

6.2.B. Contractor shall coordinate its Work with the work of other separate contractors, Owner, and utility owners. Contractor shall hold coordination meetings with other contractors, Owner and its representatives, and utility owners as required by Section 01315 (Project Meetings).

6.2.C. Unless otherwise provided in the Contract Documents, Contractor shall do all cutting, fitting, and patching of the Work that may be required to make its several parts come together properly and integrate with such other work. Contractor shall not endanger any work of other separate contractors, Owner, or utility owners by cutting, excavating, or otherwise altering their work and will only cut or alter their work with the written consent of Owner and the others whose work will be affected.

6.2.D. Contractor's duties and responsibilities under paragraph 6.2.A of this Document 00700 are for the benefit of Owner and also for the benefit of such other contractors and utility owners working at the Site to the extent that there are comparable provisions for the benefit of Contractor in the direct contracts between Owner and such other contractors and utility owners.

6.2.E. To the extent that any part of Contractor's Work is to interface with work performed or installed by other contractors or utility owners, Contractor shall inspect and measure the in-place work. Contractor shall promptly report to Owner in writing any defect in in-place work that will impede or increase the cost of Contractor's interface unless corrected. Owner will require the contractor responsible for the Defective Work to make corrections so as to conform to its contract requirements, or, if the defect is the result of an error or omission in the Contract Documents, issue a Change Order. If Contractor fails to measure, inspect and/or report to Owner in writing defects that are reasonably discoverable, Contractor shall bear all costs of accomplishing the interface acceptable to Owner. This provision shall be included in any and all other contracts or subcontracts for Work to be performed where such a conflict could exist.

6.3 Owner Authority Over Coordination

6.3.A. Owner will have authority over coordination of the activities of multiple contractors in cases where Owner performs Work with its own forces or contracts with others for the performance of other Work on the Project, or utilities Work on the Site. Owner may at any time and in its sole discretion, designate a person or entity other than Owner to have authority over the coordination of the activities among the various contractors. Owner's authority with respect to coordination of the activities of multiple contractors and utility owners shall not relieve Contractor of its obligation to other contractors and utility owners to coordinate its Work with other contractors and utility owners as specified in paragraph 6.2 of this Document 00700. Contractor shall promptly notify Owner in writing when another contractor on the Project fails to coordinate its work with the Work of Contract Documents.

6.3.B. Contractor shall suspend any part of the Work or carry on the same in such manner as directed by Owner when such suspension or prosecution is necessary to facilitate the work of other contractors or workers. No damages or claims by Contractor will be allowed if the suspension or Work change is due in whole or in part to Contractor's failure to perform its obligation to coordinate its Work with other contractors and utility owners. Damages or claims will be allowed only to the extent of fault by Owner if the suspension or Work change is due in whole or in part to another contractor's failure to coordinate its work with Contractor, other contractors, and utility owners.

Owner reserves the right to back charge Contractor for any damages or claims incurred by other contractors as a result of Contractor's failure to perform its obligations to coordinate with other contractors and utility owners. Owner may deposit the funds retained with a Court of competent jurisdiction pursuant to applicable interpleader procedures and Contractor releases Owner of further liability regarding such funds.

7. OWNER AND PAYMENT

7.1 Owner's Representative(s)

7.1.A. Owner's Representative(s) will have limited authority to act on behalf of Owner as set forth in the Contract Documents. Except as otherwise provided in these Contract Documents or subsequently identified in writing by Owner, Owner will issue all communications to Contractor through Owner's Representative, and Contractor shall issue all communications to Owner through Owner's Representative in a written document delivered to Owner. Should any direct communications between Contractor and Owner's consultants, architects, or engineers not identified in Article 2 of Document 00520 (Agreement) occur during field visits or by telephone, Contractor shall immediately confirm them in a written document copied to Owner.

7.2 Means And Methods Of Construction

7.2.A. Subject to those rights specifically reserved in the Contract Documents, Owner will not supervise, or direct, or have control over, or be responsible for, Contractor's means, methods, techniques, sequences or procedures of construction, or the safety precautions and programs incident thereto, or Contractor's failure to comply with laws and regulations applicable to the furnishing or performance of Work. Owner will not be responsible for Contractor's failure to perform or furnish the Work in accordance with Contract Documents.

7.3 Receipt And Processing Of Applications For Payment

7.3.A. As required by Section 01200 (Price and Payment Procedures), Contractor shall prepare the schedules, submit Applications for Payment and warrant title to all Work covered by each Application for Payment. Owner will review Contractor's Applications for Payment and make payment thereon, and Contractor shall make payments to Subcontractors, suppliers, and others, as required by Section 01200 (Price and Payment Procedures).

8. CONTROL OF THE WORK

8.1 Supervision Of Work By Contractor

8.1.A. Contractor shall supervise, inspect, and direct Work competently and efficiently, devoting the attention and applying such personal skills and expertise as may be required and necessary to perform Work in accordance with Contract Documents. Contractor shall be solely responsible for and have control and charge of construction means, methods, techniques, sequences and procedures, safety precautions, and programs in connection with the Work. Contractor shall be responsible to see that the completed Work complies accurately with Contract Documents.

8.1.B. Contractor shall keep on the Site at all times during Work progress a competent resident Superintendent, who shall not be replaced without Owner's express written consent. The Superintendent shall be Contractor's representative at the Site and shall

have complete authority to act on behalf of Contractor. All communications to and from the Superintendent shall be as binding as if given to or by Contractor.

8.2 Observation Of Work By Owner

8.2.A. Work shall be performed under Owner's general observation and administration. Contractor shall comply with Owner's directions and instructions in accordance with the terms of Contract Documents, but nothing contained in these General Conditions shall be taken to relieve Contractor of any obligations or liabilities under the Contract Documents. Owner's failure to review or, upon review, failure to object to any aspect of Work reviewed, shall not be deemed a waiver or approval of any non-conforming aspect of Work.

8.2.B. Owner may engage an independent consultant or engineer (collectively for purposes of this paragraph 8.2, "Engineer") to assist in administering the Work. If so engaged, Engineer will advise and consult with Owner, but will have authority to act on behalf of Owner only to extent provided in the Contract Documents or as set forth in writing by Owner. Engineer will not be responsible for and will not have control or charge of construction means, methods, techniques, sequences or procedures, or for safety precautions and programs in connection with Work. Engineer will not be responsible for or have control over the acts or omissions of Contractor, Subcontractors or their agents or employees, or any other persons performing Work.

8.2.C. Engineer may review Contractor's Submittals, such as Shop Drawings, Product Data, and Samples, but only for conformance with design concept of Work and with information given in the Contract Documents.

8.2.D. Engineer may visit the Site at intervals appropriate to stage of construction to become familiar generally with the progress and quality of Work and to determine in general if Work is proceeding in accordance with Contract Documents. Based on its observations, Engineer may recommend to Owner that it disapprove or reject Work that Engineer believes to be Defective or will not produce a complete Project that conforms to Contract Documents or will prejudice the integrity of the design concept of the completed Project as a functioning whole as indicated by Contract Documents. Owner will also have authority to require special inspection or testing of Work, whether or not the Work is fabricated, installed, or completed.

8.2.E. Engineer may conduct inspections to recommend to Owner the dates that Contractor has achieved Substantial Completion and Final Acceptance, and will receive and forward to Owner for review written warranties and related documents required by Contract Documents.

8.3 Access To Work

8.3.A. During performance of Work, Owner and its agents, consultants, and employees may at any time enter upon Work, shops, or studios where any part of the Work may be in preparation, or factories where any materials for use in Work are being or are to be manufactured, and Contractor shall provide proper and safe facilities for this purpose, and shall make arrangements with manufacturers to facilitate inspection of their processes and products to such extent as Owner's interests may require. Other contractors performing work for Owner may also enter upon Work for all purposes required by their respective contracts. Subject to the rights reserved in the Contract Documents, Contractor shall have sole care, custody, and control of the Site and its Work areas.

8.4 Existing Utilities Shown or Indicated In Contract Documents

8.4.A. Drawings or Specifications may indicate above- and below-grade structures, drainage lines, storm drains, sewers, water, gas, electrical, chemical, hot water, and other similar items and utilities, and additional information may be on file at the Common Ground Alliance, 811. Contractor shall locate these known existing installations before proceeding with trenching or other operations that may cause damage, shall maintain them in service where appropriate, and shall repair any damage to them caused by the Work, at no increase in Contract Sum. Additional utilities whose locations are unknown to Owner are suspected to exist. Contractor shall be alert to their existence; if they are encountered, Contractor shall immediately report to Owner for disposition of the same. In addition to reporting if any utility is damaged, Contractor shall take appropriate action as provided in this Document 00700. Additional compensation or extension of time on account of utilities not shown or otherwise brought to Contractor's attention, including reasonable action taken to protect or repair damage, shall be determined as provided in this Document 00700.

8.4.B. At no additional cost to Owner, Contractor shall incorporate into the Work main or trunk line utilities identified in the Contract Documents and other utilities or underground structures known or reasonably discernible and that will remain in service, including reasonable adjustments to the design location (including minor relocations) of the existing or new installations. Contractor shall take immediate action to restore any in-service installations damaged by Contractor's operations. Should Owner determine that Contractor has not responded in a timely manner or not diligently pursued completion of the Work, Owner may restore service and deduct the costs of such action by Owner from the amounts due under the Contract.

8.4.C. Consistent with Government Code Section 4215, as between Owner and Contractor, Owner will be responsible for the timely removal, relocation, or protection of existing main or trunk line utility facilities located on the Site only if such utilities are not identified in the Contract Documents or Document 00320 (Geotechnical Data and Existing Conditions). Owner will compensate for the cost of locating and repairing damage not due to Contractor's failure to exercise reasonable care, removing and relocating such main or trunk line utility facilities not indicated in the Contract Documents or Document 00320 (Geotechnical Data and Existing Conditions) with reasonable accuracy, and equipment on the Project necessarily idled during such Work.

8.4.D. Prior to performing Work at the Site, Contractor shall lay out the locations of known underground utilities that are to remain in service and other significant known underground installations. At no additional cost to Owner, prior to commencing other Work in proximity to such known underground utilities or installations that can be readily inferred from adjacent surface improvements, Contractor shall further locate, by carefully excavating with small equipment, potholing, and principally by hand, such utilities or installations that are to remain and that are subject to damage. This obligation applies to all utilities (including, but not limited to, those referenced in paragraph 8.4.C of this Document 00700).

8.4.E. Nothing in this Document 00700 shall be deemed to require Owner to indicate the presence of existing service laterals or appurtenances whenever the presence of such utilities on the Site can be inferred by Contractor from the presence of an underground transmission main or other visible facilities, such as buildings, new asphalt, meters,

and junction boxes, on or adjacent to the Site. Contractor shall immediately secure all available information and notify Owner and utility, in writing, of its discovery, while performing Work under the Contract Documents, of any utility facilities not identified in the Drawings and Specifications.

8.5 Protection of Underground Facilities When Digging Trenches Or During Excavation

8.5.A. Before commencing Work of digging trenches or excavation, Contractor shall review all information available regarding subsurface conditions, including but not limited to information supplied in Document 00320 (Geotechnical Data and Existing Conditions), and subject to the terms and conditions of these documents, Contractor shall also comply with Government Code Sections 4216 to 4216.9, and in particular Section 4216.2 which provides, in part:

> Except in an emergency, every person planning to conduct any excavation shall contact the appropriate regional notification center at least two working days, but no more than 14 calendar days, prior to commencing that excavation, if the excavation will be conducted in an area which is known, or reasonably should be known, to contain subsurface installations other than the underground facilities owned or operated by the excavator, and, if practical, the excavator shall delineate with white paint or other suitable markings the area to be excavated. The regional notification center shall provide an inquiry identification number to the person who contacts the center and shall notify any member, if known, who has a subsurface installation in the area of the proposed excavation.

8.5.B. Contractor shall contact Common Ground Alliance, telephone 811, and schedule the Work to allow ample time for the center to notify its members and, if necessary, for any member to field locate and mark its facilities. Contractor is charged with knowledge of all subsurface conditions reflected in 811 records. Prior to commencing excavation or trenching Work, Contractor shall provide Owner with copies of all 811 records secured by Contractor. Contractor shall advise Owner of any conflict between information provided in Document 00320 (Geotechnical Data and Existing Conditions), the Drawings and that provided by 811 records. Contractor's excavation shall be subject to and comply with the Contract Documents, including without limitation paragraphs 2.1 and 8.4 of this Document 00700.

8.5.C. If an Underground Facility is uncovered or revealed at or contiguous to the Site which was not shown or indicated in the materials supplied by Owner or in information on file at 811 or is otherwise reasonably available to Contractor, then Contractor shall, promptly after becoming aware thereof and before further disturbing conditions affected thereby (and in no event later than seven Days), and prior to performing any Work in connection therewith (except in an emergency as required by Article 16 of this Document 00700), identify the owner of such Underground Facility and give written notice to that owner and to Owner. During such time, Contractor shall be responsible for the safety and protection of such Underground Facility.

8.5.D. Contractor shall be allowed an increase in the Contract Sum or an extension of the Contract Time, or both, to the extent that they are attributable to the existence of any Underground Facility that is owned and was built by Owner only where the Underground Facility:

1. Was not shown or indicated in the Contract Documents or in the information supplied pursuant to Document 00320 (Geotechnical Data and Existing Conditions) or in information on file at 811; and
2. Contractor did not know of it; and
3. Contractor could not reasonably have been expected to be aware of it or to have anticipated it from the information available. (For example, if surface conditions such as pavement repairs, valve covers, or other markings, indicate the presence of an Underground Facility, then an increase in the Contract Sum or an extension of the Contract Time will not be due, even if the Underground Facility was not indicated in the Contract Documents, in the information supplied to Contractor pursuant to Document 00320 [Geotechnical Data and Existing Conditions], in information on file at 811, or otherwise reasonably available to Contractor.)

8.5.E. Contractor shall bear the risk that Underground Facilities not owned or built by Owner may differ in nature or locations shown in information made available by Owner pursuant to Document 00320 (Geotechnical Data and Existing Conditions), in information on file at 811, or otherwise reasonably available to Contractor. Underground Facilities are inherent in construction involving digging of trenches or other excavations and Contractor is to apply its skill and industry to verify the information available.

8.5.F. The cost of all of the following will be included in the Contract Sum and Contractor shall have full responsibility for (a) reviewing and checking all available information and data including, but not limited to, Document 00320 (Geotechnical Data and Existing Conditions) and information on file at 811; (b) locating all Underground Facilities shown or indicated in the Contract Documents, available information, or indicated by visual observation including, but not limited to, and by way of example only, engaging qualified locating services and all necessary backhoeing and potholing; (c) coordinating the Work with the owners of such Underground Facilities during construction; and (d) the safety and protection of all such Underground Facilities and repairing any damage thereto resulting from the Work.

9. WARRANTY, GUARANTY, AND INSPECTION OF WORK

9.1 Warranty And Guaranty

9.1.A. General Representations and Warranties: Contractor represents and warrants that it is and will be at all times fully qualified and capable of performing every Phase of the Work and to complete Work in accordance with the terms of Contract Documents. Contractor warrants that all construction services shall be performed in accordance with generally accepted professional standards of good and sound construction practices and all requirements of Contract Documents. Contractor warrants that Work, including but not limited to each item of materials and equipment incorporated therein, shall be new, of suitable grade of its respective kind for its intended use, and free from defects in design, engineering, materials, construction and workmanship. Contractor warrants that Work shall conform in all respects with all applicable requirements of federal, state and local laws, applicable construction codes and standards, licenses, and permits, Drawings and Specifications and all descriptions set forth therein, and all other requirements of Contract Documents. Contractor shall not be responsible, however, for the negligence of others in the specification of specific

equipment, materials, design parameters and means or methods of construction where that is specifically shown and expressly required by Contract Documents.

9.1.B. Extended Guaranties: For any warranty or guaranty exceeding one year provided by the supplier or manufacturer of any equipment or materials used in the Project, Contractor shall assign such warranties and guaranties to Owner, supply Owner with all warranty and guaranty documents relative thereto, and act as co-guarantor of such equipment and materials for the extended term. If such co-guarantor obligation extends beyond the warranty, guaranty or correction periods otherwise established by the Contract Documents, then Contractor's co-guarantor obligation shall apply only to the extent the guaranty involves or affects water-tightness (above grade or below grade) or any type of moisture intrusion.

9.1.C. Environmental and Toxics Warranty: The covenants, warranties and representations contained in this paragraph 9.1.C. are effective continuously during Contractor's Work on the Project and following cessation of labor for any reason including, but not limited to, Project completion. Except as expressly shown in the Contract Documents, Contractor covenants, warrants and represents to Owner that:

1. To Contractor's knowledge after due inquiry, no lead or Asbestos-containing materials were installed or discovered in the Project at any time during Contractor's construction thereof. If any lead or Asbestos-containing materials were discovered, Contractor made immediate written disclosure to Owner.
2. To Contractor's knowledge after due inquiry, no electrical transformers, light fixtures with ballasts or other equipment containing PCBs were installed or discovered on the Project at any time during Contractor's construction thereof. If any such materials were discovered, Contractor made immediate written disclosure to Owner.
3. To Contractor's knowledge after due inquiry, no storage tanks for gasoline or any other toxic substance were installed or discovered on the Project at any time during Contractor's construction thereof. If any such materials were discovered, Contractor made immediate written disclosure to Owner.
4. Contractor's operations concerning the Project are and were not in violation of any applicable environmental federal, state, or local statute, law or regulation dealing with hazardous materials substances or toxic substances and no notice from any governmental body has been served upon Contractor claiming any violation of any such law, ordinance, code or regulation, or requiring or calling attention to the need for any Work, repairs, construction, alteration, or installation on or in connection with the Project in order to comply with any such laws, ordinances, codes, or regulations, with which Contractor has not complied. If there are any such notices with which Contractor has complied, Contractor shall provide Owner with copies thereof.

9.2 Inspection Of Work

9.2.A. All materials, equipment, and workmanship used in Work shall be subject to inspection and testing at all times during construction and/or manufacture in accordance with the terms of Contract Documents. Work and materials, and manufacture and preparation of materials, from beginning of construction until Final Completion and acceptance of Work, shall be subject to inspection and rejection by Owner, its agents, representatives or independent contractors retained by Owner to perform inspection services, or governmental agencies with jurisdictional interests.

Contractor shall provide them proper and safe conditions for such access and advise them of Contractor's Site safety procedures and program so that they may comply therewith as applicable. Upon request or where specified, Owner shall be afforded access for inspection at the source of supply, manufacture or assembly of any item of material or equipment, with reasonable accommodations supplied for making such inspections.

9.2.B. Contractor shall furnish, in such quantities and sizes as may be required for proper examination and tests, Samples or test specimens of all materials to be used or offered for use in connection with Work. Contractor shall prepare Samples or test specimens at its expense and furnish them to Owner. Contractor shall submit all Samples in ample time to enable Owner to make any necessary tests, examinations, or analyses before the time it is desired to incorporate the material into the Work.

9.2.C. Contractor shall give Owner timely notice of readiness of Work for all required inspections, tests or approvals, and shall cooperate with inspection and testing personnel to facilitate required inspections or tests.

9.2.D. If applicable laws or regulations of any public body having jurisdiction require any Work (or part thereof) specifically to be inspected, tested or approved by an employee or other representative of such public body, Contractor shall assume full responsibility for arranging and obtaining such inspections, tests or approvals, and furnish Owner with the required certificates of inspection, or approval. Owner will pay the cost of initial testing and Contractor shall pay all costs in connection with any follow-up or additional testing. Contractor shall also be responsible for arranging and obtaining and shall pay all costs in connection with any inspections, tests or approvals required for the acceptance of materials or equipment to be incorporated in the Work, or of materials, mix designs, or equipment submitted for approval prior to Contractor's purchase thereof for incorporation in the Work.

9.2.E. If Contractor covers any Work, or the work of others, prior to any required inspection, test or approval without written approval of Owner, Contractor shall uncover the Work at Owner's request. Contractor shall bear the expense of uncovering Work and replacing Work.

9.2.F. In any case where Contractor covers Work contrary to Owner's request, Contractor shall uncover Work for Owner's observation or inspection at Owner's request. Contractor shall bear the cost of uncovering Work.

9.2.G. Whenever required by Owner, Contractor shall furnish tools, labor and materials necessary to make examination of Work that may be completed or in progress, even to extent of uncovering or taking down portions of finished Work. Should Work be found unsatisfactory, cost of making examination and of reconstruction shall be borne by Contractor. If Work is found to be satisfactory, Owner, in manner herein prescribed for paying for alterations, Modifications, and extra Work, except as otherwise herein specified, will pay for examination.

9.2.H. Inspection of the Work by or on behalf of Owner, or Owner's failure to do so, shall not under any circumstances be deemed a waiver or approval of any non-conforming aspect of the Work. Contractor shall have an absolute duty, in the absence of a written Change Order signed by Owner, to perform Work in conformance with the Contract Documents and to correct Defective Work immediately upon Contractor's knowledge.

9.2.I. Any inspection, evaluation, or test performed by or on behalf of Owner relating to the Work is solely for the benefit of Owner, and shall not be relied upon by Contractor. Contractor shall not be relieved of the obligation to perform Work in accordance with the Contract Documents, nor relieved of any guaranty, warranty, or other obligation, as a result of any inspections, evaluations, or tests performed by Owner, whether or not such inspections, evaluations, or tests are permitted or required under the Contract Documents. Contractor shall be solely responsible for testing and inspecting Work already performed to determine whether such Work is in proper condition to receive later Work.

9.3 Correction Of Defective Work

9.3.A. If Contractor fails to supply sufficient skilled workers, suitable materials or equipment, or to furnish or perform the Work in such a way that the completed Work will conform to Contract Documents, Owner may order Contractor to replace any such Defective Work, or stop any portion of Work to permit Owner (at Contractor's expense) to replace such Defective Work. These Owner rights are entirely discretionary on the part of the Owner, and shall not give rise to any duty on the part of Owner to exercise the rights for the benefit of Contractor or any other party.

9.3.B. Owner may direct Contractor to correct any Defective Work or remove it from the Site and replace it with Work that is not Defective and satisfactorily correct or remove and replace any damage to other Work or the work of others resulting from the correction or removal. Contractor shall be responsible for any and all claims, costs, losses, and damages caused by or resulting from such correction or removal. A Change Order will be issued incorporating the necessary revisions in the Contract Documents with respect to the Work and the Contract Sum. If the parties are unable to agree to the amount of an appropriate decrease in the Contract Sum, Owner may decide the proper amount or, in its discretion may elect to leave the Contract Sum unchanged and deduct from moneys due Contractor, all such claims, costs, losses, and damages caused by or resulting from the correction or removal. If Contractor disagrees with Owner's calculations, it may make a claim as provided in Article 12 of this Document 00700. Owner's rights under this paragraph 9.3.B shall be in addition to any other rights it may have under the Contract Documents or by law.

9.3.C. Correction Period: If within one year after the date of Final Acceptance, or such longer period of time as may be prescribed by laws or regulations, or by the terms of Contract Documents, any Work (completed or incomplete) is found to be Defective, Contractor shall promptly, without cost to Owner and in accordance with Owner's written instructions, correct such Defective Work. Contractor shall remove any Defective Work rejected by Owner and replace it with Work that is not Defective, and satisfactorily correct or remove and replace any damage to other Work or the work of others resulting therefrom. If Contractor fails to promptly comply with the terms of such instructions, or in an emergency where delay would cause serious risk of loss or damage, Owner may have the Defective Work corrected or the rejected Work removed and replaced. Contractor shall pay for all claims, costs, losses, and damages caused by or resulting from such removal and replacement. Where Contractor fails to correct Defective Work, or defects are discovered outside the correction period, Owner shall have all rights and remedies granted by law.

9.3.D. In special circumstances where a part of the Work is occupied or a particular item of equipment is placed in continuous service before Final Acceptance of all the Work, the

correction period for that part of Work or that item may start to run from an earlier date if so provided by Change Order.

9.3.E. Where Defective Work or rejected Work (and damage to other Work resulting therefrom) has been corrected, removed, or replaced under this provision after the commencement of the correction period, the correction period hereunder with respect to such Work shall be extended for an additional period of one year, or such longer period of time as may be prescribed by laws, regulations, or by the terms of the Contract Documents, after such correction or removal and replacement has been satisfactorily completed.

9.4 Acceptance And Correction Of Defective Work By Owner

9.4.A. Owner may accept Defective Work. Contractor shall pay all claims, costs, losses, and damages attributable to Owner's evaluation of and determination to accept such Defective Work. If Owner accepts any Defective Work prior to final payment, a Change Order will be issued incorporating the necessary revisions in the Contract Documents with respect to the Work and the Contract Sum. If the parties are unable to agree to the amount of an appropriate decrease in the Contract Sum, Owner may deduct from moneys due Contractor, all claims, costs, losses, damages, expenses, and liabilities attributable to the Defective Work. If Contractor disagrees with Owner's calculations, Contractor may make a claim as provided in Article 12 of this Document 00700. If Owner accepts any Defective Work after final payment, Contractor shall pay to Owner, an appropriate amount as determined by Owner.

9.4.B. Owner may correct and remedy deficiency if, after five Days' written notice to Contractor, Contractor fails to correct Defective Work or to remove and replace rejected Work in accordance with paragraph 9.3.B of this Document 00700; or provide a plan for correction of Defective Work acceptable to Owner; or perform Work in accordance with Contract Documents. In connection with such corrective and remedial action, Owner may exclude Contractor from all or part of the Site; take possession of all or part of Work and suspend Contractor's Work related thereto; take possession of all or part of Contractor's tools, appliances, construction equipment, and machinery at the Site; and incorporate in Work any materials and equipment stored at the Site or for which Owner has paid Contractor but which are stored elsewhere. Contractor shall allow Owner, its representatives, agents, employees, and other contractors and Engineer's consultants access to the Site to enable Owner to exercise the rights and remedies under this paragraph 9.4.B. Contractor shall be responsible for all claims, costs, losses, damages, expenses and liabilities incurred or sustained by Owner in exercising such rights and remedies. A Change Order will be issued incorporating the necessary revisions in the Contract Documents with respect to Work and the Contract Sum. If the parties are unable to agree to the amount of an appropriate decrease in the Contract Sum, Owner may deduct from moneys due Contractor, all claims, costs, losses and damages caused by or resulting from the correction or removal. If Contractor disagrees with Owner's calculations, Contractor may make a claim as provided in Article 12 of this Document 00700.

9.5 Rights Upon Inspection, Correction, Or Acceptance

9.5.A. Contractor shall not be allowed an extension of Contract Time because of any delay in the performance of Work attributable to the exercise by Owner of its rights and remedies under this Article 9. Where Owner exercises its rights under this Article 9, it

retains and may still exercise all other rights it has by law or under the Contract Documents including, but not limited to, the right to terminate Contractor's right to proceed with the Work under the Contract Documents for cause and/or make a claim or back charge where a Change Order cannot be agreed upon.

9.5.B. Inspection by Owner or its authorized agents or representatives shall not relieve Contractor of its obligation to have furnished material and workmanship in accordance with Contract Documents. Payment for Work completed through periodic progress payments, Final Payment, or otherwise shall not operate to waive Owner's right to require full compliance with Contract Documents and shall in no way be deemed as acceptance of any Defective Work paid therefor. Contractor's obligation to complete the Work in accordance with Contract Documents shall be absolute, unless Owner agrees otherwise in writing.

9.5.C. Neither acceptance of the whole or any part of Work by Owner nor any verbal statements on behalf of Owner or its authorized agents or representatives shall operate as a waiver or Modification of any provision of the Contract Documents, or of any power reserved to Owner herein nor any right to damages provided in the Contract Documents.

9.6 Proof Of Compliance Of Contract Provisions

9.6.A. In order that Owner may determine whether Contractor has complied or is complying with requirements of Contract Documents not readily enforceable through inspection and tests of Work and materials, Contractor shall at any time, when requested, submit to Owner properly authenticated documents or other satisfactory proofs of compliance with all applicable requirements.

10. CONTRACTOR'S ORGANIZATION AND EQUIPMENT

10.1 Contractor's Legal Address

10.1.A. Address and facsimile number given in Contractor's Bid are hereby designated as Contractor's legal address and facsimile number. Contractor may change its legal address and facsimile number by notice in writing, delivered to Owner, which in conspicuous language advises Owner of a change in legal address or facsimile number, and which Owner accepts in writing. Delivery to Contractor's legal address or depositing in any post office or post office box regularly maintained by the United States Postal Service, in a wrapper with postage affixed, directed to Contractor at legal address, or of any drawings, notice, letter or other communication, shall be deemed legal and sufficient service thereof upon Contractor. Facsimile to Contractor's designated facsimile number of any letter, memorandum, or other communication on standard or legal sized paper, with proof of facsimile transmission, shall be deemed legal and sufficient service thereof upon Contractor.

10.2 Contractor's Office At The Work Site

10.2.A. Contractor shall maintain an office at the Site, which office shall be headquarters of a Contractor representative authorized to transmit to and receive from Owner, communications, instructions, or Drawings. Communications, instructions, or Drawings given to Contractor's representative or delivered at the Site office in representative's absence shall be deemed to have been given to Contractor.

10.3 Contractor's Superintendents Or Forepersons

10.3.A. Contractor shall at all times be represented on Site by one or more superintendents or forepersons authorized and competent to receive and carry out any instructions that Owner may give, and shall be liable for faithful observance of instructions delivered to Contractor or to authorized representative or representatives on Site.

10.4 Proficiency In English

10.4.A. Supervisors, security guards, safety personnel, and employees who have unescorted access to the Site shall possess proficiency in the English language in order to understand, receive, and carry out oral and written communications or instructions relating to their job functions, including safety and security requirements.

10.5 Contractor's And Subcontractors' Employees

10.5.A. Contractor shall employ, and shall permit its Subcontractors to employ, only competent and skillful personnel to do Work. If Owner notifies Contractor that any of its employees, or any of its Subcontractors' employees on Work is incompetent, unfaithful, disorderly, or profane, or fails to observe customary standards of conduct, or refuses to carry out any provision of the Contract Documents, or uses threatening or abusive language to any person on Work representing Owner, or violates sanitary rules, or is otherwise unsatisfactory, and if Owner requests that such person be discharged from Work, then Contractor or its Subcontractor shall immediately discharge such person from Work and the discharged person shall not be re-employed on the Work except with consent of Owner.

10.6 Contractor To Supply Sufficient Workers And Materials

10.6.A. Unless otherwise required by Owner under the terms of Contract Documents, Contractor shall at all times keep on the Site materials and employ qualified workers sufficient to prosecute Work at a rate and in a sequence and manner necessary to complete Work within the Contract Time. This obligation shall remain in full force and effect notwithstanding disputes or claims of any type.

10.6.B. At any time during progress of Work should Contractor directly or indirectly (through Subcontractors) refuse, neglect, or be unable to supply sufficient materials or employ qualified workers to prosecute the Work as required, then Owner may require Contractor to accelerate the Work and/or furnish additional qualified workers or materials as Owner may consider necessary, at no cost to Owner. If Contractor does not comply with the notice within three Business Days of date of service thereof, Owner shall have the right (but not a duty) to provide materials and qualified workers to finish the Work or any affected portion of Work, as Owner may elect. Owner may, at its discretion, exclude Contractor from the Site, or portions of the Site or separate Work elements during the time period that Owner exercises this right. Owner will deduct from moneys due or which may thereafter become due under the Contract Documents, the sums necessary to meet expenses thereby incurred and paid to persons supplying materials and doing Work. Owner will deduct from funds or appropriations set aside for purposes of Contract Documents the amount of such payments and charge them to Contractor as if paid to Contractor. Contractor shall remain liable for resulting delay, including liquidated damages and indemnification of Owner from claims of others.

10.6.C. Exercise by Owner of the rights conferred upon Owner in paragraph 10.6.B of this Document 00700, is entirely discretionary on the part of Owner. Owner shall have no duty or obligation to exercise the rights referred to in paragraph 10.6.B of this Document 00700 and its failure to exercise such rights shall not be deemed an approval of existing Work progress or a waiver or limitation of Owner's right to exercise such rights in other concurrent or future similar circumstances. The rights conferred upon Owner under paragraph 10.6.B of this Document 00700 are cumulative to Owner's other rights under any provision of the Contract Documents.

10.7 Contractor To List Trades Working

10.7.A. Contractor shall list the trades working on the Site and their scheduled activities on a daily basis, and provide a copy of that list to Owner.

10.8 Contractor's Use Of The Site

10.8.A. Contractor shall not make any arrangements with any person to permit occupancy or use of any land, structure, or building within the limits of the Work, for any purpose whatsoever, either with or without compensation, in conflict with any agreement between Owner and any owner, former owner or tenant of such land, structure, or buildings. Contractor may not occupy Owner-owned property outside the limit of the Work as indicated on the Drawings unless it obtains prior approval from Owner.

10.9 Apprenticeship Program

10.9.A. Contractor and Subcontractors shall comply with the requirements of California Labor Code Sections 1776, 1777.5, and 1777.6 concerning the employment of apprentices by Contractor or Subcontractors. Willful failure to comply may result in penalties, including loss of the right to Bid on or receive public works contracts.

10.9.B. Section 1777.5, as amended, requires a Contractor or Subcontractor employing tradespersons in any apprenticeable occupation to apply to the joint apprenticeship committee nearest the site of a public works project and which administers the apprenticeship program in that trade for a certification of approval. The certificate shall also fix the ratio of apprentices to journeypersons that will be used in performance of the Contract. The ratio of work performed by apprentices to journeypersons in such cases shall not be less than one *hour* of apprentice's work for every five *hours* of labor performed by journeypersons (the minimum ratio for the land surveyor classification shall not be less than one apprentice for each five journeypersons), except:

1. When unemployment for the previous three-month period in the area exceeds an average of 15 percent;
2. When the number of apprentices in training in the area exceeds a ratio of one to five;
3. When a trade can show that it is replacing at least 1/30 of its membership through apprenticeship training on an annual basis state-wide or locally; or
4. Assignment of an apprentice to any work performed under a public works contract would create a condition which would jeopardize his or her life or the life, safety, or property of fellow employees or the public at large or if the specific task to which the apprentice is to be assigned is of such a nature that training cannot be provided by a journeyperson.

10.9.C. Contractor is required to make contributions to funds established for administration of apprenticeship programs if Contractor employs registered apprentices or journeypersons in any apprenticeable trade on such contracts and if other contractors on the public works site are making such contributions.

10.9.D. Information relative to apprenticeship standards, wage schedules, and other requirements may be obtained from the Director of the California Department of Industrial Relations, or from the Division of Apprenticeship Standards and its branch offices.

11. PROSECUTION AND PROGRESS OF THE WORK

11.1 Schedules And Examinations Of Contract Documents

11.1.A. Contractor shall submit schedules, reports, and Submittals in the appropriate quantity and within the required time, arrange conferences and meetings, and proceed with the Work in accordance with Contract Documents, including Sections 01315 (Project Meetings), 01320 (Progress Schedules and Reports), and 01330 (Submittal Procedures).

11.1.B. Contractor shall submit to Owner for review and discussion at the initial Schedule Review Meeting described in Section 01315 (Project Meetings):

1. Progress Schedules and Reports as required by Sections 01320 (Progress Schedules and Reports) and 01330 (Submittal Procedures). Contractor shall utilize Progress Schedule in planning, scheduling, coordinating, performing, and controlling Work (including all activities of Subcontractors, assigned contractors, equipment vendors, and suppliers). Contractor shall update Progress Schedule on a monthly basis to depict accurately the actual progress of Work and for evaluating and preparing Contractor's monthly progress payments. Contractor's failure to submit and maintain an acceptable Progress Schedule may, in Owner's discretion, and without limiting the materiality of Contractor's other obligations under the Contract Documents, constitute grounds to declare Contractor in material breach of the Contract Documents.
2. Within 21 Days after issuance of Notice to Proceed, a preliminary schedule of Submittals that shall list each required Submittal and the times for submitting, reviewing and processing such Submittal, as required by Section 01330 (Submittal Procedures). If no such schedule is agreed upon, then all Submittals shall be completed and submitted within 35 Days after the Notice of Award.
3. Within 21 Days after issuance of Notice to Proceed, a preliminary Schedule of Values for all the Work which shall include quantities and prices of items aggregating the Contract Sum and shall subdivide each Schedule of Values into component activities in sufficient detail to serve as the basis for progress payments during construction. Such Schedule of Values shall include an appropriate amount of overhead and profit applicable to each item of Work, a line item for Project Record Documents, and a line item for Project scheduling, and shall conform to Section 01200 (Price and Payment Procedures).

11.1.C. Unless otherwise provided in the Contract Documents, at least 15 Days before submission of the first Application for Payment, a conference attended by Contractor, Owner, and others as appropriate, will be held to review for acceptability the schedules submitted in accordance with paragraph 11.1.B of this Document 00700. Contractor shall have an additional seven Days to make corrections and adjustments and to complete and resubmit the schedules. Schedules shall be updated and

completed as required by Sections 01200 (Price and Payment Procedures), 01320 (Progress Schedules and Reports) and 01330 (Submittal Procedures). No progress payment shall be due or owing to Contractor until the schedules are submitted to and acceptable to Owner or Engineer or both as meeting the requirements of the Contract Documents, including Sections 01200 (Price and Payment Procedures), 01320 (Progress Schedules and Reports) and 01330 (Submittal Procedures). Owner's acceptance of Contractor's schedules will not create any duty of care or impose on Owner any responsibility for the sequencing, scheduling, or progress of Work, nor will it interfere with or relieve Contractor from Contractor's full responsibility therefor.

11.1.D. Before commencing any portion of Work, Contractor shall inform Owner in writing as to time and place at which Contractor wishes to commence Work, and nature of Work to be done, in order that proper provision for inspection of Work may occur, and to assure measurements necessary for record and payment. Information shall be given to Owner a reasonable time in advance of time at which Contractor proposes to begin Work, so that Owner may complete necessary preliminary work without inconvenience or delay to Contractor.

11.1.E. Contractor shall submit Submittals to Owner (or Engineer if Owner so designates) for review in strict accordance with Section 01330 (Submittal Procedures). Submission of a Submittal shall constitute Contractor's representation that all requirements of Section 01330 (Submittal Procedures) have been complied with. All Submittals will be identified as Owner may require and in the number of copies specified in Section 01330 (Submittal Procedures).

11.1.F. Contractor shall not perform Work that requires submission of a Submittal prior to submission and favorable review of the Submittal. Where a Submittal is required by Contract Documents or the final Schedule of Submittals accepted by Owner, any related Work performed prior to Owner's approval of the pertinent Submittal shall be at the sole expense, responsibility, and risk of Contractor.

11.2 Cost Data

11.2.A. Contractor shall maintain full and correct information as to the number of workers employed in connection with each subdivision of Work, the classification and rate of pay of each worker in the form of certified payrolls, the cost to Contractor of each class of materials, tools, and appliances used by Contractor in Work, and the amount of each class of materials used in each subdivision of Work. Contractor shall provide Owner with copies of certified payrolls every 2 weeks. If Contractor maintains or is capable of generating summaries or reports comparing actual Project costs with Bid estimates or budgets, Contractor shall provide Owner with a copy of such report upon Owner's request and whenever it is generated.

11.2.B. Contractor shall maintain daily job reports recording all significant activity on the job, including the number of workers on Site, Work activities, problems encountered, and delays. Contractor shall provide Owner with copies for each Day Contractor works on the Project, to be delivered to Owner either the same Day or the following morning before starting Work at the Site. Contractor shall take monthly progress photographs of all areas of the Work. Contractor shall maintain copies of all correspondence with Subcontractors and records of meetings with Subcontractors.

11.2.C. Owner shall have the right to audit and copy Contractor's books and records of any type, nature, or description relating to the Project (including but not limited to financial

records reflecting in any way costs claimed on the Project), and to inspect the Site, including Contractor's trailer, or other job Site office, and this requirement shall be contained in the subcontracts of Subcontractors working on Site. By way of example, Owner shall have the right to inspect and obtain copies of all Contract Documents, planning and design documents, Bid proposal and negotiation documents (subject to Document 00670 [Escrow Bid Documents]), cost records and job cost variance reports, design modification proposals, value engineering or other cost reduction proposals, revisions made to the original design, job Progress Reports, photographs, and as-built drawings maintained by Contractor. Owner and any other applicable governmental entity shall have the right to inspect all information and documents maintained under this paragraph 11.2 at any time during the Project and for a period of five years following Substantial Completion. This right of inspection shall not relieve Contractor of its duties and obligations under the Contract Documents. This right of inspection shall be specifically enforceable in a court of law, either independently or in conjunction with enforcement of any other rights in the Contract Documents.

11.2.D. Contractor shall maintain in a safe place at the Site one record copy of all Drawings, Specifications, Addenda, Contract Modifications, Change Orders, Work Directives, Force Account orders, and written interpretations and clarifications in good order and annotated to show all changes made during construction. These Project Record Documents, together with all approved Samples and a counterpart of all approved Shop Drawings, shall be maintained and available to Owner for reference. Upon completion of the Work, Contractor shall deliver to Owner, the Project Record Documents.

12. CLAIMS BY CONTRACTOR

12.1 General

12.1.A. Contract Interpretation Disputes: Should it appear to Contractor that Work to be performed or any of the matters relative to Contract Documents (including without limitation Drawings or Specifications) are not satisfactorily detailed or explained therein, or should any questions arise as to the meaning or intent of Contract Documents (including without limitation Drawings or Specifications), Contractor shall give written notice to Owner. Contractor shall bear all costs incurred in giving notice. Owner will render a determination regarding the issue, which shall be final. If Contractor disagrees with Owner's decision, Contractor's sole and exclusive remedy is to file a claim in accordance with this Article 12. Contractor shall diligently prosecute the Disputed Work (as defined below) to Final Completion pending resolution of any claim.

12.1.B. Work Disputes: Contractor shall give written notice to Owner of any dispute arising under the Contract Documents respecting the true value of any Work performed, the implementation of Work required by Contract Documents, any Work omitted, any extra Work that Contractor may be required to perform or time extensions, respecting the size of any payment to Contractor during the performance of Contract Documents, or of compliance with Contract Documents procedures. Owner will render a determination regarding the issue, which shall be final. If Contractor disagrees with Owner's decision, Contractor's sole and exclusive remedy is to file a claim in accordance with this Article 12. Pending the resolution of any claim, Contractor shall diligently prosecute the Disputed Work to Final Completion.

12.1.C. The claim notice and documentation procedure described in this Article 12 shall constitute a mandatory non-judicial settlement procedure and shall apply to all claims and disputes arising under the Contract Documents, including without limitation any claim or dispute by any Subcontractor or material supplier. All Subcontractor and supplier claims of any type shall be brought only through Contractor as provided in this Article 12. Under no circumstances shall any Subcontractor or supplier make any direct claim against Owner.

12.1.D. "Claim" means a written demand or written assertion by Contractor seeking, as a matter of right, the payment of money, the adjustment or interpretation of Contract Documents terms, or other relief arising under or relating to Contract Documents. In order to qualify as a "claim," the written demand must state that it is a claim submitted under this Article 12.

12.1.E. A voucher, invoice, proposed change, Application for Payment, or other routine or authorized form of request for payment is not a claim under the Contract Documents. If such request is disputed as to liability or amount, then the disputed portion of the submission may be converted to a claim under the Contract Documents by submitting a separate claim in compliance with claim submission requirements.

12.1.F. The provisions of this Article 12 survive termination, breach, or completion of the Contract Documents. Contractor shall bear all costs incurred in the preparation and submission of a claim.

12.2 Procedure

12.2.A. Should any clarification, determination, action or inaction by Owner or Engineer, Work, or any other event, in the opinion of Contractor, exceed the requirements of or not comply with Contract Documents, or otherwise result in Contractor seeking additional compensation in time or money for any reason (collectively "Disputed Work"), then Contractor and Owner will make good faith attempts to resolve informally any and all such issues, claims and/or disputes. Before commencing the Disputed Work, or within seven Days after Contractor's first knowledge of the Disputed Work, whichever is earlier, Contractor shall file a written notice and cost proposal for the Disputed Work with Owner stating clearly and in detail its objection and reasons for contending the Work or interpretation is outside the requirements of Contract Documents. If a written notice and cost proposal for Disputed Work is not issued within this time period, or if Contractor proceeds with the Disputed Work without first having given the notice required by this paragraph 12.2.A, Contractor shall waive its rights to further claim on the specific issue.

12.2.B. Owner will review Contractor's timely notice and cost proposal for Disputed Work and provide a decision. If, after receiving the decision, Contractor disagrees with it or still considers the Work required of it to be outside of the requirements of Contract Documents, it shall so notify Owner, in writing, within seven Days after receiving the decision, by submitting a notice of potential claim, stating that a formal claim will be issued. Within 30 Days of receiving the decision, Contractor shall submit its claim in the form specified herein and all arguments, justification, cost or estimates, schedule analysis, and detailed documentation supporting its position. Contractor's failure to furnish notification within seven Days and all justifying documentation within 30 Days will result in Contractor waiving its right to the subject claim. If Disputed Work persists longer than 30 Days, then Contractor shall, every 30 Days until the Disputed

Work ceases, submit to Owner a document titled "Claim Update" that shall update and quantify all elements of the claim as completely as possible. Contractor's failure to submit a Claim Update or to quantify costs every 30 Days shall result in waiver of the claim for that 30-Day period. Claims or Claim Updates stating that damages, total damages (direct and indirect), schedule input and/or any time extension will be determined at a later date shall not comply with this paragraph 12.2.B and shall result in Contractor waiving its claim(s).

12.2.C. Upon receipt of Contractor's formal claim including all arguments, justifications, cost or estimates, schedule analysis, and all other documentation supporting its position as required herein, Owner or its designee will review the issue and render a final determination. Owner may in its discretion first conduct an administrative hearing on the claim, in which event Contractor shall appear and provide further substantiating information and documents if requested by Owner.

12.2.D. Claims shall be calculated in the same manner as Change Orders per Section 01250 (Modification Procedures). EXCEPT WHERE PROVIDED BY LAW, OR ELSEWHERE IN THESE CONTRACT DOCUMENTS (IF APPLICABLE), OWNER SHALL NOT BE LIABLE FOR SPECIAL OR CONSEQUENTIAL DAMAGES, AND CONTRACTOR SHALL NOT INCLUDE THEM IN ITS CLAIMS. CONTRACTOR SHALL BE LIMITED IN ITS RECOVERY ON CLAIMS TO THE CHANGE ORDER CALCULATIONS SET FORTH IN SECTION 01250 (MODIFICATION PROCEDURES).

12.3 Claim Format

12.3.A. Contractor shall submit the claim justification in the following format:

1. Cover letter and certification under penalty of perjury of the accuracy of the claim;
2. Summary of claim, including underlying facts, entitlement, schedule analysis, quantum calculations, Contract provisions supporting relief;
3. List of documents relating to claim including Specifications, Drawings, clarifications/requests for information, schedules, notices of delay, and any others;
4. Chronology of events and correspondence;
5. Analysis of claim merit;
6. Analysis of claim cost; and
7. Attach supporting documents referenced in paragraph 12.3.A.3.

12.4 Mediation

12.4.A. All Contractor claims not subject to the claim resolution procedures set forth in Section 01410 (Regulatory Requirements) shall, as a condition precedent to litigation (or if otherwise permitted by the Contract Documents, arbitration) thereon, first be mediated. Mediation shall be non-binding and utilize the services of a mediator mutually acceptable to the parties and, if the parties cannot agree, a mediator selected by the American Arbitration Association from its panel of approved mediators trained in construction industry mediation. Except as provided below in Section 12.7, all statutes of limitation shall be tolled from the date of the demand for mediation until a date two weeks following the mediation's conclusion. All unresolved Contractor claims shall be submitted to the same mediator. The cost of mediation shall be equally shared.

12.5 Subcontractor Claims

12.5.A. Contractor shall present as its claims all Subcontractor, sub-Subcontractor and supplier claims of any type, and prove them under the terms of the Contract Documents. Owner shall not be directly liable to any Subcontractor, any supplier, or any other person or organization, or to any surety for or employee or agent of any of them, for damages or extra costs of any type arising out of or resulting from the Project.

12.6 Exclusive Remedy

12.6.A. Contractor's performance of its duties and obligations specified in this Article 12 and administration of a claim as provided in this Article 12 is Contractor's sole and exclusive remedy for disputes of all types pertaining to the payment of money, extension of time, the adjustment or interpretation of the Contract Documents terms or other contractual or tort relief arising from Contract Documents. This exclusive remedy and the limitation of liability (expressed herein and elsewhere throughout the Contract Documents) apply notwithstanding the completion, termination, suspension, cancellation, breach, or rescission of the Work or Contract Documents, negligence or strict liability by Owner, its representatives, consultants, or agents, or the transfer of Work or the Project to Owner for any reason whatsoever. Contractor waives and covenants not to raise any claims of waiver, estoppel, release, bar, or any other type of excuse for non-compliance with these Article 12 claim submission, administration, and mediation requirements. Compliance with the claim submission, administration, and mediation procedures described in this Article 12 is a condition precedent to the right to file a Government Code Claim, commence litigation or commence any other legal action. Claim(s) or issue(s) not raised in a timely protest and timely claim submitted under this Article 12 may not be asserted in any subsequent Government Code Claim, litigation or legal action. Owner shall not be deemed to waive any provision under this Article 12, if at Owner's sole discretion, a claim is administered in a manner not in accord with this Article 12.

12.7 Final Claim Disposition

12.7.A. If the Contractor's claims submitted in accordance with this Article 12 at Project completion total $375,000 or less, then claims resolution shall proceed in the manner prescribed by Article 1.5, Chapter 1, Part 3 of Division 2 of the California Public Contract Code. If such claims exceed $375,000, then Contractor shall prepare a compendium of claims submitted and not resolved as a result of these procedures, and submit them in a Govt. Code Section 910 form of claim for final investigation and consideration of their settlement prior to initiation of any litigation thereon, as required by Government Code Section 945.4. Pursuant to Government Code Section 930.2, the one-year period in Government Code Section 911.2 shall be reduced to 150 days.

13. LEGAL AND MISCELLANEOUS

13.1 Laws And Regulations

13.1.A. Contractor shall keep fully informed of and shall comply with all laws, ordinances, regulations, and orders of any properly constituted authority affecting the Contract Documents, Work and persons connected with Work, and shall protect and indemnify Owner and its officers, employees, consultants, and agents against any claim or liability, including attorneys' fees, arising from or based on violation of law, ordinance,

regulation or order, whether by Contractor or by Subcontractors, employees, or agents. Authorized persons may at any time enter upon any part of Work to ascertain compliance of all applicable laws, ordinances, regulations and orders.

13.1.B. Whenever Drawings and Specifications require larger sizes or higher standards than are required by any applicable law, ordinance, regulation, or order, Drawings and Specifications shall govern. Whenever Drawings and Specifications require something that will violate such laws, ordinances, regulations, or orders, then such laws, ordinances, regulations, or orders shall govern.

13.2 Permits And Taxes

13.2.A. Contractor shall procure all permits and licenses applicable to the Work (including environmental matters to the extent applicable); pay all charges and fees, including fees for street opening permits; comply with, implement, and acknowledge effectiveness of all permits; initiate and cooperate in securing all required notifications or approvals therefore; and give all notices necessary and incident to due and lawful prosecution of Work, unless otherwise provided herein. Owner will pay applicable building permits, school, sanitation, and water fees for the completed construction. Contractor shall pay all sales and/or use taxes levied on materials, supplies, or equipment purchased and used on or incorporated into Work, and all other taxes properly assessed against equipment or other property used in connection with Work, without any increase in the Contract Sum. Contractor shall make necessary arrangements with proper authorities having jurisdiction over roads, streets, pipelines, navigable waterways, railroads, and other works in advance of operations, even where Owner may have already obtained permits for the Work.

13.3 Responsibility Of Contractor And Indemnification

13.3.A. Owner and each of its officers, employees, consultants, and agents including, but not limited to, the Board, Engineer, and each Owner's Representative, shall not be liable or accountable in any manner for loss or damage that may happen to any part of the Work; loss or damage to materials or other things used or employed in performing the Work; injury, sickness, disease, or death of any person; or damage to property resulting from any cause whatsoever except their sole negligence, willful misconduct or active negligence, attributable to performance or character of the Work, and Contractor releases all of the foregoing persons and entities from any and all such claims.

13.3.B. To the furthest extent permitted by law (including without limitation California Civil Code Section 2782), Contractor shall assume defense of, and indemnify and hold harmless, Owner and each of its officers, employees, consultants, and agents, including but not limited to the Board, Engineer, and each Owner's Representative, from claims, suits, actions, losses and liability of every kind, nature and description, including but not limited to claims and fines of regulatory agencies and attorneys' fees and consultants' fees, directly or indirectly arising out of, connected with or resulting from performance of the Work, failure to perform the Work, or condition of the Work which is caused in whole or part by any act or omission of Contractor, Subcontractors, anyone directly or indirectly employed by any of them or anyone for whose acts any of them may be liable, regardless of whether it is caused in part by the negligence of Owner or by any person or entity required to be indemnified hereunder.

13.3.C. With respect to third-party claims against Contractor, Contractor waives any and all rights to any type of express or implied indemnity against Owner and each of its officers, employees, consultants, and agents including, but not limited to Owner, the Board, Engineer and each Owner's Representative.

13.3.D. Approval or purchase of any insurance contracts or policies shall in no way relieve from liability nor limit the liability of Contractor, its Subcontractors of any tier, or the officers or agents of any of them.

13.3.E. To the furthest extent permitted by law (including, without limitation, Civil Code Section 2782), the indemnities, releases of liability and limitations of liability, claims procedures, and limitations of remedy expressed throughout Contract Documents shall apply even in the event of breach of Contract, negligence (active or passive), fault or strict liability of the party(ies) indemnified, released, or limited in liability, and shall survive the termination, rescission, breach, abandonment, or completion of the Work or the terms of the Contract Documents. If Contractor fails to perform any of these defense or indemnity obligations, Owner may in its discretion back charge Contractor for Owner's costs and damages resulting therefrom and withhold such sums from progress payments or other Contract moneys which may become due.

13.3.F. The indemnities in the Contract Documents shall not apply to any indemnified party to the extent of its sole negligence or willful misconduct; nor shall they apply to Owner or other indemnified party to the extent of its active negligence.

13.4 Concealed Or Unknown Conditions

13.4.A. If either of the following conditions is encountered at Site when digging trenches or other excavations that extend deeper than four feet below the surface, Contractor shall give a written Notice of Differing Site Conditions to Owner promptly before conditions are disturbed, except in an emergency as required by paragraph 16.4 of this Document 00700, and in no event later than seven Days after first observance of:

1. Subsurface or Latent physical conditions which differ materially from those indicated in the Contract Documents; or
2. Unknown physical conditions of an unusual nature or which differ materially from those ordinarily encountered and generally recognized as inherent in work of the character provided for in the Contract Documents.

13.4.B. In response to Contractor's Notice of Differing Site Conditions under paragraph 13.4.A, Owner will investigate the identified conditions, and if they differ materially and cause increase or decrease in Contractor's cost of, or time required for, performance of any part of the Work, Owner will issue either a Request for Proposal or a Construction Change Directive under the procedures described in the Contract Documents, including without limitation Section 01250 (Modification Procedures). If Owner determines that physical conditions at the Site are not Latent or are not materially different from those indicated in Contract Documents or that no change in terms of the Contract Documents is justified, Owner will so notify Contractor in writing, stating reasons (with Contractor retaining its rights under Article 12 of this Document 00700).

13.4.C. Contractor shall not be entitled to any adjustment in the Contract Sum or Contract Time regarding claimed Latent or materially different Site conditions (whether above or below grade) if:

1. Contractor knew of the existence of such conditions at the time Contractor submitted its Bid; or
2. Contractor should have known of the existence of such conditions as a result of having complied with the requirements of Contract Documents, including without limitation paragraphs 2.1 and 8.4 of this Document 00700; or
3. The information or conditions claimed by Contractor to be Latent or materially different consist of information, conclusions, opinions, or deductions of the kind that paragraph 2.1 of this Document 00700 precludes reliance upon; or
4. Contractor was required to give written Notice of Differing Site Conditions and failed to do so within the time required.

13.4.D. If Owner and Contractor are unable to agree on entitlement to or as to the amount or length of any adjustment in the Contract Sum or Contract Time required under this paragraph 13.4, Contractor shall proceed with the Work as directed by Owner and may make a claim as provided in Article 12 of this Document 00700.

13.5 Notice Of Hazardous Waste Or Materials Conditions

13.5.A. Contractor shall give a written Notice of Hazardous Materials Condition to Owner promptly, before any of the following conditions are disturbed (except in an emergency as required by paragraph 16.4 of this Document 00700), and in no event later than 24 hours after first observance of any:

1. Material that Contractor believes may be hazardous waste or hazardous material, as defined in Section 25117 of the Health and Safety Code (including, without limitation, Asbestos, lead, PCBs, petroleum and related hydrocarbons, and radioactive material) that is required to be removed to a Class I, Class II, or Class III disposal site in accordance with provisions of existing law ("hazardous material"); or
2. Other material that may present an imminent substantial danger to persons or property exposed thereto in connection with Work at the Site ("other materials").

13.5.B. Except as otherwise provided in the Contract Documents or as provided by applicable law, Contractor shall not be required to give any notice for the disturbance or observation of any such hazardous materials or other materials where such matter is disturbed or observed as part of the scope of Work under the Contract Documents (such as hazardous waste or hazardous material investigation, remediation or disposal activities which are identified as the subject of Work under the Contract Documents), where Contractor complies with all requirements in the Contract Documents and applicable law respecting such materials.

13.5.C. Contractor's Notice of Hazardous Materials Condition shall indicate whether the hazardous materials or other materials were shown or indicated in the Contract Documents to be within the scope of Work, and whether the hazardous materials or other materials were brought to the Site by Contractor, its Subcontractors, suppliers, or anyone else for whom Contractor is responsible.

13.5.D. Contractor shall not be entitled to any adjustment in the Contract Sum or Contract Time regarding claimed hazardous waste or materials if:

1. Contractor knew of the existence of such hazardous materials or other materials at the time Contractor submitted its Bid; or
2. Contractor should have known of the existence of such hazardous material or other materials as a result of its having the responsibility to obtain additional or

supplementary examinations, investigation, explorations, tests, studies, and data concerning the conditions at or contiguous to the Site prior to submitting its Bid; or

3. Contractor failed to give the written notice within the time required by paragraph 13.5.A of this Document 00700.

13.5.E. If Owner determines that conditions involve hazardous materials or other materials and that a change in Contract Document terms is justified, Owner will issue either a Request for Proposal or Construction Change Directive under the procedures described in the Contract Documents, including without limitation Section 01250 (Modification Procedures). If Owner determines that conditions do not involve hazardous materials or other materials or that no change in Contract Document terms is justified, Owner will notify Contractor in writing, stating the reasons for its determination.

13.5.F. In addition to the parties' other rights under paragraph 13.5.E of this Document 00700, if Contractor does not agree to resume Work based on a reasonable belief that it is unsafe, or does not agree to resume Work under special conditions, Owner may order the disputed portion of Work deleted from the Work, or performed by others, or Owner may invoke its right to terminate Contractor's right to proceed under the Contract Documents in whole or in part, for convenience or for cause as the facts may warrant.

13.5.G. If Contractor does not agree with any Owner determination of any adjustment in the Contract Sum or Contract Time under this paragraph 13.5, Contractor may make a claim as provided in Article 12 of this Document 00700.

13.6 Suspension Of Work

13.6.A. Owner may, without cause, order Contractor in writing to suspend, delay or interrupt Work in whole or in part for such period of time as Owner may determine. An adjustment shall be made for increases in cost of performance of Work of the Contract Documents caused by any such suspension, delay or interruption, calculated using the measures set forth in Section 01250 (Modification Procedures). No adjustment shall be made to extent that:

1. Performance is, was or would have been so suspended, delayed or interrupted by another cause for which Contractor is responsible; or
2. An equitable adjustment is made or denied under any other provision of Contract Documents; or
3. The suspension of Work was the direct or indirect result of Contractor's failure to perform any of its obligations hereunder. Adjustments made in cost of performance may have a mutually agreed fixed or percentage fee; if the parties cannot agree, Contractor may file a claim under Article 12 of this Document 00700.

13.7 Termination Of Contract For Cause

13.7.A. Owner may declare Contractor in default of Contract Documents and Owner may terminate Contractor's right to proceed under the Contract Documents for cause:

1. Should Contractor make an assignment for the benefit of creditors; admit in writing its inability to pay its debts as they become due; file a voluntary petition in bankruptcy; be adjudged a bankrupt or insolvent; be the subject of an involuntary petition in bankruptcy which is not dismissed within 60 Days; file a petition or answer seeking for itself any reorganization, arrangement, composition, readjustment, liquidation, dissolution, or similar relief under any present or future

statute, law, or regulation; file any answer admitting or not contesting the material allegations of a petition filed against Contractor in any such proceeding; or seek, consent to, or acquiesce in, the appointment of any trustee, receiver, custodian or liquidator of Contractor or of all or any substantial part of its properties or if Contractor, its directors or shareholders, take action to dissolve or liquidate Contractor; or

2. Should Contractor commit a material breach of the Contract Documents. If Owner declares Contractor in default due to material breach, however, Owner must allow Contractor an opportunity to cure such breach within ten Days of the date of notice from Owner to Contractor providing notice of the default; or, if such breach is curable but not curable within such ten-Day period, within such period of time as is reasonably necessary to accomplish such cure. (In order for Contractor to avail itself of a time period in excess of ten Days, Contractor must provide Owner within the ten-Day period with a written plan acceptable to Owner to cure said breach which includes, for example, evidence of necessary resources, Subcontractor commitments, schedules and recovery schedules meeting Contract Document requirements and showing a realistic and achievable plan to cure the breach. Contractor must then diligently commence and continue such cure according to the written plan); or
3. Should Contractor violate or allow (by a Subcontractor or other person or entity for which Contractor is responsible) a violation of any valid law, statute, regulation, rule, ordinance, permit, license or order of any governmental agency applicable to the Project or Work and does not cure (or cause to be cured) such violation within ten Days of the date of the notice from Owner to Contractor demanding such cure; or, if such violation is curable but not curable within such ten-Day period, within such period of time as is reasonably necessary to accomplish such cure. (In order for Contractor to avail itself of a time period in excess of ten Days, Contractor shall provide Owner within the ten-Day period with a written plan to cure said violation acceptable to Owner, and then diligently commence and continue performance of such cure according to the written plan.)

13.7.B. If Owner at any time reasonably believes that Contractor is or may be in default under the Contract Documents as provided in paragraph 13.7.A of this Document 00700, Owner may in its sole discretion notify Contractor of this fact and request written assurances from Contractor of performance of Contract Documents and a written plan from Contractor to remedy any default under the terms of Contract Documents which Owner may advise Contractor of in writing. Contractor shall, within 10 Days of Owner's request, deliver a written cure plan which meets the requirements of the written plan deliverable under paragraph 13.7.A.2 of this Document 00700. Failure of Contractor to provide such written assurances of performance and the required written plan, within ten Days of request, will constitute a material breach of Contract Documents sufficient to justify termination for cause.

13.7.C. In event of termination for cause, Owner will immediately serve written notice thereof upon Surety and Contractor. Surety shall have the rights and obligations set forth in Document 00610 (Construction Performance Bond). Subject to the Surety's rights under the Performance Bond (which rights are waived upon a default thereunder), Owner may take over the Work and prosecute it to completion by contract or by any other methods it may deem advisable.

13.7.D. In the event of termination by Owner as provided in paragraph 13.7.A of this Document 00700 for cause:

1. Owner will compensate Contractor for the value of the Work delivered to Owner upon termination as determined in accordance with the Contract Documents, subject to all rights of offset and back charges, and provided that Contractor provides Owner with updated as-builts and Project Record Documents showing the Work performed up to the date of termination. However, Owner will not compensate Contractor for its costs in terminating the Work or any cancellation charges owed to third parties.
2. Contractor shall deliver to Owner possession of the Work in its then condition including, but not limited to, all designs, engineering, Project records, Project Record Documents, cost data of all types, Drawings and Specifications and contracts with vendors and Subcontractors, all other documentation associated with the Project, and all construction supplies and aids dedicated solely to performing the Work which, in the normal course of construction, would be consumed or only have salvage value at the end of the construction period. Contractor shall remain fully liable for the failure of any Work completed and materials and equipment provided through the date of such termination to comply with the provisions of the Contract Documents. The provisions of this paragraph 13.7.D shall not be interpreted to diminish any right which Owner may have to claim and recover damages for any breach of Contract Documents or otherwise, but rather, Contractor shall compensate Owner for all loss, cost, damage, expense, and/or liability suffered by Owner as a result of such termination and failure to comply with Contract Documents.
3. Owner's rights under paragraph 13.7.D.2 shall be specifically enforceable to the greatest extent permitted by law. Owner shall, to the extent applicable, have all other rights and remedies set forth in any Bidding Document.

13.7.E. Owner may terminate portions or parts of the Work for cause, provided these portions or parts (1) have separate geographic areas from parts or portions of the Work not terminated or (2) are limited to the Work of one or more specific trades or Subcontractors. In such case, Contractor shall cooperate with a competing contractor as required under Article 6 of this Document 00700.

13.7.F. In the event a termination for cause is determined to have been made wrongfully or without cause, then the termination shall be treated as a termination for convenience, and Contractor shall have no greater rights than it would have had following a termination for convenience. Any Contractor claim arising out of a termination for cause shall be made in accordance with the provisions of the Contract Documents on claims and calculated in accordance with the provisions of the Contract Documents on Change Orders and claims. No other loss cost, damage, expense or liability may be claimed, requested or recovered by Contractor.

13.8 Termination Of Contract For Convenience

13.8.A. Owner may terminate performance of the Work under the Contract Documents in accordance with this clause in whole, or from time to time in part, whenever Owner shall determine that termination is in Owner's best interest. Termination shall be effected by Owner delivering to Contractor notice of termination specifying the extent to which performance of the Work under the Contract Documents is terminated and the effective date of the termination.

13.8.B. After receiving a notice of termination under paragraph 13.8.A of this Document 00700, and except as otherwise directed by Owner, Contractor shall:

1. Stop Work under the Contract Documents on date and to extent specified in notice of termination;
2. Place no further orders or subcontracts for materials, services, or facilities except as necessary to complete portion of Work under the Contract Documents which is not terminated;
3. Terminate all orders and subcontracts to extent that they relate to performance of Work terminated by the notice of termination;
4. Assign to Owner in manner, at times, and to extent directed by Owner, all right, title, and interest of Contractor under orders and subcontracts so terminated. Owner shall have the right, in its sole discretion, to settle or pay any or all claims arising out of termination of orders and subcontracts;
5. Settle all outstanding liabilities and all claims arising out of such termination of orders and subcontracts, with approval or ratification of Owner to extent Owner may require. Owner's approval or ratification shall be final for purposes of this paragraph 13.8;
6. Transfer title to Owner, and deliver in the manner, at the times, and to the extent, if any, directed by Owner, all fabricated or unfabricated parts, Work in process, completed Work, supplies, and all other material produced as part of, or acquired in connection with performance of, Work terminated by the notice of termination, and completed or partially completed drawings, drawings, specifications, information, and other property which, if the Project had been completed, would have been required to be furnished to Owner;
7. Use its best efforts to sell, in manner, at times, to extent, and at price or prices that Owner directs or authorizes, any property of types referred to in paragraph 13.8.B.6 of this Document 00700, but Contractor shall not be required to extend credit to any purchaser, and may acquire any such property under conditions prescribed and at price or prices approved by Owner. Proceeds of transfer or disposition shall be applied to reduce payments to be made by Owner to Contractor under the Contract Documents or shall otherwise be credited to the price or cost of Work covered by Contract Documents or paid in such other manner as Owner may direct;
8. Complete performance of the part of the Work which was not terminated by the notice of termination; and
9. Take such action as may be necessary, or as Owner may direct, to protect and preserve all property related to Contract Documents which is in Contractor's possession and in which Owner has or may acquire interest.

13.8.C. After receipt of a notice of termination under paragraph 13.8.A of this Document 00700, Contractor shall submit to Owner its termination claim, in form and with all certifications required by Article 12 of this Document 00700. Contractor's termination claim shall be submitted promptly, but in no event later than 6 months from effective date of the termination. Contractor and Owner may agree upon the whole or part of the amount or amounts to be paid to Contractor because of a total or partial termination of Work under this paragraph 13.8. If Contractor and Owner fail to agree on the whole amount to be paid to Contractor because of the termination of the Work under this paragraph 13.8, Owner's total liability to Contractor by reason of the termination shall be the total (without duplication of any items) of:

1. The reasonable cost to Contractor, without profit, for all Work performed prior to the effective date of the termination, including Work done to secure the Project for termination. Reasonable cost may not exceed the applicable percentage completion values derived from the Progress Schedule and the Schedule of Values. Deductions shall be made for cost of materials to be retained by Contractor, cost of Work defectively performed, amounts realized by sale of materials, and for other appropriate credits against cost of Work. Reasonable cost will include reasonable allowance for Project overhead and general administrative overhead not to exceed a total of ten percent of direct costs of such Work. When, in Owner's opinion, the cost of any item of Work is excessively high due to costs incurred to remedy or replace Defective or rejected Work, reasonable cost to be allowed will be the estimated reasonable cost of performing the Work in compliance with requirements of Contract Documents and excessive actual cost shall be disallowed.
2. A reasonable allowance for profit on cost of Work performed as determined under paragraph 13.8.C.1 of this Document 00700, provided that Contractor establishes to Owner's satisfaction that Contractor would have made a profit had the Project been completed, and provided further that the profit allowed shall not exceed 5 percent of cost.
3. Reasonable costs to Contractor of handling material returned to vendors, delivered to Owner or otherwise disposed of as directed by Owner.
4. A reasonable allowance for Contractor's internal administrative costs in preparing termination claim.
5. Except as provided in this paragraph 13.8.C of this Document 00700, Owner shall not be liable for costs incurred by Contractor or Subcontractors after receipt of a notice of termination. Such non-recoverable costs include, but are not limited to, anticipated profits on Work not performed as of the date of termination, post-termination employee salaries, post-termination general administrative expenses, post-termination overhead or unabsorbed overhead, costs of preparing and submitting Contractor's Bid, attorneys' fees of any type, and all costs relating to prosecution of claim or lawsuit.
6. Owner shall have no obligation to pay Contractor under this paragraph 13.8 unless and until Contractor provides Owner with updated and acceptable as-builts and Project Record Documents for Work completed prior to termination.

13.8.D. In arriving at the amount due Contractor under this clause, there shall be deducted:

1. All unliquidated advances or other payments on account previously made to Contractor which are applicable to the terminated portion of Contract Documents;
2. Any claim which Owner may have against Contractor in connection with Contract Documents; and
3. The agreed price for, or proceeds of sale of, any materials, supplies, or other things kept by Contractor or sold under provisions of this paragraph 13.8, and not otherwise recovered by or credited to Owner.

13.9 Contingent Assignment Of Subcontracts

13.9.A. Contractor hereby assigns to Owner each Subcontract for a portion of the Work, provided that:

1. The assignment is effective only after Owner's termination of Contractor's right to proceed under the Contract Documents (or portion thereof relating to that Subcontract) pursuant to paragraphs 13.7 or 13.8 of this Document 00700.

2. The assignment is effective only for the Subcontracts which Owner expressly accepts by notifying the Subcontractor in writing;
3. The assignment is subject to the prior rights, if any, of the Surety, obligated by Document 00610 (Construction Performance Bond) provided under the Contract Documents, where the Surety exercises its rights to complete the Contract;
4. After the effectiveness of an assignment, Contractor shall, at its sole cost and expense (except as otherwise provided in paragraphs 13.7 or 13.8 of this Document 00700), sign all instruments and take all actions reasonably requested by Owner to evidence and confirm the effectiveness of the assignment in Owner; and
5. Nothing in this paragraph 13.9 shall modify or limit any of Contractor's obligations to Owner arising from acts or omissions occurring before the effectiveness of any Subcontract assignment, including but not limited to all defense, indemnity and hold-harmless obligations arising from or related to the assigned Subcontract.

13.10 Remedies and Contract Integration

13.10.A. Subject to Contract Documents provisions regarding Contractor claims, claim review, and claim resolution, and subject to the limitations therein, the exclusive jurisdiction and venue for resolving all claims, counter-claims, disputes and other matters in question between Owner and Contractor arising out of or relating to Contract Documents, any breach thereof or the Project shall be the applicable court of competent jurisdiction located in the State of California, County of Sonoma. All Owner remedies provided in the Contract Documents shall be taken and construed as cumulative and not exclusive; that is, in addition to each and every other remedy herein provided; and in all instances Owner shall have any and all other equitable and legal rights and remedies which it would have according to law.

13.10.B. The Contract Documents, any Contract Modifications, and Change Orders shall represent the entire and integrated agreement between Owner and Contractor regarding the subject matters hereof and thereof and shall constitute the exclusive statement of the terms of the parties' agreement. The Contract Documents, and any Contract Modifications and Change Orders, shall supersede any and all prior negotiations, representations or agreements, written or oral, express or implied, that relate in any way to the subject matter of the Contract Documents or written Modifications. Owner and Contractor represent and agree that, except as otherwise expressly provided in the Contract Documents, they are entering into the Contract Documents and any subsequent written Modification in sole reliance upon the information set forth or referenced in the Contract Documents or Contract Modifications and the parties are not and will not rely on any other information.

13.10.C. In any proceeding to enforce the Contract Documents, Contractor and Owner agree that the finder of fact shall receive detailed instructions on the meaning and operation of the Contract Documents, including their conditions, limitations of liability and remedies clauses, claims procedures and any other provisions impacting major defenses and theories of liability of the parties. Detailed findings of fact shall be requested, to verify Contract enforcement.

13.10.D. Either party's waiver of any breach or failure to enforce any of the terms, covenants, conditions or other provisions of the Contract Documents at any time shall not in any way affect, limit, modify or waive that party's right thereafter to enforce or compel strict compliance with every term, covenant, condition or other provision hereof, any course of dealing or custom of the trade or oral representations notwithstanding.

13.11 Patents

13.11.A. Fees or claims for any patented invention, article or arrangement that may be used upon or in any manner connected with performance of the Work or any part thereof shall be included in the Bid price for doing the Work. Contractor shall defend, indemnify and hold harmless Owner and each of its officers, employees, consultants and agents, including, but not limited to, the Board and each Owner's Representative, from all damages, claims for damages, costs or expenses in law or equity, including attorneys' fees, arising from or relating to any claim that any article supplied or to be supplied under the Contract Documents infringes on the patent rights, copyright, trade name, trademark, service mark, trade secret or other intellectual property right of any person or persons or that the person or entity supplying the article does not have a lawful right to sell the same. Such costs or expenses for which Contractor agrees to indemnify and hold harmless the above indemnities include but are not limited to any and all license fees, whether such fees are agreed by any indemnitee or ordered by a court or administrative body of any competent jurisdiction.

13.12 Substitution For Patented And Specified Articles

13.12.A. Except as provided otherwise in Document 00200 (Instructions to Bidders) or in the Contract Documents, whenever in Specifications, material or process is designated by patent or proprietary name or by name of manufacturer, such designation shall be deemed to be used for purpose of facilitating description of material and process desired, and shall be deemed to be followed by the words "or Approved Equal" and Contractor may offer any substitute material or process that Contractor considers "equal" in every respect to that so designated and if material or process offered by Contractor is, in opinion of Owner, Equal in every respect to that so designated, its use will be approved. However, Contractor may utilize this right only by timely submitting Document 00660 (Substitution Request Form) as provided in Document 00200 (Instructions to Bidders). A substitution will be approved only if it is a true Equal item in every aspect of its design and quality, including but not limited to its dimensions, weights, service requirements, durability, functioning, impact on contiguous construction elements, overall schedule and design.

13.13 Interest Of Public Officers

13.13.A. No representative, officer, or employee of Owner, no member of the governing body of the locality in which the Project is situated, no member of the locality in which Owner was activated, and no other public official of such locality or localities who exercises any functions or responsibilities with respect to the Project, during the tenure of the official or for one year thereafter, shall, as principal, agent, attorney or otherwise, be directly or indirectly interested, in the Contract Documents or the proceeds thereof.

13.14 Limit Of Liability

13.14.A. OWNER, AND EACH OF ITS OFFICERS, BOARD MEMBERS, EMPLOYEES, CONSULTANTS AND AGENTS INCLUDING, BUT NOT LIMITED TO, ENGINEER AND EACH OTHER OWNER REPRESENTATIVE, SHALL HAVE NO LIABILITY TO CONTRACTOR FOR SPECIAL, CONSEQUENTIAL, OR INCIDENTAL DAMAGES, EXCEPT TO THE LIMITED EXTENT THAT THESE CONTRACT DOCUMENTS OR APPLICABLE PUBLIC CONTRACTING STATUTES MAY SPECIFY THEIR RECOVERY.

14. MODIFICATIONS OF CONTRACT DOCUMENTS

14.1 Alterations, Modifications And Force Account Work

14.1.A. No modification or deviation from the Drawings and Specifications will be permitted except by written Contract Modification.

14.1.B. Owner may, without notice to the sureties, make alterations, deviations, additions to, or deletions from Contract Documents; increase or decrease the quantity of any item or portion of the Work; expand, contract or otherwise change the Contract Time; delete any item or portion of the Work; and require extra Work. Contractor shall perform such Work under applicable provisions of the Contract Documents, unless specifically provided otherwise at the time the change is ordered. In the case of any ordered extra Work, Owner reserves the right to furnish all or portions of associated labor, material, and equipment, which Contractor shall accept and use without payment for costs, markup, profit, or otherwise for such Owner-furnished labor, materials, and equipment.

14.1.C. Changes affecting the Contract Time or Contract Sum of the Work shall be set forth in a written Change Order that shall specify:

1. The Work performed in connection with the change to be made;
2. The amount of the adjustment of the Contract Sum, if any, and the basis for compensation for the Work ordered; and
3. The extent of the adjustment in the Contract Time, if any.

14.1.D. A Change Order will become effective when signed by Owner. If Owner exercises its right to decide disputed issues pertaining to changed Work as set forth in Articles 12 and 14 of this Document 00700, then the resulting Change Order shall be effective when signed by Owner, notwithstanding that Contractor has not signed it.

14.1.E. Changes not affecting the Contract Time or Contract Sum of the Work, in Owner's discretion, may be set forth in a written RFI-Reply executed by Owner. Execution of such an RFI-Reply constitutes Contractor's agreement to make the specified change without change to the Contract Sum or the Contract Time.

14.1.F. Changes or deviations from Contract Documents affecting the Contract Time or Contract Sum of the Work shall not be made without the authority of an effective Change Order or Construction Change Directive as provided in Section 01250 (Modification Procedures), except in cases of emergency discussed in Article 16 of this Document 00700.

14.1.G. If changes ordered in design, workmanship or materials are of such a nature as to increase or decrease the cost of any part of the Work, the price fixed in the Contract Documents shall be increased or decreased by the amount that Contractor and Owner may agree upon as a reasonable and proper allowance for the cost increase or decrease. If an agreement cannot be reached, then Owner will reach a determination, which shall be final, subject to Contractor's rights under Article 12 of this Document 00700. In all cases Contractor shall perform the changed Work as directed by Owner subject to Contractor's rights under Article 12 of this Document 00700.

14.1.H. Contractor shall, upon Owner's request, permit inspection of the original unaltered Bid estimate, subcontract agreements, purchase orders relating to the change, and documents substantiating all costs associated with its cost proposal or claims arising from changes in the Work.

14.1.I. Changes in the Work made pursuant to this Article 14 and extensions of Contract Time necessary by reason thereof shall not in any way release the guarantees and warranties given by Contractor pursuant to provisions of the Contract Documents, nor shall such changes in the Work relieve or release the Sureties of bonds executed pursuant to said provisions. The Sureties, in executing such bonds, shall be deemed to have expressly agreed to any such change in the Work and to any extension of time made by reason thereof.

14.1.J. Procedures for Modifications of Contract Documents and for calculating the cost of extra Work are given in Section 01250 (Modification Procedures). Regarding delay and impact costs of any nature, Contractor may not seek delay compensation for on-Site or off-Site costs based on formulas, e.g., "Eichlay" or other formula. Rather, Contractor shall prove actual costs resulting from such delays. If Contractor requests compensation for delay to the construction, then Contractor shall prove and document actual costs plus markup per the cost categories and procedures in Section 01250 (Modification Procedures) in order to request, claim or prove compensation for delay.

14.1.K. Owner's General Manager is authorized to approve Change Orders in accordance with Resolution No. 04-0547 dated June 8, 2004. The approval period for such Change Orders is approximately seven Days from receipt of the signed Change Order from Contractor. If a Change Order is equal to or greater than the amounts authorized by Resolution No. 04-0547, it may be necessary for the Board to approve the Change Order, and if so the approval period is approximately 28 Days from receipt of the signed Change Order from Contractor. A performance bond rider covering the changed Work must be executed and delivered to Owner before proceeding with the changed Work. Contractor is charged with knowledge of Owner's approved Change Order limits and procedures in effect at the applicable time.

15. TIME ALLOWANCES

15.1 Time Allowances For Performance Of Contract Documents

15.1.A. When Contractor and Owner have signed the Contract Documents, Owner will serve a Notice to Proceed upon Contractor to that effect, either by depositing notice in a post office or post office box regularly maintained by United States Postal Service in a pre-paid wrapper directed to Contractor at legal address or (at Owner's option) by delivery by other means at legal address.

15.1.B. The start date for Contract Time shall be on the date indicated in the applicable Notice to Proceed. If no date is indicated, the start date for Contract Time shall be the fifth Day from the date that Contractor receives, by hand delivery or facsimile transmission, Owner's written Notice to Proceed, unless the Notice to Proceed is served by mail only, in which case the start date for Contract Time shall be the fifth Day following the mailing date. The total number of Days for completion of the Work under the Contract Documents shall be as provided in Document 00520 (Agreement).

15.2 Entitlement to Change Of Contract Time

15.2.A. The Contract Time may only be changed by Change Order or by Contract Modification, and all time limits stated in the Contract Documents are of the essence of Contract Documents.

15.2.B. The Contract Time will be adjusted in an amount equal to the time lost due to:

1. Changes in the Work ordered by Owner;

2. Acts or neglect by Owner, Engineer, any Owner's Representative, utility owners or other contractors performing other work, provided that Contractor has fully and completely performed its responsibilities under the Contract Documents; or
3. Fires, floods, epidemics, abnormal weather conditions beyond the parameters otherwise set forth in this paragraph 15.2, earthquakes, civil or labor disturbances, strikes or Acts of God, provided damages resulting therefrom are not the result of Contractor's failure to protect the Work as required by Contract Documents.

15.2.C. The Contract Time shall not be extended for any cause identified in paragraph 15.2.B above, however, unless:

1. Contractor actually has been prevented from completing any part of the Work within the Contract Time due to delay that is beyond Contractor's control and due to reasons for which Contractor is not responsible (delays attributable to and within the control of a Subcontractor, or its subcontractors, or supplier shall be deemed to be delays within the control of Contractor);
2. A claim for delay is made as provided herein; and
3. Contractor submits a Time Impact Evaluation as required under Section 01320 (Progress Schedules and Reports) that demonstrates actual delay to critical Work activities that actually delay the progress of the Work in the amount of time requested.

15.2.D. Where Contractor is prevented from completing any part of the Work within the Contract Time due to delay beyond the control of both Owner and Contractor (including, but not limited to, adverse weather of all types and acts of other contractors or utilities), an extension of Contract Time, in an amount equal to the time lost due to such delay (without compensation), shall be Contractor's sole and exclusive remedy for such delay.

15.3 Weather-Related Delays

15.3.A. Delays due to abnormal or adverse weather conditions will not be allowed for weather conditions that fall within the parameters listed herein. Adverse weather delays may be allowed only if the number of workdays of adverse weather exceeds these on a monthly basis and Contractor proves that adverse weather actually caused delays. Contractor shall give written notice of intent to claim an adverse weather Day within one Day of the adverse weather delay occurring. Rain parameters are as follows, pro-rated in the individual month Contractor starts and finishes Work.

Rain Days: January, [9]; February, [8]; March, [7]; April, [4]; May, [2]; June, [1]; July, [0]; August, [0]; September, [1]; October, [3]; November, [6]; and December, [8].

In order to qualify as an adverse weather delay with respect to the foregoing parameters, daily rainfall must exceed 0.10 of an inch or more at the Santa Rosa, California station, as measured by the National Oceanic & Atmospheric Administration, and Contractor must prove that the rain actually caused delay as set forth above.

15.3.B. Contractor shall include the foregoing rain parameters as a monthly activity in its Progress Schedule. As Work on the critical path is affected by rain, Contractor shall notify Owner and request that the Days be moved to the affected activities. Any adverse weather Days remaining shall be considered Project Float.

15.3.C. Adverse weather delay for rain shall be recognized for the actual period of time Contractor proves it was delayed by rain exceeding the specified parameters. For

example, and not by way of limitation, if rain exceeding the specified parameters does not in fact delay Contractor's progress on the critical path, then no time extension shall be recognized; and conversely, if Contractor proves that rain exceeding the specified parameters causes delay to Contractor for a period longer than the number of rain Days incurred (e.g., if it rains during grading Work), then Contractor shall be entitled to a time extension equal to the actual period of such delay.

15.3.D. Contractor shall take reasonable steps to mitigate potential weather delays, such as dewatering the Site, covering Work and material that could be affected adversely by weather, and using all necessary construction means and methods to dry and/or aerate wet soils. Failure to do so shall be cause for Owner to not grant a time extension due to adverse weather, where Contractor could have avoided or mitigated the potential delay by exercising reasonable care.

15.4 Notice Of Delay

15.4.A. Within seven Days of the beginning of any delay, Contractor shall notify Owner in writing, by submitting a notice of potential claim, of all anticipated delays resulting from the delay event in question. Any request for extension of time shall be accompanied by Contractor's written statement that the adjustment claimed is the entire adjustment to which the Contractor is entitled as a result of the occurrence of said event, and shall include a written schedule document that demonstrates delay to the critical path using a Time Impact Evaluation as specified in Section 01320 (Progress Schedules). Owner will determine all claims and adjustments in the Contract Time. No claim for an adjustment in the Contract Time will be valid and such claim will be waived if not submitted in accordance with the requirements of this paragraph 15.4.A.

15.5 Time Extensions And/Or Compensation Entitlement For Delays

15.5.A. Contractor may receive a time extension and be compensated for delays caused directly and solely by Owner.

15.5.B. Contractor may receive a time extension without compensation for delays resulting in whole or in part from causes beyond the reasonable control of Contractor and Owner, e.g., adverse weather conditions exceeding Contract Documents parameters, acts of third parties unrelated to Contractor's obligations herein, earthquakes, Acts of God and epidemics. In such cases, a time extension without compensation shall constitute Contractor's sole and exclusive remedy for such delays.

15.5.C. Contractor shall not be entitled to any time extension or compensation including, but not limited to, extended field or home office overhead, field supervision, costs of capital, interest, escalation charges, acceleration costs or other impacts for any delays caused in whole or in part by Contractor's failure to perform its obligations under the Contract Documents, or during periods of delay concurrently caused by Contractor and either Owner or others.

15.5.D. Contractor shall not be entitled to damages for delay to the Work caused by the following reasons:

1. Owner's right to sequence the Work in a manner which would avoid disruption to Owner's contractors and their subcontractors and Owner's employees, exercised as a result of Contractor's failure to perform its cooperation and coordination responsibilities required by Contract Documents; Owner's enforcement of any government act or regulation; or the provisions of the Contract Documents;

2. For changed Site conditions that are beyond the parties' contemplation, except that Owner may approve direct costs associated with unknown conditions (but not costs or damages which result from such delays); and
3. Extensive requests for clarifications to Contract Documents or Contract Modifications thereto, provided such clarifications or Contract Modifications are processed by Owner or its consultants in a reasonable time commensurate with Contract Documents requirements.

15.6 Liquidated Damages

15.6.A. Time is of the essence. Execution of Contract Documents by Contractor shall constitute acknowledgement by Contractor that Contractor understands, has ascertained and agrees that Owner will actually sustain damages in the amount fixed in the Contract Documents for each and every Day during which completion of Work required is delayed beyond expiration of time fixed for completion or extensions of time allowed pursuant to provisions hereof. Contractor and Owner agree that specified measures of liquidated damages shall be presumed to be the damages actually sustained by Owner as defined below, and that because of the nature of the Project, it would be impracticable or extremely difficult to fix the actual damages.

15.6.B. Liquidated damages shall be considered not as a penalty but as agreed monetary damage sustained by Owner for increased Project administration expenses, including extra inspection, construction management, and architectural and engineering expenses related to the Project and Contract Documents because Contractor failed to perform and complete Work within time fixed for completion or extensions of time allowed pursuant to provisions hereof. Liquidated damages shall not be deemed to include within their scope additional damages or administrative costs arising from Defective Work, lost revenues, interest expenses, cost of completion of the Work, cost of substitute facilities, claims and fines of regulatory agencies, damages suffered by others or other forms of liability claimed against Owner as a result of delay (e.g., delay or delay-related claims of other contractors or subcontractors), and defense costs thereof. Contractor shall be fully responsible for the actual amount of any such damages it causes, in addition to the liquidated damages otherwise due Owner.

15.6.C. Owner may deduct from any money due or to become due to Contractor subsequent to time for completion of entire Work and extensions of time allowed pursuant to provisions hereof, a sum representing then-accrued liquidated damages. Should Contractor fall behind the approved Progress Schedule, Owner may deduct liquidated damages based on its estimated period of late completion. Owner need not wait until Final Completion to withhold liquidated damages from Contractor's progress payments. Should money due or to become due to Contractor be insufficient to cover aggregate liquidated damages due, then Contractor forthwith shall pay the remainder of the assessed liquidated damages to Owner.

16. <u>WORKING CONDITIONS AND PREVAILING WAGES</u>

16.1 Use Of Site/Sanitary Rules

16.1.A. All portions of the Work shall be maintained at all times in neat, clean and sanitary condition. Contractor shall furnish toilets for use of Contractor's and Subcontractors' employees on the Site where needed, and their use shall be strictly enforced. All toilets

shall be properly secluded from public observation, and shall be located, constructed and maintained subject to Owner's approval.

16.1.B. Contractor shall confine construction equipment, the storage of materials and equipment and the operations of workers to the Site and land areas identified in and permitted by Contract Documents and other land and areas permitted by applicable laws and regulations, rights of way, permits and easements or as designated by Owner, and shall not unreasonably encumber the premises with construction equipment or other materials or equipment. Contractor shall assume full responsibility for any damage to any such land or area, any improvement located thereon, or to the owner or occupant thereof resulting from the performance of Work.

16.1.C. During the progress of the Work, Contractor shall keep the Site and the Project free from accumulations of waste materials, rubbish and other debris resulting from the Work. At the completion of the Work, Contractor shall clean the Site, remove all waste materials, rubbish and debris from and about the Site as well as all tools, appliances, construction equipment and machinery and surplus materials. Contractor shall leave the premises clean and ready for occupancy by Owner at Substantial Completion of Work. Contractor shall restore to original condition all property not designated for alteration by Contract Documents.

16.1.D. Contractor shall not load nor permit any part of any structure or pavement to be loaded in any manner that will endanger the structure or pavement, nor shall Contractor subject any part of Work or adjacent property to stresses or pressures that will endanger it. Contractor shall conduct all necessary existing conditions investigation regarding structural, mechanical, electrical or any other system existing, shall perform Work consistent with such existing conditions, and shall have full responsibility for insufficiencies or damage resulting from insufficiencies of existing systems, equipment or structures to accommodate performing the Work.

16.2 Protection Of Work, Persons, And Property

16.2.A. Contractor shall be responsible for initiating, maintaining and supervising all safety precautions and programs in connection with Work. Contractor shall comply with all safety requirements specified in any safety program established by Owner, or required by state, federal or local laws and ordinances. Contractor shall be responsible for all damage to Work, property or structures, and all injuries to persons either on the Site or constituting the Work (e.g., materials in transit), arising from the performance of Work of the Contract Documents from any cause.

16.2.B. Contractor shall comply with all applicable laws and regulations of any public body having jurisdiction for safety of persons or property or to protect them from damage, injury or loss; and shall erect and maintain all necessary safeguards for such safety and protection. Contractor shall notify owners of adjacent property and of Underground Facilities and utility owners when prosecution of the Work may affect them, and shall cooperate with them in the protection, removal, relocation and replacement of their property.

16.2.C. Contractor shall remedy all damage, injury or loss to any property referred to in paragraph 16.2.A of this Document 00700, caused, directly or indirectly, in whole or in part, by Contractor, any Subcontractor, supplier, or any other person or organization directly or indirectly employed by any of them to perform or furnish any Work or anyone for whose acts any of them may be liable. Contractor's duties and

responsibility for safety and for protection of Work shall continue until such time as all the Work is completed and Final Acceptance of the Work. Owner and its agents do not assume any responsibility for collecting any indemnity from any person or persons causing damage to Contractor's Work.

16.2.D. Contractor shall designate a qualified and experienced safety representative at the Site whose duties and responsibilities shall be the prevention of accidents and the maintaining and supervising of safety precautions and programs.

16.2.E. Owner may, at its option, retain such moneys due under the Contract Documents as Owner deems necessary until any and all suits or claims against Contractor for injury to persons or property shall be settled and Owner receives satisfactory evidence to that effect.

16.3 Responsibility For Safety And Health

16.3.A. Contractor shall ensure that its and each tier of Subcontractors' employees, agents and invitees comply with applicable health and safety laws while at the Site. These laws include the Occupational Safety and Health Act of 1970 and rules and regulations issued pursuant thereto, and Owner's safety regulations as amended from time to time. Contractor shall comply with all Owner directions regarding protective clothing and gear.

16.3.B. Contractor shall be fully responsible for the safety of its and its Subcontractors' employees, agents and invitees on the Site. Contractor shall notify Owner, in writing, of the existence of hazardous conditions, property or equipment at the Site that are not under Contractor's control. Contractor shall be responsible for taking all the necessary precautions against injury to persons or damage to the property of Contractor, Subcontractors or persons from recognized hazards until the responsible party corrects the hazard.

16.3.C. Contractor shall confine all persons acting on its or its Subcontractors' behalf to that portion of the Site where Work under the Contract Documents is to be performed, Owner-designated routes for ingress and egress thereto, and any other Owner-designated area. Except those routes for ingress and egress over which Contractor has no right of control, within such areas, Contractor shall provide safe means of access to all places at which persons may at any time have occasion to be present.

16.4 Emergencies

16.4.A. In emergencies affecting the safety or protection of persons or Work or property at the Site or adjacent thereto, Contractor, without special instruction or authorization from Owner, is obligated to act to prevent threat and damage, injury or loss, until directed otherwise by Owner. Contractor shall give Owner prompt written notice if Contractor believes that any significant changes in Work or variations from Contract Documents have been caused thereby. If Owner determines that a change in the Contract Documents is required because of the action taken by Contractor in response to such an emergency, a Change Order or Construction Change Directive will be issued to document the consequences of such action.

16.5 Use Of Roadways And Walkways

16.5.A. Contractor shall not unnecessarily interfere with use of any roadway, walkway or other facility for vehicular or pedestrian traffic. Before beginning any interference and only with Owner's prior concurrence, Contractor may provide detour or temporary

bridge for traffic to pass around or over the interference, which Contractor shall maintain in satisfactory condition as long as interference continues. Unless otherwise provided in the Contract Documents, Contractor shall bear the cost of these temporary facilities.

16.6 Nondiscrimination

16.6.A. No person or entity shall discriminate in the employment of persons upon public works because of race, religious creed, color, national origin, ancestry, physical disability, mental disability, medical condition, marital status, sexual preference, or gender of such persons, except as provided in Section 12940 of the Government Code. Every contractor for public works violating the provisions of Section 1735 of the Labor Code is subject to all the penalties imposed for a violation of Chapter 1, Part 7, Division 2 of the Labor Code. Contractor agrees to comply with the provisions of Chapter 19, Article II, of the Sonoma County Code prohibiting discrimination in housing, employment, and services because of AIDS or HIV infection during the term of this Contract and any extensions of the term.

16.7 Prevailing Wages

16.7.A. Contractor shall pay to persons performing labor in and about Work provided for in the Contract Documents an amount equal to or more than the general prevailing rate of per diem wages for (1) work of a similar character in the locality in which the Work is performed and (2) legal holiday and overtime work in said locality. The per diem wages shall be an amount equal to or more than the stipulated rates contained in a schedule that has been ascertained and determined by the Director of the State Department of Industrial Relations and Owner to be the general prevailing rate of per diem wages for each craft or type of workman or mechanic needed to execute this Contract. Contractor shall also cause a copy of this determination of the prevailing rate of per diem wages to be posted at each Site.

16.7.B. Contractor shall forfeit, as a penalty to Owner, Fifty Dollars ($50.00) for each laborer, workman, or mechanic employed in performing labor in and about the Work provided for in the Contract Documents for each Day, or portion thereof, that such laborer, workman or mechanic is paid less than the said stipulated rates for any Work done under the Contract Documents by him or her or by any Subcontractor under him or her, in violation of Articles 1 and 2 of Chapter 1 of Part 7 of Division II of the California Labor Code. The sums and amounts which shall be forfeited pursuant to this paragraph 16.7.B and the terms of the Labor Code shall be withheld and retained from payments due to Contractor under the Contract Documents, pursuant to this Document 00700 and the Labor Code, but no sum shall be so withheld, retained or forfeited except from the final payment without a full investigation by either the State Department of Industrial Relations or by Owner. The Labor Commissioner pursuant to Labor Code Section 1775 shall determine the final amount of forfeiture.

16.7.C. Contractor shall insert in every subcontract or other arrangement which Contractor may make for performance of Work or labor on Work provided for in the Contract, provision that Subcontractor shall pay persons performing labor or rendering service under subcontract or other arrangement not less than the general prevailing rate of per diem wages for work of a similar character in the locality in which the Work is performed, and not less than the general prevailing rate of per diem wages for holiday and overtime work fixed in the Labor Code.

16.7.D. Contractor stipulates that it shall comply with all applicable wage and hour laws, including without limitation Labor Code Section 1813.

16.8 Environmental Controls

16.8.A. Contractor shall comply with all rules, regulations, ordinances, and statutes that apply to any Work performed under the Contract Documents including, without limitation, any toxic, water, storm water management, and soil pollution controls and air pollution controls specified in Government Code Section 11017. Contractor shall be responsible for insuring that Contractor's Employees, Subcontractors, and the public are protected from exposure to airborne hazards or contaminated water, soil, or other toxic materials used during or generated by activities on the Site or associated with the Project.

16.9 Shoring Safety Plan

16.9.A. Any conflict between this paragraph 16.9 and Division 2 of the Specifications shall be resolved in favor of the most stringent requirement.

16.9.B. At least five Days in advance of any excavation five feet or more in depth, Contractor shall submit to Owner a detailed plan showing the shoring, bracing and sloping design (including calculations) and other provisions to be made for worker protection from the hazard of caving ground during the excavation, as required by Labor Code Section 6705. A civil or structural engineer registered in California shall prepare and sign any plan that varies from the shoring system standards established by the State Construction Safety Orders.

16.9.C. During the course of Work, Contractor shall be responsible for determining where sloping, shoring, and/or bracing is necessary and the adequacy of the design, installation, and maintenance of all shoring and bracing for all excavation, including any excavation less than five feet in depth. Contractor will be solely responsible for any damage or injuries that may result from excavating or trenching. Owner's acceptance of any drawings showing the shoring or bracing design or Work schedule shall not relieve Contractor of its responsibilities under this paragraph 16.9.

16.9.D. Appoint a qualified supervisory employee who shall be responsible to determine the sloping or shoring system to be used depending on local soil type, water table, stratification, depth, etc.

END OF DOCUMENT

DOCUMENT 00800

SUPPLEMENTARY CONDITIONS

1. SUMMARY

A. This document includes requirements that supplement the paragraphs of Document 00700 (General Conditions).

2. SUPPLEMENTS

A. Supplement to paragraph 4.2:

4.2.A. Contractor - Required Insurance.

1. At or before the date specified in Document 00510 (Notice of Award), Contractor shall furnish to Owner satisfactory proof that Contractor has obtained the following insurance as specified below:

a. Workers' Compensation Insurance & Employers Liability Insurance.

1) Workers' Compensation insurance with statutory limits as required by the Labor Code of the State of California.
2) Employers Liability with limits of $1,000,000 per Accident; $1,000,000 Disease per employee; $1,000,000 Disease per policy.
3) The policy shall be endorsed to include a written waiver of the insurer's right to subrogate against Owner.
4) Required Evidence of Coverage:
   (a) Subrogation waiver endorsement, and
   (b) Certificate of Insurance.
5) If injury occurs to any employee of Contractor, Subcontractor, or sub-subcontractor for which the employee, or the employee's dependents in the event of employee's death, is entitled to compensation from Owner under provisions of the Workers' Compensation Insurance and Safety Act (Act), as amended, or for which compensation is claimed from Owner, Owner may retain out of sums due Contractor under Contract Documents, amount sufficient to cover such compensation, as fixed by the Act, as amended, until such compensation is paid, or until it is determined that no compensation is due. If Owner is compelled to pay compensation, Owner may, in its discretion, either deduct and retain from the Contract Sum the amount so paid, or require Contractor to reimburse Owner.

b. General Liability Insurance.

1) Commercial General Liability Insurance on a standard occurrence form, no less broad than ISO form CG 00 01.
2) Minimum Limits:
   (a) Projects under $1,000,000: $1,000,000 per Occurrence; $2,000,000 General Aggregate; $2,000,000 Products/Completed Operations Aggregate. The General Aggregate shall apply separately to each Project.
   (b) Projects from $1,000,000 - $4,999,999: $2,000,000 per Occurrence; $4,000,000 General Aggregate; $4,000,000 Products/Completed Operations Aggregate. The General Aggregate shall apply separately to each Project.

(c) Projects from $5,000,000 - $9,999,999: $5,000,000 per Occurrence; $5,000,000 General Aggregate; $5,000,000 Products/Completed Operations Aggregate. The General Aggregate shall apply separately to each Project.
(d) Projects $10,000,000 and Over: Minimum Limits: $10,000,000 per Occurrence; $10,000,000 General Aggregate; $10,000,000 Products/Completed Operations Aggregate. The General Aggregate shall apply separately to each Project.

3) Contractor shall disclose any deductible or self-insured retention in excess of $25,000 and such deductible or self-insured retention must be approved in advance by Owner. Contractor is responsible for any deductible or self-insured retention.
4) Coverage shall be maintained for the entire period of the Work plus the additional periods as specified below:
   (a) Projects under $1,000,000: One (1) year after Final Completion and acceptance of the final payment for the Work.
   (b) Projects from $1,000,000 - $4,999,999: Two (2) years after Final Completion and acceptance of the final payment for the Work.
   (c) Projects from $5,000,000 - $9,999,999: Three (3) years after Final Completion and acceptance of the final payment for the Work.
   (d) Projects $10,000,000 and Over: Five (5) years after Final Completion and acceptance of the final payment for the Work.
5) Owner, its Board of Directors, and its employees, representatives, consultants, and agents; shall be additional insureds for liability arising out of ongoing <u>and</u> completed operations by or on behalf of the Contractor in the performance of the Contract Documents. Contractor shall maintain completed operations coverage and continue Owner *et al.* as additional insureds for duration listed above.
6) The policy definition of "insured contract" shall include assumptions of liability arising out of both ongoing operations and the products-completed operations hazard (broad form contractual liability coverage including the "f" definition of insured contract in ISO form CG 00 01, or equivalent).
7) The insurance provided to Owner *et al.* as additional insureds shall apply on a primary and non-contributory basis with respect to any insurance or self-insurance program maintained by Owner *et al.*
8) The policy shall not exclude injury or damage caused by, or resulting from, explosion, collapse and/or underground hazards, subsidence, mold or silica.
9) The policy shall not contain a Contractors' Warranty or other similar language which eliminates or restricts coverage because of a Subcontractor's failure to carry specific insurance or to supply evidence of such insurance.
10) The policy shall be endorsed to include a written waiver of the insurer's right to subrogate against all persons or entities that are, or are required to be, additional insureds.

11) The policy shall cover inter-insured suits between Owner and Contractor and include a "separation of insureds" or "severability" clause which treats each insured separately.
12) Required Evidence of Coverage:
    (a) Additional insured endorsements or policy language granting additional insured status;
    (b) Endorsement or policy language indicating that coverage is primary and non-contributory; and
    (c) Certificate of Insurance.

c. Automobile Liability Insurance.

1) Minimum Limits:
    (a) Projects under $1,000,000: $1,000,000 combined single limit per accident.
    (b) Projects $1,000,000 and Over: $2,000,000 combined single limit per accident.
2) Coverage shall apply to all owned, hired, and non-owned vehicles.
3) Owner, its Board of Directors, and its employees, representatives, consultants, and agents; and shall qualify as an insured.
4) Required Evidence of Coverage:
    (a) Endorsement or policy language indicating that Owner, its Board of Directors, and its employees, representatives, consultants, and agents; are insureds; and
    (b) Certificate of Insurance.

d. Professional Liability Insurance.

1) Required if the Contractor or its employees engage in design or professional activities (architecture, engineering or surveying) that are not subcontracted out.
2) Minimum Limit: $1,000,000.
3) Contractor shall disclose any deductible or self-insured retention in excess of $25,000.
4) If the insurance is on a Claims-Made basis, the retroactive date shall be no later than the commencement of the Work.
5) Coverage applicable to the Work performed under the Contract shall be continued for two (2) years after completion of the Work. Such continuation coverage may be provided by one of the following: (a) renewal of the existing policy; (b) an extended reporting period endorsement; or (c) replacement insurance with a retroactive date no later than the commencement of the Work.
6) Required Evidence of Coverage:
    (a) Certificate of Insurance.

2. Increase of Minimum Limits.
    a. Required minimum amounts of insurance may be increased should conditions of Work, in opinion of Owner, warrant such increase. Contractor shall increase required insurance amounts upon direction by Owner.
3. Standards for Insurance Companies.
    a. Insurers, other than the California State Compensation Insurance Fund, shall have an A.M. Best's rating of at least A:VII.

4. Documentation.
   a. The Certificate of Insurance shall include the following reference: 0-706-7 #01.
   b. Contractor agrees to maintain current Evidence of Coverage on file with Owner for the required period of insurance. Any requirement to maintain insurance after Final Completion of the Work, including providing Certificates evidencing required coverage(s), shall survive the Contract.
      1) Required Evidence of Insurance shall be submitted to Sonoma County Water Agency, 404 Aviation Boulevard, Santa Rosa, CA 95403-9019.
      2) Required Evidence of Coverage shall be submitted for any renewal or replacement of a policy that already exists, at least ten (10) days before expiration or other termination of the existing policy.
      3) Contractor shall provide immediate written notice if: (a) any of the required insurance policies is terminated; (b) the limits of any of the required policies are reduced; or (c) the deductible or self-insured retention is increased.
      4) Upon written request, certified copies of required insurance policies must be provided within thirty (30) days.
5. Material Breach.
   a. If Contractor fails to maintain insurance coverage which is required pursuant to the Contract Documents, it shall be deemed a material breach. Owner, at its sole option, may terminate the Contract for default and obtain damages from Contractor resulting from said breach. Alternatively, Owner may purchase the required insurance coverage, and without further notice to Contractor, Owner may deduct from sums due to Contractor any premium costs advanced by Owner for such insurance. These remedies shall be in addition to any other remedies available to Owner under the Contract Documents or Law.

4.2.B. <u>Subcontractors - Required Insurance.</u>

1. With respect to their portion of the Work, Subcontractors of all tiers shall maintain the same insurance required to be maintained by Contractor with limits as follows:
   a. Minimum General Liability Limits for Framing, Mechanical, and Electrical Subcontractors.
      1) Projects under $1,000,000: $1,000,000 per Occurrence; $2,000,000 General Aggregate; $2,000,000 Products/Completed Operations Aggregate. The General Aggregate shall apply separately to each Project.
      2) Projects $1,000,000 and Over: $2,000,000 per Occurrence; $4,000,000 General Aggregate; $4,000,000 Products/Completed Operations Aggregate. The General Aggregate shall apply separately to each Project.
   b. Minimum General Liability Limits for all Subcontractors other than Framing, Mechanical, and Electrical Subcontractors.
      1) $1,000,000 per Occurrence; $2,000,000 General Aggregate; $2,000,000 Products/Completed Operations Aggregate. The General Aggregate shall apply separately to each Project.
   c. Minimum Automobile Liability Limits.
      1) $1,000,000 combined single limit per accident.

d. Minimum Employers Liability Limits.

1) $1,000,000 per Accident; $1,000,000 Disease per employee; $1,000,000 Disease per policy.

e. Professional Liability Insurance.

1) Required for any architect, engineer, surveyor or other licensed professional engaged by Contractor to perform portions of the Work.
2) Minimum Limit: $1,000,000.
3) Contractor shall disclose any deductible or self-insured retention in excess of $25,000.
4) If the insurance is on a Claims-Made basis, the retroactive date shall be no later than the commencement of the Work.
5) Coverage applicable to the Work performed under the Contract shall be continued for two (2) years after completion of the Work. Such continuation coverage may be provided by one of the following: (a) renewal of the existing policy; (b) an extended reporting period endorsement; or (c) replacement insurance with a retroactive date no later than the commencement of the Work.
6) Required Evidence of Coverage:
   (a) Certificate of Insurance.

4.2.C. Builder's Risk.

1. With respect to Work under this Contract, Owner shall maintain "All-Risk" Course of Construction insurance as follows:
   a. Insured Property shall include: (1) Real property in Course of Construction; (2) building materials and supplies intended to be in or on the completed Work located at the Site, in storage or in transit, and whether or not owned or paid for by Owner; (3) fixtures and machinery intended to be in or on the completed Work; (4) scaffolding, cribbing, fencing, forms and temporary trailers, while located on the Site, in storage or in transit.
   b. Limit of insurance shall be the full contract value.
   c. Deductibles for claims against this coverage will not exceed $50,000. Responsibility for paying deductibles is as follows:

Contract Value or Description	**Contractor's Responsibility for Deductible**	**Owner's Responsibility for Deductible**
Job Order Contract (JOC) - $1,000,000	First $5,000	Balance of Deductible
Job Order Contract (JOC) - $2,000,000 - $5,000,000	First $10,000	Balance of Deductible
Full Contract Value under $1,000,000 other than JOC	First $5,000	Balance of Deductible
Full Contract Value: $1,000,000 - $9,999,999, other than JOC	First $10,000	Balance of Deductible

Full Contract Value: $10,000,000 - $19,999,999, other than JOC	First $25,000	Balance of Deductible
Full Contract Value: $20,000,000 and above, other than JOC	First $30,000	Balance of Deductible

d. Contractor and all Subcontractors of all tiers shall be additional insureds.
e. Excluded property: Equipment, tools, and personal effects belonging to Contractor or Subcontractors of all tiers.
f. Insured perils: All Risks of Direct Physical Damage or Loss, including flood and, for scheduled locations, earthquake, except as excluded.
g. Exclusions may include, but are not limited to:
    1) Loss due to wear and tear, moth, vermin, termites, insects, latent defects, gradual deterioration, wet or dry rot, rust, corrosion, erosion or normal settling, shrinkage and/or expansion of buildings or foundations.
    2) Loss or damage due to contaminants and/or pollutants. However, fire losses arising directly or indirectly from pollutants or contaminants are covered.
    3) Loss of use or occupancy or consequential loss.
    4) Liquidated damages and/or penalties for delay or detention in connection with guarantees of performance or efficiency.
    5) Loss or damage caused by or resulting from infidelity or dishonesty on the part of any insured or the employees or agents of any insured.
    6) Inventory shortage or unexplained disappearance.
h. A copy of Owner's Course of Construction Insurance, including all policy coverages, conditions and exclusions, shall control in the event of any conflict with the language of this Document 00800. Upon request, Owner will provide a Certificate of Property Insurance.

END OF DOCUMENT

DOCUMENT 00910

ADDENDA

SERVICE CENTER RELOCATION

(2025 AVIATION BOULEVARD)

[DOCUMENT TO BE COMPLETED AS ADDENDA DURING BID PERIOD]

END OF DOCUMENT

SPECIFICATIONS

DIVISION 1

GENERAL REQUIREMENTS

SECTION 01100

SUMMARY

PART 1 GENERAL

1.1 SUMMARY

A. Section includes:
   1. Summary of Work and Work Restrictions including:
      a. Summary
      b. Submittals
      c. Work Covered By Contract Documents
      d. Bid Items, Allowances, and Alternates
      e. Work Under Other Contracts
      f. Future Work
      g. Work Sequence
      h. Work Days and Hours
      i. Shutdown for Discovery of Cultural Resources
      j. Cooperation of Contractor and Coordination with Other Work
      k. Partial Occupancy/Utilization Requirements
      l. Contractor Use of Site
      m. Air Quality Standards
      n. Construction Staking and Monument Protection
      o. Protection of Existing Structures and Underground Facilities
      p. Permits
      q. Actual Damages
      r. Rights-of-Way
      s. Document Tracking
      t. Products Ordered In Advance
      u. Owner-Furnished Products

1.2 SUBMITTALS

A. Work Plans:
   1. Utility Protection Plan

1.3 WORK COVERED BY CONTRACT DOCUMENTS

A. Work comprises construction of Owner's new Service Center building and modifications to an existing building at Airport Treatment Plant to accommodate Owner's Service Center Relocation, 2025 Aviation Boulevard, Santa Rosa, California including without limitation grading, paving, mechanical, electrical and related work. Contract Documents fully describe the Work.
B. The Work of this Contract comprises construction of all the Work indicated, described in the Specifications, or otherwise required by the Contract Documents.
C. Unless provided otherwise in the Contract Documents, all risk of loss to Work covered by Contract Documents shall rest with Contractor until Final Acceptance of the Work.
D. Cost of maintenance of systems and equipment prior to Final Acceptance will be considered as included in prices Bid and no direct or additional payment will be made therefor.

1.4 BID ITEMS, ALLOWANCES, AND ALTERNATES

A. Any Bid item may be deleted from the Work and Contract Sum, in total or in part, prior to or after award of Contract without compensation in any form or adjustment of other Bid items or prices therefore.

B. Payment of all items is subject to provisions of Contract Documents, including without limitation Section 01200 (Price and Payment Procedures).

C. For all Bid items, furnish and install all Work, including connections to existing systems, indicated and described in Specifications and all other Contract Documents. Work and requirements applicable to each individual Bid item, or unit of Work, shall be deemed incorporated into the description of each Bid item (whether Lump Sum or Unit Price).

D. Bid item descriptions (listed by Bid item number):

1. Bonds. The lump sum price paid under this item shall be full payment for furnishing bonds as required by Document 00700 (General Conditions).
2. Insurance. The lump sum price paid under this item shall be full payment for furnishing insurance as required by Document 00700 (General Conditions).
3. Safety Program and Implementation. The lump sum price paid under this item shall be full payment for furnishing and implementing the Safety Program as required by Section 01540 (Site Security and Safety) and Document 00700 (General Conditions).
4. Construction Material Waste Management Plan and Implementation. The lump sum price paid under this item shall be full payment for furnishing and implementing the Construction Material Waste Management Plan as required by Section 01741 (Construction Material Waste Management Plan).
5. Installation, Operation, and Maintenance Manuals. The lump sum price paid under this item shall be full payment for furnishing installation, operation, and maintenance manuals as required by Section 01330 (Submittal Procedures).
6. Storm Water Pollution Prevention Plan. The lump sum price paid under this item shall be full payment for furnishing and implementing the Storm Water Pollution and Prevention Plan as required by Section 01500 (Temporary Facilities and Controls).
7. New Service Center Building. The lump sum price paid under this item shall be full payment for providing a pre-engineered metal building, including design, fabrication, procurement, and installation of reinforced concrete foundation, walls, ceilings, floors, windows, doors, insulation, cabinets, plumbing fixtures, finishes, light tubes and appurtenances within five feet of the building.
8. Existing Service Center Building Upgrades. The lump sum price paid under this item shall be full payment for all interior improvements to the existing building, including, but not limited to, new bathroom, ADA upgrades, walls, ceilings, floors, windows, doors, insulation, plumbing fixtures, finishes, light tubes, roof repair, and appurtenances within five feet of the building.
9. Sitework. The lump sum price paid under this item shall be full payment for miscelleneous sitework including site demolition and clearing, construction of covered wash pad and appurtenances up to existing cleanout, drain pipe and drainage structures, bollards, gates, fences, and appurtenances.
10. Grading and Paving. The lump sum price paid under this item shall be full payment for site grading, base rock, grinding, AC paving, and AC curbs.
11. Concrete Flatwork. The lump sum price paid under this item shall be full payment for subgrade preparation, installing new concrete curb, gutter, sidewalks, and driveway aprons.

12. Signs and Striping. The lump sum price paid under this item shall be full payment for signs, pavement striping, and pavement markings.
13. Sanitary Sewer. The lump sum price paid under this item shall be full payment for completing sanitary sewer additions and modifications as indicated, including trenching, backfill, pipe installation, connections, and trench paving.
14. Plumbing. The lump sum price paid under this item shall be full payment for providing new and modifying existing plumbing as indicated, including trenching, backfill, pipe installation, connections, and trench paving.
15. Farms to Fuel Pipelines. The lump sum price paid under this item shall be full payment for providing two 4" recycled water pipelines, including pipe, fittings, trenching, pressure testing, and filter building penetration.
16. Mechanical Work. The lump sum price paid under this item shall be full payment for providing a complete and operational mechanical system for the water source heat pump system including, but not limited to, heat pumps, fan coil unit, structural supports, ductwork, dampers, diffusers, piping, valves, hydronic-related materials, filters, connection to Filter Building recycled water system, hardware, instrumentation, controls, and appurtenances.
17. Lighting System. The lump sum price paid under this item shall be full payment for providing energy-efficient lighting fixtures, ballasts, lighting controls, outdoor light poles, power and control wiring, mounting hardware, start-up, testing, and training of lighting controls.
18. Data/Telecomm System. The lump sum price under this item shall be full payment for providing cabling, voice and data ports, copper and fiber optic patch panels, equipment racks, cable management systems, terminations, and testing for telephone and data signal strengths from each end port.
19. Electrical. The lump sum price paid under this item shall be full payment for demolition of existing electrical, electrical trenching and backfill, outdoor light standard bases, transformer pads, providing switchboards, transformers, electrical panels, circuit breakers, pull boxes, conduits, cables and wires, junction boxes, wireways, receptacles, signage, wire and conduit labels, mounting hardware and miscellaneous equipment as required for the following: general power systems, lighting system, modular furniture power and voice/data connections, backup power connections, power for heat pump system and recycled water system, signal systems for security, fire alarm systems, and radio system.
20. Fire Protection System. The lump sum price paid under this item shall be full payment to provide a fire sprinkler system for the new building including design and layout of sprinkler system, trenching and connection to existing 8" water main, providing all risers, valves, pipe, sprinkler heads, bracing, and appurtenances.
21. Access Control System. The lump sum price paid under this item shall be full payment for providing cabling, equipment and testing for an access control system
22. Recycled Water System. The lump sum price paid under this item shall be full payment for providing a complete working recycled water system within the Filter Building including, but not limited to, storage tank and base, pump motors, expansion tank, piping, piping supports, valves, conduits, circuit breakers, cabling, instrumentation, programmable logic controller, human machine interface, mounting equipment, programming and testing.
23. Mezzanine. The lump sum price paid under this item shall be full payment to provide pre-engineered mezzanines, including, but not limited to, design, fabrication,

procurement, installation, and construction of footings (including concrete slab demolition) as needed.

24. All Other Work. The lump sum price paid under this item shall be full payment for all Work of Contract Documents other than Work separately provided for under other Bid items.

E. Contingency Reserve.
   1. Costs authorized to be paid from the Contingency Reserve:
      a. Cost to Contractor or Subcontractor for removal, as directed by Owner, of unforeseen underground manmade structures that interfere with construction and that require special equipment or additional labor, time, or equipment.
      b. Cost to Contractor or Subcontractor for relocation or repair, as directed by Owner, of unforeseen underground utilities.

F. Allowances: (N/A)

G. Alternates: (N/A)

1.5 WORK UNDER OTHER CONTRACTS

A. A separate contractor may be on Site constructing the Farms to Fuel Project.

1.6 FUTURE WORK

A. None expected.

1.7 WORK SEQUENCE

A. Construct Work in stages and at times to accommodate Owner operation requirements during the construction period; coordinate construction schedule and operations with Owner.

B. Special operational constraints include the following:
   1. Power shutdowns: Notify Owner in writing at least 2 Business Days prior to the need for a shutdown of any of the existing electrical systems. Certify that all materials, equipment, and personnel are available to perform the Work requiring the shutdown. Owner may verify this certification. Owner forces will perform shutdowns of existing systems. Timing of shutdowns will be at Owner's discretion.

C. Special Work sequence requirements include the following:
   1. Owner anticipates that Work at the Site will start no sooner than 150 Days after Contract Time commences to run, dependent upon permit approvals.

1.8 WORK DAYS AND HOURS

A. Work Days and hours: Monday-Friday inclusive, 7:00 a.m.-5:00 p.m. local time.

B. Owner’s Board has mandated five days of Mandatory Time Off during the 2011/12 fiscal year. Owner will provide notice to Contractor, if applicable, of MTO dates and Work will not be permitted on those Days.

C. Work at the Site on weekends, holidays, or at night is not permitted, unless Contractor requests otherwise from Owner in writing at least 48 hours in advance and Owner approves in its sole discretion.

D. Contractor will not be permitted to schedule utility shutdowns on Fridays.

1.9 SHUTDOWN FOR DISCOVERY OF CULTURAL RESOURCES

A. If discovery is made of items of historical, archaeological, or paleontological interest, immediately cease all Work in the area of discovery. Archaeological indicators may include, but are not limited to, dwelling sites, locally darkened soils, stone implements or other

artifacts, fragments of glass or ceramics, animal bones, human bones, and fossils. After cessation of excavation, immediately contact Owner. Do not resume Work until authorization is received from Owner. When resumed, excavation or other activities shall be as directed by Owner.

1.10 COOPERATION OF CONTRACTOR AND COORDINATION WITH OTHER WORK

A. Coordinate with Owner and any Owner forces, or other contractors and forces, as required by Document 00700 (General Conditions), Article 6.
B. Employ a full-time coordinator to constantly review Contract Documents, submittals, changes, and prepare overlay drawings as necessary to avoid conflicts, errors, omissions and untimely construction.

1.11 PARTIAL OCCUPANCY/UTILIZATION REQUIREMENTS

A. Allow Owner to take possession of and use any completed or partially completed portion of the Work during the progress of the Work as soon as is possible without interference to the Work.
B. Possession, use of Work, and placement and installation of equipment by Owner shall not in any way evidence the completion of the Work or any part of it.
C. Contractor shall not be held responsible for damage to the occupied part of the Work resulting from Owner occupancy.
D. Make available, in areas occupied, on a 24-hour per day and 7-day per week basis if required, any utility services, heating, and cooling in condition to be put in operation at the time of occupancy.
   1. Responsibility for operation and maintenance of said equipment shall remain with Contractor.
   2. Make, and Owner shall certify, an itemized list of each piece of equipment so operated with the date operation commences.
   3. Itemized list noted above shall be basis for commencement of warranty period for equipment.
   4. Owner shall pay for utility cost arising out of occupancy by Owner during construction.
E. Use and occupancy by Owner prior to acceptance of Work does not relieve Contractor of its responsibility to maintain insurance and bonds required under the Contract until entire Work is completed and accepted by Owner.
F. Prior to date of Final Acceptance of the Work by Owner, all necessary repairs or renewals in Work or part thereof so used, not due to ordinary wear and tear, but due to Defective materials or workmanship or to operations of Contractor, shall be made at expense of Contractor, as required in Document 00700 (General Conditions).
G. Use by Owner of Work or part thereof as contemplated by this Section 01100 shall in no case be construed as constituting acceptance of Work or any part thereof. Such use shall neither relieve Contractor of any responsibilities under Contract, nor act as waiver by Owner of any of the conditions thereof.
H. Owner may specify in the Contract Documents that portions of the Work, including electrical and mechanical systems or separate structures, shall be substantially completed on dates described in paragraph 1.7 of this Section 01100, if any, prior to Substantial Completion of all of the Work. Notify Owner in writing when Contractor considers any such part of the Work ready for its intended use and Substantially Complete and request Owner to issue a Certificate of Substantial Completion for that part of the Work.

1.12 CONTRACTOR USE OF SITE

A. Confine operations at Site to areas permitted by Contract Documents, permits, ordinances, and laws.
B. Do not unreasonably encumber Site with materials or equipment.
C. Assume full responsibility for protection and safekeeping of products stored on premises.
D. Move any stored products that interfere with operations of Owner or other contractor.
E. Coordinate parking, storage, staging, and Work areas with Owner.
F. Owner will provide a storage area for Contractor's equipment and materials.
G. Do not store construction materials in the Drip line of any tree.
H. Access is available to the Site from Skylane Boulevard along the route indicated.
I. Owner will provide a gate keypad code to Contractor. Ensure that the gate is closed at all times Contractor shall contact Owner at least 2 Business Days prior to entering the building and performing Work to allow Owner to arrange access into the building.

1.13 AIR QUALITY STANDARDS

A. Ensure that idling time for all heavy equipment is minimized to reduce on-Site emissions.
B. Maintain equipment in good mechanical condition.
C. Cover trucks hauling dirt.
D. Limit dust emissions during periods of high winds (greater than 15 miles per hour).
E. Replace ground cover in disturbed areas as soon as possible.
F. Enclose, cover, water, or apply soil binders to exposed stockpiles.
G. Remove earth tracked onto neighboring paved roads at least once daily.
H. Limit equipment speed to 10 miles per hour in unpaved areas.

1.14 CONSTRUCTION STAKING AND MONUMENT PROTECTION

A. Owner will perform construction surveying (staking) and other surveying, mapping, or computational activities that Owner deems necessary in its sole judgment, including that which may be used by the Owner to determine pay quantities, or other elements required by or provided for in the Contract Documents.
B. Contractor shall be responsible at its sole expense and direction for construction layout activities (as defined by Owner in its sole and exclusive judgment) and any surveying and/or mapping activities beyond that which will be performed by Owner in accordance with Paragraph A above, including that which may be required to establish and/or document as-built locations, alignments, elevations, grades or quantities required by or provided for in the Contract Documents.
C. Contractor shall be required to prepare and submit to Owner, not less than five Business Days before the Preconstruction Meeting, a Construction Staking Outline consisting of completed draft Construction Survey Request forms detailing the scope, extent, and anticipated schedule of the construction staking proposed by Contractor for each phase of the work and separate Construction Survey Request to be submitted by Contractor during the course of the contract. Owner will review Contractor’s Construction Staking Outline and notify Contractor of required changes, modifications, or deletions to the Construction Staking Outline prior to commencement of Work.
D. Construction staking will be provided in accordance with the approved Construction Staking Outline. Modifications and alterations to the Construction Staking Outline must be submitted and approved by Owner not less than five Business Days in advance of the requested date that construction survey activities are to begin (see Construction Survey

Request: Requested Start Date). Owner reserves the right to reject, require modification and/or deletions to any such subsequent submittal prior to acceptance.

E. Contractor shall be responsible at its sole expense to ready the area required for construction survey activities prior to the arrival of Owner's survey crews on Site. For the purposes of construction surveying activities, readying includes clearing, grubbing and ensuring that the area required for construction surveys is clear of obstacles, debris, materials, equipment or hazards that would unreasonably interfere with or impede Owner's ability in Owner's reasonable judgment, to productively and effectively provide the construction survey requested, establish reliable, stable, survey points and stakes or markings on the ground. Owner reserves the right to delay, discontinue, or suspend construction surveys in areas and situations that in the sole judgment of Owner, are not sufficiently readied for such surveys. Owner is not responsible for delays resulting from the areas required for construction survey activities not being sufficiently readied prior to survey crew's arrival on Site.

F. Contractor is responsible at its sole expense to provide traffic control for construction surveying activities, and shall coordinate with Owner to ensure sufficient traffic control and or safety measures are in place, prior to the arrival of the survey crew on Site. Owner reserves the right to delay, discontinue or suspend construction surveys in areas and situations that in the sole judgment of Owner lack sufficient traffic control and/or safety measures to safely, productively and efficiently accommodate construction survey activities. Owner is not responsible for delays resulting from the areas required for construction survey activities lacking sufficient traffic control and/or safety measures in place prior to survey crew's arrival on Site.

G. Construction Survey Request(s) shall be submitted by Contractor not less than five Business Days prior to the date that the Site will be readied for construction surveying activities (hereafter referred to as the advanced notice period for Construction Survey Request(s)). Scheduling or time changes for a previously accepted Construction Survey Request shall be submitted to Owner not less than two Business Days in advance of the date that the Site will be readied. Requests submitted after 12:00 noon will be held over to the next Business Day for the purposes of beginning the advanced notice period for Construction Survey Requests.

H. Contractor is responsible to ensure that sufficient time is allowed to meet the advanced notice period for Construction Survey Request(s) requirements, to perform Site preparation requirements outlined above, to accommodate Owner's scheduling and resource availability, and for the Owner to complete construction survey activities. Contractor shall coordinate with Owner well in advance of the anticipated need, to ensure that sufficient resources are available to complete the construction surveys requested. No extension of time will be granted for delays resulting from construction survey activities.

I. Contractor shall not begin work on any element of construction until construction staking or related survey activity associated with a Construction Survey Request submitted by the Contractor has been completed. For the purposes of this section: Completion of construction staking or related survey activity shall be determined by Owner. Contractor will be notified by Owner.

J. Contractor shall protect and preserve stakes set by Owner in accordance with the above. Contractor shall be responsible at its sole expense for re-staking or verification of survey stakes, cut/fills or markings that are damaged, destroyed or otherwise made un-useful/reliable by activities within its control in the reasonable judgment of Owner. Owner will provide replacement stakes or verification surveys requested by Contractor at

Contractor's expense in accordance with normal staff rates and charges associated with personnel, equipment and materials required to perform such activities.

K. Whenever Contractor knows or reasonably should know that any Work or construction-related activity required under this Contract may, or is likely to damage, destroy or cause any property or right of way monument(s), survey control point(s), or Bench Marks to become unusable, Contractor shall notify Owner a minimum of five Business Days in advance of such work or activity. Owner will reference property or right of way monument(s) and survey control point(s) by survey, swing ties, or other appropriate means prior to their disturbance or destruction. Owner will replace or restore as appropriate property or right of way monuments and survey control point(s) disturbed, destroyed or otherwise made un-useful by Contractor's activities upon completion of the construction activities.

L. Contractor shall protect and preserve property or right of way monuments and survey control points, and shall be responsible at its sole expense for the cost replacing or restoring damaged or destroyed property or right of way monuments and survey control points, including the cost of preparing and filing a Corner Record or Record of Survey when required under Sec. 8771(b) of the Business and Professions Code of the State of California where sufficient notification to Owner was not provided in accordance with the above. Owner will perform such Surveying and Mapping activities required in Owner's sole judgment, to restore or replace property or right of way monuments and survey control point(s) disturbed, destroyed or otherwise made un-useful by Contractor's activities and required to comply Sec. 8771(b) of the Business and Professions Code of the State of California, in accordance with staff rates and charges in effect for the associated personnel, equipment and materials required to perform such activities.

1.15 PROTECTION OF EXISTING STRUCTURES AND UNDERGROUND FACILITIES

A. The Drawings may indicate existing above- and below-grade structures, drainage lines, storm drains, sewers, water lines, gas lines, electrical lines, and other similar items and Underground Facilities that are known to Owner.

1. At least 2 Business Days, or as otherwise noted, prior to commencement of excavation, notify the owners of the following Underground Facilities:

a. Sewer lines:	Agency, Service Center, Phone: (707) 521-1892
b. Water lines:	Town of Windsor, Phone: (707) 838-1006
c. Telephone conduit:	AT&T, Phone: Common Ground Alliance, 811
d. 12kV Power:	Agency Service Center, Phone (707) 521-1892

B. Where overhead service to a structure, known to receive service, does not exist, then underground service shall be assumed to exist.

C. Perform potholing using hand or mechanical vacuum methods within 24 inches (in any direction) of the Underground Facilities. This may be done on an area-by-area basis, but shall be accomplished at least 7 Days in advance of the date of construction within such area.

D. In addition to reporting, if a utility is damaged, Contractor shall take appropriate action as provided in Document 00700 (General Conditions).

E. Additional compensation or extension of time on account of utilities not indicated or otherwise brought to Contractor's attention including reasonable action taken to protect or repair damage shall be determined as provided in Document 00700 (General Conditions).

F. Provide Utility Protection Plan, including:

1. Indication of all utilities that are expected to conflict with Work, including proposed pothole locations.
2. Proposed measures to protect active utilities from damage and removal of inactive utilities, as necessary.
3. Proposed measures to be taken in the event an active utility is damaged or broken due to Contractor's activities.

1.16 PERMITS

A. Permits, agreements, or written authorizations that are known by Owner to apply to this Project are listed below:
   1. *Cal/OSHA Permit.* Obtain, as applicable, permit(s) as required by Cal/OSHA for the following:
      a. Construction of trenches or excavations that are five feet or more in depth and into which a person is required to descend.
      b. Construction or demolition of any building, structure, or scaffolding for falsework more than three stories high, or the equivalent height (36 feet).
      c. Erection or dismantling of vertical shoring systems more than three stories high, or the equivalent height (36 feet).

      The local Cal/OSHA district office is located at:
      1221 Farmers Lane, Suite 300
      Santa Rosa, CA 95405
      Phone: (707) 576-2388
   2. *County of Sonoma Building Permit(s).*
      a. Obtain from PRMD for Work under this Contract requiring a permit.
   3. *Fire Sprinkler Permit(s).*
      a. Obtain from PRMD (Fire Services) for Work under this Contract requiring a permit.
   4. *North Coast Regional Water Quality Control Board (NCRWQCB), Clean Water Act, Section 401 Water Quality Certification.* Owner is in the process of obtaining the certification.
   5. *US Department of the Army, Corps of Engineers nationwide permit*. Owner is in the process of obtaining the Corps' nationwide permit.
   6. *State Water Resources Control Board (SWRCB), Order No. 2009-0009 – DWQ, National Pollutant Discharge Elimination System (NPDES), General Permit for Storm Water Discharges Associated with Construction and Land Disturbance Activities (Construction General Permit).* The permit is available at Owner's office or is available online at http://www.swrcb.ca.gov/water_issues/programs/stormwater/constpermits.shtml. Owner will file a Notice of Intent with SWRCB to obtain coverage under the General Permit. Contractor shall provide the Storm Water Pollution Prevention Plan, as described in Section 01500 (Temporary Facilities and Controls), in support of the Notice of Intent. Owner has determined that this Project has a combined risk level 2 as defined by SWRCB.
   7. *California Department of Fish and Game 1602, Lake or Streambed Alteration Agreement*. Owner is in the process of obtaining the agreement.
B. All other permits that may be required, including, but not limited to, electrical, mechanical, fire prevention, irrigation, grading, slope protection, tree cutting, dechlorinated water discharge, and flushing water discharge have not been applied for and shall be obtained by Contractor.

C. Applicable permit fees, if specifically listed in Document 00700 (General Conditions), will be reimbursed by Owner to the extent specified therein. All other permit fees shall be paid by Contractor.
D. Furnish copies of Contractor-obtained permits to Owner.

1.17 ACTUAL DAMAGES

A. Owner may incur actual damages, including fines imposed by any regulatory agency, resulting from violation of legal or regulatory requirements where the violations result from Contractor's activities. Violations or threatened violations may subject Owner to fines and other costs or civil liabilities. Contractor shall be liable for and shall pay Owner the amount of any such actual losses in addition to liquidated damages and any other remedies provided by the Contract Documents. This paragraph shall not limit any other remedies Owner may have in law or equity.

1.18 WORK ON WASTEWATER TREATMENT FACILITIES

A. The Project includes modifications of or additions to existing wastewater treatment facilities that serve the public. It is imperative that existing facilities continue to operate, in compliance with permit requirements, throughout the duration of the Work. Contractor shall carry out construction activities in a manner that does not disrupt facility operations.
B. Schedule all construction activities that affect the operation of the facilities with Owner. Provide all labor, equipment, and materials required to maintain the permitted operation on a temporary basis whenever usual plant activities must be interrupted by construction activities. Any temporary operating arrangement shall comply with the facility's permit requirements. Any violation of these requirements may result in fines or other costs to Owner. Contractor shall be responsible for any and all costs, including attorneys' fees, incurred as a result of any violation or threatened violation of permit requirements where the violation or threatened violation arises out of or in connection with Contractor's construction activities. This remedy is in addition to any other remedy existing under this Contract.
C. See paragraph 1.17 of this Section 01100 for information about actual damages.

1.19 RIGHTS-OF-WAY

A. Owner owns the property as indicated.

1.20 DOCUMENT TRACKING

A. Owner will maintain a computerized document control system to monitor the generation, status, and filing of documents. Documents such as, but not limited to, Contracts, Cost Proposals, Change Orders (proposed and approved), Meeting Minutes, Schedules and Reports, Payment Applications, certificates of insurance, Safety Reports, Requests for Information, Requests for Substitutions, correspondence, communications, notices, Submittals, transmittals, and logs shall be submitted electronically for Owner to control the documents using the computerized system. Owner will use the computerized system to track and manage all documents on the Project, after Notice to Proceed, to the greatest extent possible.
B. Provide all Project documents to Owner in electronic format with a minimum of one hard copy, unless otherwise required by the Contract Documents. If file size prohibits electronic transmittal, submit to Owner on compact disk (CD).
C. Provide electronic format documents in searchable portable document format (PDF), unless otherwise required by the Contract Documents or directed in writing by Owner.

PART 2 PRODUCTS

2.1 PRODUCTS ORDERED IN ADVANCE

A. As provided in Section 01200 (Price and Payment Procedures), paragraph 1.5E, and subject to all other provisions of the Contract Documents, Owner will pay for the following materials and equipment prior to incorporation into the Work:
   1. Materials:
      a. None
   2. Equipment:
      a. None

2.2 OWNER-FURNISHED PRODUCTS

A. Owner-Furnished Products:
   a. None
B. Owner's Responsibilities:
   1. Arrange for and deliver Owner-reviewed Shop Drawings, Product Data, and Samples, to Contractor.
   2. Arrange and pay for delivery to Site.
   3. On delivery, inspect products jointly with Contractor.
   4. Submit claims for transportation damage and replace damaged, Defective, or deficient items.
   5. Arrange for manufacturers' warranties, inspections, and service.
C. Contractor's Responsibilities:
   1. Review Owner-reviewed Shop Drawings, Product Data, and Samples.
   2. Receive and unload products at Site; inspect for completeness or damage jointly with Owner.
   3. Handle, store, install, and finish products.
   4. Repair or replace items damaged after receipt.
   5. Install into Project per Contract Documents.

PART 3 EXECUTION – NOT USED

END OF SECTION

SECTION 01200

PRICE AND PAYMENT PROCEDURES

PART 1 GENERAL

1.1 SUMMARY

A. Section includes:
   1. Description of requirements and procedures for determining amount of Work performed and for obtaining payment for Work performed.
   2. Contingency Reserve

1.2 REFERENCES

A. California Public Contract Code
B. Code of Civil Procedure

1.3 SCOPE OF WORK

Work under Contract Documents, or under any Bid item, allowance, or Alternate, shall include all labor, materials, taxes, transport, handling, storage, supervision, administration, and all other items necessary for the satisfactory completion of Work, whether or not expressly specified or indicated.

1.4 DETERMINATION OF QUANTITIES

Quantity of Work to be paid for under any item for which a unit price is fixed in Contract Documents shall be number, as determined by Owner, of units of Work satisfactorily completed in accordance with Contract Documents or as directed by Owner. Unless otherwise provided, determination of number of units of Work so completed will be based, so far as practicable, on actual measurement or count within prescribed or ordered limits, and no payment will be made for Work done outside of limits. Measurements and computations will be made by methods set forth in Contract Documents, including without limitation this Section 01200. If methods are not so set forth, measurements shall be made in any manner which Owner considers appropriate for class of Work measured (e.g., pre-assigned values, percentage completion, units completed or incremental Milestones). Contractor must immediately inform Owner of any disputes regarding quantity measurements and shall immediately supply Owner with any documentation supporting the disputed measurements.

1.5 SCOPE OF PAYMENT

A. Except as otherwise expressly stated in Section 01100 (Summary), payment to Contractor at the unit price or other price fixed in Contract Documents for performing Work required under any item, or (if the Contract is on a single lump sum price basis) at the lump sum price fixed in the Contract Documents for performing all Work required under Contract Documents, and as either may be adjusted pursuant to any approved Change Order or Construction Change Directive, shall be full compensation for completing, in accordance with Contract Documents, all Work required under the item or under Contract Documents, and for all expense incurred by Contractor for any purpose in connection with the performance and completion of said Work, including all incidental Work necessary for completion of the Work.
B. The Contract Sum, whether lump sum, unit price or otherwise, shall be deemed to include all costs necessary to complete required Work, all costs (if any) for loss or damage arising

from nature of Work or prosecution of the Work, and from action of elements. Unless Contract Documents expressly provide otherwise, the Contract Sum shall be deemed to include:

1. Any and all costs arising from any unforeseen difficulties which may be encountered during, and all risks of any description connected with, prosecution of Work or prosecution of Bid item (whether lump sum or unit price) until acceptance by Owner;
2. All expenses incurred due to suspension, or discontinuance of Work or discontinuance of Bid item (whether lump sum or unit price) as provided in Contract Documents;
3. Escalation to allow for cost increases between time of Contract Award and completion of Work or completion of Bid item (whether lump sum or unit price).

C. Whenever it is specified herein that Contractor is to do Work or furnish materials of any class for which no price is fixed in Contract Documents, it shall be understood that Contractor is to do such Work or furnish such materials without extra charge or allowance or direct payment of any sort, and that cost of doing Work or furnishing materials is to be included in price Bid, unless it is expressly specified herein, in particular cases, that Work or material is to be paid for as extra Work.

D. Unit Prices shall apply to Work covered by unit prices so long as actual quantities performed on the Project are not less than 75 percent or greater than 125 percent of the estimated quantities contained in Document 00400 (Bid Form) or otherwise referenced in Section 01100 (Summary). If actual quantities exceed these parameters, then the unit price shall be adjusted by an amount to reflect the Contractor's incremental cost differential resulting from increased or decreased economies of scale.

E. No payment shall be made for materials or equipment not yet incorporated into the Work, except as specified in Section 01100 (Summary).

F. For any materials and equipment referenced in Section 01100 (Summary) as subject to payment prior to incorporation into the Work, where Contractor requests payment on the basis of such materials and equipment not incorporated in the Work, Contractor must satisfy the following conditions:

1. The materials and/or equipment shall be delivered and suitably stored at the Site or at another local location agreed to in writing, for example, a mutually acceptable warehouse;
2. Full title to the materials and/or equipment shall vest in Owner at the time of delivery to the Site, warehouse or other storage location;
3. Obtain a negotiable warehouse receipt, endorsed over to Owner for materials and/or equipment stored in an Off Site warehouse. No payment will be made until such endorsed receipts are delivered to Owner;
4. Stockpiled materials and/or equipment shall be available for Owner inspection, but Owner shall have no obligation to inspect them and its inspection or failure to inspect shall not relieve Contractor of any obligations under the Contract Documents. Materials and/or equipment shall be segregated and labeled or tagged to identify these specific Contract Documents;
5. After delivery of materials and/or equipment, if any inherent or acquired defects are discovered, Defective materials and/or equipment shall be removed and replaced with suitable materials and/or equipment at Contractor's expense;
6. At Contractor's expense, insure the materials and/or equipment against theft, fire, flood, vandalism, and malicious mischief, as well as any other coverages required under the Contract Documents;

7. Contractor's Application for Payment shall be accompanied by a bill of sale, invoice or other documentation warranting that Owner has received the materials and equipment free and clear of all liens and evidence that the materials and equipment are covered by appropriate property insurance and other arrangements to protect Owner's interest therein, all of which must be satisfactory to Owner. This documentation shall include, but not be limited to, conditional releases of mechanics' liens and stop notices from all those providing materials and equipment as to which the Application for Payment relates, as well as unconditional releases of the same from the same as to the previous Application for Payment for which they have not already been provided.

G. Amounts previously paid for materials and equipment prior to incorporation into the Work shall be deducted from amounts otherwise due Contractor as they are incorporated.

1.6 BASIS OF PAYMENT

A. Unit Price Quantities: When estimated quantity for specific portions of Work is listed in Document 00400 (Bid Form), quantity of Work to be paid for shall be actual number of units satisfactorily completed, as determined by Owner and certified by Contractor, in accordance with Contract Documents.

B. Lump Sum: When estimated quantity for specific portion of Work is not indicated and unit is designated as lump sum, payment will be on a lump sum basis for Work satisfactorily completed in accordance with Contract Documents.

C. Allowances: Allowance items (if any) will be paid for as provided in Section 01100 (Summary). Funds authorized for Allowance Work will not be released for Contract payments unless Owner has authorized Allowance Work in writing.

D. Owner does not expressly, or by implication, agree, warrant, or represent in any manner, that actual amount of Work will correspond with amount shown or estimated and reserves right to increase or decrease amount of any class or portion of Work, to leave out entire Bid item or items, or to add work not originally included in Bid or Contract Documents, when in its judgment such change is in best interest of Owner. No change in Work shall be considered a waiver of any other condition of Contract Documents. No claim shall be made for anticipated profit, for loss of profit, for damages, or for extra payment whatever, except as otherwise expressly provided for in Contract Documents, because of any differences between amount of Work actually done and estimated amount as set forth herein, or for elimination of Bid items.

1.7 PROGRESS PAYMENTS

A. Owner's General Manager is authorized to approve progress payments in conformance with Contract Documents and the Auditor/Controller of the County of Sonoma is authorized to process such payments upon their submission by the General Manager.

B. If requested by Contractor, progress payments will be made monthly.

C. Schedule of Values:

1. Within the time set forth in Document 00700 (General Conditions), submit a detailed breakdown of Contractor's Bid by scheduled Work items and/or activities, including coordination responsibilities and Project Record Documents responsibilities. Where more than one Subcontractor comprises the work of a Work item or activity, the Schedule of Values shall show a separate line item for each subcontract. Furnish such breakdown of the total Contract Sum by assigning dollar values (cost estimates) to each applicable Progress Schedule network activity, which cumulative sum equals the total Contract Sum. The format and detail of the breakdown shall be as directed by Owner to

facilitate and clarify future progress payments to Contractor for direct Work under Contract Documents. This breakdown shall be referred to as the Schedule of Values.

2. Contractor's overhead, profit, insurance, cost of bonds (except to the extent expressly identified in a Bid item) and/or other financing, as well as "general conditions costs," (e.g., Site cleanup and maintenance, temporary roads and access, off-Site access roads, temporary power and lighting, security, and the like), shall be prorated through all activities so that the sum of all the Schedule of Values line items equals Contractor's total Contract Sum, less any allowances designated by Owner. Scheduling, record documents and quality assurance control shall be separate line items.
3. Owner will review the breakdown in conjunction with the Progress Schedule to ensure that the dollar amounts of this Schedule of Values are, in fact, fair market cost allocations for the Work items listed. Upon favorable review by Owner, Owner will accept this Schedule of Values for use. Owner shall be the sole judge of fair market cost allocations.
4. Owner will reject any attempt to increase the cost of early activities, i.e., "front loading," resulting in a complete reallocation of moneys until such "front loading" is corrected. Repeated attempts at "front loading" may result in suspension or termination of the Work for default, or refusal to process progress payments until such time as the Schedule of Values is acceptable to Owner.

D. Monthly Report Sheets and Applications for Payment: Contractor shall establish and maintain records of cost of the Work in accordance with generally accepted accounting practices; reconcile the amount of Work completed monthly with Owner, and sign Owner's monthly report sheet certifying to the Work done. Monthly report sheets shall be considered the true record of the Cost of the Work and Contractor shall submit in a form acceptable to Owner an itemized cost breakdown of Contractor's record of Cost of the Work together with supporting data and any certification required by Owner. In addition:

1. On or before the sooner of (a) the 20th Day of each month and (b) receipt of Owner's approval of the updated Schedule as required by Section 01320 (Progress Schedules and Reports), Owner and Contractor will reconcile any differences in the field, based on the reconciled monthly report sheets, and Contractor shall submit to Owner an Application for Payment for the cost of the Work put in place during the period from the 15th Day of the previous month to the 15th Day of the current month, along with the Owner-approved updated Schedule. Such Applications for Payment shall be for the total value of activities completed or partially completed, including approved activity costs, based upon Schedule of Values prices (or Bid item prices if unit price) of all labor and materials incorporated in the Work up until midnight of the last Day of that one month period, less the aggregate of previous payments. Accumulated retainage shall be shown as separate item in payment summary. If Contractor is late submitting its Application for Payment, that Application may be processed at any time during the succeeding one-month period, resulting in processing of Contractor's Application for Payment being delayed for more than a Day for Day basis.
2. Applications for Payment may include, but are not necessarily limited to the following:
   a. Material, equipment, and labor incorporated into the Work, less any previous payments for the same.
   b. Up to 75 percent of the cost of equipment identified in paragraph 1.5F of this Section 01200 (if any), if purchased and delivered to the Site or stored off Site, as may be approved by Owner.

c. Up to 50 percent of the cost of materials identified in paragraph 1.5F of this Section 01200 (if any), specifically fabricated for the Project that are not yet incorporated into the Work.

3. At the time any Application for Payment is submitted, certify in writing the accuracy of the Application and that Contractor has fulfilled all scheduling requirements of Document 00700 (General Conditions) and Section 01320 (Progress Schedules and Reports), including updates and revisions. A responsible officer of Contractor shall execute the certification.
4. No progress payment will be processed prior to Owner receiving all requested, acceptable schedule update information. Failure to submit a schedule update complying with Section 01320 justifies denying the entire Application for Payment, or in Owner's discretion withholding amounts as described in paragraph 1.7E.10 of this Section 01200.
5. Each Application for Payment shall list each Change Order and Construction Change Directive ("CCD") executed prior to date of submission, including the Change Order/CCD Number, and a description of the Work activities, consistent with the descriptions of original Work activities. Submit a monthly Change Order/CCD status log to Owner.
6. If Owner requires substantiating data, submit information requested by Owner, with cover letter identifying Project, Application for Payment number and date, and detailed list of enclosures.
7. If Contractor fails or refuses to participate in monthly Work reconciliations or other construction progress evaluation with Owner, Contractor shall not receive current payment until Contractor has participated fully in providing construction progress information and schedule update information to Owner.

E. Progress Payments

1. Owner will review Contractor's Application for Payment following receipt. If adjustments need to be made to percent of completion of each activity, Owner will make appropriate notations and return to Contractor. Contractor shall revise and resubmit. All parties shall update percentage of completion values in the same manner, i.e., express value of an accumulated percentage of completion to date.
2. Each Application for Payment may be reviewed by Owner and/or inspectors to determine whether the Application for Payment is proper, and shall be rejected, revised, or approved by Owner pursuant to the Schedule of Values prepared in accordance with paragraph 1.7C of this Section 01200.
3. If it is determined that the Application for Payment is not proper and suitable for payment, Owner will return it to the Contractor as soon as practicable, but no later than seven Days after receipt, together with a document setting forth in writing the reasons why the Application for Payment is not proper. If Owner determines that portions of the Application for Payment are not proper or not due under the Contract Documents, then Owner may approve the other portions of the Application for Payment, and in the case of disputed items or Defective Work not remedied, may withhold up to 150 percent of the disputed amount from the progress payment.
4. Pursuant to California Public Contract Code Section 20104.50, if Owner fails to make any progress payment within 30 Days after receipt of an undisputed and properly submitted Application for Payment from Contractor, Owner shall pay interest to the Contractor equivalent to the legal rates set forth in subdivision (a) of Section 685.010 of the Code of

Civil Procedure. The 30-Day period shall be reduced by the number of Days by which Owner exceeds the seven-Day return requirement set forth herein.

5. As soon as practicable after approval of each Application for Payment for progress payments, Owner will pay to Contractor in manner provided by law, an amount equal to 90 percent of the amounts otherwise due as provided in the Contract Documents, or a lesser amount if so provided in Contract Documents, provided that payments may at any time be withheld if, in judgment of Owner, Work is not proceeding in accordance with Contract, or Contractor is not complying with requirements of Contract, or to comply with stop notices or to offset liquidated damages accruing or expected.
6. Before any progress payment or final payment is due or made, Contractor shall submit satisfactory evidence that Contractor is not delinquent in payments to employees, Subcontractors, suppliers, or creditors for labor and materials incorporated into Work. This specifically includes, without limitation, conditional lien release forms for the current progress payment and unconditional release forms for past progress payments.
7. Owner reserves and shall have the right to withhold payment for any equipment and/or specifically fabricated materials that, in the sole judgment of Owner, are not adequately and properly protected against weather and/or damage prior to or following incorporation into the Work.
8. Granting of progress payment or payments by Owner, or receipt thereof by Contractor, shall not be understood as constituting in any sense acceptance of Work or of any portion thereof, and shall in no way lessen liability of Contractor to replace unsatisfactory Work or material, though unsatisfactory character of Work or material may have been apparent or detected at time payment was made.
9. When Owner shall charge sum of money against Contractor under any provision of Contract Documents, amount of charge shall be deducted and retained by Owner from amount of next succeeding progress payment or from any other moneys due or that may become due Contractor under Contract. If, on completion or termination of Contract, such moneys due Contractor are found insufficient to cover Owner's charges against it, Owner shall have right to recover balance from Contractor or Sureties.
10. If Contractor fails to submit an acceptable Progress Schedule update, or fails to bring an acceptable Project Record Drawings update to Progress Payment Meeting, Owner will retain 5% of each Progress Payment amount thereafter (in addition to any other retention) until Owner's acceptance of a Progress Schedule update. This retention shall apply cumulatively.

1.8 FINAL PAYMENT

A. As soon as practicable after all required Work is completed in accordance with Contract Documents, including punchlist, testing, record documents and Contractor maintenance after Final Acceptance, Owner will pay to Contractor, in manner provided by law, unpaid balance of Contract Sum of Work (including without limitation retentions), or whole Contract Sum of Work if no progress payment has been made, determined in accordance with terms of Contract Documents, less sums as may be lawfully retained under any provisions of Contract Documents or by law.

B. Prior progress payments shall be subject to correction in the final payment. Owner's determination of amount due as final payment shall be final and conclusive evidence of amount of Work performed by Contractor under Contract Documents and shall be full measure of compensation to be received by Contractor.

C. Contractor and each assignee under an assignment in effect at time of final payment shall execute and deliver at time of final payment, and as a condition precedent to final payment, Document 00650 (Agreement and Release of Any and All Claims).

1.9 EFFECT OF PAYMENT

A. Payment will be made by Owner, based on Owner's observations at the Site and the data comprising the Application for Payment. Payment will not be a representation that Owner has:
   1. Made exhaustive or continuous on-Site inspections to check the quality or quantity of Work;
   2. Reviewed construction means, methods, techniques, sequences, or procedures;
   3. Reviewed copies of requisitions received from Subcontractors and material suppliers and other data requested by Owner to substantiate Contractor's right to payment; or
   4. Made examination to ascertain how or for what purpose Contractor has used money previously paid on account of the Contract Sum.

1.10 CONTINGENCY RESERVE

A. Owner will authorize and direct Contractor regarding provisions in this paragraph 1.10.
B. Contingency Reserve Amount: as listed in Document 00520 (Agreement).
C. Cost shall be determined for CCD Work as provided in Section 01250 (Modification Procedures) or on a time-and-materials basis if agreed by Contractor and Owner.
D. Prior to final payment, an appropriate Change Order will be issued to reflect actual amounts due Contractor on account of Work covered by this Contingency Reserve, and the Contract Sum will be correspondingly adjusted.

PART 2 PRODUCTS – NOT USED

PART 3 EXECUTION – NOT USED

END OF SECTION

SECTION 01250

MODIFICATION PROCEDURES

PART 1 GENERAL

1.1 SUMMARY

A. Section includes:
   1. Description of general procedural requirements for alterations, Modifications, and extras.

1.2 GENERAL

A. Any change in scope of Work or deviation from Contract Documents including, without limitation, extra Work, or alterations or additions to or deductions from the original Work, shall not invalidate the original Contract, and shall be performed under the terms of the Contract Documents.
B. Only Contractor or Owner may initiate changes in scope of Work or deviation from Contract Documents.
   1. Contractor may initiate changes by submitting RFIs, Notice of Differing Site Conditions, or Notice of Hazardous Waste or Materials Conditions.
      a. RFIs shall be submitted to seek clarification of or request changes in the Contract Documents.
      b. Notices of Differing Site Conditions shall be submitted in accordance with Document 00700 (General Conditions).
      c. Notices of Hazardous Waste or Materials Conditions shall be submitted in accordance with Document 00700 (General Conditions).
   2. Contractor shall be responsible for its costs to implement and administer RFIs throughout the Contract duration. Regardless of the number of RFIs submitted, Contractor shall not be entitled to additional compensation for administrative costs. Contractor shall be responsible for both Owner and its Engineer's administrative costs for answering RFIs where the answer could reasonably be found by reviewing the Contract Documents, as determined by Owner; at Owner's discretion, such costs may be deducted from progress payments or final payment.
   3. Owner may initiate changes by issuing a Supplemental Instruction, which may revise, add to or subtract from the Work.
   4. Owner may initiate changes in the Work or Contract Time by issuing RFPs to Contractor. Such RFPs will detail all proposed changes in the Work and request a quotation of changes in Contract Sum and Contract Time from Contractor.
   5. Owner may also, by Construction Change Directive ("CCD"), order changes in the Work within the general scope of the Contract consisting of additions, deletions, or other revisions, the Contract Sum and Contract Time being adjusted accordingly. A CCD shall be used in the absence of total agreement on the terms of a Change Order and may, upon notice, consist of a Change Order executed by Owner only.

1.3 PROCEDURES

A. Cost Proposal and Procedures: Whenever Contractor is required in this Section 01250 to prepare a Cost Proposal, and whenever Contractor is entitled to submit a Cost Proposal and elects to do so, Contractor shall prepare and submit to Owner for consideration a Cost Proposal using the form attached to this Section 01250. All Cost Proposals must contain a

complete breakdown of costs of credits, deducts, and extras; and itemizing materials, labor, taxes, overhead and profit. All Subcontractor Work shall be so indicated. Individual entries on the Cost Proposal form shall be determined as provided in paragraphs 1.4 and 1.5 of this Section 01250. After receipt of a Cost Proposal with a detailed breakdown, Owner will act promptly thereon.

1. If Owner accepts a Cost Proposal, Owner will prepare Change Order for Owner and Contractor signatures.
2. If Cost Proposal is not acceptable to Owner because it does not agree with cost and/or time included in Cost Proposal, Owner will submit in a response what it believes to be a reasonable cost and/or adjustment, if any. Except as otherwise provided in this Section 01250, Contractor shall have seven Days in which to respond to Owner with a revised Cost Proposal.
3. When necessity to proceed with a change does not allow the Owner sufficient time to conduct a proper check of a Cost Proposal (or revised Cost Proposal), Owner may order Contractor to proceed on basis to be determined at earliest practical date. In this event, value of change, with corresponding equitable adjustment to Contract, shall not be more than increase or less than decrease proposed.

B. Request for Information (RFI): Whenever Contractor requires information regarding the Project or Contract Documents, or receives a request for information from a Subcontractor, Contractor may prepare and deliver an RFI to Owner, using the Contractor interface for Owner's project management software. Contractor must submit time critical RFIs at least 30 Days before scheduled start date of the affected Work activity. Contractor shall reference each RFI to an activity of Progress Schedule and shall note time criticality of the RFI, indicating time within which a response is required. Contractor's failure to reference RFI to an activity on the Progress Schedule and note time criticality on the RFI shall constitute Contractor's waiver of any claim for time delay or interruption to the Work resulting from any delay in responding to the RFI.

1. Owner will respond within 15 Days from receipt of RFI with a written response to Contractor. Contractor shall distribute response to all appropriate Subcontractors.
2. If Contractor is satisfied with the response and does not request change in Contract Sum or Contract Time, then the response shall be executed without a change.
3. If Contractor believes the response is incomplete, Contractor shall issue another RFI to Owner clarifying original RFI. Additionally, Owner may return RFI requesting additional information should original RFI be inadequate in describing condition.
4. If Contractor believes that the response results in change in Contract Sum or Contract Time, Contractor shall notify Owner in writing within 15 Days after receiving the response. If Owner disagrees with Contractor, then Contractor may give notice of intent to submit a Claim as described in Article 12 of Document 00700 (General Conditions), and submit its Claim within 30 Days. If Owner agrees with Contractor, then Contractor must submit a Cost Proposal within 21 Days of receiving the response to the RFI. Contractor's failure to deliver either the foregoing notice and Claim or Cost Proposal by the respective deadlines stated in the foregoing sentences shall result in waiver of the right to file a Cost Proposal or Claim.

C. Supplemental Instruction: Owner may issue Supplemental Instruction to Contractor.

1. If Contractor is satisfied with Supplemental Instruction and does not request change in Contract Sum or Contract Time, then Supplemental Instruction shall be executed without a Change Order.

2. If Contractor believes that Supplemental Instruction results in change in Contract Sum or Contract Time, then Contractor must submit a Cost Proposal to Owner within 21 Days of receiving the Supplemental Instruction.

D. Construction Change Directives: If at any time Owner believes in good faith that a timely Change Order will not be agreed upon using the foregoing procedures, Owner may issue a CCD with its estimated cost and/or time adjustment. Upon receipt of CCD, Contractor shall promptly proceed with the change of Work involved and concurrently respond to Owner's CCD within 10 Days.
   1. Contractor's response must be any one of following:
      a. Return CCD signed, thereby accepting Owner's response, time, and cost.
      b. Submit a (revised if applicable) Cost Proposal with supporting documentation (if applicable, reference original Cost Proposal number followed by letter A, B, etc. for each revision), if Owner so requests.
      c. Give notice of intent to submit a Claim as described in Article 12 of Document 00700 (General Conditions), and submit its Claim within 30 Days.
   2. If the CCD provides for an adjustment to the Contract Sum, the adjustment shall be based on one of the following methods:
      a. Mutual acceptance of a lump sum properly itemized and supported by sufficient substantiating data to permit evaluation.
      b. Unit prices stated in the Contract Documents or subsequently agreed upon.
      c. Cost to be determined in a manner agreed.
   3. CCD signed by Contractor indicates the agreement of Contractor therewith, including adjustment in Contract Sum and Contract Time or the method for determining them. Such agreement shall be effective immediately and shall be recorded as a Change Order.
   4. If Contractor does not respond promptly or disagrees with the method for adjustment in the Contract Sum, the method and the adjustment shall be determined by Owner on the basis of reasonable expenditures and savings of those performing the Work attributable to the change including, in case of an increase in the Contract Sum, a reasonable allowance for overhead and profit. If the parties still do not agree on the price for a CCD, Contractor may file a Claim per Article 12 of Document 00700 (General Conditions). Contractor shall keep and present, in such form as Owner may prescribe, an itemized accounting together with appropriate supporting data. Unless otherwise provided in the Contract Documents, costs for the purposes of this paragraph shall be limited to those provided in paragraphs 1.4 and 1.5 of this Section 01250.
   5. Pending final determination of cost to Owner, amounts not in dispute may be included in Applications for Payment. The amount of credit to be allowed by Contractor to Owner for a deletion or change that results in a net decrease in the Contract Sum shall be actual net cost as confirmed by Owner. When both additions and credits covering related Work or substitutions are involved in a change, the allowance for overhead and profit shall be figured on the basis of net increase, if any, with respect to that change.

E. Owner Requested RFP: Contractor shall furnish a Cost Proposal within 21 Business Days of Owner's RFP. Upon approval of Cost Proposal, Owner will issue a Change Order directing Contractor to proceed with extra Work. If the parties do not agree on the price, Owner may either issue a CCD or decide the issue per Article 12 of Document 00700 (General Conditions). Contractor shall perform the changed Work notwithstanding any claims or disagreements of any nature.

F. Differing Site Conditions: Contractor shall submit Notices of Differing Site Conditions to resolve problems regarding differing underground Site conditions encountered in the

execution of the Work pursuant to paragraph 13.4 of Document 00700 (General Conditions), which shall govern. If Owner determines that a change in Contract Sum or Contract Time is justified, Owner will issue RFP or CCD.

G. Hazardous Waste Conditions: Contractor shall submit Notices of Hazardous Waste or Materials Conditions to resolve problems regarding hazardous materials encountered in the execution of the Work pursuant to paragraph 13.5 of Document 00700 (General Conditions), which shall govern. If Owner determines that a change in Contract Sum or Contract Time is justified, Owner will issue RFP or CCD.

H. All Changes:
   1. Documentation of Change in Contract Sum and Contract Time:
      a. Contractor shall maintain detailed records of Work performed on a time-and-material basis.
      b. Contractor shall document each proposal for a change in cost or time with sufficient data to allow evaluation of the proposal.
      c. Contractor shall, on request, provide additional data to support computations for:
         1) Quantities of products, materials, labor, and equipment.
         2) Taxes.
         3) Justification for any change in Contract Time and new Progress Schedule showing revision due, if any.
         4) Credit for deletions from Contract, similarly documented.
      d. Contractor shall support each claim for additional costs, and for Work performed on a cost-and-percentage basis, with additional information including:
         1) Credit for deletions from Contract, similarly documented.
         2) Origin and date of claim.
         3) Dates and times Work was performed and by whom.
         4) Time records and wage rates paid.
         5) Invoices and receipts for products, materials, equipment, and subcontracts, similarly documented.

I. Correlation of Other Items:
   1. Contractor shall revise Schedule of Values and Application for Payment forms to record each authorized Change Order or CCD as a separate line item and adjust the Contract Sum as shown thereon prior to the next monthly pay period.
   2. Contractor shall revise the Progress Schedules prior to the next monthly pay period.
   3. Contractor shall enter changes in Project Record Documents prior to the next monthly pay period.

J. Responses: For all responses for which the Contract Documents, including without limitation this Section 01250, do not provide a specific time period, recipients shall respond within a reasonable time.

1.4 COST DETERMINATION

A. Total cost of extra Work or of Work omitted shall be the sum of labor costs, material costs, equipment rental costs, and specialist costs as defined herein plus overhead and profit as allowed herein. This limit applies in all cases of claims for extra Work, whether calculating Cost Proposals, Change Orders or CCDs, or calculating claims of all types, and applies even in the event of fault, negligence, strict liability, or tort claims of all kinds, including strict liability or negligence. Contractor may recover no other costs arising out of or connected with the performance of extra Work, of any nature. No special, incidental or consequential damages may be claimed or recovered against Owner, its representatives or agents, whether

arising from breach of Contract, negligence, or strict liability, unless specifically authorized in the Contract Documents.

B. Markup for Overhead and Profit: (Overhead shall be as defined in paragraph 1.8 of this Section 01250)
   1. Markup for overhead and profit on labor for extra Work shall not exceed 15 percent.
   2. Markup for overhead and profit on materials for extra Work shall not exceed 15 percent.
   3. Markup for overhead and profit on owner-operated equipment for extra Work shall not exceed 15 percent.
   4. Markup for overhead and profit on equipment for extra Work shall not exceed 10 percent.
   5. When extra Work is performed by a first tier Subcontractor, Contractor shall receive a 5 percent markup on Subcontractors' total costs of extra Work. First tier Subcontractor's markup on its Work shall not exceed percentages listed in paragraphs 1.4B.1, 1.4B.2, 1.4B.3, and 1.4B.4 immediately above.
   6. When extra Work is performed by a lower tier Subcontractor, Contractor, first tier Subcontractors, and lower tier Subcontractors shall divide (as mutually agreed) a total of 5 percent markup on the lower tier Subcontractors' total costs of extra Work.
   7. Notwithstanding the foregoing, in no case shall the total markup on any extra Work exceed 20 percent of the direct cost, notwithstanding the actual number of Contract tiers.
   8. On proposals covering both increases and decreases in Contract Sum, overhead, profit, and commission shall be allowed on the net increase only as determined in this paragraph 1.4. When the net difference is a deletion, no percentage for overhead profit and commission shall be allowed, but rather a deduction shall apply.
   9. The markup shall include profit, small tools, cleanup, engineering, supervision, warranties, cost of preparing the cost proposal, jobsite overhead, and home office overhead. No markup will be allowed on taxes, insurance, and bonds.

C. Taxes:
   1. All State sales tax, use tax, and Sonoma County and applicable City sales taxes shall be included.
   2. Federal and Excise tax shall not be included.

D. Owner-Operated Equipment: When owner-operated equipment is used to perform extra Work, Contractor will be paid as follows:
   1. Payment for cost of equipment will be made at no more than rates of such equipment established in paragraph 1.5C of this Section 01250.
   2. Payment for cost of labor will be made at no more than rates of such labor established by collective bargaining agreements for type of worker and location of Work, whether or not owner-operator is actually covered by such an agreement.
   3. Invoices for owner-operated equipment need not itemize labor and equipment costs, unless specifically requested by Owner. In any event, the total rate for owner-operated equipment shall not exceed the combined rates for labor and equipment listed in paragraphs 1.4D.1 and 1.4D.2 above.

E. Accord and Satisfaction: Every Change Order and accepted CCD shall constitute a full accord and satisfaction, and release, of all Contractor (and if applicable, Subcontractor) claims for additional time, money or other relief arising from or relating to the subject matter of the change including, without limitation, impacts of all types, cumulative impacts, inefficiency, overtime, delay, and any other type of claim. Contractor may elect to reserve its rights to disputed claims arising from or relating to the changed Work at the time it signs a Change Order or accepts a CCD, but must do so expressly in a writing delivered

concurrently with the executed Change Order or approved CCD, and must also submit a Claim for the reserved disputed items pursuant to Article 12 of Document 00700 (General Conditions) no later than 30 Days of Contractor's first written notice of its intent to reserve rights.

1.5 COST BREAKDOWN

A. Labor: Contractor will be paid cost of labor for workers (including forepersons when authorized by Owner) used in actual and direct performance of extra Work. Labor rate, whether employer is Contractor, Subcontractor or other forces, will be sum of following:
   1. Actual Wages: Actual wages paid shall include any employer payments to or on behalf of workers for health and welfare, pension, vacation, and similar purposes.
   2. Labor surcharge: Payments imposed by local, county, state, and federal laws and ordinances, and other payments made to, or on behalf of, workers, other than actual wages as defined in paragraph 1.5A.1 of this Section 01250, such as taxes and insurance. Labor surcharge shall be and shall not exceed that set forth in Caltrans official labor surcharges schedule which is in effect on date upon which extra Work is accomplished and which schedule is incorporated herein by reference as though fully set forth herein.

B. Material: Only materials furnished by Contractor and necessarily used in performance of extra Work will be paid for. Cost of such materials will be cost, including sales tax, to purchaser (Contractor, Subcontractor or other forces) from supplier thereof, except as the following are applicable:
   1. If cash or trade discount by actual supplier is offered or available to purchaser, it shall be credited to Owner notwithstanding fact that such discount may not have been taken.
   2. For materials salvaged upon completion of extra Work, salvage value of materials shall be deducted from cost, less discounts, of materials.
   3. If cost of a material is, in opinion of Owner, excessive, then cost of material shall be deemed to be lowest current wholesale price at which material is available in quantities concerned delivered to Site, less any discounts as provided in paragraph 1.5B.1 of this Section 01250.

C. Equipment: For Contractor- or Subcontractor-owned equipment, payment will be made at rental rates listed for equipment in Caltrans official equipment rental rate schedule which is in effect on date upon which extra Work is accomplished and which schedule is incorporated herein by reference as though fully set forth herein. If there is no applicable rate for an item of equipment, then payment shall be made for Contractor- or Subcontractor-owned equipment at rental rate listed in the most recent edition of the Association of Equipment Distributors (AED) book. For rented equipment, payment will be made based on actual rental invoices. Equipment used on extra Work shall be of proper size and type. If, however, equipment of unwarranted size or type and cost is used, cost of use of equipment shall be calculated at rental rate for equipment of proper size and type, as determined by Owner. Rates paid shall be deemed to cover cost of fuel, oil, lubrication, supplies, small tools, necessary attachments, repairs and maintenance of any kind, depreciation, storage, insurance, and all incidentals. Unless otherwise specified, manufacturer's ratings, and manufacturer-approved modifications, shall be used to classify equipment for determination of applicable rates. Individual pieces of equipment or tools not listed in said publication and having a replacement value of $100 or less, whether or not consumed by use, shall be considered to be small tools and no payment will be made therefor as payment is included in payment for labor. Payment will not be made for time in which equipment is inoperative due to breakdowns.

1. For Contractor or Subcontractor –owned equipment on Site, payment for equipment use will be for time equipment is in operation on extra Work being performed or on standby as approved by Owner.
2. For rented equipment on Site, the following shall be used in computing rental time of equipment:
   a. When hourly rates are listed, less than 30 minutes of operation shall be considered to be ½ hour of operation.
   b. When daily rates are listed, less than four hours of operation shall be considered to be ½ Day of operation.
3. For equipment that must be brought to Site to be used exclusively on extra Work, cost of transporting equipment to Site and its return to its original location shall be determined as follows:
   a. Owner will pay for costs of loading and unloading equipment.
   b. Cost of transporting equipment in low bed trailers shall not exceed hourly rates charged by established haulers.
   c. Cost of transporting equipment shall not exceed applicable minimum established rates of California Public Utilities Commission.
   d. Owner will not make any payment for transporting and loading and unloading equipment if equipment is used on Work in any other way than upon extra Work.
4. For rented equipment, rental period may begin at time equipment is unloaded at Site of extra Work and terminate at end of the performance of the extra Work or Day on which Owner directs Contractor to discontinue use of equipment, whichever first occurs. Excluding Saturdays, Sundays, and Owner's legal holidays, unless equipment is used to perform extra Work on such Days, rental time to be paid per Day shall be four hours for zero hours of operation, six hours for four hours of operation and eight hours for eight hours of operation, time being prorated between these parameters. Hours to be paid for equipment that is operated less than eight hours due to breakdowns, shall not exceed eight less number of hours equipment is inoperative due to breakdowns.

D. Work Performed by Special Forces or Other Special Services: When Owner and Contractor, by agreement, determine that special service or item of extra Work cannot be performed by forces of Contractor or those of any Subcontractors, service or extra Work item may be performed by specialist. Invoices for service or item of extra Work on basis of current market price thereof may be accepted without complete itemization of labor, material, and equipment rental costs when it is impracticable and not in accordance with established practice of special service industry to provide complete itemization. In those instances wherein Contractor is required to perform extra Work necessitating a fabrication or machining process in a fabrication or machine shop facility away from Site, charges for that portion of extra Work performed in such facility may, by agreement, be accepted as a specialist billing. Owner must be notified in advance of all off-Site Work. In lieu of overhead and profit provided in paragraph 1.4B of this Section 01250, 15 percent will be added to specialist invoice price, after deduction of any cash or trade discount offered or available, whether or not such discount may have been taken.

1.6 FORCE-ACCOUNT WORK

A. If it is impracticable because of nature of Work, or for any other reason, to fix an increase or decrease in price definitely in advance, the Contractor may be directed to proceed at a not-to-exceed (NTE) maximum price which shall not under any circumstances be exceeded. Subject to such limitation, such extra Work shall be paid for at actual necessary cost for

Force-Account Work or at the negotiated cost, as determined by Owner. The cost for Force-Account Work shall be determined pursuant to paragraphs 1.4 and 1.5 of this Section 01250.

B. Force-Account Work shall be used when it is not possible or practical to price out the changed Work prior to the start of that Work. In these cases, Force-Account Work will be utilized during the pricing and negotiation phase of the change. Once negotiations have been concluded and a bilateral agreement has been reached, the tracking of the Work under Force-Account is no longer necessary. Force-Account Work shall also be used when negotiations between Owner and Contractor have broken apart and a bilateral agreement on the value of the changed Work cannot be reached. Owner may approve other uses of Force-Account Work.

C. Whenever any Force-Account Work is in progress, definite price for which has not been agreed on in advance, Contractor shall report to Owner each Business Day in writing in detail amount and cost of labor and material used, and any other expense incurred in Force-Account Work on preceding Day, by using the Cost Proposal form attached hereto. No claim for compensation for Force-Account Work will be allowed unless report shall have been made.

D. Whenever Force-Account Work is in progress, definite price for which has not been agreed on in advance, Contractor shall report to Owner when 75 percent of the NTE amount has been expended.

E. Force-Account Work shall be paid as extra Work under this Section 01250. Methods of determining payment for Work and materials provided in this paragraph 1.6 shall not apply to performance of Work or furnishings of material that, in judgment of Owner, may properly be classified under items for which prices are otherwise established in Contract Documents.

1.7 OWNER-FURNISHED MATERIALS

A. Owner reserves right to furnish materials as it deems advisable, and Contractor shall have no claims for costs and overhead and profit on such materials.

1.8 OVERHEAD DEFINED FOR MODIFICATIONS

A. The following constitutes charges that are deemed included in overhead for all Contract Modifications, including Force-Account Work or CCD Work, whether incurred by Contractor, Subcontractors, or suppliers, and Contractor shall not invoice or receive payment for these costs separately:
   1. Drawings: field drawings, Shop Drawings, as-builts, etc., including submissions of drawings
   2. Routine field inspection of Work proposed
   3. General superintendence
   4. General administration and preparation of cost proposals, schedule analysis, Change Orders, and other supporting documentation as necessary
   5. Computer services
   6. Reproduction services
   7. Salaries of project engineer, superintendent, timekeeper, storekeeper, and secretaries
   8. Janitorial services
   9. Temporary on-Site facilities:
      a. Offices
      b. Telephones
      c. Plumbing
      d. Electrical: Power, lighting

e. Platforms
f. Fencing, etc.
g. Water
h. Sanitation

10. Home office expenses
11. Insurance and Bond premiums
12. Procurement and use of vehicles and fuel used coincidentally in Work otherwise included in the Contract Documents
13. Surveying
14. Estimating
15. Protection of Work
16. Handling and disposal fees
17. Final cleanup
18. Other incidental Work

1.9 RECORDS AND CERTIFICATION

A. Force-Account (cost reimbursement) charges shall be recorded daily and summarized in Cost Proposal form attached hereto. Contractor or authorized representative shall complete and sign form each Day. Contractor shall also provide with the form: the names and classifications of workers and hours worked by each; an itemization of all materials used; a list by size, type, and identification number of equipment and hours operated; and an indication of all Work performed by specialists.
B. No payment for Force-Account Work shall be made until Contractor submits original invoices substantiating materials and specialists charges.
C. Owner shall have the right to audit all records in possession of Contractor relating to activities covered by Contractor's claims for Modification of Contract, including Force-Account Work and CCD Work.
D. Further, Owner will have right to audit, inspect, or copy all records maintained in connection with this Contract, including financial records and Escrow Bid Documents, in possession of Contractor relating to any transaction or activity occurring or arising out of, or by virtue of, the Contract. If Contractor is a joint venture, right of Owner shall apply collaterally to same extent to records of joint venture sponsor, and of each individual joint venture member. This right shall be specifically enforceable, and any failure of Contractor to voluntarily comply shall be deemed an irrevocable waiver and release of all claims then pending that were or could have been subject to the Article 12 of Document 00700 (General Conditions).

PART 2 PRODUCTS – NOT USED

PART 3 EXECUTION – NOT USED

END OF SECTION

COST PROPOSAL AND REQUEST FOR INFORMATION (RFI) FORMS FOLLOW ON NEXT PAGE

(This page intentionally left blank)

COST PROPOSAL (CP)

Service Center Relocation (2025 Aviation Boulevard)
Contract Number 0-706-7 #01

CP Number: _____
Date: _____
In Response To _____
RFP #, etc.

To: Sonoma County Water Agency
Attention: Contract Administration/Inspection
404 Aviation Boulevard, Santa Rosa, CA 95403-9019

Subject Ref. No: _____
(for Project Manager use only)

Phone: (707) 547-1913
Fax: (707) 524-3791

From: [Insert Contractor's Name/Address]
_____
_____

This Cost Proposal is in response to the above-referenced _____ [insert RFP, etc. as applicable].
Brief description of change(s): _____
_____

ITEM DESCRIPTION	PRIME CONTR.	SUB 1	SUB 2	SUB 3	SUB 4	TOTAL
MATERIAL						
DIRECT LABOR COST						
EQUIPMENT						
Other (Specify)						
Total Cost						
Subcontractor's Markup for Overhead & Profit 15 percent						
Contractor's Markup for Overhead & Profit 15 percent (Labor and Materials)						
Contractor's Markup for Overhead & Profit 10 percent (Equipment Rental)						
Markup for Overhead & Profit to Contractor for Subcontractor's Work 5 percent						
GRAND TOTAL						
(percent of Total Cost above not including any Markup for Overhead & Profit) [Grand Total divided by Total Cost]						
REQUESTED CHANGE IN CONTRACT TIME (DAYS)						

By Contractor: _____ Signature: _____ Date: _____

SECTION 01315

PROJECT MEETINGS

PART 1 GENERAL

1.1 SUMMARY

A. Section Includes:
   1. Descriptions of the required Project meetings for the Work. These meetings include:
      a. Post-Notice of Award Meeting
      b. Schedule Review Meetings
      c. Preconstruction Conference
      d. Monthly Progress Meetings
      e. Progress Payment Meetings
      f. Optional Submittal Review Meeting
      g. ISO Training Meetings
      h. Special Meetings
      i. Safety Meetings

1.2 POST-NOTICE OF AWARD MEETING

A. Owner will call for and administer a Post-Notice of Award Meeting at time and place to be announced.
B. Contractor's general superintendent, Contractor's foreman, preparer of Safety Program, preparer of SWPPP, if applicable, and all major Subcontractors shall attend this meeting.
C. Agenda will include, but not be limited to, discussion of requirements for the following items:
   1. Insurance
   2. Bonds
   3. Owner's ISO Program and Contractor Requirements
   4. Notice to Proceed
   5. Commencement of Contract Time
   6. Start of Work at Site
   7. Contractor's Initial and Original Schedule
   8. Contractor's Schedule of Values
   9. Contractor's Schedule of Submittals
   10. Submittal and RFI procedures
   11. Safety Program
   12. SWPPP, if applicable
   13. Permits
   14. Name of Owner's Representative
   15. Other items as appropriate
D. Owner will distribute minutes of Post-Notice of Award Meeting to attendees. Attendees shall have 5 Days to submit comments or additions to minutes. Minutes will constitute final memorialization of results of Post-Notice of Award Meeting.

1.3 SCHEDULE REVIEW MEETINGS

A. Within 30 Days of issuance of Notice to Proceed, meet with Owner and conduct initial review of Contractor's draft Schedule of Submittals, draft Schedule of Values, and Initial Schedule.
B. Authorized representative in Contractor's organization, designated in writing, who will be responsible for working and coordinating with Owner relative to preparation and maintenance of Progress Schedule shall attend the initial schedule review meeting.
C. Contractor shall, within 30 Days from the commencement of Contract Time and prior to commencement of Work at the Site, meet with Owner to review the Original Progress Schedule and construction schedule submittals.
   1. Contractor shall have its manager, superintendent, scheduler, and key Subcontractor representatives, as required by Owner, in attendance. The meeting will take place over a continuous one-Day period.
   2. Owner's review will be limited to submittals' conformance to Contract Documents requirements including, but not limited to, coordination requirements. Owner's review may also include:
      a. Clarifications of Contract Requirements
      b. Directions to include activities and information missing from submittals
      c. Requests to Contractor to clarify its schedule
   3. Within 5 Days of the Schedule Review Meeting, Contractor shall respond in writing to all questions and comments expressed by Owner at the meeting.
D. Owner will administer Schedule Review Meetings and shall distribute minutes of Schedule Review Meetings to attendees. Attendees shall have 5 Days to submit comments or additions to minutes. Minutes will constitute final memorialization of results of Schedule Review Meetings.

1.4 PRECONSTRUCTION CONFERENCE

A. Owner will call for and administer Preconstruction Conference at time and place to be announced.
B. Contractor, all major Subcontractors, and major suppliers shall attend Preconstruction Conference.
C. Agenda will include, but not be limited to, the following items.
   1. Revised/updated schedules
   2. Personnel and vehicle permit procedures
   3. Use of premises
   4. Location of the Contractor's on-Site facilities
   5. Security
   6. Housekeeping
   7. Inspection and testing procedures, on-Site and off-Site
   8. Utility shutdown procedures
   9. Control and reference point survey procedures
   10. Safety Program
   11. Jurisdictional agency requirements
   12. Other items as appropriate
D. Owner will distribute copies of minutes to attendees. Attendees shall have 7 Days to submit comments or additions to minutes. Minutes will constitute final memorialization of results of Preconstruction Conference.

1.5 MONTHLY PROGRESS MEETINGS

A. Owner will schedule and administer monthly progress meetings throughout duration of Work. Progress meetings will be held monthly on approximately the 20th of each month.
   1. Meetings shall be held at Contractor's on-Site office unless otherwise directed by Owner.
   2. An Owner Representative will prepare agenda and distribute it at the meeting to Contractor.
   3. Contractor's general superintendent shall attend these meetings.
   4. Owner will record. Approximately 7 Days after meeting, Owner will distribute minutes to Contractor, who will distribute to those affected by decisions made at meeting. Attendees can either submit comments or additions to minutes prior to the next progress meeting, or may attend the next progress meeting and submit comments or additions there. Minutes will constitute final memorialization of results of meeting.

B. These meetings are considered a critical component of overall monthly schedule update submittal and Contractor shall have appropriate personnel attend. Contractor's job superintendent, major Subcontractors and suppliers, Owner, and others as appropriate shall attend progress meetings.

C. Agenda will contain the following items, as appropriate:
   1. Review, revise as necessary, and approve previous meeting minutes
   2. Review of Work progress since last meeting, including percent complete of each activity
   3. Review of the schedule update submittal
      a. Time impact evaluations for Change Orders and Time Extension Request
      b. Actual and anticipated activity sequence changes
      c. Actual and anticipated duration changes
      d. Actual and anticipated Contractor delays
   4. Review the Application for Payment
   5. Status of Construction Work Schedule, delivery schedules, adjustments
   6. Submittal, RFI, and Change Order status
   7. Review of the Contractor's safety program activities and results, including report on all serious injury and/or damage accidents
   8. Other items affecting progress of Work

1.6 PROGRESS PAYMENT MEETINGS

A. Prior to official application for Payment submission, a meeting will be held on approximately the 20th of each month to review the Application for Payment.
   1. At this meeting, the following items will be reviewed:
      a. Percent complete of each activity
      b. Project Schedule
      c. Hard-copy updates of the Project Record Drawings (Field Set)
   2. Contractor's general superintendent shall attend these meetings.

1.7 OPTIONAL SUBMITTAL REVIEW MEETING

A. At Owner or Contractor's request, in order to facilitate the timeliness of the review process, Owner may schedule a meeting to review the materials submitted.
   1. Request a meeting date with Owner at least 10 Business Days in advance.
   2. Provide complete package of Submittals at least 10 Business Days in advance of the meeting.
   3. The meeting shall take place at Owner's office. Owner will provide the authorized staff to review Submittals during the meeting.

4. Make available for this meeting the job superintendent and/or foreman, Contractor's safety officer, protective coating manufacturer's representative (if applicable), and someone knowledgeable of all Submittals and authorized to make substitutions or changes.

1.8 ISO TRAINING MEETINGS

A. Owner will conduct on-Site ISO awareness training during the first weekly toolbox safety talk conducted for the Project and as needed thereafter as additional Contractor and Subcontractor staff become active on-Site.

1.9 SPECIAL MEETINGS

A. Owner or Contractor may call special meetings by notifying all desired participants and Owner 5 Days in advance, giving reason for meeting. Special meetings may be held without advance notice in emergency situations.
B. At any time during the progress of Work, Owner shall have authority to require Contractor to attend meeting of any or all of the Subcontractors engaged in Work or in other work, and notice of such meeting shall be duly observed and complied with by Contractor.
C. Contractor shall schedule and conduct coordination meetings as necessary to discharge coordination responsibilities in Document 00700 (General Conditions). Contractor shall give Owner 5 Days written notice of coordination meetings. Contractor shall maintain minutes of coordination meetings. Attendees shall have 7 Days to submit comments or additions to minutes. Minutes will constitute final memorialization of results of coordination meetings.

1.10 SAFETY MEETINGS

A. Conduct monthly Contractor Safety Committee meetings.
B. Conduct weekly toolbox safety talks.

PART 2 PRODUCTS – NOT USED

PART 3 EXECUTION – NOT USED

END OF SECTION

SECTION 01320

PROGRESS SCHEDULES AND REPORTS

PART 1 GENERAL

1.1 SUMMARY

A. Perform scheduling of Work under this Contract in accordance with requirements of this Section 01320.
   1. Development of schedule, cost, and resource loading of the Progress Schedule, monthly payment requests, and Project status reporting requirements of the Contract Documents shall employ scheduling as required in this Section 01320.
   2. The Schedule shall be cost-loaded based on Schedule of Values as approved by Owner.
   3. Submit schedules and reports as specified in Document 00700 (General Conditions).

B. Upon Award of Contract, immediately commence development of Initial Schedule to ensure compliance with schedule submittal requirements.

C. Contractor's obligations under this Section 01320 are hereby deemed material obligations justifying Owner's remedies for default if Contractor fails to perform. Nothing in this paragraph 1.1.C of this Document 01320 or the lack of an express statement that any other Contract Documents provision is or is not material shall be considered in determining whether any such other provision is material.

D. Employ competent scheduling personnel or a schedule consultant with experience performing scheduling required herein on two prior, similar projects.

1.2 GENERAL

A. Progress Schedule shall be based on and incorporate Milestone and completion dates specified in Contract Documents.

B. Overall time of completion and time of completion for each Milestone shown on Progress Schedule shall adhere to times in Document 00520 (Agreement), unless an earlier (advanced) time of completion is requested by Contractor and agreed to by Owner. A Change Order shall formalize any such agreement.
   1. Owner is not required to accept an earlier (advanced) schedule, i.e., one that shows early completion date(s) for the Contract Time.
   2. Contractor is not entitled to extra compensation in event agreement is reached on an earlier (advanced) schedule and Contractor completes its Work, for whatever reason, beyond completion date shown in earlier (advanced) schedule but within the Contract Time.
   3. A schedule showing the Work completed in less than the Contract Time, which has been accepted by Owner, shall be considered to have Project Float. The Project Float is the time between the scheduled completion of the Work and Contract Substantial Completion. Project Float is a resource available to both Owner and Contractor.
   4. Project Float Ownership: Neither Owner nor Contractor owns Project Float. The Project owns the Project Float. As such, liability for delay of any Substantial Completion date rests with the party whose actions, last in time, actually cause delay to a Substantial Completion date.
      a. For example, in the event of unexcused delay by Party A and Party B, and if Party A uses some, but not all of the Project Float and Party B later uses remainder of the

Project Float as well as additional time beyond the Project Float, Party B shall be liable for the time that represents a delay to the Substantial Completion date.

b. Under this scenario, Party A would not be responsible for the time since it did not consume all of the Project Float and additional Project Float remained; therefore, the Substantial Completion Date was unaffected.

C. Progress Schedule shall be the basis for evaluating job progress, payment requests, and time extension requests. Responsibility for developing Contract schedule and monitoring actual progress as compared to Progress Schedule rests with Contractor.

D. Failure of Progress Schedule to include any element of the Work or any inaccuracy in Progress Schedule will not relieve Contractor from responsibility for accomplishing the Work in accordance with the Contract. Owner's acceptance of Schedule shall be for its use in monitoring and evaluating job progress, payment requests, and time extension requests, and shall not, in any manner, impose a duty of care upon Owner, or act to relieve Contractor of its responsibility for means and methods of construction.

E. Transmit each item using form approved by Owner or following Section 01330 (Submittal Procedures).

1. Identify Project with the Owner Contract number, and name of Contractor.
2. Provide space for Contractor's approval stamp and Owner's review stamps.
3. Submittals received from sources other than Contractor will be returned to Contractor without Owner's review.

1.3 INITIAL AND ORIGINAL PROGRESS SCHEDULE

A. Initial Schedule submitted within 21 Days after issuance of Notice to Proceed for review at the initial Schedule Review Meeting shall serve as Contractor's schedule for up to 30 Days after the commencement of Contract Time.

1. Initial Schedule must indicate detailed plan for the Work to be completed in first 30 Days after commencement of Contract Time of the Contract; details of planned mobilization of plant and equipment; sequence of early operations; and procurement of materials and equipment. Show Work beyond 30 Days in summary form.

B. Contractor shall submit its Original Schedule for review no later than first Application for Payment and prior to commencement of Work at the Site. Original Schedule and all updates shall comply with all standards herein.

C. All Schedules shall be time-scaled.

D. All Schedules shall be cost- and resource-loaded. Accepted cost- and resource-loaded Schedule will be used as basis for monthly progress payments. Use of Initial Schedule for progress payments shall not exceed 30 Days.

E. Except as otherwise expressly provided in this Section 01320, meet with Owner to review and discuss each Schedule (i.e., Initial, Original and updates) within seven Days after each Schedule has been submitted to Owner.

1. Owner's review and comment on any Schedule shall be limited to Contract conformance (with sequencing, coordination, and Milestone requirements).
2. Contractor shall make corrections to Schedule necessary to comply with Contract requirements and shall adjust Schedule to incorporate any missing information requested by Owner. Resubmit Initial Schedule if requested by Owner.

F. If Contractor is of the opinion that any of the Work included on its Schedule has been impacted, submit to Owner a written TIE in accordance with paragraph 1.8 of this Section 01320. The TIE shall be based on the most current update of the Schedule.

1.4 SCHEDULE FORMAT AND LEVEL OF DETAIL

A. Each Schedule (Initial, Original, and updates) shall indicate all separate submittals, fabrication, procurement and field construction activities required for completion of the Work, including but not limited to the following:
   1. All Contractor, Subcontractor, and assigned Contractor Work shall be shown in a logical Work sequence that demonstrates a coordinated plan of Work for all contractors. The intent is to provide a common basis of acceptance, understanding, and communication, as well as interface with other contractors.
   2. Incorporate Schedule of Submittals into each Schedule.
   3. Activities related to the delivery of Contractor- and Owner-furnished equipment to be Contractor-installed per Contract shall be shown.
   4. All activities shall be identified through codes or other identification to indicate the building (i.e. buildings, Site Work) and Contractor/Subcontractor responsibility to which they pertain.
   5. Break up the Work schedule into activities of durations of approximately 21 Days or less each, except for non-field construction activities or as otherwise deemed acceptable by Owner.
   6. Show the critical path in red. For each activity, show early start, late start, early finish, late finish, durations measured in Days, Project Float, resources, predecessor and successor activities, planned workday/week for the activity, manpower loading, and scheduled/actual progress payments.

B. Seasonal weather conditions (which do not constitute a delay as defined herein) shall be considered in the planning and scheduling of all Work influenced by high or low ambient temperatures or presence of high moisture for the completion of the Work within the allotted Contract Time.

C. Failure by Contractor to include any element of Work required for performance of the Work on the detailed construction schedule shall not excuse Contractor from completing all Work required within the Contract Time.

D. A two-week "look ahead," detailed daily bar chart schedule shall be updated and issued weekly.

E. Prepare schedule using Microsoft® Office Project, Primavera Contractor®, or Primavera Project Planner® (P3®) software for all scheduling, including schedule updates.

1.5 MONTHLY SCHEDULE UPDATE SUBMITTALS

A. Following acceptance of Contractor's Initial Schedule, monitor progress of Work and adjust Schedule each month to reflect actual progress and any anticipated changes to planned activities.
   1. Each Schedule update submitted shall be complete, including all information requested for the Initial Schedule and Original Schedule submittal.
   2. Each update shall continue to show all Work activities including those already completed. Completed activities (shown in blue) shall accurately reflect "as built" information by indicating when activities were actually started and completed, and Contractor warrants the accuracy of as-built information as shown.

B. A meeting will be held in accordance with Section 01315 (Project Meetings) to review the Schedule update submittal. Submit Schedule updates monthly, 7 Days prior to the Monthly Progress Meeting.

C. Within five Days after monthly Schedule update meeting, submit the updated Schedule.

D. Within five Days of receipt of above-noted revised submittals, Owner will either accept or reject monthly schedule update submittal.
   1. If accepted, percent complete shown in monthly update will be basis for Application for Payment by Contractor. The schedule update shall be submitted as part of Contractor's Application for Payment.
   2. If rejected, update shall be corrected and resubmitted by Contractor before the Application for Payment is submitted.

E. Updating, changing or revising of any report, curve, schedule or narrative submitted to Owner by Contractor under this Contract, nor Owner's review or acceptance of any such report, curve, schedule or narrative shall not have the effect of amending or modifying, in any way, the Contract Substantial Completion date or Milestone dates or of modifying or limiting, in any way, Contractor's obligations under this Contract.

1.6 SCHEDULE REVISIONS

A. Updating the Schedule (Initial and Original) to reflect actual progress shall not be considered revisions to the Schedule. Since scheduling is a dynamic process, however, revisions to activity durations and sequences are expected on a monthly basis.

B. To reflect revisions to the Schedule, provide Owner with a written narrative with a full description and reasons for each Work activity revised. For revisions affecting the sequence of Work, provide a schedule diagram that compares the original sequence to the revised sequence of Work. Provide the written narrative and schedule diagram for revisions three Days in advance of the monthly schedule update meeting. Clearly show and discuss any changes in the critical path.

C. Schedule revisions shall not be incorporated into any schedule update until Owner has reviewed the revisions. Owner may request further information and justification for schedule revisions and, within three Days, provide Owner with a complete written narrative response to Owner's request.

D. If Owner does not accept Contractor's revision, and Contractor disagrees with Owner's position, Contractor has seven Days from receipt of Owner's letter rejecting the revision, to provide a written narrative providing full justification and explanation for the revision. Contractor's failure to respond in writing within seven Days of Owner's written rejection of a schedule revision shall be contractually interpreted as acceptance of Owner's position, and Contractor waives its rights to subsequently dispute or file a claim regarding Owner's position. If Contractor files a timely response as provided in this paragraph, and the parties are still unable to agree, Contractor's sole right shall be to file a claim as provided in Document 00700 (General Conditions), Article 12.

E. At Owner's discretion, Contractor can be required to provide Subcontractor certifications of performance regarding proposed schedule revisions affecting said Subcontractors.

1.7 RECOVERY SCHEDULE

A. If a Schedule update shows a Substantial Completion date 21 Days beyond any Contract Substantial Completion date, or individual Milestone completion dates, submit to Owner within seven Days the proposed revisions to recover the lost time. As part of this submittal, provide a written narrative for each revision made to recapture the lost time. If the revisions include sequence changes, provide a schedule diagram comparing the original sequence to the revised sequence of Work. If Owner reasonably requests, show the intended critical path; secure appropriate Subcontractor and supplier consent to the recovery Schedule; submit a narrative explaining trade flow and construction flow changes,

duration changes, added/deleted activities, critical path changes and identify all near critical paths and man-hour loading assumptions for major Subcontractors.

B. The revisions shall not be incorporated into any Schedule update until Owner has reviewed the revisions.
C. If Owner does not accept Contractor's revisions, Owner and Contractor shall follow the procedures in paragraphs 1.6C, 1.6D, and 1.6E of this Section 01320.
D. At Owner's discretion, Contractor can be required to provide Subcontractor certifications for revisions affecting said Subcontractors.

1.8 TIME IMPACT EVALUATION (TIE) FOR CHANGE ORDERS AND OTHER DELAYS

A. When Contractor is directed to proceed with changed Work, prepare and submit, within 14 Days from the direction to proceed, a TIE that includes both a written narrative and a schedule diagram depicting how the changed Work affects other schedule activities. The schedule diagram shall show how Contractor proposes to incorporate the changed Work in the schedule, and how it impacts the current Schedule update critical path or otherwise. Contractor is also responsible for requesting time extensions based on the TIE's impact on the critical path. The diagram shall be tied to the main sequence of scheduled activities to enable Owner to evaluate the impact of changed Work to the scheduled critical path.
B. Comply with the requirements of paragraph 1.8A of this Section 01320 for all types of delays such as, but not limited to, Contractor/Subcontractor delays, adverse weather delays, strikes, procurement delays, fabrication delays, etc.
C. Contractor is responsible for all costs associated with the preparation of TIEs, and the process of incorporating TIEs into the current schedule update.
D. Once agreement has been reached on a TIE, the Contract Time will be adjusted accordingly. If agreement is not reached on a TIE, the Contract Time may be extended in an amount Owner allows, and Contractor may submit a claim for additional time claimed by Contractor as provided in Document 00700 (General Conditions).

1.9 TIME EXTENSIONS

A. Contractor is responsible for requesting time extensions for time impacts that, in the opinion of Contractor, impact the critical path of the current schedule update. Notice of time impacts shall be given in accordance with Document 00700 (General Conditions).
B. Where an event for which Owner is responsible impacts the projected Substantial Completion date, provide a written mitigation plan, including a schedule diagram, which explains how (e.g., increase crew size, overtime, etc.) the impact can be mitigated. Also include a detailed cost breakdown of the labor, equipment, and material Contractor would expend to mitigate Owner-caused time impact. Submit mitigation plan to Owner within 14 Days from the date of discovery of said impact. Contractor is responsible for the cost to prepare the mitigation plan.
C. Failure to request time, provide TIE, or provide the required mitigation plan will result in Contractor waiving its right to a time extension and cost to mitigate the delay.
D. No time will be granted under the Contract Documents for cumulative effect of changes.
E. Owner will not be obligated to consider any time extension request unless requirements of Contract Documents are complied with.
F. Failure of Contractor to perform in accordance with the current schedule update shall not be excused by submittal of time extension requests.
G. Notwithstanding any other provision of this Section 01320, if Contractor does not submit a TIE within the required 14 Days for any issue, Contractor hereby agrees that Contractor does not require a time extension for that issue.

1.10 PROJECT STATUS REPORTING

A. In addition to submittal requirements for scheduling identified in this Section 01320, provide a monthly Project status report (i.e., written narrative report) to be submitted in conjunction with each Schedule as specified herein. Status reporting shall be in form specified in this paragraph 1.10 below.

B. Prepare monthly written narrative reports of status of Project for submission to Owner. Written status reports shall include:

1. Status of major Project components (percent complete, amount of time ahead or behind schedule) and an explanation of how Project will be brought back on schedule if delays have occurred.
2. Progress made on critical activities indicated on each Schedule, including inspections.
3. Explanations for any lack of Work on critical path activities planned to be performed during last month.
4. Explanations for any schedule changes, including changes to logic or to activity durations.
5. List of critical activities scheduled to be performed during the next month.
6. Status of major material and equipment procurement.
7. Any delays encountered during reporting period.
8. Provide printed report indicating actual versus planned resource loading for each trade and each activity. This report shall be provided on weekly and monthly basis.
   a. Actual resource shall be accumulated in field by Contractor, and shall be as noted on Contractor's daily reports. These reports will be basis for information provided in monthly and weekly printed reports.
   b. Explain all variances and mitigation measures.
9. Contractor may include any other information pertinent to status of Project. Include additional status information requested by Owner at no additional cost.
10. Status reports, and the information contained therein, shall not be construed as claims, notice of claims, notice of delay, or requests for changes or compensation.

PART 2 PRODUCTS – NOT USED

PART 3 EXECUTION – NOT USED

END OF SECTION

SECTION 01330

SUBMITTAL PROCEDURES

PART 1 GENERAL

1.1 SUMMARY

A. Section Includes:
   1. Description of general requirements for Submittals for the Work, as applicable:
      a. Procedures
      b. Schedule of Submittals
      c. Construction Material Waste Management Plan
      d. Safety Program
      e. Progress Schedule
      f. Product Data
      g. Shop Drawings
      h. Samples
      i. Coordination Drawings
      j. Quality Assurance/Control Submittals
         1) Design Data
         2) Test Reports
         3) Certificates
         4) Manufacturers' Instructions
         5) Work Plans
      k. Installation, Operation, and Maintenance Manual
      l. Project Record Documents
      m. Storm Water Pollution Prevention Program
      n. Delay of Submittals

1.2 PROCEDURES

A. Submit at Contractor's expense the Submittals required by the Contract Documents.
B. Submit Submittals to Owner in accordance with accepted Schedule of Submittals. If no such schedule is agreed upon, then all Submittals shall be submitted within 35 Days after receipt of Notice of Award from Owner.
C. Transmit each item with the appropriate Submittal transmittal form (included at the end of this Section 01330). Where manufacturer's standard drawings or data sheets are used, they shall be marked clearly to show those portions of the data that are applicable to this Project. Inapplicable portions shall be marked out. Organize Submittals by Specification Section. Submittals containing information about more than one Specification Section will be returned for resubmittal. Submittals shall include all information requested by each Specification Section. Incomplete Submittals will be returned not reviewed by Owner.
D. The data shown on the Submittals shall be complete with respect to quantities, dimensions, specified performance and design criteria, materials, and similar data to show Owner the materials and equipment Contractor proposes to provide and to enable Owner to review the information for the limited purposes specified in this Section 01330. Submittals shall be identified clearly as to material, supplier, pertinent data such as catalog numbers and the use for which it is intended and otherwise as Owner may require to enable Owner to review the Submittal.

E. At the time of each submission, give Owner specific written notice of all variations, if any, that the Submittal may have from the requirements of the Contract Documents, and the reasons therefore. This written notice shall be in a written communication attached to the Submittal transmittal form. In addition, cause a specific notation to be made on each Submittal submitted to Owner for review and approval of each such variation. If Owner accepts deviation, Owner will note its acceptance on the returned Submittal transmittal form and, if necessary, issue appropriate Contract Modification.

F. Submittal coordination and verification is the responsibility of Contractor; this responsibility shall not be delegated in whole or in part to Subcontractors or suppliers. Before submitting each Submittal, review and coordinate each Submittal with other Submittals and with the requirements of the Work and the Contract Documents, and determine and verify:
   1. All field measurements, quantities, dimensions, specified performance criteria, installation requirements, materials, catalog numbers, and similar information with respect thereto;
   2. All materials with respect to intended use, fabrication, shipping, handling, storage, assembly, and installation pertaining to the performance of the Work; and
   3. All information relative to Contractor's sole responsibility for means, methods, techniques, sequences, and procedures of construction and safety precautions and programs incident thereto.

G. Contractor's submission to Owner of a Submittal shall constitute Contractor's representation that it has satisfied its obligations under the Contract Documents, and as set forth immediately above in this paragraph 1.2 of this Section 01330, with respect to Contractor's review and approval of that Submittal.

H. Designation of Work "by others," if shown in Submittals, shall mean that Work will be responsibility of Contractor rather than Subcontractor or supplier who has prepared Submittals.

I. After review by Owner of each Submittal, an electronic copy of each Submittal will be returned to Contractor with actions defined as follows:
   1. NO EXCEPTIONS TAKEN - Accepted subject to its compatibility with future Submittals and additional partial Submittals for portions of the Work not covered in this Submittal. Does not constitute approval or deletion of specified or required items not shown on the Submittal.
   2. MAKE CORRECTIONS NOTED (NO RESUBMISSIONS REQUIRED) - Same as item 1 above, except that minor corrections as noted shall be made by Contractor.
   3. REVISE AS NOTED AND RESUBMIT - Rejected because of major inconsistencies or errors that shall be resolved or corrected by Contractor prior to subsequent review by Owner.
   4. REJECTED - RESUBMIT - Submitted material does not conform to Drawings and/or Specifications in major respect, i.e.: wrong size, model, capacity, or material.

J. Make a complete and acceptable Submittal at least by second submission. Owner reserves the right to deduct monies from payments due Contractor to cover additional costs of review beyond the second submission per paragraph 1.2T. Illegible Submittals will be rejected and returned to Contractor for resubmission. Contractor shall be in breach of the Contract if Contractor's first resubmittal, following a Submittal which Owner determines falls within categories 3 or 4 above, does not fall within categories 1 or 2 above.

K. Favorable review will not constitute acceptance by Owner of any responsibility for the accuracy, coordination, or completeness of the Submittals. Accuracy, coordination, and

completeness of Submittals shall be sole responsibility of Contractor, including responsibility to back-check comments, corrections, and modifications from Owner's review before fabrication. Contractor, Subcontractors, or suppliers may prepare Submittals, but Contractor shall ascertain that Submittals meet requirements of Contract Documents, while conforming to structural space and access conditions at point of installation. Owner's review will be only to assess if the items covered by the Submittals will, after installation or incorporation in the Work, conform to the information given in the Contract Documents and be compatible with the design concept of the completed Project as indicated by the Contract Documents. Favorable review of Submittal, method of Work, or information regarding materials and equipment Contractor proposes to furnish shall not relieve Contractor of responsibility for errors therein and shall not be regarded as assumption of risks or liability by Owner, or any officer or employee thereof, and Contractor shall have no claim under Contract Documents on account of failure or partial failure or inefficiency or insufficiency of any plan or method of Work or material and equipment so accepted. Favorable review shall be considered to mean merely that Owner has no objection to Contractor using, upon Contractor's own full responsibility, plan or method of Work proposed, or furnishing materials and equipment proposed.

L. Unless otherwise specified, Owner's review will not extend to the means, methods, techniques, sequences, or procedures of construction or to safety precautions or programs incident thereto. The review and approval of a separate item as such will not indicate approval of the assembly in which the item functions.

M. Submit complete initial Submittal for those items where required by individual Specification Sections. Complete Submittal shall contain sufficient data to demonstrate that items comply with Specifications, shall meet minimum requirements for submissions cited in Specification Sections, shall include motor data and seismic anchorage certifications, where required, and shall include necessary revisions required for equipment other than first named. If Contractor submits incomplete initial Submittal when complete Submittal is required, Submittal may be returned to Contractor without review.

N. Copy, conform, and distribute reviewed Submittals in sufficient numbers for Contractor's files, Subcontractors, and vendors.

O. After Owner's review of Submittal, revise as noted and resubmit as required. Identify changes made since previous Submittal.
   1. Begin no fabrication or Work that requires Submittals until return of Submittals not requiring resubmittal. Do not extrapolate from Submittals covering similar Work.
   2. Normally, Submittals will be processed and returned to Contractor within 30 Days of receipt.

P. Distribute reviewed Submittals to concerned persons. Instruct recipients to promptly report any inability to comply with provisions.

Q. All Submittals shall be number-identified by Contractor, prior to submission to Owner, in accordance with Owner's numbering format. Owner will provide Contractor with sample numbering format.

R. Submission Requirements:
   1. Deliver Submittals to Owner at least 30 Days before dates reviewed Submittals will be needed.
   2. Initial Submittal of Installation, Operation, and Maintenance Manual shall be:
      a. 45 Days after the date Submittal(s) that pertain to the item are favorably reviewed; and
      b. Prior to start-up and testing of the applicable product or equipment.

3. The following table lists the number of initial Submittals required from Contractor for each type of submission and to whom Contractor shall distribute the information. Submittals requiring resubmission will require the same quantity and distribution as an initial Submittal.

Submittal	**Contractor Submittal**	
	# of Hard copies/ Prints/ Samples	Electronic copy
Items Go To →	Owner	Owner
Schedule of Submittals	1	✓
Construction Material Waste Management Plan	1	✓
Monthly Progress Reports for Construction Material Waste Management Plan	1	✓
Safety Program	1	✓
Fire Protection Plan	1	✓
Progress Schedule	1	✓
Product Data	1	✓
MSDSs	1	✓
Shop Drawings	1	✓
Drawings or any documents larger than 11″ x 17″	2	✓
Samples	4	-
Coordination Drawings	1	✓
Quality Assurance/Control Submittals:		
Design Data	1	✓
Test Reports	1	✓
Certificates	1	✓
Manufacturers' Instructions	1	✓
Work Plans	1	✓
Installation, Operation, and Maintenance Manuals (initial submittal)	1	✓
Installation, Operation, and Maintenance Manuals (final submittal)	4	✓
Major Products List	1	✓
Storm Water Pollution Prevention Program	1	✓
Other Documents	1	✓

4. Accompany each copy of the Submittal(s) with a Submittal transmittal form, containing:
   a. Date, revision date, and Submittal identification number.
   b. Project name and Owner's Contract number.
   c. Contractor's name, address, and job number.
   d. Specification Section number clearly identified.
   e. The quantity of Shop Drawings, Product Data, or Samples submitted.
   f. Notification of deviations from Contract Documents.

g. MSDS for each item complying with OSHA's Hazard Communication Standard 29 CFR 1910.1200.
h. Other pertinent data.

5. Submittal shall include:
   a. Date and revision dates.
   b. Revisions, if any, identified.
   c. Project Name and Contract number.
   d. The names of:
      1) Contractor, Subcontractor, Supplier, Manufacturer, and separate detailer, when pertinent.
   e. Identification of product material by location within the Project.
   f. Relation to adjacent structure or materials.
   g. Field dimensions, clearly identified as such.
   h. Specification Section number and applicable detail reference number and Drawing number.
   i. Applicable reference standards, such as ASTM, ANSI, FS, NEMA, SMACNA or ACI.
   j. A blank space, on the first sheet of each Submittal set, 5" x 4" for the Owner's stamp.
   k. Identification of deviations from Contract Documents.

S. Resubmission requirements:
   1. Shop Drawings:
      a. Revise initial Shop Drawings as required and resubmit as specified for initial Submittals.
      b. Indicate on Shop Drawings any changes that have been made other than those requested by Owner.
   2. Product Data and Samples:
      a. Submit new Product Data and Samples as required for initial Submittals.
   3. Installation, Operation, and Maintenance Manual:
      a. Revise initial Installation, Operation, and Maintenance Manual(s) as required and resubmit as specified for initial Submittals.

T. Charge for resubmissions:
   1. One re-examination of Contractor's Submittals that have been returned for correction or replacement will be included in Owner's budget. Any additional re-examination of Contractor's Submittals will be considered additional scope services to be paid by Contractor through Owner. Contractor shall pay Owner (or Owner may deduct from any progress or final payment), for engineering personnel, on an hourly basis at 2.5 times direct payroll expenses, and for consultant personnel time at 1.25 times the amount billed Owner.

1.3 SCHEDULE OF SUBMITTALS

A. Submit a preliminary Schedule of Submittals as required herein and by Document 00700 (General Conditions). Utilize Owner's Submittal Log form to prepare Schedule of Submittals. Owner's Submittal Log form will be provided to Contractor in electronic media format compatible with Microsoft® Excel 2000.
B. Schedule of Submittals will be used by Owner to schedule its activities relating to review of Submittals. Schedule of Submittals shall indicate a spreading out of Submittals and early Submittals of long-lead-time items and of items that require extensive review.
C. Schedule of Submittals will be reviewed by Owner and shall be revised and resubmitted until accepted by Owner.

D. Unless otherwise specified, transmit Submittals for associated items simultaneously to ensure that information is available for checking each item when it is received. Identify on the Submittal transmittal form that such Submittals should be reviewed together.

1.4 CONSTRUCTION MATERIAL WASTE MANAGEMENT PLAN

A. Submit Construction Material Waste Management Plan specific to these Contract Documents as required by Section 01741 (Construction Material Waste Management Plan).

1.5 SAFETY PROGRAM

A. Submit Safety Program specific to these Contract Documents as required by Section 01540 (Site Security and Safety).

1.6 PROGRESS SCHEDULE

A. See Section 01320 (Progress Schedules and Reports) for schedule and report requirements. Section 01320 (Progress Schedules and Reports) shall control in any conflict with this Section 01330.
B. Progress schedules, schedule updates, and reports shall be submitted using software described in paragraph 1.4E of Section 01320 (Progress Schedules and Reports). Electronic files shall be complete copies, including all programs and electronic coding.

1.7 PRODUCT DATA

A. Within ten Days after Contract Time commences to run, submit complete list of major products proposed for use (included at the end of this Section 01330), with name of manufacturer, telephone number, trade name, and model number of each product. Tabulate data by Specification Section.
B. Product or Catalog Data:
   1. Manufacturers' standard drawings shall be modified to delete non-applicable data or include applicable data.
   2. Manufacturers' catalog sheets, brochures, diagrams, schedules, charts, illustrations, and other standard descriptive data:
      a. Mark each copy to identify pertinent materials, products, or models.
      b. Show dimensions and clearances required, performance characteristics and capacities, wiring diagrams and controls.
   3. For products specified only by reference standards, give manufacturer, trade name, model or catalog designation, and reference standards.
   4. Material Safety Data Sheets:
      a. In addition to MSDSs otherwise required by the Contract Documents, submit MSDSs for any products containing a hazardous substance such as paints, solvents, thinners, varnish, lacquer, glues and adhesives, mastics, sealants, equipment fuel, equipment lubricant, or other materials needed for the Project as required by the individual Specification Sections or as otherwise specified in the Contract Documents.
      b. MSDSs must be submitted with Product Data Submittal in order for the Submittal to be reviewed.
C. Supplemental Data:
   1. Mark each copy to identify applicable products, models, options, and other data. Supplement manufacturer's standard data to provide information unique to Project.

1.8 SHOP DRAWINGS

A. Minimum Sheet Size: 8½ inches by 11 inches. All others: Multiples of 8½ inches by 11 inches, 34 inches by 44 inches maximum.
B. The electronic copy will be marked with Owner's review comments and returned to Contractor.
C. Mark each copy to identify applicable products, models, options, and other data; supplement manufacturers' standard data to provide information unique to Work.
D. Include manufacturers' installation instructions when required by Specification Section.
E. If Contractor submits Shop Drawings for items that Shop Drawings are not specified, Owner will not be obliged to review them.
F. Contractor is responsible for procuring copies of Shop Drawings for its own use as it may require for the progress of the Work.
G. Shop Drawings shall be drawn to scale and completely dimensioned, showing plan view together with such sectional views as are necessary to clearly show construction detail, materials, and methods.

1.9 SAMPLES

A. Submit full range of manufacturers' standard colors, textures, and patterns for Owner's selection.
B. Submit Samples to illustrate functional and aesthetic characteristics of product, with integral parts and attachment devices. Coordinate Submittal of different categories for interfacing Work.
C. Include identification on each Sample, giving full information.
D. Sizes: Unless otherwise specified, provide the following:
   1. Paint Chips: Manufacturers' standard
   2. Flat or Sheet Products: Minimum 6 inches square, maximum 12 inches square
   3. Linear Products: Minimum 6 inches, maximum 12 inches long
   4. Bulk Products: Minimum 1 pint, maximum 1 gallon
E. Full size Samples may be used in Work upon approval by Owner.
F. Field Samples and Mock-ups (if applicable):
   1. Erect field Samples and mock-ups at Site in accordance with requirements of Specification Sections. If testing is conducted, record and certify results and full Contract compliance.
   2. Modify or make additional field Samples and mock-ups as required to provide appearance and finishes approved by Owner.
   3. Approved field Samples and mock-ups may be used in Work upon approval by Owner.
   4. Construct or prepare as many additional Samples as may be required, as directed by the Owner, until desired textures, finishes, and/or colors are obtained.
   5. Accepted Samples and mock-up shall serve as the standard of quality for the various units of Work.
G. No review of a Sample shall be taken in itself to change or modify the requirements in the Contract Documents.
H. Finishes, materials, and workmanship in the completed Work shall match accepted Samples.
I. Samples will not be returned to Contractor.

1.10 COORDINATION DRAWINGS

A. Layout Drawings: As soon as practical and in no case starting later than 30 Days after issuance of Notice to Proceed, Contractor shall prepare layout drawings of all equipment and piping at not less than ¼" scale. The layout drawings shall show the location of all equipment as well as locations of all valves, piping, fittings, and other items requiring access for service and maintenance. The layout drawings shall also show beams, ceiling heights, walls, floor-to-floor dimensions, columns, doors and other major architectural and structural drawings.
   1. At Contractor's option, the layout drawings may be produced using computer-aided drafting.

B. Coordination with Subcontractors: Within 30 Days after the date of the Notice to Proceed, send one reproducible and two prints of the layout drawings to Subcontractors who shall then make on the reproducible their own routings, etc., as required to determine interrelationship and possible interferences with mechanical equipment, piping and architectural or structural features. The marked-up reproducibles shall then be returned to Contractor no less than 30 Days after receipt by the Subcontractors.

C. Composite Drawings: Contractor shall prepare preliminary composite drawings of such layout drawings, incorporating all the information and routings provided by the Subcontractors. (At Contractor's option, a group of transparent overlays may be substituted, provided that they clearly show the relationship of all proposed installations and they are pin-registered/aligned.)
   1. The preliminary composite drawings or the overlays shall be reviewed during a series of meetings called by Contractor and attended by Owner, at which all Subcontractors and trades shall be represented in order to review and resolve any real or apparent interferences or conflicts.

D. Agreement by Subcontractors: After all conflicts or interferences are resolved, Contractor shall develop a final set of composite drawings showing the agreed-upon routing, layout and juxtaposition of all , piping, major conduit, valves, panels, controls, lighting fixtures and all major mechanical and electrical installations. In areas where no mechanical and electrical installations are installed, each Subcontractor shall be responsible for its own Work and pay its own costs in connection therewith. In preparation of all the final composite drawings, large scale details as well as cross and longitudinal sections shall be prepared as required to fully delineate all conditions. Particular attention shall be given to the locations, size, and clearance dimensions of equipment items, shafts, and similar features. These final composite drawings shall then be signed off by Subcontractors and Contractor, indicating their awareness of and agreement with the indicated routings and layouts and their interrelationship with the adjoining or contiguous Work. Thereafter, no unauthorized deviations will be permitted and, if made without knowledge or agreement of Owner, such unauthorized Work will be subject to removal and correction at no additional cost to Owner.

E. Minor Changes: In preparing the composite drawings, minor changes in duct, pipe or conduit routings that do not affect the intended function may be made as required to avoid space conflicts, when mutually agreed, but items may not be resized or exposed items relocated without Owner's written approval. No changes shall be made in any wall or chase locations, ceiling heights, door swings or locations, window or other openings or other features affecting the function or aesthetic effect of the building. If conflicts or interferences cannot be satisfactorily resolved, Owner shall be notified and Owner's decision obtained.

F. Distribution of Composite Drawings: After the final composite drawings have been agreed upon and signed by all Subcontractors, provide and distribute four prints and one electronic copy to each of the Subcontractors for reference and record purposes. Make similar distribution of all supplementary composite drawings, initiated by other Subcontractors. Also provide final composite drawings to Owner. All Subcontractors desiring additional prints of such drawings, beyond the basic distribution indicated above in this paragraph 1.10F, shall arrange for and pay the cost of same.

G. Record Composite Drawings: The record copies of the final composite drawings shall be retained by Owner, Contractor, and each Subcontractor as a working reference. All Shop Drawings, prior to their Submittal to Owner, shall be compared with the composite drawings and developed accordingly by Contractor and the responsible Subcontractor. Any revisions to the composite drawings that may become necessary during the progress of the Work shall be noted by Contractor and all Subcontractors and shall be neatly and accurately recorded on the record copies. Contractor and each Subcontractor shall be responsible for the up-to-date maintenance of Subcontractor record copies of the composite drawings and for keeping two copies available at the Site. Contractor and each Subcontractor shall utilize the composite drawings, and any subsequent changes thereto, in the development of Subcontractor "Project Record Documents" drawings.

H. Timely Submission: The composite drawings need not be submitted as a whole, but shall be submitted in all cases in ample time to avoid construction delay. The coordination drawings may lack complete data in certain instances pending receipt of Shop Drawings, but sufficient space shall be allotted for the items affected. When final information is received, such data shall be promptly inserted on the composite drawings.

I. Improperly Coordinated Work: No extra compensation will be paid for relocating any duct, pipe, conduit, or other material that has been installed without proper coordination between Contractor and all Subcontractors involved. If any improperly coordinated Work or Work installed that is not in accordance with the approved composite drawings, necessitates additional Work by Contractor or other Subcontractors, the costs of all such Work shall be borne solely by Contractor or the Subcontractor responsible for the Work.

J. Incorporation of Changes: All changes in the scope of Work due to revisions formally issued and approved shall be shown on the composite drawings.

K. Quality Draftsmanship: All Work on Shop Drawings, layout drawings, coordination drawings, and composite drawings shall be performed by competent drafters and shall be clear and fully legible. Owner shall be the sole judge of the acceptability of the drawings.

L. Structural Cutting: Obtain specific positive written instructions from Owner before cutting beams or other structural members, walls, arches, or lintel, and comply with such instructions.

1.11 QUALITY ASSURANCE/CONTROL SUBMITTALS

A. Design Data:
   1. Indicate that material or product conforms to or exceeds specified requirements.

B. Test Reports:
   1. Indicate that material or product conforms to or exceeds specified requirements.
   2. Reports may be from recent or previous tests on material or product, but shall be acceptable to Owner. Comply with requirements of each individual Specification Section.

C. Certificates:
   1. Indicate that material or product conforms to or exceeds specified requirements.

2. Submit supporting reference data, affidavits, and certifications as appropriate.
3. Certificates may be recent or from previous test results on material or product, but shall be acceptable to Owner.

D. Manufacturers' Instructions:
1. Include manufacturers' printed instructions for delivery, storage, assembly, installation, startup, adjusting, and finishing.
2. Identify conflicts between manufacturers' instructions and Contract Documents.

E. Work Plans:
1. Submit work plans with sufficient detail to clearly indicate compliance with Specification requirements and to clearly describe by what means and methods Contractor intends to execute the subject Work.

1.12 INSTALLATION, OPERATION, AND MAINTENANCE MANUAL (IF APPLICABLE)

A. Sheet Size: 8½ x 11 inch
B. Drawing Size: Reduce drawings or diagrams to an 8½ x 11 inch or 11 x 17 inch size. However, where reduction is not practical to ensure readability, fold larger drawings separately and place in vinyl envelopes bound into the binder. Identify vinyl envelopes with drawing numbers.
C. Binding: Bind in heavy-duty white vinyl D-ring binders (locking rings), not more than 3" thick, with standard three-hole punch, two inside pockets, and a clear overlay (front pocket). Binder shall be no more than 80% full.
D. Multiple Items: Multiple items may be combined into one binder; tab each section with plastic-coated dividers.
E. Volumes: create volumes, numbered sequentially, as appropriate.
F. Page Protectors: Provide plastic sheet lifters prior to first page and following last page.
G. Binder title: Include the following title on front and spine of binder(s):

SERVICE CENTER RELOCATION (2025 AVIATION BOULEVARD)
INSTALLATION, OPERATION, AND MAINTENANCE MANUAL, [YEAR]
VOLUME [__(number) of __(total number of volumes)]

H. Contents:
1. Introductory Information:
   a. Title page providing the same information as paragraph 1.12G above
   b. Contractor's name, address, and telephone number
   c. Table of Contents: include a complete table of contents in each volume, if applicable
2. Include, at a minimum, the following detailed information for each item as applicable and as required by individual Specification Sections:
   a. Bill of materials: include manufacturer, complete model number, quantity, and equipment location.
   b. Operational information:
      1) Equipment function, normal operating characteristics, limiting operations.
      2) Operating instructions for startup, routine and normal operation, regulation and control, shutdown, and emergency conditions.
      3) A list of recommended spare parts with a price list, predicted life of parts subject to wear, and a list of spare parts provided under this Contract.
      4) Instrumentation or tag numbers relating the equipment back to the Contract Documents.

c. Maintenance information:
   1) Assembly, disassembly, installation, alignment, adjustment, and checking instructions.
   2) Lubrication and maintenance instructions including specific type and amount of lubricant and recommended lubrication interval.
   3) Outline, cross-section, and assembly drawings; engineering data; and electrical diagrams, including elementary diagrams, labeled wiring diagrams, connection diagrams, word description of wiring diagrams and interconnection diagrams.
   4) Test data and performance curves.
   5) Parts lists or other documents packed with equipment when delivered.
   6) Instrumentation or tag numbers relating the equipment back to the Contract Documents.
   7) Include a filled-out Maintenance Summary form (included at the end of this Section 01330) as the first page(s) of each manual. Complete maintenance requirements in detail. Reference to the manual will not be accepted. For equipment items involving components or sub-units, a Maintenance Summary for each operating component or sub-unit is required.

d. Troubleshooting guide.

e. Delete information that is not pertinent to the Project.

3. Index: alphabetical by keyword

I. Final Submittal: Upon favorable review of Installation, Operation, and Maintenance Manual(s) by Owner, deliver the final approved Installation, Operation, and Maintenance Manual(s). Electronic media format copy shall include all tables, charts, drawings, codes and all other matters reflected in hard copies.

1.13 PROJECT RECORD DOCUMENTS

A. Submit Project Record Documents as required by Section 01780 (Project Record Documents).

1.14 STORM WATER POLLUTION PREVENTION PROGRAM (IF APPLICABLE)

A. Submit Storm Water Pollution Prevention Program if required by Section 01500 (Temporary Facilities and Controls).

1.15 DELAY OF SUBMITTALS

A. Delay of Submittals by Contractor is considered avoidable delay. Liquidated damages incurred because of late Submittals will be assessed to Contractor.

PART 2 PRODUCTS – NOT USED

PART 3 EXECUTION – NOT USED

END OF SECTION

MAJOR PRODUCTS LIST, TRANSMITTAL FORMS, AND MAINTENANCE SUMMARY FORM FOLLOW THIS PAGE

MAJOR PRODUCTS LIST

	Specification Section Number	Product	Name of Manufacturer, Trade Name, Model Number	Telephone number
1.	13120	Pre-Engineered Metal Building		

SUBMITTAL, TRANSMITTAL NO. _____

Project Name: Service Center Relocation (2025 Aviation Boulevard)	Date Received:
Owner: Sonoma County Water Agency Attention: Construction Management Section 404 Aviation Boulevard Santa Rosa, CA 95403-9019	Checked By:
Contractor: Address: Attention:	Log Page: Specification Section Number: 1st Submittal ☐ Resubmittal ☐

By Date

Contractor's signature above shall constitute Contractor's representation that it has satisfied its obligations under the Contract Documents with respect to Contractor's review and approval of Submittals.

Date Transmitted:	Previous Transmittal Date:

No. Copies	Description	Manufacturer	Dwg. or Data No.	Action Taken*

Remarks:

* The action designated above is in accordance with the following legend:

A – No Exceptions Taken
B – Make Corrections Noted (No Resubmission Required)
C – Revise as Noted and Resubmit
D – Rejected - Resubmit
1. Not enough information for review
2. No reproducibles submitted
3. Copies illegible
4. Not enough copies submitted
5. Wrong sequence number
6. Wrong resubmittal number
7. Wrong Specification section number
8. Wrong form used
9. See comments

Comments:

By Date

INSTALLATION, OPERATION, AND MAINTENANCE MANUAL, TRANSMITTAL NO. _____

Project Name: Service Center Relocation (2025 Aviation Boulevard)	Date Received:
Owner: Sonoma County Water Agency 404 Aviation Boulevard Santa Rosa, CA 95403-9019	Attention: Construction Management Section
Contractor: Address: Attention:	Log Page: Specification Section Number: 1st Submittal ☐ Resubmittal ☐

By Date

Contractor's signature above shall constitute Contractor's representation that it has satisfied its obligations under the Contract Documents with respect to Contractor's review and approval of Submittals.

Date Transmitted:	Previous Transmittal Date:

No. Copies	Description	Manufacturer	Dwg. or Data No.	Action Taken*

Remarks:

* The action designated above is in accordance with the following legend:

A – No Exceptions Taken
B – Make Corrections Noted (No Resubmission Required)
C – Revise as Noted and Resubmit
D – Rejected - Resubmit– this manual Submittal is deficient in the following area:

1. Equipment record sheets
2. Functional description
3. Assembly, disassembly, installation, alignment, adjustment, and checkout instructions
4. Operating instructions

D – (continued)

5. Lubrication and maintenance instructions
6. Troubleshooting guide
7. Parts list and ordering instructions
8. Organization (indexing and tabbing)
9. Wiring diagrams and schematics specific to installation
10. Outline, cross section, and assembly diagrams
11. Test data and performance curves
12. Tag or equipment identification numbers
13. See comments

Comments:

By Date

MAINTENANCE SUMMARY

1. EQUIPMENT ITEM:_____
2. MANUFACTURER:_____
3. MODEL NUMBER:_____
4. SERIAL NO. (IF APPLICABLE):_____
5. NAMEPLATE DATE (HP VOLTAGE, SPEED, ETC.):_____
6. MANUFACTURER'S LOCAL REPRESENTATIVE
   NAME:_____
   ADDRESS: _____
   TELEPHONE NUMBER: _____ FAX NUMBER: _____
7. MAINTENANCE REQUIREMENTS:

MAINTENANCE OPERATION

List briefly each maintenance operation required and refer to specific information in manufacturer's standard maintenance manual, if applicable. _____

_____

_____

_____

FREQUENCY

List required frequency of each maintenance operation. _____

_____

_____

_____

LUBRICANT (IF APPLICABLE)

Refer by symbol to lubricant list as required. _____

_____

_____

_____

COMMENTS

_____

_____

_____

8. LUBRICANT LIST: REFERENCE SYMBOL
   (A-) (B-) (C-) (D-)

List symbols used. List equivalent lubricants as distributed and recommended by manufacturer’s representative listed in item 6 above.

_____

_____

9. SPARE PARTS:

Include your recommendations regarding what spare parts, if any, should be kept on the job.

_____

_____

SECTION 01410

REGULATORY REQUIREMENTS

PART 1 GENERAL

1.1 SUMMARY

A. Section includes: regulatory requirements that may be applicable to Contract Documents.
B. Specific reference in the Specifications to codes and regulations or requirements of regulatory agencies shall mean the latest printed edition of each adopted by the regulatory agency in effect at the time of the opening of Bids, except as may be otherwise specifically stated in the Contract Documents.
C. Should any conditions develop not covered by the Contract Documents wherein the finished Work will not comply with current codes, a Change Order detailing and specifying the required Work shall be submitted to and approved by Owner before proceeding with the Work.

1.2 REFERENCES TO REGULATORY REQUIREMENTS

A. Codes, laws, ordinances, rules and regulations referred to shall have full force and effect as though printed in full in these Specifications. Code, laws, ordinances, rules and regulations are not furnished to Contractor, because Contractor is assumed to be familiar with these requirements. The listing of applicable codes, laws, and regulations for hazardous waste abatement Work in the Contract Documents is supplied to Contractor as a courtesy and shall not limit Contractor's responsibility for complying with all applicable laws, regulations, or ordinances having application to the Work. Where conflict among the requirements or with these Specifications occurs, the most stringent requirements shall be used.
B. Conform to referenced codes, laws, ordinances, rules and regulations.

1.3 CODES

A. Codes that apply to Contract Documents include, but are not limited to, the following:
   1. CBC (Part 2, Title 24, CCR, including, without means of limitation, Sections 16A, 102A.23, 308, 420A, 504-506, 904.2.6, 1019 and 1604)
   2. CEC (Part 3, Title 24, CCR)
   3. CMC (Part 4, Title 24, CCR)
   4. CPC (Part 5, Title 24, CCR),
   5. State Elevator Safety Regulations (Part 7, Title 24, CCR)
   6. UBC
   7. UPC
   8. UMC
   9. NEC
   10. Sonoma County Code

1.4 LAWS, ORDINANCES, RULES, AND REGULATIONS

A. During prosecution of Work to be done under Contract Documents, comply with applicable laws, ordinances, rules and regulations, including, but not limited to, the following:
   1. Federal:
      a. Americans With Disabilities Act of 1990
      b. 29 CFR, Section 1910.1001, Asbestos

c. 40 CFR, Subpart M, National Emission Standards for Asbestos
d. Executive Order 11246
e. Federal Endangered Species Act
f. Clean Water Act

2. State of California:
   a. California Code of Regulations, Titles 5, 8, 19, 21, 22, 24 and 25
   b. California Public Contract Code
   c. California Health and Safety Code
   d. California Government Code
   e. California Labor Code
   f. California Civil Code
   g. California Code of Civil Procedure
   h. CPUC General Order 95, Rules for Overhead Electric Line Construction
   i. CPUC General Order 128, Rules for Construction of Underground Electric Supply and Communications Systems
   j. Cal/OSHA
   k. OSHA: Hazard Communications Standards
   l. California Endangered Species Act
   m. Water Code
   n. Fish and Game Code
3. State of California Agencies:
   a. State and Consumer Services Agency
   b. Office of the State Fire Marshall
   c. Office of Statewide Health Planning and Development
   d. Department of Fish and Game
   e. Bay Area Air Quality Management District
   f. San Francisco Bay Regional Water Quality Control Board
   g. North Coast Regional Water Quality Control Board
      1) Order No. 93-61
      2) Order No. 81-73
      3) Clean Water Act Section 401
4. County of Sonoma:
   a. Ordinance 3836R
   b. Building permit
   c. Electrical permit
   d. Grading permit
   e. Encroachment permit
   f. Valley Oak Protection Ordinance
5. Local Agencies:
   a. Applicable City Ordinances
   b. Northern Sonoma County Air Pollution Control District
6. Other Requirements:
   a. National Fire Protection Association (NFPA): Pamphlet 101, Life Safety.
   b. References on Drawings or in Specifications to “code” or “building code” not otherwise identified shall mean the codes specified in this Section 01410, together with all additions, amendments, changes, and interpretations adopted by code authorities of the jurisdiction.

B. Have access to all of the foregoing within 24 hours.

C. Other Applicable Laws, Ordinances and Regulations:
   1. Work shall be accomplished in conformance with all applicable laws, ordinances, rules and regulations of federal, state, and local governmental agencies and jurisdictions having authority over the Project.
   2. Work shall be accomplished in conformance with all rules and regulations of public utilities and utility districts.
   3. Where such laws, ordinances rules, and regulations require more care or greater time to accomplish Work, or require better quality, higher standards or greater size of products, Work shall be accomplished in conformance to such requirements with no change to the Contract Time and Contract Sum, except where changes in laws, ordinances, rules, and regulations occur subsequent to the time of opening of the Bids.

D. Change Orders and Claims. The California Public Contract Code (including but not limited to Section 7105 (d)(2)) applies to all contract procedures for changes, time extensions, change orders (time and money), and claims, and per California Government Code Section 930.2, et seq., Contractor's timely compliance with these procedures is a mandatory prerequisite to filing a Government Code Claim. Any change, alteration, modifications, waiver, or omission to implement these procedures, shall have no legal effect unless approved in advance in a fully executed Change Order approved by the Board. Federal construction law (U.S. v. Holspuch 326 U.S. 234) and the jurisprudence of the Federal District of Columbia Circuit shall supplement (but not supersede) California law on construction claims topics including but not limited to, termination claims, home office overhead claims, and delay/disruption claims.

1.5 PRECEDENCE

A. Where Drawings or Specifications require or describe products or execution of better quality, higher standard or greater size than required by applicable codes, ordinances and standards, Drawings and Specifications shall take precedence so long as such increase is legal.

B. Where no requirements are identified on Drawings or in Specifications, comply with all requirements of applicable codes, ordinances and standards of governing authorities having jurisdiction.

C. Conflicts between referenced regulatory requirements: Comply with the one establishing the more stringent requirement.

D. Conflicts between referenced regulatory requirements and Contract Documents: Comply with the one establishing the more stringent requirement.

1.6 REQUIRED PROVISIONS ON CONTRACT CLAIM RESOLUTION

A. The California Public Contract Code specifies required provisions on resolving contract claims less than $375,000, which are set forth below, and constitute a part of this Contract.
   1. For the purposes of this section, "Claim" means a separate demand by Contractor of $375,000 or less for (1) a time extension, (2) payment or money or damages arising from Work done by or on behalf of Contractor arising under the Contract Documents and payment of which is not otherwise expressly provided for or the Claimant is not otherwise entitled to, or (3) an amount the payment of which is disputed by Owner. In order to qualify as a Claim, the written demand must state that it is a Claim submitted under Article 12 of Document 00700 (General Conditions) and be submitted in compliance with all requirements of Document 00700 (General Conditions), Article 12. Separate Claims which total more than $375,000 do not qualify as a "separate demand of $375,000 or less," as referenced above, and are not subject to this section.

2. A voucher, invoice, payment application, or other routine or authorized form of request for payment is not a Claim for purposes of this section. If such request is disputed as to liability or amount, then the disputed portion of the submission may be converted to a Claim under this section by submitting a separate claim in compliance with Contract Documents claim submission requirements.
3. Caution: This section does not apply to tort claims and nothing in this section is intended nor shall be construed to change the time periods for filing tort claims or actions specified by Chapter 1 and Chapter 2 of Part 3 of Division 3.6 of Title 1 of the California Government Code.

B. Procedure:
1. The Claim must be in writing, submitted in compliance with all requirements of Document 00700 (General Conditions), Article 12, including, but not limited to, the time prescribed by and including the documents necessary to substantiate the Claim, pursuant to Document 00700 (General Conditions), paragraph 12.3. Claims must be filed on or before the day of final payment. Nothing in this section is intended to extend the time limit or supersede notice requirements for the filing of claims as set forth in Document 00700 (General Conditions), Article 12 or elsewhere in the Contract Documents.
2. For Claims of fifty thousand dollars ($50,000) or less
   a. Owner shall respond in writing within 45 days of receipt of the Claim, or
   b. Owner may request in writing within 30 days of receipt of the Claim, any additional documentation supporting the Claim or relating to any defenses or claims Owner may have against Claimant.
      1) If additional information is thereafter required, it shall be requested and provided in accordance with this section, upon mutual agreement of Owner and Claimant.
      2) Owner's written response to the Claim, as further documented, shall be submitted to Claimant within 15 days after receipt of further documentation or within a period of time no greater than taken by Claimant in producing the additional information, whichever is greater.
3. For Claims over Fifty Thousand Dollars ($50,000) and less than or equal to $375,000:
   a. Owner shall respond in writing within 60 days of receipt of the Claim, or
   b. Owner may request in writing within 30 days of receipt of the Claim, any additional documentation supporting the Claim or relating to any defenses or claims Owner may have against Claimant.
      1) If additional information is thereafter required, it shall be requested and provided in accordance with this section, upon mutual agreement of Owner and Claimant;
      2) Owner's written response to the Claim, as further documented, shall be submitted to Claimant within 30 days after receipt of further documentation or within a period of time no greater than taken by Claimant in producing the additional information, whichever is greater.
4. Meet and Confer:
   a. If Claimant disputes Owner's written response, or Owner fails to respond within the time prescribed above, Claimant shall notify Owner, in writing, either within 15 days of receipt of Owner's response or within 15 days of Owner's failure to timely respond, and demand an informal conference to meet and confer for settlement of

the issues in dispute. Upon demand Owner will schedule a meet and confer conference within 30 days for settlement of the dispute.

b. Following the meet and confer conference, if the Claim or any portion remains in dispute, Claimant may file a claim as provided in Chapter 1 (commencing with Section 900) and Chapter 2 (commencing with Section 910) of Part 3 of Division 3.6 of Title 1 of the California Government Code. For purposes of those provisions, the running of the period of time within which a claim must be filed shall be tolled from the time Claimant submits its written claim as set forth in paragraph 12.2.B of Document 00700 (General Conditions), until the time that Claim is denied as a result of the meet and confer process, including any period of time utilized by the meet and confer process.

1.7 COMPLIANCE WITH AMERICANS WITH DISABILITIES ACT

A. Contractor acknowledges that, pursuant to the Americans with Disabilities Act (ADA), programs, services, and other activities provided by a public entity to the public, whether directly or through a contractor, must be accessible to the disabled public. Contractor shall provide the services specified in the Contract Documents in a manner that complies with the ADA and any and all other applicable federal, state, and local disability rights legislation. Contractor agrees not to discriminate against disabled persons in the provision of services, benefits, or activities provided under this Agreement and further agrees that any violation of this prohibition on the part of Contractor, its employees, agents, or assigns shall constitute a material breach of the Contract Documents.

1.8 SUBSTITUTION OF SECURITIES IN LIEU OF RETENTION

A. In accordance with the provisions of Public Contract Code Section 22300, substitution of securities for any moneys withheld under Contract Documents to ensure performance is permitted under following conditions:

1. At request and expense of Contractor, securities listed in Section 16430 of the Government Code, bank or savings and loan certificates of deposit, interest bearing demand deposit accounts, standby letters of credit, or any other security mutually agreed to by Contractor and Owner which are equivalent to the amount withheld under retention provisions of Contract shall be deposited with Controller or with a state or federally chartered bank in California, as the escrow agent, who shall then pay such moneys to Contractor. Upon satisfactory completion of Contract, securities shall be returned to Contractor.
2. Alternatively, Contractor may request and Owner shall make payment of retentions earned directly to the escrow agent at the expense of Contractor. At the expense of Contractor, Contractor may direct the investment of the payments into securities and receive the interest earned on the investments upon the same terms provided for in this Section 01410 for securities deposited by Contractor. Upon satisfactory completion of Contract Documents, Contractor shall receive from escrow agent all securities, interest, and payments received by the escrow agent from Owner, pursuant to the terms of this Section 01410. Pay to each Subcontractor, not later than 20 Days after receipt of the payment, the respective amount of interest earned, net of costs attributed to retention withheld from each Subcontractor, on the amount of retention withheld to insure the performance of Contractor.
3. Contractor shall be beneficial owner of securities substituted for moneys withheld and shall receive any interest thereon.

4. Enter into escrow agreement with Controller according to Document 00680 (Escrow Agreement for Security Deposits in Lieu of Retention), as authorized under Public Contract Code Section 22300, specifying amount of securities to be deposited, terms and conditions of conversion to cash in case of default of Contractor, and termination of escrow upon completion of Contract Documents.
5. Public Contract Code Section 22300 is hereby incorporated in full by this reference.

PART 2 PRODUCTS – NOT USED

PART 3 EXECUTION – NOT USED

END OF SECTION

SECTION 01420

REFERENCES AND DEFINITIONS

PART 1 GENERAL

1.1 SUMMARY

A. Section Includes: Reference standards, abbreviations, symbols, definitions, and terminology used in Contract Documents.
B. Full titles are given in this Section for standards cited in other Sections of Specifications.
C. Material and workmanship specified by reference to number, symbol, or title of specific standard such as state standard, commercial standard, federal specifications, technical society, or trade association standard, or other similar standard, shall comply with requirements of standards except when more rigid requirements are specified or required by applicable codes.
D. Standards referred to, except as modified herein, shall have full force and effect as though printed in the Contract Documents. Standards are not furnished to Contractor because manufacturers and trades involved are assumed to be familiar with their requirements.

1.2 REFERENCE TO STANDARDS AND SPECIFICATIONS OF TECHNICAL SOCIETIES; REPORTING AND RESOLVING DISCREPANCIES

A. Reference to standards, specifications, manuals, or codes of any technical society, organization, or association, or to the laws or regulations of any governmental authority, whether such reference be specific or by implication, shall mean the latest standard, specification, manual, code, or laws or regulations (including all amendments, changes, errata, addenda, and supplements) in effect at the time of opening of Bids, except as may be otherwise specifically stated in the Contract Documents.
   1. When an edition or effective date of a reference is not given, it shall be understood to be the current edition or latest revision published as of the date of opening Bids.
      a. Exception: Comply with issues in effect as listed in governing legal requirements.
B. If during the performance of the Work, Contractor discovers any conflict, error, ambiguity, or discrepancy within the Contract Documents or between the Contract Documents and any provision of any such law or regulation applicable to the performance of the Work or of any such standard, specification, manual, or code, or of any instruction of any supplier, report it in writing at once by submitting a RFI to Owner, and do not proceed with the Work affected thereby until consent to do so is given by Owner.
C. Except as otherwise specifically stated in the Contract Documents or as may be provided by Change Order, CCD, or Supplemental Instruction, the provisions of the Contract Documents shall take precedence in resolving any conflict, error, ambiguity, or discrepancy between the provisions of the Contract Documents and:
   1. The provisions of any such standard, specification, manual, code, or instruction (whether or not specifically incorporated by reference in the Contract Documents); or
   2. The provisions of any such laws or regulations applicable to the performance of the Work (unless such an interpretation of the provisions of the Contract Documents would result in violation of such law or regulation).
D. No provision of any such standard, specification, manual, code, or instruction shall be effective to change the duties and responsibilities of Owner, Contractor, or Engineer, or any of their subcontractors, consultants, agents, or employees, from those set forth in the

Contract Documents, nor shall it be effective to assign to Owner, Engineer, or any of their consultants, agents, representatives or employees any duty or authority to supervise or direct the furnishing or performance of the Work or any duty or authority to undertake responsibility inconsistent with the provisions of the Contract Documents.

E. Comply with the applicable portions of standards and specifications published by the technical societies, institutions, associations, and governmental agencies referred to in Specifications.

F. Referenced Grades, Classes, and Types: Where an alternative or optional grade, class, or type of product or execution is included in a reference but is not identified in Drawings or in Specifications, provide the highest, best, and greatest of the alternatives or options for the intended use and prevailing conditions.

G. Jobsite Copies:
   1. Obtain and maintain at the Site copies of reference standards identified on Drawings and in Specifications in order to properly execute the Work.
   2. At a minimum, the following shall be readily available at the Site:
      a. Safety Codes: State of California, Division of Industrial Safety regulations.

H. ASTM and ANSI References: Specifications and Standards of the American Society for Testing and Materials International (ASTM International) and the American National Standards Institute (ANSI) are identified in the Drawings and Specifications by abbreviation and number only and may not be further identified by title, date, revision, or amendment. It is presumed that Contractor is familiar with and has access to these nationally- and industry-recognized specifications and standards.

1.3 ABBREVIATIONS

A. Listed hereinafter are the various organizations or references which may appear in the Contract Documents, along with their respective acronyms and/or abbreviations:

AA	Aluminum Association
AABC	Associated Air Balance Council
AAMA	Architectural Aluminum Manufacturers Association
AAP	Affirmative Action Program
AASHTO	American Association of State Highway and Transportation Officials
AB	Aggregate Base
ABMA	American Bearing Manufacturers Association
ABPA	American Board Products Association
ACI	American Concrete Institute
ADA	Americans with Disabilities Act
AED	Association of Equipment Distributors
AFBMA	Anti-friction Bearing Manufacturers Association
AGA	American Gas Association
AGMA	American Gear Manufacturers Association
AISC	American Institute of Steel Construction
AISI	American Iron and Steel Institute
AITC	American Institute of Timber Construction
AMCA	Air Moving and Conditioning Association, Inc.
ANSI	American National Standards Institute (formerly American Standards Association)
APA	American Plywood Association

API	American Petroleum Institute
ARI	Air-Conditioning and Refrigeration Institute
ASCE	American Society of Civil Engineers
ASHRAE	American Society of Heating, Refrigeration, and Air-Conditioning Engineers
ASME	American Society of Mechanical Engineers
ASTM	ASTM International
AWCI	Association of the Wall and Ceiling Industries
AWG	American Wire Gauge
AWPA	American Wood-Preservers' Association
AWPB	American Wood Preservers Bureau
AWS	American Welding Society
AWWA	American Water Works Association
BHMA	Builders Hardware Manufacturers Association
BIL	Basic Insulation Level
BOD	Biological Oxygen Demand
Cal/OSHA	California Occupational Safety and Health Administration
Caltrans	State of California, Department of Transportation
CBC	California Building Code
CCD	Construction Change Directive
CCR	California Code of Regulations
CEC	California Electric Code or California Energy Commission
CF	Cubic Foot or Cubic Feet
CFM	Cubic Feet per Minute
CFR	Code of Federal Regulations
CGA	Common Ground Alliance
CI	Chlorine Institute, Inc.
CISPI	Cast Iron Soil Pipe Institute
CL	Center Line
CLMFI	Chain Link Fence Manufacturers Institute
CMAA	Crane Manufacturers Association of America, Inc.
CMC	California Mechanical Code
CO	Change Order
COE	United States Army Corps of Engineers
CPC	California Plumbing Code
CPM	Critical Path Method
CPUC	California Public Utilities Commission
CRA	California Redwood Association
CRSI	Concrete Reinforcing Steel Institute
CS	Commercial Standards, U.S. Department of Commerce
CSA	Canadian Standards Association
CY	Cubic Yard or Cubic Yards
DFPA	Douglas Fir Plywood Institute
DFT	Dry Film Thickness
DHI	Door and Hardware Institute
EIA	Electronic Industries Association
EPA	Environmental Protection Agency
ETL	Electrical Testing Laboratories

FGMA	Flat Glass Marketing Association
FPS	Feet per Second or Fluid Power Society
FS	Federal Specifications
GA	Gypsum Association
GPM	Gallons Per Minute
Greenbook	Standard Specifications for Public Works Construction
HI	Hydraulic Institute
HMI	Hoist Manufacturer's Institute
HMMA	Hollow Metal Manufacturer's Association
HP	Horse Power
HPMA	Hardwood Plywood Manufacturers Association
HVAC	Heating, Ventilating and Air Conditioning
IACS	International Annealed Copper Standards
IAPMO	International Association of Plumbing and Mechanical Officials
ICBO	International Conference of Building Officials
ICEA	Insulated Cable Engineers Association
ID	Identification or Inside Diameter
IEEE	Institute of Electrical and Electronic Engineers
IES	Illuminating Engineering Society
ISA	International Society of Arboriculture
ISAS	Instrumentation, Systems, and Automation Society
ISO	International Organization for Standardization
JATC	Joint Apprenticeship Training Committee
JV	Joint Venture
LBE	Local Business Enterprise
LLC	Limited Liability Corporation or Company
LS	Lump Sum
M.I.	Middle Initial
M/WBE	Minority and/or Woman-Owned Business Enterprise
MBE	Minority Business Enterprise
MGD	Million Gallons per Day
MIA	Masonry Institute of America
MIA	Marble Institute of America
MLSFA	Metal Lath/Steel Framing Association
MS	Military Specifications
MSDS	Material Safety Data Sheet
MSS	Manufacturers Standardization Society of the Valve & Fitting Industry
NAAMM	National Association of Architectural Metal Manufacturers
NACE	National Association of Corrosion Engineers
NBS	National Bureau of Standards
NEC	National Electric Code
NEMA	National Electric Manufacturers Association
NESC	National Electrical Safety Code
NFoPA	National Forest Products Association
NFPA	National Fire Protection Association
NIC	Not In Contract
NIOSH	National Institute for Occupational Safety and Health
NIST	National Institute of Standards and Technology

NPT	National Pipe Thread
NRMCA	National Ready Mixed Concrete Association
NSF	National Sanitation Foundation
NTS	Not to Scale
NWWDA	National Wood Windows and Doors Association
OC	On Center
OD	Outside Diameter
OSHA	Occupational Safety and Health Administration
OSHPD	Office of Statewide Health Planning and Department
PCA	Portland Cement Association
PCI	Prestressed Concrete Institute
PDI	Plumbing and Drainage Institute
PG&E	Pacific Gas and Electric Company
PL	Property Line
PLC	Programmable Logic Controller
PM	Preventive Maintenance
PPM	Parts per Million
PR	Proposal Request
PRMD	Permits and Resource Management Department, County of Sonoma
PS	Product Standard, U. S. Department of Commerce
PSF or psf	Pounds per Square Foot
PSI or psi	Pounds per Square Inch
PSIG	Pounds per Square Inch Gauge
PVC	Polyvinyl chloride
RC	Relative Compaction
RFI	Request for Information
RFP	Request for Proposals
RFS	Request for Substitution
RIS	Redwood Inspection Service
RPM	Revolutions per Minute
SAE	Society of Automotive Engineers
SDeI	Steel Deck Institute
SDoI	Steel Door Institute
SDR	Standard Dimension Ratio
SF	Square Foot or Square Feet
SFM	State of California, Office of State Fire Marshal
SIDR	Standard Inside Dimension Ratio
SIGMA	Sealed Insulating Glass Manufacturers Association
SJI	Steel Joint Institute
SMACNA	Sheet Metal and Air Conditioning Contractors National Association
SPIB	Southern Pine Inspection Bureau
SSPC	Society for Protective Coating (formerly Steel Structures Painting Council)
SWI	Steel Window Institute
TCA	Tile Council of America
TIE	Time Impact Evaluation
TMS	The Masonry Society
TPI	Truss Plate Institute Inc.
UBC	Uniform Building Code

UFC	Uniform Fire Code
UL	Underwriters' Laboratories, Inc.
UMC	Uniform Mechanical Code
UPC	Uniform Plumbing Code
USA	Underground Service Alert
USACE	United States Army Corps of Engineers
USC	United States Code
VOC	Volatile Organic Compounds
WBE	Women's Business Enterprise
WCLIB	West Coast Lumber Inspection Bureau
WHI	Warnock Hersey International
WIC	Woodwork Institute of California
WWPA	Western Wood Products Association
WWPI	Western Wood Preservers Institute

B. Abbreviations in Specifications:

cm	centimeter (centimeters)
Co.	Company
Corp.	Corporation
cu	Cubic
dia	diameter
Div	Division
ft	foot (feet)
g	gram (grams) or Standard Acceleration of Gravity
gal	gallon (gallons)
gpd	gallons per Day
hr	hour
in	inch (inches)
Inc.	Incorporated
kg	kilogram (kilograms)
km	kilometer (kilometers)
kVAR	kilovolts amperes reactive
kW	kilowatt
l	liter (liters)
lb(s)	Pound(s)
m	meter (meters)
mfr	manufacturer
mg	milligram (milligrams)
ml/mls	milliliter (milliliters)
mm	millimeter (millimeters)
No	number
sq	square
Sta	Station
T & G	tongue and groove
Typ	typical
US	United States
yd	yard (yards)

C. Abbreviations on Drawings:
   1. As listed for Specifications above.
   2. Additional abbreviations, used only on Drawings, are indicated thereon.

1.4 SYMBOLS

A. Symbols in Specifications:

:	"shall be" or "shall" - where used within sentences or paragraphs
#1	number
1#	pound
&	and
%	percent
C	Centigrade
F	Fahrenheit
°	degree
/	"per," except where used to combine words; example: power/fuel, and in that case it means "and"
"	inch (inches)
'	foot (feet)
@	at

B. Symbols on Drawings:
   1. As listed for Specifications above.
   2. Symbols, used only on Drawings, are indicated thereon.

1.5 DEFINITIONS

A. Wherever any of the words or phrases defined below, or a pronoun used in place thereof, is used in any part of the Contract Documents, it shall have the meaning here set forth. In the Contract Documents, the neuter gender includes the feminine and masculine, and the singular number includes the plural.
B. The following definitions shall apply regardless of capitalization unless the context otherwise requires:
   1. Wherever words "as directed," "as required," "as permitted," or words of like effect are used, it shall be understood that direction, requirements, or permission of Owner is intended. Words "sufficient," "necessary," "proper," and the like shall mean sufficient, necessary, or proper in judgment of Owner. Words "approved," "acceptable," "satisfactory," "favorably reviewed," or words of like import, shall mean approved by, or acceptable to, or satisfactory to, or favorably reviewed by Owner.
   2. Wherever the word "may" or "ought" is used, the action to which it refers is discretionary. Wherever the word "shall" or "will" is used, the action to which it refers is mandatory.
   3. Addenda: Written or graphic instruments issued prior to the opening of Bids, which clarify, correct, or change the bidding requirements or the Contract Documents. Addenda shall not include the minutes of the Pre-Bid Conference and/or Site Visit.

4. Agency: The Sonoma County Water Agency (SCWA), a public agency of the State of California, acting under and by virtue of the authority vested in the Owner by the laws of the State of California.
5. Agreement (Document 00520): Agreement is the basic Contract Document that binds the parties to construction Work. Agreement defines relationships and obligations between Owner and Contractor and by reference incorporates Conditions of Contract, Drawings, and Specifications and contains Addenda and all Modifications subsequent to execution of Contract Documents.
6. Alternate: Work added to or deducted from the base Bid, if accepted by Owner.
7. Application for Payment: Written application for monthly or periodic progress or final payment made by Contractor complying with the Contract Documents.
8. Approved Equal: Approved in writing by Owner as being of equivalent quality, utility and appearance.
9. Asbestos: Any material that contains more than one percent asbestos and is friable or is releasing asbestos fibers into the air above current action levels established by OSHA or Cal/OSHA.
10. Bid: The offer or proposal of the Bidder submitted on the prescribed form(s) setting forth the prices for the Work to be performed.
11. Bidder: One who submits a Bid.
12. Bidding Documents: All documents comprising the Project Manual (including all documents and Specification Sections listed in Document 00010 [Table of Contents]), including documents supplied for bidding purposes only and Contract Documents.
13. Board: The Board of Directors of the Owner.
14. Business Day: Any Day other than Saturday, Sunday, and the following days that have been designated as holidays by Owner. If a holiday falls on a Saturday, the preceding Friday will be the holiday. If a holiday falls on a Sunday, the following Monday will be the holiday.
    a. New Year's Day, January 1;
    b. Martin Luther King Jr.'s Birthday, third Monday in January;
    c. Lincoln's Birthday, February 12;
    d. Presidents' Day, third Monday in February;
    e. Memorial Day, last Monday in May;
    f. Independence Day, July 4;
    g. Labor Day, first Monday in September;
    h. Veterans' Day, November 11;
    i. Thanksgiving Day, as designated by the President;
    j. The Day following Thanksgiving Day;
    k. Christmas Day, December 25; and
    l. Each day appointed by the Governor of California and formally recognized by the Sonoma County Board of Supervisors as a day of mourning, thanksgiving, or special observance.
15. By Owner: Work that will be performed by Owner or its agents at the Owner's expense.

16. By Others: Work that is outside scope of Work to be performed by Contractor under this Contract, which will be performed by Owner, other contractors, or other means.
17. Change Order: A written instrument prepared by Owner and signed by Owner and Contractor, stating their agreement upon all of the following:
    a. a change in the Work;
    b. the amount of the adjustment in the Contract Sum, if any; and
    c. the amount of the adjustment in the Contract Time, if any.
18. Code Inspector: A local or state agency responsible for the enforcement of applicable codes and regulations.
19. Concealed: Work not exposed to view in the finished Work, including within or behind various construction elements.
20. Construction Change Directive ("CCD"): A written order prepared and signed by Owner, directing a change in the Work and stating a proposed basis for adjustment, if any, in the Contract Sum or Contract Time, or both.
21. Contract Conditions or Conditions of the Contract: Consists of two parts: General Conditions and Supplementary Conditions.
    a. General Conditions are general clauses that are common to the Owner Contracts, including Document 00700 (General Conditions).
    b. Supplementary Conditions modify or supplement General Conditions to meet specific requirements for these Contract Documents, including Document 00800 (Supplementary Conditions).
22. Contract Documents and Contract: Contract Documents and Contract shall consist of the documents identified as the Contract Documents in Document 00520 (Agreement), plus all changes, Addenda, and Modifications thereto.
23. Contract Modification: Either:
    a. a written amendment to Contract signed by Contractor and Owner; or
    b. a Change Order; or
    c. a Construction Change Directive; or
    d. a written directive for a minor change in the Work issued by Owner.
24. Contract Sum: The sum stated in the Agreement and, including authorized adjustments, the total amount payable by Owner to Contractor for performance of the Work and the Contract Documents. The Contract Sum is also sometimes referred to as the Contract Price or the Contract Amount.
25. Contract Time: The number or numbers of Days or the dates stated in the Agreement:
    a. to achieve Substantial Completion of the Work or designated Milestones; and/or
    b. to complete the Work so that it is ready for final payment and is accepted.
26. Contractor: The person or entity identified as such in the Agreement and referred to throughout the Contract Documents as if singular in number and neutral in gender. The term "Contractor" means the Contractor or its authorized representative.
27. Contractor's Employees: Persons engaged in execution of Work under Contract as direct employees of Contractor, as Subcontractors, or as employees of Subcontractors.
28. Day: One calendar day of 24 hours measured from midnight to the next midnight, unless the word "day" is specifically modified to the contrary.

29. Defective: An adjective which, when modifying the word "Work," refers to Work that is unsatisfactory or unsuited for the use intended, faulty, or deficient, that does not conform to the Contract Documents, or does not meet the requirements of any inspection, reference standard, test or approval referred to in the Contract Documents (including but not limited to approval of Samples and "or equal" items), or has been damaged prior to final payment (unless responsibility for the protection thereof has been assumed by Owner). Owner is the judge of whether Work is Defective.
30. Drawings: The graphic and pictorial portions of Contract Documents, wherever located and whenever issued, showing the design, location and dimensions of the Work, generally including plans, elevations, sections, details, schedules, and diagrams.
31. Engineer: If used elsewhere in the Contract Documents, "Engineer" shall mean a person holding a valid California State Architect's or Engineer's license representing the Owner in the administration of the Contract Documents. Engineer may be an employee of or an independent consultant to Owner. When Engineer is referred to within the Contract Documents and no Engineer has in fact been designated, then the matter shall be referred to Owner. The term Engineer shall be construed to include employees of Engineer and/or employees that Engineer supervises. When the designated Engineer is an employee of Owner, his or her authorized representatives on the Project will be included under the term Engineer. If Engineer is an employee of Owner, Engineer is the beneficiary of all Contractor obligations to Owner, including without limitation, all releases and indemnities.
32. Equal: Equal in opinion of Owner. Burden of proof of equality is responsibility of Contractor.
33. Exposed: Work exposed to view in the finished Work, including behind louvers, grilles, registers and various other construction elements.
34. Final Acceptance or Final Completion: Owner's acceptance of the Work as satisfactorily completed in accordance with Contract Documents. Requirements for Final Acceptance/Final Completion include, but are not limited to:
    a. All systems having been tested and accepted as having met requirements of Contract Documents.
    b. All required instructions and training sessions having been given by Contractor.
    c. All Project Record Documents having been submitted by Contractor, reviewed by Owner, and accepted by Owner.
    d. All punch list Work, as directed by Owner, having been completed by Contractor.
    e. Generally all Work, except Contractor maintenance after Final Acceptance/Final Completion, having been completed to satisfaction of Owner.
35. Force Account: Work directed to be performed without prior agreement as to lump sum or unit price cost thereof, and which is to be billed at cost for labor, materials, equipment, taxes, and other costs, plus a specified percentage for overhead and profit.
36. Furnish: Supply only, do not install.
37. Indicated: Shown or noted on the Drawings.
38. Install: Install or apply only, do not furnish.
39. Latent: Not apparent by reasonable inspection, including but not limited to, the inspections and research required as a condition to bidding under Document 00700 (General Conditions).

40. Law: Unless otherwise limited, all applicable laws including without limitation all federal, state, and local laws, statutes, standards, rules, regulations, ordinances, and judicial and administrative decisions.
41. Material: This word shall be construed to embrace machinery, manufactured articles, materials of construction (fabricated or otherwise), and any other classes of material to be furnished in connection with Contract, except where a more limited meaning is indicated by context.
42. Milestone: A principal event specified in Contract Documents relating to an intermediate completion date or time prior to Substantial Completion of all Work.
43. Modification: Same as Contract Modification.
44. Not in Contract: Work that is outside the scope of Work to be performed by Contractor under Contract Documents.
45. Notice of Completion: Shall have the meaning provided in California Civil Code Section 3093, and any successor statute.
46. Off Site: Outside geographical location of the Project.
47. Owner: The Agency.
48. Owner-Furnished, Contractor-Installed: Items furnished by Owner at its cost for installation by Contractor at its cost under Contract Documents.
49. Owner's Representative(s): See Document 00520 (Agreement).
50. Partial Utilization: Use by Owner of a substantially completed part of the Work for the purpose for which it is intended (or a related purpose) prior to Substantial Completion of all of the Work.
51. PCBs: Polyclorinated byphenyls.
52. Phase: A specified portion of the Work (if any) specifically identified as a Phase in Document 00520 (Agreement) or Document 01100 (Summary).
53. Product Data: That information (brochures, catalog sheets, manufacturer's cut sheets, etc.) supplied by vendors having technical and commercial characteristics of the supplied equipment or materials and accompanying commercial terms such as warranties, instructions, and manuals.
54. Progress Report: A periodic report submitted by Contractor to Owner with progress payment invoices accompanying progress schedule. See Section 01320 (Progress Schedules and Reports) and Document 00700 (General Conditions).
55. Project: Total construction of which Work performed under Contract Documents may be whole or part.
56. Project Float: As defined in paragraph 1.2.B.3, Section 01320 (Progress Schedules and Reports).
57. Project Manual: Project Manual consists of Bidding Requirements, Agreement, Bonds, Certificates, Contract Conditions, Drawings, and Specifications.
58. Project Record Documents: All Project deliverables required under Sections 01700 et seq., including without limitation, as-built drawings; Project Record Specifications; Installation, Operation, and Maintenance Manuals; and Machine Inventory Sheets.
59. Provide: Furnish and install.
60. Request for Information ("RFI"): A document prepared by Contractor requesting information regarding the Project or Contract Documents as provided in Section 01250

(Modification Procedures). The RFI system is also a means for Owner to submit Contract Document clarifications or supplements to Contractor.

61. Request for Proposals ("RFP"): A document issued by Owner to Contractor whereby Owner may initiate changes in the Work or Contract Time as provided in Contract Documents. See Section 01250 (Modification Procedures).
62. Request for Substitution ("RFS"): A document prepared by Contractor requesting substitution of materials as permitted and to the extent permitted in Contract Documents. See Section 01600 (Product Requirements).
63. RFI-Reply: A document consisting of supplementary details, instructions, or information issued by Owner that clarifies or supplements Contract Documents, and with which Contractor shall comply. RFI-Replies do not constitute changes in Contract Sum or Contract Time except as otherwise agreed in writing by Owner. RFI-Replies will be issued through the RFI administrative system.
64. Samples: Physical examples of materials, equipment, or workmanship that are representative of some portion of the Work and which establish the standards by which such portion of the Work will be judged.
65. Sanitation Standards: The Sonoma County Water Agency Design and Construction Standards for Sanitation Facilities.
66. Shop Drawings: All drawings, diagrams, illustrations, schedules, and other data or information which are specifically prepared or assembled by or for Contractor and submitted by Contractor to illustrate some portion of the Work.
67. Shown: As indicated on Drawings.
68. Site: The particular geographical location of Work performed pursuant to Contract Documents.
69. Specifications: The written portion of the Contract Documents consisting of requirements for materials, equipment, construction systems, standards, and workmanship for the Work; performance of related services; and are contained in Divisions 1 through 16.
70. Specified: As written in Specifications.
71. Subcontractor: A person or entity that has a direct contract with Contractor to perform a portion of the Work at the Site. The term "Subcontractor" is referred to throughout the Contract Documents as if singular in number and neutral in gender and means a Subcontractor or an authorized representative of the Subcontractor. The term "Subcontractor" does not include a separate contractor or subcontractors of a separate contractor.
72. Substantial Completion: The Work (or a specified part thereof) has progressed to the point where, in the opinion of Owner as evidenced by a Certificate of Substantial Completion, the Work is sufficiently complete, in accordance with Contract Documents, so that the Work (or specified part) can be utilized for the purposes for which it is intended; or if no such certificate is issued, when the Work (or specified part) is complete and ready for final payment as evidenced by written recommendation of Owner for final payment. The terms "Substantially Complete" and "Substantially Completed" as applied to all or part of the Work refer to Substantial Completion thereof.
73. Superintendence: Executive oversight and charge of the main aspects of construction, including scheduling, sequence of subcontractor Work, and quality control.

74. Supplemental Instruction: A written directive from Owner to Contractor ordering alterations or Modifications that do not result in change in Contract Sum or Contract Time, and do not substantially change Drawings or Specifications. See Section 01250 (Modification Procedures).
75. Testing and special inspection agency: An independent entity engaged by Owner to inspect and/or test the workmanship, materials, or manner of construction of buildings or portions of buildings, to determine if such construction complies with the Contract Documents and applicable codes.
76. Underground Facilities: All pipelines, conduits, ducts, cables, wires, manholes, vaults, tanks, tunnels or other such facilities or attachments, and any encasements containing such facilities that have been installed underground to furnish any of the following services or materials: Electricity, gases, chemicals, steam, liquid petroleum products, telephone or other communications, cable television, sewage and drainage removal, traffic or other control systems, or water.
77. Unit Price Work: Shall be the portions of the Work for which a unit price is provided in Document 00520 (Agreement) or Section 01100 (Summary).
78. Work: The entire completed construction, or the various separately identifiable parts thereof, required to be furnished under the Contract Documents within the Contract Time. Work includes and is the result of performing or furnishing labor and furnishing and incorporating materials and equipment into the construction, and performing or furnishing services and furnishing documents, all as required by the Contract Documents including everything shown in the Drawings and set forth in the Specifications. Wherever the word “work” is used, rather than the word “Work,” it shall be understood to have its ordinary and customary meaning.

PART 2 PRODUCTS – NOT USED

PART 3 EXECUTION – NOT USED

END OF SECTION

SECTION 01450

QUALITY CONTROL

PART 1 GENERAL

1.1 SECTION INCLUDES

A. Contractor's Quality Control
B. Quality of the Work
C. Inspections and Tests by Governing Authorities
D. Inspections and Tests by Serving Utilities
E. Inspections and Tests by Manufacturer's Representatives
F. Tests and Inspections by Owner or Owner's Independent Testing and Inspection Agency
G. Additional Testing and Inspection

1.2 CONTRACTOR'S QUALITY CONTROL

A. Contractor's Quality Control: Ensure that products, services, workmanship, and Site conditions comply with requirements of Drawings and Specifications by coordinating, supervising, testing, and inspecting the Work and by utilizing only suitably qualified and appropriately audited, licensed, or trained personnel.
B. Quality Requirements: Work shall be accomplished in accordance with quality requirements of Drawings and Specifications, including, by reference, all codes, laws, rules, regulations, and standards. When no quality basis is prescribed, the quality and testing procedures shall be in accordance with the best-accepted practices of the construction industry for the locale of the Project, for projects of this type, or standards set by engineering or technical societies (e.g., ASTM or ASHRAE), whichever is more stringent.
C. Quality Control Personnel: Employ and assign knowledgeable and skilled personnel as necessary to perform quality control functions to ensure that the Work is provided as required.
D. At Contractor's expense, Contractor may employ a certified independent testing agency to perform compaction tests where there is disagreement. Owner may consider such tests, but will have the authority to make the final determination of relative compaction.
E. At Contractor's expense, Contractor may employ a certified independent welding inspection agency to perform welding inspections. Owner may consider such tests, but will have the authority to make the final determination of welding quality.

1.3 QUALITY OF THE WORK

A. Quality of Products: Unless otherwise indicated or specified, all products shall be new, free of defects, and fit for the intended use.
B. Quality of Installation: All Work shall be produced plumb, level, square and true, or true to indicated angle, and with proper alignment and relationship between the various elements, as indicated or required by Contract Documents.
C. Protection of Completed Work: Take all measures necessary to preserve completed Work free from damage, deterioration, soiling, and staining, until acceptance by Owner.
D. Standards and Code Compliance and Manufacturer's Instructions and Recommendations: Unless more stringent requirements are indicated or specified, comply with manufacturer's instructions and recommendations, reference standards and building code research report requirements in preparing, fabricating, erecting, installing, applying, connecting, and finishing Work.

E. Deviations from Standards and Code Compliance and Manufacturer's Instructions and Recommendations: Secure Owner's advance written consent. Document and explain all deviations from reference standards and building code research report requirements and manufacturer's product installation instructions and recommendations, including acknowledgement by the manufacturer that such deviations are acceptable and appropriate for the Project.
F. Verification of Quality: Work shall be subject to verification of quality by Owner in accordance with provisions of the Contract Documents.
   1. Cooperate by making Work available for inspection.
   2. Such verification may include mill, plant, shop, or field inspection as required.
   3. Provide access to all parts of the Work, including plants where materials or equipment are manufactured or fabricated.
   4. Provide all information and assistance as required, including that by and from subcontractors, fabricators, materials suppliers and manufacturers, for verification of quality by Owner.
   5. Applicable provisions of the Contract Documents shall govern Contract Modifications, if any, resulting from such verification activities.
G. Observations by Owner's Consultants: Periodic and occasional observations of Work in progress will be made by Owner and Owner's consultants as deemed necessary to review progress of Work and general conformance with design intent.
H. Limitations on Inspection, Test, and Observation: Neither employment of independent testing and inspection agency nor observations or tests by Owner and Owner's consultants shall in any manner relieve Contractor of obligation to perform Work in full conformance to all requirements of Contract Documents.
I. Owner's Acceptance and Rejection of Work: Owner reserves the right to reject all Work not in conformance with the requirements of the Drawings and Specifications, or otherwise Defective.
J. Correction of Defective Work: Defective Work shall be modified, replaced, repaired or redone by the Contractor at no change in Contract Sum or Contract Time.
K. Acceptance of Defective Work: Acceptance of Defective Work, without specific written acknowledgement and approval of Owner, shall not relieve the Contractor of the obligation to correct such Work.
L. Contract Adjustment for Defective Work: Should Owner determine that it is not feasible or in Owner's interest to require Defective Work to be repaired or replaced, an equitable reduction in Contract Sum shall be made by agreement between Owner and Contractor. If equitable amount cannot be agreed upon, a Construction Change Directive will be issued and the amount in dispute resolved in accordance with applicable provisions of Document 00700 (General Conditions).
M. Non-Responsibility for Defective Work: Owner and Owner's consultants disclaim any and all responsibility for Work produced not in conformance with the Drawings and Specifications.
N. Responsibility for Defective Work: Contractor shall have full responsibility for all consequences resulting from Defective Work, including without limitation all delays, disruptions, extra inspection and correction costs by Contractor and Owner and re-Work, and extra time and costs of all types. Contractor waives excuses for Defective Work relating to Owner's prior review of Submittals and/or prior failure to notice Defective Work in place on inspection.

1.4 INSPECTIONS AND TESTS BY GOVERNING AUTHORITIES

A. Regulatory Requirements for Testing and Inspection: Comply with UBC requirements and all other requirements of governing authorities having jurisdiction.
B. Inspections and Tests by Governing Authorities: Cause all tests and inspections required by governing authorities having jurisdiction to be made for Work under this Contract.
   1. Such authorities may include, but are not limited to PRMD, Fire Department, and similar agencies.
   2. Except as specifically noted, scheduling, conducting and paying for such inspections shall be solely the Contractor's responsibility.

1.5 INSPECTIONS AND TESTS BY SERVING UTILITIES

A. Inspections and Tests by Serving Utilities: Cause all tests and inspections required by serving utilities to be made for Work under this Contract. Scheduling, conducting, and paying for such inspections shall be solely the Contractor's responsibility.

1.6 INSPECTIONS AND TESTS BY MANUFACTURER'S REPRESENTATIVES

A. Inspections and Tests by Manufacturer's Representatives: Cause all tests and inspections specified to be conducted by materials or systems manufacturers to be made. Additionally, all tests and inspections required by materials or systems manufacturers as conditions of warranty or certification of Work shall be made, the cost of which shall be included in the Contract Sum.

1.7 TESTS AND INSPECTIONS BY OWNER OR OWNER'S INDEPENDENT TESTING AND INSPECTION AGENCY

A. Owner may conduct or Owner may select an independent testing and inspection agency or agencies to conduct tests and inspections as indicated on Drawings, in Specifications, and as required by governing authorities having jurisdiction.
B. Responsibility for payment for such tests and inspections shall be as indicated in paragraph 1.7D below. All time and costs for Contractor's service related to such tests and inspections shall be included in Contract Time and Contract Sum.
C. Contractor shall pay for all additional charges by testing and inspection agencies and governing authorities having jurisdiction due to the following:
   1. Contractor's failure to properly schedule or notify testing and inspection agency or authorities having jurisdiction.
   2. Changes in sources, lots, or suppliers of products after original tests or inspections.
   3. Changes in means, methods, techniques, sequences, and procedures of construction that necessitate additional testing, inspection, and related services.
   4. Changes in mix designs for concrete and mortar after review and acceptance of submitted mix design.
   5. Contractor-submitted requests to change materials or products, which are accepted, but require testing and/or reinspection beyond original design.
D. In addition to tests to be performed by Contractor (and to be paid by Contractor) as required elsewhere in Contract Documents, tests and special inspections that may be performed by Owner or Owner's independent testing and inspection agency or agencies and paid by Owner include, but are not limited to, the following:

SECTION	TESTS
02315	Relative compaction
02725	Relative compaction
"	Resistance (R-value)
02745	Relative compaction
03300	Concrete slump
"	Concrete compressive strength
"	Grout compressive strength
13120, 13125	High strength bolting
	Welding

E. Owner may perform tests at any time at its discretion.

F. California Test Method No. 216 (Relative Compaction of Untreated and Treated Soils and Aggregates) and 231 (Relative Compaction of Untreated/Treated Soils and Aggregates [Area Concept Utilizing Nuclear Gauges]) may be modified as follows:
   1. In lieu of the specified 10-pound hammer, a Test Lab Model No. F-590 Mechanical Compactor (or equal) with a 10-pound hammer will be used.
   2. In lieu of the specified split cylindrical mold, a non-split cylindrical mold of the same diameter and wall thickness will be used.
   3. Any of the provisions of Test Method No. 216 which conflict with the use of such equipment described in (1) and (2) are considered void to the extent they preclude the use of such equipment.
   4. In lieu of the specified test form, an Owner standard form will be used.
   5. Correction for oversize material may be obtained from a table based upon the given equations and the coefficient for +3/4-inch aggregate will be computed from the following formulae:

      $Y = 1.0$ for $P = 10$ to 20
      $Y = 1.0 - .002 (P - 20)$ for $P = 20$ to 50

      where:

      Y = coefficient for 3/4" aggregate
      P = percent retained on 3/4" screen

   6. In lieu of the sand cone method of determination of in-place density, the method described in Part 1 of California Test Method 231 will be used except that the mode of operation and the probe depth will be determined by Owner.
   7. In-place density and relative compaction will be determined on the basis of individual test sites in lieu of the area concept.

G. Test and Inspection Reports: After each inspection and test by an independent testing and inspection agency or agencies, one copy of report shall be promptly submitted to Owner, who will distribute copies to Contractor and any agency having jurisdiction (if required by Code).
   1. Reports shall clearly identify the following:
      a. Date issued.
      b. Project name and number.
      c. Identification of product and Specifications Section in which Work is specified.
      d. Name of inspector.
      e. Date and time of sampling or inspection.
      f. Location in Project where sampling or inspection was conducted.

g. Type of inspection or test.
h. Date of test.
i. Results of tests.
j. Comments concerning conformance with Contract Documents and other requirements.

2. Test reports shall indicate specified or required values and shall include statement whether test results indicate satisfactory performance of products.
3. Samples taken but not tested shall be reported.
4. Test reports shall confirm that methods used for sampling and testing conform to specified test procedures.
5. When requested, testing and inspection agency shall provide interpretations of test results.

H. Contractor Responsibilities for Inspections and Tests:
1. Unless specified otherwise, notify Owner and testing agency 72 hours in advance of expected time of each test and inspection, and for all other operations requiring inspection and testing services, by submitting Contractor's inspection request in writing (or, if Owner provides a specific form, on that form).
   a. When tests or inspections cannot be performed after such notice, due to Contractor's negligence, reimburse Owner for testing and inspection agency personnel and travel expenses incurred.
2. Deliver to laboratory or designated location, adequate samples of materials proposed to be used that require advance testing, together with proposed mix designs.
3. Cooperate with testing and inspection agency personnel, Owner, and Owner's consultants. Provide access to Work areas and off-Site fabrication and assembly locations, including during weekends and after normal Work hours.
4. Provide incidental labor and facilities to provide safe access to Work to be tested and inspected, to obtain and handle Samples at the Site or at source of products to be tested, and to store and cure test Samples.
5. Provide, at least 15 Days in advance of first test or inspection of each type, a schedule of tests or inspections indicating types of tests or inspections and their scheduled dates.

1.8 ADDITIONAL TESTING AND INSPECTION

A. If initial tests or inspections made by Owner or the testing and inspection agency reveal that materials do not comply with Contract Documents, or if Owner has reasonable doubt that materials do not comply with Contract Documents, additional tests and inspections shall be made as directed.
1. If additional tests and inspections establish that materials comply with Contract Documents, Owner shall pay all costs for such tests and inspections.
2. If additional tests and inspections establish that materials do not comply with Contract Documents, all costs of such tests and inspections shall be deducted from Contract Sum.
3. If Work requiring inspection is covered by follow-on or follow-up Work before it is inspected, uncover Work so proper inspections can be performed. All costs of such tests and inspections shall be deducted from Contract Sum.

PART 2 PRODUCTS – NOT USED

PART 3 EXECUTION – NOT USED

END OF SECTION

SECTION 01500

TEMPORARY FACILITIES AND CONTROLS

PART 1 GENERAL

1.1 SUMMARY

A. Section Includes:
1. Temporary Electricity
2. Temporary Telephone
3. Temporary Water
4. Temporary Sanitary Facilities
5. Temporary Barriers and Enclosures
6. Tree and Plant Protection
7. Water Control
8. Storm Water Pollution Prevention Plan
9. Removal of Temporary Facilities and Controls

1.2 DEFINITIONS

A. Dripline: The area on the ground from the trunk of any tree to the point directly below the outermost tips of the foliage of that tree.

1.3 TEMPORARY ELECTRICITY

A. Contractor may make arrangements with Owner to use the 120-VAC convenience power receptacles at existing service center building, if needed. If voltages other than 120-VAC (or higher loads than the existing circuits can provide) are required, make separate arrangements for such service with Pacific Gas and Electric Company.

1.4 TEMPORARY TELEPHONE

A. Provide, maintain, and pay for telephone service to field office at time of Project mobilization.

1.5 TEMPORARY WATER

A. Contractor may coordinate with Owner to use Owner-provided recycled water from the treatment plant for this Project. Contact Owner three Days prior to commencement of Work to coordinate using Owner's water. Owner will provide and install a backflow prevention device and water meter if Owner determines it to be necessary. Should Owner determine, in its sole discretion, that Contractor's use of Owner's water is excessive, Owner may terminate water delivery. Water used by Contractor shall not be permitted to enter the creek in any manner that would erode the topsoil or banks, or silt or roil the creek. No other Owner-provided water will be made available to Contractor for this Project.

1.6 TEMPORARY SANITARY FACILITIES

A. Provide and maintain required temporary buildings with sanitary toilets for use of all workers.
B. Comply with all minimum requirements of the Health Department or other public agency having jurisdiction; maintain in a sanitary condition at all times.

1.7 TEMPORARY BARRIERS AND ENCLOSURES

A. Provide barriers to prevent unauthorized entry to construction areas, to allow for Owner's use of Site, and to protect existing facilities and adjacent properties from damage from construction operations.
B. Provide barricades required by governing authorities to control public access to existing buildings.
C. Protect vehicular traffic, stored materials, Site, and structures from damage.

1.8 TREE AND PLANT PROTECTION

A. Root protection:
   1. No storage of materials or equipment will be allowed within the Dripline.
   2. Whenever possible, excavation shall be on a radial line, diverging from the tree trunk.
B. Exposure to harmful substances: No storage or dumping of any substances that may be harmful to trees shall occur at any location on the Site.
C. Where construction is to be performed in the vicinity of trees and shrubbery, the Work shall be carried on in a manner that will cause minimum damage. Owner will designate trees that are to be removed. Under no circumstances are additional trees to be removed without written permission from Owner. Trees and shrubbery that are not to be removed shall be protected from injury or damage resulting from Contractor's operations.
D. All damage shall be immediately reported to Owner, who will file a report so that penalties may be determined.
E. Temporary construction fence:
   1. 4 foot height
   2. Orange
   3. As indicated
F. Any tree that is removed without Owner's permission or is irreparably damaged, in the opinion of Owner, shall cost Contractor $27.00 per square inch of cross section, measured at 4 ½ feet above ground, but not less than $250.00, such cost to be deducted from monies due or to become due under the Contract. If tree protection is not performed or is not performed adequately, and Owner determines that a tree has been irreparably damaged, Owner will impose the same penalty as for unauthorized removal of a tree.

1.9 WATER CONTROL

A. See Section 02240 (Dewatering) for information on ground water control.
B. Grade Site to drain unless otherwise indicated or specified.
C. Maintain excavations free of water.
D. Protect Site from puddling or running water.
E. Provide water barriers as required to protect Site from soil erosion.

1.10 STORM WATER POLLUTION PREVENTION PLAN

A. Prior to commencement of Work at the Site, obtain Owner approval on a Storm Water Pollution Prevention Plan (SWPPP) prepared in accordance with:
   1. The Caltrans Storm Water Quality Handbooks:
      a. Storm Water Pollution Prevention Plan (SWPPP) and Water Pollution Control Program (WPCP) Preparation Manual; and
      b. Construction Site Best Management Practices (BMPs) Manual.
   2. State Water Resources Control Board (SWRCB), Order No. –2009-0009 – DWQ, National Pollutant Discharge Elimination System (NPDES), General Permit for Storm Water

Discharges Associated with Construction and Land Disturbance Activities (Construction General Permit). The permit is available at Owner's office or is available online at: http://www.swrcb.ca.gov/water_issues/programs/stormwater/constpermits.shtml. The requirements of this order replace and supersede State Water Board Orders No 99-08-DWQ and 2003-0007-DWQ.

B. Develop and implement a monitoring program in accordance with the requirements of the General Permit to verify compliance with the General Permit.
C. Submit SWPPP to Owner for review in accordance with Section 01330 (Submittal Procedures). Provide the SWPPP to Owner prior to commencement of Work at the Site.
D. The SWPPP shall include all of the requirements in paragraphs 1.14A, 1.14B, and 1.14C of this Section 01500. Particular attention shall be paid to:
   1. Site Map
   2. Locations of all equipment and materials storage
   3. Location and containment for fueling area, construction entrances, and concrete washouts
   4. Locations of all other staging areas, stockpile areas, and disposal sites.
   5. Location of sanitation facilities
   6. All erosion and sediment control BMPs, as well as non-storm water BMPs
   7. Dewatering plan
E. Water Pollution Control Drawings shall be of sufficient size and scale to detail BMP locations. Remove all extraneous information from the base sheets to improve clarity, including geometric equations, notes, details, and all data not related to water pollution control work. Use a copy of the appropriate Drawing(s) as a base sheet(s) with the pertinent stage of construction drawn in as an overlay to accurately reflect Site conditions at various phases of construction. Provide enlarged detail mapping as necessary to detail BMP locations.
F. Revise and update the SWPPP whenever there is a change in construction operations that may affect the Site drainage patterns or discharge of pollutants to surface waters, groundwaters, or a separate municipal storm sewer system.
G. Failure to fully comply with the requirements of the General Permit shall subject Contractor to all fines, damages, and job delays incurred due to failure to implement the SWPPP.
H. Keep a copy of the General Permit, together with updates and revisions at the Site. Furnish SWPPP to Owner upon Owner's request.

1.11 REMOVAL OF TEMPORARY FACILITIES AND CONTROLS

A. Remove temporary utilities, equipment, facilities, and materials prior to final inspection.
B. Clean and repair damage caused by installation or use of temporary Work.
C. Restore existing facilities used during construction to original condition. Restore permanent facilities used during construction to specified condition.

PART 2 PRODUCTS – NOT USED

PART 3 EXECUTION – NOT USED

END OF SECTION

SECTION 01540

SITE SECURITY AND SAFETY

PART 1 GENERAL

1.1 SUBMITTALS

A. Safety Program.
B. Fire Protection Plan.

1.2 PROTECTION

A. Continuously maintain protection as necessary to protect the Work, as a whole and in part, and adjacent property and improvements from accidents, injuries or damage.
B. Properly protect the Work:
   1. With lights, guard rails, temporary covers and barricades.
   2. Enclose excavations with proper barricades.
   3. Brace and secure all parts of the Work against storm and accident.
   4. Provide such additional forms of protection that may be necessary under existing circumstances.
C. Provide and maintain in good condition all protective measures required to adequately protect the public from hazards resulting from the Work and to exclude unauthorized persons from the Work. When regulated by Building Code, Cal OSHA, or other authority, such legal requirements for protection shall be considered as minimum requirements. Be responsible for the protection in excess of such minimum requirements as required.

1.3 CONTROL OF SITE

A. Ensure that no alcohol, firearms, weapons, or controlled substance enters or is used at the Site. Immediately remove from the Site and terminate the employment of any employee found in violation of this provision.

1.4 SAFETY PROGRAM

A. Prior to starting any Work at the Site, submit a Safety Program that has been reviewed and approved by an Industrial Hygienist certified by the American Board of Industrial Hygiene or by a Certified Safety Professional. The Safety Program shall include the name, certification number, and certification seal of the Industrial Hygienist or Certified Safety Professional. Comply with the Safety Program and all applicable federal, state, and local regulation codes, rules, law and ordinances.
B. Receipt and/or review of the Safety Program by Owner, Engineer or Owner's Representative shall not relieve Contractor of any responsibility for complying with all applicable safety regulations.
C. It is essential that Contractor and each Subcontractor implement an effective and vigorous Safety and Health Program to cover their respective portions of the Work. Subject to Contractor's overall responsibility for Project safety, it shall be understood that the full responsibility for providing a safe place to work with respect to their respective portions of the Work rests with each individual Contractor and Subcontractor.
D. Safety Program components:
   1. Injury and Illness Prevention Program (IIPP): Conforming to the General Industrial Safety Orders (CCR Title 8, Division 1, Chapter 4, Subchapter 7, Section 3203), and the California Labor Code (Section 6401.7).

2. Site-Specific Safety and Health Plan (SSHP): Describing health and safety procedures that shall be implemented during the Work in order to ensure safety of the public and those performing the Work. Follow the guidelines for a SSHP listed in CCR Title 8, Division 1, Chapter 4, Subchapter 7, Section 5192, Item (b)(4) f.
3. Confined Space Program:
   a. The Site contains permit- and non-permit-confined spaces. Owner will provide Contractor with any available information regarding existing permit space hazards, entry operations, and safety information relating to Work in the existing permit spaces as set forth in the General Industrial Safety Orders (CCR Title 8, Division 1, Chapter 4, Subchapter 7, Section 5157).
   b. Permit space entry is allowed only through compliance with a permit space program meeting the requirements of Section 5157 of the General Industrial Safety Orders. During entry operations, or at the conclusion of entry operations, verbally notify Owner of the permit space program followed and of any hazards confronted or created in permit spaces during entry operations.

E. The wearing of hard hats shall be mandatory at all times for personnel on Site. Supply sufficient hard hats to equip properly all employees and visitors.
F. Whenever an exposure exists, appropriate personal protective equipment (PPE) shall be used by all affected personnel. Supply PPE to all personnel under Contractor's direction.

1.5 SAFETY REQUIREMENTS

A. Standards: Maintain the Project in accordance with state and local safety and insurance standards.
B. Hazards Control:
   1. Store volatile wastes in covered metal containers and remove from premises daily.
   2. Prevent accumulation of wastes that create hazardous conditions.
   3. Provide adequate ventilation during use of volatile or noxious substances.
C. Conduct cleaning and disposal operations to comply with local ordinances and anti-pollution laws.
   1. Do not burn or bury rubbish or waste material on the Site.
   2. Do not dispose of volatile wastes such as mineral spirits, oil, or paint thinner in storm or sanitary drains.
   3. Do not dispose of wastes into streams or waterways.
D. Provide accident information on the forms provided by Contractor. This information shall be provided on the same Day as the occurrence of said incident.

1.6 SITE SAFETY OFFICER

A. Designate one of Contractor's staff as "Site Safety Officer" whose duties shall include the responsibility for enforcing the environmental protection provisions of the Contract Documents including safety and health, the requirements of the Occupational Safety and Health Act, and other applicable federal, state and local standards. Submit for review by Owner Contractor's intended traffic flow plan, security plan, program for temporary structures, housecleaning plan, demolition program, and environmental safety and health plan. After review by Owner, the implementation and enforcement of these plans shall become the responsibility of the Site Safety Officer. Any changes in the plans shall be requested by Contractor through the Site Safety Officer for written concurrence by Owner.
B. Owner's risk management representative(s) shall be allowed access to accident/injury and illness reports, inspection reports, scheduling and construction meetings, and safety meetings.

1.7 FIRE PROTECTION PLAN

A. Prior to starting any Work at the Site, submit a fire protection plan that has been reviewed and approved by the Rincon Valley Fire Protection District. It is recommended that the plan include, but not be limited to, a discussion of the following items:
   1. Equipment spark arresters
   2. Fire-extinguishing equipment on hand
   3. Method of operation in case of fire
   4. Notification to authorities of any fire
   5. Access available during performance of Work
   6. Educating workers of fire protection plan

PART 2 PRODUCTS - NOT USED

PART 3 EXECUTION - NOT USED

END OF SECTION

SECTION 01600

PRODUCT REQUIREMENTS

PART 1 GENERAL

1.1 SECTION INCLUDES

A. Products
B. Product Options and Substitutions
C. Product Delivery Requirements
D. Product Storage and Handling

1.2 PRODUCTS

A. Products: New material, machinery, components, equipment, fixtures, and systems forming the Work. Does not include machinery and equipment used for preparation, fabrication, conveying, and erection of the Work. Products may also include existing materials or components required for reuse.
B. Do not use materials and equipment removed from existing premises, except as specifically permitted by the Contract Documents.
C. For similar components, provide interchangeable components of the same manufacturer.

1.3 PRODUCT OPTIONS AND SUBSTITUTIONS

A. Summary:
   1. This paragraph 1.3 describes procedures for selecting products and requesting substitutions of unlisted materials in lieu of materials named in the Specifications or approved for use in Addenda that were not already the subject of a Document 00660 (Substitution Request Form) submittal as provided in Document 00200 (Instructions to Bidders).
B. For products specified by naming one manufacturer only, Owner believes that the manufacturer listed is capable of producing equipment or products that will satisfy the requirements of the associated Specification. This statement, however, shall not be construed as an endorsement of a particular manufacturer's product, nor shall it be construed that a named manufacturer's standard product will comply with the requirements of the associated Specification. In such cases, the Owner is not aware of an equal manufacturer.
C. Contractor's Options:
   1. For products specified only by reference standard: Select any product meeting that standard.
   2. For products specified by naming one or more products or manufacturers:
      a. Select products of any named manufacturer meeting Specifications.
      b. If product becomes unavailable due to no fault of Contractor or if the product specified no longer complies with local regulations or laws, submit Request for Substitution (RFS), including all information contained in this Section 01600 and a fully executed Document 00660 (Substitution Request Form), but using the term "Contractor" each place the term "Bidder" appears in that form.
D. Substitutions:
   1. Except as provided in Document 00200 (Instructions to Bidders) with respect to "or Approved Equal" items, Owner will consider Contractor's substitution requests only when product becomes unavailable due to no fault of Contractor or if the product

specified no longer complies with local regulations or laws. Requests for review of proposed substitute items will not be accepted from anyone other than Contractor. The RFS shall state the extent, if any, to which the evaluation and acceptance of the proposed substitute will prejudice Contractor's achievement of Substantial Completion on time, and whether or not acceptance of the substitute for use in the Work will require a change in any of the Contract Documents (or in the provisions of any other direct contract with Owner for work on the Project).

2. Submit separate RFS for each product and support each request with:
   a. Product identification.
   b. Manufacturer's literature.
   c. Samples, as applicable.
   d. Name and address of similar projects on which product has been used, and dates of installation.
   e. Name, address, and telephone number of manufacturer's representative or sales engineer.
   f. For construction methods: Detailed description of proposed method; drawings illustrating methods.
3. Where required, itemize a comparison of the proposed substitution with product specified and list significant variations including, but not limited to dimensions, weights, service requirements, and functional differences. If variation from product specified is not pointed out in submittal, variation will be rejected even though submittal was favorably reviewed. Identify all variations of the proposed substitute from that specified in the RFS and indicate available maintenance, repair, and replacement service.
4. State whether the substitute will require a change in any of the Contract Documents (or provisions of any other direct contract with Owner for work on the Project) to adapt the design of the proposed substitute, and whether or not incorporation or use of the substitute in connection with Work is subject to payment of any license fee or royalty. Submit data relating to changes in construction schedule.
5. Include accurate cost data comparing proposed substitution with product and amount of net change in Contract Sum including, but not limited to, an itemized estimate of all costs or credits that will result directly or indirectly from acceptance of such substitute, including costs of redesign and claims of other contractors affected by the resulting change, all of which will be considered by Owner in evaluating the proposed substitute. Owner may require Contractor to furnish additional data about the proposed substitute.
6. Owner will not consider substitutions for acceptance (or, in Owner's sole discretion, Owner may make Contractor solely responsible for all resulting costs, expenses and other consequences) when a substitution:
   a. Results in delay meeting construction Milestones or completion dates.
   b. Is indicated or implied on submittals without formal request from Contractor.
   c. Is requested directly by Subcontractor or supplier.
   d. Acceptance will require substantial revision of Contract Documents.
   e. Disrupts Contractor's job rhythm or ability to perform efficiently.
7. Substitute products shall not be ordered without written acceptance of Owner.
8. Owner will determine acceptability of proposed substitutions and reserve right to reject proposals due to insufficient information.
9. Accepted substitutions will be evidenced by a Change Order or a CCD. All Contract Document requirements apply to Work involving substitutions.

E. Contractor's Representation and Warranty:
   1. Contractor's RFS constitutes a representation and warranty that Contractor:
      a. Has investigated proposed product and determined that it meets or exceeds, in all respects, specified product.
      b. Will provide the same warranty for substitution as for specified product.
      c. Will coordinate installation and make other changes that may be required for Work to be complete in all respects.
      d. Waives claims for additional costs which may subsequently become apparent.
      e. Will compensate Owner for additional redesign costs associated with substitution.
      f. Will be responsible for Construction Schedule slippage due to substitution.
      g. Will be responsible for Construction Schedule delay due to late ordering of available specified products caused by requests for substitution that are subsequently rejected by Owner.
      h. Will compensate Owner for all costs; including extra costs of performing Work under Contract Documents, extra cost to other contractors, and any claims brought against Owner, caused by late requests for substitutions or late ordering of products.
F. Owner's Duties:
   1. Review Contractor's RFS with reasonable promptness.
   2. Notify Contractor in writing of decision to accept or reject requested substitution.
G. Administrative Requirements:
   1. Specified products, materials, or systems for Project may include engineering or on-file standards required by the regulatory agency. Contractor's substitution of products, materials or systems may require additional engineering, testing, reviews, approvals, assurances, or other information for compliance with regulatory agency requirements or both. Provide all agency approvals or other additional information required and pay additional costs for required Owner services made necessary by the substitution at no increase in Contract Sum or Contract Time, and as a part of substitution proposal.

1.4 PRODUCT DELIVERY REQUIREMENTS

A. Deliver products in accordance with manufacturer's instructions.
B. Promptly inspect shipments to assure that products comply with requirements, quantities are correct, and products are undamaged.

1.5 PRODUCT STORAGE AND HANDLING

A. Store products only in staging area per provisions of Section 01100 (Summary).
B. Handle, store, and protect products in accordance with manufacturer's instructions, with seals and labels intact and legible. Store sensitive products in weather-tight, climate-controlled enclosures.
C. For exterior storage of fabricated products, place on appropriate supports, above ground.
D. Cover products subject to deterioration with impervious sheet covering. Provide ventilation to avoid condensation.
E. Store loose granular materials on solid flat surfaces in a well-drained area.
F. Provide equipment and personnel to store products by methods to prevent soiling, disfigurement, or damage.
G. Arrange storage of products to permit access for inspection. Periodically inspect to assure products are undamaged and are maintained under specified conditions.

PART 2 PRODUCTS - NOT USED

PART 3 EXECUTION - NOT USED

END OF SECTION

SECTION 01735

SELECTIVE DEMOLITION, CUTTING, AND PATCHING

PART 1 GENERAL

1.1 SUMMARY

A. Section Includes:
   1. Demolish and remove existing tenant improvements and adjacent accessories as indicated.
B. Related Sections:
   1. Section 03300 (Cast-In-Place Concrete)

1.2 SUBMITTALS

A. Product Data:
   1. Nonshrink grout
   2. Epoxy bonding adhesive
B. Work Plan:
   1. Demolition procedures and operational sequence
   2. Proposed materials and methods to be used for matching and repairing existing construction

1.3 SITE CONDITIONS

A. Perform preliminary Site investigations as required to ascertain extent of Work and review Drawings for extent of demolition prior to start of demolition Work.

PART 2 PRODUCTS

2.1 MANUFACTURERS

A. Nonshrink grout:
   1. Supreme Grout by Gifford Hill
   2. Masterflow 713 by Master Builders
   3. Sika Grout 212 by Sika
   4. Or Approved Equal
B. Epoxy bonding adhesive:
   1. Euco No.452 MV by Euclid Chemical Co.
   2. Sikadur 32, Hi-Mod by Sika Corporation
   3. Or Approved Equal

2.2 MATERIALS

A. Nonshrink Grout:
   1. Nonmetallic, noncorrosive and non-staining
   2. Premixed with only water to be added in accordance with manufacturer's instructions at Site
   3. Grout to produce a positive but controlled expansion; mass expansion shall not be created by gas liberation or by other means
   4. Minimum compressive strength at 28 days to be 6500 psi
   5. Coat exposed edges of grout with a cure/seal compound recommended by grout manufacturer

B. Epoxy Bonding Adhesive:
   1. Two component, moisture insensitive adhesive manufactured for the purpose of bonding fresh concrete to hardened concrete

PART 3 EXECUTION

3.1 PREPARATION

A. Provide substantial barricades and safety lights as required.
B. Provide temporary weather protection as necessary.

3.2 DEMOLITION

A. Cutting and Removal:
   1. Remove existing tenant improvements as indicated or as necessary for installation of new Work
   2. Neatly cut and remove materials, and prepare all openings to receive new Work
   3. Disconnect and remove electrical conduit, wiring, junction boxes, etc. as indicated
B. Modification of Existing Concrete:
   1. Where indicated, remove existing concrete and finish remaining surfaces as specified in Section 03300 (Cast-In-Place Concrete).
      a. Protect remaining concrete from damage
      b. Make openings by sawing through the existing concrete
      c. Concrete may be broken out after initial saw cuts in the event concrete thickness prevents cutting through
      d. Where sawing is not possible, make openings by drilling holes around perimeter of opening and then chipping out the concrete
      e. Holes shall be sufficient in number to prevent damage to remaining concrete
   2. Oversize required openings in existing concrete 1 IN on all sides and build back to required opening size by means of nonshrink grout epoxy bonded to the existing concrete.
   3. Where oversized openings cannot be made, remove the concrete to the required opening size and cut back exposed reinforcing 1 inch from face of concrete and fill resulting holes with nonshrink grout.
C. Removal of Existing Anchor Bolts or Other Protruding Elements:
   1. Removal within a distance of 8 feet above finished floor or operating level elevation
   2. Removed to a depth of ½ inch from finished surface
   3. Fill void with non-shrink grout
D. Matching and Patching:
   1. Walls, ceilings, floors or partitions:
      a. Repair abutting walls, ceilings, floors or partitions disturbed by removal
      b. Match and patch existing construction disturbed during installation of new Work
   2. Methods and materials:
      a. Similar in appearance, and equal in quality to adjacent areas for areas or surfaces being repaired
E. Salvaged Items:
   1. Thoroughly dry and clean all metal surfaces
   2. Dispose of items or materials not designated for Owner's salvage or reuse. Promptly remove from Site
   3. Do not store or sell Contractor-salvaged items or materials on Site

F. Clean Up:
   1. Transport debris and legally dispose of off Site

END OF SECTION

SECTION 01737

OPENINGS AND PENETRATIONS IN CONSTRUCTION

PART 1 GENERAL

1.1 RELATED SECTIONS

A. Section 07900 (Sealants)
B. Section 09900 (Paints and Coatings)

1.2 REFERENCES

A. ACI 318	Building Code Requirements for Structural Concrete
B. ASTM A36	Standard Specification for Carbon Structural Steel
C. ASTM A53	Standard Specification for Pipe, Steel, Black and Hot-Dipped, Zinc-Coated Welded and Seamless
D. NFPA 70	NEC
E. NFPA90A	Standard for Installation of Air Conditioning and Ventilating Systems

1.3 DEFINITIONS

A. Hazardous Areas: Areas shown in the Contract Documents as having Class I or Class II area classifications.
B. Washdown Areas: Areas having floor drains or hose bibs.

1.4 SUBMITTALS

A. Shop Drawings:
   1. For each structure provide dimensioned or scaled (minimum 1/8 inch = 1 foot) plan view drawings containing the following information:
      a. Vertical and horizontal location of all required openings and penetrations
      b. Size of all openings and penetrations
      c. Opening type
      d. Seal type
B. Quality Assurance/Control Submittals:
   1. Manufacturer's Instructions:
      a. Installation of standard manufactured products

1.5 QUALITY ASSURANCE

A. Obtain prior approval from Owner when any opening larger than 100 square inches must be made in existing or newly completed construction.

PART 2 PRODUCTS

2.1 MATERIALS

A. Pipe Sleeves: Steel, ASTM A53, Schedule 40, black.
B. Pipe Sleeves Penetrating into Corrosive Areas: Stainless steel.
C. Backing Rod and Sealant: See Section 07900 (Sealants).
D. Modular Mechanical Seals:
   1. Acceptable Manufacturers:
      a. Link-Seal

b. Calpico, Inc.
c. Or Approved Equal
2. 316 stainless steel bolts, nuts, and washers.

E. Sheet Metal Sleeves: Steel, ASTM A36, 12 GA.
F. Commercial Wall Castings:
1. For Unclassified Areas both sides of penetration:
a. Ductile Iron, class equal to connecting piping system.
2. For Wet/Corrosive Areas either side of penetration:
a. Stainless Steel, 304L.

PART 3 EXECUTION

3.1 INSTALLATION AND APPLICATION

A. Perform HVAC penetrations in accordance with NFPA 90A.
B. Perform electrical penetrations in accordance with NFPA 70, Article 501.
C. Install sleeves and castings in accordance with ACI 318, Chapter #6.
D. Hot dip galvanize or paint in accordance with Section 09900 (Paints and Coatings) all steel sleeves installed.
E. When mechanical or electrical Work cannot be installed as structure is being erected, provide and arrange for building-in of boxes, sleeves, insets, fixtures or devices necessary to permit installation later. Lay out chases, holes or other openings that must be provided in masonry, concrete or other Work.
F. Where pipes, conduits or ducts pass through floors in washdown areas, install sleeves with top 3 inches above finish floors. In non-washdown areas, install sleeves with ends flush with finished surfaces.
G. Size sleeves, blockouts and cutouts that will receive sealant seal such that free area to receive sealant is minimized and seal integrity may be obtained.
H. For insulated piping and ducts, size sleeves, blockouts and cutouts large enough to accommodate full thickness of insulation.
I. Do not cut into or core drill any beams, joists, or columns.
J. Do not install sleeves in beams, joists, or columns.
K. Do not install recesses in beams, joists, columns, or slabs.
L. Field Cutting and Coring:
1. Saw or core drill with non-impact type equipment.
2. Mark opening and drill small 3/4 inch or less holes through structure following opening outline.
3. Sawcut opening outline on both surfaces. Knock out within sawcuts using impact type equipment. Do not chip or spall face of surface to remain intact. Do not allow any overcut with saw kerf.
M. Precast-Pre-stressed Concrete Construction:
1. Do not cut openings nor core drill vertically or horizontally through stems of members.
2. Do not locate or install sleeves or recess sleeves vertically or horizontally through or in stems of members.
3. Cast openings and sleeves into flanges of units.
4. Cast openings larger than 6 inch in diameter or 6 inch maximum dimension in units at time of manufacture.
5. Cast openings smaller than 6 inch in diameter or 6 inch maximum dimensions in flanges of units at time of manufacture or field cut.

N. Where alterations are necessary or where new Work joins existing, restore adjacent surfaces to their condition existing prior to start of Work.
O. Provide waterstop plate/anchor flange for piping, ducts, castings and sleeves cast-in-place in concrete.
   1. For fabricated units, weld plate to sleeve, pipe, or ductwork.
   2. For commercial castings, cast water stop/anchor with wall pipe.
   3. Plate is to be same thickness as sleeve, pipe, casting or ductwork.
   4. For fabricated units, diameter of plate or flange to be 4 inch larger than outside diameter of sleeve, pipe or ductwork.
   5. For commercial castings, waterstop/anchor size to be manufacturer standard.
   6. Provide continuous around entire circumference of sleeve, pipe, or ductwork.
P. Where area is blocked out to receive sheet metal sleeve at later date:
   1. If blockout size is sufficient to allow placement, utilize dowels for interface of initially placed concrete and sleeve encasement concrete that is placed later.
      a. Size blockout based on sleeve size required plus 4 to 6 inches each side of sleeve for concrete encasement.
      b. Provide #4 dowels at 12-inch spacing along each side of blockout with minimum of two dowels required per side.
   2. If blockout size is not sufficient to allow placement of dowels, provide keyway along all sides of blockout.
      a. Size blockout based on sleeve size required plus 2 to 4 inches each side of sleeve for concrete encasement.
Q. For interior wall applications where backer rod and sealant are specified, provide backer rod and sealant at each side of wall.
R. Use full depth expanding foam sealant for seal applications into hazardous areas and applications where multiple pipes, conduits, etc. pass through single sleeve. Use full depth compressible sealant for applications involving single components passing through sleeves and for penetrations into non-hazardous area.
S. Do not make duct or conduit penetrations below high water levels when entering or leaving tankage, wet wells, or other water holding structures.
T. Modular Mechanical Seals:
   1. Utilize one seal for concrete thickness less than 8 inches and two seals for concrete 8 inch thick or greater.
   2. Utilize two seals for piping 16 inches in diameter and larger if concrete thickness permits.
   3. Install seals such that bolt heads are located on the most accessible side of the penetration.
U. Backer Rod and Sealant:
   1. Install in accordance with Section 07900 (Sealants).
   2. Provide backer rod and sealant for modular mechanical seal applications. Apply on topside of slab penetrations and on interior, dry sidewall penetrations.

3.2 SCHEDULES

A. General Schedule of Penetrations through Floors, Roofs, Foundation Base Slabs, Foundation Walls, Foundation Footings, Partitions and Walls for Ductwork, Piping, and Conduit:
   1. Provide the following opening and penetration types:
      a. Type A - Block out 2 inches larger than outside dimensions of duct, pipe, or conduits.

   b. Type B - Saw cut or line-drill opening. Place new concrete with integrally cast sheet metal or pipe sleeve.
   c. Type C - Fabricated sheet metal sleeve or pipe sleeve cast-in-place. Provide pipe sleeve with water ring for wet and/or washdown areas.
   d. Type D - Commercial type casting or fabrication.
   e. Type E - Saw cut or line-drill opening. Place new concrete with integrally cast pipe, duct or conduit spools.
   f. Type F - Integrally cast pipe, duct, or conduit.
   g. Type G - Saw cut or line-drill and remove area 1 inch larger than outside dimensions of duct, pipe or conduit.
   h. Type H - Core drill.
   i. Type I - Block out area. At later date, place new concrete with integrally cast sheet metal or pipe sleeve.
2. Provide seals of material and method described as follows.
   a. Category 1 - Modular Mechanical Seal.
   b. Category 2 - Roof curb and flashing according to SMACNA specifications unless otherwise indicated.
   c. Category 3 - 12 GA sheet metal drip sleeve set in bed of silicon sealant with backing rod and sealant used in sleeve annulus.
   d. Category 4 - Backer rod and sealant.
   e. Category 5 - Full depth compressible sealant with escutcheons on both sides of opening.
   f. Category 6 - Full depth compressible sealant and flanges on both sides of opening. Flanges constructed of same material as duct, fastened to duct and minimum 1/2 inch larger than opening.
   g. Category 7 - Full depth compressible sealant and finish sealant or full depth expanding foam sealant depending on application.
3. Furnish openings and sealing materials through new floors, roofs, partitions and walls in accordance with Schedule A, Openings and Penetrations for New Construction.
4. Furnish openings and sealing materials through existing floors, roofs, partitions and walls in accordance with Schedule B, Openings and Penetrations for Existing Construction.

SCHEDULE A. OPENINGS AND PENETRATIONS FOR NEW CONSTRUCTION

	DUCTS		PIPING		CONDUIT	
APPLICATIONS	OPENING TYPE	SEAL CATEGORY	OPENING TYPE	SEAL CATEGORY	OPENING TYPE	SEAL CATEGORY
Through floors with bottom side a hazardous area	C F I	7 Not Required 7	D F I(1)	Not Required Not Required 7	C F	7 Not Required
Through floors on grade above water table	C F I	4 Not Required 4	C F I(1)	7 Not Required 7	C F I(1)	4 Not Required 7
Through slab on grade below water table	F	Not Required	F	Not Required	F	Not Required
Through floors in washdown areas	C I	4 4	C H(2) I(1)	4 3 4	F H(2) I(1)	Not Required 3 7
Through walls where one side is a hazardous area	C F I	7 Not Required 7	D F I(1)	Not Required Not Required 7	C F	7 Not Required
Through exterior wall below grade above water table	C F I	7 Not Required 7	C D F I(1)	1 Not Required Not Required 1	F I(1)	Not Required 7
Through wall from tankage or wet well (above high water level) to dry well or dry area	C F I	7 Not Required 7	C D F H(2)	1 Not Required Not Required 1	C F H(2) I(1)	7 Not Required 7 7
Through wall from tankage or wet well (below high water level) to dry well or dry area	F	Not Required	F	Not Required	F	Not Required
Through exterior wall above grade	A B C	6 6 6	A B D H(2)	5 5 Not Required 5	C H(2)	5 4
Roof penetrations	A	2	A	2	A	2
Through interior walls and slabs not covered by the above applications	A C	4 4	A C	4 4	A C F	4 4 Not Required

(1) Multiple piping 3 inches and smaller or multiple conduits.
(2) Single pipe 3 inches and smaller or single conduit.

SCHEDULE B. OPENINGS AND PENETRATIONS FOR EXISTING CONSTRUCTION

	DUCTS		PIPING		CONDUIT	
APPLICATIONS	OPENING TYPE	SEAL CATEGORY	OPENING TYPE	SEAL CATEGORY	OPENING TYPE	SEAL CATEGORY
Through floors with bottom side a hazardous areas	B E	7 Not Required	B(1) E(3) H(2)	7 Not Required y	B(1) E(3) H(2)	7 Not Required 7
Through floors on grade above water table	B	7	B	7	B	7
Through slab on grade below water table	E	Not Required	E	Not Required	E	Not Required
Through floors in washdown areas	G	3	G H(2)	3 3	G H(2)	3 3
Through walls where one side is in hazardous area	B E	7 Not Required	B(1) B(3) E H(2)	7 1 Not Required 7	B(1)(3) E H(2)	7 Not Required 7
Through exterior wall below grade above water table	B	7	B(1) B(3) H(2)	7 1 7	B(1)(3) H(2)	7 7
Through wall from tankage or wet well (above high water level) to dry well or dry area	B E	7 Not Required	B E H(2)	1 Not Required 1	B(1)(3) E H(2)	7 Not Required 7
Through wall from tankage or wet well (below high water level) to dry well or dry area	E	Not Required	E	Not Required	E	Not Required
Through exterior wall above grade	G	6	G(1)(3) H(2)	5 5	G(1)(3) H(2)	5 7
Roof penetrations	G	2	G(1)(3) H(2)	2	G	2
Through interior walls and slabs not covered by the above applications.	G	4	G(1)(3) H(2)	4 4	G(1)(3) H(2)	4 4

(1) Multiple piping 3 inches and smaller or multiple conduits.
(2) Single pipe 3 inches and smaller or single conduit.
(3) Single pipe or conduit larger than 3 inches.

END OF SECTION

SECTION 01740

CLEANING

PART 1 GENERAL

1.1 SUMMARY

A. Section Includes:
   1. Progress Cleaning
   2. Final Cleaning
B. Related Sections:
   1. Section 01500 (Temporary Facilities and Controls)

1.2 PROGRESS CLEANING

A. Perform periodic cleaning to ensure that any streets and other Owner and public properties are maintained free from accumulation of waste materials, dust, mud, and debris.
B. Where required, wet down surfaces to lay dust and prevent the blowing of dust to nearby residences or public properties.
C. Keep all paved roads clean and free of dust, mud, and debris resulting from Contractor's operations. Daily cleanup throughout the job will be necessary as Contractor progresses with its Work, but extra attention to cleanup shall be made prior to weekends and holidays. Without limiting the foregoing, remove trench spoil along traveled ways daily; grade and vacuum broom surfaces initially where applicable and later water flush with high-pressure sprays, being careful to avoid downstream contamination.
D. All dust, mud, spoils, and construction debris shall be removed daily from all roadways, ditches, shoulders, and private property (fills or spoils placed on private property at private property owner's written request excepted).
E. Disposal of Materials:
   1. All waste materials, debris, and rubbish shall be disposed of at sites to be chosen by Contractor in accordance with applicable local, state, and federal regulations.
   2. Contractor is cautioned that the County of Sonoma and cities within the county have regulations governing the disposal of rubble, broken pavement, and similar materials.
   3. Become familiar with the requirements of the agency having jurisdiction over any contemplated disposal site and comply with all such requirements.
F. All excess soil from performance of Work shall be disposed at sites to be chosen by Contractor in accordance with applicable local, state, and federal regulations, and, if applicable, in accordance with Contractor's soil disposal plan. If Contractor elects to dispose of soil on any private property, prior to any such disposal, a letter allowing such disposal shall be obtained from the property owner and presented to Owner. The letter shall state that the property owner has complied with all necessary local, state, and federal laws with respect to disposal on property owner's property. Contractor is advised that the property owner is required to obtain a fill permit from PRMD. Regardless of the location of the disposal area, Contractor shall specify the location in the Storm Water Pollution Prevention Plan (SWPPP) if required under Section 01500 (Temporary Facilities and Controls). Any requirements in the SWPPP that pertain to the area of Work shall also apply to the disposal area. In addition, placement of fill in wetland areas is subject to permit procedures of the US Army Corps of Engineers. At the completion of Work, a letter from

each affected property owner will be required releasing Contractor, Owner, and any Owner consultant from future liability.

G. If Contractor does not properly clean the Site, in the opinion of Owner, then Owner shall have the option of using outside equipment to perform the cleanup and such cost will be withheld from the Contract Sum.

1.3 FINAL CLEANING

A. Execute final cleaning prior to final inspection, using only properly skilled workers.
B. Remove grease, dust, dirt, stains, labels, fingerprints, and other foreign materials from exposed interior and exterior finished surfaces.
C. Repair, patch, and touch up marred surfaces to match adjacent finishes.
D. Clean interior and exterior surfaces exposed to view: remove temporary labels, stains and foreign substances, polish transparent and glossy surfaces, vacuum carpeted and soft surfaces.
E. Clean equipment and fixtures to a sanitary condition, clean or replace filters of mechanical equipment operated during construction, clean ducts, blowers and coils of units operated without filters during construction.
F. Clean Site.
G. Mechanically sweep paved areas.
H. Remove waste and surplus materials, rubbish, and construction facilities from Site.

PART 2 PRODUCTS – NOT USED

PART 3 EXECUTION – NOT USED

END OF SECTION

SECTION 01741

CONSTRUCTION MATERIAL WASTE MANAGEMENT PLAN

PART 1 GENERAL

1.1 CONSTRUCTION MATERIAL WASTE MANAGEMENT PLAN

A. Submit Construction Material Waste Management Plan that includes, but is not limited to:
   1. Management monitoring program that includes, at a minimum, multiple recyclables containers.
   2. Current recycling program used by each material supplier for materials listed in Divisions 1-16.
   3. Estimate of on-Site material reuse (native fill) in tons.
   4. Completed Self-Certification of Compliance for Contractor and each listed Subcontractor. Self-Certification of Compliance form is included at the end of this Section 01741.

B. Submit monthly progress reports updated with waste management log that includes which material containers have been removed, how many have been removed, and the weight of those containers.

PART 2 PRODUCTS - NOT USED

PART 3 EXECUTION - NOT USED

END OF SECTION

SELF-CERTIFICATION OF COMPLANCE WITH CONTRUCTION MATERIAL WASTE PLAN

Firm Name: _____ Phone: _____

Address: _____

Principal Service or Product: _____

☐ Prime Contractor ☐ Supplier of Material/Service

☐ Subcontractor ☐ Broker

☐ Sole Ownership ☐ Corporation

☐ Partnership ☐ Joint Venture

I, Contractor/Subcontractor, hereby certify that I have read and understood, and agree to adopt and implement, the approved Construction Waste Management Plan for the Service Center Relocation (2025 Aviation Boulevard).

Certified by:

Name:_____ Title:_____

Signature:_____ Date:_____

SECTION 01750

STARTING AND ADJUSTING

PART 1 GENERAL - NOT USED

PART 2 PRODUCTS - NOT USED

PART 3 EXECUTION

3.1 CHECKOUT PROCEDURES

A. Upon completion of installation, conduct an initial visual inspection and checkout of all mechanical and electrical equipment and devices.
   1. Clean the interior of piping, raceways, and boxes, cabinets, electrical panels, switchboard and other equipment and make free of foreign material
   2. Fill and check connections of liquid filled transformer
   3. Check all disconnect switches for proper operation
   4. Check terminations and labels for all new/revised electrical wiring and compare with Record Drawings (correct labels accordingly at Site and in Record Drawings)
   5. Check terminations and labels for all new/revised voice and data wiring and create a Record Drawing

B. Conduct field tests including visual and mechanical inspection of the following for proper connection and operation of equipment:
   1. Proper grounding
   2. To the extent practicable, turn rotating equipment, operate valves, roll up door operators, Shop equipment and operate other equipment to check for binding, and interference
   3. Check electric motor-driven equipment for correct rotation
   4. Check incoming electric power for voltage amplitude and voltage balance
   5. Check electric motor driven equipment for correct rotation
   6. Check for blockage of ventilating passageways
   7. Check all safety guards to insure they are in place
   8. Listen for mechanical and electrical noise in excess of specified levels
   9. Check for proper installation of vibration isolators of meters and instruments
   10. Check lighting control operation and programming
   11. Perform and fill-out pre-commissioning checklist for the heat pump control operation and programming per Sections 15475 (Water Source Heat Pumps) and 15940 (Mechanical Control Sequence)
   12. Check ventilation control operation and programming per Sections 15838 (Power Ventilators) and 15940 (Mechanical Control Sequence)
   13. Check recycled water system programming per Section 13441 (Recycled Water System Control Loop System)
   14. Verify level, temperature, and pressure transmitters are calibrated and reading correctly
   15. Verify flow meters are calibrated and reading correctly
   16. Check Access Control wiring terminations per Section 10450 (Access Control System)
   17. Check Fire Alarm Panel wiring
   18. Test each voice and data circuit per Section 16751 (Telecommunications Acceptance Testing)

19. Check operation of valves.
20. Check operation of motor operated valve.
21. Verify programming and controls of PLC and HMI.

END OF SECTION

SECTION 01770

CONTRACT CLOSEOUT

PART 1 GENERAL

1.1 SUMMARY

A. Section Includes:
   1. Description of Contract closeout procedures including:
      a. Removal of Temporary Construction Facilities
      b. Substantial Completion
      c. Final Completion
      d. Project Record Documents
      e. Project Guarantee
      f. Warranties
      g. Turn-In
      h. Computer Programs
      i. Release of Claims
      j. Fire Inspection Coordination
      k. Building Inspection Coordination

1.2 REMOVAL OF TEMPORARY CONSTRUCTION FACILITIES

A. Remove temporary materials, equipment, services, and construction prior to Substantial Completion inspection.
B. Clean and repair damage caused by installation or use of temporary facilities.
C. Restore permanent facilities used during construction to specified condition.
D. Comply with paragraph 1.11 of Section 01500 (Temporary Facilities and Controls).

1.3 SUBSTANTIAL COMPLETION

A. When Contractor considers Work or designated portion of the Work as Substantially Complete, submit timely written notice to Owner, with list of items remaining to be completed or corrected.
B. Within reasonable time, Owner will inspect to determine status of completion.
C. Should Owner determine that Work is not Substantially Complete, Owner will promptly notify Contractor in writing, listing all defects and omissions.
D. Remedy deficiencies and send a second written notice of Substantial Completion. Owner will reinspect the Work. If deficiencies previously noted are not corrected on reinspection, then Contractor shall pay the cost of the reinspection.
E. When Owner concurs that Work is Substantially Complete, Owner will issue a Certificate of Substantial Completion, accompanied by Contractor's list of items to be completed or corrected as verified by Owner.
F. Before a Certificate of Substantial Completion will be issued, Contractor must accomplish:
   1. Startup of manufactured units, equipment, and systems that require startup and run for periods prescribed by Owner.
   2. Commissioning.
   3. Training.
   4. Submittal of final Installation, Operation, and Maintenance Manuals.
G. A punch list examination will be performed upon Substantial Completion. One follow-up review of punch list items for each discipline will be provided. If further Site visits are

required to review punch list items due to incompleteness of the Work by Contractor, Contractor shall reimburse Owner for costs associated with these visits.

1.4 FINAL COMPLETION

A. Final Completion occurs when Work meets requirements for Owner's Final Acceptance. When Contractor considers Work is Finally Complete, submit written certification that:
   1. Contractor has inspected Work for compliance with Contract Documents, and all requirements for Final Acceptance have been met.
   2. Except for Contractor maintenance after Final Acceptance, Work has been completed in accordance with Contract Documents and deficiencies listed with Certificate of Substantial Completion have been corrected. Equipment and systems have been tested in the presence of Owner, and are operative.
   3. Work is complete and ready for final inspection.

B. In addition to submittals required by Contract Documents, provide submittals required by governing authorities and submit final statement of accounting giving total adjusted Contract Sum, previous payments, and sum remaining due.

C. When Owner finds Work is acceptable and final closeout submittals are complete, Owner will issue final Change Order reflecting approved adjustments to Contract Sum not previously made by Change Order. Should Owner determine that Work is incomplete or Defective:
   1. Owner promptly will so notify Contractor, in writing, listing the incomplete or Defective items.
   2. Promptly remedy the deficiencies and notify the Owner when it is ready for reinspection.
   3. When Owner determines that the Work is acceptable under the Contract Documents, Owner will request Contractor to make closeout submittals.

D. Final adjustments of accounts:
   1. Submit a final statement of accounting to Owner, showing all adjustments to the Contract Sum and complete and execute Document 00650 (Agreement and Release of Any and All Claims).
   2. If so required, Owner shall prepare a final Change Order for submittal to Contractor, showing adjustments to the Contract Sum that were not previously made into a Contract Modification.

1.5 PROJECT RECORD DOCUMENTS

A. Contract Documents will not be closed out and final payment will not be made until completion and submittal of Project Record Documents described in Section 01780 (Project Record Documents).

1.6 PROJECT GUARANTEE

A. Requirements for Contractor's guarantee of completed Work are included in Article 9 of Document 00700 (General Conditions). Guarantee Work done under Contract against failures, leaks, or breaks or other unsatisfactory conditions due to defective equipment, materials, or workmanship, and perform repair work or replacement required, at Contractor's sole expense, for period of one year from date of Final Acceptance.

B. Neither recordation of Final Acceptance nor final certificate for payment nor provision of the Contract nor partial or entire use or occupancy of premises by Owner shall constitute acceptance of Work not done in accordance with Contract Documents nor relieve Contractor

of liability in respect to express warranties or responsibility for faulty materials or workmanship.

C. Owner may make repairs to Defective Work as set forth in Document 00700 (General Conditions), paragraph 9.3.

D. If, after installation, operation, or use of materials or equipment to be provided under Contract proves to be unsatisfactory to Owner, Owner shall have right to operate and use materials or equipment until said materials and equipment can, without damage to Owner, be taken out of service for correction or replacement. Period of use of Defective materials or equipment pending correction or replacement shall in no way decrease guarantee period required for acceptable corrected or replaced items of materials or equipment.

E. Nothing in this Section 01770 shall be construed to limit, relieve, or release Contractor's, Subcontractors', and equipment suppliers' liability to Owner for damages sustained as result of latent defects in equipment caused by negligence of suppliers' agents, employees, or Subcontractors. Stated in another manner, warranty contained in the Contract Documents shall not amount to, nor shall it be deemed to be, waiver by Owner of any rights or remedies (or time limits in which to enforce such rights or remedies) it may have for Defective workmanship or Defective materials under laws of this State pertaining to acts of negligence.

1.7 WARRANTIES

A. Execute Contractor's Submittals and assemble warranty documents and operation and maintenance manuals executed or supplied by Subcontractors, suppliers, and manufacturers.
   1. Provide table of contents and assemble in 8½ inches by 11 inches three-ring binder with durable plastic cover, appropriately separated and organized.
   2. Assemble in Specification Section order.

B. Submit material prior to final Application for Payment.
   1. For equipment put into use with Owner's permission during construction, submit within 14 Days after first operation.
   2. For items of Work delayed materially beyond Date of Substantial Completion, provide updated Submittal within 14 Days after acceptance, listing date of acceptance as start of warranty period.

C. Warranties are intended to protect Owner against failure of Work and against deficient, Defective, and faulty materials and workmanship, regardless of sources.

D. Limitations: Warranties are not intended to cover failures that result from the following:
   1. Unusual or abnormal phenomena of the elements
   2. Vandalism after Substantial Completion
   3. Insurrection or acts of aggression including war

E. Related Damages and Losses: Remove and replace Work which is damaged as result of Defective Work, or which must be removed and replaced to provide access for correction of warranted Work.

F. Warranty Reinstatement: After correction of warranted Work, reinstate warranty for corrected Work to date of original warranty expiration or to a date not less than one year after corrected Work was done, whichever is later.

G. Replacement Cost: Replace or restore failing warranted items without regard to anticipated useful service lives.

H. Warranty Forms: Submit drafts to Owner for approval prior to execution. Forms shall not detract from or confuse requirements or interpretations of Contract Documents.

1. Warranty shall be countersigned by manufacturers.
2. Where specified, warranty shall be countersigned by Subcontractors and installers.

I. Rejection of Warranties: Owner reserves right to reject unsolicited and coincidental product warranties that detract from or confuse requirements or interpretations of Contract Documents.

J. Term of Warranties: For materials, equipment, systems, and workmanship, warranty period shall be one year minimum from date of Final Completion of entire Work except where:
1. Detailed Specifications for certain materials, equipment or systems require longer warranty periods.
2. Materials, equipment or systems are put into beneficial use of Owner prior to Final Completion as agreed to in writing by Owner.

K. Transfer of Warranties: Any warranty shall automatically transfer, without charge, to a subsequent owner who acquires the Project. Any transfer of the Project shall not extend the duration of any warranty.

L. Warranty of Title: No material, supplies, or equipment for Work under Contract shall be purchased subject to any chattel mortgage, security agreement, or under a conditional sale or other agreement by which an interest therein or any part thereof is retained by seller or supplier. Contractor warrants good title to all material, supplies, and equipment installed or incorporated in Work and agrees upon completion of all Work to deliver premises, together with improvements and appurtenances constructed or placed thereon by Contractor, to Owner free from any claim, liens, security interest, or charges, and further agrees that neither Contractor nor any person, firm, or corporation furnishing any materials or labor for any Work covered by Contract shall have right to lien upon premises or improvement or appurtenances thereon. Nothing contained in this paragraph, however, shall defeat or impair right of persons furnishing materials or labor under bond given by Contractor for their protection or any rights under law permitting persons to look to funds due Contractor in hands of Owner.

1.8 TURN-IN

A. Contract Documents will not be closed out and final payment will not be made until all keys and locks issued to Contractor during prosecution of Work and letters from property owners, if required under paragraph 1.2.F of Section 01740 (Cleaning), are turned in to Owner.

1.9 COMPUTER PROGRAMS

A. When any equipment requires operation by computer programs, submit 5 sets of the program, on appropriate electronic media, plus all user manuals and guides for operating the programs and making changes in the programs for upgrading and expanding the databases. Program shall be Windows XP compatible. Provide required licenses to Owner at no additional cost.

1.10 RELEASE OF CLAIMS

A. Contract Documents will not be closed out and final payment will not be made until Document 00650 (Agreement and Release of Any and All Claims) is completed and executed by Contractor and Owner.

1.11 FIRE INSPECTION COORDINATION

A. Coordinate fire inspection and secure sufficient notice to Owner to permit convenient scheduling (if applicable).

1.12 BUILDING INSPECTION COORDINATION

A. Coordinate with Owner a final inspection for the purpose of obtaining an occupancy certificate (if applicable).

PART 2 PRODUCTS – NOT USED

PART 3 EXECUTION – NOT USED

END OF SECTION

SECTION 01780

PROJECT RECORD DOCUMENTS

PART 1 GENERAL

1.1 SUMMARY

A. Section Includes:
   1. Administrative and procedural requirements for the following Project Record Documents:
      a. Project Record Drawings and Shop Drawings
      b. Project Record Specifications
      c. Miscellaneous Project Record Submittals
B. Specific Project Record Documents requirements that expand requirements of this Section may be included in the individual Sections of Divisions 2 through 16.

1.2 SUBMITTAL

A. During construction, bring hard-copy updates of the Project Record Drawings (Field Set) to monthly Progress Payment Meetings.
B. At completion of Project, deliver Project Record Documents to Owner. Project Record Documents required include:
   1. Marked-up copies of Drawings (Field Set)
   2. Final Project Record Drawings
   3. Marked-up copies of Specifications
   4. Marked-up copies of Shop Drawings, if applicable
   5. Miscellaneous Project Record Submittals
C. Accompany submittal with transmittal letter containing:
   1. Date
   2. Project title and Owner's Contract number
   3. Contractor's name and address
   4. Number and title of each Project Record Document
   5. Certification that each document as submitted is complete and accurate, and signature of Contractor or Contractor's authorized representative.

1.3 GENERAL

A. Prior to start of construction, Owner will provide one full size set of Drawings and one copy of the Project Manual for Contractor's use for recording as-built conditions.
B. Post changes and Modifications to the Contract Documents as they occur. Do not wait until the end of the Project. Owner will review Project Record Documents on a monthly basis to assure compliance with this requirement.
C. Refer instances of uncertainty to Owner for resolution.
D. Maintenance of Documents:
   1. Store Project Record Documents in the field office apart from Contract Documents used for construction.
   2. Do not permit Project Record Documents to be used for construction purposes.
   3. Maintain Project Record Documents in good order and in a clean, dry, neat, and legible condition.
   4. Make Project Record Documents available at all times for inspection by Owner.

1.4 PROJECT RECORD DRAWINGS AND SHOP DRAWINGS

A. Quality Draftsmanship: All Work on Project Record Drawings and Project Record Shop Drawings shall be performed by competent drafters and shall be clear and fully legible. Owner shall be the sole judge of the acceptability of the Project Record Drawings and Project Record Shop Drawings.

B. Mark-up Procedure: During the construction period, maintain a set of full size prints of Drawings and Shop Drawings for Project Record Documents purposes ("Field Set"). Stamp each document (on each sheet or page) "PROJECT RECORD" in 2-inch high letters. Keep record documents current. Note: A reference by number to a Change Order, CCD, RFI, RFQ, RFP, Field Order or other such document is not acceptable as sufficient record information on any record document. Do not permanently conceal any Work until required information has been recorded.

1. Mark Drawings and Shop Drawings to indicate the actual installation where the installation varies appreciably from the installation shown originally. Give particular attention to information on concealed elements that would be difficult to identify or measure and record later. Items required to be marked include but are not limited to:
   a. Dimensional changes to the Drawings and Shop Drawings
   b. Revisions to details shown on the Drawings and Shop Drawings
   c. Depths of various elements of foundation in relation to main floor level or survey datum
   d. Variable or concealed field conditions
   e. Horizontal and vertical location of underground utilities and appurtenances referenced to permanent surface improvements
   f. Location of internal utilities and appurtenances concealed in construction referenced to visible and accessible features of structure
   g. Locations of underground Work, points of connection with existing utilities, changes in direction, valves, manholes, catch basins, capped stub outs, invert elevations, and similar items
   h. Actual numbering and set points of each electrical circuit
   i. Field changes of dimension and detail
   j. Revisions to routing of piping and conduits
   k. Revisions to electrical circuitry
   l. Actual equipment locations
   m. Duct, conduit, and cable size and routing
   n. Changes made by Change Order or CCD
   o. Details not on original Drawings or Shop Drawings
2. Mark completely and accurately Drawings or Shop Drawings, whichever is the most capable of showing actual physical conditions. Where Shop Drawings are marked, show cross-reference on Drawings location.
3. Mark important additional information that was either shown schematically or omitted from original Drawings.
4. Use revision block to record information related to the mark-ups, including CCD numbers; Alternate numbers, Change Order numbers, and similar identification.
5. Mark Drawing and Shop Drawing sets with red, erasable colored pencil.
6. Responsibility for Mark-up: Where feasible, the individual or entity who obtained Project Record Drawing or Shop Drawing data, whether the individual or entity is the installer, Subcontractor, or similar entity, is required to prepare the mark-up on Project Record Drawings or Shop Drawings.

a. Accurately record information in an understandable and legible drawing technique.
b. Record data as soon as possible after it has been obtained. In the case of concealed installations, record and check the mark-up prior to concealment.

C. Preparation of Project Record Drawings and Project Record Shop Drawings: Immediately prior to inspection for Certification of Substantial Completion, review completed marked-up Project Record Drawings (Field Set)and Project Record Shop Drawings with Owner. When authorized, prepare final Project Record Drawings and Project Record Shop Drawings.
1. Project Record Drawings:
a. Prior to review of Contractor's Application for Payment, the Owner and Contractor will review updates to the Field Set of Project Record Drawings to verify that record documents are current.
b. Upon Certification of Substantial Completion, Contractor will transfer all updates from the "Field Set" to a clean set of full size contract drawings furnished by the Owner. Each sheet shall include a Project Record Drawing stamp which is dated and "wet signed" by the Contractor.
c. If Contractor chooses and Owner approves in advance, Contractor may submit electronic updates on final Project Record Drawings, so long as final Project Record Drawings preserve the integrity of the data and are compatible with Owner's software.
2. Project Record Shop Drawings:
a. Transfer all information previously marked on Field Set to a separate clean set of Shop Drawings provided by Owner. Erase, redraw, and add details and notations where applicable. Identify and date each Shop Drawing; include the printed designation "PROJECT RECORD SHOP DRAWING" in a prominent location on each Shop Drawing. Bind the set with durable paper cover sheets, with appropriate identification, including titles, dates, and other information on cover sheet.

D. In addition to requirements of this Section, comply with supplemental requirements of Divisions 15.
1. Division 15 of the Specifications may require the preparation of large scale, detailed layout drawings of the Work of that Division. These layout drawings are not Shop Drawings as defined by Section 01420 (References and Definitions), but together with Shop Drawings or layout drawings of all other affected Sections are used to check, coordinate, and integrate the work of the various Sections.
2. Include these layout drawings as part of the Project Record Documents.

1.5 PROJECT RECORD SPECIFICATIONS

A. During the construction period, maintain one copy of the Specifications, including Addenda and Modifications issued, for Project Record Documents purposes.

B. Mark the Project Record Specifications to indicate the actual installation where the installation varies substantially from that indicated in Specifications issued. Note related Project Record Drawing information, where applicable. Give particular attention to substitutions, selection of product options, Change Order and CCD Work, and information on concealed installation that would be difficult to identify or measure and record later.
1. In each Specification Section where products, materials or units of equipment are specified or scheduled, mark the copy with the proprietary name and model number of the product furnished.

2. Record the name of the manufacturer, catalog number, supplier and installer, and other information necessary to provide a record of selections made and to document coordination with Installation, Operation, and Maintenance Manuals.
3. For each principal product specified, indicate whether data has been submitted in Installation, Operation, and Maintenance Manuals.

C. Preparation of Project Record Specifications: Immediately prior to inspection for Certification of Substantial Completion, review completed Field Set Project Record Specifications with Owner. When authorized, prepare final Project Record Specifications.
1. After Substantial Completion and before Final Completion, carefully transfer all data shown on the Field Set to a separate clean set of Specifications provided by Owner. Include the printed designation "PROJECT RECORD SPECIFICATION" in a prominent location on the Specifications.

1.6 MISCELLANEOUS PROJECT RECORD SUBMITTALS

A. Refer to other Specification Sections for miscellaneous record keeping requirements and submittals in connection with various construction activities. Immediately prior to Substantial Completion, complete miscellaneous records and place in good order, properly identified and bound or filed, ready for use and reference. Submit to the Owner for Owner's records. Categories of requirements resulting in miscellaneous records may include, but are not limited to, the following:
1. List all products used in the Project, organized by Specification section and article. Product list shall be submitted in an electronic format, compatible with Microsoft Excel 2000.
2. Delivery records of materials incorporated into the Work
3. Records of product lot numbers and expiration dates
4. Quality Assurance/Quality Control records for field Work

PART 2 PRODUCTS – NOT USED

PART 3 EXECUTION – NOT USED

END OF SECTION

SECTION 01810

COMMISSIONING

PART 1 GENERAL

1.1 DEFINITIONS

A. Functional testing: testing necessary to determine if installed equipment and systems will operate in the manner in which they are intended to operate.

1.2 TESTING, ADJUSTING, AND BALANCING PROCEDURES

A. General:
   1. After the initial checkout has been completed to the satisfaction of Owner per Section 01750 (Starting and Adjusting), commence functional testing, including start up and operation of individual subsystems, pieces of equipment and instruments.
   2. Debug, tune-up, and adjust as necessary.
   3. In addition to functional tests, specific testing shall be required of installed equipment and systems as specified in individual Specification Sections.
   4. Work will not be accepted until all functional and specific tests have been satisfactorily performed.

B. Electrical and Mechanical Functional Tests:
   1. Perform mechanical commissioning per Section 15990 (Commissioning of HVAC Systems)

PART 2 PRODUCTS - NOT USED

PART 3 EXECUTION - NOT USED

END OF SECTION

SECTION 01825

TRAINING

PART 1 GENERAL

1.1 SUMMARY

A. Section Includes:
   1. Requirements for training Owner's personnel, by persons retained by Contractor specifically for the purpose, on the proper operation and maintenance of the equipment and systems supplied under the Contract.

1.2 SUBMITTALS

A. Quality Assurance/Control Submittals:
   1. Lesson plans for each training session to be conducted by the manufacturer's representatives. Lesson plans shall include:
      a. Subject of each training session
      b. Identity and qualifications of individuals to be conducting the training
      c. Proposed schedule of each training session including date, time, instructor and topic
      d. All sessions shall be aligned with shift schedules of the operations and maintenance staff
   2. Provide an electronic version of all training materials.

1.3 TRAINING - GENERAL

A. Where specified, the Contractor shall conduct training sessions for Owner's personnel to instruct the staff on the proper operation, care, and maintenance of the equipment and systems installed under this Contract. Training shall take place under the conditions specified in the following paragraphs. Draft Installation, Operation, and Maintenance manuals shall be available at least 30 Days prior to the date scheduled for the individual training session.

1.4 LOCATION

A. Unless otherwise approved by Owner, training sessions shall take place in a training room selected by Owner at the Site.

1.5 LESSON PLANS

A. Formal written lesson plans shall be prepared for each training session. Lesson plans shall contain an outline of the material to be presented along with a description of visual aids to be utilized during the session. Each plan shall contain a time allocation for each subject.
B. One complete set of originals of the lesson plans, training manuals, handouts, visual aids, and reference material shall be the property of Owner and shall be suitably bound for proper organization and easy reproduction. The Contractor shall furnish ten copies of necessary training manuals, handouts, visual aids, and reference materials at least 7 Days prior to each training session.

1.6 FORMAT AND CONTENT

A. Each training session shall be comprised of time spent both in the classroom and at the specific location of the subject equipment or system. As a minimum, training session shall cover the following subjects for each item of equipment or system:

1. Familiarization:
   a. Review catalog, parts lists, drawings, etc., which have been previously provided for the plant files and Installation, Operation, and Maintenance manuals.
   b. Review the installation of the specific equipment items.
   c. Demonstrate the unit and indicate how all parts of the Specifications are met.
   d. Answer questions.
2. Safety:
   a. Using material previously provided, review safety references.
   b. Discuss proper precautions around equipment.
3. Operation:
   a. Using material previously provided, review reference literature.
   b. Explain all modes of operation (including emergency).
   c. Review with Owner's personnel proper use of the equipment.
4. Preventive Maintenance:
   a. Using material previously provided, review preventive maintenance (PM) lists including:
      1) Reference material.
      2) Daily, weekly, monthly, quarterly, semiannual, and annual jobs.
   b. Show how to perform PM jobs.
   c. Show Owner's personnel what to look for as indicators of equipment problems.
5. Corrective Maintenance:
   a. List possible problems.
   b. Discuss repairs; identify special problems.
   c. Open up equipment and demonstrate procedures, where practical.
6. Parts:
   a. Show how to use previously provided parts lists and order parts.
   b. Review spare parts on hand. Make recommendations regarding additional parts that should be available.
7. Local Representatives:
   a. Where to order parts: name, address, telephone.
   b. Service problems:
      1) Who to call.
      2) How to get emergency help.
8. Installation, Operation, and Maintenance Manuals:
   a. Review any other material submitted.
   b. Update material, as required.

1.7 VIDEO RECORDING

A. Owner may retain the services of a commercial video taping service to record each training session. After taping, Owner may edit and supplement material with professionally produced graphics to provide a permanent record. Advise all manufacturers providing training sessions that the material will be video taped.

PART 2 PRODUCTS – NOT USED

PART 3 EXECUTION

3.1 GENERAL

A. Training shall be conducted no earlier than seven Days after starting and adjusting commences. Classes shall be scheduled such that classroom sessions are interspersed with field instruction in logical sequence. The Contractor shall arrange to have the training conducted on consecutive Wednesdays and Thursdays, with no more than eight hours of classes scheduled for any one Day. Concurrent classes will not be allowed.

B. Visits to the Site by manufacturer's representatives for demonstration and training purposes shall be deemed to be a separate visit to the Site, independent of visits required for equipment checkout, testing, and startup unless prior approval of Owner is received to combine visits.

C. The following services shall be provided for each item of equipment or system as required in individual Specification sections. Additional services shall be provided, where specifically required in individual Specification sections.

1. Operations personnel classroom equipment training shall include, at a minimum:
   a. Using slides and drawings, discuss the equipment's specific location in the plant and an operational overview.
   b. Purpose and function of the equipment (or systems).
   c. A working knowledge of the operating theory of the equipment.
   d. Start-up, shutdown, normal operation, and emergency operating procedures, including a discussion on system integration and electrical interlocks, if any.
   e. Identify and discuss safety items and procedures.
   f. Routine preventative maintenance, including specific details on lubrication and maintenance of corrosion protection of the equipment and ancillary components.
   g. Operator detection, without test instruments, of specific equipment trouble symptoms.
   h. Required equipment exercise procedures and intervals.
   i. Routine disassembly and assembly of equipment if applicable for purposes such as operator inspection of equipment.
   j. Routing tests of electrical equipment, including schedule of tests.
2. Operations personnel hands-on equipment training shall include, at a minimum:
   a. Identify location of equipment and review the purpose.
   b. Identifying piping and flow options.
   c. Identifying valves and their purpose.
   d. Identifying instrumentation:
      1) Location of primary element.
      2) Location of instrument readout.
      3) Discuss purpose, basic operation, and information interpretation.
   e. Discuss, demonstrate, and perform standard operating procedures and operators' round checks.
   f. Discuss and perform the preventative maintenance activities.
   g. Discuss and perform start-up and shutdown procedures.
   h. Perform the required equipment exercise procedures.
   i. Perform routine disassembly and assembly of equipment if applicable.
   j. Identify and review safety items and perform safety procedures, if feasible.

   k. Routine tests of electrical equipment.
   l. Operation of electrical equipment and appurtenances.
3. Maintenance and repair personnel classroom equipment training shall include, at a minimum:
   a. Theory of operation.
   b. Description and function of equipment.
   c. Start-up and shutdown procedures.
   d. Normal and major repair procedures.
   e. Equipment inspection and troubleshooting procedures including the use of applicable test instruments and the "pass" and "no pass" test instrument readings.
   f. Routine and long-term calibration procedures.
   g. Safety procedures.
   h. Preventative maintenance such as lubrication; normal maintenance such as belt, seal, and bearing replacement; and up to major repairs such as replacement of major equipment part(s) with the use of special tools, bridge cranes, welding jigs, etc.
   i. Discuss preventative maintenance Work based on hours of run time.
   j. Discuss predictive maintenance.
   k. Maintenance and repair of electrical equipment and appurtenances.
4. Maintenance and repair personnel hands-on equipment training shall include, at a minimum:
   a. Locate and identify equipment components.
   b. Review the equipment function and theory of operation.
   c. Review normal repair procedures.
   d. Perform start-up and shutdown procedures.
   e. Review and perform the safety procedures.
   f. Perform routine assembly and disassembly of equipment if applicable.
   g. Identify and review safety items and perform safety procedures, if feasible.
   h. Perform Owner-approved practice maintenance and repair job(s), including mechanical and electrical adjustments and calibration and troubleshooting equipment problems.

END OF SECTION

DIVISION 2

SITE CONSTRUCTION

SECTION 02240

DEWATERING

PART 1 GENERAL

1.1 SYSTEM DESCRIPTION

A. Performance Requirements:
   1. Be sufficient in size and capacity to control surface and sub-surface water (groundwater).
   2. Allow for the safe performance of Work within excavations.
   3. Allow material to be excavated and placed in a dry condition.
   4. Provide sufficiently dry ground conditions to permit excavation and placement of materials to grades indicated and allow construction to be performed to the specified quality required for the various items of Work affected by dewatering.
   5. Prevent loss of fines, seepage, boils, quick conditions, or softening of foundation strata.
   6. Maintain adequate control of groundwater so that the stability of excavated and constructed slopes is not adversely affected by saturated soil and damage to structures or other facilities does not occur.
   7. Prevent erosion.
   8. Prevent flooding of excavations.
   9. Protect excavations from becoming wet from surface water.
   10. Discharge and dispose of water in a manner that complies with applicable permits, laws, and regulations, causes no injury to public and private property, and is not a menace to public health.
   11. Keep trenches and pits free from water while pipe or other structures are installed and until backfilling has progressed to a sufficient height to anchor the Work against possible flotation or leakage.

1.2 QUALITY ASSURANCE

A. Control the rate and effect of dewatering in such a manner as to avoid settlement and subsidence.
B. Ensure the integrity of the finished Project.
C. Where critical structures or facilities exist immediately adjacent to areas of proposed dewatering, establish reference points and observe at frequent intervals to detect any settlement that may develop. The responsibility for conducting the dewatering operation in a manner that shall protect adjacent structures and facilities rests solely with Contractor. The cost of repairing any damage to adjacent structures and restoration of facilities shall be the responsibility of Contractor.

PART 2 - PRODUCTS

2.1 EQUIPMENT

A. Dewatering, where required, may include, but not be limited to, the use of well points, sump pumps, temporary pipelines for water disposal, rock or gravel placement, and other means.

PART 3 - EXECUTION

3.1 GENERAL

A. Portions of the Work are subject to the dewatering requirements specified herein.
B. Have on hand at all times sufficient pumping equipment and machinery in good working condition.
C. Have available at all times competent workers for the operation of the pumping equipment.
D. Have available at all times adequate standby power generation equipment to ensure efficient maintenance of dewatering operation during power failure.
E. Unless otherwise indicated, maintain water level at least two feet below the bottom of excavation in Work areas where groundwater occurs.
F. Commence dewatering when groundwater is first encountered and continue throughout excavation, construction, pipe laying, backfilling, as applicable, and until water can be allowed to rise in accordance with the provisions of this Section or other requirements.
G. At all times, Site grading shall promote drainage. Divert surface runoff from excavations. Collect water entering excavation from surface runoff in shallow ditches around the perimeter of the excavation, drain to sumps, and pump or drain by gravity from the excavation to maintain a bottom free from standing water.
H. Preserve the undisturbed bearing capacity of the subgrade soils at bottom of excavation.
I. If foundation soils are disturbed or loosened by the upward seepage of water or an uncontrolled flow of water, excavate affected areas and replace with drain rock at no additional cost to Owner.
J. Prevent flotation by maintaining a positive and continuous removal of water.
K. If well points or wells are used:
    1. Adequately space to provide the necessary dewatering.
    2. Sandpack and/or other means to prevent pumping of fine sands or silts from the subsurface.
    3. Maintain a continual check to ensure that the subsurface soil is not being removed by the dewatering operation.
L. Furnish, install, operate, and maintain necessary pumping and other equipment for dewatering the various parts of the Work, and control surface flow and groundwater that may be encountered while performing the Work. Remove water that may accumulate in the excavation while the Work progresses so Work can be performed in dry conditions. Have sufficient pumping equipment available for immediate use. Under no circumstances is the laying of pipe or placing of concrete in water permitted.
M. Release groundwater to its static level in such a manner as to maintain the undisturbed state of the natural foundation soils, prevent disturbance of compacted backfill, and prevent flotation or movement of structures and pipelines.
N. Ensure that excavations are dry before Work is undertaken.
O. The discharge and disposal of water shall not result in the deposition of sediments that could cause current or future nuisance or adversely affect the beneficial uses of the receiving water area.

END OF SECTION

SECTION 02255

SHORING

PART 1 GENERAL

1.1 SUMMARY

A. Section Includes:
   1. Shoring systems for sanitary sewer installation and trenching activities, including manhole installation.

1.2 SUBMITTALS

A. Shop Drawings:
   1. Shoring System(s):
      a. Include supporting calculations for proposed shoring systems. Include details, arrangements, and the methods of installation, as applicable. Indicate depth of excavation at which support system will be installed.
      b. Show in the calculations the full excavation depth load to be carried by various members of the support system. Include design loads and calculated deflections of shoring and support members.
      c. Describe method of installation and removal of shoring, including the sequencing of specific components as related to excavation, construction, and backfilling operations.
B. Quality Assurance/Quality Control Submittals:
   1. Qualification Statements: Provide evidence of license for California civil or structural engineer.

1.3 DEFINITIONS

A. For the purposes of this section, shoring or shoring system shall mean shoring, sheeting, shielding, sloping, bracing, or equivalent provisions and protective systems for worker protection from the hazard of caving ground in open trenches, pits, and other excavations.

1.4 SYSTEM DESCRIPTION

A. Design Requirements:
   1. Comply with CCR Title 8, Division 1, Chapter 4, subchapter 4 (Construction Safety Orders), Section 1541.1.
   2. Support earth and rock pressure; unrelieved hydrostatic pressures; utility loads; equipment; applicable traffic and construction loads; earthquake loads, if required; and other surcharge loads.
   3. Support the maximum loads that can occur during construction.
B. Performance Requirements:
   1. Provide a stable excavation without lateral or vertical movement or settlement of the ground.
   2. Prevent damage to or movement of adjacent structures and utilities.
   3. Provide dry conditions to facilitate expeditious construction within excavations.
   4. Maintain stability of sides and bottom of excavation.

1.5 PROJECT CONDITIONS

A. Existing Conditions: If existing utilities interfere with proposed method of support, modify the support system at Contractor's expense.

PART 2 PRODUCTS

2.1 MATERIALS

A. Timber and structural metal used for the supporting system, whether new or used shall be sound and free from defects that may impair their strength.

PART 3 - EXECUTION

3.1 GENERAL

A. Proceed with caution in areas where utilities are within the shoring and excavation prism. Expose utilities by hand excavation.
B. Maintain bracing support members in tight contact with each other and with the surface being supported.
C. Remove sheet piling and other shoring in such a manner as to prevent caving at the walls of excavations or damage to piping, structures, or other improvements.
D. Immediately fill voids created by the removal of the supporting system with well-graded cohesionless sand, lean concrete, or sand cement grout.
E. Remove shoring as backfilling progresses but only when banks are stable and safe from caving or collapse.
F. Unless otherwise approved by Owner, leave no sheeting in a trench and make no backfill against the sheeting before it is removed. If sheeting extends below the invert of the pipe and is approved by Owner to be left in place, remove the upper portion by trimming in a manner satisfactory to the Owner.

END OF SECTION

SECTION 02315

EXCAVATION, BEDDING, BACKFILL, AND RESURFACING

PART 1 GENERAL

1.1 SUMMARY

A. Section Includes:
   1. Trench excavation, backfilling, and compaction for plumbing, electrical, sanitary sewer, and related utilities inside and outside the building
   2. Bedding and backfill
   3. Drain rock for manholes
   4. Aggregate base for trench backfill and new parking spaces
   5. Existing asphalt concrete removal and disposal
   6. Grading for new and existing parking spaces

B. Related Sections:
   1. Section 02240 (Dewatering)
   2. Section 02535 (Sanitary Sewage Systems)
   3. Section 02725 (Aggregate Base)

1.2 REFERENCES

A.	California Test 216	Method of Test for Relative Compaction of Untreated and Treated Soils and Aggregates
B.	California Test 231	Method of Test for Relative Compaction of Untreated and Treated Soils and Aggregates by the Area Concept Utilizing Nuclear Gauges
C.	Caltrans 68-1.025	Permeable Material
D.	Caltrans 26-1.02	Class II Aggregate Base

1.3 SUBMITTALS

A. Quality Assurance/Control Submittals:
   1. Design Data:
      a. Drain rock: Gradation and Certification
      b. Bedding Material: Gradation and Certification
   2. Test Reports:
      a. Class II Aggregate Base for trench backfill material: Test results on material to confirm specified characteristics.
      b. Bedding Material: Test results on material to confirm specified characteristics
      c. Drain rock: Test results on material to confirm specified characteristics

PART 2 PRODUCTS

2.1 MATERIALS

A. Bedding Material (Pipe and Conduit Trenches):
   1. Granular bedding material:
      a. Granular material
      b. 100 percent crushed rock with 100 percent crushed faces
      c. Sand equivalent not less than 30

d. R-value not less than 78
e. Size and gradation within the following limits:

Sieve Size	Percent Passing Sieve
3/4 inch (19 mm)	100
3/8 inch (10 mm)	80
No. 4	35 to 55
No. 200	3 to 9

2. Manholes structured bedding material: drain rock
   a. Gravel or crushed rock
   b. 1.5 inch (37.5 mm)
   c. In accordance with Caltrans 68-1.025, Class 1, Type B

B. Trench backfill material (Pipe and Conduit Trenches):
   1. Trench Structural Backfill: Class II Aggregate Base, ¾ inch maximum in accordance with Caltrans 26-1.02A

C. Manholes - structural backfill materials:

D. Aggregate Base:
   1. Class II, 3/4 inch (19 mm) maximum, in accordance with Caltrans 26-1.02

E. Trench Surfacing Material:
   1. Aggregate Base:
      a. Per Section 02725 (Aggregate Base)

PART 3 EXECUTION

3.1 GENERAL

A. Remove and dispose of unsuitable materials as determined by Owner to a site provided by Contractor and pre-approved by Owner.

B. Regulations: The Contractor is cautioned that the County of Sonoma and cities within the County have regulations governing the disposal of rubble, broken pavement, and similar materials. The Contractor is also cautioned that placement of fill in wetland areas is subject to permit procedures of the US Army Corps of Engineers. The Contractor shall become familiarized with the requirements of the agency having jurisdiction over any contemplated disposal site and shall comply with all such requirements.

3.2 VERIFICATION

A. Verify slopes and invert elevations and notify Owner of any discrepancies prior to commencing trenching.

3.3 EXCAVATION

A. General:
   1. Excavate to lines, grades, and dimensions indicated.
   2. Perform excavation at times and by methods that facilitate subsequent moisture control and compaction.
   3. Breakdown sides of stump holes, test pits, and similar cavities, as directed by Owner.
   4. Remove loose or disturbed soil.
   5. Fill cavities with approved compacted material in 8-inch lifts.

B. Excavation:
   1. Remove rock excavation, clay, silt, gravel, hard pan, loose shale, and loose stone as directed by Owner.

3.4 TRENCH EXCAVATION

A. Cut, remove, and haul away from the Site any existing pavement over the trench. Sawcut pavement, curbs, gutters, and other structures between portion to remain and portion to be removed. Sawcutting of asphalt shall extend 6 inches beyond each side of excavated trench. Sawcutting of concrete shall extend a minimum of 3.28 feet beyond each side of excavated trench. Lay all sewer pipe in open trench as specified in Section 02535 (Sanitary Sewage Systems). Sawcut curb, gutter, and sidewalk to the nearest weakened plane joint.

B. When excavation is in rocky ground, excavate the trench a minimum of 3 inches below the grade of the bottom of the pipe, or ¼ of the pipe outside diameter, whichever is greater, and place sufficient bedding material in the trench; tamp to bring the trench bottom up to the grade of the bottom of the pipe. The relative compaction of the tamped material shall not be less than 90 percent as determined by California Test 216. It is the intention of these requirements to provide firm, uniform bearing for the pipe.

C. Material excavated in streets and roadways and placed alongside the trench shall be trimmed up so as to cause as little inconvenience as possible to public traffic. Immediately remove and dispose of all material excavated in streets and roadways not required for backfill. No surplus material shall be placed on private property unless written permission, signed by the owner of the property, is furnished to Owner.

D. If unstable trench bottoms are encountered, over-excavate to a maximum of 12 inches below required trench bottom, as directed by Owner. Place geotextile stabilization fabric and drain rock material up to the bottom plane of the bedding material as indicated, in lifts not exceeding 6 inches in loose thickness; tamp to 90 percent relative compaction.

E. Remove all water that may accumulate in the excavation during the process of Work so that all Work can be done in the dry in accordance with Section 02240 (Dewatering). Keep trenches free from water while the pipe or other structures are installed and until backfilling has progressed to a sufficient height to anchor the Work against possible flotation or leakage. At all times, have sufficient pumping machinery available for immediate use. Dispose of water in such a manner as to cause no injury to public or private property, and not be a menace to public health.

F. Remove, transport, and dispose of excavated trench materials:
   1. Disposal sites for excavated trench materials shall be approved prior to disposal by PRMD (obtain appropriate permit), if applicable, and Owner.
   2. Before excavation is started for any run of underground piping, locate and expose all existing structures, piping, conduit, which intersect the line of the piping, to avoid possible damage to these during excavation operations and so that it may be determined if there will be any conflicts in location.
   3. Excavate trenches by open cut method to depth indicated and necessary to accommodate Work.
   4. On any given Day, excavate only the amount of trench that can be backfilled the same Day, as determined by Owner. If trenches must remain open overnight, provide steel trench plates to cover the trenches and prevent a falling hazard to people and wildlife.
   5. Excavate trenches as necessary to comply with the Drawings and Specifications, to accomplish the specified Work, and to conform to all safety and permit requirements. Do not over excavate trenches beyond these requirements, unless approved by Owner.
   6. Excavate as needed to facilitate removal of handling devices after the pipe is laid. Form bell (joint) holes at the ends of the pipe to prevent point loading at the bells or couplings and to facilitate bolting, visual inspection, and other required field operations for pipe installation. Excavate as needed outside the normal trench section at joints,

appurtenances, and connections to existing pipes, sufficient to provide adequate access for bolting, visual inspection, and other required field operations for pipe installation.

7. Grade the bottom of the trench to the line and grade to which the pipe is to be laid, with proper allowance for pipe thickness and for bedding material. Remove hard spots that would prevent a uniform thickness of bedding. Before laying each section of the pipe, check the grade and correct any irregularities found. The trench bed shall form a continuous and uniform bearing and support for the pipe at every point between bell holes, except the grade may be disturbed for the removal of lifting tackle.
8. Avoid overloading or surcharge a sufficient distance back from edge of excavation to prevent slides or caving.

3.5 EXCAVATION FOR MANHOLES

A. Excavate to elevations and dimensions indicated within a tolerance of plus or minus 1". Extend excavation a sufficient distance from structures for installing services and other construction, for compacting structure backfill material, and for inspections.
   1. Do not disturb bottom of excavation. Trim bottoms to required lines and grades to leave solid base to receive other Work.
   2. Level off bottoms of excavations. Remove loose materials and bring excavations into approved condition.
   3. Do not carry excavations lower than indicated except as directed by Owner.
   4. Notify Owner as soon as excavation is completed in order that subgrades may be inspected. Do not commence further construction until subgrade has been inspected and approved by Owner as being free of undesirable material, and of compaction density required by this Specification.

B. If undisturbed soil is not firm, as directed by Owner, over-excavate 6" minimum, and install drain rock and level the working course back to grade.

3.6 DRAIN ROCK

A. When additional gravel, crushed rock or geotextile stabilization fabric is required to stabilize a soft, wet, or spongy foundation caused by the operations of Contractor, provide such gravel, crushed rock or geotextile stabilization fabric at Contractor's expense.

B. Owner will be the sole judge of the suitability of the trench bottom, and as to the amount of gravel required, and if geotextile stabilization fabric is required to stabilize a soft foundation. Remove any soft material and replace it with drain rock.

3.7 BEDDING METHODS: PIPE AND CONDUIT

A. After the pipe has been properly laid and inspected by Owner, bedding material shall be placed to springline of pipe and worked into pipe haunches.

B. Compact bedding material by hand, tamping in layers not exceeding 3 inches in un-compacted depth.
   1. The use of machine tampers is prohibited.
   2. After hand tamping, the relative compaction of the bedding material shall be not less than 90 percent as determined by California Test 216.

C. Contractor is wholly responsible for any damage to the pipe that may occur during compaction.

D. Jetting shall not be allowed for consolidation of bedding.

E. Remove rocks or boulders that protrude into embedment zone, fill voids with bedding material, and compact to specified bedding density.

F. Place bedding material on firm unyielding subgrade so that pipe or conduit is supported for full length of barrel.
G. Exercise care during initial bedding to prevent movement of pipe and to prevent any bedding material from being deposited on joints.
H. Place bedding material in lift thicknesses capable of being compacted to specified densities, but not exceeding 8 inch.
I. Compact each lift to specified requirements.
J. Avoid displacing joints and appurtenances or causing any horizontal or vertical misalignment, separation, or distortion.

3.8 BACKFILLING METHODS: PIPE AND CONDUIT

A. Above the level of the bedding, backfill the trench with Class II aggregate base as specified in Section 02725 (Aggregate Base).
B. Jetting of trench backfill is prohibited.
C. Use mechanical compaction methods for all materials.
   1. Moisture condition and compact to 90 percent relative compaction.
   2. Moisture condition and compact to 95 percent relative compaction top 36" of trench backfill.

3.9 STRUCTURAL BEDDING AND BACKFILL: MANHOLES

A. Subgrade to receive structure bedding or backfill shall be free of undesirable material as determined by Owner and compacted to 95 percent relative density per California Test 216. Do not place any bedding or backfill material until subgrade under bedding or backfill has been inspected and approved by Owner as being free of undesirable material and compacted to specified density.
B. Place all manholes on a minimum of 6 inches of drain rock material that is spread over the entire bottom area of the structure excavation, unless otherwise indicated.
C. Place and compact backfill material in thin lifts, 8 inch maximum or as necessary to obtain required compaction density. Compact material by means of equipment of sufficient size and proper type to obtain specified density. Use hand operated equipment for backfilling next to manholes and other areas that could be damaged by the use of mechanical equipment.
D. Compact backfill to 90 percent relative density (California Test 216) for material more than 3 feet below finished grade and to 95 percent relative density (California Test 216) for material within 3 feet of finished grade.

3.10 FIELD QUALITY CONTROL

A. Site Tests:
   1. Owner will perform in-place moisture-density tests after receiving written request from Contractor.
   2. Bedding, Backfill, Structural Bedding, and Backfill Material:
      a. The in-place density and moisture of soils and aggregates may be determined by the use of nuclear methods and the area concept as per California Test 231 with the following conditions:
         1) The test for maximum density shall be determined as specified in Part II of California Test 216.

3.11 GRADING

A. Uniformly grade areas to a smooth surface, free from irregular surface changes.

1. Provide a smooth transition between adjacent existing grades and new grades.
2. Cut out soft spots, fill low spots, and trim high spots as required.

B. Finishing: Dress and grade slopes to provide a uniform surface and slopes that conform smoothly to contours or grades indicated. Finish grade all other disturbed areas to a uniform surface and to drain.

3.12 COMPACTION

A. General
1. Place and assure bedding, backfill, and fill materials achieve an equal or "higher" degree of compaction than undisturbed materials adjacent to the Work.
2. In no case shall degree of compaction below "Minimum Compaction" specified be accepted.

B. Compaction Requirements: Comply with following trench compaction criteria:

MINIMUM COMPACTIONS		
LOCATION	SOIL TYPE	DENSITY
Pipe Embedment Material:		
All locations	Cohesionless Soils	90 percent of max dry density by California Tests 216 and 231
Trench Backfill:		
Under pavements roadways surfaces	Cohesive soils (within 3 feet of finished grade)	95 percent of max dry density by California Tests 216 and 231
	Cohesive soils (3 feet from finished grade and below)	90 percent of max dry density by California Tests 216 and 231
Under non-traffic areas	Cohesive soils	80 percent of max dry density by California Tests 216 and 231

END OF SECTION

SECTION 02515

RECLAIMED WATER MAIN

PART 1 GENERAL

1.1 SUMMARY

A. Section Includes:
   1. Removal and relocation of a portion of existing reclaimed water main
   2. Water main irrigation pipe and fittings
   3. Tracer wire
   4. Cleaning and flushing
   5. Removal and abandonment of existing water pipe

B. Related Sections:
   1. Section 02315 (Excavation, Bedding, and Backfill)
   2. Section 03000 (Concrete)

1.2 REFERENCES

A. AWWA C104	Cement-Mortar Lining for Ductile-Iron Pipe and Fittings for Water
B. AWWA C110	Ductile-Iron and Gray-Iron Fittings for Water
C. AWWA C111	Rubber-Gasket Joints for Ductile-Iron Pipe and Fittings
D. AWWA C150	Standard for Thickness Design for Ductile Iron Pipe
E. AWWA C153	Ductile-Iron Compact Fittings, 3 In. through 24 In. (76 mm Through 610 mm) and 54 In. through 64 In. (1,400 mm through 1,600 mm), for Water Service
F. AWWA C509	Resilient-Seated Gate Valves for Water Supply Service
G. AWWA C900	Standard for Polyvinyl Chloride Pressure Pipe, 4 inch (101 mm) through 12 inch (305 mm) for Water
H. City of Santa Rosa Standard Drawing 853	Concrete Anchor Bolts for Vertical Bends

1.3 SUBMITTALS

A. Product Data:
   1. Pipe
   2. Tracer wire
   3. Pipe fittings
   4. Transition and straight couplings
   5. Concrete mix design for concrete collars, concrete thrust blocks and anchors, and pipe abandonment concrete plugs
   6. Restrained joint fittings

B. Work Plans:
   1. Hydrostatic testing procedures

C. Quality Assurance/Control Submittals:
   1. Certificates: Provide certificates of compliance for all pipe and fittings that they meet the specified requirements prior to delivery and for each product or material provided under this Section 02515.
      a. Identify the pipe and fittings by manufacturer's name, lot number, and date tested by a State-certified materials testing laboratory.

b. Testing: Performed in a State-licensed materials testing laboratory where the testing standards meet or exceed State of California testing standards.

2. Manufacturer's Instructions:
   a. Pipe installation

1.4 QUALITY ASSURANCE

A. Owner must be present during all final connection operations.

1.5 DELIVERY, STORAGE, AND HANDLING

A. Packing, Shipping, Handling, and Unloading: After delivery to the Site, carefully unload all material and protect against breakage
B. Storage and Protection: Protect against breakage rusting, accumulation of foreign matter, disintegration, and injury.

PART 2 PRODUCTS

2.1 GENERAL

A. Pipe: Marked with manufacturer's name, pipe size, cell classification and manufacturer's date code
B. Pipe for tie-ins: No smaller than existing water main to which each tie-in is made and of indicated types

2.2 WATER MAIN PIPE

A. Polyvinyl Chloride (PVC), except where otherwise indicated, in accordance with the following:
   1. PVC Pipe, 8 inch:
      a. AWWA C900, minimum class 150 or as indicated
      b. Bell and spigot end except where otherwise indicated

2.3 WATER MAIN FITTINGS

A. Fittings for PVC Pipe:
   1. Fittings refer to bends
   2. New ductile iron push-on or mechanical joint fittings:
      a. Conform with AWWA C110
      b. Cement mortar lined conforming to AWWA C104
      c. Petroleum asphaltic coating conforming to AWWA C110
      d. Minimum pressure rating 350 PSI
      e. Compatible with type, pressure class, and ends of adjacent pipe used
   3. New compact ductile iron push-on or mechanical joint fittings:
      a. Conform with AWWA C153
      b. Cement mortar lined conforming to AWWA C104
      c. Petroleum asphaltic coating conforming to AWWA C153
      d. AWWA C150 minimum pressure rating of 350 PSI or minimum Class 54 thickness rating
      e. Compatible with type, pressure class, and ends of adjacent pipe used
   4. New gray iron push-on or mechanical joint fittings:
      a. Conform with AWWA C110
      b. Cement mortar lined conforming to AWWA C104
      c. Petroleum asphaltic coating conforming to AWWA C110

d. Minimum pressure rating of 250 PSI
e. Compatible with type, pressure class, and ends of pipe used

5. New ductile iron restrained joint fittings for ductile iron, gray iron, or PVC water mains:
   a. Conforming to applicable requirements of AWWA C111 and C153
   b. Compatible with type, pressure class, and ends of adjacent pipe used
   c. Manufacturers and models:
      1) EBAA Iron: Megalug
      2) Romac: Roma Grip
      3) Or Approved Equal

B. Couplings for water mains:
1. Straight couplings:
   a. Manufacturers and models:
      1) APAC: 300 Series
      2) Powerseal: 3501 Series
      3) Romac: Style 501
      4) Smith-Blair: 441 Series
      5) Or Approved Equal
2. Transition couplings:
   a. Manufacturers and models:
      1) APAC: 300 Series
      2) Powerseal: 3501 Series
      3) Romac: Style 501
      4) Smith-Blair: 441 Series
      5) Or Approved Equal

C. Fittings for tie-ins:
1. No smaller than the existing water main to which each tie-in is made
2. Compatible with type, pressure class, and ends of adjacent pipe used

2.4 TRACER WIRE

A. Number 12 AWG solid copper wire with THHN insulation

2.5 CONCRETE

A. See Section 03000 (Concrete)

2.6 DRAIN ROCK, BEDDING, BACKFILL, AGGREGATE BASE, TEMPORARY AND PERMANENT ASPHALT RESURFACING

A. See Section 02315 (Excavation, Bedding, and Backfill)

2.7 GATE VALVE FOR TEMPORARY BLOWOFF CONNECTION

A. AWWA C509

2.8 TRAFFIC RATED BOX

A. CalTrans No. 3 ½ T H/20 traffic rated box with steel bolt-down cover as manufactured by:
1. Christ: B1017
2. Brooks: 36 PB
3. BES: C1017
4. Or Approved Equal

PART 3 EXECUTION

3.1 GENERAL

A. Contractor is prohibited from operating gate valves or fire hydrants on Owner's system.

3.2 PROTECTION

A. Prevent trench water or any other foreign material from entering the water main.

3.3 TRENCH EXCAVATION

A. See Section 02315 (Excavation, Bedding, and Backfill)

3.4 PIPE BEDDING, BACKFILL, AGGREGATE BASE, AND ASPHALT RESURFACING

A. See Section 02315 (Excavation, Bedding, and Backfill)

3.5 PIPE INSTALLATION

A. General:
   1. Carefully lower pipe, fittings, and valves into trench in such a manner as to prevent damage to pipe coatings. Under no circumstances shall pipe or accessories be dropped or dumped into the trench.
   2. Before lowering and while suspended, inspect pipe for defects and ring ductile iron pipe with a light hammer to detect cracks. Reject any defective, damaged, or unsound pipe and provide sound material.
   3. Cut pipe for inserting valves, fittings, or closure pieces in a neat manner without damage to pipe following pipe manufacturer's written instructions and/or written recommendations.
   4. Store all pipe stockpiled on Site with the ends covered to prevent the entrance of foreign matter.
   5. At times when pipe laying is not in progress, close open ends of pipe that has been laid with a mechanical plug or other means approved by Owner.
   6. When it is necessary to avoid obstructions or when long radius curves are permitted, the amount of deflection shall not exceed the maximum recommended by the pipe manufacturer.
   7. Remove any visible evidence of contamination, dirt, and foreign material from inside and outside of each length of pipe before pipe is lowered into position in the trench. Keep pipe clean both during and after laying, in accordance with AWWA C651.
   8. Excavations:
      a. Match depth of existing pipes.
   9. Make tie-in grade adjustments with elbows, ductile iron pipe, and concrete anchor and thrust blocking.

B. PVC Pipe:
   1. Join individual pieces of pipe and fittings by placing the rubber rings on the machined ends of the pipe and pulling the couplings or fittings in accordance with the manufacturer's written instructions and/or written recommendations.
   2. Check rings to ensure proper position and seating after the coupling is in place.
   3. Utilize adapters for connections as required by the manufacturer.
   4. Fittings for PVC pipe: Mechanical joint type or push-on type.
   5. Install pipe as indicated and in accordance with the manufacturer's written instructions and/or written recommendations.

C. Restrained Joints: Restrained joints may be substituted for the thrust blocking and tie-backs if installed in accordance with the manufacturer's written instructions and/or written recommendations.

3.6 TRAFFIC RATED BOX

A. Install flush with surface with an 8-inch wide by 12-inch deep concrete collar.
   1. Top of collar, non-paved areas: Flush with top of box.
   2. Top of collar, paved areas: 2 inches below surface with asphalt placed over collar to edge of box.

3.7 TRACER WIRE

A. Lay on top of and along the entire length of all non-metallic water mains.
B. Extend to the surface at wiring traffic boxes long enough for locator equipment to be attached.
C. Fasten tracer wire to top of pipe with duct tape at approximately 10-foot intervals.

3.8 CONCRETE THRUST BLOCKS

A. Concrete thrust blocks:
   1. Except for restrained joint systems, bends shall be provided with thrust blocks as indicated.

3.9 CONCRETE

A. See Section 03000 (Concrete)

3.10 HYDROSTATIC TEST

A. Contractor, at its option, may test the line at any time during construction. Final test for acceptance shall be made only after all backfill is in place.
B. Subject each section of pipe, or combined sections, as approved by Owner, to a hydrostatic pressure of not less than 50 psi above working pressure, and not less than 150 psi, at any point on the main.
C. Duration of each pressure test: Minimum of 30 minutes.
D. Hydrostatic test procedure:
   1. Provide blocking at the ends of pipeline to withstand test pressure.
   2. Provide temporary 2 inch diameter gate-valved blow offs at ends of new water main.
   3. Slowly fill the pipe with water and apply the specified test pressure by means of a pump connected to the pipe in an Owner approved manner.
   4. Furnish pump, pipe connection, and all necessary apparatus except gauge and measuring device.
   5. Furnish a calibrated pressure gauge in order to determine test pressure and quantity of water leakage. Gauge shall have been calibrated at least one week prior to test.
   6. Before applying the test pressure, expel all air from the pipe.
   7. Owner will designate time the tests will be made.
   8. The test shall be observed by Owner.
   9. Leakage is defined as the quantity of water to be supplied into the newly laid pipe necessary to maintain the specified leakage test pressure after the pipe has been filled with water and the air expelled.
      a. No pipe installation will be accepted until and unless this leakage is less than 40 US gallons per 24 hours, per mile of pipe, per inch nominal diameter of pipe.

b. Should any test of pipe laid disclose leakage greater than the specified limit, locate the cause and repair the defect until the leakage is within the specified allowance, at Contractor's expense.

10. Repair leaks as directed by Owner regardless of hydrostatic test results.

3.11 CLEANING AND FLUSHING NEW WATER MAINS AND APPURTENANCES

A. Clean and flush the water mains.
B. Flushing water shall be discharged to the wastewater pond to the West of the pipeline.

3.12 FINAL CONNECTIONS

A. General:
   1. Following approval by Owner, and following receipt of Owner authorization to proceed, make final connections under inspection by Owner.
   2. Provide all excavation, shoring, backfill, and trench resurfacing for connections as indicated and specified.
B. Disturbed joints: Replace any disturbed joint on an existing water pipe or as directed by Owner.

3.13 REMOVAL AND ABANDONMENT OF EXISTING WATER PIPE AND WATER SERVICES

A. Water pipe:
   1. Abandon water mains by plugging ends with concrete 2 feet into the pipe.
   2. Prior to abandoning water mains, transfer all water services to new or existing mains.
   3. Push on fittings:
      a. Remove the bend and any concrete thrust block and/or anchor.

END OF SECTION

SECTION 02535

SANITARY SEWERAGE SYSTEMS

PART 1 GENERAL

1.1 SUMMARY

A. Section Includes:
   1. Sewer pipe and appurtenant Work
   2. Testing of pipe

B. Related Sections:
   1. Section 02240 (Dewatering)
   2. Section 02255 (Shoring)
   3. Section 02315 (Excavation, Bedding, and Backfill)
   4. Section 02536 (Manholes, Cleanouts, and Covers)

1.2 REFERENCES

A.	ASTM D3034	Type PSM Poly(Vinyl Chloride) (PVC) Sewer Pipe and Fittings
B.	ASTM D3212	Joints for Drain and Sewer Plastic Pipes Using Flexible Elastomeric Seals
C.	ASTM F477	Elastomeric Seals (Gaskets) for Joining Plastic Pipe
D.	ASTM F1336	PVC Gasketed Sewer Fittings
E.	Greenbook 500-1.1.4	Cleaning and Preliminary Inspection
F.	Sonoma County Water Agency (SCWA) Design and Construction Standards for Sanitation Facilities Drawing No. 100-A	Manhole Sanitary Sewer
G.	SCWA Design and Construction Standards for Sanitation Facilities Drawing No. 109	Pipe Crossing Detail for Sewer and Water
H.	SCWA Design and Construction Standards for Sanitation Facilities Drawing No. 110	Pipe-Structure Crossing Detail Sanitary Sewer
I.	SCWA Design and Construction Standards for Sanitation Facilities Drawing No. 116	Air Test – Allowable Leakage Sanitary Sewer

1.3 DEFINITIONS

A. CDPH: California Department of Public Health

1.4 SUBMITTALS

A. Product Data:
   1. Pipe
   2. Mandrels and proving rings for pipe to be installed; include base I.D. calculation
   3. Flexible couplings
   4. Flexible rubber couplings
   5. Expanding-type grout

6. Underground warning tape

B. Plans:
1. Pipeline testing procedures.
2. Method of placement and support of existing utilities.

C. Quality Assurance/Control Submittals:
1. Certificate that all materials furnished comply with Contract Documents.
2. Manufacturer's written instructions:
   a. Pipe installation
   b. Coupling installation
   c. Flexible coupling installation
   d. Handling of pipe

1.5 DELIVERY, STORAGE, AND HANDLING

A. Pipe:
1. Handle pipe in accordance with manufacturer's written instructions.
   a. Provide and use proper implements, tools, and facilities for the safe and proper handling and protection of the pipe.
   b. Handle pipe in such a manner as to avoid damage to the pipe material or any coating and especially to the ends.
2. Store pipe in a safe location and protect from the elements where damage may result from exposure.
3. Take care to keep from damaging the pipe by heavy loads.
4. Replace all damaged pipe. Repairs will not be acceptable.

B. Storage and Protection:
1. Pipe:
   a. Protect pipe placed along the pipeline route behind barricades to prevent damage to pipe or injury to workers or public.
   b. Store pipe in a safe location out of the traveled way behind barricades.

PART 2 PRODUCTS

2.1 GENERAL

A. Mark all pipe with manufacturer's name, pipe size, standard dimension ratio (SDR) class, cell classification, and manufacturer's date code.

B. Indicated metric dimensions are approximate equivalents for U.S. standard dimensioned industry-available products.

C. Comply with SCWA Design and Construction Standards for Sanitation Facilities.

2.2 MATERIALS

A. Pipe:
1. PVC Pipe Manufacturers:
   a. PW Eagle Inc.
   b. J-M Manufacturing Company, Inc.
   c. Diamond Plastics Corporation
   d. Or Approved Equal
2. Unclassified plastic gravity sewer pipe with integral wall, bell and spigot joints for the conveyance of domestic sewage.

3. Pipe and fittings:
    a. In accordance with requirements
    b. Meet wall and strength minimums of SDR 26, SDR 35, and ASTM D3034.
4. Pipe dimensions: Conform to ASTM D3034 Table 1.

B. Joints:
1. Sewer pipe and fittings: Bell and spigot type joints with elastomeric sealing rings all in conformance with ASTM D3212, ASTM F477, ASTM F1336.
2. No solvent cement joints will be permitted.

C. Couplings:
1. Manufacturers:
    a. APAC 300 series
    b. Powerseal 3500 series
    c. Romac 500 series
    d. Smith-Blair 441 series
    e. Or Approved Equal
2. Size: Compatible with the outside diameter of the pipes on which the coupling is installed.
3. All buried bolts: 316 stainless steel.
4. Lengths for flexible couplings: Standard length.

D. Flexible Rubber and Transition Couplings:
1. Manufacturers:
    a. Fernco
    b. Indiana Seal
    c. Mission Clay
    d. Or Approved Equal
2. Type 316 stainless steel bands
3. Type 316 stainless steel shear rings

E. Eccentric Transition Couplings:
1. Manufacturers:
    a. Fernco: Model No. 1002-68EB
    b. Multi Fittings: SDR 35 PVC eccentric reducer
    c. Or Approved Equal

2.3 BEDDING AND BACKFILL MATERIALS

A. See Section 02315 (Excavation, Bedding, and Backfill)

PART 3 EXECUTION

3.1 GENERAL

A. Comply with SCWA Design and Construction Standards for Sanitation Facilities.

3.2 TRENCHING

A. See Section 02255 (Shoring)
B. See Section 02315 (Excavation, Bedding, and Backfill)

3.3 PIPE INSTALLATION

A. In accordance with requirements, manufacturer's written instructions, as specified herein, and as indicated.

B. Lay all pipe continuously upgrade, with bell of pipe forward.
   1. Lay each length of pipe on firm bed, with true bearing for its entire length between bell holes.
   2. As pipe laying proceeds, excavate bell holes at each joint to facilitate the jointing operations and only to sufficient size for that purpose.
      a. In order that bell holes may be properly located, excavate not more than six bell holes ahead of actual pipe laying.
      b. Excavate bell holes so that pipe, when laid, will have a uniform bearing under the full length of the pipe to a width of at least sixty percent of the internal diameter of the pipe.
C. Lay pipe accurately to lines and grades as indicated.
   1. Carefully center pipe so that, when laid, it will form a sewer with a uniform invert.
   2. Keep trenches water-free and as dry as possible during bedding, laying, and jointing until backfilled, in accordance with Section 02240 (Dewatering).
D. As the Work progresses, clean the interior of the sewer of all dirt and debris. At times when Work is not in progress, close open ends of pipe and fittings.
E. Carefully install pipe to prevent damage. Under no circumstances shall pipe be dropped or dumped.
F. Cut pipe for inserting fittings, closure pieces, and as otherwise required, without damaging the pipe or lining. Leave a smooth end at right angles to the axis of the pipe. Dress cut ends of push-on joint pipe by beveling, in accordance with the coupling manufacturer's written instructions.
G. Install magnetic detectable conductor, warning tape, brightly colored plastic covering, imprinted with "Sewer" in large letters after a depth of 12" of backfill has been placed over pipe.
H. For sewer pipe within 4 to 10 feet clear horizontally of water mains provide sewer pipe conforming to ASTM D3034 PVC pipe, or Approved Equal, in accordance with CDPH "Criteria for Separation of Water Mains and Sanitary Sewers."
I. When crossing water line or storm drain, install in accordance with SCWA Design and Construction Standards for Sanitation Facilities, Drawing Nos. 109 and 110, respectively. Clearance, pipe type, and joint location: Meet or exceed Title 22 requirements.

3.4 COUPLINGS

A. Wrap all couplings with two layers of coal tar based tape, minimum 10 mils thickness.
B. Use flexible couplings to attach pipes of different materials and different outside diameters.

3.5 MANHOLE CONNECTIONS

A. See Section 02536 (Manholes, Cleanouts, and Covers)

3.6 CLEANING

A. Keep pipe clean at all times during the installation.
   1. After all pipe is to grade and is complete, flush and ball pipe progressively downstream to clean out any accumulated debris.
   2. If any sections are dug out subsequent to flushing and balling, where debris could enter the line, flush and ball the line again through the section disturbed.
B. All water used for cleaning may be discharged into downstream sewer manhole. If water used for cleaning is not discharged into downstream sewer manhole, dispose in accordance with all applicable federal, state, and local regulations.

C. Remove all internal debris from the sewer line in accordance with Greenbook 500-1.1.4.
   1. Remove debris from the collection system at the downstream manhole, unless otherwise allowed by Owner.
   2. No material shall be allowed to move downstream in the collection system.

3.7 SANITARY SEWER LATERAL AND CLEANOUT

A. Laterals: 4”
B. Connect to existing lateral as indicated.

3.8 TESTING

A. General:
   1. In accordance with SCWA Design and Construction Standards Drawing No. 116.
   2. Thoroughly clean the interior of all pipes of all adhering matter and other debris. No testing of any pipe shall be started until the cleaning is complete and approved by Owner.
   3. Place backfill to the surface and test the pipe.
   4. Furnish all necessary personnel, water, supplies, equipment, bulkheads, and whatever additional equipment is required to make any and all tests specified.
   5. Place all bulkheads, thrust blocks, anchors, temporary connections, and pumps before furnishing notification of readiness to Owner.
   6. Notify Owner in writing of readiness to test a pipe or portion of pipe a minimum of 1 Business Day in advance.
   7. Test pipes between manholes with low-pressure air.
      a. Safety requires a regulator or relief valve on pressurizing equipment, set at 8 psig.
      b. No one shall be allowed in manholes while there is air pressure against test plugs.
      c. Plug all pipe outlets to resist test pressure.
      d. When the prevailing groundwater is above the sewer being tested, increase air pressure 0.43 psi for each 12” the water table is above the flow line of the sewer.
      e. Laterals shall be considered part of the line to which they are connected and no adjustment of test time shall be allowed to compensate for the smaller diameter of the laterals.
      f. Slowly supply air into the line until test pressure of 6.5 psig is attained. Allow at least 5 minutes for air temperature in the test section to stabilize.
      g. Re-establish the test pressure, and start a stopwatch. Determine the time required for pressure to drop 0.5 psi.
      h. If the pressure does not drop during the stabilization period, and no additional air has been added, the section undergoing the test will have passed without further testing.
   8. After testing, flush or blow out all pipes and leave clean. Do not flush or blow debris out into existing sewers.
      a. Repeat testing until the pipes pass all tests. Repeat testing at Contractor’s expense.
      b. When a combination of more than one pipe size is under test, the calculated time for the larger pipe shall apply.

END OF SECTION

SECTION 02536

MANHOLES, CLEANOUTS, AND COVERS

PART 1 GENERAL

1.1 SUMMARY

A. Related Sections:
   1. Section 02240 (Dewatering)
   2. Section 02315 (Excavation, Bedding, and Backfill)

1.2 REFERENCES

A. Sonoma County Water Agency Design and Construction Standards for Sanitation Facilities (SCWA Sanitation Standards) Drawing No. 118B	Sanitary Sewer - Three Stage Sand and Grease Interceptor
B. SCWA Sanitation Standards Drawing No. 119	Sanitary Sewer Monitoring/Sampling Box

1.3 SUBMITTALS

A. Product Data:
   1. Information on manhole, manhole frames and covers, mainline cleanout frames and covers materials, mainline cleanout plugs, manhole pipe connectors, component construction, features, configuration, and dimensions.
   2. Sewer lateral cleanout boxes and plugs.
   3. Concrete materials.
   4. Manhole interior and pipe connection patch materials.
B. Shop Drawings: Manhole and location, manhole number, elevations, horizontal orientation, connectors, piping sizes, and elevations of penetrations.
C. Quality Assurance/Control Submittals:
   1. Design Data: Concrete mix design including admixtures.
   2. Manufacturer's Recommendations: Manufacturer's written recommendations for manhole joint priming agent and sealing compound if applicable.

PART 2 PRODUCTS

2.1 MANHOLE COMPONENTS MANUFACTURERS

A. Cover and Frame: In accordance with SCWA Sanitation Standards
B. Manhole Connectors: In accordance with SCWA Sanitation Standards
C. Manhole Joint Plasticized Asphaltic Sealing Compound: In accordance with SCWA Sanitation Standards

2.2 PRECAST MANHOLE CONFIGURATION

A. Sanitary Sewer Monitoring/Sampling Box: SCWA Sanitation Standards Drawing No. 119

2.3 PRECAST MANHOLE MATERIALS AND COMPONENTS

A. Manhole Sections: In accordance with SCWA Sanitation Standards
   1. Reinforced precast concrete
   2. Type V cement for sewer manholes
   3. Designed for H-20 loading and an earth unit weight of 77 kg/cu m (130 lb/cu ft).
B. Precast bases: In accordance with SCWA Sanitation Standards.
   1. Manufacturers:
      a. Cook Concrete Products, Inc.
      b. Central Precast Concrete, Inc.
C. Cover and Frame: In accordance with SCWA Sanitation Standards

2.4 4-INCH LATERAL CLEANOUT BOX AND CLEANOUT PLUG

A. Cleanout box: In accordance with SCWA Sanitation Standards.
B. Cleanout plug: In accordance with SCWA Sanitation Standards.

2.5 MANHOLE INTERIOR AND PIPE CONNECTION PATCH MATERIALS

A. In accordance with SCWA Sanitation Standards.
B. Non-Shrink grout: High-strength mortar or grout that does not shrink in the plastic state, is dimensionally stable in the hardened state, and bonds permanently to a clean concrete substrate.

2.6 DRAIN ROCK, STRUCTURAL BEDDING, AGGREGATE TRENCH BACKFILL, CONTROLLED DENSITY FILL, CONCRETE, AGGREGATE BASE, TEMPORARY AND PERMANENT ASPHALT RESURFACING MATERIALS

A. In accordance with SCWA Sanitation Standards.
B. In accordance with Section 02315 (Excavation, Bedding, and Backfill).

PART 3 EXECUTION

3.1 GENERAL INSTALLATION

A. Construct manholes in accordance with SCWA Sanitation Standards.

3.2 EXCAVATION FOR MANHOLES

A. See Section 02315 (Excavation, Bedding, and Backfill)

3.3 MANHOLE SUBGRADE

A. Pump groundwater down to below installation levels just prior to placing precast manhole base in accordance with Section 02240 (Dewatering).
B. Remove loose material from bottom of manhole excavation after leveling the bottom.
C. Place and compact, to 95% Relative Compaction, a 6-inch thick cushion of drain rock, extended 6 inches minimum beyond outside edges of base.

3.4 MANHOLE INVERT

A. Construct precast bases, as indicated.
B. Construct manhole inverts and benches as indicated and with smooth transitions to ensure an unobstructed flow through manhole.
C. Remove sharp edges or rough sections.
D. Trowel mortar surfaces smooth.

E. Bring inner base section in the manhole up to the top of the pipes and round at sewer channels.
F. Slope benches back up to the walls with a slope of at least 2 inches per foot.

3.5 MANHOLE AND FRAME AND COVER CONSTRUCTION

A. Install manhole in accordance with SCWA Sanitation Standards.
B. Set bottom barrels and bottom of cones in a pre-formed lip section with asphaltic sealant to make a watertight joint.
C. Set grade rings in mortar at top of cone and between rings.
D. Install frames and covers on top of manholes to prevent all infiltration of surface or groundwater into manholes.
   1. Set manhole cover approximately 1/8 inch above the surrounding grade so that water does not run toward the manhole but runs away from the manhole to the extent of the surrounding concrete ring.
   2. The area around the manhole ring shall not be subject to any flooding during rainfall.
E. Set frame and cover to match finish street grade or slope so that vehicle traffic is not subjected to impact or vibration in driving over manhole rim of cover.
F. Install temporary watertight pipe plugs at the manholes for pipe testing purposes.

3.6 MANHOLE PIPE CONNECTIONS

A. Method of connecting pipe to the manhole: In accordance with SCWA Sanitation Standards.

3.7 FIELD QUALITY CONTROL

A. Manhole Testing: In accordance with SCWA Sanitation Standards.
   1. Manholes and appurtenances: Watertight and free from infiltration and exfiltration.
   2. Conduct a vacuum-type or water-type leakage test on each manhole following completed construction and after backfilling and compaction of all fill material.
   3. Vacuum Test:
      1) Joints: Grout prior to testing.
      2) Plug pipes entering or exiting the manholes.
      3) Connect the testing device to the manhole in accordance with the device manufacturer's recommendations.
      4) Draw a vacuum of 10 inches Hg (34 kPa) and shut off the vacuum pump.
         (a) Measure the length of time for the vacuum to drop to 9 inches Hg (30.5 kPa).
         (b) If the time is greater than 75 seconds, the manhole passes the vacuum test.
   b. Water Test: Conduct per SCWA Sanitation Standards Drawing No. 100-A
   4. Promptly repair and retest any manhole that fails the above tests, at no additional cost to Owner.

END OF SECTION

SECTION 02725

AGGREGATE BASE

PART 1 GENERAL

1.1 SUMMARY

A. Section includes:
   1. Application of aggregate base course for paving and trench backfill inside and outside the building.

B. Related Sections:
   1. Section 02315 (Excavation, Bedding, and Backfill)

1.2 REFERENCES

A. Caltrans 26	Aggregate Bases
B. California Test 216	Method of Test for Relative Compaction of Untreated and Treated Soils and Aggregates
C. California Test 231	Method of Test for Relative Compaction of Untreated and Treated Soils and Aggregates by the Area Concept Utilizing Nuclear Gauges

1.3 SUBMITTALS

A. Quality Assurance/Control Submittals:
   1. Test Reports:
      a. Sieve analysis: Caltrans 26
      b. Sand Equivalency: Caltrans 26
      c. Resistance (R-value): Caltrans 26
      d. Durability Index: Caltrans 26
      e. Gradation test results: Caltrans 26

B. Quality Assurance/Control Submittals:
   1. Certificates:
      a. Certificate of specification conformance

PART 2 PRODUCTS

2.1 MATERIALS

A. Aggregate Base: Class II, ¾ inch maximum and conform to the requirements for Class II Aggregate Base, as described in Caltrans 26, except that minimum sand equivalent shall be 30.

2.2 SOURCE QUALITY CONTROL

A. Test the following per Caltrans 26:
   1. Gradation
   2. Sand equivalency
   3. Resistance (R-value)
   4. Durability Index

PART 3 EXECUTION

3.1 PLACEMENT AND COMPACTION OF AGGREGATE BASE

A. Place in accordance with Caltrans 26 and compact to at least 95 percent relative compaction per California Test 216 and California Test 231
B. The aggregate base shall be placed in accordance with Caltrans 26 and compacted to at least 95 percent relative compaction.
C. See Section 02315 (Excavation, Bedding, and Backfill) for placement and compaction of utility structure bedding and backfill.

3.2 CONSTRUCTION

A. Place aggregate base course as indicated.

3.3 FIELD QUALITY CONTROL

A. Owner will test compaction of aggregate base in place according to California Test 231.

END OF SECTION

SECTION 02745

ASPHALT PAVEMENT

PART 1 GENERAL

1.1 SUMMARY

A. Section Includes:
   1. New asphaltic concrete paving and overlay.
   2. Trench patching.

1.2 REFERENCES

A.	Caltrans 19	Caltrans Standard Specification for Earthwork
B.	Caltrans 26	Caltrans Standard Specification for Aggregate Bases
C.	Caltrans 39	Caltrans Standard Specification for Asphalt Concrete
D.	Caltrans 92	Caltrans Standard Specification for Asphalts
E.	Caltrans 94	Caltrans Standard Specification for Asphaltic Emulsions
F.	Caltrans 93	Liquid Asphalts
G.	California Test 304	Method of Preparation of Bituminous Mixtures for Testing

1.3 SUBMITTALS

A. Product Data:
   1. Acknowledgement that products submitted meet requirements of standards referenced.
   2. Asphalt design mix
B. Quality Assurance/Control Submittals:
   1. Certificates:
      a. Submit certificates of compliance from the supplier for bituminous materials for prime coat, paint binder (tack coat), and asphaltic concrete.

1.4 QUALITY ASSURANCE

A. Regulatory Requirements:
   1. ADA
   2. CCR Title 24

1.5 DELIVERY, STORAGE, AND HANDLING

A. In accordance with Caltrans 93.
B. Deliver asphaltic concrete using a method suitable to maintain the specified spreading temperature.

PART 2 PRODUCTS

2.1 MATERIALS

A. Asphaltic Concrete: Type B (1/2 inch maximum aggregate size, medium gradation) per Caltrans 39.
   1. Paint Binder (Tack Coat): Anionic Emulsion, slow setting, SS-1 in accordance with Caltrans 94.
   2. Paving Asphalt: Steam-refined, penetration grade PG 62-16, in accordance with Caltrans 92.

3. Aggregate: Coarse and fine aggregate, clean and free from decomposed materials, vegetable matter, and other deleterious substances; Type A, with the grading of the combined aggregate conforming to the 1/2 inch maximum size, medium grading, as listed in Caltrans 39.

B. Emulsified Asphalt: Per Caltrans 94.

2.2 MIXES

A. Comply with mix design category PG 64-16, Caltrans 92.

2.3 MIXING

A. In accordance with Caltrans 39.

PART 3 EXECUTION

3.1 GENERAL

A. Adjust existing manholes, valve boxes, utility boxes, and other surface utilities located within the paving limits to finish grade.
B. Asphalt pavement: in accordance with Caltrans 37, Caltrans 39, and Caltrans 94.

3.2 INSTALLATION

A. Construct to line, grade, and section as indicated and in accordance with Caltrans 19.
B. Apply layer of emulsified asphalt in accordance with Caltrans 94.
C. Install a compacted layer of patch asphaltic concrete for overlay portion, as indicated.
D. Install minimum 2″ thick layer, or match existing asphaltic concrete, at all disturbed areas.
E. ADA parking spaces: Install minimum 1″ thick overlay or as needed to meet ADA and CCR Title 24 requirements.
F. Install minimum 1″ thick overlay in paved areas to match grading plan. Grind as necessary to maintain 1″ thickness.
G. Tolerance of Finished Grade: ± 0.10 foot from required elevations.
H. Installation tolerance shall not exceed 0.02 feet from finished grade of existing elevations.
I. Ensure traffic boxes are flush with new grade.

3.3 ASPHALT CONCRETE SURFACING

A. Paint Binder: Apply to existing asphaltic concrete surfaces and between each lift of new asphaltic concrete and to vertical surfaces in accordance with Caltrans 39.
B. Asphaltic Concrete:
   1. Spread and compact asphalt concrete in accordance with Caltrans 39.
   2. Compact to 95 percent relative compaction per California Test 304.
   3. The finished surface shall be unyielding, true to grade, and free from surface irregularities.
   4. After receiving the final compaction, the finish paving shall have a minimum thickness as specified above and as required to match the adjacent finished surface grade.

3.4 FIELD QUALITY CONTROL

A. Before Final Acceptance, flood the paved areas with water to check drainage and surface irregularities. Replace or overlay high and low spots in an acceptable manner, subject to Owner approval, and water test the paving again after corrections have been made.
B. Replace or repair deficient and damaged asphalt paving.
C. All paving shall drain properly before being accepted.

END OF SECTION

SECTION 02760

PAVEMENT MARKINGS

PART 1 GENERAL

1.1 SUMMARY

A. Section Includes:
   1. Pavement marking and striping for new and existing parking spaces, including new ADA compliant and EV station parking spaces.

1.2 SUBMITTALS

A. Product Data:
   1. Paint
   2. Raised Markers

1.3 QUALITY ASSURANCE

A. Regulatory Requirements:
   1. ADA
   2. CCR Title 24

PART 2 PRODUCTS

2.1 MATERIALS

A. Paint: Sherwin-Williams "Set Fast Dry Latex Traffic Paint" TM226/225, Dunn-Edwards Corp. "Vin-L-Stripe" W 801 or Approved Equal.
B. Raised Markers: Permark Ceramic Pavement Markers. 4” diameter P7-W or Approved Equal.

PART 3 EXECUTION

3.1 PREPARATION

A. Clean Surfaces requiring paint of dirt, grease and oil prior to and within twenty-four hours of painting.
B. Make sure surfaces are dry prior to painting or installation of raised markers.

3.2 INSTALLATION

A. Paint lines clean and sharp so that the finished product reveals an opaque white color with no black showing through.
B. The Contractor shall implement traffic control as required to protect the paint until it dries.
C. Place all markings for ADA compliant parking spaces, including post mounted signs and signs at entrance to parking lots.
D. Install Raised Markers per manufacturer’s recommendations.

END OF SECTION

SECTION 02821

CHAIN LINK FENCE AND GATES

PART 1 GENERAL

1.1 REFERENCES

A.	ASTM A121	Standard Specification for Metallic-Coated Carbon Steel Barbed Wire
B.	ASTM A153	Standard Specification for Zinc Coating (Hot-Dip) on Iron and Steel Hardware
C.	ASTM A392	Standard Specification for Zinc-Coated Steel Chain-Link Fence Fabric
D.	ASTM F552	Terminology Relating to Chain-Link Fencing
E.	ASTM F567	Standard Practice for Installation of Chain Link Fence
F.	ASTM F626	Standard Specification for Fence Fittings
G.	ASTM F1043	Standard Specification for Strength and Protective Coatings on Metal Industrial Chain Link Fence Framework
H.	ASTM F1083	Standard Specification for Pipe, Steel, Hot-Dipped Zinc-Coated (Galvanized) Welded, for Fence Structures

1.2 SUBMITTALS

A. Product Data:
   1. Chain link fence and gates
   2. Acknowledgement that products submitted meet requirements of standards referenced.
B. Quality Assurance/Control Submittals:
   1. Certificates:
      a. Mill Certificates
      b. Welder's certificates
   2. Test Reports:
      a. Source quality control test results
   3. Manufacturer's Instructions:
      a. Chain link fence and gate installation

1.3 QUALITY ASSURANCE

A. Utilize only AWS certified welders.

1.4 DEFINITIONS

A. See ASTM F552.
B. NPS: Nominal pipe size, in inches.
C. Installer or Applicator: Installer or applicator is the person actually installing or applying the product in the field at the Site.
   1. Installer and applicator are synonymous.

PART 2 PRODUCTS

2.1 ACCEPTABLE MANUFACTURERS

A. Subject to compliance with the Contract Documents, the following manufacturers are acceptable:

1. Fence systems:
    a. Cyclone
    b. Page-Wilson Corporation (Page Fence Division)
    c. Anchor Fence, Inc.
    d. Or Approved Equal

2.2 COMPONENTS

A. Chain Link Fabric:
    1. Fabric type:
        a. ASTM A392 zinc-coated steel:
            1) Coated after weaving, 1.2 ounces per square foot
    2. Wire gage: 9
    3. Mesh size: 2 inch
    4. Selvage treatment:
        a. Top: Knuckled
        b. Bottom: Knuckled
B. Concrete: See Section 03300 (Concrete).
C. Gate Posts:
    1. ASTM F1083 pipe:
        a. Schedule 40, NPS, 4" outside diameter 8.65 pounds per lineal foot
D. Gate Fittings (Post and Line Caps, Rail and Brace Ends, Sleeves-Top Rail, Tie Wires and Clips, Tension and Brace Bands, Tension Bars, Truss Rods):
    1. ASTM F626
    2. Hardware:
        a. Galvanized per ASTM A153
        b. Hinges to permit 180-degree outward gate opening
E. Barbed Wire:
    1. ASTM A121 zinc-coated steel: Class 3, 0.8 ounces per square foot
    2. $6mm^2$ 12.5 GA, three strand steel wire
    3. $3mm^2$ 14 GA, 4-point barbs at 3 IN spacing
    4. Provide sharp barbs tightly wrapped around uniformly twisted $6mm^2$ 12.5 GA wires
    5. Provide extension arm on each post designed to support barbed wire.

2.3 SOURCE QUALITY CONTROL

A. Test related fence construction materials to meet the following standards:
    1. Posts and rails:
        a. ASTM F1043, Heavy Industrial

PART 3 EXECUTION

3.1 INSTALLATION

A. Install in accordance with:
    1. Manufacturer's instructions.
    2. Lines and grades as indicated.
    3. ASTM F567.
B. Do not start fence installation before final grading is complete and finish elevations are established.
C. Drill holes in firm, undisturbed or compacted soil.

D. Place fence with bottom edge of fabric at maximum clearance above grade. Correct minor irregularities in earth to maintain maximum clearance.
E. Install tension bars full height of fabric.
F. Pull fabric taut and secure to posts and rails.
    1. Secure so that fabric remains in tension after pulling force is released.
    2. Secure to posts at not over 15 inches on center, and to rails at not over 24 inches on center, and to tension wire at not over 24 inches on center.
    3. Use U-shaped wire conforming to diameter of pipe to which attached, clasping pipe and fabric firmly with ends twisted at least two full turns.
    4. Bend ends of wire to minimize hazards to persons or clothing.
    5. Install post top at each post.
    6. Install extension arms and barbed wire.
    7. Gates:
        a. Construct with fittings or by welding
        b. Provide rigid, weatherproof joints
        c. Ensure right, non-sagging, non-twisting gate
        d. Coat welds with rust preventive paint, color to match pipe
        e. Adjust gates as required so that they operate smoothly

END OF SECTION

DIVISION 3

CONCRETE

SECTION 03100

CONCRETE FORMWORK

PART 1 GENERAL

1.1 SUMMARY

A. Section Includes:
   1. Forming, shoring, and bracing for all cast-in-place concrete, including form liners, ties, bar supports, other accessories and embedded items.

1.2 REFERENCES

A. ACI 347 Recommended Practice for Concrete Form Work

1.3 SUBMITTALS

A. Product Data:
   1. Alternate or non-standard form surface materials

1.4 RESPONSIBILITY

A. Contractor shall be solely responsible for forms, form adequacy, and form safety.

PART 2 PRODUCTS

2.1 FORM MATERIALS

A. Form Facing Materials
   1. For surfaces permanently not exposed to view, no selected form facing materials are required.
   2. All other surfaces shall be formed with materials as required to produce a smooth, hard uniform texture on the concrete. Material may be plywood, tempered concrete, form-grade hardboard, metal, plastic, paper or other approved material capable of producing the desired finish. Material with raised grain, dents, torn surfaces, worn edges, patches or other defects which will impair the texture of the concrete surface shall not be used. Minimum required form facing material:
      a. Slab on grade edges: Nominal 2" thick surfaced lumber
      b. All other surfaces: 5/8" thick APA B-B "Plyform" plywood

2.2 FORM SEALER

A. Form sealers shall be applied to all forms to prevent absorption of moisture and prevent bond with the concrete. Form sealers shall be non-staining, and applied in such a manner so as to provide a uniform color and texture to the finished surface.

2.3 FORM ACCESSORIES

A. Form accessories to be partially or wholly embedded in the concrete, such as ties and hangers, shall be of a commercially manufactured type. Nonfabricated wire shall not be used.
B. Form ties shall be constructed so that the ends or end fasteners can be removed without causing spalling at the faces of the concrete.

C. When forms are removed, embedded portions of the ties shall terminate from the face of the formed concrete not less than the larger of:
   1. 2 diameters of the form tie
   2. 3/4 inch

2.4 OTHER MATERIALS

A. All other materials, not specifically described but required for proper completion of concrete form work, shall be as selected by the Contractor subject to the advance approval of Owner.

PART 3 EXECUTION

3.1 CONSTRUCTION OF FORMS

A. General:
   1. Construct all forms shall meet the requirements of ACI 347.
   2. Construct all required forms to be substantial, sufficiently tight to prevent leakage of mortar and able to limit deflections of 3/32 inch between studs, joists, form stiffeners, form fasteners or wales when filled with wet concrete.
B. Layout:
   1. Form all cast-in-place and precast concrete to the shapes, sizes, lines, and dimensions indicated.
   2. Make proper provision for all openings, offsets, recesses, anchorage, blocking, and other features of the Work as shown or chamfered edges on exposed corners unless otherwise noted.
   3. Perform all forming required for related work and do all cutting and repairing of forms required to permit such installation.
   4. Temporary openings shall be provided at the base of forms and any other points to facilitate cleaning and observation immediately before concrete is placed. No openings will be permitted on the exterior faces of the structure.
C. Arrangement:
   1. The arrangement of forms and facing material shall be orderly and symmetrical, with the number of seams kept to the practical minimum. Make all panel joints tight butt joints with all edges true and square.
D. Embedded items:
   1. Set all required steel frames, angles, grilles, bolts, inserts, lifting inserts and other items required to be anchored in the concrete before the concrete is placed.
E. Bracing:
   1. Properly brace and tie the forms together so as to maintain position and shape and to ensure safety to personnel.
F. Tolerances:
   1. Construct all forms straight, true, plumb, and square within a tolerance horizontally of one in 200 and a tolerance vertically of one in 500. Floors shall be constructed to the slopes indicated without the presence of "birdbaths" on the completed floor surfaces.
G. Wetting:
   1. Keep forms sufficiently wetted to prevent joints opening up before concrete is placed.
H. Cleaning:
   1. The inside surfaces of forms shall be cleaned of all dirt, mortar, and foreign material. Forms which will later be removed shall be thoroughly coated with form oil prior to placing concrete.

3.2 EARTH FORMS

A. Side forms for footings that will not be exposed to view may be of earth provided the soil will stand without caving and the sides of the bank are made with a neat cut to the minimum dimensions indicated.
B. Make all necessary provisions to prevent cave-ins during placement of concrete.

3.3 RE-USE OF FORMS

A. Re-use of forms shall in no way delay or change the schedule for placement of concrete from the schedule obtainable if all forms were new.
B. Re-use of forms shall in no way impart less structural stability to the forms nor less acceptable appearance to finished concrete.
C. Re-used forms shall have the contact surfaces cleaned thoroughly and those which have been coated shall be given an additional application of the coating.

3.4 REMOVAL OF FORMS

A. Forms shall be removed without damage to the concrete and in a manner to ensure complete safety of the structure.
B. Contractor is responsible for ensuring that adequate concrete strength is attained prior to form removal. The minimum time before removal of forms from walls or the sides of columns shall be 3 days. Sideforms for footings may be removed 36 hours after concrete placement. Slab forms and shores for cantilevered portions of the work shall not be removed before a minimum of 14 days after concrete is placed or until concrete cylinder tests indicate a compressive strength equal to 90 percent of design strength.
C. Remove metal spreader ties on exposed concrete by removing or snapping off inside the wall surface and pointing up and rubbing the resulting pockets to match the surrounding areas. Unless noted otherwise, finish shall match surrounding concrete.

END OF SECTION

SECTION 03200

CONCRETE REINFORCEMENT

PART 1 GENERAL

1.1 SUMMARY

A. Section Includes:
   1. Concrete reinforcement and associated items required for cast-in-place or precast concrete.

1.2 REFERENCES

A.	ASTM A82	Standard Specification for Steel Wire, Plain, for Concrete Reinforcement
B.	ASTM A615	Standard Specification for Deformed and Plain Carbon-Steel Bars for Concrete Reinforcement
C.	ACI 318	Building Code Requirements for Reinforced Concrete
D.	AWS D1	Structural Welding Code - Reinforcing Steel

1.3 SUBMITTALS

A. Product Data:
   1. Epoxy bonding agent
   2. Metal reinforcing supports
B. Shop Drawings:
   1. Concrete reinforcement placement, hook and bend details, splice locations, embedded items, and proposed construction joint locations

PART 2 PRODUCTS

2.1 MATERIALS

A. Deformed bars: ASTM A615, Grade 60 for No. 5 bars and larger, Grade 40 for No. 4 bars and smaller.
B. Wire: ASTM A82.
C. Tie Wires: 19 gage or heavier, black annealed.
D. Metal reinforcing supports: Galvanized or plastic coated.
E. Epoxy Bonding Agent: HIT RE-500 Epoxy as manufactured by Hilti Corp or Approved Equal.

2.2 FABRICATION

A. Fabricate hooks and bends in accordance with the requirements of ACI 318.
B. Do not use bars with kinks or bends not indicated or on the reviewed Shop Drawings.
C. Do not bend or straighten steel in a manner that will injure the material. Heating of the reinforcement will not be permitted.
D. Insofar as is possible, shop-fabricate all rebar. Field bending of bars larger than #5 will not be allowed.

PART 3 EXECUTION

3.1 INSTALLATION

A. Before the start of concrete placement, accurately place all concrete reinforcement, positively securing and supporting by concrete blocks, metal chairs or spacers, or by metal hangers to prevent displacement.

B. Welded wire fabric shall be rolled flat before placing concrete, unless otherwise indicated. Welded wire fabric reinforcement shall be held firmly in place against vertical or transverse movement. Pulling welded wire fabric into position with hooks during concrete placement will not be allowed.

C. Unless noted otherwise, provide the following minimum concrete covering of reinforcement:

1. Concrete, exposed to earth or weather, deposited against forms:
   a. #6 through #8 bars — 2 inches
   b. #5 bar, W31 or D31 wire and smaller — 1 ½ inches
   c. Concrete deposited against earth: — 3 inches
2. Slabs, walls, not exposed to earth or weather:
   a. #14 and #13 bars — 1 ½ inches
   b. #11 bar and smaller — ¾ inch

3.2 SPLICING

A. Splice bars in accordance with the requirements of ACI 318 and as indicated.

B. Wherever possible, stagger splices of adjacent bars.

C. Welded Splices:

1. All welded splices in reinforcing bars shall be full penetration butt welds conforming to the requirements of AWS D1.4.
2. Welded splices shall be used only where indicated.
3. Full time inspection by a Testing Laboratory will be required for all reinforcing steel welds.

3.3 DOWELS

A. Holes in existing concrete for dowels may be either percussion-rotary drilled or diamond cored unless otherwise noted.

B. Bonding agent and dowels shall be installed according to the bonding agent manufacturer's recommendations.

3.4 OBSTRUCTIONS

A. In the event conduits, piping, inserts, sleeves, or any other items interfere with placing reinforcement as indicated or as otherwise required, immediately notify Owner and obtain approval of new procedure before placing concrete.

3.5 CLEANING REINFORCEMENT

A. Steel reinforcement, at the time concrete is placed around it, shall be free from heavy rust, loose mill scale, oil, paint, dirt and all other coatings which may reduce bond between steel and concrete.

END OF SECTION

SECTION 03300

CAST-IN-PLACE CONCRETE

PART 1 GENERAL

1.1 REFERENCES

A. AC1 318	Building Code Requirements for Reinforced Concrete
B. ASTM C31	Standard Practice for Making and Curing Concrete Test Specimens in the Field
C. ASTM C33	Standard Specifications for Concrete Aggregates
D. ASTM C39	Standard Test Methods for Compressive Strength of Cylindrical Concrete Specimens
E. ASTM C42	Standard Test Method for Obtaining and Testing Drilled Cores and Sawed Beams of Concrete.
F. ASTM C94	Standard Specifications for Ready-Mixed Concrete
G. ASTM C143	Standard Test Method for Slump of Hydraulic Cement Concrete
H. ASTM C150	Standard Specifications for Portland Cement
I. ASTM C172	Standard Practice for Sampling Ready-Mixed Concrete
J. ASTM C309	Standard Specifications for Liquid Membrane Forming Compounds for Curing Concrete
K. California Test Method 227-E	Method of Test for Evaluating Cleanliness of Course Aggregate
L. California Test Method 217-I	Method of Test for Sand Equivalent

1.2 SUBMITTALS

A. Product Data:
   1. Curing compound
   2. Admixtures
   3. Non-shrink grout

B. Shop Drawings:
   1. Construction joint location plan

C. Quality Assurance/Control Submittals:
   1. Design Data:
      a. Mix Design: The exact proportions in which materials are to be mixed to produce the various types of concrete shall be determined by an independent testing laboratory employed at Contractor's expense and in accordance with the requirements of ACI 318.
         1) Where historical testing results exist to verify that proposed existing mix designs will achieve desired strengths, such mix designs and back-up test data may be submitted by the Testing Laboratory for review by Owner, including certification of the Testing Laboratory that the mix design conforms to these Specifications.
            (a) The Testing Laboratory shall identify any deviation from the Specification in the proposed mix design and shall certify that such deviation shall not materially affect the quality or character of the concrete to be incorporated into the Work.

2) Limit water/cement ratio for as-placed slab concrete mix to 0.47 maximum.

1.3 INSPECTIONS AND TESTS

A. Special Inspection per CBC Section 1704 is required, except for concrete with 2,000 psi final strength.
B. Formwork and reinforcing steel shall be reviewed by Owner and/or Testing Laboratory prior to placing any concrete.
C. Concrete testing shall be performed as follows:
   1. Test Cylinders:
      a. Each test shall consist of three cylinders made and stored in accordance with ASTM C31 from samples secured at the site in accordance with ASTM C172.
      b. One test shall be made for each 50 cubic yards or fraction thereof of each mix placed each Day. One cylinder of each test shall be tested at 7 Days and one at 28 Days. Testing shall be performed in accordance with ASTM C39. The third cylinder shall be stored for further testing should either of the two tests fail to indicate adequate strength.
      c. The average of any three consecutive 28-day tests made as specified above shall be equal to or greater than the strength specified. Not more than 10% of all cylinders tested shall show 28-day strengths less than the specified strength.
      d. When the concrete tests do not meet the requirements of paragraph 1.3C.1.c above, the mix design of the concrete remaining to be placed shall be modified as directed by Owner at no cost to the Owner.
      e. When concrete tests do not meet the requirements of paragraph 1.3C.1.c above and in the Owner's opinion are such as to indicate that the concrete in place is inadequate to support design loads, Owner may require core tests of the concrete in place, in accordance with ASTM C42 or may order full scale load tests. When such core or load tests indicate an unsafe condition, the concrete shall be replaced or strengthened as directed by Owner. All work shall be performed at the Contractor's expense.
      f. 7-day compressive strengths are to be used as guides to 28-day strengths. In general, 7-day strengths shall be equal to at least 65% of the required 28-day strength. Failure of tests to meet these 7-day strengths may require revision of the mix design as in paragraph 1.3C.1.d above, but shall not require testing or replacement as in paragraph 1.3C.1.e above unless 28-day strengths also fail to meet requirements.
   2. Slump Tests: The testing laboratory shall perform slump tests in accordance with ASTM C143 when cylinders are taken.

PART 2 PRODUCTS

2.1 CONCRETE

A. General:
   1. All materials at the source or batching plant shall be kept protected and separated so as to avoid spoilage, contamination, breakage, or segregation, which might affect the mix design strengths.
   2. All concrete, unless specifically permitted by Owner, shall be transit-mixed in accordance with ASTM C94.

B. Quality:
   1. All concrete shall have the following minimum compressive strengths at 28 days:

Location of Concrete	Min. psi @ 28 days	Max. Size Aggregate	Maximum Slump
Thrust blocks, fence posts & unreinforced encasement	2,000	1 ½"	4"
Footings, Foundations	3,000	1 ½"	4"
Slab on grade and structural slabs	4,000	1″	3"

2.2 MATERIALS

A. Cement: Portland cement conforming to ASTM C150, Type II and the product of one manufacturer; the temperature of cement delivered to the plant shall not exceed 150 degrees F.
B. Aggregates: Conform to ASTM C33, except as follows:
   1. Coarse aggregate shall have a minimum cleanness value of 75 as determined by State of California Test Method 227-E.
   2. Fine aggregate shall have a minimum sand equivalent of 75 as determined by State of California Test Method 217-I.
C. Water: Clean and free from deleterious matter. Water used for curing shall not contain any impurities in sufficient amounts to cause discoloration of the concrete or etching of the surface.
D. Admixtures:
   1. Admixtures may be used, however their use is subject to the advance approval of Owner. Admixtures containing chlorides shall not be used.
   2. Certify that the strength of the concrete containing the proposed admixture (used in accordance with the manufacturer's recommendations) shall be, at the ages of forty-eight hours and longer, not less than that of similar concrete, as specified herein, without the admixtures.
   3. Use of air entrained concrete is subject to the advance approval of Owner.
E. Cement grout: Mix 1 part by volume of portland cement, 1/2 part by volume of water and fine aggregate.
F. Cement dry pack: Mix 1 part by volume of portland cement, 1/2 part by volume of water and fine aggregate sufficient to make a stiff mix.
G. Non-shrink grout: Masterflow-713 as manufactured by Master Builders, Inc. or Approved Equal. Grouting shall be performed in accordance with the manufacturer's directions.
H. Curing membrane: 10 mil sheet plastic in as wide as possible to avoid joints, a combination sheet plastic and paper, or Approved Equal .
I. Jointing material: Cement or tape used for sealing membrane joints shall be only a type recommended by the manufacturer of the membrane being joined.
J. Curing compound: Conform to ASTM C309, non-staining, containing a fugitive dye and compatible with any future coatings to be applied to the concrete surfaces.
K. Sealer/Hardener: Euco Diamond Hard Penetrating Liquid Densifier/Sealer as manufactured by Euclid Chemicals (www.euclidchemical.com) or Approved Equal.

2.3 OTHER MATERIALS

A. All other materials, not specifically described but required for a complete and proper installation, shall be as selected by the Contractor subject to review by Owner.
B. Slab control and construction joint filler material: PAC Polyurea 85A as manufactured by Pacific Polymers (www.pacpoly.com) or Approved Equal. Joint filler material shall be resistant to chemical attack and shall prevent spalling of concrete joint edges from forklift wheel traffic.

PART 3 EXECUTION

3.1 GENERAL

A. Concrete placement shall conform to the provisions of Chapter 5 of ACI 318.

3.2 CLEANING FORMS AND EQUIPMENT

A. Before placing concrete, all equipment for mixing and transporting the concrete and all spaces to be occupied by the concrete shall be thoroughly cleaned, forms shall be coated with an approved form sealer and wetted, and all masonry against which concrete is to be deposited shall be thoroughly wetted. Standing water shall be removed from forms before placing concrete.

3.3 PLACING CONCRETE

A. Method:
   1. Convey concrete from mixer to place of final deposit by methods that will prevent segregation and loss of materials.
   2. For chuting, pumping, and pneumatically conveying concrete, use only equipment of such size and design as to ensure a practically continuous flow of concrete at the delivery end without loss or separation of materials.
   3. Deposit concrete as nearly as possible in its final position to avoid segregation due to rehandling and flowing.
   4. Place concrete as dry as possible consistent with good workmanship, never exceeding the maximum specified slump.
B. Rate of Placement:
   1. Place concrete at such a rate that concrete is at all times plastic and flows readily between bare bars.
   2. When placing is once started, carry it on as a continuous operation until placement of the panel or section is complete.
   3. Do not place a greater area at one time than can be properly finished without checking; this is particularly important during hot or dry weather.
   4. Do not, in any case, place a slab greater than 25 feet in any direction without construction joints.
C. Compaction:
   1. Thoroughly consolidate all concrete by suitable means during placement, working it around all embedded fixtures and into corners of forms.
   2. During placement, thoroughly compact the concrete by hand tamping and by mechanical vibration. Internal vibrators shall have a minimum frequency of 8,000 vibrations per minute and sufficient amplitude to consolidate concrete effectively. Use of vibrators to transport concrete shall not be allowed.
D. Acceptability:

1. Do not use retempered concrete or concrete that has been contaminated by foreign materials.

3.4 CONSTRUCTION JOINTS

A. Contractor shall make and locate saw-cut control joints with maximum spacing as indicated.

3.5 CONCRETE FINISHING

A. Slab Concrete:
   1. Take care that the wet slab meets the screeds accurately and does not rise above or lower below them.
   2. Carefully provide slab depressions as required for the finishes indicated.
   3. Unless otherwise indicated, make all slabs even and uniform in appearance and, where no slope is required, level within plus or minus 1/8 inch in ten feet.
   4. Where floor drains or floor slopes are indicated, slope slabs uniformly to provide even fall for drainage.
   5. Interior slabs: Steel trowel to a smooth, hard finish.
   6. Exterior slabs: Where "broom finish" is indicated and where no other slab finish is indicated, finish the exposed concrete surface by lightly combing with a medium stiff broom after troweling is complete.
B. Formed Surfaces:
   1. Fill all tie holes, depressions, and rock pockets with mortar. Materials used for repair shall closely match color and texture of surrounding concrete.
   2. Remove fins and bulges.
   3. All formed surfaces exposed to view shall have stains and discolorations removed and shall be finished by whatever means necessary to provide uniform color and texture, including abrasive grinding or "sacking" with cement paste.

3.6 CURING CONCRETE

A. All concrete surfaces are to be protected from damage and shall be cured by one of the following methods.
   1. Slab Surfaces:
      a. Immediately upon steel troweling an area, apply a fog mist above the finished concrete surface to produce an appearance of a wet sheen on the surface of the slab. Continue fogging until sheet or liquid membrane has been installed.
      b. Sheet Membrane:
         1) Lap all joints six inches, weight the covering and securely join together so as to achieve a completely sealed membrane over the entire surface.
         2) Maintain the curing membrane in place for a minimum of 10 days after placement of concrete.
      c. Liquid Membrane (curing compound):
         1) Install specified liquid membrane in accordance with the manufacturer's recommendations. Curing compound shall not be used in areas to receive resilient flooring.
         2) Liquid membrane curing compound shall not be used on concrete placed within enclosed buildings.
   2. Other Surfaces:
      a. Other surfaces shall be cured by the forms in place method or the liquid membrane method, above.
      b. Forms in Place Method:

1) Formed surfaces of concrete may be cured by retaining the forms in place. The forms shall remain in place for at least 7 days after the concrete has been placed.
2) All joints in the forms shall be kept moisture tight during the curing period. Cracks shall be resealed as directed by Owner.
3) If the forms are removed prior to 7 days after placement of concrete, curing compound shall be immediately applied to the exposed surfaces.

3.7 SEALER/HARDENER

A. Clean concrete slab surface and install specified sealer/hardener in accordance with the manufacturer's recommendations after concrete has cured for a period of not less than 14 days.
B. Sealer/hardener shall not be installed on any area to receive resilient floor covering.

3.8 SURFACE REPAIRS

A. Inspection:
   1. Immediately after forms and curing membranes have been removed, inspect all concrete surfaces and patch all placement joints, voids, rock pockets, form tie holes, and other imperfections before the concrete is thoroughly dry.
   2. Do not patch until concrete has been reviewed by Owner.
B. Patching:
   1. Minor Patching:
      a. Minor areas to be patched shall be cleaned thoroughly. Curing compound shall be removed from these. Removal of curing compound inadvertently sprayed on reinforcing steel or construction joint areas shall be by sand blasting. If tie hole "cone" areas are sprayed with curing compound, such tie holes shall be lightly reamed prior to patching.
      b. Minor honeycomb or otherwise defective areas shall be saw cut out to solid concrete, but to a depth of not less than one inch. The edges of the cut shall be slightly more than perpendicular to the surface of the concrete so as to form a key.
      c. Material for patching small areas and tie holes shall be cement mortar, as specified herein, so as to match the color of the adjacent concrete. The amount of water used in mixing the patch material shall be as little as is consistent with the requirements of handling and placing.
      d. All surfaces shall be coated with an approved epoxy cement mortar immediately prior to patching and the concrete patch shall be placed before the epoxy cement mortar has set. The epoxy cement mortar shall be mixed and used in accordance with the manufacturer's recommendations.
      e. The patching material shall be thoroughly compacted into place, screeded off as to leave the patch slightly higher than the surrounding surface. It shall then be left undisturbed for a period of one to two hours to permit initial shrinkage before being finally finished. The patch shall be finished in such a manner as to match the adjoining surface. On exposed surfaces, forming material shall be placed over the patch before the mortar has thoroughly hardened and shall be hammered to impress the form texture and match the form making the adjoining surface. Patches shall be kept continuously wet for a period of at least seven days.
   2. Major Patching:
      a. Major defects of large areas involving voids or rock pockets extending beyond the first layer of reinforcing may be cause for rejection of the Work. If, in the opinion of Owner, repairs can be made without adversely affecting the structural integrity of

the Work, the section may be repaired, however, the repair procedure shall be submitted to Owner for review.

b. The reinforcing shall not be cut in the repair and keyways shall be cut into the adjacent sound concrete to securely fasten the patch to the original work. All surfaces shall be coated with an approved epoxy cement mortar immediately prior to patching and the concrete patch shall be placed before the epoxy cement mortar has set.

c. Patching mortar for large repairs shall have a minimum twenty-eight day compressive strength of 3,000 psi or the specified concrete strength, whichever is greater.

END OF SECTION

DIVISION 5

METALS

SECTION 05400

LIGHT GAUGE METAL FRAMING

PART 1 GENERAL

1.1 SUMMARY

A. Section Includes:
   1. Metal framing and furring at exterior and interior walls and partitions including but not necessarily limited to metal studs, trim, and accessories.

1.2 SUBMITTALS

A. Product Data:
   1. Cold-formed framing system components including fasteners and accessories
B. Quality Assurance/Control Submittals:
   1. Certificates:
      a. Manufacturer's certificate that materials meet specification requirements
   2. Manufacturer's Instructions:
      a. Erection instructions containing sequence of operations and requirements for temporary bracing

1.3 QUALITY ASSURANCE

A. Regulatory Requirements: Erect light gauge metal framing to meet requirements for state and local governing codes, including CCR Title 24.
B. Metal studs and furring shall provide plumb, true, straight and rigid framing for support of related materials.

1.4 DELIVERY, STORAGE, AND HANDLING

A. Deliver and store materials in original packages, containers or bundles bearing brand names and names of manufacturers or suppliers for whom products are manufactured with seals unbroken and labels intact until time of use.

1.5 SEQUENCING

A. Schedule all Work to coordinate with the required observations, tests and inspections.
B. Cooperate and coordinate Work with the Work of others to produce a result satisfactory to Owner.

PART 2 PRODUCTS

2.1 MATERIALS

A. Acceptable Manufacturers.
   1. Western Metal Lath
   2. Angeles Metal Systems
   3. USG
   4. Or Approved Equal
B. All metal studs, track, and connections shall be of the type and size indicated.
   1. All metal studs shall be primed with rust resistant primer or galvanized.
   2. Provide metal studs as required for load bearing, non-load bearing and wind loads.

3. Provide punched or screwable studs as required for the types of finishes that shall be applied to them and provide for piping and conduits that will be penetrating through them.

C. Metal studs: 3 5/8" x 1 ¼" x 20 GA, and 3 5/8"x 1 ¼" x 26 GA, as indicated.
D. Metal furring channels: 1 ½ "
E. Hanger or suspension wire: 9 gauge galvanized.
F. Tie Wire: 12 gauge galvanized.

PART 3 EXECUTION

3.1 TEMPORARY BRACING

A. Temporary bracing shall be provided whenever necessary to take care of all loads to which the structure is subjected, including piles of materials as well as weights of erection equipment.

3.2 INSTALLATION

A. Materials and installation under this section shall meet or exceed all state or local laws, codes, and requirements governing this Work.
B. Partitions:
1. Attach metal tracks at sill and head of partitions with suitable fasteners located 2" from ends and spaced 24" o.c.
2. Position studs vertically, engaging sill and head runners. Anchor all studs to channel flanges with two #10 sheet metal screws each side, top and bottom. Walls shall be aligned and plumbed.
3. Place studs at 16" o.c. typical unless otherwise noted.
4. Construct corners using minimum three studs. Double studs at door, window and side light jambs. Install intermediate studs above and below openings to match the stud wall spacing.
5. Provide deflection allowance below supported horizontal building framing in ceiling or head track for non-load bearing framing.
6. Erect load bearing studs one piece full length. Splicing of framing components is not permitted.
7. Erect load bearing studs, brace, and reinforce to develop full strength to meet design requirements.
8. Install a channel runner at all openings with flanges cut and bent down to allow flanges to overlap studs and secure with screws each side, each end. Fill in studs over or under openings.
9. Provide and install all blocking, furring strips or grounds detailed or required to provide anchorage for all fixtures, as required to complete the work. All blocking and backing shall be securely screwed in place.
10. Wall containing pipes and conduits shall be framed to provide clearances required for piping. Walls shall be furred or plates and sills reinforced with metal as required for adequate rigidity and bearing for finishes. Walls containing pipes shall be filled-in around pipes with sound insulation stapled to studs. Use same insulation to protect around piping at points of contact.
11. Provide all bridging as required.
12. Touch-up field connections and breaks in shop coating with same primer used for shop priming.

13. Tops of walls shall be attached or braced to the structure as indicated. Braces shall be of size and spacing indicated.
14. Ensure framing provides true and flat surfaces, ready to receive finish.

C. Furring and Suspension Systems:
1. Provide all furring channels and walls and all metal furred ceiling suspension systems as indicated to support Gypsum wallboard as required.

D. Backing
1. Provide backing in stud walls, ceilings and furring to receive cabinets, toilet room accessories, hardware, and hung electrical, plumbing and heating apparatus and equipment. Accurately fit backing, set slightly back from face of studs, and securely spike to studs.

END OF SECTION

SECTION 05500

METAL FABRICATION

PART 1 GENERAL

1.1 SUMMARY

A. Section Includes:
   1. Fabricated metal bollards
B. Related section:
   1. Section 03300 (Cast-In-Place Concrete)
   2. Section 09900 (Paints and Coatings)

1.2 REFERENCES

A.	ASTM A53	Specification for Pipe, Steel, Black and Hot-Dipped, Zinc-Coated Welded and Seamless
B.	ASTM A123	Specification for Zinc (Hot-Dip Galvanized) Coatings on Iron and Steel Products

1.3 DEFINITIONS

A. Galvanizing: Hot-dip galvanizing per ASTM A123 with minimum coating of 2.0 ounce of zinc per square foot of metal (average of specimens) unless noted otherwise or dictated by standard.

PART 2 PRODUCTS

2.1 MANUFACTURED UNITS

A. Bollards surrounding transformer:
   1. 4 inch schedule 80 steel pipe
   2. Minimum 48 inch projection above ground.
   3. Minimum 48 inch embedment in concrete.
   4. Concrete filled with rounded concrete at top.

PART 3 EXECUTION

3.1 INSTALLATION

A. Set bollards level, true to line, and plumb.
B. Fill bollards with concrete per Section 03300 (Cast-In-Place Concrete).

END OF SECTION

DIVISION 6

WOOD AND PLASTICS

SECTION 06200

FINISH CARPENTRY AND MILLWORK

PART 1 GENERAL

1.1 SUMMARY

A. Section Includes:
   1. Finish carpentry items, including but not limited to shelving, door and window casing, molding, and base boards.
   2. New trim, casing, base boards to replace missing or damaged millwork.

1.2 SUBMITTALS

A. Product Data:
   1. Each separate door type as indicated on Door Schedule.

1.3 DELIVERY, HANDLING AND STORAGE

A. Deliver finish carpentry to Site only after proper facilities are available for handling, storing, and protecting items.
B. Any finish item damaged during handling shall be discarded and replaced with a new piece at no additional cost to Owner.

PART 2 PRODUCTS

2.1 MATERIALS

A. Casing, Trim, Moldings, and Base Boards: match existing
B. Nail and Fasteners: As recommended by manufacturer of items being installed.
   1. Exposed surfaces: Finish nails or flathead screws.
   2. Provide nails and screws to sufficiently hold trim securely in place.
C. Doors: As indicated in Door Schedule.

PART 3 EXECUTION

3.1 APPLICATION

A. Set work square, level, plumb and secured in place with proper fasteners.
B. Set all finish nails for putty.
C. Install all other miscellaneous specialty items not specified to be installed under other Sections and complete all finish carpentry Work required to produce a complete and finish installation.

END OF SECTION

SECTION 06410

CASEWORK AND SOLID SURFACING FABRICATIONS

PART 1 GENERAL

1.1 SUMMARY

A. Section Includes:
   1. Custom plastic laminate faced cabinetwork
   2. Solid surfacing countertops
   3. Cabinet hardware

1.2 REFERENCES

A.	ANSI A208.1	Wood Particle Board
B.	ANSI/NEMA LD 3	Solid Surfacing Material
C.	ASTM D1037	Evaluating the Properties of Wood-Base Fiber and Particle Panel Materials
D.	NEMA LD3	High Pressure Decorative Laminates
E.	US Department of Commerce (DOC) PS1	Construction and Industrial Plywood
F.	DOC PS20	American Softwood Lumber Standard
G.	DOC PS51	American Hardwood and Decorative Plywood Standard
H.	DOC PS58	American Basic Hardwood
I.	FED WW-P-541E	Federal Specifications and Standards, Plumbing Fixtures (General Specification)
J.	WIC Manual	Manual of Millwork

1.3 SUBMITTALS

A. Comply with WIC Manual, Section 1, Paragraph 7.4.
B. Product Data:
   1. Casework and solid surfacing
      a. Product description, fabrication information
C. Shop Drawings:
   1. Casework and solid surfacing
      a. Indicate materials, component profiles and elevations, assembly methods, joint details, fastening methods, accessory listings, hardware location, and schedule of finishes.
         1) Indicate grounds, backing, blocking and other items required for casework installation.
         2) The first page of the Shop Drawings shall bear the WIC Certified Compliance Label. Shop Drawings not complying with this requirement will be returned without approval (see Paragraph 1.4D).
         3) A statement shall appear prominently on the Shop Drawings certifying that all casework construction complies to the structural requirements of CBC Table 16A-O, for the required horizontal force factor for anchorage of non-structural components
D. Samples:
   1. Hardwood:
      a. Size: 1-1/2 inches x 6 inches beveled x 8 inches long

2. Hardwood plywood:
   a. Size: 12 inches x 12 inches
3. Solid surfacing material color selection
   a. Size: 6 inches x 6 inches

E. Quality Assurance/Control Submittals:
1. Certificates:
   a. WIC Certified Compliance Certificates
   b. Documentation of experience qualifications
2. Manufacturer's Instructions [include with close-out documents]:
   a. Casework and solid surfacing installation
   b. Casework and solid surfacing care and maintenance
   c. Casework and solid surfacing repair and cleaning

1.4 QUALITY ASSURANCE

A. Construct all wood casework in accordance with WIC Custom quality.
B. Fabricate all laminated plastic casework in accordance with WIC Custom Quality.
C. Cabinets and countertops shall be manufactured in accordance with Section 14, 15, 16, and 17, Supplement 1 and 2 of WIC for Style A, Type 1, Frameless Construction or to higher standards if specified herein.
D. If the manufacturer is not a WIC licensee, the Contractor shall furnish a Certificate of Re-inspection by the WIC indicating that the Work meets the requirements of the WIC grade specified.
E. If the manufacturer is a WIC licensee, each unit of work shall bear the WIC Certified Compliance grade stamp indicating the grade specified.
F. WIC Certified Compliance Certificates shall indicate that the products furnished fully meet the requirements for the grade specified.
G. One copy of the referenced WIC Manual of Millwork shall be made available for reference at the Site throughout the installation period.
H. Solid surfaces allowable tolerances:
1. Variation in component size: +/- 1/8 inch.
2. Location of openings: +/- 1/8 inch from indicated location.

I. Mock-Ups:
1. Provide mockup of full-size plastic laminate faced base cabinet and upper cabinet.
2. Provide units with specified countertop; with hardware installed.
3. Units will be examined to ascertain quality and conformity to WIC quality level standards and specification requirements.

1.5 QUALIFICATIONS

A. Manufacturer and Installer: Company specializing in manufacturing the products specified in this Section with minimum five years experience.

1.6 DELIVERY, STORAGE AND HANDLING.

A. Deliver, store and handle casework products under the provisions of WIC Manual Section 1, Paragraph 9.
B. Provide additional protection as needed to assure that the Work of this Section remains undamaged during fabrication, installation, and the time between completion of installation and actual acceptance of the total Work.
C. Do not deliver solid surfaces, cabinets, and fixture materials or products to the job site until concrete and plaster installations are completed and dry.

D. Protect units from moisture damage prior to installation.
E. Use all means necessary to protect delivered units from possible damage from other trades, before, during, and after installation.
F. All casework units delivered to the Site shall be properly identified as to the location in the structure.

1.7 COORDINATION

A. Coordinate the Work with plumbing and electrical rough-in.
B. Coordinate rough-in for items installed through or in millwork and trim. Locate rough-ins for proper alignment with edges, faces, and reveals.

1.8 ENVIRONMENTAL REQUIREMENTS

A. Condition interior casework and trim products to building environment. Maintain temperature and humidity at completed Work and accordance with requirements for storage.
B. Do not install casework and trim until required temperature and relative humidity conditions have been stabilized and will be maintained in installation areas.

1.9 WARRANTY

A. Provide manufacturer's 10 year warranty against defects in materials. Warranty shall provide material and labor to repair or replace defective materials. Damage caused by physical or chemical abuse or damage from excessive heat will not be warranted.

PART 2 PRODUCTS

2.1 WOOD MATERIALS

A. Softwood Lumber: DOC PS20; graded in accordance with WIC Custom Grade.
   1. Moisture content shall be a minimum of 6 percent and shall not exceed 12 percent up to 2-inch nominal thickness and shall not exceed 19 percent for pieces thicker than 2 inches up to 4-inch nominal thickness.
   2. Provide solid stock lumber at all locations except where other material is specified or indicated.
B. Hardwood Lumber: DOC PS58; graded in accordance with WIC Premium Grade.
   1. Moisture content shall be a minimum of 6 percent and shall not exceed 12 percent up to 2-inch nominal thickness and shall not exceed 19 percent for members thicker than 2 inches up to 4-inch nominal thickness.
   2. Provide solid stock capable of receiving transparent finish, with grain and uniform color matching the adjacent Work.

2.2 SHEET MATERIALS

A. Softwood Plywood: DOC PS1; graded in accordance with WIC Custom Grade, Grade A for opaque and transparent finish, core materials as specified herein.
B. Hardwood Plywood: DOC PS51; graded in accordance with WIC Premium Grade, Grade B for opaque finish, Grade AA for transparent finish, core materials as specified herein, type of glue recommended for application, face veneer and types of veneer cuts as selected by Owner.
C. Wood Particleboard: ANSI 208.1; Grades 2-M-2 and 2-M-3, composed of wood chips matrix, medium density, bound with high, moisture resistant, polyurea resin binders complying with ASTM D1037, or water resistant adhesive of grade to suit application, sanded faces.

D. Core, One of Following:
   1. Wood Particleboard: ANSI A208.1; medium density fiberboard, sanded.
   2. Veneer Core: Constructed of an odd number of plies, with inner plies in pairs, except innermost ply. Grain of each ply shall be at right angles to the grain of the adjacent ply.
   3. Or Approved Equal

2.3 LAMINATE MATERIALS

A. Acceptable Manufacturer: Nevamar or Approved Equal.
B. Plastic Laminate: NEMA LD3; decorative high pressure laminate, general purpose type. Comply with Section 15 WIC. Color, pattern, gloss, and surface texture as selected by Owner. Minimum required thickness:
   1. Countertops: 0.050 inch
   2. Vertical surfaces: 0.028 inch
   3. Vertical post forming: 0.030 inch
   4. Horizontal surfaces other than countertops: 0.040 inch
   5. Self-edge bands: 0.028 inch
   6. Cabinet liners: 0.020 inch
   7. Backing sheets: 0.020 inch
C. Laminate Backing Sheet: NEMA LD3; backing grade, undecorated plastic laminate, for backing at countertops and other concealed locations.
D. Cabinet Liner: NEMA LD3; high pressure liner material, Melamine brand or Approved Equal, white color, unless otherwise indicated.

2.4 SOLID SURFACE MATERIALS

A. Acceptable manufacturers:
   1. Corian as manufactured by DuPont Corp., Wilmington, Delaware
   2. Surell produced by Wildon Industries, a subsidiary of Formica Corporation, Mt. Bethel, Pennesylvania
   3. Avonite Inc., Belen, New Mexico
   4. Or Approved Equal
B. Material to be a solid homogeneous material, a fully densified composite of modified resin and mineral filler.
C. Thickness: 3/4 inch.
D. Edge Joints: As indicated. Provide 3/8 inch roundover where not detailed.
E. Material: Homogeneous filled acrylic; not coated, laminated or of composite construction; meeting ANSI Z124.3, Z124.6, and FED WW-P-541E.
   1. Material shall have minimum physical and performance properties specified in Technical Bulletin 130 for Corian values, or shall be an Approved Equal.
   2. Superficial damage to a depth of 0.010 inches shall be repairable by sanding and polishing.
F. Lavatory tops with integral bowls: Molded countertop of solid polymer material complete with integrally molded bowl of solid polymer material; edge details as indicated. Provide with cove backsplash as indicated.
G. Window sills: 1/2 inch thick solid polymer material, adhesively joined with inconspicuous seams; edge details as indicated.

2.5 ACCESSORIES

A. Adhesive: Urea-formaldehyde resin, cold setting, or phenol type with catalytic agent set under a pressure of not less than 30 lbs. psi or any contact adhesive that has been approved by WIC for the area in which the Work is located.
B. Fasteners: Size and type to suit application. Material, color, and finish shall be same as metal to which applied, except use only stainless steel at aluminum materials and use cadmium plated at interior pre-painted steel products.
C. Bolts, Nuts, Washers, Lags, Pins, and Screws: Size and type to suit application; white metal finish in all locations.
D. Nails: Select material, type, size, and finish required for each use.
E. Concealed Joint Fasteners: Threaded steel.

2.6 HARDWARE

A. Hinges:
   1. Provide self-closing European-style concealed hinges
   2. 120 degrees minimum opening
   3. Safe closing adapters
   4. Blum or Approved Equal
B. Pulls, Hinged Door and Drawer:
   1. Amerock – bar pull
   2. Or Approved Equal
C. Drawer guides, full extension: Typical drawers, 100 lb. capacity rated minimum:
   1. Accuride - #3832
   2. Blum - #430E
   3. Grant - #329 and 527
   4. KV - 8400 series
   5. Or Approved Equal
D. Adjustable Shelf Standards:
   1. AM - #231.100.068 and #207.100.068
   2. Grant - #120 aluminum
   3. KDV - #255, zinc/steel or aluminum
   4. Or Approved Equal
   5. Provide shelf clips at each standard, each shelf
E. Shelf Extension:
   1. Accuride - AC501, heavy-duty slide
   2. Or Approved Equal
F. Grommets:
   1. 2-1/2 inch chrome plated solid brass computer grommets.
   2. Cap DGMM-4CH with matching liner DGMM-4ACH as manufactured by Doug Mockett and Co. or Approved Equal

2.7 HARDWARE FINISH

A. Concealed hardware: Polished or satin chrome or stainless steel.

2.8 FABRICATION - PLASTIC-COVERED CASEWORK

A. Construction: Custom Grade.
   1. Wall cabinet depth: 12 inches typically, excluding door and drawer front thickness. Height: 30 inches.

2. Base cabinet height: 36 inches, typically. Depth: 24 inches, excluding door and drawer front thickness. Verify sizes indicated.
3. Cabinet Width: Align wall cabinet and end panels with base cabinet and panels and not countertop edge
4. Shelves: Unless otherwise indicated, wall cabinets shall have two adjustable shelves.
5. Toe-kicks: Separate base unit for casework, 4 inches high by 3 inches deep at front and 4 inches high by 3/4 inch deep at exposed ends.
6. Use solid stock for frames, jambs, heads, stops, mounting strips and edges.
   a. Provide minimum two mounting strips, 1/2 inch by 2-1/2 inches, at top and bottom of each case. Provide intermediate mounting strip at middle of casework 60 inches high or higher.
7. Use plywood or particleboard core material for body construction of cabinets where members are more than 11 inches wide.
8. Where plywood or particleboard is used, trim exposed edges with hardwood, without face nailing.
9. Backs: 1/4-inch thick tempered hardboard, dadoed into top rail, sides and bottom of cabinet.

B. Components:
1. Casework shall be WIC Construction Style A - Frameless WIC Construction Type I - Multiple Self Supporting Units.
2. Exposed plastic laminate shall be selected from Formica brand or Approved Equal, of their solid color, wood grain colors with finish; laid up on core with self-edged tape or 3 mm PVC edge. Wood grain shall run and match vertically.
3. Semi-exposed surfaces shall be in accordance with WIC Requirements. Interior surfaces in open cabinets or behind glass doors shall be in accordance with WIC Requirements or match exposed surfaces.
4. Door and drawer front style shall be flush overlay.
5. Adjustable shelves shall be in accordance with WIC Requirements subject to a 30 pound per square foot uniformly spaced load not to exceed 200 pounds per shelf.
6. Casework shall have 4 inch high concealed toe spaces.
7. Fabrication of plastic covered casework shall comply to First Class Workmanship, as defined by the Woodwork Institute of California in their Manual of Millwork

C. Shop assemble casework for delivery to Site in units easily handled and to permit passage through building openings.
1. Accurately fit and align the separate parts.
2. Provide ample screw, glue-and-bolt blocks, draw-bolts, tongues, grooves, splines, dowels, tenons, mortises, and other means of fastening to render the Work substantial, rigid, and permanently secured in the proper position.
3. Provide sufficient additional material to permit scribing to walls, floors, and related Work.
4. Provide adequate allowance for shrinkage occurring after installation.

D. Cap exposed plastic laminate finish edges with material of same finish and pattern.

E. Drawers: 0.735 inch thick front faced with 0.028 inch thick plastic laminate, with 0.020 inch thick plastic laminate backing or cabinet liner, 5/8 inch thick sides, backs and sub-fronts, and 1/4 inch thick bottoms, Style A, frameless construction in accordance with WIC Supplement 2.
1. Provide slip dovetail construction, well glued, or other joinery type consistent with specified grade of casework.

2. Provide full extension slides at all drawers.

F. Doors: Flush overlay construction, minimum 0.735 inch thick, faced with 0.028 inch thick plastic laminate and 0.020 inch thick cabinet liner backs, all four edges edge-banded. Face pattern shall be continuous with drawer fronts and trim.
   1. Provide rubber stops at ends and backs of doors.
   2. Fit and adjust as necessary to achieve smooth and noiseless operation.

G. When necessary to cut and fit on Site, provide materials with ample allowance for cutting.
   1. Assemble with bolted and screwed connections, securing to structural backings with cinch anchors, expansion screws, or toggle bolts.
   2. Mortise-and-tenon all rails and stiles, neatly miter and member throughout, make butt joints flush and smooth, and make up permanent joints with water-resistant glue.
   3. Assemble fixtures without exposed face nails or face screws.

H. Apply plastic laminate finish in full uninterrupted sheets consistent with manufactured sizes. Fit corners and joints hairline; secure with concealed fasteners. Slightly bevel arises. Locate counter butt joints minimum 2 feet from sink cutouts.

I. Shop apply laminate backing sheet to reverse side of plastic laminate finished surfaces.

J. Mechanically fasten or firmly glue back splash to countertops.

K. Provide cutouts for plumbing fixtures, inserts, appliances, outlet boxes fixtures, and fittings. Verify locations of cutouts from on-site dimensions. Prime paint contact surfaces of cut edges.

L. Rout, drill, and otherwise prepare the surfaces as needed, and firmly install all finish hardware and accessories in accordance with the manufacturers' recommendations.

M. Adjustable Shelves: Support shelves on vertical metal shelf standards, recessed- mounted on sides of cabinet, spaced not more than 2 inches from front and back, provided with shelf clips which lock into standards with thumb-press.
   1. Thickness and lengths of shelves shall comply with WIC Technical Bulletin 435, for 50 lbs./square foot loading
   2. Alternatively, provide adjustable shelves supported by metal shelf rests inserted into vertical rows of cleanly-bored holes in cabinet sides, not exceeding 2 inches on center. Locate rows between 1-1/2 and 2 inches from front and back faces of cabinet body. Row size, spacing and location shall be identical throughout all casework units.

N. Closures: Minimum 1 inch and maximum 3 inches wide, scribed to wall. Close all gaps at face, bottom, and top of cabinets. Provide closure at all cabinet sides abutting walls, to ensure clearance for door to swing open fully.

2.9 FABRICATION - COUNTERTOPS

A. Provide solid surface.

B. Locate counter butt joints minimum 24 inches from sink cutouts.

C. All countertops shall have outside corners, radiused 2 inches.

D. Countertops shall extend 1/2 inch beyond faces of doors and drawer fronts along the front face of base cabinets and 1-1/4 inch beyond the exposed ends of base cabinets, where not abutting walls.

E. Unless otherwise indicated, back and side splashes shall be 4 inches high.

F. Provide support from below countertop, either by base cabinets or corbels spaced so that unsupported length does not exceed 36 inches.

2.10 FABRICATION OF SOLID SURFACES

A. Fabricate components in shop to greatest extent practical to sizes and shapes indicated in accordance with approved Shop Drawings and solid polymer manufacturer requirements.

B. Form joints between components using manufacturer's standard joint adhesive. Joints shall be inconspicuous in appearance and without voids. Attach 2 inch wide reinforcing strip of solid polymer material under each joint.
C. Provide holes and cutouts for plumbing and bath accessories as indicated.
D. Rout and finish component edges to a smooth, uniform finish. Rout all cutouts, then sand all edges smooth. Repair or reject Defective or inaccurate Work.
E. Finish: All surfaces shall have uniform finish.
F. Countertop Edges (Unless otherwise indicated)
   1. Front edge, countertops with sinks: No-drip bullnose.
   2. Backsplash, countertops with sinks: Integral coved, postformed.
   3. Backsplash, top edge: Square.
   4. Side splash, top edge: Square.

PART 3 EXECUTION

3.1 EXAMINATION

A. Verify adequacy of backing and support framing.

3.2 INSTALLATION

A. Install all Work in conformance with WIC Custom Grade Standard.
B. Set and secure casework in place; rigid, plumb, and level. Secure casework to walls or floors or both. Install toe kick bases first and level before setting casework bodies. Secure to floor structure with appropriate angles and anchors, concealed. Seismic requirements for casework attachment shall conform to the CBC Chapter 16.
C. Use fixture attachments in concealed locations for wall mounted components.
D. Use concealed joint fasteners to align and secure adjoining cabinet units and counter tops. Use threaded steel fasteners where possible.
E. Carefully scribe casework abutting other components, with maximum gaps of 1/32 inch. Do not use additional overlay trim for this purpose.

3.3 ADJUSTING

A. Adjust moving or operating parts to function smoothly and correctly.
B. Adjust doors, drawers, hardware, fixtures, and other moving or operating parts to function smoothly and correctly, without binding or squeaking.

3.4 CLEANING

A. Visually inspect each installed casework unit and countertop and thoroughly clean all surfaces using the cleaning material recommended by the manufacturer and carefully adjust all operating components for optimum operation after the cleaning operation.
B. Remove all rubbish, debris, tools, and equipment and leave the immediate work areas and casework units and countertops in a clean and acceptable condition.

3.5 FIELD INSPECTIONS

A. Contractor shall schedule and request field inspection of completed installation, as required herein, by WIC, and in accordance with WIC Re-inspection Service Program.

END OF SECTION

DIVISION 7

THERMAL AND MOISTURE PROTECTION

SECTION 07210

BUILDING INSULATION

PART 1 GENERAL

1.1 SUMMARY

A. Section Includes:
   1. Thermal insulation
   2. Sound control insulation

1.2 REFERENCES

A.	ASTM E136	Noncombustible Rated Unfaced Sound Control Batts
B.	ASTM C578	Standard Specification for Rigid, Cellular Polystyrene Thermal Insulation
C.	ASTM C665	Standard Specification for Mineral-Fiber Blanket Thermal Insulation for Light Frame Construction and Manufactured Housing

1.3 SUBMITTALS

A. Product Data:
   1. Thermal insulation
   2. Sound control insulation
B. Quality Assurance/Control Submittals:
   1. Certificates:
      a. Certificates of compliance with reference standards designated
   2. Manufacturer's Instructions:
      a. Installation of thermal breaks, straps, liner and anchors for thermal insulation

1.4 DELIVERY, STORAGE AND HANDLING

A. Deliver and store packaged materials in original containers bearing identification of manufacturer's name, R-values, and fiber materials. Maintain seals unbroken and labels intact until time of use.
B. Keep materials dry by storing off ground under water-tight covers.

PART 2 PRODUCTS

2.1 MANUFACTURERS

A. Sound Control Insulation:
   1. Owens Corning Fiberglas
   2. Manville
   3. Certainteed
   4. Or Approved Equal
B. Thermal Insulation:
   1. Thermal Design Simple Saver
   2. Guardian Energy Saver FP
   3. Or Approved Equal

2.2 MATERIALS

A. General Requirements:
   1. Thickness of batt or blanket insulation shall permit placement in available space
   2. Size: ½ inch wider than stud space
   3. R-values to fill cavity
B. Thermal insulation (Room 101 of existing building):
   1. Exterior walls and ceilings: ASTM C665, R-19, polyethylene-faced thermal batt insulation
      a. Ceiling insulation system must have fall protection fabric meeting requirements of OSHA (29 CFR-1926)
C. Thermal insulation (new building):
   1. Exterior walls: ASTM C665, R-19, polyethylene-faced thermal batt
   2. Ceiling ASTM C665, R-30, polyethylene-faced thermal batt
      a. Ceiling insulation system must have fall protection fabric meeting requirements of OSHA (29 CFR-1926)
D. Sound control insulation (new building):
   1. Interior walls: ASTM E136, R-13 or R-19 to fill wall cavity, un-faced fiberglass batt insulation

2.3 ACCESSORIES

A. Insulation Support: Straps, fasteners, friction fit, or wires as required.

PART 3 EXECUTION

3.1 INSPECTION

A. Examine areas to receive insulation for conditions that will adversely affect installation and performance.
B. Do not start Work until unsatisfactory conditions have been corrected.

3.2 APPLICATION

A. General Requirements
   1. Install insulation snugly between framing members and around pipes, conduits and outlet boxes as necessary to maintain integrity of insulation.
   2. Provide means to prevent displacement where required.
   3. Fill-in roof insulation, as needed, to provide a complete envelope after removal or installation of new or existing roof penetrations.
B. Sound Insulation
   1. Compress between skin of exterior wall or roof and obstructions in stud spaces.

3.3 DEFECTIVE WORK

A. Remove insulation in areas deemed Defective and replace with new material conforming to requirements.
B. Restore Work of other Sections to original condition if damaged in repair or replacement of Defective Work.
C. Remove or replace Work damaged by weather.

END OF SECTION

SECTION 07600

FLASHING AND SHEET METAL

PART 1 GENERAL

1.1 SUMMARY

A. Section Includes:
   1. Flashing and sheet metal, including, but not limited to, the following:
      a. Copings, parapet, and cap flashings
      b. Counterflashings over base flashings and at vent stacks

1.2 REFERENCES

A.	ASTM A924	Steel Sheet, Zinc Coated, (Galvanized) by the Hot-Dip Process
B.	ASTM B32	Specification for Solder Metal
C.	ASTM B749	Lead and Lead Alloy Strip, Sheet, and Plate Products
D.	ASTM D1187	Asphalt-Base Emulsions for Use as Protective Coatings for Metal
E.	ASTM D2626	Specification for Asphalt-Saturated and Coated Organic Felt Base Sheet Used in Roofing
F.	ASTM D2822	Asphalt Roof Cement

1.3 SUBMITTALS

A. Shop Drawings:
   1. Fully detailed, large-scale Shop Drawings of all fabricated items, including all flashing, and counter flashings. Describe material profile, jointing pattern, jointing details, fastening methods, and installation details.

1.4 QUALITY ASSURANCE

A. Standards: Conform to the applicable provisions of the SMACNA "Architectural Sheet Metal Manual."
B. Provide materials and installation that are compatible with roofing system specified in Section 07510 (Adhered Roofing System).

1.5 DELIVERY, STORAGE, AND HANDLING

A. Stack preformed and prefinished material to prevent twisting, bending, or abrasion, and to provide ventilation.
B. Prevent contact with materials during storage which may cause discoloration, staining, or damage.

PART 2 PRODUCTS

2.1 MATERIALS

A. Galvanized Steel: ASTM A924, G90 galvanizing:
B. Screws and Fasteners: Same material as sheet metal or material being fastened.
C. Solder: ASTM B32.
D. Cleats: 2-inch wide x 3-inch long. Fabricate from same material and gage as sheet metal being installed.

E. Metal Accessories: Provide sheet metal clips, straps, anchoring devices, and similar accessories as required for installation of work, matching or compatible with material being installed, non-corrosive, size and gage as required for performance.
F. Corrosion Isolation Paint: ASTM D1187, asphalt-base emulsions for use as protective coatings for metal, protective backing paint, with minimum of 15 mil dry film thickness.
G. Galvanized Repair Paint: Zinc-rich repair paint, Z.R.C., Cold Galvanizing, Tnemec-zinc 92, or Approved Equal.
H. Plastic Cement: ASTM D2822, Type I self-healing, adhesive, ductile, asphaltic base cement.

2.2 FABRICATION

A. Form sections true to shape, accurate in size, square, and free from distortion or defects. Form pieces in longest practical lengths.
   1. At curved flashings form shapes in accordance with SMACNA standards. Use soldered or welded lock-seams at top of curved parapet caps.
   2. Use metals in thicknesses appropriate to the radius, joint, seam and edge forming. Space joints as appropriate to the sheet stock width.
B. Fabricate cleats and starter strips of same material as sheet, minimum 3 inches wide, interlockable with sheet.
C. Hem exposed edges on underside 1/2 inch; miter and seam corners. Form material with flat lock and cover plate seam.
D. Solder and seal metal joints. After soldering, remove flux. Wipe and wash solder joints clean.
E. Fabricate corners from one piece with minimum 18 inch long legs; solder for rigidity, seal with sealant.
F. Fabricate vertical faces with bottom edge formed outward 1/4 inch and hemmed to form drip.
G. Fabricate counterflashings to allow toe to extend 4 inch minimum over roofing surface. Return and brake edges.

2.3 FINISH

A. Shop-prepare and prime exposed metal surfaces. Prime all contact surfaces of dissimilar metals with bitumastic paint.
B. Finish coat exposed metal surfaces:
   1. Paint: Per Section 09905 (Exterior Painting and Protective Coating)

PART 3 EXECUTION

3.1 EXAMINATION

A. Examine the substrate and the conditions under which flashing and sheet-metal Work is to be performed. Do not proceed with the Work until unsatisfactory conditions are corrected.
B. Verify roof openings, curbs, pipes, sleeves, ducts, or vents through roof are solidly in place, and nailing strips located.
C. Verify membrane termination and base flashings are in place, sealed, and secure.

3.2 INSTALLATION

A. General: Apply Work to even, smooth, sound, thoroughly clean, and dry surfaces free from defects. Install Work plumb and securely fastened for watertight installation. Provide accessories and other items essential to completion of Work, though not specifically shown or specified.

B. Install sheet metal according to recommendations in SMACNA's "Architectural Sheet Metal Manual" and as indicated. Conform to drawing details included in SMACNA's "Architectural Sheet Metal Manual".
C. Apply asphalt roofing cement between metal flashings and felt flashings.
D. Soldering: Solder metal joints watertight for full metal surface contact. After soldering, wash metal clean with neutralizing solution and rinse with water.
E. Expansion and Contraction: Provide expansion and contraction joints at all sheet metal work. Make up long straight runs of sheet metal work in 12 foot lengths maximum; and connect together with 3-inch loose-lock slip-type joints; and fill with sealant. For straight runs less than 12 feet but more than 8 feet, make a similar slip-type joint at center of run. Lock and solder seams of intermediate joints between expansion joints.
F. Flashings:
   1. Provide flashings, where indicated or required, to provide watertight protection; use galvanized sheet metal.
   2. Secure flashings in place using concealed fasteners.
   3. Fit flashings tightly in place. Make corners square, surfaces true and straight in planes, and lines accurate to profiles.
G. Counterflashings:
   1. Provide counterflashings at intersections of roof with vertical surfaces and similar conditions.
   2. Turn down counterflashings over base flashings not less than 4 inches; form to provide a spring action against base flashing or roofing.
   3. Insert counterflashings into reglets to form tight fit. Secure in place with plastic wedges at maximum 16 inches on center. Seal into reglets with sealant.
   4. Overlap joints a minimum of 4 inches and bed with elastomeric sealant. Provide prefabicated end closures.
H. Equipment Support Flashing: Coordinate installation of equipment support flashing and counterflashing with installation of roofing and equipment.

3.3 CLEANING

A. Clean off excess solder and sealants. Remove temporary protective coverings and strippable film as sheet metal flashing and trim are installed.

END OF SECTION

SECTION 07900

SEALANTS

PART 1 GENERAL

1.1 SUMMARY

A. Section Includes:
   1. Sealants at all interior and exterior building openings and floor penetrations.

1.2 REFERENCES

A. ASTM E814 — Standard Test Method for Fire Tests of Through-Penetration Fire Stops

1.3 SUBMITTALS

A. Product Data:
   1. Sealant type and intended use
B. Quality Assurance/Control Submittals:
   1. Certificates:
      a. Certification that sealant meets specification
   2. Manufacturer's Instructions:
      a. Sealant installation, including joint preparation

1.4 QUALITY ASSURANCE

A. Applicator of exterior elastomeric sealants shall be experienced in applying sealants similar to those specified.
B. Materials, articles, or equipment indicated are for the purpose of establishing a standard only. Other manufacturers which perform adequately will be considered acceptable subject to Owner's written approval.

1.5 PRODUCT DELIVERY AND STORAGE

A. Deliver sealants and related accessories in factory-sealed, unopened containers bearing manufacturer's name, batch number and product designation.
B. Store in unopened containers. Follow manufacturer's recommendations for storage temperature and shelf life.
C. Keep flammable material away from heat, sparks, and open flame. Use recommended solvents and cleaning agents for cleaning tools, equipment and skin.

PART 2 PRODUCTS

2.1 MANUFACTURERS

A. Dap
B. Sikaflex
C. Dow Corning
D. Or Approved Equal

2.2 MATERIALS

A. General Requirements:
   1. Sealant systems shall be compatible with contacting surfaces.

2. Sealant systems shall not stain adjacent exposed surfaces.
3. Manufacturer's standard color range shall permit matching sealants to color of contacting surfaces.

B. Sealants:
1. Fire stopping sealant: A two-part, foamed-in-place, silicone sealant or a one-part elastomeric sealant having fire-resistance ratings indicated per ASTM E814

PART 3 EXECUTION

3.1 INSPECTION

A. Inspect joints and spaces to receive sealants and do not start application until unsatisfactory conditions have been corrected.

3.2 PREPARATION

A. Cleaning
1. Thoroughly clean receiving surfaces, joints, and spaces of foreign materials.
2. Blow joints free of loose particles.
3. Use only cleaning materials approved by sealant manufacturer.

B. Primers
1. Prime surfaces as recommended by sealant manufacturer immediately prior to sealing.

3.3 APPLICATION

A. Per manufacturer’s recommendations

B. Usage:
1. At penetrations through fire rated surfaces

C. Tooling:
1. Using tooling agent recommended by sealant manufacturer, neatly tool joints to compress material, improve adhesion to surface joined, and slightly concave surface.
2. Use masking tape where required to facilitate tooling and remove upon completion.

3.4 CLEANING

A. Clean adjacent surfaces soiled in applying sealants in accordance with sealant manufacturer’s recommendations.

END OF SECTION

DIVISION 8

DOORS AND WINDOWS

SECTION 08100

METAL DOORS AND FRAMES

PART 1 GENERAL

1.1 SUMMARY

A. Section Includes:
   1. Non-rated and fire-rated steel doors and frames: interior and exterior
B. Related Sections:
   1. Section 08710 (Finish Hardware)

1.2 REFERENCES

A.	ANSI/SDI A250.8	Standard Steel Doors and Frames
B.	ASTM A1008/A1008M-07a	Standard Specification for Steel, Sheet, Cold-Rolled, Carbon, Structural, High Strength Low-Alloy, High-Strength Low-Alloy
C.	ASTM A1011/A1011M-07a	Standard Specification for Steel, Carbon (0.15 Maximum, Percent), Hot-Rolled Sheet and Strip Commercial
D.	ASTM A653	Standard Specification for Steel Sheet, Zinc-Coated (Galvanized) or Zinc-Iron Alloy-Coated (Galvannealed) by the Hot-Dip Process
E.	FS DD-G-1403	Glass, Float, Sheet, Figured, Coated (Heat Strengthened and Tempered)
F.	NFPA 80	Fire Doors and Windows
G.	NFPA 252	Fire Tests for Door Assemblies
H.	ANSIA250.112001	Recommended Erection Instructions for Steel Frames
I.	UL 10B	Fire Tests of Door Assemblies
J.	UBC 7-2	Fire Test of Door Assemblies

1.3 SUBMITTALS

A. Product Data:
   1. Metal doors and frames of each style scheduled.
B. Shop Drawings:
   1. Indicating frame elevations and configuration, location of each type of door scheduled, anchor types and spacings, location of cutouts for hardware, reinforcement, and finish. Key jamb, head, and mullion details on door frame elevations for each frame and condition.
   2. Show door elevations, internal reinforcement, and closure method.
   3. Show jamb, mullion, and head details keyed to the frame elevations, drawn to scale, including partition types required at each frame. Indicate partition type dimensions and components and cross reference to partition types indicated.
C. Quality Assurance/Control Submittals:
   1. Manufacturer's Instructions:
      a. Metal door and frame installation

1.4 QUALITY ASSURANCE

A. Standards: Conform to requirements of ANSI/SDI A250.8.

B. Regulatory Requirements: Conform to ADA, CCR Title 24, and UBC 7-2 for fire-rated frames and doors, and as follows:
   1. Door and Frame Construction: Conform to NFPA 252 and UL 10B.
   2. Fire Rated Assemblies: Where a fire-resistance classification is indicated or required, provide fire-rated doors and frames investigated and tested as an assembly; identify each fire door and frame with UL labels, indicating fire-rating of both door and frame.
   3. Temperature Rise: Certified to conform to UBC 7-2 for positive pressure test. Provide with supplementary S-label.
   4. Installed Frame and Door Assemblies: Conform to manufacturer's instructions for fire-rated class indicated.

1.5 DELIVERY, STORAGE, AND HANDLING

A. Deliver metalwork cartoned or crated to provide protection during transit and job storage.
B. Inspect metalwork upon delivery for damage. Repair and replace damaged items as required.
C. Keep stored material covered and protect from damage.

PART 2 PRODUCTS

2.1 MANUFACTURERS

A. Metal doors and frames:
   1. Ceco Door Products
   2. Curries Company
   3. Forderer Cornice Works
   4. Habersham Metal Products Co.
   5. Security Metal Products Corp.
   6. Steelcraft
   7. Stiles Custom Metal
   8. Or Approved Equal

2.2 MATERIALS

A. Hot-Rolled Steel Sheets: ASTM A1011/A1011M-07a, Commercial Steel (CS), Type B; free of scale, pitting, or surface defects; pickled and oiled.
B. Cold-Rolled Steel Sheets: ASTM A1008/A1008M-07a, Drawing Steel (DS), Type B; stretcher-leveled standard of flatness.
C. Metallic-Coated Steel Sheets: ASTM A653, Commercial Steel (CS), Type B, with an A40 (ZF120) zinc-iron-alloy (galvannealed) coating; stretcher-leveled standard of flatness.
D. Inserts, Bolts, and Fasteners: Manufacturer's standard units for the required application; hot-dip-galvanize items to be embedded in or in contact with concrete foundation wall or slab-on-grade.
E. Primer: Red-oxide/zinc-chromate primer for interior; zinc-dust/zinc-oxide primer for galvanized surfaces.
F. Rubber Silencers: Resilient rubber, snap-in type.
G. Tempered Glass: clear, where required by code, per FS DD-G-1403

2.3 DOORS AND FRAMES

A. Exterior Doors:
   1. Grade: ANSI/SDI A250.8, Level 3 -Extra Heavy Duty, 16-gage face sheets.
   2. Type: Model 2 -Seamless edge design, with fully insulated core.

B. Exterior Frames: ANSI/SDI A250.8, Level 2 16-gage thick material, with corners mitered, continuously welded, and ground smooth.
C. Frame Anchors: Minimum 16-gage thick steel, UL listed as required for fire rating, as follows:
   1. Metal Stud Anchors: Z-type anchor, welded to frame.
   2. Masonry Anchors: Adjustable T -strap, corrugated, 2 inch x 10 inch size, perforated and permanently anchored to frame at fire-rated frames.
   3. Existing Concrete Wall Anchors: 0.053-inch thick pipe spacer with 2-inch x 0.053-inch thick steel plate sized to accommodate a 3/8-inch diameter countersunk flathead expansion anchor.
   4. Floor Clip: Adjustable 2-piece angle anchor, full width of frame, 0.067 -inch thick steel.
D. Interior Doors:
   1. Grade: ANSI A250.8, Level 2 performance level "B," 18-gauge face sheet
   2. Sound insulated minimum STC-35

2.4 FABRICATION

A. Fabricate frames as welded unit type. Fabricate frames and doors with hardware reinforcement plates welded in place.
B. Close top edge of exterior doors flush with inverted steel channel closure. Seal joints watertight.
C. Stops and Moldings:
   1. Fixed Stops and Moldings: Form integral with door and frame
   2. Removable Stops and Moldings: Provide at inside of exterior doors, and outside of interior doors. Form corners with butted hairline joints. Secure with screws spaced uniformly not more than 12 inches on center.
      a. Material: Not less than 20-gage steel sheets, galvanized for exterior and cold rolled for interior.
      b. Fasteners at Secure Areas: use security fasteners as needed.
      c. Fasteners at Non-secure Areas: Phillips head machine screws.
D. Finish Hardware Preparation: Match existing hardware per Section 08710 (Finish Hardware), prepare metal door and frame units to receive finish hardware in accordance with ANSI/SDI A250.8.
E. Fire Rated Doors and Frames:
   1. Fabricate to meet requirements of UBC 7-2, UL 10B.
   2. Attach approved testing agency labels to each rated door and frame.

2.5 FINISH

A. Exterior Units: Factory primed finish providing a uniform dry film thickness of not less than 2.0-mils.
   1. Primer: Baked on. Finish color to match existing doors that are being replaced.

PART 3 EXECUTION

3.1 INSTALLATION

A. General: Install steel doors, frames, and accessories according to manufacturer's instructions.

B. Placing Frames: Set frames accurately in position, plumbed, aligned, and braced securely until permanent anchors are set. After wall construction is complete, remove temporary braces and spreaders, leaving surfaces smooth and undamaged.
   1. Fire-rated Frames: Install in accordance with NFPA 80 and with manufacturer's fire test report installation data.
   2. Where frames are anchored with bolts through the face, fill heads with metal putty, grind smooth, and touch-up prime paint.
   3. Install roll formed steel reinforcement channels between two abutting frames. Anchor to structure and floor.
C. Frame Anchors: Coordinate setting of frames with wall construction for wall thickness and anchor placement. Provide anchors as follows:
   1. Metal Stud Partitions: Minimum 3 wall anchors per jamb for frames up to 7'-6" high, and an additional anchor for each additional 18 inches. Install adjacent to hinge location on hinge jamb and at corresponding height on strike jamb. Attach to studs with screws.
   2. Floor Anchors: One anchor each jamb for interior doors. Where wall construction will not allow placement of floor anchor, provide additional jamb anchor as close to floor as possible.
   3. Masonry Walls: Minimum 3 wall anchors per jamb for frames up to 7'-6" high, and an additional anchor for each additional 18 inches. Install adjacent to hinge location on hinge jamb and at corresponding height on strike jamb.
   4. Existing Concrete or Masonry Walls: Minimum 3 completed opening anchors per jamb for frames up to 7'-6" high, and an additional anchor for each additional 18 inches. Install adjacent to hinge location on hinge jamb and at corresponding height on strike jamb. Set frames and secure to adjacent construction with bolts and masonry anchorage devices.
D. Door Installation: Install in accordance with ANSI/SDI A250.8. Fit metal doors accurately in frames, within clearances specified in ANSI/SDI A250.8.
   1. Fire Rated Doors: Install within clearances specified in NFPA 80.

3.2 TOLERANCES

A. Maximum Diagonal Distortion: 1/8-inch measured with straight edge, corner to corner.

3.3 ADJUSTING AND CLEANING

A. Adjust hardware for smooth and balanced door movement. Remove and replace Defective Work, including doors or frames which are warped, bowed, or otherwise damaged.
B. Sand smooth any rusted or damaged areas of prime coat, and apply touch-up of compatible air-drying primer.

END OF SECTION

SECTION 08360

INSULATED SECTIONAL OVERHEAD DOORS

PART 1 GENERAL

1.1 SUBMITTALS

A. Product Data:
   1. Components, application, hardware and accessories
B. Shop Drawings:
   1. Insulated Sectional Overhead Doors: Indicate opening dimensions and required tolerances, jamb connection details, anchorage spacing, hardware locations, installation details, and special conditions
C. Samples:
   1. For each finish product specified, to complete sets of color chips representing manufacturer's full range of available colors and patterns for Owner selection
D. Quality Assurance/Control Submittals:
   1. Manufacturer's Instructions:
      a. Insulated Sectional Overhead Doors installation
      b. Motor Operator Installation
   2. Qualification Statements:
      a. Installer qualifications per paragraph 1.3A
E. Installation, Operation, and Maintenance Manual:
   1. Insulated Sectional Overhead Doors with motor operators

1.2 QUALITY ASSURANCE

A. Installer Qualifications: Installer shall be authorized and qualified by manufacturer to install overhead door systems on the type and scope of project specified.

1.3 SYSTEM DESCRIPTION

A. Performance Requirements:
   1. Design doors to withstand positive and negative wind loads as calculated in accordance with applicable building code
      a. Test Wind Load: 1.5 times design wind load
   2. Doors shall have a minimum R-value of 17.5.
   3. Glass paneling in doors shall have a maximum SHGC value of 0.4 and a maximum u-factor of 0.32

1.4 DELIVERY, STORAGE, AND HANDLING

A. Store products in manufacturer's unopened packaging until ready for installation.
B. Store and dispose of all materials in accordance with federal, state and local laws.
C. Maintain environmental conditions (temperature, humidity and ventilation) within limits recommended by manufacturer for optimum results. Do not install products under environmental conditions outside manufacturer's absolute limits.

1.5 WARRANTY

A. Provide an original of the manufacturer's limited warranty against manufacturing defects and product workmanship.
   1. Sectional Door Warranty: 10 Years

2. Motor Operator Warranty: 2 years

PART 2 PRODUCTS

2.1 MANUFACTURERS

A. Overhead Doors:
   1. C.H.I. Overhead Doors
   2. Overhead Door Corporation
   3. Amarr Garage Doors
   4. Clopay Building Products Company
   5. Or Approved Equal
B. Motor Operators:
   1. Liftmaster
   2. Overhead Door Corporation
   3. Or Approved Equal

2.2 INSULATED SECTIONAL OVERHEAD DOORS

A. Insulated Steel Sectional Overhead Doors shall have the following characteristics:
   1. Door Assembly: Metal/foam/metal sandwich panel construction, with PVC thermal break and ship – lap design.
      a. Exterior Steel: Hot-dipped galvanized
      b. End Stiles: 16 gauge with thermal break
      c. Springs:
         1) Minimum 10,000 cycles
      d. Insulation: CFC free and HCFC free polyurethane
      e. Thermal Values: Minimum R-value of 17.5
   2. Windload Design: Provide to meet the Performance requirements specified above.
   3. Hardware: Galvanized steel hinges and fixtures. Ball bearing rollers with hardened steel races.
   4. Lock:
      a. Interior mounted slide lock
   5. Weatherstripping:
      a. Bulb-type strip at bottom section
   6. Track: Provide track as recommended by manufacturer to suit loading required and clearances available.

2.3 MOTOR OPERATORS

A. Application:
   1. 8′X12′ DOOR: ½ HP, 120V single phase motor
   2. 14′ x 14′ door ¾ HP 120V single phase motor
   3. 14′ x 18′ door 1 HP 208V three phase motor
B. Accessories:
   1. 3 button wall control (open-close-stop) with momentary contact to close
   2. Gear reduction drive
   3. Bottom sensing edge
   4. 2 transmitters per door size

PART 3 EXECUTION

3.1 INSTALLATION

A. Install assembly in accordance with manufacturer's instructions.
B. Anchor to adjacent construction without distortion or stress.
C. Fit and align assembly including hardware, plumb, level and square to ensure smooth operation.

3.2 CLEANING AND ADJUSTING

A. Adjust closures to operate smoothly throughout full operating range.
B. Clean doors, frames and glass.
C. Remove temporary labels and visible markings.

3.3 DEMONSTRATION

A. Demonstrate proper operation to Owner.

END OF SECTION

SECTION 08625

LIGHT TUBES

PART 1 GENERAL

1.1 SUMMARY

A. Section Includes:
   1. Light tubes, consisting of roof dome, reflective tube, and diffuser assembly

1.2 REFERENCES

A. ASTM D635	Standard Test Method for Rate of Burning and/or Extent and Time of Burning of Plastics in a Horizontal Position
B. ASTM D1929	Standard Test Method for Determining Ignition Temperature of Plastics
C. ASTM E84	Standard Test Method for Surface Burning Characteristics of Burning Materials
D. ASTM E283	Test Method for Rate of Air Leakage Through Exterior Windows, Curtain Walls, and Doors Under Specified Pressure Differences Across the Specimen
E. ASTM E330	Structural Performance of Exterior Windows, Curtain Walls and Doors
F. ASTM E547	Test Method for Water Penetration of Exterior Windows, Skylights, Doors and Curtain walls by Cyclic Air Pressure Difference
G. ICBO/ICC AC-16	Acceptance Criteria for Plastic Skylights

1.3 SUBMITTALS

A. Product Data:
   1. Light tube
B. Shop Drawings:
   1. Layout, profiles and product components, including anchorage, flashings and accessories
C. Quality Assurance/Control Submittals:
   1. Test Reports:
      a. Independent testing agency or evaluation service reports verifying compliance with specified performance requirements.
   2. Manufacturer's Instructions:
      a. Light tube:
         1) Preparation and installation
         2) Storage and handling requirements and recommendations

1.4 PERFORMANCE REQUIREMENTS

A. Completed light tube assemblies shall be capable of meeting the following performance requirements:
   1. Air Infiltration Test: Air infiltration will not exceed 0.30 cfm/sf aperture with a pressure delta of 1.57 psf across the tube when tested in accordance with ASTM E283.
   2. Water Resistance Test: No uncontrolled water leakage at 10.5 psf pressure differential with water rate of 5 gallons/hour/sf when tested in accordance with ASTM E547.

3. Uniform Load Test:
   a. All units shall be tested with a safety factor of 3 for positive pressure and 2 for negative pressure, acting normal to plane of roof in accordance with ASTM E330.
4. Fire Testing:
   a. When used with the Dome Edge Protection Band, all domes meet fire rating requirements as described in the International Building Code.
   b. Self-Ignition Temperature - Greater than 650 degrees F Per: UBC 26-6. See ASTM D1929.
   c. Smoke Density - Rating no greater than 450 Per UBC 8-1 (See ASTM E84) in way intended for use. Classification C.
   d. Rate of Burn and/or Extent - Maximum Burning Rate: 2.5 inches/min Classification CC-2. UBC 26-7. See ASTM D635.
   e. Rate of Burn and/or Extent - Maximum Burn Extent: 1 inch Classification CC-1: UBC 26-7. See ASTM D635.
   f. Roof dome must have visible light transmission of at least 92% and UV Light Transmission of 0.03% or less.

1.5 DELIVERY, STORAGE, AND HANDLING

A. Store products in manufacturer's unopened packaging until ready for installation.
B. Store and dispose of solvent-based materials, and materials used with solvent-based materials, in accordance with requirements of local authorities having jurisdiction.

1.6 PROJECT CONDITIONS

A. Maintain environmental conditions (temperature, humidity, and ventilation) within limits recommended by manufacturer for optimum results. Do not install products under environmental conditions outside manufacturer's absolute limits.

1.7 WARRANTY

A. Manufacturer's standard warranty for 10 years, covering manufacturer’s defects.

PART 2 PRODUCTS

2.1 MANUFACTURERS

A. Solatube
B. Velux
C. Or Approved Equal

2.2 LIGHT TUBE

A. General: Transparent roof-mounted skylight dome and self-flashing curb, reflective tube, and ceiling level diffuser assembly, transferring sunlight to interior spaces; complying with ICBO/ICC AC-16.

2.3 ACCESSORIES

A. Fasteners: Same material as metals being fastened, non-magnetic steel, non-corrosive metal of type recommended by manufacturer, or injection molded nylon.
B. Suspension Wire: Steel, annealed, galvanized finish, size and type for application and ceiling system requirement.
C. Sealant: Polyurethane or copolymer based elastomeric sealant as provided or recommended by manufacturer.

PART 3 EXECUTION

3.1 EXAMINATION

A. Do not begin installation until substrates have been properly prepared.
B. If substrate preparation is the responsibility of another installer, notify Owner of unsatisfactory preparation before proceeding.

3.2 PREPARATION

A. Clean surfaces thoroughly prior to installation.
B. Prepare surfaces using the methods recommended by the manufacturer for achieving the best result for the substrate under the project conditions.

3.3 INSTALLATION

A. Install in accordance with manufacturer's printed instructions.
B. After installation of first unit, field test to determine adequacy of installation. Conduct water test in presence of Owner. Correct if needed before proceeding with installation of subsequent units.

3.4 PROTECTION

A. Protect installed products until completion of Project.
B. Touch-up, repair or replace damaged products before Substantial Completion.

END OF SECTION

SECTION 08710

FINISH HARDWARE

PART 1 GENERAL

1.1 SUMMARY

A. Finish hardware required for doors other than insulated coiling and sectional overhead doors.

1.2 SUBMITTALS

A. Product Data:
   1. Finish Hardware, each type
B. Shop Drawings:
   1. Complete detailed hardware schedule references to the indicated hardware group numbers and hardware types

1.3 QUALITY ASSURANCE

A. This Specification is intended to cover all hardware, which will be required for doors which are indicated. While the hardware schedule is intended to cover all doors, cabinets and other movable parts of the building and establish a type and standard of quality, it shall be the specific duty and responsibility of the Contractor to examine the Contract Documents, and furnish proper hardware for all openings whether listed or not.
B. Comply with applicable fire and building codes. Hardware must be UL approved and meet all requirements for rated openings.

1.4 PRODUCT DELIVERY, STORAGE AND HANDLING

A. Deliver hardware in packages bearing manufacturer's labels and identify each item of hardware according to reviewed hardware list and schedule.
B. Hardware shall be protected at all times both prior to and after installation.

PART 2 PRODUCTS

2.1 GENERAL REQUIREMENTS

A. Fastening:
   1. Finish hardware shall be furnished with all necessary screws, bolts, or other fastenings of sufficient quantity, suitable size and type for heavy use and long life, and shall match adjacent hardware material and finish.
B. All new hardware shall match existing.

2.2 ACCEPTABLE MANUFACTURERS

A. Interior/Exterior Locksets:
   1. Schlage AL Series Keyed Lever Locks, Satin Chrome Finish
   2. Or Approved Equal
B. Gasket:
   1. Pemko
   2. National Guard Products
   3. Or Approved Equal
C. Door Stops:

1. Quality
2. Glynn-Johnson
3. Or Approved Equal

D. Butt Hinges:
1. Hager
2. Mont-Hard Inc.
3. Or Approved Equal

E. Closers:
1. LCN
2. Yale
3. Or Approved Equal

F. Hold Open:
1. LCN
2. Yale
3. Or Approved Equal

2.3 MATERIALS

A. Finish Hardware: as indicated.

B. Keying:
1. All locks must be keyed and registered at the lock factory. Grand-master key to existing key system as directed by Owner. Master key, key alike or key different all locks in accordance with keying schedule furnished by Owner.
2. Provide three keys per lock.
3. Supply locks and keys with visual key control; stamped cylinders and keys as directed by Owner.

PART 3 EXECUTION

3.1 INSPECTION

A. Doors, door frames, and hardware shall be examined for damage, defects, and suitability for intended use. Any part or item found damaged, defective or inadequate, shall be made good before installation or shall be replaced with good material.

3.2 PREPARATION

A. Coordinate with Work requiring hardware or Work to which hardware attaches.

B. Provide necessary copies of schedules and templates in ample time to avoid fabrication and construction delays.

3.3 INSTALLATION

A. Install finish hardware in accordance with manufacturer's templates and instructions.

B. Fitting:
1. Accurately and properly fit hardware. Securely fasten fixed parts for smooth, trouble-free, non-binding operation; fit faces of mortised parts snug and flush; operating parts shall move freely and smoothly without binding, sticking or excessive clearance.

C. Protect hardware from damage or marring of finish during construction.

D. Insure hardware displays no evidence of finish paint after final building clean-up with exception of prime-coated hardware installed for finish painting, if applicable.

E. Latch and Bolt:

1. Install latch and bolt to automatically engage in keeper, whether activated by closer or by manual push; in no case shall additional manual pressure be required to engage latch or bolt in keeper.

F. Closer: Carefully adjust closers to operate noiselessly and evenly.

G. After the work has been otherwise completed, examine hardware in place for complete and proper installation. Lubricate bearing surfaces of moving parts and adjust latching and holding devices for proper function; adjust door control devices for speed and power; test keys for proper conformance with the keying system.

H. Completely remove protective materials and devices and thoroughly clean exposed surfaces of hardware; check for surface damage prior to final cleaning for Owner's acceptance.

END OF SECTION

DIVISION 9

FINISHES

SECTION 09250

GYPSUM BOARD

PART 1 GENERAL

1.1 SUMMARY

A. Related Sections:
   1. Section 05400 (Light Gauge Metal Framing)
   2. Section 07900 (Sealants)
   3. Section 09900 (Paints and Coatings)

1.2 REFERENCES

A.	ASTM A653	Standard Specification for Sheet Steel, Zinc-Coated (Galvanized) or Zinc-Iron Alloy-Coated (Galvannealed) by the Hot-Dip Process
B.	ASTM C475	Specification for Joint Compound and Joint Tape for Finishing Gypsum Board
C.	ASTM C840	Specification for Application and Finishing of Gypsum Board
D.	ASTM C1396	Standard Specification for Gypsum Board
E.	GA 214	Recommended Levels of Gypsum Board Finish

1.3 DEFINITIONS

A. Wet Area: Toilets, showers, laboratories, janitor closets (or areas around janitor sink), and areas around emergency eye wash/showers.

1.4 SUBMITTALS

A. Product Data:
   1. Gypsum board
B. Shop Drawings:
   1. Drawings of unusual conditions
      a. Control joint layout
C. Quality Assurance/Control Submittals:
   1. Certificates:
      a. Acknowledgement that products submitted meet requirements of standards referenced
   2. Manufacturer's Instructions:
      a. Gypsum board installation
      b. Manufacturer's adhesive, sealer, joint treatment compound, and tape recommendations

PART 2 PRODUCTS

2.1 MANUFACTURERS

A. Subject to compliance with the Contract Documents, the following manufacturers are acceptable:
   1. Gypsum board and accessories:
      a. Georgia - Pacific

b. National Gypsum
c. U. S. Gypsum Co.
d. Or Approved Equal
2. Gypsum board suspension system:
a. Chicago Metallic Corp.
b. Or Approved Equal

2.2 MATERIALS

A. Gypsum Board:
1. ASTM C1396
2. Furnish in lengths as long as practicable with tapered edges
3. Regular board: 5/8 inch thick
4. Fire-rated board: 5/8 inch thick
B. Adhesive: As recommended by board manufacturer.
C. Sealers for Water Resistant Board: Recommended by board manufacturer.
D. Joint Treatment Compound:
1. ASTM C475
2. Recommended by manufacturer for specified board type and location
3. Do not use self-adhesive fiber mesh tape
E. Joint Tape:
1. ASTM C475
2. Recommended by manufacturer for specified board type and location

2.3 ACCESSORIES

A. General:
1. ASTM A653, galvanized G90
B. Corner Bead:
1. Standard type with perforated flanges
C. Casing and Trim Bead: Manufacturer's standard product.
D. Control and Expansion Joints: Manufacturer's standard product.
E. Fasteners:
1. Gypsum board:
a. Self-drilling Type S, corrosion-resistant bugle head screws
b. Provide stainless steel fasteners in wet areas
F. Foam Tape: PVC, ½ inch x ¼ inch pressure sensitive.
G. Tie Wire and Suspension Wire:
1. Galvanized, soft annealed 12 gauge minimum
2. Use soft stainless steel wire of same gage in all wet areas and/or exterior areas
H. Gypsum Board Suspension System:
1. Direct hung factory fabricated heavy duty rated, single web system
2. Electro-galvanized
3. Fire rated system, UL listed
4. Similar to Chicago Metallic "Fire Front 650 Drywall Furring System" or Approved Equal

PART 3 EXECUTION

3.1 INSTALLATION

A. General:

1. Install board in fire-rated walls in accordance with UL requirements
    a. Self-adhesive applied fire rated tape is not acceptable for use on board joints in fire rated walls
    b. Tape all joints using conventional fire rated joint tape and joint treatment compound
2. Erect all board vertically with edges over supporting members
    a. See Section 05400 (Light Gauge Metal Framing) for light metal framing
3. Secure to each support or framing member with screws
4. In areas having gypsum board ceilings and walls, install ceiling first
5. Bring boards into contact, but do not force into place
6. Fit neatly and carefully
7. Stagger edge joints on opposite side of a partition so they occur on different framing members
8. Hold board in firm contact with support while fasteners are being driven
9. Proceed with attachment from center of board toward ends and edges
10. Scribe board prior to cutting
11. Seal ends, cutouts and screw penetrations with water resistant sealant where water resistant board is used

B. Application:
1. Gypsum board:
    a. Use 5/8 inch thick board for general and fire-rated construction
2. Gypsum board for use in ceilings:
    a. Dry area ceilings: Provide 5/8 inch thick fire-rated board best suited and recommended by manufacturer for intended use
    b. Wet area ceilings (showers and other areas where ceilings will be exposed to direct water contact or condensation): Provide 5/8 inch thick fire-rated board approved by manufacturer for use in high humidity areas
    c. Where ceilings abut a concrete or masonry wall provide 3/8 inch joint between edge of wall and ceiling board
        1) Provide continuous solid casing bead trim on edge of board
        2) Seal joint with sealant and backer rod
        3) See Section 07900 (Sealants) for sealant
3. Gypsum liner panel:
    a. Use WR boards in walls common to wet areas
4. Casing and trim bead:
    a. Where bead abuts exterior window or other metal components, separate from other material using foam tape
5. Fasteners:
    a. Provide fasteners of sufficient length to penetrate framing member or stud not less than 3/8 inch
6. In curved wall or ceiling applications use ¼ inch thick board specifically designed for use in radius construction
    a. Apply in multiple layers as required to meet minimum drywall thickness specified

C. Installation (Single-Layer System):
1. Set fasteners between 3/8 inch and 1/2 inch from edges and 2 inches in from board corner
    a. Space maximum of 12 inches on center at edges and in field of board
    b. Where board butts at wall/ceiling juncture, hold fasteners back 6 inches from edges
    c. Space fasteners closer if required by UL

2. Install fasteners, in gypsum board, so that head rests in a slight dimple without cutting face paper or fracturing core or as recommended by board/panel manufacturer

D. Control Joints:
1. Install prefabricated control joints to provide the following maximum un-jointed lengths or areas:
   a. Control joints: #093 zinc coated control joint
   b. Partitions: 30 feet, maximum straight run, and at lock side of jamb from head of each door opening to top of partition
   c. Ceilings: 50 feet maximum in one direction, and at change of direction or irregular shapes
   d. Ceiling area: 2,500 square feet, maximum
2. Calk control joints
   a. Use color to match wall or ceiling color as closely as possible
3. Where control or expansion joints occur in fire or sound rated assemblies, install suitable backing material to maintain required rating
4. Where a partition or ceiling abuts a structural element or dissimilar wall or ceiling, install corner bead, casing bead or other trim as required

E. Board Finishing:
1. Securely attach continuous corner beads to all external corners in accordance with manufacturer's recommendations
2. Provide minimum levels of gypsum board finish in accordance with GA 214 as indicated
   a. Provide additional coats of joint compound as required to completely conceal joints, fasteners and accessories
      1) Joint photographing will not be acceptable
3. Sand each coat to remove excess joint compound. Avoid roughing paper facing on board
4. Area designated for texture: "light orange peel"
   a. All other finish surface: smooth and free of tool marks and ridges
5. After primer has been applied to wall surface in accordance with Section 09900 (Paints and Coatings), repair and refinish all areas which show defects
6. Refer to ASTM C840 for additional finishing requirements

F. Install ceiling suspension system in accordance with manufacturer's recommendations.
1. Maximum spacing of furring channels: 16 inches on center

END OF SECTION

SECTION 09510

SUSPENDED CEILINGS

PART 1 GENERAL

1.1 SUMMARY

A. Section Includes:
   1. Suspended metal grid ceiling systems, acoustical panels and tiles, and perimeter trim

1.2 REFERENCES

A.	ASTM C635	Metal Suspension Systems for Acoustical Tile and Lay-in Panel Ceilings
B.	ASTM C636	Installation of Metal Ceiling Suspension Systems for Acoustical Tile and Lay-in Panels
C.	ASTM E580	Application of Ceiling Suspension Systems for Acoustical Tile and Lay-in Panels in Areas Requiring Moderate Seismic Restraint
D.	ASTM E1264	Standard Classification for Acoustical Ceiling Products
E.	ASTM E84	Standard Test Method for Surface Burning Characteristics of Building Materials

1.3 SUBMITTALS

A. Product Data:
   1. Metal grid system components, acoustic units, and all other products to be used
B. Samples:
   1. Submit samples 12 x 12 inch in size or full size units, illustrating material, texture, color, and finish of acoustic units. Submit samples 12 inches long of suspension system main runner, cross runner, edge trim, and all special shapes required.
C. Quality Assurance/Control Submittals:
   1. Certificates:
      a. Manufacturer's certificate approving ceiling installer
   2. Manufacturer's Instructions:
      a. Installation of metal grid system components, acoustic units, and all other products to be used

1.4 QUALITY ASSURANCE

A. Installer Qualifications: Company with documented experience and approved by manufacturer.
B. Regulatory Requirements:
   1. Fire and Smoke: Conform CBC for fire-rated assemblies and for combustibility requirements for materials.
   2. Seismic: Conform to CBC Chapter 25 and UBC Standard No. 25-2 for the design, details, and specifications for lateral bracing requirements for seismic Zone 4.
C. Job Conditions:
   1. Maintain uniform minimum temperature per manufacturer's instructions before and during construction.
   2. Protect installation from damage during remainder of construction.
   3. Coordinate acoustical with mechanical and electrical.

1.5 DELIVERY, STORAGE, AND HANDLING

A. Deliver acoustical ceiling materials to the Site in original, unopened packages, bearing the manufacturer's name and label identifying each type of material.
B. Comply with acoustical material manufacturer's recommendations for storage of materials.

1.6 EXTRA MATERIALS

A. Provide the following extra materials:
   1. Acoustical Panels and Boards: 6 Boxes of each type and pattern of acoustical panel and board.
   2. Suspension System in one-foot square packages with all components of the system included.

PART 2 PRODUCTS

2.1 ACCEPTABLE MANUFACTURERS

A. Suspended Ceiling:
   1. Armstrong
   2. Chicago Metallic Corp.
   3. Or Approved Equal
B. Purlin Clips:
   1. Cooper B-Line
   2. Erico
   3. Or Approved Equal

2.2 SUSPENSION SYSTEM MATERIALS

A. Wire: #12 gauge annealed mild steel galvanized wire
B. Purlin Clips able to suspend static load of 100 lbs or greater.

2.3 ACOUSTIC MATERIALS

A. Acoustic Panel Type AP-1: (Ceiling Grid Supported):
   1. Manufacturer: Armstrong World Industries "Dune #2722 with Second Look II", or Approved Equal.
   2. Size: 24 x 48 inches, 3/4-inch thick, with 9/16-inch wide scoring to simulate 24 x 24 inch panels.
   3. Noise Reduction Coefficient (NRC): 0.50
   4. Ceiling Attenuation Class (CAC): Minimum 35
   5. Flame Spread: ASTM E84: 0-25, UL labeled.
   6. Light Reflectance: 0.83
   7. Color: White
   8. Field cut panels to accept specified light fixtures. Center lights, smoke detectors, sprinkler heads, and speakers in panels.

PART 3 EXECUTION

3.1 EXAMINATION

A. Verify that existing conditions are ready to receive work and that layout of hangers will not interfere with other work. Do not begin installation until major above-ceiling work has been completed and unsatisfactory conditions have been corrected.

3.2 INSTALLATION

A. Install ceiling system in accordance with manufacturer's installation instructions and all applicable code requirements.
B. Install new ceiling tile throughout building, as indicated.
C. The completed system shall readily permit the removal of acoustical panels and also permit the removal of sections of suspended tee members without disturbing the balance of the system.
D. A metal angle shall be installed where tiles abut walls or other vertical surfaces.
E. 3/4" x 1" gaskets shall be fastened to suspended grid system at all intersections of grid system and interior walls.
F. At completion of the Work, all surfaces shall present true, level, and plane surfaces. All surfaces of tile shall be clean and suspension system shall be without nicks and scratches and finished appearance shall be acceptable to the Owner. Remove and replace all damaged or soiled material prior to the Owner's acceptance.

3.3 CLEANING AND PROTECTION

A. Clean exposed surfaces of acoustical ceilings, including trim edge moldings, and suspension members. Comply with the manufacturer's instructions for cleaning and touch-up of minor finish damage.
B. Remove and replace Work which cannot be successfully cleaned or repaired.

END OF SECTION

SECTION 09650

RESILIENT FLOORING

PART 1 GENERAL

1.1 SUMMARY

A. Section Includes:
   1. Rubber floor tile, vinyl composition tile, rubber base, and accessories.

1.2 REFERENCES

A. FS SS-W-40	Wall Base: Rubber and Vinyl Plastic
B. ASTM F710	Standard Practice for Preparing Concrete Floors to Receive Resilient Flooring

1.3 SUBMITTALS

A. Product Data:
   1. Include physical and performance characteristics, sizes, patterns, and colors (as appropriate) for the following:
      a. Rubber floor tile
      b. Vinyl composition tile
      c. Adhesive
B. Samples:
   1. One full size sample of the each resilient flooring material.
C. Quality Assurance/Control Submittals:
   1. Manufacturer's Instructions:
      a. Resilient flooring installation
      b. Cleaning and maintenance instructions. Include maintenance procedures, recommended maintenance materials, and suggested schedule for cleaning, stripping, and re-waxing.

1.4 DELIVERY, STORAGE, AND HANDLING

A. Deliver materials to the Site in manufacturer's unopened containers. Store materials for three days prior to installation in area of installation to achieve temperature stability.

1.5 EXTRA MATERIALS

A. Two boxes of each type and color of resilient flooring.

PART 2 PRODUCTS

2.1 FLOORING MATERIALS

A. Vinyl Composition Tile:
   1. Schedule as indicated
   2. Adhesive as recommended by manufacturer
B. Rubber Floor Tile:
   1. Schedule as indicated
   2. Waterproof adhesive as recommended by manufacturer

2.2 BASE MATERIALS

A. Manufacturers: Rubber base as manufactured by BurkeMercer Flooring Products Div. of Burke Industries, Johnsonite Div. of Duramax, or Approved Equal.
B. Rubber Base: FS SS-W-40, Type I Rubber; 4-inch high x 1/8-inch thick, coved-type at resilient flooring, carpet-type at carpet. Vinyl base not acceptable.
C. Base Accessories: Provide premolded end stops, and inside and outside corners, of same manufacturer, material, size, profile, and color as base.

2.3 ACCESSORIES

A. Trowelable Leveling and Patching Compounds: Type recommended by flooring material manufacturers.
B. Primers and Adhesives: Waterproof, low VOC-emitting, stabilized type as recommended by flooring manufacturer. Asphalt emulsion and non-waterproof type adhesives are not acceptable.
C. Sealer and Wax: Types recommended by flooring manufacturer
D. Floor Polish: Provide protective liquid floor polish products as recommended by manufacturer.
E. Cap Strip for Self-Coved Sheet Vinyl Base: Extruded aluminum with buffed, clear anodized finish; William L. Bonnell Company "Trimedge No. A-604-S", or Approved Equal.
F. Cove Stick for Self-Coved Sheet Vinyl: Pre-molded plastic, minimum 3/4-inch radius, 7/8-inch high; BurkeMercer Products Co. "No. 70", Flexco Co., or Approved Equal.
G. Welding Rods: Same manufacturer, composition, and color as sheet vinyl. Weld all joints of sheet vinyl with welding rods, using hot-air welding method for a monolithic waterproof floor.

PART 3 EXECUTION

3.1 EXAMINATION

A. Examine substrates, areas, and conditions with installer present, for compliance with manufacturer's requirements. Verify that substrates and conditions are satisfactory for resilient flooring installation.
B. Concrete Subfloors: Verify that concrete slabs comply with ASTM F710, and the following:
   1. Subfloors are free of cracks, ridges, depressions, scale, and foreign deposits.
   2. Surfaces are smooth and flat with maximum variation of 1/8-inch in 10 feet, and are ready to receive Work.
   3. Floors are dry and free of curing compounds, sealers, hardeners, and other materials that may interfere with adhesive bond.
C. Verify that moisture emission and calcium chloride levels are acceptable to manufacturer for type of resilient flooring to be installed.
D. Do not begin installation until unsatisfactory conditions have been corrected.

3.2 PREPARATION

A. Remove sub-floor ridges and bumps. Fill low spots, cracks, joints, holes, and other defects with in substrates with trowelable leveling and patching compound. Apply according to manufacturer's written instructions. Prohibit traffic from area until filler is cured.
B. Remove coatings, including curing compounds, soap, wax, oil, silicone, and other substances that are incompatible with flooring adhesives using mechanical methods as recommended by flooring manufacturer. Do not use solvents.

C. Broom and vacuum clean substrates immediately before installation of flooring. After cleaning, examine substrates for moisture, alkaline salts, carbonation, and dust.

3.3 INSTALLATION

A. Vinyl Composition Tile:
   1. General: Install resilient flooring in accordance with manufacturers' written instructions.
   2. Layout tiles from center marks established with principal walls so tiles at opposite edges of room are of equal width. Lay tile in a square grid pattern with all joints aligned. Allow minimum 1/2 full size tile width at room or area perimeter.
      a. Lay tiles square with room axis.
      b. Lay tiles with grain running in one direction.
   3. Mix tile from container to ensure shade variations are consistent. Discard broken, cracked, chipped, or deformed tiles.
   4. Adhere tiles to flooring substrates using a full spread of adhesive in accordance with tile manufacturer's written instructions. Spread only enough adhesive to permit installation of materials before initial set. Set flooring in place, press with heavy roller to attain full adhesion.
   5. Terminate flooring at centerline of door openings where adjacent floor finish is dissimilar. Extend tile into toe spaces, door reveals, closets, and similar openings.
   6. Install edge strips at unprotected or exposed edges, and where flooring terminates.
   7. Scribe tile flooring to walls, columns, fixed cabinets, floor outlets, pipes, door frames, and other appurtenances to produce tight joints. Install under freestanding equipment.

B. Rubber Tile:
   1. Comply with manufacturer’s written instructions for installing floor tile.
   2. Lay out floor tiles from center marks established with principal walls, discounting minor offsets so tiles at opposite edges of room are of equal width. Adjust as necessary to avoid using cut widths that equal less than one-half tile at perimeter.
      a. Lay tiles square with room axis in running bond pattern.
   3. Match floor tiles for color and pattern by selecting tiles from cartons in the same sequence as manufactured and packaged, if so numbered. Discard broken, cracked, chipped, or deformed tiles.
      a. Lay tiles with grain running in one direction.
   4. Scribe, cut, and fit floor tiles to butt neatly and tightly to vertical surfaces and permanent fixtures including built-in furniture, cabinets, pipes, outlets, and door frames.
   5. Extend floor tiles into toe spaces, door reveals, closets, and similar openings. Extend floor tiles to center of door openings.
   6. Maintain reference markers, holes, and openings that are in place or marked for future cutting by repeating on floor tiles as marked on substrates. Use chalk or other nonpermanent, nonstaining marking device.
   7. Install floor tiles on covers for telephone and electrical ducts, building expansion-joint covers, and similar items in finished floor areas. Maintain overall continuity of color and pattern between pieces of tile installed on covers and adjoining tiles. Tightly adhere tile edges to substrates that abut covers and to cover perimeters.
   8. Adhere floor tiles to flooring substrates using a full spread of adhesive applied to substrate to produce a completed installation without open cracks, voids, raising and puckering at joints, telegraphing of adhesive spreader marks, and other surface imperfections.

C. Base:

1. Fit joints tight and vertical. Maintain minimum measurement of 18 inches between joints.
2. Miter internal corners. At external corners, use premolded units. At exposed ends use premolded units.
3. Install base on solid backing. Bond tight to wall and floor surfaces. Do not stretch base during installation.
4. Scribe and fit to door frames and other interruptions.

3.4 PROTECTION

A. Prohibit traffic on floor finish for 48 hours after installation. Provide non-staining runners in traffic areas until flooring is ready for final cleaning.

3.5 CLEANING

A. Upon completion of installation, perform preliminary cleaning of resilient flooring and base. Remove excess adhesive from floor, base, and wall surfaces without damaging material or adjacent surfaces.
B. Immediately prior to Substantial Completion, clean floor and base surfaces using materials and methods recommended by the resilient flooring materials manufacturer, in accordance with manufacturer's instructions.
C. Wax resilient flooring with three coats of wax, allowing wax to dry between coats. Buff with commercial buffer between coats.
D. Floor Polish for Rubber tile: Remove soil, visible adhesive, and surface blemishes from floor tile surfaces before applying liquid floor polish.
   1. Apply two coats.
E. Cover rubber tile until Substantial Completion.

END OF SECTION

SECTION 09900

PAINTS AND COATINGS

PART 1 GENERAL

1.1 SUMMARY

A. Section Includes:
   1. Interior and exterior surface preparation and field application of paints and other coatings
   2. Pipe Bollard paint
   3. Filter Building recycled water pipe banding paint

1.2 REFERENCES

A.	GS-11	Green Seal Standards and Certification: Paint Standard Revision
B.	GC-03	Green Seal Standards and Certification: Environmental Criteria for Anti-Corrosive Paints
C.	ANSI Z535.1	Safety Colors
D.	ASTM E84	Standard test method for surface burning characteristics of building materials

1.3 SUBMITTALS

A. Product Data:
   1. Each material and product used
B. Samples:
   1. Submit three representative samples of each material specified indicating visual characteristics and finish. Include range samples if variation of finish is anticipated. Samples to be on representative backing with appropriate undercoating, 8.5 x 11" in size.
      a. Include manufacturer's full range of color and finish options if additional selection is required.
C. Quality Assurance/Control Submittals:
   1. Certificates:
      1) Indoor Air Quality Certificates:
         (a) Certify volatile organic compound content for each interior paint and coating
   2. Manufacturer's Instructions:
      a. Delivery, storage, and handling instructions for each material and product used
      b. Surface preparation, priming, and coating instructions for each paint product used
      c. Maintenance and cleaning instructions

1.4 QUALITY ASSURANCE

A. Surface Burning Characteristics:
   1. Fire Retardant Finishes: Maximum 25/450 flame spread/smoke developed index when tested in accordance with ASTM E84.

1.5 ENVIRONMENTAL REQUIREMENTS

A. Store and apply materials in environmental conditions required by manufacturer's instructions.

PART 2 PRODUCTS

2.1 PAINTS AND COATINGS

A. Manufacturers:
   1. Benjamin Moore
   2. Sherwin Williams
   3. Tnemec Coatings
   4. International Protective Coatings
   5. Or Approved Equal

2.2 COLORS

A. Pipe bollards: "Safety Yellow" per ANSI Z535.1
B. Filter building recycled water pipe banding: Sherwin Williams "Mandarin" or Approved Equal
C. Interior building walls and ceiling: as indicated
D. Flashings and miscellaneous metals: match adjoining surface

2.3 COMPONENTS

A. Coatings: Ready mixed except field catalyzed coatings of good flow and brushing properties, capable of drying or curing free of streaks or sags.
   1. Interior Flat and Non-Flat Paints: Maximum volatile organic compound content in accordance with GS-11.
   2. Interior Anti-Corrosive Paints: Maximum volatile organic compound content in accordance with GC-03.
B. Accessory Materials: Linseed oil, shellac, turpentine, paint thinners, solvents, etching primer, tri-sodium phosphate, phosphoric acid solution and other materials required to achieve finishes specified.

PART 3 EXECUTION

3.1 EXAMINATION

A. Verify substrate conditions are ready to receive Work.
B. Measure moisture content of porous surfaces using electronic moisture meter. Do not apply finishes unless moisture content is less than 15 percent.

3.2 PREPARATION

A. Correct minor defects and clean surfaces affecting work of this Section.
B. Remove electrical plates, hardware, light fixture trim, escutcheons, and fittings prior to preparing surfaces or applying finishes.
C. Galvanized Surfaces: Remove surface contamination and oils and wash with solvent. Apply coat of etching primer.
D. Concrete and Unit Masonry Surfaces Scheduled to Receive Paint Finish: Remove foreign matter. Remove oil and grease with solution of tri-sodium phosphate, rinse well and allow to dry.

E. Uncoated Steel and Iron Surfaces: Remove scale by wire brushing, sandblasting, and clean by washing with solvent. Apply treatment of phosphoric acid solution. Prime paint after repairs.
F. Shop Primed Steel Surfaces: Sand and scrape to remove loose primer and rust. Clean surfaces with solvent. Prime bare steel surfaces.
G. Interior Wood Items to Receive Paint Finish: Wipe off dust and grit prior to priming. Seal knots, pitch streaks, and sappy sections with sealer. Fill nail holes and cracks after primer has dried; sand between coats.

3.3 APPLICATION

A. Sand wood and metal surfaces lightly between coats to achieve required finish.
B. Prime concealed surfaces of interior woodwork with primer paint.
C. Finishing Mechanical and Electrical Equipment:
   1. Refer to Section 16050 (Common Work Results for Electrical) for schedule of color coding, identification banding of equipment, duct work piping, and conduit.
   2. Paint banding to identify all new Recycled water pipe within Filter Building. Refer to Section 15793 (Recycled Water System Piping and Specialties).
      a. Place bands:
         1) At 20 feet maximum centers
         2) Along continuous lines
         3) At changes in direction
         4) At changes of elevation
      b. Band width:
         1) Piping up to 8 inches diameter: 2 inches minimum
         2) Puping 8 inches to 12 inches: 4 inches minimum
      c. Band color: per paragraph 2.1A of this Section 09900.
   3. Paint shop primed equipment.
   4. Paint sheet metal flashing.
   5. Prime and paint insulated and exposed pipes, insulated and exposed ducts, hangers, brackets, collars and supports, support structures except where items are prefinished.
   6. Paint exposed conduit and electrical equipment occurring in finished areas.
   7. Paint both sides and edges of plywood backboards.
   8. Reinstall electrical cover plates, hardware, light fixture trim, escutcheons, and fittings removed prior to finishing.
D. Cleaning: As work proceeds, promptly remove finishes where spilled, splashed, or spattered.

END OF SECTION

DIVISION 10

SPECIALTIES

SECTION 10440

INTERIOR SIGNAGE

PART 1 GENERAL

1.1 SUBMITTALS

A. Product Data:
   1. Interior signs
B. Samples:
   1. Interior signs:
      a. Manufacturer's standard color choices

1.2 QUALITY ASSURANCE

A. Regulatory Requirements:
   1. ADA
   2. CCR Title 24

PART 2 PRODUCT

2.1 MATERIALS

A. Signs: Comply with ADA, CCR Title 24.
B. Fire Extinguisher Signs: See Section 10520 (Fire Protection Specialties)

PART 3 EXECUTION

3.1 INSTALLATION

A. Signs: Comply with ADA, CCR Title 24.

END OF SECTION

SECTION 10450

ACCESS CONTROL SYSTEM

PART 1 GENERAL

1.1 SUMMARY

A. Section includes:
   1. ReadyKey Pro Access Control system access controllers, control devices, and associated equipment.
      a. Note: Owner will provide support computer and software

1.2 REFERENCES

A. UL 294	Access Control Systems Units
B. FCC	Class A digital device, pursuant to Part 15 Radio Frequency Devices standard
C. NFPA 70	National Electric Code

1.3 DEFINITIONS

A. Access Control System: Comprises of a PC Based Host, Access Control Software, Access Controllers and/or Access Control Devices
B. Access Control Software: Usually contains tools for:
   1. Data acquisition and change.
   2. Card Creation and Layout.
   3. The Control of its own system components.
C. Access Controllers: Machine aided control of access rights and the granting or denying of physical access.
D. Access Control Devices: Refers to doors and readers, and other opening door elements and sensors.

1.4 SUBMITTALS

A. Product Data:
   1. Manufacturer's data, user and manuals for all equipment required for complete access control system
B. Shop Drawings:
   1. System device locations on architectural floor plans.
   2. Full Schematic of system, including wiring information for all devices
C. Quality Assurance/Control Submittals:
   1. Manufacturer's Instructions:
      a. Access control system installation
   2. Qualification Statements:
      a. Evidence of installer qualifications listed in paragraph 1.5B.1
D. Installation, Operation, and Maintenance Manuals:
   1. Proximity Card Readers, modules, power supplies, door kits and associated equipment required for a complete working access control system
   2. Wiring and connection diagrams

1.5 QUALITY ASSURANCE

A. Access Control System provided shall be compatible with Owner's current access control system.
B. Installer:
   1. Minimum of five years experience installing access control systems.
   2. Have a service facility within 60 miles of Owner's facility.

1.6 DELIVERY, STORAGE, AND HANDLING

A. Deliver materials in manufacturer's original, unopened, undamaged containers; and unharmed original identification labels.
B. Protect stored materials from environmental and temperature conditions following manufacturer's instructions.
C. Handle and operate products and systems according to manufacturer's instructions.

1.7 WARRANTY

A. Provide manufacturer's five year warranty covering access control products to repair and replace defective equipment.

PART 2 PRODUCTS

2.1 ACCEPTABLE MANUFACTURERS

A. Bosch ReadyKey Pro. No Substitutions.

2.2 READYKEY ACCESS CONTROL DEVICES

A. Reader Interface Modules used as a communication link between the Intelligent System Controller (ISC) and the card reader:
   1. Designed to meet UL294
   2. Compatible with personal identification number (PIN) keypads or access control system card readers and PIN keypads with either Wiegand Data1 or Data0 or clock and data reader communications
   3. Communicates with LNL-500 through a two-wire RS-485 configuration.
   4. 2-Door Reader Interface Module Model Number LNL-1320:
      a. Two Request-to-exit (REX) inputs normally-open (NO)
      b. Two door inputs normally-closed (NC)
      c. Two software configurable auxiliary inputs per reader
      d. One dedicated lock output per reader
      e. Two software configurable auxiliary outputs per readers
   5. Door Reader Interface Module Model Number LNL-1300:
      a. Door and Request-to-exit (REX) inputs normally-open (NO)
      b. One lock output relay
B. Proximity Card Reader that uses a contactless smart card technology and proximity technology:
   1. Model Number ARD-R10 Mullion Reader:
      a. Transmit Frequency: 13.56 MHz
      b. Curved faceplate design
      c. Distinct audio and visual indicators
      d. Read Range: Up to 3.25″
      e. Dimensions: 1.9″ x 4.0″ x 0.9″

f. Power supply: 5 – 16 VDC
g. Current Requirements: 55mA average, 116 mA peak
h. Operating Temperature: -31 deg to 150 deg F
i. Designed to meet FCC Class A digital device, pursuant to Part 15 Radio Frequency Devices standard.

C. 4 Amp Power Supply with enclosure and charger:
1. Model Number RKAL-400ULX:
a. Converts 115VAC input into a non-power-limited 12VDC or 24VDC output
b. Accommodates up to two ReadyKey Pro modules
c. Tamp switch
d. Filtered and electronically regulated output
e. AC fail supervision
f. Class 2 rated
g. Enclosure: 12 in x 16 in x 4.5 in
h. Power Supply Dimensions: 4.25 in x 7 in x 1.75in
i. Power Supply: battery charger for sealed lead acid or gel batteries.
j. Supply: 4A continuous supply current at 12VDC

D. Batteries ELK1270

E. 2 door kit Model LNL-2DRKIT Controller Kit:
1. Power supply
2. LNL-500 Intelligent system controller
3. LNL-1320 Dual Reader Interface Module

F. TCP IP Card LNL-ETHlan-micro-Serial Server to easily enable any device to work with a serial interface network:
1. 10/100 Ethernet/Fast Ethernet applications with full modem control and 10/100 RJ45 Network interface.
2. Diagnositc LEDS
3. Serial: 1 DB25 Serial port
4. Power: 110VAC input, 5VDC output

PART 3 EXECUTION

3.1 EXAMINATION

A. Examine areas to receive devices and notify Owner of adverse conditions affecting installation or subsequent operation.
B. Do not begin installation until unacceptable conditions are corrected.

3.2 PROTECTION

A. Protect devices from damage during construction.

3.3 INSTALLATION

A. Install controllers and devices in accordance with manufacturer's instructions at locations indicated per NEC standards.
B. Ensure selected location is secure and offers protection from accidental damage.
C. Ensure selected location is free from sources of electrical and electromagnetic interference.
D. Ensure connections are sealed properly to prevent moisture infiltration.
E. Ensure power source is protected against accidental shutoff.

3.4 FIELD QUALITY CONTROL

A. Test snugness of all circuit board mounting screws.
B. Test proper operation of controllers and readers. Present card to the readers to validate if reader functions correctly.
C. Determine and report all problems to Owner.
D. Manufacturer's Field Services:
   1. Manufacturer's representative shall verify and provide certification that access control system was installed properly.
      a. Improper connections/installations shall be corrected by Contractor at no additional cost to Owner.

3.5 ADJUSTING

A. Make proper adjustment to controller, extensions, and readers for correct operation in accordance with manufacturer's instructions.

END OF SECTION

SECTION 10500

LOCKERS

PART 1 GENERAL

1.1 SUMMARY

A. Section Includes:
   1. Metal Lockers
   2. Benches

1.2 SUBMITTALS

A. Product Data:
   1. Lockers
   2. Benches
B. Samples:
   1. Standard Color samples
C. Quality Assurance/Control Submittals:
   1. Manufacturer's Instructions:
      a. Locker specifications and drawings

1.3 PRODUCT DELIVERY, STORAGE AND HANDLING

A. Deliver products in original containers.
B. Unload materials carefully and store in a safe, dry area.

PART 2 PRODUCTS

2.1 MANUFACTURERS

A. Lockers:
   1. Interior Steel Equipment
   2. Lyon Metal Products
   3. Republic Steel Corporation
   4. Worley Locker Company
   5. Or Approved Equal
B. Benches:
   1. Penco
   2. Robinson Steel Company
   3. Or Approved Equal

2.2 MATERIALS

A. Lockers:
   1. Full lockers: 12″ wide x 18″ deep x 72″ high
   2. ADA accessible full lockers: 12″ wide x 18″ deep x 72″ high
B. Benches:
   1. Shall be ADA compliant, have a maple hardwood top, mounted on heavy duty steel pedestals, and have a powder coat finish. Each bench shall have an ADA compliant backrest. Bench size shall be 42" long x 20" wide x 17½" high x 1¼" thick.

2.3 LOCKER CONSTRUCTION

A. Door Frames:
   1. Shall not be less than 16-gauge steel. All parts to be channel formation securely welded together. Sides of frame shall form a continuous door strike.

B. Doors:
   1. Shall be 16 gauge minimum steel with full depth single flanges top and bottom and additional return flanges on strike and hinge sides.

C. Back and Sides:
   1. Shall be 24 gauge minimum. Exposed ends to have 16 gauge panel ends over standard locker ends.

D. Locking Devices and Lifting Trigger:
   1. Shall be sturdy zinc die cast material and chrome plated. The lifting trigger is to be supplied with rubber stoppers for sound deadening. Provide a padlock attachment with 3/8" diameter hole. The handle design must be free of openings or surfaces that permit leverage for vandalism.

E. Finish:
   1. All steel parts shall be thoroughly cleaned and treated to prevent corrosion and to insure proper bonding of the finish. Lockers shall be given a heavy coat of high quality enamel with locker front being painted electrostatically, and baked at 300 degrees Fahrenheit.

F. Number Plate:
   1. Each locker shall have a polished aluminum number plate with black numerals not less than 1/2" high. Plate to be attached with split rivets.

G. Ventilation:
   1. Door shall be louvered.

PART 3 EXECUTION

3.1 INSPECTION

A. Examine receiving area and verify the following:
   1. Location and dimensions of backing and structural supports are correct.
   2. Conditions are otherwise satisfactory for proper installation.

3.2 INSTALLATION

A. Install per manufacturers specifications and drawings.

3.3 ADJUSTMENT

A. Adjust to insure proper operation of all doors.

END OF SECTION

SECTION 10520

FIRE PROTECTION SPECIALTIES

PART 1 GENERAL

1.1 SUMMARY

A. Section Includes:
1. Fire extinguishers, fire extinguisher cabinets, brackets, and signs.

1.2 REFERENCES

A. NFPA 10 Standard for Portable Fire Extinguishers

1.3 SUBMITTALS

A. Product Data:
1. Fire Extinguishers
2. Fire Extinguisher cabinets
3. Signs

1.4 QUALITY ASSURANCE

A. Standards: Fabricate and label fire extinguishers to comply with requirements of NFPA 10.
B. Regulatory Requirements:
1. Comply with ADA, CCR Title 24.
2. Fire Extinguishers: Comply with CCR Title 19, Division 1, Chapter 3. Provide extinguishers listed and labeled for type, rating, and classification by an independent testing agency acceptable to authorities having jurisdiction.
3. Cabinet Fire Ratings: Provide fire-listed and labeled cabinets, meeting UBC 7-5, where installed in fire-rated walls.

PART 2 PRODUCTS

2.1 PORTABLE FIRE EXTINGUISHERS

A. Multi-Purpose Dry Chemical Type:
1. Manufacturers:
a. J.L. Industries
b. Larsen’s Manufacturing Co.
c. Potter-Roemer Div. of Smith Industries
d. Or Approved Equal
2. Capacity: UL rated 2A:10B:C; 5 pound nominal capacity, refillable type, with pressure gage, in manufacturer's standard red enameled steel container. Install all extinguishers fully charged and tagged.

2.2 CABINETS

A. Non-Security Cabinets:
1. Manufacturer: J.L. Industries, Larsen's, Potter-Roemer, or Approved Equal.
2. Door and Cabinet Trim Material: Galvanized steel sheet, factory primed and painted
3. Color: standard red
4. Door Style: Manufacturer's standard center glass panel with frame.
5. Door Glazing: Manufacturer's standard clear break glass.

6. Door Hardware: Manufacturer's standard.
   a. Hinge: Concealed or continuous-type hinge, permitting door to open 180 degrees, finish to match door.
   b. Door Locks: Standard lock and break-glass hardware.
7. Cabinets in Fire-Rated Walls: Fire-rated to same rating as wall, labeled, meeting UBC 43-6.

2.3 BRACKETS

A. Utilitarian type, surface wall-mounted steel bracket, specifically designed to securely hold specified extinguisher, OSHA red enamel color; J.L Industries "MB Series"; Larsen's "B Series"; or Approved Equal. Provide bracket from same manufacturer as fire extinguisher.

2.4 SIGNS

A. Install signs at new fire extinguisher locations.
B. Signs: 0.100" high-impact plastic with permanently bonded image on two panels with over-laminate film. 1" side-flanged edges with pre-drilled mounting holes. 3D signs, projecting 45° from the wall. Accuform MFXG414 or Approved Equal.

2.5 FABRICATION

A. Fabricate cabinets, panels, and plates to sizes and functions required.
B. All doors, panels, and trim shall be free of oil canning; increase metal thickness or provide laminated, noncombustible, concealed backing material as required.
C. Form exposed metal edges of trim and door stiles by welding, filling and grinding smooth to touch and appearance.
D. Glass Mounting: Fully concealed. Exposed trim or glass stops not acceptable.
E. Fabricate cabinet interior and concealed sheet components of galvanized sheet steel, 20-gage minimum. Factory finish all metal exposed when door is open with electrostatically applied white epoxy paint.
F. Pre-drill holes for anchorage. Provide all cutouts required at interior of cabinet. Exposed fasteners on face of cabinets or panels are not allowed.

PART 3 EXECUTION

3.1 EXAMINATION

A. Examine the substrate in which the cabinets are to be installed. Verify rough openings for cabinets are correctly sized and located. Do not begin installation until unsatisfactory conditions have been resolved.

3.2 INSTALLATION

A. Install cabinets where indicated.
B. Mount extinguishers on the wall or in cabinets such that the top of the extinguisher is no more than five feet above floor level. Provide all blocking and backing required for cabinet installation.

3.3 CLEAN AND TOUCH-UP

A. Touch up all abraded enamel finish on extinguishers and cabinets with paint of exact match in color and sheen, as acceptable to Owner. Paint all exposed fastener heads to match appearance of adjacent surface.
B. Clean glass, exposed surfaces, and interior of cabinets.

C. Clean extinguishers and cabinets with non-toxic cleaners. Do not remove or conceal labels or instructions attached to extinguishers.

END OF SECTION

DIVISION 13

SPECIAL CONSTRUCTION

SECTION 13120

PRE-ENGINEERED METAL BUILDING

PART 1 GENERAL

1.1 SUMMARY

A. Related Sections:
   1. Section 09900 (Paints and Coatings)

1.2 REFERENCES

A. ASTM A 36	Standard Specification for Carbon Structural Steel
B. ASTM A 570	Standard Specification for Steel, Sheet and Strip, Carbon, Hot-Rolled, Structural Quality
C. ASTM A 572	Standard Specification for High-Strength Low-Alloy Columbium-Vanadium Structural Steel
D. ASTM A 611	Standard Specification for Structural Steel, Sheet, Carbon, Cold-Rolled
E. ASTM A-792	Standard Specification for Steel Sheet, 55 % Aluminum-Zinc Alloy-Coated by the Hot-Dip Process
F. ASTM A-924	Standard Specification for General Requirements for Steel Sheet, Metallic-Coated by the Hot-Dip Process
G. ASTM B 209	Standard Specification for Aluminum and Aluminum-Alloy Sheet and Plate
H. ASTM B 221	Standard Specification for Aluminum and Aluminum-Alloy Extruded Bars, Rods, Wire, Shapes, and Tubes1
I. ASTM D 635	Standard Test Method for Rate of Burning and/or Extent and Time of Burning of Self-Supporting Plastics in a Horizontal Position
J. ASTM D 1929	Standard Test Method for Ignition Properties of Plastic
K. ASTM D 2843	Standard Test Method for Density of Smoke from the Burning or Decomposition of Plastics
L. ASTM E 84	Standard Test Method for Surface Burning Characteristics of Building Materials
M. AWS D1.1	Structural Welding Code
N. CBC, Chapter 16, Division III	Wind Design
O. CBC, Chapter 16, Division IV	Earthquake Design
P. CBC, Section 1616	Definitions
Q. CBC, Section 1627	Definitions
R. CBC, Table 16 A-C	Minimum Roof Live Loads
S. MBMA Metal Building Manufacturer's Association	2006 Metal Building System Manual with 2010 Supplement
T. UL 580	Test for Uplift Resistance of Roof Assemblies

1.3 SYSTEM DESCRIPTION

A. Design Requirements:
1. Metal building shall be a rigid frame, clear span structure with a roof slope and eave/parapet as indicated. Rigid frame columns may be either straight or tapered.
2. Design of metal building and components shall resist the dead load, the live load, and the combination of these loads as set forth in the CBC
3. Roof Live Load: Refer to CBC Table 16A-C
4. Wind Load: Wind design shall be in accordance with CBC, Chapter 16, Division III. Wind stagnation pressure at standard height of 33 feet shall be determined using a basic wind speed of 80 mph. The combined height, exposure and gust factor coefficient shall be determined using Exposure C as defined in Section 1616 of CBC.
5. Earthquake Load: Earthquake loads shall be in accordance with CBC, Chapter 16, Division IV.
6. Dead Load: All building components, building accessories, attached mechanical and electrical equipment and accessories, including but not limited to the following:
   a. Roof System
   b. Wall System
   c. Framing
   d. Access doors
   e. Heat Pumps
   f. Sectional doors
   g. Rigid insulation
   h. Additional roof dead load (lights, conduit, mechanical systems): 2.5 psf
   i. Additional wall dead load (wall-mounted equipment): 3.0 psf
7. Floor Slab Anchoring:
   a. Main building frame column centers shall be located equal distance between the concrete beam edges in the concrete floor
   b. Main building frame column base plates shall be of a size and bolt pattern such that the concrete reinforcement requires no greater deflection than ¼ inch
   c. Minimum clearance between anchor bolts and concrete floor slab edges shall be maintained as indicated
8. Framed Openings:
   a. Accommodate building components, mechanical and electrical equipment, and other accessories indicated.
   b. Provide shapes of proper design and size that are reinforced to carry all imposed loads, including loads and vibrations from equipment provided under mechanical and electrical work.
   c. Make weather tight.
9. Wall and Roof Penetrations (3-inch diameter and smaller):
   a. Accommodate pipe, conduit, and mechanical and electrical equipment that penetrate the roof or walls.
   b. Provide shapes of approved size and reinforce as required
   c. Make weather tight.
10. Mounting of Equipment: Accommodate all equipment boards, conduits, fixtures, and accessories to be mounted to the building

B. Performance Requirements:
   1. Metal building components shall be capable of supporting design loads without permanent deformation, loss of watertightness, or disengagement of any part of installation

1.4 SUBMITTALS

A. Product Data:
   1. Pre-engineered metal building
      a. Sheet Metal Panels
      b. Sealing Materials
B. Shop Drawings:
   1. Erection drawings and erection manuals showing complete erection layouts, installation instructions, and details of connections. Details and layouts shall show the steel framing location, lengths, and markings of panels and other component parts to correspond with sequence and procedure for erection.
   2. Details for mounting equipment boards, conduits, fixtures, and accessories
   3. Note: favorably reviewed Shop Drawings shall be used for PRMD permit appication
C. Samples:
   1. Paint samples of all paint/coating systems required herein
D. Quality Assurance/Control Submittals:
   1. Design Data:
      a. Engineered stamped drawings and engineered stamped structural design analysis for all structural components. Stamp shall be that of a Structural Engineer registered in the state of California.
   2. Test Reports:
      a. Mill test reports for primary and secondary framing
   3. Certificates:
      a. Welders certificates
      b. Manufacturer's certification that roof system meets UL 580, Class 90 wind uplift rating
   4. Manufacturer's Instructions:
      a. Painting manufacturer's surface preparation instructions for all components of pre-engineered metal building
      b. Painting manufacturer's application instructions for prime coat and finish coat systems

1.5 QUALITY ASSURANCE

A. Qualifications:
   1. Welder Certifications: Operators shall be qualified as prescribed by AWS D1.1
   2. Metal building shall be erected by one of the following:
      a. A builder authorized by the manufacturer
      b. The building manufacturer's crew
   3. A Structural Engineer registered in the state of California shall design the metal building.

1.6 DELIVERY, STORAGE, AND HANDLING

A. Packing, Shipping, Handling, and Unloading:
   1. Deliver prefabricated components, structural members, sheets, panels, and other manufactured items so that they will not be damaged, marred or deformed

B. Acceptance at Site:
   1. Materials having defects or damages that affect appearance, serviceability or use will be rejected
C. Storage and Protection:
   1. Store prefabricated components, structural members, sheets, panels, and other manufactured items so that they will not be damaged, marred, or deformed
   2. Stack materials on platforms or pallets, covered with tarpaulins or other weather-tight ventilated covering
   3. Store metal sheets and panels so water accumulation will drain freely. Do not store sheets and panels in contact with other materials that might cause staining.
   4. Store material to be readily accessible, with factory markings visible

1.7 WARRANTY

A. Provide manufacturer's standard warranty for the following:
   1. 25-year structural
   2. 25-year weather tightness
   3. 25-year exterior coating
   4. 3-year material and workmanship

PART 2 PRODUCTS

2.1 MANUFACTURERS

A. Pre-Engineered Metal Building:
   1. Butler
   2. CBC
   3. American Steel Buildings
   4. Or Approved Equal

2.2 MATERIALS

A. Steel Framing and Structural Steel Members:
   1. All hot-rolled steel plate used in fabrication of rigid frames shall conform to the requirements of ASTM A-572/A572M. Minimum yield point shall be 50,000 psi.
   2. All hot-rolled steel sheets shall conform to the requirements of ASTM Specification A 570, Grade 50
   3. Beyond ¼-inch and up, flange material (bars) shall be ASTM A 36 modified to 50 ksi yield
B. Sheet Metal Roofing and Walls:
   1. General:
      a. Flashing, trim, and closures shall be of the same material, gage and finish as adjacent wall and roof panels
      b. Form or mold closure strips to match configuration of roofing or siding
      c. Provide closures to ensure weather tight construction
      d. Cut panels square at each end
      e. Form panels from steel conforming to ASTM A-792 and ASTM A-924
      f. Trim:
         1) Provide base trim at sill

2) Provide trim at rakes, including peak and corner assemblies, eaves, corners, bases, framed openings, and as required to provide weather tightness and a finished appearance

g. Rigid insulation:
1) 2 inch thick rectangular sheets
2) Minimum R value 14
3) Foil faced

2. Roof Panels:
a. Roof panels shall be fabricated with the grade of steel and configuration of cross section capable of withstanding design load conditions without exceeding specified stress and deflection limitations
b. Panels shall be continuous in length from ridge to gutter
c. Cross section shall be appropriate for the roof slope, as recommended by the manufacturer and shall be watertight and categorized as either aesthetic or non-aesthetic
d. Use only for the section of roof not visible from around the exterior of the building
e. Manufacture side joints with factory-applied sealant for field seaming
f. Roof system shall be tested and certified to meet UL 580, Class 90 wind uplift rating with supports at maximum 5 feet 0 inch on center

3. Wall Panels:
a. Panels shall be box-rib type with trapezoidal ribs and smooth corrugations oriented vertically on the building

2.3 ACCESSORIES

A. Roof:
1. Gutters and Scuppers:
a. Roll-formed, 16-gage galvanized steel sheets with fasteners and joint sealant
b. Sealant: Mastic

2. Down Spouts:
a. 24-gage galvanized steel
b. seamless

2.4 FABRICATION

A. General:
1. Provide cutouts and supplemental reinforcement as required to accommodate materials and work specified in other sections of the specification
2. Dissimilar materials that are not compatible with adjoining materials when exposed to moisture shall be separated by means of coatings, gaskets, or other effective means

B. Steel Framework Fabrication:
1. Columns, girders, related framing components, and appurtenances shall be shop-fabricated complete, with connection holes for attachment of primary and secondary framing members, bracing, and appurtenances
2. Plates connecting column sections, girder sections, and column-girder connections shall be flush
3. Framing, purlins, girts, struts and miscellaneous steel members required for attachment of pre-engineered metal building panels to building structure shall be roll-formed members complying with either ASTM A 570 or ASTM A 611
4. Members shall have factory-punched holes and shall be furnished complete with angle clips and fastenings required for attaching structure

5. Bolted connections shall use either ribbed or high-tensile steel bolts as appropriate for each connection
6. Welding shall be in accordance with AWS D1.1

2.5 FINISHES

A. General: All pre-engineered metal building components shall be shop-primed and painted
B. Structural Steel Framing, Members and appurtenances, and Service and Sectional Doors:
   1. Surface Preparation: In accordance with the printed instructions of the primer coat manufacturer
   2. Shop Priming: One coat compatible with finish coat system
C. Sheet Metal Roofing and Walls:
   1. Surface Preparation: In accordance with the printed instructions of the primer coat manufacturer
   2. Shop Priming: 0.2 mil corrosion resistant primer baked on
   3. Exterior Finish Coat System: 0.8-mil PVF_2 (polyvinylidene fluoride) finish coat, total of 1 mil dry film thickness
   4. Interior Finish Coat System: 0.15 mil corrosion resistant primer with 0.35 mil finish coat
D. Exposed screws/fasteners:
   1. Apply approved sealant to exposed surfaces after installation and field coat to match adjacent finish.
E. Color and Gloss:
   1. Exterior:
      a. Roof: Terra Brown, low-gloss fluoropolymer coating
      b. Wall panels: Country Wheat, low-gloss fluoropolymer coating
      c. Gable trim, eave trim, gutter, downspouts: Country Wheat, low – gloss fluoropolymer coating

PART 3 EXECUTION

3.1 EXAMINATION

A. Site Verification of Conditions:
   1. Items under this specification shall not be installed until the concrete slab has had a minimum of 21 days of curing time or until the concrete has attained a minimum of 75 percent of rated strength, whichever is last

3.2 ERECTION

A. General:
   1. Install metal building system components following manufacturer's instructions and complying with requirements shown on approved shop drawings
B. Structural Frames:
   1. Erect true to line, level and plumb, rigid and secure
   2. Level the base plates to true even plane with full bearing to supporting structures
C. Bracing: Install bracing at locations to suit manufacturer provided bracing locations do not conflict with any mechanical, electrical, or water quality monitoring panels
D. Framed Openings: Securely attach framed openings to structural frame
E. Steel Framing:
   1. Place and secure in accordance with requirements of manufacturer's instructions and Shop Drawings.

2. Place on supporting work, adjust and align in accurate locations and spacing before permanently bolting in final location
3. Install bridging simultaneously with framing erection before any construction loads are applied. Anchor end of bridging lines at top and bottom chords where terminating at wall or beams.
4. Provide and install temporary bridging, connections and anchors to ensure lateral stability during construction

F. Roof and Walls:
1. General:
   a. Apply panels, flashing, gutters and other roof and wall items for a neat and weather tight enclosure
   b. Arrange and nest side lap joints so winds will blow over, not into, lapped joints. Lap ribbed or fluted sheets to be lapped one full rib corrugation
   c. Avoid "panel creep" or application not true to line
   d. Protect factory finishes from damage
   e. Install approved closures to exclude weather:
      1) Flash and seal roof panels at gutter and rake perimeter of all openings through roof
      2) Flash and seal wall panels at perimeter of all openings, under eaves and gable trims, and along lower panel edges
      3) Install screw fasteners with power tools having controlled torque adjusted to compress tightly without damage to screw heads or panels
      4) Use rubber washers with screws exposed to weather to provide weather-tight seal
2. Roof:
   a. Secure roof system components with mechanical fasteners or screws (no glue)
   b. Install roof panels with panels running from ridge to gutter line.
   c. Gutters:
      1) Install downspouts as indicated
      2) Overlap flashing a minimum of 12 inches and apply mastic sealant at laps
3. Walls:
   a. Align bottoms of panels and fasten with manufacturer's recommended and supplied anchorage devices. Fasten flashings and trim around openings with self-tapping screws.
   b. Fasten door frames with machine screws or bolts

G. Accessories:
1. Install gutters, downspouts, flashing, trim, ridge covers, roof curbs, pipe flashings, closure strips, roof jacks, and other accessories and sheet metal items in accordance with manufacturer's recommendations for positive anchorage to building and weather tight mounting

H. Touch up abrasions, marks, skips or other defects in shop-primed or factory-finished painted surfaces with same type of material as used for shop primer or factory painting.

END OF SECTION

SECTION 13121

PRE-ENGINEERED METAL BUILDING - ALUMINUM WINDOWS AND ENTRANCES

PART 1 GENERAL

1.1 SUMMARY

A. Section Includes:
   1. Aluminum windows, storefront framing systems and entrance doors with accessories.
B. Related Sections:
   1. Section 07900 (Sealants)
   2. Section 08710 (Finish Hardware)

1.2 REFERENCES

A.	ANSI/AAMA 101	Voluntary Specifications for Aluminum and PVC Prime Windows and Glass Doors
B.	ASTM B221	Standard Specification for Aluminum and Aluminum-Alloy Extruded Bars, Rods, Wire, Profiles, and Tubes
C.	ASTM B209	Standard Specification for Aluminum and Aluminum-Alloy Sheet and Plate
D.	ASTM A36	Standard Specification for Carbon Structural Steel
E.	ASTM D2287	Standard Specification for Nonrigid Vinyl Chloride Polymer and Copolymer Molding and Extrusion Compounds
F.	ASTM C509	Standard Specification for Elastomeric Cellular Preformed Gasket and Sealing Material
G.	ASTM A123	Standard Specification for Zinc (Hot-Dip Galvanized) Coatings on Iron and Steel Products
H.	ENERGY STAR	Energy Star Qualifications for Windows
I.	FS QQ-S-775D	Steel Sheets Carbon Zinc Coated (Galvanized) by the Hot Dip Process
J.	FS TT-P-645A	Primer, Paint, Zinc-Molybdate, Alkyd Type
K.	NFPA 252	Fire Tests of Door Assemblies
L.	UL 10B	Standard for Fire Tests of Door Assemblies

1.3 SUBMITTALS

A. Product Data:
   1. Windows, doors, framing, attachments, reinforcement, and glazing
      a. Include manufacturer's standard profiles of members
B. Shop Drawings:
   1. Indicate frame configuration, anchor types and spacing, location of cutouts for hardware, reinforcement, and finish. Indicate door frame elevations, internal reinforcement, closure method, and cut outs for glazing. Show jamb, mullion, and head details keyed to the frame elevations, drawn to scale, including partition types required at each frame. Indicate partition type dimensions and components and cross reference to partition types indicated.
C. Quality Assurance/Control Submittals:
   1. Manufacturer's Instructions:
      a. Windows, doors, framing, attachments, reinforcement, and glazing installation

1.4 PERFORMANCE

A. Thermal Movements: Design, fabricate, and install all components capable of withstanding thermal expansion and contraction movements for the ambient temperatures from 20 degrees to 120 degrees F. The glass shall not break owing to thermal or other stresses.
B. Seismic Movement: Design, fabricate, and install the aluminum storefront frame system and glass bite to accommodate 3/4-inch +/-movement in any horizontal direction without failure or detrimental effect to the frame or glass.
C. Windows: Designed and fabricated to meet ANSI/AAMA 101, Class HC65. Windows shall be Energy Star Certified.
D. Acoustical Windows: Designed, fabricated and installed to achieve STC 42 minimum.

1.5 DELIVERY, STORAGE, AND HANDLING

A. Protect the finished surfaces from damage and abrasion during delivery, storage, and handling. Any surface having noticeable and objectionable damage or abrasion, as determined by Owner will be rejected. Field touch-up painting of damaged finish is not acceptable.

1.6 WARRANTY

A. Warrant for manufacturer's standard warranty period or 10 years from the date of Substantial Completion, whichever is longer, that the window walls and entrances shall be free of defects in material and workmanship and will not leak water, deteriorate excessively, or otherwise fail to perform as required.

PART 2 PRODUCTS

2.1 MANUFACTURES

A. U.S. Aluminum Corporation
B. Anemostat "LoPro" and "Advanced Architectural Frames"
C. Kawneer
D. Arcadia
E. Anemostat
F. Any Energy Star Certified Window Manufacturer
G. Or Approved Equal

2.2 MATERIALS

A. Extruded Aluminum: ASTM B221; 6063 alloy, T5 temper.
B. Sheet Aluminum: ASTM B209; 5005 alloy, H34 temper.
C. Steel Sections: ASTM A36; shapes to suit mullion sections.
D. Fasteners and Accessories:
   1. For fastening aluminum to aluminum, use aluminum or austenitic stainless steel fasteners and accessories.
   2. For fastening aluminum to other materials, use stainless steel or cadmium-plated steel fasteners and accessories. Provide anodic corrosion isolation where required.
   3. Do not use exposed fasteners, except where unavoidable for the application of hardware. Match the finish of the metal surrounding the fastener.
   4. Provide Phillips flathead machine screws for exposed fasteners.
E. Primer for Steel: FS TT-P-645A, AAMA standards; red or brown, for shop application and field touch-up.

F. Touch-Up Primer for Galvanized Surfaces: FS QQ-S-775D, AAMA standards.
G. Glazing Gaskets: Unless otherwise indicated, and at manufacturer's option, provide neoprene gaskets, Class SC; molded PVC gaskets complying with ASTM D2287; molded expanded neoprene gaskets complying with ASTM C509, Grade 4; or EPDM molded gaskets. Provide black color only.
H. Sealants: Comply with Section 07900 (Sealants).

2.3 FABRICATED COMPONENTS

A. General:
   1. Framing Members: Extruded aluminum, minimum 0.125-inch thick for main members and minimum 0.062-inch thick for secondary members. Provide with internal steel reinforcement where required for additional strength.
   2. Trim and Glazing Stops: Extruded or break-formed aluminum, minimum 0.050inch thick.
B. Aluminum Storefront System: Kawneer "Trifab VG 451T", Arcadia, Anemostat “LoPro” and “Advanced Architectural Frames”, U.S. Aluminum Corporation, or Approved Equal, wall system using shear block fabrication. Provide with internal steel reinforcement where required.
C. Aluminum Swinging Entrance Doors: Kawneer "350 Series" medium-stile entrance doors, Arcadia, U.S. Aluminum Corporation, Anemostat “LoPro” and “Advanced Architectural Frames”, or Approved Equal. Provide with 10-inch high bottom rail and accessories:
   1. Threshold: In compliance with ADA and CCR Title 24 for accessibility.
   2. Glazing Stops: 1/4-inch thick single glazed.
   3. Weatherstripping, Sill Sweep Strips: Manufacturer's standard type to suit application, black finish.
   4. Hardware: Refer to Section 08710 (Finish Hardware).

2.4 FABRICATION

A. Check openings and dimensions in the construction Work, and take accurate field measurements before fabrication. Coordinate installation tolerances to ensure proper fit of storefront and windows.
B. Fabricate units with main corners and intersections of frames and sash mortised and welded or riveted and permanently sealed to prevent any air or water leakage. Fabricate secondary joints similarly.
C. Provide mullions complete with anchors for support to structure and for installation of glass. Allow for erection tolerances, and provide for movements of glass due to thermal expansion and building deflections. Provide concealed reinforcing and stiffener as required.
D. Provide reinforcement for all finish hardware specified herein and in Section 08710 (Finish Hardware).
E. Entrance Doors: Fabricate with minimum 10-inch high door bottom rail plate of 0.125-inch thick aluminum for smooth, uninterrupted surface to meet ADA and CCR Title 24 requirements.

2.5 FINISH

A. Color and Finish: Match existing color and finish (dark bronze)
B. Concealed Steel Items: Galvanized in accordance with ASTM A123.
C. Apply one coat of bituminous paint to concealed aluminum and steel surfaces in contact with cementitious or dissimilar materials.

PART 3 EXECUTION

3.1 EXAMINATION

A. Examine the substrate in which the Work is to be performed. Do not proceed until unsatisfactory conditions are corrected. Start of installation means the Contractor has accepted the existing conditions.

3.2 INSTALLATION

A. Install windows, doors, storefront frames, glazing and hardware in accordance with manufacturer's instructions.
B. Use anchorage devices to securely attach frame assembly to structure.
C. Selectively place each component for best finish appearance by minimizing color differential between adjacent components. Eliminate all which have observable damages or imperfections.
D. Mill, cope, butt, and miter joints as necessary, and secure by mechanical devices with sealants or welding to ensure permanently watertight joints.
E. Set units plumb, level and true to line without warp or rack of frames. Anchor securely in place.
F. Provide a heavy coat of bitumastic paint at all aluminum surfaces in contact or potentially in contact with steel and other dissimilar metal.
G. See Section 07900 (Sealants) for sealant application requirements.

3.3 TOLERANCES

A. Variation from Plane: 0.03-inch per foot maximum or 0.25-inch per 30 feet, whichever is less.
B. Misalignment of Two Adjoining Members Abutting in Plane: 0.015-inch.

3.4 CLEANING, REPAIR AND TOUCH-UP

A. Remove protective material from prefinished aluminum surfaces.
B. Wash clean all components of door and storefront system using nonabrasive cleaner and apparatus.
C. Repair or replace all Defective components, including components having damaged paint finish and glazing which is broken, chipped, cracked, abraded, or damaged.
D. Remove excess sealant by moderate use of mineral spirits or other solvent acceptable to sealant manufacturer.

END OF SECTION

SECTION 13122

PRE-ENGINEERED METAL BUILDING - RIDGE VENTS

PART 1 GENERAL

1.1 SYSTEM DESCRIPTION

A. Performance Requirements:
   1. Lifting mechanism assembly shall open the vent damper when either the chain is released from the keeper or when the pull bar is drawn to a closed position via cables or hand crank(s). Damper shall open and close in a vertical direction and controlled with a guide rod.
   2. Entire ridge vent shall be weather resistant with a top diverter, end caps, and wind bands to direct rain away from the vent opening.
   3. Latch mechanisms or hand cranks shall hold the damper(s) in the closed position.
   4. Venting performance shall be as listed on the manufacturer's spec sheet and shall be based on providing intake air with the equivalent of 1½ times the ventilator open area.

1.2 SUBMITTALS

A. Product Data:
   1. All materials specified in this Section.
B. Shop Drawings:
   1. Show profiles, accessories, location, adjacent construction interface, and dimensions.
C. Quality Assurance/Control Submittals:
   1. Manufacturer's Instructions:
      a. Ridge vent installation

1.3 QUALITY ASSURANCE

A. Coordinate installation with roof sheeting and roof insulation manufacturer's instructions.

1.4 DELIVERY, STORAGE, AND HANDLING

A. Packing, Shipping, Handling, and Unloading:
   1. Materials shall be delivered in manufacturer's original packaging.
B. Storage and Protection:
   1. Store materials in a dry, protected, well-vented area.

PART 2 PRODUCTS

2.1 MANUFACTURERS

A. R & S Manufacturing and Sales Company, Inc.
B. MPVent
C. Or Approved Equal

2.2 RIDGE VENTS

A. Metal ridge vent size: 12″ x 10′ length. The roof ridge vent shall be preassembled from the manufacturer.
B. Screening: #2 mesh 19 gage galvanized steel screen, placed along the top opening of the vent.

C. Windbands, skirts, diverters, and end caps: minimum 26 gage galvanized or zincalume steel.
D. Internal braces and damper operator arms: minimum 18 gage A653 galvanized or A463 aluminized steel.

2.3 FINISHES

A. Shop Finishing:
   1. External visible parts shall be pre-coated silicone modified polymer (SMP) off-white finish. Internal braces, operator parts, bird screen, or trim shall be mill finish.

PART 3 EXECUTION

3.1 EXAMINATION

A. Verify that ridge vent installation will not disrupt other trades.
B. Verify that other trades with related work are complete before installing roof ridge vent(s).
C. Verify that the substrate is dry, clean, and free of foreign matter. Report and correct defects prior to any installation.
D. Mounting surfaces shall be straight and secure; substrates shall be of proper width.

3.2 INSTALLATION

A. Comply with the ridge vent manufacturer's installation instructions.
B. Install ridge vents as single units.
C. Install ridge vents no closer than 5'0" to the endwall.
D. Provide mechanical fasteners, sealants, and closures consistent with the roof requirements.
E. The end cap flashing may be field cut to match roof pitches up to 2:12.

3.3 FIELD QUALITY CONTROL

A. Site Tests:
   1. Test the vents in open position, dampers in closed position for proper operation.

END OF SECTION

SECTION 1312

PRE-ENGINEERED MEZZANINE SYSTEM

PART 1 GENERAL

1.1 REFERENCES

A. American Institute of Steel Construction (AISC)	Specification for the Design, Fabrication and Erection of Structural Steel for Buildings
B. AISC -Steel Joist Institute	Standard Specifications for Open Web Steel Joists, Longspan Steel Joists and Deep Longspan Steel Joists
C. American Society for Testing and Materials (ASTM) A36 or A992/572	Grade 50 - Structural Steel
D. ASTM A307	Carbon Steel Externally Threaded Standard Fasteners
E. ASTM A325	High Strength Bolts for Structural Steel Joints
F. ASTM A653	Steel Sheet, Zinc-Coated (Galvanized) or Zinc-Iron Alloy-Coated (Galvannealed) by the Hot Dip Process
G. ASTM A500	Cold-Formed Welded and Seamless Carbon Steel Hollow structural sections in Rounds and Shapes
H. ASTM A1008	Specification for Steel, Cold-Rolled, Carbon, Structural
I. American Welding Society (AWS) D1.1	Structural Welding Code
J. National Association of Architectural Metal Manufacturers (NAAMM)	Metal Bar-Grating Manual

1.2 SYSTEM DESCRIPTION

A. This Section specifies pre-engineered free-standing steel mezzanines consisting, in general, of columns, framing, decking, hardware, accessories and finish, including design and construction of footings, as needed. The mezzanine shall not require cross bracing in any direction and shall be a clear span design.
   1. Footing design shall be based on reference drawings.

B. Design Criteria:
   1. System shall be designed for 125 pounds per square foot live load.
   2. Deflection of all components under full live load shall not exceed 1/240 of span.
   3. System shall be designed for 8′-0″ clear height from floor.

1.3 SUBMITTALS

A. Product Data:
   1. Mezzanine system

B. Shop Drawings:
   1. Mezzanine system, including:
      a. Engineering design calculations and plans, stamped and sign by Structural Engineer. Engineering calculations shall include column base loads, footing load, anchor bolt

sizing and seismic calculations verifying that the mezzanine system shall be designed to withstand horizontal forces as required for the seismic zone at the Site.

b. Show size and height of mezzanine; type of decking; length and number of framing members; column location; orientation of base plates (concrete footings, if required); and location and type of accessories.

C. Quality Assurance/Control Submittals:
1. Certificates:
a. Welders Certifications
2. Manufacturer's Instructions:
a. Mezzanine system installation/erection
3. Design Data:
a. Concrete mix design, if required

1.4 QUALITY ASSURANCE

A. Qualifications:
1. System Design: shall be stamped and signed a Professional Engineer registered in the State of California experienced in the design of mezzanines and in accordance with AlSC and AlSC-SJI specifications.
2. All welding performed by the mezzanine supplier shall be made by certified welders.

B. Regulatory Requirements:
1. Mezzanine system (handrails, kick plate, stairways, etc.) shall conform to all applicable codes and regulations.
2. Mezzanine system manufacturer shall comply with all applicable codes specified by the Uniform Building Code (UBC) or International Building Code (IBC).
3. CalOSHA and OSHA (California and Federal Occupational Safety & Health Administration) regulations shall be met or exceeded in the design.
4. Contractor shall perform all torque testing as required by building permit conditions and manufacturers' installation instructions and recommendations.

1.5 DELIVERY, STORAGE, AND HANDLING

A. Acceptance at Site:
1. Inspect materials for damage upon delivery

B. Storage and Protection:
1. Store materials indoors and protect from moisture

1.6 WARRANTY

A. Special Warranty:
1. Warrant the mezzanine materials to be free from manufacturing defects for a period of 25 years from date of Substantial Completion.
2. Warranty shall not cover damage caused by conditions beyond the control of the supplier or installer such as faulty construction of the building, ordinary wear and tear, fire, water or chemical action, separation of concrete slab or settling of walls.

PART 2 PRODUCTS

2.1 APPROVED MANUFACTURERS

A. Wildeck, Inc., 405 Commerce St., Waukesha, WI 53186

B. Cogan Wire and Metal Products Ltd., 2460 Des Enterprises, Terrebonne, Quebec J6X 4J8; Tel.: 800-567-2642; Fax: 800-633-3004

C. Or Approved Equal

2.2 MATERIALS (OR APPROVED EQUAL)

A. Framing:
   1. Bar joist framing shall be steel: chord size and depth as designed and manufactured to AlSC-SJI specifications.
   2. Wide flange beam framing shall be structural steel; depth, width, and thickness as meeting the requirements of ASTM A36 or A992/572 Grade 50.

B. Support columns shall be minimum 5″ x 5″ x 3/16″ (square wall) hollow structural sections (HSS) meeting the requirements of ASTM A500, Grade B, FY-46KSI.
   1. Column base plates shall be minimum 12″ x 12" x 3/4″ steel meeting the requirements of ASTM A36.
   2. Column base floor anchors shall be high tensile and shear strength steel, Society of Automotive Engineers (SAE) Grade 5 or better, zinc plated, meeting the requirements of ASTM A325 type 3-B bolts.

C. Bar joist to beam fasteners shall be 1/2" x 1-1/2" zinc plated steel bolts meeting the requirements for ASTM A325. Beam to column fasteners shall be 3/4″ x 2″ zinc plated bolts meeting the requirements of ASTM A325.

D. Bridging shall be 2″ x 2″ x 1/8″ angle, meeting the requirements of ASTM A36.

E. Decking (Roof Deck & Moisture Resistant Resin Board):
   1. Roof decking shall be 1-1/2" deep, 20 gauge steel, wide rib, meeting the requirements of ASTM A1008, Grade C, FY-33KSI and painted manufacturer's standard gray on top side with one (1) mil white paint on bottom side.
   2. Roof deck fasteners shall be steel screws, 12-24 x 1-1/4″, HWH T/5, plated.
   3. Moisture Resistant Resin Board shall be 3/4" thick, tongue and groove on two long sides.
   4. Plywood fasteners shall be steel screws 10-16 x 1-13/16″ T/3, zinc plated.
   5. Kick plates shall be 2-1/2″ X 6-1/2″ or 6-1/2″ x 6-1/2″, 14 gauge formed steel angle.

F. Guardrail shall be high strength low alloy steel (HSLA) tube, 1-1/2″ O.D., ADA compliant horizontal rails with 2-1/2″ x 2-1/2″ x 1/8″ HSS uprights. Guardrail shall be attached directly to framing using 1/2″ ASTM A325 bolts and externally attached so no usable square footage on mezzanine is lost. Guards, or handrails, shall be a minimum of 42″ from the finished floor surface. Three-rail guard designs limit the clear opening between rails to 10½″. All guard, or handrail, systems shall have a kick plate (toe-plate), fastened to the top flanges of the perimeter beams or channels.

G. Stairs:
   1. There shall be stair system(s) as indicated. The complete assembly shall include stairs, 42" wide; structural steel stringers meeting the requirements of ASTM A1011; (HSLA) 1-1/2″ O.D. railing and all associated hardware.
   2. Closed/Open stair system shall have 12 gauge diamond plate steel treads and open risers.
   3. Stair Platform(s) shall be 48″x 48″ and have 12 gauge diamond plate steel over 1-1/2″ deep, 20 gauge, wide rib, roof deck.

H. Stair and stair platform floor anchors shall be 3/8" x 3" high tensile and shear strength steel, SAE Grade 5 or better, zinc plated, meeting the requirements of ASTM A325 Type 3-B bolts.

I. Concrete for Footings (if required):
   a. Per approved Submittal.

2.3 FABRICATION

A. Fabrication of materials shall comply with dimensions, profiles, and gauges shown on the approved Shop Drawings and, if not shown, shall consist of the mezzanine manufacturer's standard products.

2.4 FINISHES

A. Shop Priming:
   1. Per manufacturers recommendation
B. Shop Finishing:
   1. Per manufacturers recommendation
   2. Mezzanine shall be gray.
   3. All structural beams, columns, landings, handrail and gates shall be painted or powder coated manufacturer’s standard colors. All handrails shall be painted safety yellow.

PART 3 EXECUTION

3.1 INSPECTION

A. Inspect working areas to be sure concrete slab is cleaned of all debris so installers shall have adequate access to work surface.

3.2 FIELD INSPECTION

A. Field Inspection:
   1. Inspect the Site prior to preparation of Shop Drawings to verify existing conditions.
   2. Any obstructions not indicated on the Drawings that may affect the design of the mezzanine shall be reported to Owner.

3.3 PREPARATION

A. Protection: Contractor shall be responsible for the protection of all existing building elements, walls, doors and finishes. Contractor shall be responsible to repair, at no additional cost to the Owner, any damage caused by delivery, erection and installation of the mezzanine system.
B. Surface Preparation:
   1. Contractor shall be responsible for all floor surface preparation required to install the mezzanine column base plate level, plumb, and in full contact with the existing floor surface.
C. Mezzanine installation layout shall be the sole responsibility of the Contractor.

3.4 INSTALLATION

A. Erection of the mezzanine and accessories shall be in accordance with the Shop Drawings, Specifications, and manufacturer’s instructions.
B. Erector shall clean up all unused materials and debris and remove same from the premises.

3.5 ERECTION

A. Contractor shall erect and install the mezzanine system in conformance with the manufacturer’s erection and installation instructions.

3.6 FIELD QUALITY CONTROL

A. Site Tests:
   1. PRMD special anchor bolt testing, if required

B. Inspection:
   1. Per PRMD Permit conditions

3.7 CLEANING

A. Contractor shall thoroughly clean all surfaces upon completing the erection and installation. Contractor shall be responsible for the disposal of all waste materials generated by the delivery (including all shipping packaging) and installation of the mezzanine system.

END OF SECTION

SECTION 13440

RECYCLED WATER SYSTEM - INSTRUMENTATION FOR PROCESS CONTROL: BASIC REQUIREMENTS

PART 1 GENERAL

1.1 SUMMARY

A. Related Sections:
   1. Section 16123 (600-Volt Power Conductors and Cables)

1.2 REFERENCES

A. ISA S5.1 Instrumentation Symbols and Identification.
B. ISA S5.3 Graphic Symbols for Distributed Control/Shared Display Instrumentation, Logic and Computer Systems.
C. IS S5.4 Standard Instrument Loop Diagrams.
D. ISA S20 Standard Specification Forms for Process Measurement and Control Instruments, Primary Elements and Control Valves.

1.3 DEFINITIONS

A. Calibrate: To standardize a device so that it provides a specified response to known inputs.

1.4 SYSTEM DESCRIPTION

A. Control System Requirements:
   1. The instrument and control system consists of all primary elements, transmitters, switches, controllers, computers, indicators, panels, signal converters, signal boosters, amplifiers, special power supplies, special or shielded cable, special grounding or isolation, auxiliaries, software, wiring, and other devices required to provide complete control Recycled Water System as specified in the Contract Documents.
B. Unless otherwise required for instrument compatibility, electric control signals shall be 4 to 20 mA, 24 V DC.
C. All signals shall be directly linearly proportional to measured variable unless specifically noted otherwise.
D. Single Instrumentation Subcontractor:
   1. Furnish, coordinate, and install instrumentation system through a single instrumentation Subcontractor. The instrumentation Subcontractor shall be responsible for functional operations of recycled water system, performance of control system engineering, supervision of installation, final connections, calibrations, preparation of drawings and Installation, Operation, and Maintenance Manuals, startup, training, demonstration, of Substantial Completion and all other aspects of the control system.
   2. Ensure coordination of instrumentation with other Work to ensure that necessary wiring, conduits, contacts, relays, converters, and incidentals are provided in order to transmit, receive, and control necessary signals to other control elements, to control panels, and to receiving stations.

1.5 SUBMITTALS

A. Product Data:
   1. Acknowledgement that products submitted meet requirements of standards referenced.
   2. Equipment catalog cut sheets.

3. Instrument data sheets:
   a. Separate data sheet for each instrument.
4. Materials of construction.
5. Minimum and maximum flow ranges.
6. Pressure loss curves.
7. Physical limits of components including temperature and pressure limits.
8. Size and weight.
9. Electrical power requirements and wiring diagrams.
10. NEMA rating of housings.
11. Submittals shall be marked with arrows to show exact features to be provided.

B. Shop Drawings:
1. Loop diagrams per ISA S5.4.
   a. Each loop diagram on a separate sheet.
   b. Each sheet shall contain the following minimum information.
      1) All loop devices clearly identified.
      2) Identification of the loop and each loop component, including connections to such things as recorders and computers.
      3) All interconnections with identifying numbers for:
         (a) Electrical cables.
         (b) Conductor pairs.
         (c) Pneumatic or hydraulic tubing.
      4) Identification of connections including:
         (a) Junction boxes.
         (b) Terminals.
         (c) Bulkheads.
         (d) Ports.
         (e) Computer input/output connections.
         (f) Grounding systems.
      5) Signal levels and ranges.
      6) Device location.
      7) Energy sources designating voltage, pressure, and other applicable requirements.
      8) Enough process lines and equipment to clearly show the process side of the loop and provide clarity of control action. This includes:
         (a) What is being measured.
         (b) What is being controlled.
         (c) Other information required to complete the process loop.
      9) Reference to supplementary records and drawings to show inter-relation to other control loops.
      10) Controller action.
      11) Control valve action upon electronic, hydraulic, or pneumatic failure.
2. Process connected instrument installation details containing the following minimum information:
   a. Bill of materials providing as a minimum the following information:
      1) Tube material and size.
      2) Connection size.
      3) Fitting size, material, and rating.
      4) Valve type and material.
      5) Instrument description.

6) Pipe stand size and material.
b. Tube slope requirements.
c. Required elevations and dimensions.

3. Comprehensive set of point-to-point wiring diagrams showing all interconnections between packaged systems or equipment control panels, motor control centers, instrumentation and all other electrical equipment as required to depict a complete and functional Recycled Water electrical control system. Instrumentation wiring already shown on loop diagrams need not be included on point-to-point wiring diagrams.
   a. Diagrams shall provide the following minimum information:
      1) Terminal block identification
      2) Wire size.
      3) Wire type.
      4) Wire color.
      5) Wire shielding and insulation type.
      6) Conductor quantities and associated conduit size.
      7) Ground points.
   b. Diagrams shall be provided on drawings of sufficient size so as to minimize the number of drawings.
      1) Drawing size 11 x 17 inches.
4. Electrical schematic control diagrams. Diagrams shall include:
   a. Terminal identification.
   b. Unique identification of all control devices and contacts.
      1) Utilize Owner's device identification numbers where applicable.
   c. Wire identification.
   d. Equipment identification.
   e. Indication of remote and local devices and wiring.
   f. Overcurrent protection indication.
   g. Voltage.
   h. All control logic.
5. Panel fabrication drawings.
6. PLC equipment drawing(s).
7. Graphic layouts.
8. Graphic component construction.
9. Nameplate layout drawings.
10. Drawings, systems, and other elements are represented schematically in accordance with ISA S5.1 and S5.3. The nomenclature, tag numbers, equipment numbers, panel numbers, and related series identification contained in the Contract Documents shall be employed exclusively throughout submittals.

C. Quality Assurance/Control Submittal:
   1. Certificates:
      a. Provide list of local factory authorized service agents.
      b. Documentation verifying that calibration equipment is certified with NIST traceability.
      c. Approvals from independent testing laboratories or approval agencies, such as UL, FM or CSA. Certification documentation is required for all equipment for which the specifications require independent agency approval.
   2. Test Reports:
      a. Source quality control reports.

1.6 QUALITY ASSURANCE

A. Miscellaneous:
   1. Comply with electrical classifications and NEMA enclosure types indicated.
   2. Instrument data sheets shall meet ISA S20 or Approved Equal.

1.7 DELIVERY, STORAGE, AND HANDLING

A. Do not remove shipping blocks, plugs, caps, and desiccant dryers installed to protect the instrumentation during shipment until the instruments are installed and permanent connections are made.

PART 2 PRODUCTS

2.1 PERFORMANCE AND DESIGN REQUIREMENTS

A. System Operating Criteria:
   1. Stability: After controls have taken corrective action, as result of a change in the controlled variable or a change in setpoint, oscillation of final control element shall not exceed two cycles per minute or a magnitude of movement of 0.5 percent full travel.
   2. Response: Any change in setpoint or change in controlled variable shall produce a corresponding corrective change in position of final control element and become stabilized within 30 seconds.
   3. Agreement: Setpoint indication of controlled variable and measured indication of controlled variable shall agree within 3 percent of full scale over a 6:1 operating range.
   4. Repeatability: For any repeated magnitude of control signal, from either an increasing or decreasing direction, the final control element shall take a repeated position within 0.5 percent of full travel regardless of force required to position final element.
   5. Sensitivity: Controls shall respond to setpoint deviations and measured variable deviations within 1.0 percent of full scale.
   6. Performance: All instruments and control devices shall perform in accordance with manufacturer's specifications.

2.2 ACCESSORIES

A. Provide instruments with manufacturer's identification nameplate showing:
   1. Manufacturer's model number.
   2. Manufacturer's serial number.
   3. Range.
      a. Utilize the same units of measurement as are utilized in the Contract Documents.
   4. Power supply requirement.

PART 3 EXECUTION

3.1 INSTALLATION

A. Install electrical components per Division 16.
B. Panel-Mounted Instruments:
   1. Mount and wire so removal or replacement may be accomplished without interruption of service to adjacent devices.
   2. Locate all devices mounted inside enclosures so terminals and adjustment devices are readily accessible without use of special tools and with terminal markings clearly visible.
C. See Section 16123 (600-Volt Power Conductors and Cables).

3.2 FIELD QUALITY CONTROL

A. Maintain accurate daily log of all startup activities, calibration functions, and final setpoint adjustments.
   1. Documentation requirements include the utilization of the following manufacturer's forms.
      a. Loop Checkout Sheet.
      b. Instrument Certification Sheet.
      c. Final Control Element Certification Sheet.

B. Instrumentation Calibration:
   1. Verify that all instruments and control devices are calibrated to provide the performance required by the Contract Documents.
   2. Calibrate all field-mounted instruments, other than local pressure gages, after the device is mounted in place to assure proper installed operation.
   3. Calibrate in accordance with the manufacturer's specifications.
   4. Bench calibrate pressure gages. Field mount gage within 1 Day of calibration.
   5. Check the calibration of each transmitter and gage across its specified range at 0, 25, 50, 75, and 100 percent. Check for both increasing and decreasing input signals to detect hysteresis.
   6. Replace any instrument which cannot be properly adjusted.
   7. Stroke control valves with clean dry air to verify control action, positioner settings, and solenoid functions.
   8. Mark range, date, setpoint and calibrator's initials on each instrument by means of blue or black ink on a waterproof tag affixed to the instrument.
   9. Calibration equipment shall be certified by an independent agency with traceability to NIST. Certification shall be up-to-date. Use of equipment with expired certifications shall not be permitted.
   10. Calibration equipment shall be at least three times more accurate as the device being calibrated.

C. Loop checkout requirements are as follows:
   1. Check control signal generation, transmission, reception and response for all control loops under simulated operating conditions by imposing a signal on the loop at the instrument connections. Use actual signals where available. Closely observe controllers, recorders, alarm and trip units, remote setpoints, ratio systems, and other control components. Make corrections as required. Following any corrections, retest the loop as before.
   2. Stroke all control valves, cylinders, drives and connecting linkages from the local control station.
   3. Check all interlocks to the maximum extent possible.
   4. In addition to any other as-recorded documents, record all setpoint and calibration changes on all affected Contract Documents and turn over to the Owner.

D. Provide verification of system assembly, power, ground, and I/O tests.

E. Verify existence and measure adequacy of all grounds required for instrumentation and controls.

END OF SECTION

SECTION 13441

RECYCLED WATER SYSTEM - CONTROL LOOP DESCRIPTIONS

PART 1 GENERAL

1.1 SUMMARY

A. Related Sections:
   1. Section 13440 (Recycled Water System - Instrumentation for Process Control: Basic Requirements)
   2. Section 13500 (Programmable Logic Controller [PLC] Control System)

1.2 SYSTEM DESCRIPTION

A. The control loop description provides the functional requirements of the control loop represented in the Contract Documents.
B. The control loop description is not intended to be an inclusive listing of all elements and appurtenances required to execute loop functions, but are rather intended to supplement and complement the drawings and other specification sections. The control loop descriptions shall not be considered equal to a bill of materials.
C. Provide instrumentation hardware and software as necessary to perform control functions specified herein and indicated.

1.3 SUBMITTALS

A. See Section 13440 (Instrumentation for Process Control: Basic Requirements).
B. Product Data:
   1. Include with submittals control loop description for each loop in system. Ensure that tag numbers cross reference with loop diagrams and tag numbers shown on instrument specification forms. Where tag numbers are not assigned, assign tag numbers. Describe each element and include appropriate tag number in parenthesis. When additional elements are necessary, use and assign tag number not in conflict with others and in accordance with ISA procedures.

PART 2 PRODUCTS - NOT USED

PART 3 EXECUTION

3.1 CONTROL LOOPS

A. General:
   1. Control and operator interaction shall be accomplished through the PLC.
   2. PID Loops: PID loops shall be based upon the control scheme described herein and as portrayed in the PID diagrams.
   3. Multiple Devices: If more than one device can be controlled by the PID loop, then provide one set of PID parameters (setpoints, indications, etc.) for each device.
   4. Group Control: If more than one device can be controlled as part of a group, then provide a group set of PID parameters. The control scheme shall automatically select the group parameters if more than one devices' HMI HOA is in Auto. Unless a

compound / cascade loop is specified, both devices shall be controlled by the same percent output signal.

B. Primary System and Subsystem (Ancillary Equipment) List
   1. Primary Recycled Water (RW) System Loop from Storage Tank to Buildings
      a. Variable Frequency Drives (VFDs) shall control Primary RW Loop Hydronic Pumps (RW-1 and RW-2) flow rate to heat pumps and plumbing fixtures. Flow shall sustain an operator adjustable pressure set point in the Primary RW Loop.
         1) Initial pressure set point shall be 30 psi.
         2) Pressurize expansion tank to 35 psi (or per manufacturer recommendation).
      2. High pressure alarm shall be set at 40 psi.
      2. Low pressure alarm shall be set at 10 psi.
      3. Pump discharge pressure shall be indicated by Pressure Indicating Transmitter (PIT)
      4. RW and RW Return (RWR) flow rate shall be indicated by the flow indicating transmitters (FIT)
      5. RW and RWR temperature shall be indicated by the temperature indicating transmitters (TIT)
      6. RWR shall feed to the 12 inch Tertiary Filter Effluent Overflow (TFE OF) line

C. Storage Tank
      a. New 5,000 gallon Storage Tank shall be fed from the Microfiltration Tertiary Filter Effluent (TFE) line prior to Chlorine Contact Tank
      b. Storage Tank shall supply RW to:
         1) TFE Overflow to existing Chlorine Contact line
         2) Microfiltration Reverse Filtration (RF) Pumps
         3) Primary Loop Recycled Water (RW) to:
            (a) Heat pumps in new and existing buildings
            (b) Toilets, urinals, wash rack at new and existing buildings
      c. Storage tank shall have a programmable integral ultrasonic water level indicating transmitter (LIT), sightglass and separate level sensor- low.
      d. Overflow from the tank shall go to the chlorine contact chamber

D. Recycled Water (RW) Pumps Control
   1. The RW Pump starter shall reside in existing VFD control enclosure.
   2. The RW Pump starter shall have the operators and statuses described in contract documents
   3. From the starter, the Operator shall be able to turn the RW pump On or Off using the local HOA switch.
   4. From the starter, the Operator shall be able to select Auto from the HOA switch, enabling local manual control via the PLC for the Storage Tank Control Panel.
      a. From the starter Control Panel, the Operator shall be able to manually operate the speed of the RW pumps until design criteria is met.
   5. When operating, the RW pump shall operate continuously to maintain setpoint pressures.
   6. If the pump motor fails to start when called or fails in operation while called, an alarm shall be generated on the Storage Tank Control Panel.
   7. Auxiliary contact in field safety switch to disable starter as shown in diagram.
   8. Alarms shall be generated on low storage tank level
   9. Pumps shall shut down on low storage tank level
   10. Automatic Control
      a. The speed of the RW pumps shall be controlled by the main discharge line pressure.

b. The pressure shall be displayed in the Storage Tank Control Panel.
c. Pumps shall operate as user selected duty/standby.
d. When the system is online, a pump shall operate continuously at variable speed. A control band with setpoint at the high point (maximum pressure) of the band shall be configurable by the user. The variable speed pumps shall operate at zero speed at the low point of the band, full speed at the high end and at a proportional speed in between. Only one VFD shall operate at one time.
e. If a VFD reaches a preset minimum speed (about zero flow) a pump shall be taken off line after a preset user adjustable time delay (0-5 minutes).
f. If a pump fails to start when called or fails in operation while called, the next pump shall be placed online after a preset user adjustable time delay and an alarm generated.

11. The user shall be able to preset the following parameters on the HMI:
    a. Duty or standby.
    b. Auto-manual software switch.
    c. Control band high and low speed rates.
    d. Control band high and low pressure rates
    e. Start pump speed rate.
    f. Start pump pressure rate.
    g. Fixed speed pump on-off points.
    h. VFD minimum speed (zero Q speed).
    i. Time delay for pump start (0-5 minutes).
    j. Time delay for pump stop (0-5 minutes).
12. When operated in Manual Mode, the XR Pump speed will be set by the Operator to maintain a constant pressure rate to the buildings.
    a. The XR Pump shall shutdown automatically if the Storage tank level reaches 1 foot above the top of the 12 inch pump suction connection point.

E. Tertiary Filter Effluent (TFE) Line Valve Control Loops
    a. Normal Flow Through Operation:
        1) Valve V1 shall be normally closed to allow flow to be directed into the storage tank
        2) Valves V2, and V11 shall be normally open
        3) Valves V4 through V10 shall remain open
    b. Filter Maintenance Closed Loop Operation:
        1) Valve V1 shall remain normally closed
        2) Valve V11 shall automatically close to allow flow to be directed through the storage tank after a preset time delay (0-5 minutes).
        3) Valves V2 through V11 shall remain normally open
    c. Valves V11 shall be remotely controlled through the HMI
    d. All valve statuses shall be displayed on the HMI
2. Valve V11 shall fail open
    a. All valves shall be displayed on the HMI
3. Valve V2 shall fail open
4. Valve V12 shall fail close.

F. See PLC I/O list in Section 13500 (Programmable Logic Controller [PLC] Control System) for input/output.
1. Each analog input shall have adjustable high and low alarm points.
2. Add any other I/O specifically required for recycled water system supplied.

G. Hand – Off – Auto Modes – Each piece of equipment's local HOA switch shall set the mode of operation as follows:
   1. Hand – Equipment is run manually via local equipment controller
   2. Off – Equipment cannot be run manually or automatically.
   3. Auto – Equipment shall be controlled via the equipment's corresponding HOA as follows:
      a. Hand – Equipment is run manually from VFD.
      b. Off – Equipment cannot be run manually or automatically from HMI.
      c. Auto – Equipment is controlled by HMI settings.

H. Power Restoration. After restoration of utility power, the PLC shall restart, but not enable any equipment until the power is known to be acceptable (i.e. has been restored for two minutes continuously). Once the power is known to be acceptable, the PLC shall enable equipment to resume operation.

I. Cold restart. If a piece of equipment's local HOA switch is in Auto, then the PLC shall automatically set HOA to Auto; otherwise it shall be set to Off.

J. Default Setpoints. A single system password protected pushbutton shall enable an operator to reset all setpoints to a default value. Default values shall be established and tested before project completion.

END OF DOCUMENT

SECTION 13442

RECYCLED WATER SYSTEM - PRIMARY ELEMENTS AND TRANSMITTERS

PART 1 GENERAL

1.1 SUMMARY

A. Section Includes:
1. Flow components
2. Pressure components
3. Level components
4. Temperature components
5. Analytical components
6. Instrument valves
7. Pipe, tubing and fittings

1.2 REFERENCES

A.	ANSI B16.5	Pipe Flanges and Flanged Fittings
B.	ASTM A106	Standard Specification for Seamless Carbon Steel Pipe for High-Temperature Service
C.	NEMA ICS 6	Enclosures for Industrial Controls and Systems

1.3 SYSTEM DESCRIPTION

A. The instruments specified in this Section are the primary element components for the control loop shown on the "ME" series Drawings and specified in Section 13441 (Control Loop Descriptions).

1.4 SUBMITTALS

A. See Section 13440 (Recycled Water System - Instrumentation for Process Control: Basic Requirements).
B. Quality Assurance/Control Submittals:
1. Certificates:
   a. Certified calibration sheets from the factory
2. Manufacturer's Instructions:
   a. Pressure gages: pressure and temperature calibration
C. Installation, Operation and Maintenance Manuals:
1. Magnetic Flow Meters
2. Pressure Transmitter
3. Level Transmitter
4. Float
5. Pressure Gages
6. Temperature Transmitter
7. Annular Seal

PART 2 PRODUCTS

2.1 MANUFACTURERS

A. Subject to compliance with the Contract Documents, the manufacturers listed in the articles describing the elements are acceptable.

2.2 FLOW COMPONENTS

A. Magnetic Flow Meter:
1. Acceptable Manufacturer:
   a. Rosemount 8732E with 8707 sensor.
   b. No substitutions.
2. Materials:
   a. Meter lining: Polyurethane, Teflon, ceramic, or hard rubber
   b. Meter body: Heat fused powder coating or similar corrosion resistance for wet environment.
   c. Grounding rings: Stainless steel with tabs extending outside flange.
   d. Provide adequate cable to connect meter body to remotely mounted electronics.
3. Design and fabrication:
   a. Utilize characterized field principle of electromagnetic induction to produce signal directly proportional to flow rate.
   b. High input impedance pre-amplifiers.
      1) Minimum impedance: 10^{10} ohms.
   c. Provide 150 pounds flanged end connections per ANSI B16.5.
   d. Operating pressure: 30 psi.
   e. Operating temperature: 90 Degree F.
   f. Grounding requirements: Provide grounding rings.
   g. Pulsed DC magnetic field excitation.
   h. Integral mount transmitter
   i. Automatic zero.
   j. Adjustable low flow cutoff.
   k. Minimum signal lock (empty tube zero) to prevent false measurement when tube is empty.
   l. Accuracy to be $\pm$ 0.25 percent of rate for flow.
   m. 4-20 mA DC isolated output into maximum 650 ohms.
   n. Power supply: 12 to 42V DC.
   o. Meter body to be rated NEMA 6 for mounting in wet location.
   p. Advanced diagnostic
   q. HART/Analog
4. Schedule:

TAG NUMBER	SERVICE	FLOW RANGE	METER SIZE (INCHES)	TRANSMITTER MOUNTING
F1	RW	0 150 gpm	3	Flange
F2	RWR	0 150 gpm	3	Flange

2.3 LEVEL COMPONENTS

A. Level Sensor and Transmitter:
1. Acceptable manufacturers:
   a. Rosemount 2051L Level transmitter
   b. No substitutions.
2. Materials:
   a. Sensor wetted parts: CPVC housing with CPVC facing.
3. Design and fabrication:
   a. Sensor:

1) Media: tertiary water
2) Measurement Type: Differential level.
3) Product Configuration: flush and extened diaphragm seals
4) Output: 4-20 mA with digital signal based on Hart Protocol
5) Reference Accuracy: 0.075% span
6) Local Zero and Span
7) Sensor module:
   (a) Diaphragm material: 316L SST
   (b) Sensor fill fluid: Silicone
8) Provide adequate cable with sensor to reach unspliced to transmitter.
9) Provide process connections: 316 SST
10) Continuous level measurement

b. Temperature compensated.
c. Process temperature limit: -49 to 401 degrees F.
d. Humidity: 100% percent relative humidity.
e. Range: -250 TO 250 in H2O
f. Housing: SST
g. Terminal blocks: Transient Protection Terminal Block
h. Pressure Testing: Hydrostatic testing with certificate
i. Calibration Certificate
j. Product Certification:
   1) Intrinsically safe
   2) NSF Drinking Water Approval
k. Transmitter:
   1) Capable of producing output signal proportional to level of 4-20 mA.
   2) Communication: HART
   3) Power supply: External power supply. 10.5 to 55Vdc with no load.
   4) Accuracy: 0.15% of full range.
   5) Resolution: 0.1 percent of span.
   6) Repeatability: ±0.2 inch.
   7) Damping: 0.4 seconds
   8) Display: four-digit LED or LCD scalable to engineering units with selectable decimal point.
   9) Temperature Limits with LCD display: -40 to 175 degrees F.
   10) Humidity: 90 percent noncondensing.
   11) Local Zero and Span
   12) Alarm Option: Low
   13) Optimized seal system construction for reliability
   14) Sensor fill fluid: Silicone 200
   15) Flange Rating: ANSI Class 3000
l. Schedule:

TAG NUMBER	SERVICE	DEPTH TO MAXIMUM LIQUID SURFACE, FEET	RANGE	MOUNT
LIT1	Recycled Water Storage tank	9	1-9	Flange

B. Float-Tilt Type Level Switches:
1. Acceptable manufacturers:
   a. Anchor Scientific Inc.

b. Consolidated Electric.
c. Or Approved Equal.

2. Materials:
   a. Float material: Polypropylene or Teflon coated type 316 stainless steel.
   b. Cable jacket: PVC, neoprene or equal.
   c. Cable clamp: Polypropylene or 316 stainless steel.
3. Design and fabrication:
   a. Sealed switch in float.
   b. Provide switch complete with flexible electrical cables.
   c. SPDT contact rated at 4.5 A at 120 VAC.
   d. Direct acting float switch:
      1) Switch actuated on rising level.
      2) Switch deactuates when liquid falls 1 IN below actuation level.
   e. Terminate cables in junction box.
   f. Process temperature: 100 DegF.
   g. Install float per Drawing details.
   h. Mount on top of tank.
   i. Weight kit.
4. Schedule:

TAG NUMBER	MOUNTING	NOTES
LSL	NPT	

2.4 PRESSURE COMPONENTS

A. Pressure Sensor and Transmitter:
   1. Acceptable manufacturers:
      a. Rosemount 2051T In Line Pressure transmitter
      b. No substitutions.
   2. Materials:
      a. Sensor wetted parts: 316 SST.
   3. Design and fabrication:
      a. Sensor:
         1) Media: tertiary water
         2) Measurement Type: gage pressure.
         3) Product Configuration: flush and extended diaphragm seals
         4) Sensor fill fluid: Silicone
         5) Long Term Stability: 0.1% of URL for two years
         6) Output: 4-20 mA Hart
         7) Ranges: 0.2 to 10,000 psi
         8) Provide adequate cable with sensor to reach unspliced to transmitter.
         9) Provide connections
      b. Temperature compensated.
      c. Process temperature limit: -40 to 250 degrees F.
      d. Humidity: 100 percent relative humidity.
      e. Fully assembled and leak tested for out-of-the box installation
      f. Housing: SST
      g. Terminal blocks: Transient Protection Terminal Block
      h. Pressure Testing: Hydrostatic testing with certificate

i. Calibration Certificate
j. Product Certification:
   1) Intrinsically safe
   2) NSF Drinking Water Approval
k. Transmitter:
   1) Capable of producing output signal proportional to level of 4-20 mA.
   2) Communication: HART
   3) Power supply: External power supply. 10.5 to 55Vdc with no load.
   4) Accuracy: 0.065% of full range.
   5) Resolution: 0.1 percent of span.
   6) Damping: 0.4 seconds
   7) Display: four-digit LED or LCD scalable to engineering units with selectable decimal point.
   8) Temperature Limits with LCD display: -40 to 175 degrees F.
l. Local Zero and Span
m. Schedule:

TAG NUMBER	SERVICE	RANGE, PSI	MOUNT
P1	Discharge line pressure	0 – 50	Flange

B. Pressure Gage:
1. Acceptable manufacturers:
   a. Ashcroft.
   b. Ametek.
   c. Or Approved Equal.
2. Materials:
   a. Bourdon tube, socket, connecting tube: 316 stainless steel.
   b. Case: Phenolic.
   c. Diaphragm seal housing: 316 stainless steel.
   d. Pressure snubber:
      1) Filter disc: 316 stainless steel.
      2) Housing: Brass.
3. Accessories:
   a. Provide valve at point of connection to equipment and at panel if panel mounted.
   b. Utilize pressure snubbers with porous metal discs to provide pulsation dampening on gage applications as shown on schedule.
   c. Provide 1/2-inch stainless steel antisiphon pigtail inlet connection for hot water and steam applications.
4. Design and fabrication:
   a. All components suitable for service at:
      1) 250 degrees F.
      2) The maximum process temperature to which the gage is to be exposed.
   b. Provide viewer protection from element rupture.
   c. Calibrate gages at Site for pressure and temperature in accordance with manufacturer's instructions.
   d. Unless otherwise required by codes, provide stem mounted or flush mounted, as required, with dial diameter as follows:

PIPE SIZE	DIAL SIZE	GAGE CONNECTION
1-1/2 inch or less	2-1/2	1/4 inch

	inches	
Larger than 1-1/2 inch	4-1/2 inches	1/2 inch

e. Equip with white faces, black numerals and black pointers.
f. Gage tapping position to be clear of equipment functions and movements, and protected from maintenance and operation of equipment. Gage to be readable from an accessible standing position.
g. Gage accuracy: 1 percent of full range.
h. Select gage range so that:
   1) The normal operating value is in the middle third of the dial.
   2) Maximum operating pressure does not exceed 75 percent of the full scale range.

2.5 TEMPERATURE COMPONENTS

A. Temperature Sensor and Transmitter:
   1. Acceptable manufacturers:
      a. Rosemount 3144P
      b. Or Approved equal
   2. Materials:
      a. Sensor wetted parts: 316 SST.
   3. Design and fabrication:
      a. Sensor:
         1) Media: tertiary water
         2) Measurement Type: gage temperature.
         3) Long Term Stability: RTDs 0.25% of reading or 0.25 degrees C, whichever is greater for five years
         4) Output: 4-20 mA Hart
         5) Ranges: 0 to 100 degrees F
         6) Provide adequate cable with sensor to reach unspliced to transmitter.
         7) Provide connections
      b. Humidity: 0-99% relative humidity
      c. Fully assembled and leak tested for out-of-the box installation
      d. Housing: SST
      e. Calibration Certificate
      f. Product Certification:
         1) Intrinsically safe
         2) Explosion-proof
      g. Transmitter:
         1) Capable of producing output signal proportional to level of 4-20 mA.
         2) Communication: HART
         3) Power supply: External power supply. 12 to 42.4Vdc with no load.
         4) Accuracy: 0.02% of span.
         5) Power Supply Effect: Less than .0005% percent of span per volt.
         6) Damping: 0 seconds
         7) Display: five-digit LED or LCD scalable to engineering units with selectable decimal point.
         8) Temperature Limits with LCD display: -40 to 185 degrees F.

2.6 ACCESSORIES

A. Furnish all mounting brackets, hardware and appurtenances required for mounting primary elements and transmitters.
   1. Materials, unless otherwise specified, shall be as follows:
      a. Bolts, nuts, washers, expansion anchors: 316 stainless steel.
      b. Mounting brackets, plates and angles:
         1) Standard: 316 stainless steel.
      c. Instrument pipe stands, wall, pipe flange or floor mounting as required:
         1) Standard: Hot-dip galvanized 2 inch schedule 40, ASTM A106, Grade B carbon steel.
         2) Outdoors: 316 stainless steel.
B. Cable lengths between sensors and transmitters shall be continuous (without splices) and as required to accommodate locations as indicated.
C. Process connection shall be provided

PART 3 EXECUTION

3.1 INSTALLATION

A. Install products in accordance with manufacturer's instructions.
B. Install instrument mounting pipe stands level and plumb.
C. Instrument Valves:
   1. Orient stems for proper operation.
   2. Install arrays orderly and neat in appearance with true horizontal and vertical lines.
   3. Provide a minimum of 2 inches clearance between valve handle turning radii where there are multiple valve handles appearing in a straight line.
   4. Valves shall have bonnets and any soft seals removed during welding or soldering into the line. When cool, reassemble the valves.
   5. Support each valve individually. The tubing system does not qualify as support for the valve.
D. Locate instrument piping and tubing so as to be free of vibration and interference with other piping, conduit, or equipment.
E. Keep foreign matter out of the system.
F. Remove all oil on piping and tubing with solvent before piping and tubing installation.
G. Plug all open ends and connections to keep out contaminants.
H. Tubing Installation:
   1. General:
      a. Install such that tube shows no sign of crumpling, bends of too short a radius, or flattening, etc.
      b. Make tube runs straight and parallel or perpendicular to the floor, equipment and piping runs.
      c. For liquid and steam applications, slope continuously from the process to the instrument with a minimum slope of 0.50 inch per foot.
      d. For gas and air applications, slope continuously from the instrument to the process with a minimum slope of 0.50 inch per foot.
      e. If the sensing line cannot be continuously sloped, install high point vents and low point drains.
      f. Keep instrument tubing clean during all phases of work.
      g. Blow out with clean, dry, oil-free air immediately before final assembly.

h. Cut by sawing only and debur.

2. Bending:
   a. Make each bend with tube bender of the correct size for the tube.
   b. Make all bends smooth and continuous.
   c. Rebending is not permitted.
   d. Make bends true to angle and radius.
   e. Maintain a true circular cross section of tubing without buckling or undue stretch of tube wall.
   f. Allowable tolerance for flattening out of tubing bends: Maximum of 8 percent of the OD for stainless steel tubing.
   g. Minimum bending radius for stainless steel tubing:

TUBE OD, INCHES	MINIMUM BENDING RADIUS, INCHES
1/4	9/16
3/8	15/16
1/2	1-1/2

   h. Minimum bending radius for type L, hard (drawn) copper.

TUBE OD INCHES	MINIMUM BENDING RADIUS, INCHES
3/8	1-3/4
1/2	2-1/2

3. Tubing support:
   a. Intermittently support by clamping to support angle.
   b. Install supports to be self-draining, supported by hangers, or cantilevered from walls or structural beams.
   c. Support at 5 feet-0 inches maximum spans for horizontal or vertical runs.
   d. Locate angle, channel and tray installation to protect tubing from spills and mechanical damage.
   e. Locate support members to clear all piping, conduit, equipment, hatchways, monorails, and personnel access ways and allow access for equipment operation and maintenance.
   f. Permanently attach supports to building steel or other permanent structural members.
4. Routing and orientation:
   a. Route to maintain a minimum headroom clearance of 8 feet.
   b. Locate and orient valves and specialties so that they are accessible for operation and maintenance from the operating floor. Do not route through or over equipment removal areas, below monorails or cranes nor above or below hatches.
5. Expansion and vibration provisions:
   a. Provide horizontal expansion loops at the process connections.
   b. Route tubing parallel to relative motion through sleeved supports that allow linear tube movement.

I. Threaded Connection Seals:
   1. Use Tite-Seal or Approved Equal.
   2. Use of lead base pipe dope or Teflon tape is not acceptable.
   3. Do not apply seal to tubing threads of compression fittings.

J. Instrument Mounting:
   1. Mount all instruments where they will be accessible from fixed ladders, platforms, or grade.
   2. Mount all local indicating instruments with face forward toward the normal operating area, within reading distance, and in the line of sight.
   3. Mount instruments level, plumb, and support rigidly.
   4. Mount to provide:
      a. Protection from heat, shock, and vibrations.
      b. Accessibility for maintenance.
      c. Freedom from interference with piping, conduit and equipment.

3.2 TRAINING

A. Provide on-Site training for these products by qualified service and training personnel of the control integrator or equipment supplier. Provide minimum training as follows:
   1. Level and pressure elements/transmitters: 2 hours.

END OF SECTION

SECTION 13448

RECYCLED WATER SYSTEM - CONTROL PANELS AND ENCLOSURES

PART 1 GENERAL

1.1 SUMMARY

A. Related Sections:
   1. Section 13500 (PLC Control System)
   2. Section 16075 (Identification for Electrical Systems)

1.2 REFERENCES

A. NEMA ICS 4 Terminal Blocks for Industrial Use
B. NEMA ICS 6 Enclosures for Industrial Controls and Systems
C. NEMA 250 Enclosures for Electrical Equipment (1000 V Maximum).
D. UL 508 Industrial Control Equipment
E. ANSI 81 Surge Withstand Test Procedure

1.3 DEFINITIONS

A. Foreign voltages: Voltages present in circuit even when the panel main power is disconnected.

1.4 SUBMITTALS

A. See Section 13440 (Instrumentation for Process Control: Basic Requirements).
B. Product Data:
   1. Statement of panel wiring methods including wire type, insulation colors, insulation rating, wire sized, wire routing, and wire labeling strategy to be implemented during panel fabrication.
   2. Letter documenting UL 508 capabilities.
   3. Scaled panel face and subpanel face instrument and nameplate layout drawings.
   4. Panel and subpanel materials of construction.
   5. Panel and subpanel dimensions and weights.
   6. Panel access openings.
   7. Conduit and wiring access locations.
   8. Internal wiring and terminal block drawings.
   9. Internal component layout to scale.
   10. Nameplate text.
   11. Total electrical load of panels and enclosures.
C. Installation, Operation and Maintenance Manuals:
   1. Control panel and all control devices in panel.
D. Closeout Submittals:
   1. Update the control panel Shop Drawings.

1.5 QUALITY ASSURANCE

A. Obtain approved control panel layouts prior to installation of conduit feeds.
B. Provide panel with the required NEMA rating per NEMA 250 to meet classifications indicated or specified.
C. Approved supplier of Industrial Control Equipment under provisions of UL 508. Entire assembly shall be affixed with a UL 508 label "Listed Enclosed Industrial Control Panel"

prior to shipment to the Site. Any control panel which arrives to the Site without an UL 508 label shall be rejected and sent back to the panel shop.

1.6 MAINTENANCE

A. Extra Materials:
   1. Replacement Bulbs / LEDs. Provide five or a minimum of 25 percent, whichever is greater, for replacement indicating light bulbs for each type of indicator.
   2. Lens. If equipment is furnished with lens for the illuminated indicators, provide one spare lens for every type used.
   3. Fuses. Provide five or a minimum of 25 percent, whichever is greater, for replacement indicating light bulbs for each type of indicator.
B. Paint Touch-Up Kit: Provide for field repair of coating damaged during shipment and installation.

1.7 DELIVERY, STORAGE, AND HANDLING

A. Packing and Shipping:
   1. Include control panel Shop Drawings with control panel when shipped to the Site.

PART 2 PRODUCTS

2.1 ACCEPTABLE MANUFACTURERS

A. Subject to compliance with the Contract Documents, the following manufacturers are acceptable:
   1. Enclosures:
      a. Hoffman Engineering Co.
      b. Circle AW.
      c. Or Approved Equal.

2.2 MATERIALS

A. Front Panel, Subpanel or Front Door: Steel or stainless steel as required.
B. Frame and Bottom Angles: Steel or stainless steel as required.
C. Top, Sides, Back, Sides, and Back Door: Steel or stainless steel as required.
D. Hinges: Stainless steel.
E. Nameplates: Phenolic.

2.3 ACCESSORIES

A. Panel Nameplates and Identification:
   1. See Section 16075 (Identification for Electrical Systems).

2.4 FABRICATION

A. General:
   1. Fabricate panels with instrument arrangements as indicated.
   2. Prime control panels with rust inhibitive shop applied primer and paint with two coats of ANSI 61 gray.
   3. Finish interior of panel with epoxy glass white.
   4. Provide control panel which meets the following requirements:
      a. Enclosure sheet metal thickness per UL 508, subpart 7.3.
      b. Bonding for continuity of grounding per UL 508, subpart 7.6.
      c. Enclosure openings per UL 508, subparts 7.8 through 7.11.

d. Observation windows, if utilized, per UL 508, subpart 7.12.
e. Constructed in accordance with NEMA type per UL 508, subpart 7.15.
f. Corrosion protected per UL 508, subpart 8.
g. Tapped holes for conduit in a cast metal enclosure per UL 508, subpart 27.3
h. Knockouts in sheet-metal enclosure per UL 508, subpart 27.4

5. Provide cautionary markings, if required, in accordance with UL 508, subpart 59.
   a. Locate cautionary markings per UL 508, subparts 59.1, 59.3.
   b. Prefix the cautionary marking with the word "CAUTION" or "WARNING" utilizing letters sized per UL 508, subpart 59.2.
   c. If more than one disconnect switch is required to disconnect all power within a panel or enclosure, provide a cautionary marking with the word "CAUTION" and the following or equivalent, "Risk of Electric Shock-More than one disconnect switch required to de-energize the equipment before servicing."
      1) Locate the cautionary marking on the outside of the equipment or on a stationary fixed, nonremovable part inside the equipment where easily and clearly seen.

B. Wall Mounted Panels:
1. Seams continuously welded and ground smooth.
2. Rolled lip around all sides of enclosure door opening.
3. Gasketed dust tight.
4. Three-point latching mechanism operated by oil tight key-locking handle.
5. Key doors alike.
6. Continuous heavy gauge hinge pin on doors.
   a. Hinges rated for 1.5 times door plus instrument weight.
7. After cutouts have been made, finish opening edges to smooth and true surface condition.
8. Front full opening door.
9. Brackets for wall mounting.

C. Panel Front Construction:
1. Welded construction.
2. Edges turned and ground smooth to touch and visual appearance.
3. At joints where panel face meets side walls, provide dustproof sponge rubber gasket entire height and face.
4. Use full length piano hinges rated for 1.5 times door weight for panel access door.
5. Equip doors with locking devices and handle and three point catches.
6. Finish all instrument cutouts smooth and true.

D. Panel Wiring and Piping:
1. See Section 13500 (Programmable Logic Controller (PLC) Control System) for PLC/field terminal wiring. Wire all PLC I/O points to terminal blocks, including all spare points.
2. Factory wire panels to identified terminal blocks equipped with screw type lugs.
3. Install all wiring without splicing in factory in plastic wire duct:
   a. Do not exceed manufacturer's recommended fill limits.
   b. Ducts shall have removable covers.
4. Splicing and tapping of wires allowed only at terminal blocks.
5. No more than two wires may be terminated on the interior side of any one field terminal block.
6. Wire bending space shall be in accordance with Tables 307B, C in NEMA ICS 6. Wire bunches to doors shall be secured at each end so that bending or twisting will be around longitudinal axis of wire. Protect bend area with sleeve.

7. Keep AC power lines separate from low-level DC lines, I/O power supply cables, and all I/O rack interconnect cables. Separate by at least 6 IN, except at unavoidable crossover points and at device terminations.
8. Arrange circuits on terminal blocks plus any spare conductors on adjacent terminals.
9. Provide necessary power supplies for control equipment.
10. Equip each panel with a main thermal magnetic circuit breaker. Limit load to maximum of 80 percent of circuit breaker rating.
11. Provide all necessary stabilizing voltage transformers, balancing potentiometers and rectifiers as necessary for specific instrument requirements.
12. Assure each panel mounted device is bonded or otherwise grounded to panel or panel grounding system by means of locknuts or pressure mounting methods.
    a. Equip panel with grounding terminals.
    b. All sub-panels and hinged doors shall be bonded to ground.
13. Arrange wiring with sufficient clearance for all leads. Arrange wire neatly, cut to proper length, and remove surplus wire.
14. Wiring to subpanels or rotary switches shall be individually bundled and installed with a "flexible loop" of sufficient length to permit the component to be removed from panel for maintenance without disconnecting wiring.
15. AC and DC circuit conductors shall be type MTW stranded copper suitable for operation at 600 V as specified in the NEC. Conductor size shall be as required for load and 16 AWG minimum.
16. Analog signal cables shall be of 600 V, stranded copper, twisted-shielded pairs of 18 AWG minimum. Ground analog cable drain conductors on grounded terminal blocks at one end of the cable only.
17. Use only high precision 250 ohm resistors with 0.25 percent accuracy to convert 4-20 mA analog signals to 1-5 V DC analog signals. Resistor leads shall be landed under terminal clamp by itself and not with any other wires.
18. Analog Signal Transmission
    19. Instruments
        a. Self-powered
            1) Analog signals with the power source emanating from field instruments shall be transmitted from field instrument to control panel using 4-20mA signal.
        b. Loop-powered (powered by control panel)
            1) Analog signals with the power source emanating from a control panel shall be manipulated by field instrument and transmitted to control panel using 4-20mA signal.
    20. Conduits and Wireways (Between Control Panels & Equipment)
        a. Analog Signals transmitted via conduits and wireways for the purpose of interconnecting field instruments, control panels, indicators, and control equipment shall be transmitted using 4-20mA signals.
    21. Control Panel Interior
        1. Analog signals transmitted to control panels (Inputs) shall be converted from 4-20mA signals by 250 ohm 1% precision resistor mounted on interior side of control panel terminal blocks, and shall be conveyed within an individual control panel using 1-5VDC.
        2. Analog signals transmitted from control panels (Outputs) shall be 4-20mA within the control panel.
    a. Controlled Equipment

1) Analog signals controlling equipment (VFDs, modulating valves, etc.) shall not be converted and shall remain 4-20mA signal inside the controlled equipment enclosure.

22. Loop isolators shall be used where analog signals are transmitted between control enclosures.
23. Identify all wires with plastic sleeve type (heat-shrinkable) wire markers at each end. Markers shall:
    a. Identify circuit numbers.
    b. Identify function and polarity.
24. Provide at least 6 IN of separation between all circuits and intrinsically safe devices and wires.
25. Termination requirements:
    a. Terminal block markings, mechanical characteristics and electrical characteristics shall be in accordance with NEMA ICS 4.
    b. Terminals shall facilitate wire sizes as follows:
        1) 120 V AC applications: Wire size 12 AWG and smaller.
        2) Other: Wire size 14 AWG and smaller.
    c. Provide terminal blocks with continuous marking strip.
    d. Tag each I/O terminal to indicate tag number of the connected device.
    e. Provide terminals for individual termination of each signal shield.
    f. Provide 20 percent excess terminals for future expansion.
    g. Use terminal blocks with bladed switch where control voltages enter or leave the control panel. Bladed terminal block body to be orange where foreign voltages connect to the panel.
    h. Use fused terminal blocks where the control circuit is energizing a solenoid valve or where providing DC power to loop-powered transmitter. Blown fuse indicators to be utilized on all fused terminal blocks.
    i. Use ¼″ x 1 – ¼″ fuses for 120VAC circuits, and 5-20mm fuses for 24VDC circuits.
    j. Install DIN rail along entire terminal strip area to facilitate future expansion.
    k. Utilize busses for DC and AC control voltages within panel. Include space for expansion.
    l. Provide marked field terminal strip for all PLC I/O connections.
26. Wire lugs to be full ring type and shall be used where connection points are not suitable for direct wire connection.

E. Panel Lighting and Power:
1. Receptacles:
    a. Panels less than 4 FT long:
        1) One electrical GFCI outlet.
        2) One incandescent light fixture with switch(es) and separate circuit breakers.
    b. Panels or panel faces greater than 4 FT long:
        1) One electrical GFCI outlet per 6 FT of length.
        2) Continuous fluorescent lighting strip with switches and separate circuit breakers.

F. Environmental Controls:
1. Furnish circulation fans near hot spots where required to prevent temperature from exceeding instrument rating.
    a. Circulation fans shall utilize coil windings which resist the absorption of moisture via impregnating, dipping in, or brushing with varnish, or by other acceptable means.

1) Film coated coil wires need not have additional treatment to resist moisture absorption.
b. Circulation fans shall incorporate locked rotor protection per UL 508, subpart 26.
2. Over-temperature switches shall be utilized to provide special cooling if required to maintain operating temperatures within the manufacturer's specified range.
3. Enclosure lighting shall illuminate by door switch when door is opened.
4. Air conditioning applications shall include means of preventing moisture condensation.
5. For panels or control cabinets located outside, or in area classification requiring a NEMA 4 or 4X rating:
a. Install thermostatically controlled condensation protection heaters in enclosures housing electronic equipment.
6. Each control panel and control station shall be furnished with industrial corrosion inhibitors.
a. The inhibitor contains a chemical that vaporizes and condenses on all surfaces in the enclosure.
b. The amount of inhibitor shall be according to manufacturer recommendation for the size of the enclosure.
c. Inhibitor shall be installed prior to shipment to the Site.

G. Transitent Noise Protection:
1. Each control panel with PLC components shall be furnished with power protection in the form of a surge suppressor followed by an isolation transformer.
2. The control components within the control panel shall be powered from the protected power. The convenience receptacles, lighting, and cooling power need not be from the protected power.

H. Uninterruptible Power Supply
1. Furnish 1500VA for PLC as specified under Section 13500 (PLC Control System).

PART 3 EXECUTION

3.1 INSTALLATION

A. Anchor panel fronts rigidly into wall system with approved anchorage devices.
B. Anchor panels in a manner to prevent the enclosure from racking, which may cause the doors to become misaligned.
C. Anchor all panels in accordance with criteria for applicable seismic zone 4.

END OF DOCUMENT

SECTION 13500

PROGRAMMABLE LOGIC CONTROLLER (PLC) CONTROL SYSTEM

PART 1 GENERAL

1.1 SUMMARY

A. Section Includes:
   1. Programmable logic controller (PLC) control system, Human Machine Interface (HMI), Uninterruptible Power Supply (UPS), software, programming, configuration, testing, startup, training, and accessories.
   2. Connection and configuration of PLC and HMI.

B. Related Sections:
   1. Section 13440 (Instrumentation for Process Control: Basic Requirements)
   2. Section 13441 (Control Loop Descriptions)

1.2 REFERENCES

A.	ANSI/IEEE C37.90.2	Trial-Use Standard Withstand Capability of Relay Systems to Radiated Electromagnetic Interference from Transceivers
B.	ANSI/IEEE C62.41	IEEE Recommended Practice on Surge Voltages in Low-Voltage AC Power Circuits
C.	IEEE 802.3	Ethernet Working Group
D.	ISO 9001	Quality Systems-Model for Quality Assurance in Design, Development, Production, Installation and Servicing
E.	NEMA ICS 1	General Standards for Industrial Control and Systems
F.	UL 1449	Standard for Transient Voltage Surge Suppressors

1.3 SUBMITTALS

A. Product Data:
   1. Each product, module, and individual component not integral to another manufactured product to be used.
   2. List of all recommended spares for maintenance purposes with each item separately priced.

B. Shop Drawings
   1. Control Panel Elevation drawings and Bill of Materials.
   2. Control Panel Elementary Wiring Diagram drawings.
   3. Control Panel - Equipment Interconnection Wiring Diagram drawings.
      a. Instrumentation Loops - Instrumentation loops interconnected to more than two pieces of equipment shall be submitted with no more than one instrumentation loop per drawing sheet.
   4. PLC Layout and wiring of I/O devices including HMI and UPS

C. Communications (PLC).
   1. PLC
      a. Registration:
         1) Submit software data, specifications, and catalog / product number for approval. Upon approval of the submitted software data, specifications and catalog / product number, procure approved software with name registered as following:

Sonoma County Water Agency
ATTN: IT Department
404 Aviation Blvd.
Santa Rosa, CA 95403
REF: Service Center Relocation Project – Recycled Water System

Telephone Contact: (707) 526-5370

2) Registration Verification: Submit for approval a letter or official documentation from the software manufacturer stating the software is registered as specified herein. Said letter / official documentation shall describe on one page the specific license information including, but not limited to the Catalog Number, Product Description, Serial Number, Shipping Release Number, Package Status, Product Key (if any), Support End Date, Owner, Contact Number

b. Program: See Section 13441 (Control Loop Descriptions)

c. Program Documentation.
   1) All PLC programming shall be clearly documented, including but not limited to, inputs, outputs, registers, instructions, rungs, branches, subroutines, sections, objectives, unusual procedures, etc. Program tasks shall be grouped by objective and created in separate sections complete with documentation about the overall purpose of the group. Any programming documentation deficiencies shall be remedied by Contractor at no additional cost to the Owner.
   2) Annotated hard copies of the PLC software program
      (a) Written description of each rung's function
      (b) Reference to control loop number for each rung where applicable.
      (c) Reference to instrumentation tag number of I/O devices for each rung where applicable.
      (d) Proved written descriptions completely defining all function blocks used in program.
      (e) Provide list of all addresses referenced in logic diagram with description of data associated with each address.
      (f) All operator interface screens with color selections
   3) Programming software to be used.
   4) Tag names and descriptions shall be used together wherever possible. Tag names shall reflect the description and be consistently applied throughout the program.
   5) An example of the programming and documentation proposed.
   6) Program: Program documentation shall be provided via the programming software visually during the programming mode both online and offline. Submit for approval fully documented program as specified herein.
   7) Program Report: Report documentation shall be provided separately using a PDF file format. Approved use of any other format shall be limited to an insignificant portion of the entire PLC programming required for this project, and shall not deviate from any approved changes. Submit for approval fully documented program as specified herein.

D. Quality Assurance/Control Submittals:
   1. Progress Submittals required during the course of the project:
      a. Format:
         1) Submit actual program and configuration.
         2) Submit Programming Report and Configuration Documentation in PDF format.
      b. Equipment:
         1) PLC and HMI Programs
            (a) Programming Software Registration
            (b) Program
            (c) Program Report
            (d) Tag names and descriptions.
            (e) Memory Consumption. Demonstrate that the final program uses no more than 50% of the entire memory available.
   2. Test Reports:
      a. All results of testing procedures witnessed and signed by Owner. It may be acceptable to combine certain reports. Submit for approval proposed report format.
      b. Factory
         1) Field devices and equipment may be simulated.
         2) Test and demonstrate using Reports 1 – 4 below.
      c. Reports
         1) i/o signals shall be varied over the operating range designed for this project. Discretes shall be switched on and off and the result recorded. Analogs shall be varied and recorded at each of the following percentages: 0%, 10%, 25%, 50%, 75%, 90%, and 100%.
            (a) Report 1: i/o to / from PLC i/o Map Table
            (b) Report 2: i/o to / from PLC Tag Names (Raw Data)
            (c) Report 3: i/o to / from PLC Tag Names (Scaled / Conditioned Data)
            (d) Report 4: i/o to / from PLC registers to be used for SCADA.
            (e) Report 5: Process Loop Tuning.
               (i) Record default values and final tuned values. Trends shall be recorded using the PLC manufacturer's trending feature.
               (ii) PID Process Loops
               (iii) RW Pumps Control
               (iv) Normal Flow Through Mode
               (v) Closed Loop Mode
               (vi) PID Loop Test: With the PID loop in a steady state, record the values and steps taken, and trend the responses (Process Variable and Controlled Variable) under the following tests:
               (vii) A 10% increase in the corresponding setpoint.
               (viii) A 10% decrease in the corresponding setpoint.
               (ix) From a warm start condition. A warm start as referenced herein shall occur as follows: With the PID loop stable and the process components in operation, stop the process. Upon observing the process equipment as stopped and the process variable achieving a steady state, restart the process. As this facility is sometimes unmanned, the process shall reliably resume while experiencing oscillation with not more than a quarter-wave decay.

(x) Ratio Loop Test: With the Ratio loop in a steady state, record the values and steps taken, and trend the responses (Process Variable and Controlled Variable) at each of the following percentages: 0%, 10%, 25%, 50%, 75%, 90%, and 100%.

(f) Report 6: System Integration.

(i) List system control strategies noting how each has been integrated together by design, what interactions can be expected, what test parameters and steps will be implemented and demonstrated under various typical operational circumstances such as:

(ii) Cold start.

(iii) Steady-state change in setpoints by plus / minus 10% in three (3) operation range ranges (lower one-third, middle one-third, and upper one-third).

(iv) Operator Start / Stop in three (3) operation range ranges (lower one-third, middle one-third, and upper one-third).

(v) Process Enable / Disable (eg, high level, low level, etc.) in three (3) operation range ranges (lower one-third, middle one-third, and upper one-third).

3. Certificates:
   a. Upon satisfactory completion of startup, secure written statement from supplier that system is installed in accordance with requirements, is properly started up and is ready for operation by Owner.
   b. Certify that required operation and maintenance training has been fully satisfied.

E. Installation, Operation, and Maintenance Manuals, and Original Software:
1. Include:
   a. PLC components.
   b. HMI components
   c. UPS.
   d. Power supplies.
   e. Surge protectors.
   f. Bill of Materials for control panel.
   g. As-built drawings for control panel.
   h. Configuration and software manuals.
   i. Copies of all Operator interface screens in color
   j. PLC and HMI Manufacturer's Programming Software as specified herein on original disks or other Owner approved format.
   k. Original copy of final As-Left PLC and HMI programs.

F. Closeout Submittals:
1. Verify that hardware components and wiring are recorded on Project Record Shop Drawings.

1.4 QUALITY ASSURANCE

A. All programmed and/or configured software shall become the property of Owner and shall be labeled as such with full-rights thereto. No software/document related to this Project shall be labeled as proprietary or copyright protected or similar declaration.

1.5 MAINTENANCE MATERIALS

A. Furnish Owner with the following extra materials:
1. One spare I/O card of each card type for every 10 cards or fraction thereof installed.

PART 2 PRODUCTS

2.1 ACCEPTABLE MANUFACTURERS

Subject to compliance with the Contract Documents, the following manufacturer is acceptable:

A. Hardware:
   1. PLC: Allen Bradley Compact Logix 1769-L35E Series complete with Ethernet port version 19.11 or higher, no substitutions.
   2. HMI: A Cutler-Hammer PanelMate HMI 10 C E, touch screen, 10 IN operator interface shall be supplied with the PLC. Operator interface shall include an optional interface module with one ethernet port complete with PLC manufacturer's interconnecting cable and corresponding tap to be mounted inside control panel enclosure for data connection to PLC and Plant RTU network, no substitutions.

B. Software:
   1. PLC:
      a. The programming software shall be Allen Bradley's Rockwell Automation RS Logix 5000 Enterprise Series Full Edition (9324-RLD600ENE Node Locked) for Windows XP or Windows 7 with firmware version 19.01 or higher. No substitutions.

2.2 PERFORMANCE AND DESIGN REQUIREMENTS

A. See Section 13440 (Instrumentation for Process Control: Basic Requirements).
B. The PLC system shall accomplish the control requirements of the loop descriptions and Construction Documents.
C. PLC programming shall be documented and factory tested.
D. The PLC system shall operate in ambient conditions of 32 to 140 degrees F temperature and 5 to 95 percent relative humidity without the need for purging or air conditioning.
E. Utilize a power turn-on time delay circuit when powering up or down DC power supplies to ensure power supply output voltage has reached the proper value prior to application of power to solid state logic and output circuits.
F. Environmental Controls:
   1. Furnish circulation fans in solid state control system enclosures.
   2. Over-temperature switches shall be utilized to provide special cooling if required to maintain operating temperatures within the manufacturer's specified range.
   3. Air conditioning applications shall include means of preventing moisture condensation.
G. All PLC control system components shall be capable of meeting or exceeding electromagnetic interference tests per ANSI/IEEE C37.90.2.
H. Incorporate the following minimum safety measures:
   1. Watchdog function to monitor:
      a. Internal processor clock failure.
      b. Processor memory failure.
      c. Loss of communication between processor, Ethernet port, and I/O modules.
      d. Processor ceases to execute logic program.
   2. Safety function wiring:
      a. Emergency shutdown switches shall not be wired into the controller.
   3. Safe wiring:
      a. Unless otherwise specified, activation of alarms and stopping of equipment shall result from the de-energization of control circuits, rather than the energization of control circuits.
      b. Low voltage control signal wires:
         1) Place in conduit, wire gutter, wireway, segregated for that purpose only.

2) Twisted shielded wire pair.
3) Not located in the same conduit or bundle with power wiring.

4. Initial safety conditions:
   a. Utilize program module to dictate output states in a known and safe manner prior to running of control program.
   b. Utilize program each time PLC is re-initiated and the control program activated.
5. Monitoring of internal faults and display:
   a. Internal PLC system status and faults shall be monitored and displayed. Monitored items shall include:
      1) Memory ok/loss of memory.
      2) Processor ok/processor fault.
      3) Scan time overrun.
6. Control of programs:
   a. Do not protect access to PLC program with password protection.
7. Design PLC system with high noise immunity to prevent occurrence of false logic signals resulting from switching transients, relay and circuit breaker noise or conducted and radiated radio frequency interference. Incorporate noise suppression and inductive load suppression design into input, output, and logic modules.
   a. Provide surge suppressors directly across the coils of all inductive devices which are energized by PLC outputs. Install the surge suppressor at location of the inductive device.
8. Operator intervention:
   a. Logic system failure shall not preclude proper operator intervention.
   b. Safety shutdown of equipment or a system shall require manual operator intervention before the equipment or system operation may be reestablished.

2.3 COMPONENTS

A. PLC System Central Processor Unit (CPU):
   1. CPU shall provide communications with other control system as specified.
   2. Memory:
      a. Battery-backed RAM.
      b. EEPROM program back-up:
         1) Automatically download to RAM in the event RAM is corrupted.
   3. Memory battery backup shall be capable of 60 days memory retention with fresh battery.
      a. Provide visual indication of battery status and alarm low battery voltage.
      b. Memory battery backup shall be capable of 14 days memory retention after the "Battery Low" indicating LED is on.
   4. Plug-in card design to allow quick field replacement of faulty devices.
      a. Provide unit designed for field replacement and expansion of memory without requiring rewiring or use of special tools.
   5. 20 percent minimum spare useable memory capacity after all required programming is in place and operating.
   6. Capable of executing all control functions required by the Contract Documents.
   7. Built-in three-mode (proportional-integral-derivative) control capabilities.
      a. As directly selectable algorithms requiring no user knowledge of programming languages.
   8. On line reconfigurable.

9. Lighted status indicators for "RUN" and "FAILURE."
10. Capable of manual or automatic control mode transfer from operating console stations or from within the control strategy. Transfer shall be bumpless and balanceless.
11. Communications. Provide PLC Ethernet port for communications over facility PLC network. Provide all necessary configuration.

B. PLC Power Supply:
1. Provide regulated power units:
   a. Designed to operate with PLC system and shall provide power to:
      1) All components of PLC system.
      2) All two-wire field instruments.
      3) Other devices as indicated or specified.
   b. Capable of supplying PLC system when all of the specified spare capacity is utilized.
   c. Each power supply shall be sized such that it will carry no more than 75 percent of capacity under normal loads.
2. Electrical service to PLC system is 105 to 125 V, 60 HZ, +1 percent, 1 PH power.
3. Separate AC circuit breakers shall be provided for each power supply.
4. If the PLC system is field expandable beyond the specified spare capacity, and if such expansion requires power supply modification, note such requirements in the submittals and allow room for power supply modification in the PLC system enclosure.
5. Capable of meeting or exceeding electrical noise tests, NEMA ICS1-109.60-109.66.
6. Power distribution:
   a. Immune to transients and surges resultant from noisy environment.
   b. Shall provide constant voltage level DC distribution to all devices.

C. Input/output (I/O) Modules.
1. Provide plug-in modular-type I/O racks with cables to connect to all other required PLC system components.
2. Provide I/O system with:
   a. I/O solid state boards with status lights indicating I/O status.
   b. Electric isolation between logic and field device.
   c. Capability of withstanding low energy common mode transient to 1000 V without failure.
   d. Incorporate noise suppression design.
   e. Capable of meeting or exceeding electrical noise tests, NEMA ICS1-109.60-109.66.
   f. Capable of being removed and inserted into the I/O rack under power, without affecting any other I/O modules in the rack.
   g. Install 20 percent spare I/O modules.
3. Input/output connection requirements:
   a. Make connections to I/O subsystem by terminating all field wiring on terminal blocks within the I/O enclosure.
   b. Prewire I/O modules to terminal blocks.
   c. Provide terminal blocks with continuous marking strip.
   d. Size terminals to accommodate all active data base points and spares.
   e. Provide terminals for individual termination of each signal shield.
   f. Field wiring shall not be disturbed when removing or replacing an I/O module.
4. Discrete I/O modules:
   a. Interface to ON/OFF devices.
   b. I/O status indicator on module front.
   c. Voltage rating to match circuit voltage.

d. Output module current rating:
   1) Match maximum circuit current draw.
   2) Minimum 1.0 continuous A/point for 120 V AC applications.
e. Isolated modules for applications where one module interfaces with devices utilizing different sources of power.

5. Discrete outputs shall be fused:
   a. Provide one fuse per common or per isolated output.
   b. Provide blown fuse indication.
   c. External fusing shall be provided if output module does not possess internal fusing.
   d. Fuses provided external to output model shall:
      1) Be in accordance with module manufacturer's specifications.
      2) Be installed at terminal block.
6. Analog I/O modules:
   a. Input modules to accept signals indicated or specified.
   b. Minimum 12 bit resolution.
   c. I/O chassis supplied power for powering connected field devices.
   d. Differential inputs and outputs.
   e. User configurable for desired fault-response state.
   f. Provide output signals as indicated and specified.
   g. Individual D/A converter for each output module.
   h. Individual A/D converter for each input module.
   i. Analog input modules to be 140 ACI03000 or AS-BADU-205 and analog output modules to be 140 AC00200 or AS-BDAU-204.

D. PLC System Software and Programming:
1. Provide programming to accomplish all control and monitoring requirements of the Contract Documents.
2. Programming software shall be as listed in paragraph 2.1B.1.a above.
3. Full documentation capability.
   a. The PLC programming software shall be the latest release of as used by the manufacturer. Submit data identifying the programming software product name and version to be used on the project for approval.
   b. On/off line programming.
4. Offline simulation prior to download.
5. Two step commands requiring operator verification prior to deletion of any programming.

E. Human Machine Interface (HMI)/Operator interface
1. Screen size: 10 inch
2. Screen Option: 65k Color TFT
3. Interface: Resistive Analog Touchscreen
4. Screen saver
5. Conditional visibility
6. Communication Ports: 3 serial; 1 USB; Expansion port for Ethernet Modbus TCP or Local I/O
7. Simultaneous protocols: 3 or 4
8. Ethernet driver
9. Upload/download: Serial, Ethernet, and/or USB
10. Anti-glare and protective screen overlay
11. Data archiving

12. Alarm/event recording and viewing
13. Real-time historical trending
14. On and off-line simulation

2.4 ACCESSORIES

A. Provide all accessories required to furnish a complete PLC control system to accomplish the requirements of the Contract Documents.
B. UPS:
   1. Acceptable manufacturers:
      a. APC.
      b. UPS limited.
      c. Or Approved Equal.
   2. Provide uninterruptible power supply (UPS) to sustain full power to UPS powered loads listed below for a minimum of 60 minutes following loss of primary power and to ensure that the transient power surges and dips do not affect the operation of the PLC system.
      a. UPS powered loads:
         1) All rack mounted PLC components.
         2) Local operator consoles.
         3) All power supplies furnished with the PLC and associated loads.
      b. Input:
         1) 120 V AC +10 percent.
         2) 60 HZ.
         3) Line fuse protection.
      c. Output:
         1) 120 V AC ±5 percent.
         2) 60 HZ.
         3) Short circuit protected.
         4) Instantaneous transfer time.
      d. ANSI/IEEE C62.41 Class A voltage surges of 6000 V attenuated to less than 50 V on the output.
      e. Battery: Maintenance free lead acid.
         1) Install battery in ventilated space in accordance with NEC, Article 480.
C. Power Supply Surge Protection (Hard wired type):
   1. Acceptable manufacturer:
      a. Innovative Technology, Model HS-P-SP.
      b. Tripp Lite.
      c. Or Approved Equal
   2. Utilize for 120 V AC power supplied to PLC.
   3. Design and fabrication:
      a. Components, except for enclosure, shall meet all requirements related to construction, performance, manufacturing/production-line testing, ratings, and markings as stated in UL 1449 for a transient voltage surge suppressor rated as required by these Contract Documents.
      b. Maximum continuous line voltage: 130 V AC.
      c. Shall be rated for maximum continuous line current of protected equipment.
      d. Wired in series with the power supply.
      e. Device protection modes:

1) Line to neutral (L-N).
2) Line to ground (L-G).
3) Neutral to ground (N-G).

f. Peak surge current, 8x20 microsecond waveform:
1) 65,000 amps total.
2) 45,500 amps phase.

g. Maximum values of actual let-through voltage for installed surge protection devices when exposed to a B 3/C1 impulse wave (per ANSI/IEEE C62.41) of 6,000 volts and 3,000 amps shall be in accordance with the following table:

B3/C1 IMPULSE WAVE PER NOMINAL CONTINUOUS VOLTAGE, RMS	LET-THROUGH VOLTAGE, RMS
120 L-N	210
120 L-G	230
120 N-G	380

h. Diagnostics:
1) Local indication that protective circuitry is functioning properly.
2) Contacts for remote annunciation of malfunction.

i. Only firms that have been regularly engaged in the development, design, testing, listing and manufacturing of transient voltage surge suppressors for a period of ten years or more of the types and ratings required and whose products have been in satisfactory use in similar service are acceptable. Time spend as non-manufacturing private label re-seller shall be excluded. Upon request, suppliers or manufacturers shall provide a list of not less than three customer references showing satisfactory operation.

j. Only manufacturers with ISO 9001 certification are acceptable.

D. 24VDC Power Supply:
1. Provide linear regulated power units:
a. Designed to operate separate from PLC system and shall provide power to:
1) Ethernet HUB
2) All two-wire field instruments.
3) Other devices as indicated or specified.
b. Each power supply shall be sized such that it will carry no more than 75 percent of capacity under normal loads.
2. Separate AC circuit breakers shall be provided for each power supply.
3. Separate DC fuses shall be provided for each load / device.
4. Capable of meeting or exceeding electrical noise tests, NEMA ICS1-109.60-109.66.
5. Power distribution:
a. Immune to transients and surges resultant from noisy environment.
b. Shall provide constant voltage level DC distribution to all devices.

E. Data Line Surge Protection:
1. Acceptable manufacturers:
a. Innovative Technology, Model D2S, D4S, or D6S.
b. Or Approved Equal.
c. Only manufacturers with ISO 9001 certification are acceptable.
2. Install surge suppressor at PLC terminations for discrete I/O wiring applications where signal line extends outside of building.

3. Install surge suppressor at both ends of data lines where data line extends outside of building.
4. Series wired.
5. All mode protection (normal and common).
6. Less than 1 nanosecond response time.
7. Maximum let through voltage when exposed to a B3/C1 impulse wave (per ANSI/IEEE C62.41) of 6,000 volts and 3,000 amps:

Max Continuous Voltage	Max Let-Through Voltage
7.5 L-L	20
7.5 L-G	30
7.5 SHD-G	170
15 L-L	30
15 L-G	40
15 SHD-G	170
36 L-L	70
36 L-G	70
36 SHD-G	170

F. Communications
1. Industrial Ethernet Switch
   a. 4 port 10/100BaseTX Industrial Ethernet Switch
   b. Four 10/100BaseTX RJ-45 Ports
   c. Supports Full/Half Duplex Operation
   d. Auto Senses Speed and Flow Control
   e. MDIX Auto Cable Sensing (RJ-45)
   f. Compact Size, Smaller Footprint
   g. Full IEEE 802.3 Compliance
   h. Class 1, Div 2 Hazardous Location Certification
   i. Rugged Industrial DIN-Rail Enclosure
   j. Extended Environmental Specifications
   k. -20ºC to 70ºC Operating Temperature
   l. Plug & Play Operation
   m. Redundant Power Inputs (10-30VDC)
   n. N-Tron 304TX, or Approved Equal.
2. Built-in Ethernet Port
   a. 10/100Base Mbps

PART 3 EXECUTION

3.1 INSTALLATION

A. Install PLC control system in accordance with manufacturer's written instructions.
B. The PLC control panel shall be furnished complete as specified with the PLC and UPS, and shall be labeled Storage Tank Control Panel.

3.2 FIELD QUALITY CONTROL

A. Employ and pay for services of equipment manufacturer's field service representative(s) to:

1. Inspect equipment covered by these Specifications.
2. Supervise adjustments and installation checks.
3. Maintain and submit an accurate daily log of all commissioning functions.
   a. All commissioning functions may be witnessed by Owner.
   b. All reports shall be cosigned by Contractor and Owner if witness required by Specifications.
4. Conduct startup of equipment and perform operational checks.

3.3 DEMONSTRATION

A. Equipment demonstration:
   1. System meets performance
   2. Verification that the Owner will not be required to take more than three steps to get to any control / mode selection, or setpoint.
   3. Submit the PLC with HMI screen shots and control programs to provide a simulated demonstration of system functionality prior to final approval of PLC control system by Owner and prior to site delivery of equipment
      a. Equipment demonstration shall be a minimum of 30 days prior to start-up and testing
      b. Owner will provide comments on HMI based on live demonstration
B. On-Site Training:
   1. Provide employee of the manufacturer or certified representative to provide one Day of operating and maintenance training at the Site after the system has successfully undergone all field testing and acceptance procedures.
      a. As a minimum, training shall cover:
         1) Hardware overview
         2) Software overview
         3) Program overview
         4) Maintenance
         5) Troubleshooting
         6) Operation, including changing set points, and passwords

4 OPERATION

A. The treatment plant recycled water system shall not be placed in service or operated until the following conditions are met.
   1. Provide Owner with written notice 72 hours prior to the equipment or system startup.
   2. For the recycled water system PLC, the Contractor shall provide PLC register addressing and HMI programming code to Owner as the Contractor develops and establishes PLC and HMI functionality during Demonstration period described above. The contractor shall permit Owner to communicate with PLC and/or HMI during the development or activation of the project.
   3. The Contractor shall verify that the analog signals for the physical parameters shall be calibrated to the accuracy specified.
B. The Contractor shall be responsible for providing and installing signal isolation devices as required or as specified.
C. The Contractor shall be responsible for maintaining the analog signal and signal accuracy for one year after Final Completion.

4.2 INPUTS/OUTPUTS

A. Digital Input:

1. RW Pump 1, Run
2. RW Pump 1 VFD, Failed
3. RW Pump 1, PLC Mode
4. RW Pump 1, Manual Mode
5. RW Pump 2 E-Stop, Alarm
6. RW Pump 2, Run
7. RW Pump 2 VFD, Failed
8. RW Pump 2, PLC Mode
9. RW Pump 2, Manual Mode
10. Solenoid Valve 11, Open
11. Storage Tank Low, low level

B. Digital Output
1. RW Pump 1 Start-Stop
2. RW Pump 2 Start-Stop
3. Solenoid Valve 11, Open-Close

C. Analog Input:
1. RW Pump 1 Speed
2. RW Pump 2 Speed
3. Main Discharge line Pressure
4. Storage Tank Level
5. RW Flow
6. RWR Flow
7. RW Temperature
8. RWR Temperature

D. Analog Output:
1. RW Pump 1 Speed Set
2. RW Pump 2 Speed Set

END OF SECTION

DIVISION 15

MECHANICAL

SECTION 15050

BASIC MECHANICAL MATERIALS AND METHODS

PART 1 GENERAL

1.1 SUMMARY

A. Section includes:

1. Piping materials and installation instructions common to most piping systems.
2. Mechanical sleeve seals.
3. Sleeves.
4. Escutcheons
5. Vibration Isolation
6. Equipment installation requirements common to equipment sections.
7. Painting and finishing.
8. Supports and anchorages.

B. Related Sections

1. Section 15181 (Hydronic Piping and Specialties)
2. Section 15793 (Recycled Water System Piping and Specialties)
3. Section 15815 (Ductwork and Accessories)

1.2 REFERENCES

A. ASME B1.20.1 – Pipe Threads, General Purpose (Inch)

B. ASTM B-32 – Standard Practice for Preparation of Iron Castings for Electroplating

C. ASTM A-36 – Standard Specification for Carbon Structural steel

D. ASTM A-153 – Standard Specification for Zinc Coating (Hot-Dip) on Iron and Steel Hardware

E. ASTM A-307 – Standard Specification for Carbon Steel Bolts and Studs, 60,000 PSI Tensile Strength

F. ASTM A-193 – Standard Specification for Alloy-Steel and Stainless Steel Bolting for High Temperature or High Pressure Service and Other Special Purpose Applications.

G. ASTM F-1667 – Standard Specification for Driven Fasteners: Nails, Spikes and Staples

H. MFMA-3 (Metal Framing Manufacturers Association) –Strut Channels and Components

I. MSS SP-58 – Pipe Hangers and Supports – Materials, Design, Manufacture, Selection, Application, and Installation.

J. MSS SP-69 – Pipe Hangers, Selection and Application

K. UL Fire Resistance Directory

1.3 DEFINITIONS

A. Finished Spaces: Spaces other than mechanical and electrical equipment rooms, furred spaces, pipe and duct shafts, unheated spaces immediately below roof, spaces above ceilings, unexcavated spaces, crawlspaces, and tunnels.

B. Exposed, Interior Installations: Exposed to view indoors. Examples include finished occupied spaces, mechanical equipment rooms, and mechanical enclosures.

C. Exposed, Exterior Installations: Exposed to view outdoors or subject to outdoor ambient temperatures and weather conditions. Examples include rooftop locations.

D. Concealed, Interior Installations: Concealed from view and protected from physical contact by building occupants. Examples included above ceilings and in duct shafts.

E. PE: Polyethylene plastic.

1.4 SUBMITTALS

A. Product Data:

1. Dielectric fittings.
2. Mechanical Sleeve seals.
3. Escutcheons.

B. Quality Assurance/Quality Control Submittals

1. Welding certificates.

2. Vibration Isolation:

a. Schedule of Materials
b. Equipment Details

1) Equipment Bases or hangers
2) Piping
3) Ductwork

c. Include natural frequency, spring diameters, deflection, compressed spring height, and damping tests.
d. Submittals shall include a hanger drawing showing the 30° capability.

1.5 DELIVERY, STORAGE, AND HANDLING

A. Deliver pipes and tubes with factory-applied end caps. Maintain end caps through shipping, storage, and handling to prevent pipe end damage and to prevent entrance of dirt, debris, and moisture.

PART 2 PRODUCTS

2.1 MANUFACTURERS

A. Vibration Isolation Materials

1. Mason Industries
2. Or Approved Equal

B. Fill Caulk/Sealant

1. 3M COMPANY - IC 15WB, CP 25WB+ caulk or FB-3000 WT sealant.
2. Or Approved Equal

C. Firestop Caulk

1. MINNESOTA MINING & MFG CO - FireDam 150+
2. Or Approved Equal

2.2 PIPE, TUBE, AND FITTINGS

A. Refer to Section 15181 (Hydronic Piping and Specialties) for pipe, tube, and fitting materials and joining methods up to and within the Service Center Buildings.

B. Pipe Threads: ASME B1.20.1 for factory-threaded pipe and pipe fittings.

2.3 PIPE CASINGS

A. Provide rigid nonmetallic conduit and fittings (PVC) as pipe casings at floor penetrations and underground building entries for the entry of recycled water piping. The conduit shall serve as a casing for ease of installation and removal of the piping into the building

2.4 BUILDING PENETRATIONS

A. Metallic Pipe Through fire Rated Stud Wall - System Design Number V438.

1. Wall Assembly for Penetrations: The 3 hr fire rated gypsum board/stud wall assembly shall be constructed of the materials and in the manner described in the individual U300 or U400 Series Wall or Partition Design in the UL Fire Resistance Directory and shall include the following construction features:

   a. Studs: Wall framing shall consist of 1-5/8" steel studs, 24 inches on center.
   b. Gypsum Board: Three layers of ½" Fire Shield C Gypsum Board screw attached to each side of steel studs. Base, second and third layer vertical, face layer horizontal. All gypsum board joints staggered except long joints of base and second layer fall on the same studs.

      1) The hourly F Rating of the firestop system is equal to the hourly fire rating of the wall assembly in which it is installed.

2. Through Penetrants: One metallic pipe, conduit, tubing or flexible metal pipe. Installed concentrically or eccentrically within opening. Annular space between penetrant and periphery of opening to be min 0 in. (point contact) to max 2 in. (0 mm to max 51 mm). Penetrant to be rigidly supported on both sides of wall. The following types and sizes of penetrants may be used:

a. Steel Pipe: Nom 8 in. (203 mm) diameter (or smaller) Schedule 5 (or heavier) steel pipe.
b. Iron Pipe: Nom 8 in. (203 mm) diameter (or smaller) cast or ductile iron pipe.
c. Conduit: Nom 4 in. (102 mm) diameter (or smaller) steel electrical metallic tubing (EMT) or nom 6 in. rigid steel conduit.
d. Copper Tubing - Nom 4 in. (102 mm) diameter (or smaller) Type L (or heavier) copper tubing.
e. Copper Pipe: Nom 4 in. (102 mm) diameter (or smaller) Regular (or heavier) copper pipe.

3. Fill, Void or Cavity Material (bearing UL Classification Mark) - Caulk or Sealant - Min 5/8 in. (16 mm) thickness of caulk or sealant applied within annulus, flush with both surfaces of wall. Min 1/4 in. (6 mm) diameter bead of caulk or sealant applied to gypsum board/penetrant interface at point contact location on both sides of wall

B. Metallic Pipe with Sleeve Through Concrete Floor or Wall – System Design Number C-AJ-1366

1. Floor or Wall Assembly: Min 2-1/2 in. thick reinforced lightweight or normal weight (100-150 per cubic foot) concrete. Wall may also be constructed of any UL Classified Concrete Blocks. Max diameter of opening is 11-5/8 in.

a. See Concrete Blocks (CAZT) category in the Fire Resistance Directory for names of manufacturers.

2. Steel Sleeve: 10 in. diameter (or smaller) Schedule 10 (or heavier) steel pipe sleeve cast into concrete floor or wall. Sleeve to be flush with top and bottom surfaces of floor or both surfaces of wall. The inside of the sleeve shall be such that the annular space shall not exceed 7/8 in. from the OD of the penetrant to the ID of the steel sleeve.

3. Through Penetrants: One metallic pipe, tubing or conduit to be installed either concentrically or eccentrically within the firestop system. The annular space between tube and periphery of opening shall be min 0 in. to max 7/8 in. Penetrants to be rigidly supported on both sides of floor assembly. The following types and sizes of metallic pipes, tubing or conduit may be used:

a. Steel Pipe - Nom 8 in. diameter (or smaller) Schedule 10 (or heavier) steel pipe.
b. Iron Pipe - Nom 8 in. diameter (or smaller) cast or ductile iron pipe.
c. Conduit - Nom 6 in. diameter (or smaller) rigid steel conduit.
d. Conduit - Nom 4 in. (or smaller) electrical metallic tubing.
e. Copper Tubing - Nom 4 in. diameter (or smaller) Type L (or heavier) copper tube.
f. Copper Pipe - Nom 4 in. diameter (or smaller) Regular (or heavier) copper pipe.

4. Firestop System

a. Packing Material - Min 2 in. thickness of min 4 per cubic foot mineral wool batt insulation firmly packed into opening as a permanent form. Packing material to be recessed from top surface of floor to accommodate the required thickness of fill material.
b. Fill,Void or Cavity Materials (Bearing the UL Classification Mark) - Caulk - Min 1/2 in. thickness of caulk applied within the annulus, flush with top surface of floor and/or both surfaces of the wall. Min 1/2 in. diameter bead of caulk applied to the penetrant/concrete interface at the point contact location on the top surface of floor.

2.5 ESCUTCHEONS

A. Description: Manufactured wall and ceiling escutcheons and floor plates, with an ID to closely fit around pipe, tube and insulation of insulated piping and an OD that completely covers opening.

B. One-Piece, Deep-Pattern Type: Deep-drawn, box-shaped brass with polished chrome-plated finish.

C. One-Piece, Cast Brass Type: With set screw.

1. Finish: Polished chrome-plated.

D. One-Piece, Stamped Steel Type: With set screw or spring clips and chrome-plated finish.

E. One-Piece, Floor-Plate Type: Cast-iron floor plate.

F. Install escutcheons for penetrations of walls, ceilings, and floors according to the following:

1. New Piping:

a. Piping with Fitting or Sleeve Protruding from Wall: One-piece, deep-pattern type.
b. Chrome-Plated Piping: One-piece, cast brass type with polished chrome-plated finish.
c. Insulated Piping: One-piece, stamped-steel type with spring clips.
d. Bare Piping at Wall and Floor Penetrations in Finished Spaces: One-piece, stamped steel type.
e. Bare Piping at Ceiling Penetrations in Finished Spaces: One-piece, stamped-steel type and set screw.
f. Bare Piping in Unfinished Service Spaces: One-piece, cast-brass type with polished chrome-plated finish.
g. Bare Piping in Equipment Rooms; One-piece, stamped-steel type with set screw or spring clips.

2.6 PIPE HANGERS

A. Carbon-Steel Pipe Hangers and Supports:

1. Description: MSS SP-58, Types 1 through 58, factory-fabricated components.
2. Galvanized Metallic Coatings: Pregalvanized or hot dipped.
3. Nonmetallic Coatings: Plastic coating, jacket, or liner.
4. Padded Hangers: Hanger with fiberglass or other pipe insulation pad or cushion to support bearing surface of piping.
5. Hanger Rods: Continuous-thread rod, nuts, and washer made of carbon steel.

B. Trapeze Pipe Hangers

1. Description: MSS SP-69, Type 59, shop- or field-fabricated pipe-support assembly made from structural carbon-steel shapes with MSS SP-58 carbon-steel hanger rods, nuts, saddles, and U-bolts.

2.7 EQUIPMENT SUPPORTS

A. Description: Welded, shop- or field-fabricated equipment support made from structural carbon-steel shapes.

B. Structural Safety Factor: Allowable strength in tension, shear, and pullout force of components shall be at least four times the maximum seismic forces to which they will be subjected.

C. Seismic Supports:

1. Channel Support System: MFMA-3, shop- or field-fabricated support assembly made of slotted steel channels with accessories for attachment to braced component at one end and to building structure at the other end and other matching components and with corrosion-resistant coating; and rated in tension, compression, and torsion forces.
2. Restraint Cables: ASTM A 603 galvanized or ASTM A 492 stainless-steel cables with end connections made of steel assemblies with thimbles, brackets, swivel, and bolts designed for restraining cable service; and with a minimum of two clamping bolts for cable engagement.

2.8 FASTENER SYSTEMS

A. Powder-Actuated Fasteners: Threaded-steel stud, for use in hardened portland cement concrete with pull-out, tension, and shear capacities appropriate for supported loads and building materials where used.

B. Mechanical-Expansion Anchors: Insert-wedge-type, zinc-coated steel anchors, for use in hardened portland cement concrete; with pull-out, tension, and shear capacities appropriate for supported loads and building materials where used.

C. Nails:

1. Conform to requirements of ASTM F 1667.

D. Machine Bolts and Anchor Bolts:

1. Conform to requirements of ASTM A-307.

E. All-Thread Rod:

1. 3/8” Diameter.
2. Conform to requirements of ASTM A36 or ASTM A193.

F. Connectors and fasteners exposed to weather shall be one of the following:

1. Hot-dipped galvanized, zinc-coated steel conforming to ASTM A153.
2. Stainless steel.

2.9 VIBRATION ISOLATION

A. Vibration Isolation for Mechanical Equipment:

1. Spring isolators shall be free standing and laterally stable without any housing and complete with a molded neoprene cup or 1/4"neoprene acoustical friction pad between the baseplate and the support. All mountings shall have leveling bolts that must be rigidly bolted to the equipment. Installed and operating heights shall be equal. The ratio of the spring diameter divided by the compressed spring height shall be no less than 0.8. Springs shall have a minimum additional travel to solid equal to 50% of the rated deflection.

2. Hangers shall consist of rigid steel frames containing minimum 1-1/4" thick neoprene elements at the top and a steel spring with general characteristics as in mechanical details, seated in a steel washer reinforced neoprene cup on the bottom. The neoprene element and the cup shall have neoprene bushings projecting through the steel box. In order to maintain stability the boxes shall not be articulated as clevis hangers nor the neoprene element stacked on top of the spring. Spring diameters and hanger box lower hole sizes shall be large enough to permit the hanger rod to swing through a 30° arc from side to side before contacting the cup bushing and short circuiting the spring.

3. Hangers shall be pre-compressed and locked at the rated deflection by means of a resilient upstop to keep the piping or equipment at a fixed elevation during installation. The hangers shall be designed with a release mechanism to free the spring after the installation is complete and the hanger is subjected to its full load. Deflection shall be clearly indicated by means of a scale.

4. The first four pipe hangers in the main lines near the mechanical equipment shall be isolated from vibration. Hangers supporting piping 2"(50mm) and larger in all other locations throughout the building shall be isolated by spring hangers. Floor supported piping shall rest on neoprene or spring isolators. The first four isolators from the isolated equipment shall have the same static deflection as specified for the mountings under the connected equipment.

5. All air ducts with a cross section of $2ft^2$ or larger shall be isolated from the building structure by acoustical hangers or floor supports, installed per Mason Industries (or Approved Equal) recommendations, with a minimum deflection of 0.75".

PART 3 EXECUTION

3.1 PIPING SYSTEMS – COMMON REQUIREMENTS

A. See Section 15181 (Hydronic Piping and Specialties) for other piping requirements.

B. Install piping in concealed locations, unless otherwise indicated and except in equipment rooms and service areas.

C. Install piping indicated to be exposed and piping in equipment rooms and service areas at right angles or parallel to building walls. Diagonal runs are prohibited unless specifically indicated otherwise.

D. Install piping above accessible ceilings to allow sufficient space for ceiling panel removal.

E. Install piping to permit valve servicing.

F. Install piping at indicated slopes.

G. Install piping free of sags and bends.

H. Piping Sleeves: Installed as described in this section.

I. Install fittings for changes in direction and branch connections.

J. Install piping to allow application of insulation.

K. Select system components with pressure rating equal to or greater than system operating pressure.

L. Permanent sleeves are not required for holes formed by removable PE sleeves.

M. Install sleeves for pipes passing through concrete and masonry walls and concrete floor and roof slabs.

N. Verify final equipment locations for roughing-in.

3.2 PIPING CONNECTIONS

A. Make connections according to the following, unless otherwise indicated:

1. Install unions, in piping 2-inches and smaller, adjacent to each valve and at final connection to each piece of equipment.
2. Install flanges, in piping 2-1/2 inches and larger, adjacent to flanged valves and at final connection to each piece of equipment.
3. Wet Piping Systems: Install dielectric coupling and nipple fittings to connect piping materials of dissimilar metals.

3.3 EQUIPMENT INSTALLATION – COMMON REQUIREMENTS

A. Install equipment to allow maximum possible headroom unless specific mounting heights are not indicated.

B. Install equipment level and plumb, parallel and perpendicular to other building systems and components in exposed interior spaces, unless otherwise indicated.

C. Install mechanical equipment to facilitate service, maintenance, and repair or replacement of components. Connect equipment for ease of disconnecting, with minimum interference to other installations. Extend grease fittings to accessible locations.

D. All equipment and ductwork shall be laterally restrained according to the requirements of Chapter 16 of CBC or SMACNA Guidelines for the Seismic restrains of mechanical equipment and piping systems, whichever is most stringent shall govern.

E. Install equipment to allow right of way for piping installed at required slope.

F. Arrange for pipe spaces, chases, slots, and openings in building structure during progress of construction, to allow for mechanical installations.

G. Coordinate installation of required supporting devices and set sleeves in poured-in-place concrete and other structural components as they are constructed.

H. Coordinate requirements for access panels and doors for mechanical items requiring access that are concealed behind finished surfaces.

3.4 PAINTING

A. Damage and Touchup: Repair marred and damaged factory-painted finishes with materials and procedures to match original factory finish.

3.5 ERECTION OF METAL SUPPORTS AND ANCHORAGES

A. Cut, fit, and place miscellaneous metal supports accurately in location, alignment, and elevation to support and anchor mechanical materials and equipment.

B. Install the following pipe attachments:

1. Adjustable steel clevis hangers for individual horizontal piping less than 20 feet long.
2. Adjustable roller hangers and spring hangers for individual horizontal piping 20 feet or longer.
3. Pipe Roller: MSS SP-58, Type 44 for multiple horizontal piping 20 feet or longer, supported on a trapeze.
4. Spring hangers to support vertical runs.
5. Provide copper-clad hangers and supports for hangers and supports in direct contact with copper pipe.

C. Install hangers for copper and steel piping with the following maximum spacing and minimum rod sizes.

		Hanger Spacing	
Pipe Size (inches)	**Rod Size (inches)**	**Steel Pipe (feet)**	**Copper Pipe (feet)**
1 and smaller	3/8	8	6
1-1/4 to 1-1/2	3/8	10	8
2	3/8	10	8
2-1/2 to 3-1/2	1/2	12	12
4 to 5	5/8	16	14
6	3/4	16	16

D. Support vertical runs at roof, at each floor, and at 10 foot intervals between floors.

END OF SECTION

SECTION 15086

DUCT INSULATION

PART 1 - GENERAL

1.1 SUMMARY

A. Section includes insulating the following duct services:

1. Indoor, concealed supply and outdoor air.
2. Indoor, exposed supply and outdoor air.
3. Indoor, concealed exhaust between isolation damper and penetration of building exterior.

B. Related Sections:

1. Section 15088 (HVAC Piping Insulation)
2. Section 15815 (Ductwork and Accessories)

1.2 SUBMITTALS

A. Product Data: For each type of product indicated. Include thermal conductivity, water-vapor permeance thickness, and jackets (both factory- and field-applied if any).

B. Color Samples: For insulation with ASJ, glass-cloth or other paintable jacket materials.

1.3 QUALITY ASSURANCE

A. Surface-Burning Characteristics: For insulation and related materials, as determined by testing identical products according to ASTM E 84, by a testing agency acceptable to authorities having jurisdiction. Factory label insulation and jacket materials and adhesive, mastic, tapes, and cement material containers, with appropriate markings of applicable testing agency.

1. Insulation Installed Indoors: Flame-spread index of 25 or less, and smoke-developed index of 50 or less.

1.4 DELIVERY, STORAGE, AND HANDLING

A. Packaging: Insulation material containers shall be marked by manufacturer with appropriate ASTM standard designation, type and grade, and maximum use temperature.

1.5 COORDINATION

A. Coordinate sizes and locations of supports, hangers, and insulation shields specified in Section 15050 (Basic Mechanical Materials and Methods).

B. Coordinate clearance requirements with duct Installer for duct insulation application. Before preparing ductwork Shop Drawings, establish and maintain clearance requirements for installation of insulation and field-applied jackets and finishes and for space required for maintenance.

1.6 SCHEDULING

A. Schedule insulation application after pressure testing systems and, where required, after installing and testing heat tracing. Insulation application may begin on segments that have satisfactory test results.

B. Complete installation and concealment of plastic materials as rapidly as possible in each area of construction.

PART 2 - PRODUCTS

2.1 INSULATION MATERIALS

A. Comply with requirements in "Duct Insulation Schedule, General," and "Indoor Duct and Plenum Insulation Schedule" articles for where insulating materials shall be applied, per paragraph 2.4 of this Section.

B. Products shall not contain asbestos, lead, mercury, or mercury compounds.

C. Foam insulation materials shall not use CFC or HCFC blowing agents in the manufacturing process.

D. Mineral-Fiber Blanket Insulation: Mineral or glass fibers bonded with a thermosetting resin. Comply with ASTM C 553, Type II and ASTM C 1290, Type II with factory-applied vinyl jacket. Factory-applied jacket requirements are specified in "Factory-Applied Jackets" Article.

1. Manufacturers:

a. CertainTeed Corp.; SoftTouch Duct Wrap.
b. Johns Manville; Microlite.
c. Knauf Insulation; Friendly Feel Duct Wrap.
d. Manson Insulation Inc.; Alley Wrap.
e. Owens Corning; SOFTR All-Service Duct Wrap.
f. Or Approved Equal.

2.2 ADHESIVES

A. Materials shall be compatible with insulation materials, jackets, and substrates and for bonding insulation to itself and to surfaces to be insulated unless otherwise indicated.

B. Adhesives, adhesive bonding primers, adhesive primers, sealants, sealant primers, and caulks shall comply with local or regional air pollution control or air quality management district rules where applicable or SCAQMD rule 1168 VOC limits, as shown in Table 4.504.1 or 4.504.2, as applicable per 2010 CalGreen, Section 5.504.4.1.

C. Mineral-Fiber Adhesive: Comply with MIL-A-3316C, Class 2, Grade A.

1. Manufacturers:

a. Childers Brand, Specialty Construction Brands, Inc., a business of H. B. Fuller Company; CP-127.
b. Eagle Bridges - Marathon Industries; 225.
c. Foster Brand, Specialty Construction Brands, Inc., a business of H. B. Fuller Company; 85-60/85-70.
d. Mon-Eco Industries, Inc.; 22-25.
e. Or Approved Equal.

2. For indoor applications, adhesive shall have a VOC content of 80 g/L or less when calculated according to 40 CFR 59, Subpart D (EPA Method 24).

D. ASJ Adhesive, and FSK Jacket Adhesive: Comply with MIL-A-3316C, Class 2, Grade A for bonding insulation jacket lap seams and joints.

1. Manufacturers:

a. Childers Brand, Specialty Construction Brands, Inc., a business of H. B. Fuller Company; CP-82.
b. Eagle Bridges - Marathon Industries; 225.
c. Foster Brand, Specialty Construction Brands, Inc., a business of H. B. Fuller Company; 85-50.
d. Mon-Eco Industries, Inc.; 22-25.
e. Or Approved Equal.

2. For indoor applications, adhesive shall have a VOC content of 50 g/L or less when calculated according to 40 CFR 59, Subpart D (EPA Method 24).

2.3 MASTICS

A. Materials shall be compatible with insulation materials, jackets, and substrates; comply with MIL-PRF-19565C, Type II.

1. For indoor applications, use mastics that have a VOC content of 50 g/L or less when calculated according to 40 CFR 59, Subpart D (EPA Method 24).

B. Vapor-Barrier Mastic: Water based; suitable for indoor use on below ambient services.

1. Manufacturers:

a. Foster Brand, Specialty Construction Brands, Inc., a business of H. B. Fuller Company; 30-80/30-90.
b. Vimasco Corporation; 749.
c. Or Approved Equal.

2. Water-Vapor Permeance: ASTM E 96/E 96M, Procedure B, 0.013 perm at 43-mil dry film thickness.
3. Service Temperature Range: Minus 20 to plus 180 deg F
4. Solids Content: ASTM D 1644, 58 percent by volume and 70 percent by weight.
5. Color: White.

C. Breather Mastic: Water based; suitable for indoor and outdoor use on above ambient services.

1. Manufacturers:

a. Childers Brand, Specialty Construction Brands, Inc., a business of H. B. Fuller Company; CP-10.
b. Eagle Bridges - Marathon Industries; 550.
c. Foster Brand, Specialty Construction Brands, Inc., a business of H. B. Fuller Company; 46-50.
d. Mon-Eco Industries, Inc.; 55-50.
e. Vimasco Corporation; WC-1/WC-5.
f. Or Approved Equal.

2. Water-Vapor Permeance: ASTM F 1249, 1.8 perms at 0.0625-inch dry film thickness.
3. Service Temperature Range: Minus 20 to plus 180 deg F.
4. Solids Content: 60 percent by volume and 66 percent by weight.
5. Color: White.

2.4 FACTORY-APPLIED JACKETS

A. Insulation system schedules indicate factory-applied jackets on various applications. When factory-applied jackets are indicated, comply with the following:

1. Vinyl Jacket: White vinyl with a permeance of 1.3 perms when tested according to ASTM E 96/E 96M, Procedure A, and complying with NFPA 90A and NFPA 90B.

2.5 TAPES

A. ASJ Tape: White vapor-retarder tape matching factory-applied jacket with acrylic adhesive, complying with ASTM C 1136.

1. Manufacturers:

   a. ABI, Ideal Tape Division; 428 AWF ASJ.
   b. Avery Dennison Corporation, Specialty Tapes Division; Fasson 0836.
   c. Compac Corporation; 104 and 105.
   d. Venture Tape; 1540 CW Plus, 1542 CW Plus, and 1542 CW Plus/SQ.
   e. Or Approved Equal.

2. Width: 3 inches.
3. Thickness: 11.5 mils.
4. Adhesion: 90 ounces force/inch in width.
5. Elongation: 2 percent.
6. Tensile Strength: 40 lbf/inch in width.
7. ASJ Tape Disks and Squares: Precut disks or squares of ASJ tape.

2.6 SECUREMENTS

A. Bands:

1. Manufacturers:

   a. ITW Insulation Systems; Gerrard Strapping and Seals.
   b. RPR Products, Inc.; Insul-Mate Strapping, Seals, and Springs.
   c. Or Approved Equal.

2. Stainless Steel: ASTM A 167 or ASTM A 240/A 240M, Type 304; 0.015 inch thick, 1/2 inch wide with wing seal or closed seal.
3. Aluminum: ASTM B 209, Alloy 3003, 3005, 3105, or 5005; Temper H-14, 0.020 inch thick, 1/2 inch wide with wing seal or closed seal.
4. Springs: Twin spring set constructed of stainless steel with ends flat and slotted to accept metal bands. Spring size determined by manufacturer for application.

PART 3 - EXECUTION

3.1 EXAMINATION

A. Examine substrates and conditions for compliance with requirements for installation tolerances and other conditions affecting performance of insulation application.

1. Verify that systems to be insulated have been tested and are free of defects.
2. Verify that surfaces to be insulated are clean and dry.

B. Proceed with installation only after unsatisfactory conditions have been corrected.

3.2 PREPARATION

A. Surface Preparation: Clean and dry surfaces to receive insulation. Remove materials that will adversely affect insulation application.

3.3 GENERAL INSTALLATION REQUIREMENTS

A. Install insulation materials, accessories, and finishes with smooth, straight, and even surfaces; free of voids throughout the length of ducts and fittings.

B. Install insulation materials, vapor barriers or retarders, jackets, and thicknesses required for each item of duct system as specified in insulation system schedules.

C. Install accessories compatible with insulation materials and suitable for the service. Install accessories that do not corrode, soften, or otherwise attack insulation or jacket in either wet or dry state.

D. Install insulation with longitudinal seams at top and bottom of horizontal runs.

E. Install multiple layers of insulation with longitudinal and end seams staggered.

F. Keep insulation materials dry during application and finishing.

G. Install insulation with tight longitudinal seams and end joints. Bond seams and joints with adhesive recommended by insulation material manufacturer.

H. Install insulation with least number of joints practical.

I. Where vapor barrier is indicated, seal joints, seams, and penetrations in insulation at hangers, supports, anchors, and other projections with vapor-barrier mastic.

1. Install insulation continuously through hangers and around anchor attachments.
2. For insulation application where vapor barriers are indicated, extend insulation on anchor legs from point of attachment to supported item to point of attachment to structure. Taper and seal ends at attachment to structure with vapor-barrier mastic.
3. Install insert materials and install insulation to tightly join the insert. Seal insulation to insulation inserts with adhesive or sealing compound recommended by insulation material manufacturer.

J. Apply adhesives, mastics, and sealants at manufacturer's recommended coverage rate and wet and dry film thicknesses.

K. Install insulation with factory-applied jackets as follows:

1. Draw jacket tight and smooth.
2. Cover circumferential joints with 3-inch-wide strips, of same material as insulation jacket. Secure strips with adhesive and outward clinching staples along both edges of strip, spaced 4 inches o.c.
3. Overlap jacket longitudinal seams at least 1-1/2 inches. Clean and dry surface to receive self-sealing lap. Staple laps with outward clinching staples along edge at 2 inches o.c.

    a. For below ambient services, apply vapor-barrier mastic over staples.

4. Cover joints and seams with tape, according to insulation material manufacturer's written instructions, to maintain vapor seal.
5. Where vapor barriers are indicated, apply vapor-barrier mastic on seams and joints and at ends adjacent to duct flanges and fittings.

L. Cut insulation in a manner to avoid compressing insulation more than 75 percent of its nominal thickness.

M. Finish installation with systems at operating conditions. Repair joint separations and cracking due to thermal movement.

N. Repair damaged insulation facings by applying same facing material over damaged areas. Extend patches at least 4 inches beyond damaged areas. Adhere, staple, and seal patches similar to butt joints.

3.4 PENETRATIONS

A. Insulation Installation at Roof Penetrations: Install insulation continuously through roof penetrations.

1. Seal penetrations with flashing sealant.
2. For applications requiring only indoor insulation, terminate insulation above roof surface and seal with joint sealant. For applications requiring indoor and outdoor insulation, install insulation for outdoor applications tightly joined to indoor insulation ends. Seal joint with joint sealant.
3. Extend jacket of outdoor insulation outside roof flashing at least 2 inches below top of roof flashing.
4. Seal jacket to roof flashing with flashing sealant.

B. Insulation Installation at Fire-Rated Wall and Partition Penetrations: Terminate insulation at fire damper sleeves for fire-rated wall and partition penetrations. Externally insulate damper sleeves to match adjacent insulation and overlap duct insulation at least 2 inches.

3.5 INSTALLATION OF MINERAL-FIBER INSULATION

A. Blanket Insulation Installation on Ducts and Plenums: Secure with adhesive and insulation pins.

1. Apply adhesives according to manufacturer's recommended coverage rates per unit area, for 100 percent coverage of duct and plenum surfaces.
2. Apply adhesive to entire circumference of ducts and to all surfaces of fittings and transitions.
3. Install either capacitor-discharge-weld pins and speed washers or cupped-head, capacitor-discharge-weld pins on sides and bottom of horizontal ducts and sides of vertical ducts as follows:

    a. On duct sides with dimensions 18 inches and smaller, place pins along longitudinal centerline of duct. Space 3 inches maximum from insulation end joints, and 16 inches o.c.
    b. On duct sides with dimensions larger than 18 inches, place pins 16 inches o.c. each way, and 3 inches maximum from insulation joints. Install additional pins to hold insulation tightly against surface at cross bracing.
    c. Pins may be omitted from top surface of horizontal, rectangular ducts and plenums.
    d. Do not overcompress insulation during installation.
    e. Impale insulation over pins and attach speed washers.
    f. Cut excess portion of pins extending beyond speed washers or bend parallel with insulation surface. Cover exposed pins and washers with tape matching insulation facing.

4. For ducts and plenums with surface temperatures below ambient, install a continuous unbroken vapor barrier. Create a facing lap for longitudinal seams and end joints with insulation by removing 2 inches from one edge and one end of insulation segment. Secure laps to adjacent insulation section with 1/2-inch outward-clinching staples, 1 inch o.c. Install vapor barrier consisting of factory- or field-applied jacket, adhesive, vapor-barrier mastic, and sealant at joints, seams, and protrusions.

    a. Repair punctures, tears, and penetrations with tape or mastic to maintain vapor-barrier seal.
    b. Install vapor stops for ductwork and plenums operating below 50 deg F at 18-foot intervals. Vapor stops shall consist of vapor-barrier mastic applied in a Z-shaped pattern over insulation face, along butt end of insulation, and over the surface. Cover insulation face and surface to be insulated a width equal to two times the insulation thickness, but not less than 3 inches.

5. Overlap unfaced blankets a minimum of 2 inches on longitudinal seams and end joints. At end joints, secure with steel bands spaced a maximum of 18 inches o.c.

6. Install insulation on rectangular duct elbows and transitions with a full insulation section for each surface. Install insulation on round and flat-oval duct elbows with individually mitered gores cut to fit the elbow.
7. Insulate duct stiffeners, hangers, and flanges that protrude beyond insulation surface with 6-inch-wide strips of same material used to insulate duct. Secure on alternating sides of stiffener, hanger, and flange with pins spaced 6 inches o.c.

3.6 FINISHES

A. Insulation with ASJ, Glass-Cloth, or Other Paintable Jacket Material: Paint jacket with paint system identified below.

1. Flat Acrylic Finish: Two finish coats over a primer that is compatible with jacket material and finish coat paint. Add fungicidal agent to render fabric mildew proof.

a. Finish Coat Material: Interior, flat, latex-emulsion size.

B. Flexible Elastomeric Thermal Insulation: After adhesive has fully cured, apply two coats of insulation manufacturer's recommended protective coating.

C. Color: Final color as selected by Owner. Vary first and second coats to allow visual inspection of the completed Work.

D. Do not field paint aluminum or stainless-steel jackets.

3.7 DUCT INSULATION SCHEDULE, GENERAL

A. Plenums and Ducts Requiring Insulation:

1. Indoor, concealed supply and outdoor air.
2. Indoor, exposed supply and outdoor air.
3. Indoor, concealed exhaust between isolation damper and penetration of building exterior.

B. Items Not Insulated:

1. Metal ducts with duct liner of sufficient thickness to comply with energy code and ASHRAE/IESNA 90.1.
2. Factory-insulated flexible ducts.
3. Flexible connectors.
4. Vibration-control devices.

3.8 INDOOR DUCT AND PLENUM INSULATION SCHEDULE

A. Concealed, round and flat-oval, supply-air duct insulation shall be the following:

1. Mineral-Fiber Blanket: 2 inches thick and 1.5-lb/cu. ft. nominal density.

B. Concealed, round and flat-oval, outdoor-air duct insulation shall be the following:

1. Mineral-Fiber Blanket: 2 inches thick and 1.5-lb/cu. ft. nominal density.

C. Concealed, rectangular, exhaust-air duct insulation between isolation damper and penetration of building exterior shall be the following:

1. Mineral-Fiber Blanket: 2 inches thick and 1.5-lb/cu. ft. nominal density.

D. Concealed, supply-air plenum insulation shall be the following:

1. Mineral-Fiber Blanket: 2 inches thick and 0.75-lb/cu. ft. 1.5-lb/cu. ft. nominal density.

E. Concealed, outdoor-air plenum insulation shall be the following:

1. Mineral-Fiber Blanket: 2 inches thick and 1.5-lb/cu. ft. nominal density.

F. Exposed, round and flat-oval, supply-air duct insulation shall be the following:

1. Mineral-Fiber Blanket: 2 inches thick and 1.5-lb/cu. ft. nominal density.

G. Exposed, round and flat-oval, outdoor-air duct insulation shall be the following:

1. Mineral-Fiber Blanket: 2 inches thick and 1.5-lb/cu. ft. nominal density.

H. Exposed, supply-air plenum insulation shall be the following:

1. Mineral-Fiber Blanket: 2 inches thick and 1.5-lb/cu. ft. nominal density.

I. Exposed, outdoor-air plenum insulation shall be the following:

1. Mineral-Fiber Blanket: 2 inches thick and 1.5-lb/cu. ft. nominal density.

END OF SECTION

SECTION 15088

HVAC PIPING INSULATION

PART 1 - GENERAL

1.1 SUMMARY

A. Section includes insulating the following HVAC piping systems:

1. Condensate drain piping, indoors.
2. Condenser-water piping, indoors.

1.2 SUBMITTALS

A. Product Data: For each type of product indicated. Include thermal conductivity, water-vapor permeance thickness, and jackets (both factory and field applied if any).

1.3 QUALITY ASSURANCE

A. Surface-Burning Characteristics: For insulation and related materials, as determined by testing identical products according to ASTM E 84, by a testing and inspecting agency acceptable to authorities having jurisdiction. Factory label insulation and jacket materials and adhesive, mastic, tapes, and cement material containers, with appropriate markings of applicable testing agency.

1. Insulation Installed Indoors: Flame-spread index of 25 or less, and smoke-developed index of 50 or less.

1.4 DELIVERY, STORAGE, AND HANDLING

A. Packaging: Insulation material containers shall be marked by manufacturer with appropriate ASTM standard designation, type and grade, and maximum use temperature.

1.5 COORDINATION

A. Coordinate sizes and locations of supports, hangers, and insulation shields specified in Section 15050 (Basic Mechanical Materials and Methods).

B. Coordinate clearance requirements for piping insulation application. Before preparing piping Shop Drawings, establish and maintain clearance requirements for installation

of insulation and field-applied jackets and finishes and for space required for maintenance.

1.6 SCHEDULING

A. Schedule insulation application after pressure testing systems. Insulation application may begin on segments that have satisfactory test results.

PART 2 - PRODUCTS

2.1 INSULATION MATERIALS

A. Comply with requirements in "Piping Insulation Schedule, General" and "Indoor Piping Insulation Schedule" articles for where insulating materials shall be applied, per paragraph 3.3 in this Section.

B. Products shall not contain asbestos, lead, mercury, or mercury compounds.

C. Foam insulation materials shall not use CFC or HCFC blowing agents in the manufacturing process.

D. Fiberglas Insulation: Pre-formed, factory-applied jacket requirements are specified in "Factory-Applied Jackets" Article.

1. Manufacturers:

a. Johns Mansville; Micro-Lok
b. Knauf Insulation; 1000-Degree Pipe Insulation
c. Owens Corning; Fiberglas Pipe Insulation
d. Or Approved Equal.

2. Special-Shaped Insulation: ASTM C 552, Type III.
3. Preformed Pipe Insulation without Jacket: Comply with ASTM C 552, Type II, Class 1.
4. Preformed Pipe Insulation with Factory-Applied ASJ: Comply with ASTM C 552, Type II, Class 2.
5. Factory fabricate shapes according to ASTM C 450 and ASTM C 585.

E. Flexible Elastomeric Insulation: Closed-cell, sponge- or expanded-rubber materials. Comply with ASTM C 534, Type I for tubular materials.

1. Manufacturers:

a. Aeroflex USA, Inc.; Aerocel.
b. Armacell LLC; AP Armaflex.
c. K-Flex USA; Insul-Lock, Insul-Tube, and K-FLEX LS.

d. Or Approved Equal.

2.2 ADHESIVES

A. Materials shall be compatible with insulation materials, jackets, and substrates and for bonding insulation to itself and to surfaces to be insulated unless otherwise indicated.

B. Adhesives, adhesive bonding primers, adhesive primers, sealants, sealant primers, and caulks shall comply with local or regional air pollution control or air quality management district rules where applicable or SCAQMD rule 1168 VOC limits, as shown in Table 4.504.1 or 4.504.2, as applicable per 2010 CalGreen, Section 5.504.4.1.

C. Cellular-Glass Adhesive: Two-component, thermosetting urethane adhesive containing no flammable solvents, with a service temperature range of minus 100 to plus 200 deg F .

1. For indoor applications, adhesive shall have a VOC content of 50 g/L or less when calculated according to 40 CFR 59, Subpart D (EPA Method 24).

D. Flexible Elastomeric and Polyolefin Adhesive: Comply with MIL-A-24179A, Type II, Class I.

1. For indoor applications, adhesive shall have a VOC content of 50 g/L or less when calculated according to 40 CFR 59, Subpart D (EPA Method 24).

E. ASJ Adhesive, and FSK and PVDC Jacket Adhesive: Comply with MIL-A-3316C, Class 2, Grade A for bonding insulation jacket lap seams and joints.

1. For indoor applications, adhesive shall have a VOC content of 50 g/L or less when calculated according to 40 CFR 59, Subpart D (EPA Method 24).

2.3 MASTICS

A. Materials shall be compatible with insulation materials, jackets, and substrates; comply with MIL-PRF-19565C, Type II.

1. For indoor applications, use mastics that have a VOC content of 50 g/L or less when calculated according to 40 CFR 59, Subpart D (EPA Method 24).

B. Vapor-Barrier Mastic: Water based; suitable for indoor use on below-ambient services.

1. Water-Vapor Permeance: ASTM E 96/E 96M, Procedure B, 0.013 perm at 43-mil dry film thickness.
2. Service Temperature Range: Minus 20 to plus 180 deg F.
3. Solids Content: ASTM D 1644, 58 percent by volume and 70 percent by weight.
4. Color: White.

2.4 FACTORY-APPLIED JACKETS

A. Insulation system schedules indicate factory-applied jackets on various applications. When factory-applied jackets are indicated, comply with the following:

1. ASJ: White, kraft-paper, fiberglass-reinforced scrim with aluminum-foil backing; complying with ASTM C 1136, Type I.
2. ASJ-SSL: ASJ with self-sealing, pressure-sensitive, acrylic-based adhesive covered by a removable protective strip; complying with ASTM C 1136, Type I.

PART 3 - EXECUTION

3.1 EXAMINATION

A. Examine substrates and conditions for compliance with requirements for installation tolerances and other conditions affecting performance of insulation application.

1. Verify that systems to be insulated have been tested and are free of defects.
2. Verify that surfaces to be insulated are clean and dry.
3. Proceed with installation only after unsatisfactory conditions have been corrected.

3.2 PREPARATION

A. Surface Preparation: Clean and dry surfaces to receive insulation. Remove materials that will adversely affect insulation application.

B. Surface Preparation: Clean and prepare surfaces to be insulated. Before insulating, apply a corrosion coating to insulated surfaces as follows:

1. Carbon Steel: Coat carbon steel operating at a service temperature between 32 and 300 deg F with an epoxy coating. Consult coating manufacturer for appropriate coating materials and application methods for operating temperature range.

3.3 GENERAL INSTALLATION REQUIREMENTS

A. Install insulation materials, accessories, and finishes with smooth, straight, and even surfaces; free of voids throughout the length of piping including fittings, valves, and specialties.

B. Install insulation materials, forms, vapor barriers or retarders, jackets, and thicknesses required for each item of pipe system as specified in insulation system schedules.

C. Install accessories compatible with insulation materials and suitable for the service. Install accessories that do not corrode, soften, or otherwise attack insulation or jacket in either wet or dry state.

D. Install insulation with longitudinal seams at top and bottom of horizontal runs.

E. Install multiple layers of insulation with longitudinal and end seams staggered.

F. Do not weld brackets, clips, or other attachment devices to piping, fittings, and specialties.

G. Keep insulation materials dry during application and finishing.

H. Install insulation with tight longitudinal seams and end joints. Bond seams and joints with adhesive recommended by insulation material manufacturer.

I. Install insulation with least number of joints practical.

J. Where vapor barrier is indicated, seal joints, seams, and penetrations in insulation at hangers, supports, anchors, and other projections with vapor-barrier mastic.

1. Install insulation continuously through hangers and around anchor attachments.
2. For insulation application where vapor barriers are indicated, extend insulation on anchor legs from point of attachment to supported item to point of attachment to structure. Taper and seal ends at attachment to structure with vapor-barrier mastic.
3. Install insert materials and install insulation to tightly join the insert. Seal insulation to insulation inserts with adhesive or sealing compound recommended by insulation material manufacturer.
4. Cover inserts with jacket material matching adjacent pipe insulation. Install shields over jacket, arranged to protect jacket from tear or puncture by hanger, support, and shield.

K. Apply adhesives, mastics, and sealants at manufacturer's recommended coverage rate and wet and dry film thicknesses.

L. Install insulation with factory-applied jackets as follows:

1. Draw jacket tight and smooth.
2. Cover circumferential joints with 3-inch wide strips, of same material as insulation jacket. Secure strips with adhesive and outward clinching staples along both edges of strip, spaced 4 inches o.c.
3. Overlap jacket longitudinal seams at least 1-1/2 inches. Install insulation with longitudinal seams at bottom of pipe. Clean and dry surface to receive self-sealing lap. Staple laps with outward clinching staples along edge at 2 inches o.c.

    a. For below-ambient services, apply vapor-barrier mastic over staples.

4. Cover joints and seams with tape, according to insulation material manufacturer's written instructions, to maintain vapor seal.
5. Where vapor barriers are indicated, apply vapor-barrier mastic on seams and joints and at ends adjacent to pipe flanges and fittings.

M. Cut insulation in a manner to avoid compressing insulation more than 75 percent of its nominal thickness.

N. Finish installation with systems at operating conditions. Repair joint separations and cracking due to thermal movement.

O. Repair damaged insulation facings by applying same facing material over damaged areas. Extend patches at least 4 inches beyond damaged areas. Adhere, staple, and seal patches similar to butt joints.

P. For above-ambient services, do not install insulation to the following:

1. Vibration-control devices.
2. Testing agency labels and stamps.
3. Nameplates and data plates.

3.4 PENETRATIONS

A. Insulation Installation at Roof Penetrations: Install insulation continuously through roof penetrations.

1. Seal penetrations with flashing sealant.
2. For applications requiring only indoor insulation, terminate insulation above roof surface and seal with joint sealant. For applications requiring indoor and outdoor insulation, install insulation for outdoor applications tightly joined to indoor insulation ends. Seal joint with joint sealant.
3. Extend jacket of outdoor insulation outside roof flashing at least 2 inches below top of roof flashing.
4. Seal jacket to roof flashing with flashing sealant.

B. Insulation Installation at Underground Exterior Wall Penetrations: Terminate insulation flush with sleeve seal. Seal terminations with flashing sealant.

C. Insulation Installation at Aboveground Exterior Wall Penetrations: Install insulation continuously through wall penetrations.

1. Seal penetrations with flashing sealant.
2. For applications requiring only indoor insulation, terminate insulation inside wall surface and seal with joint sealant. For applications requiring indoor and outdoor insulation, install insulation for outdoor applications tightly joined to indoor insulation ends. Seal joint with joint sealant.

3. Extend jacket of outdoor insulation outside wall flashing and overlap wall flashing at least 2 inches.
4. Seal jacket to wall flashing with flashing sealant.

D. Insulation Installation at Interior Wall and Partition Penetrations (That Are Not Fire Rated): Install insulation continuously through walls and partitions.

E. Insulation Installation at Fire-Rated Wall and Partition Penetrations: Install insulation continuously through penetrations of fire-rated walls and partitions.

F. Insulation Installation at Floor Penetrations:

1. Pipe: Install insulation continuously through floor penetrations.
2. Seal penetrations through fire-rated assemblies.

3.5 GENERAL PIPE INSULATION INSTALLATION

A. Requirements in this article generally apply to all insulation materials except where more specific requirements are specified in various pipe insulation material installation articles.

B. Insulation Installation on Fittings, Valves, Strainers, Flanges, and Unions:

1. Install insulation over fittings, valves, strainers, flanges, unions, and other specialties with continuous thermal and vapor-retarder integrity unless otherwise indicated.
2. Insulate pipe elbows using preformed fitting insulation or mitered fittings made from same material and density as adjacent pipe insulation. Each piece shall be butted tightly against adjoining piece and bonded with adhesive. Fill joints, seams, voids, and irregular surfaces with insulating cement finished to a smooth, hard, and uniform contour that is uniform with adjoining pipe insulation.
3. Insulate tee fittings with preformed fitting insulation or sectional pipe insulation of same material and thickness as used for adjacent pipe. Cut sectional pipe insulation to fit. Butt each section closely to the next and hold in place with tie wire. Bond pieces with adhesive.
4. Insulate valves using preformed fitting insulation or sectional pipe insulation of same material, density, and thickness as used for adjacent pipe. Overlap adjoining pipe insulation by not less than two times the thickness of pipe insulation, or one pipe diameter, whichever is thicker. For valves, insulate up to and including the bonnets, valve stuffing-box studs, bolts, and nuts. Fill joints, seams, and irregular surfaces with insulating cement.
5. Insulate strainers using preformed fitting insulation or sectional pipe insulation of same material, density, and thickness as used for adjacent pipe. Overlap adjoining pipe insulation by not less than two times the thickness of pipe insulation, or one pipe diameter, whichever is thicker. Fill joints, seams, and irregular surfaces with insulating cement. Insulate strainers so strainer basket flange or plug can be easily removed and replaced without damaging the

insulation and jacket. Provide a removable reusable insulation cover. For below-ambient services, provide a design that maintains vapor barrier.

6. Insulate flanges and unions using a section of oversized preformed pipe insulation. Overlap adjoining pipe insulation by not less than two times the thickness of pipe insulation, or one pipe diameter, whichever is thicker.
7. Cover segmented insulated surfaces with a layer of finishing cement and coat with a mastic. Install vapor-barrier mastic for below-ambient services and a breather mastic for above-ambient services. Reinforce the mastic with fabric-reinforcing mesh. Trowel the mastic to a smooth and well-shaped contour.
8. For services not specified to receive a field-applied jacket except for flexible elastomeric and polyolefin, install fitted PVC cover over elbows, tees, strainers, valves, flanges, and unions. Terminate ends with PVC end caps. Tape PVC covers to adjoining insulation facing using PVC tape.
9. Stencil or label the outside insulation jacket of each union with the word "union." Match size and color of pipe labels.

C. Insulate instrument connections for thermometers, pressure gages, pressure temperature taps, test connections, flow meters, sensors, switches, and transmitters on insulated pipes. Shape insulation at these connections by tapering it to and around the connection with insulating cement and finish with finishing cement, mastic, and flashing sealant.

D. Install removable insulation covers at locations indicated. Installation shall conform to the following:

1. Make removable flange and union insulation from sectional pipe insulation of same thickness as that on adjoining pipe. Install same insulation jacket as adjoining pipe insulation.
2. When flange and union covers are made from sectional pipe insulation, extend insulation from flanges or union long at least two times the insulation thickness over adjacent pipe insulation on each side of flange or union. Secure flange cover in place with stainless-steel or aluminum bands. Select band material compatible with insulation and jacket.
3. Construct removable valve insulation covers in same manner as for flanges, except divide the two-part section on the vertical center line of valve body.
4. When covers are made from block insulation, make two halves, each consisting of mitered blocks wired to stainless-steel fabric. Secure this wire frame, with its attached insulation, to flanges with tie wire. Extend insulation at least 2 inches (50 mm) over adjacent pipe insulation on each side of valve. Fill space between flange or union cover and pipe insulation with insulating cement. Finish cover assembly with insulating cement applied in two coats. After first coat is dry, apply and trowel second coat to a smooth finish.
5. Unless a PVC jacket is indicated in field-applied jacket schedules, finish exposed surfaces with a metal jacket.

3.6 INSTALLATION OF CELLULAR-GLASS INSULATION

A. Insulation Installation on Straight Pipes and Tubes:

1. Secure each layer of insulation to pipe with wire or bands and tighten bands without deforming insulation materials.
2. Where vapor barriers are indicated, seal longitudinal seams, end joints, and protrusions with vapor-barrier mastic and joint sealant.
3. For insulation with factory-applied jackets on above-ambient services, secure laps with outward-clinched staples at 6 inches o.c.
4. For insulation with factory-applied jackets on below-ambient services, do not staple longitudinal tabs. Instead, secure tabs with additional adhesive as recommended by insulation material manufacturer and seal with vapor-barrier mastic and flashing sealant.

B. Insulation Installation on Pipe Flanges:

1. Install preformed pipe insulation to outer diameter of pipe flange.
2. Make width of insulation section same as overall width of flange and bolts, plus twice the thickness of pipe insulation.
3. Fill voids between inner circumference of flange insulation and outer circumference of adjacent straight pipe segments with cut sections of cellular-glass block insulation of same thickness as pipe insulation.
4. Install jacket material with manufacturer's recommended adhesive, overlap seams at least 1 inch, and seal joints with flashing sealant.

C. Insulation Installation on Pipe Fittings and Elbows:

1. Install preformed sections of same material as straight segments of pipe insulation when available. Secure according to manufacturer's written instructions.
2. When preformed sections of insulation are not available, install mitered sections of cellular-glass insulation. Secure insulation materials with wire or bands.

D. Insulation Installation on Valves and Pipe Specialties:

1. Install preformed sections of cellular-glass insulation to valve body.
2. Arrange insulation to permit access to packing and to allow valve operation without disturbing insulation.
3. Install insulation to flanges as specified for flange insulation application.

3.7 INSTALLATION OF FLEXIBLE ELASTOMERIC INSULATION

A. Seal longitudinal seams and end joints with manufacturer's recommended adhesive to eliminate openings in insulation that allow passage of air to surface being insulated.

B. Insulation Installation on Pipe Flanges:

1. Install pipe insulation to outer diameter of pipe flange.
2. Make width of insulation section same as overall width of flange and bolts, plus twice the thickness of pipe insulation.
3. Fill voids between inner circumference of flange insulation and outer circumference of adjacent straight pipe segments with cut sections of sheet insulation of same thickness as pipe insulation.
4. Secure insulation to flanges and seal seams with manufacturer's recommended adhesive to eliminate openings in insulation that allow passage of air to surface being insulated.

C. Insulation Installation on Pipe Fittings and Elbows:

1. Install mitered sections of pipe insulation.
2. Secure insulation materials and seal seams with manufacturer's recommended adhesive to eliminate openings in insulation that allow passage of air to surface being insulated.

D. Insulation Installation on Valves and Pipe Specialties:

1. Install preformed valve covers manufactured of same material as pipe insulation when available.
2. When preformed valve covers are not available, install cut sections of pipe and sheet insulation to valve body. Arrange insulation to permit access to packing and to allow valve operation without disturbing insulation.
3. Install insulation to flanges as specified for flange insulation application.
4. Secure insulation to valves and specialties and seal seams with manufacturer's recommended adhesive to eliminate openings in insulation that allow passage of air to surface being insulated.

3.8 FIELD-APPLIED JACKET INSTALLATION

A. Where glass-cloth jackets are indicated, install directly over bare insulation or insulation with factory-applied jackets.

1. Draw jacket smooth and tight to surface with 2-inch overlap at seams and joints.
2. Embed glass cloth between two 0.062-inch-thick coats of lagging adhesive.
3. Completely encapsulate insulation with coating, leaving no exposed insulation.

B. Where FSK jackets are indicated, install as follows:

1. Draw jacket material smooth and tight.
2. Install lap or joint strips with same material as jacket.
3. Secure jacket to insulation with manufacturer's recommended adhesive.
4. Install jacket with 1-1/2-inch laps at longitudinal seams and 3-inch-wide joint strips at end joints.
5. Seal openings, punctures, and breaks in vapor-retarder jackets and exposed insulation with vapor-barrier mastic.

C. Where PVC jackets are indicated, install with 1-inch overlap at longitudinal seams and end joints; for horizontal applications. Seal with manufacturer's recommended adhesive.

1. Apply two continuous beads of adhesive to seams and joints, one bead under lap and the finish bead along seam and joint edge.

D. Where metal jackets are indicated, install with 2-inch overlap at longitudinal seams and end joints. Overlap longitudinal seams arranged to shed water. Seal end joints with weatherproof sealant recommended by insulation manufacturer. Secure jacket with stainless-steel bands 12 inches o.c. and at end joints.

E. Where PVDC jackets are indicated, install as follows:

1. Apply three separate wraps of filament tape per insulation section to secure pipe insulation to pipe prior to installation of PVDC jacket.
2. Wrap factory-presized jackets around individual pipe insulation sections with one end overlapping the previously installed sheet. Install presized jacket with an approximate overlap at butt joint of 2 inches over the previous section. Adhere lap seal using adhesive or SSL, and then apply 1-1/4 circumferences of appropriate PVDC tape around overlapped butt joint.
3. Continuous jacket can be spiral-wrapped around a length of pipe insulation. Apply adhesive or PVDC tape at overlapped spiral edge. When electing to use adhesives, refer to manufacturer's written instructions for application of adhesives along this spiral edge to maintain a permanent bond.
4. Jacket can be wrapped in cigarette fashion along length of roll for insulation systems with an outer circumference of 33-1/2 inches or less. The 33-1/2-inch-circumference limit allows for 2-inch-overlap seal. Using the length of roll allows for longer sections of jacket to be installed at one time. Use adhesive on the lap seal. Visually inspect lap seal for "fishmouthing," and use PVDC tape along lap seal to secure joint.
5. Repair holes or tears in PVDC jacket by placing PVDC tape over the hole or tear and wrapping a minimum of 1-1/4 circumferences to avoid damage to tape edges.

3.9 FINISHES

A. Pipe Insulation with ASJ, Glass-Cloth, or Other Paintable Jacket Material: Paint jacket with paint system identified below.

1. Flat Acrylic Finish: Two finish coats over a primer that is compatible with jacket material and finish coat paint. Add fungicidal agent to render fabric mildew proof.

a. Finish Coat Material: Interior, flat, latex-emulsion size.

B. Color: Final color as selected by Architect. Vary first and second coats to allow visual inspection of the completed Work.

3.10 FIELD QUALITY CONTROL

A. Testing Agency: Owner will engage a qualified testing agency to perform tests and inspections.

B. Tests and Inspections:

1. Inspect pipe, fittings, strainers, and valves, randomly selected by Architect, by removing field-applied jacket and insulation in layers in reverse order of their installation. Extent of inspection shall be limited to three locations of straight pipe, three locations of threaded fittings, three locations of welded fittings, two locations of threaded strainers, two locations of welded strainers, three locations of threaded valves, and three locations of flanged valves for each pipe service defined in the "Piping Insulation Schedule, General" Article.

C. All insulation applications will be considered defective Work if sample inspection reveals noncompliance with requirements.

3.11 PIPING INSULATION SCHEDULE, GENERAL

A. Acceptable preformed pipe and tubular insulation materials and thicknesses are identified for each piping system and pipe size range. If more than one material is listed for a piping system, selection from materials listed is Contractor's option.

B. Items Not Insulated: Unless otherwise indicated, do not install insulation on the following:

1. Underground piping.

3.12 INDOOR PIPING INSULATION SCHEDULE

A. Condensate and Equipment Drain Water below 60 Deg F:

1. All Pipe Sizes: Insulation shall be one of the following:

a. Cellular Glass: 1-1/2 inches thick.
b. Flexible Elastomeric: 1 inch thick.

B. Condenser-Water Supply and Return:

1. NPS 12 and Smaller: Insulation shall be the following:

a. Cellular Glass: 1-1/2 inches thick.

3.13 INDOOR, FIELD-APPLIED JACKET SCHEDULE

A. Install jacket over insulation material. For insulation with factory-applied jacket, install the field-applied jacket over the factory-applied jacket.

B. If more than one material is listed, selection from materials listed is Contractor's option.

C. Piping, Concealed:

1. PVC, Color-Coded by System: 20 mils thick.

D. Piping, Exposed:

1. PVC, Color-Coded by System: 20 mils thick.

END OF SECTION

SECTION 15181

HYDRONIC PIPING AND SPECIALTIES

PART 1 GENERAL

1.1 SUMMARY

A. Section Includes:

1. Condenser water piping.
2. Condensate drain piping.
3. Air vent piping.
4. Valves
5. Strainers
6. Pipe Identification

B. Related Sections

1. Section 15050 (Basic Mechanical Materials and Methods)

1.2 REFERENCES

A. ANSI Standards (Piping and Flanges)

B. ANSI B40.1 – Gauges – Pressure Indicating Dial Type

C. ASME B 16.1 – Gray Iron Pipe Flanges and Fittings

D. ASME B16.3 – Malleable Iron Threaded Fittings: Classes 150 and 300

E. ASME B16.4 – Gray Iron Threaded Fittings: Classes 125 and 250

F. ASME B16.22- Wrought Copper and Copper Alloy Solder-Joint Pressure Fittings

G. ASME B16.39 – Malleable Iron Threaded Pipe Unions Classes 150, 250 and 300

H. ASME B18.2.1 – Square, Hex, Heavy Hex, and Askew Head Bolts and Hex, Heavy Hex, Hex Flange, Lobed Head, and Lag Screws (Inch Series)

I. ASME B31.9 – Building Services Piping

J. ASME Boiler and Pressure Vessel Code

K. ASTM A47 – Standard Specifications for Ferritic Malleable Iron Castings

L. ASTM A53 – Standard Specification for Pipe, Steel, Black, and Hot-Dipped, Welded and Seamless

M. ASTM A106 – Standard Specification for Seamless Copper Steel Pipe for High Temperature Service

N. ASTM A126 – Standard Specification for Gray Iron Castings for Valves, Flanges and Pipe Fittings.

O. ASTM A234 – Standard Specification for Piping Fittings of Wrought Carbon Steel and Alloy Steel for Moderate and High Temperature Service.

P. ASTM A536 – Standard Specification for Ductile Iron Castings

Q. ASTM A733 – Standard Specification for Welded and Seamless Carbon Steel and Austenitic Stainless Steel Pipe Nipples

R. ASTM B32 – Standard Specification for Solder Metal

S. ASTM B88 – Standard Specification for Seamless Copper Water Tube

T. ASTM B306 – Standard Specification for Copper Drainage Tube (DWV)

U. ASTM B813 – Standard Specification for Liquid and Paste Fluxes for Soldering for Copper and Copper Alloy Tube

V. AWWA C906 – Standard for Polyethylene (PE) Pressure Pipe and Fittings, 4 inches (100mmm) through 63 inches (1600 mm) for Water Distribution and Transmission

W. AWS A5.8 – Specification for Filler Metals for Brazing and Braze Welding

X. California Mechanical Code (CMC) 310.1

1.3 SUBMITTALS

A. Product Data:

1. Piping Materials.
2. Valves. Include flow and pressure drop curves based on manufacturer's testing for calibrated-orifice balancing valves and automatic flow-control valves.
3. Air control devices.
4. Hydronic specialties.

B. Qualification Data: For pipe installers.

C. Installation, Operation, and Maintenance Manuals:

1. Hydronic Piping and Specialties
2. Special-duty valves

1.5 QUALITY ASSURANCE

A. Steel Support Welding: Qualify processes and operators according to AWS D1.1/D1.1M, "Structural Welding Code – Steel."

B. ASME Compliance: Comply with ASME B31.9, "Building Services Piping," for materials, products, and installation. Safety valves and pressure vessels shall bear the appropriate

ASME label. Fabricate and stamp air separators and expansion tanks to comply with ASME Boiler and Pressure Vessel Code: Section VIII, Division I.

C. Identification: Provide piping specialties with manufacturer's name or trademark and pressure rating clearly on valve body.

D. Field Reports

1. Hydrostatic system pressure tests.
2. System start-up test.

E. Qualification Data: For pipe installers.

1. HDPE pipe manufacturer's fusing certificates, if required.
2. Welding certificates.

PART 2 PRODUCTS

2.1 MANUFACTURERS

A. Grooved Mechanical-Joint Fittings and Couplings:

1. Victaulic Company.
2. Anvil International, Inc.
3. S. P. Fittings; a division of Star Pipe Products.
4. Or Approved Equal

B. Steel Pressure-Seal Fittings:

1. Victaulic Company.
2. Or Approved Equal

C. Wrought-Copper Fittings: ASME B16.22.

1. Anvil International, Inc.
2. S.P. Fittings: a division of Star Pipe Products.
3. Victaulic Company of America.
4. Or Approved Equal

D. Expansion Joints

1. Victaulic Company
2. Flexicraft Industries
3. Proco Products, Inc.
4. Or Approved Equal

F. Dielectric Unions:

1. Central Plastics Co.
2. Watts Industries, Inc.; Water Products Div.
3. Zurn Industries, Inc.; Wilkins Div.

4. Or Approved Equal

G. Dielectric Flanges:

1. Capitol Manufacturing Co.
2. Central Plastics Co.
3. Watts Industries, Inc.; Water Products Div.
4. Or Approved Equal

H. Dielectric-Flange Kits:

1. Advance Products & Systems, Inc.
2. Calpico, Inc.
3. Central Plastics Co.
4. Or Approved Equal

I. Dielectric Couplings:

1. Calpico, Inc.
2. Lochinvar Corp.
3. Or Approved Equal

J. Dielectric Nipples:

1. Precision Plumbing Products, Inc.
2. Sioux Chief Manufacturing Co., Inc.
3. Victaulic Co. of America
4. Or Approved Equal

K. Bronze, Calibrated-Orifice, Balancing Valves:

1. Bell & Gossett
2. Griswold Controls
3. Taco
4. Or Approved Equal

L. Temperature Gauges

1. Ashcroft
2. Weiss
3. Watts
4. Or Approved Equal

M. Pressure Gauges

1. Ashcroft
2. Weiss
3. Watts
4. Or Approved Equal.

N. Air control Devices:

1. Amtrol, Inc.
2. Bell & Gossett

3. Taco
4. Or Approved Equal

O. Air/Dirt Separator:

1. Spirotherm, Inc.
2. Wessels Company
3. Or Approved Equal

P. Y-Pattern Strainers

1. Bell & Gossett
2. Zurn
3. Or Approved Equal

2.2 PERFORMANCE REQUIREMENTS

A. Hydronic piping components and installation shall be capable of withstanding the following minimum working pressure and temperature:

1. Condenser Water Piping: 125 psi at 150 deg F.
2. Condensate Drain Piping: 150 deg F.
3. Air Vent Piping: 200 deg F.

2.3 PIPING APPLICATIONS

A. Condenser-water piping, aboveground, shall be:

1. Steel Pipe: ASTM A 53/A 53M, black steel.

B. Condenser-water piping, belowground, shall be:

1. High density polyethylene pipe (HPDE) PE3408, with heat fused butt or socket fittings.

C. Condensate Drain Piping:

1. Type L, drawn-temper copper tubing, wrought-copper fittings, and soldered joints.

D. Air-vent Piping:

1. Inlet: Same as service where installed according to the piping manufacturer's written instructions.
2. Outlet: Annealed-temper copper tubing with soldered or flared joints.

2.4 STEEL PIPE AND FITTINGS

A. Steel Pipe: ASTM A 53/A 53M, black steel; type, grade, and Schedule 40 wall thickness.

B. Cast-Iron Threaded Fittings: ASME B16.4; Classes 125 and 250.

C. Malleable-Iron Threaded Fittings: ASME B16.3, Classes 150 and 300.

D. Malleable-Iron Unions: ASME B16.39; Classes 150, 250, and 300.

E. Cast-Iron Pipe Flanges and Flanged Fittings: ASME B16.1, Classes 25, 125, and 250; raised ground face, and bolt holes spot faced.

F. Wrought-Steel Fittings: ASTM A 234/A 234M, wall thickness to match adjoining pipe.

G. Wrought Cast- and Forged-Steel Flanges and Flanged Fittings: ASME B16.5, including bolts, nuts, and gaskets of the following material group, end connections, and facings:

1. Material Group: 1.1.
2. End Connections: Butt welding.
3. Facings: Raised face.

H. Grooved Mechanical-Joint Fittings and Couplings:

1. Joint Fittings: ASTM A 536, Grade 65-45-12 ductile iron; ASTM A 47/A 47M, Grade 32510 malleable iron; ASTM A 53/A 53M, Type F, E, or S, Grade B fabricated steel; or ASTM A 106, Grade B steel fittings with grooves or shoulders constructed to accept grooved-end couplings; with nuts, bolts, locking pin, locking toggle, or lugs to secure grooved pipe and fittings.
2. Couplings: Ductile- or malleable-iron housing and synthetic rubber gasket of central cavity pressure-responsive design; with nuts, bolts, locking pin, locking toggle, or lugs to secure grooved pipe and fittings.
3. Subject to approval by local code.

I. Steel Pressure-Seal Fittings:

1. Housing: Steel.
2. O-Rings and Pipe Stop: Ethylene Propylene Diene M-class rubber (EPDM)
3. Tools: Manufacturer's special tool.
4. Minimum 300-psig working-pressure rating at 230 deg F.

J. Steel Pipe Nipples: ASTM A 733, made of same materials and wall thicknesses as pipe in which they are installed.

2.5 COPPER TUBE AND FITTINGS

A. Drawn-Temper Copper Tubing: ASTM B 88.

B. Annealed-Temper Copper Tubing: ASTM B 88.

C. Drain, Waste, and Vent (DWV) Copper Tubing: ASTM B306, Type DWV.

D. Wrought-Copper Fittings: ASME B16.22.

E. Wrought-Copper Unions: ASME B16.22

2.6 HDPE PIPE AND FITTINGS

A. All underground piping shall be high density polyethylene (HDPE), PE3408.

1. Pipe with diameters of 2″ or less shall be DR 11.
2. Pipe with diameters of 3 inches or larger shall be DR 17.

B. HDPE shall not be used within the building.

2.7 JOINING MATERIALS

A. Expansion Joints: As required for pipe diameter of 2″ or greater, use one type:

1. Slip-Type:

   a. Pressure Rating: 350 psi
   b. Temperature Rating: 230 deg F
   c. Total Movement: 3″
   d. Weight: 75 lbs
   e. Housing: ASTM A-536 ductile iron.
   f. Body, End: ASTM A-53 Schedule 40 carbon steel.
   g. Slide: AISI 1015 or 1018 Schedule 40, cold drawn.
   h. Gasket: Grade "E" EPDM.
   i. Connection Type: Grooved Coupling

2. Flexible Rubber Spool Type:

   a. Pressure Rating: 190 psi.
   b. Compressive Movement: 1.4″
   c. Expansion Movement: 0.7″
   d. Weight: 20.5 lbs
   e. Expansion Medium: Arched rubber joint.
   f. Tube and cover: Butyl of other elastomer, suitable for system service, and multiple plies of polyester or nylon cord.
   g. Connection Type: Full face flanges and retaining rings drilled to 150# ANSI B16.5 standard.

B. Pipe-Flange Gasket Materials: Suitable for chemical and thermal conditions of piping system components.

1. ASME B16.21, nonmetallic, flat, asbestos-free, 1/8-inch maximum thickness unless thickness or specific material is indicated.

   a. Full-Face Type: For flat face, Class 125 cast-iron and cast-bronze flanges.
   b. Narrow-Face Type: For raised face, Class 250, cast-iron and steel flanges.

C. Flange Bolts and Nuts: ASME B18.2.1, carbon steel, unless otherwise indicated.

D. Solder Filler Metals: ASTM B32, lead-free alloys. Include water-flushable flux according to ASTM B 813.

E. Brazing Filler Materials: AWS A5.8, Copper-phosphorous Brazing Alloys, BCuP Series, unless otherwise indicated.

F. Gasket Material: Thickness, material, and type suitable for fluid to be handled and working temperatures and pressures.

2.8 DIELECTRIC FITTINGS

A. Description: Combination fitting of copper alloy and ferrous materials with threaded, solder-joint, plain, or weld-neck end connections that match piping system materials.

B. Insulating Material: Suitable for system fluid, pressure, and temperature.

C. Dielectric Unions:

1. Factory-fabricated union assembly, for 250 psi at minimum working pressure at 200 deg F as required to suit system pressures.

D. Dielectric Flanges:

1. Factory-fabricated companion flange assembly, for 150 psi or 300 psi minimum working pressure as required to suit system pressures.

E. Dielectric-Flange Kits:

1. Companion-flange assembly for field assembly. Include flanges, full-face- or ring-type neoprene or phenolic gasket, phenolic or polyethylene bolt sleeves, phenolic washers, and steel backing washers.

2. Separate companion flanges and steel bolts and nuts shall have 150 psi or 300 psi minimum working pressure where required to suit system pressures.

F. Dielectric Couplings:

1. Galvanized-steel coupling with inert and noncorrosive, thermoplastic lining; threaded ends; and 300 psi minimum working pressures at 225 deg F.

G. Dielectric Nipples:

1. Electroplated steel nipple with inert and noncorrosive, thermoplastic lining; plain, threaded, or grooved ends; and 300 psi minimum working pressure at 225 deg F.

2.9 VALVES

A. Provide Valves with ANSI/ASME Class 125 service rating, which for 150 degrees F, the pressure rating is 175 psig.

B. Plug Valve: Plug valves 2-1/2 inches and larger shall conform to MSS SP-78, have flanged or threaded ends, and have cast iron bodies with bronze trim. Valves 2 inches and smaller shall be bronze with NPT connections for black steel pipe and brazed connections for copper tubing. Valve shall be lubricated, non-lubricated, or tetrafluoroethylene resin coated type. Valve shall be resilient, double seated, trunnion mounted with tapered lift plug capable of 2-way shutoff. Valve shall operate from fully open to fully closed by rotation of the handwheel to lift and turn the plug.

C. Ball Valve: Full port design. Ball valves ½ inch and larger shall conform to MSS SP-72 or MSS SP-110 and shall be bronze with threaded, soldered, or flanged ends. Ball valves may be used in lieu of gate valves.

D. Butterfly Valve: Conform to MSS SP-67, Type 1 and shall be either the wafer or lug type. Valves smaller than 8 inches shall have throttling handles with a minimum of seven locking positions.

E. Bronze, Calibrated-Orifice, Balancing Valves:

1. Body: Bronze, ball or plug type with calibrated orifice or venturi.
2. Ball: Brass or stainless steel.
3. Plug: Resin.
4. Seat: Polytetrafluoroethylene (PTFE).
5. End connections: Threaded or socket.
6. Pressure Gage Connections: Integral seals for portable differential pressure meter.
7. Cold Water Pressure Rating: Minimum 125 psi.
8. Maximum Operating Temperature: 250 deg F.
9. Connecting Bolts and Nuts: Carbon steel with corrosion-resistant coating of length required to secure pressure plates to sealing elements. Include one for each sealing element.

2.10 AIR CONTROL DEVICES

A. Manual Air Vents:

1. Body: Bronze.
2. Internal Parts: Nonferrous.
3. Operator: Screwdriver or thumbscrew.
4. Inlet Connection: ¾ inch
5. Discharge Connection: 1/4 inch
6. Cold Water Pressure Rating: 150 psi.
7. Maximum Operating Temperature: 225 deg F.

B. Automatic Air Vents:

1. Body: Bronze.
2. Internal Parts: Nonferrous.
3. Operator: Screwdriver or thumbscrew.
4. Inlet Connection: ¾ inch
5. Discharge Connection: 1/4 inch
6. Cold Water Pressure Rating: 150 psi.
7. Maximum Operating Temperature: 225 deg F.

2.11 HYDRONIC SPECIALTIES

A. Y-Pattern Strainers

1. Body: ASTM A 126, Class B, cast iron with bolted cover and bottom drain connection.
2. End Connections: Threaded ends for 2 inches and smaller; flanged ends for 2-1/2 inches and larger.
3. Strainer screen: 40 mesh startup strainer and perforated stainless-steel basket with 50 percent free area.
4. Cold Water Pressure Rating: 150 psi.

PART 3 EXECUTION

3.1 VALVE APPLICATIONS

A. Install shutoff duty valves at each building where recycled water enters the building and branches off to heat pump service.

B. Install shutoff duty valves at each branch connection to supply mains and at supply connection to each piece of equipment.

C. Install throttling duty valves at each branch connection to return main.

D. Install calibrated-orifice, balancing valves in the return pipe of each heat pump.

E. Install check valves as required to control flow direction.

3.2 PIPING INSTALLATIONS

A. Install piping in concealed locations, unless otherwise indicated and except in equipment rooms and service areas.

B. Install piping indicated to be exposed and piping in equipment rooms and service areas at right angles or parallel to building walls. Diagonal runs are prohibited unless specifically indicated otherwise.

C. Install piping above accessible ceilings to allow sufficient space for ceiling panel removal.

D. Install piping to permit valve servicing.

E. Install piping at indicated slopes.

F. Install piping free of sags and bends.

G. Install fittings for changes in direction and branch connections.

H. Install piping to allow application of insulation.

I. Select system components with pressure rating equal to or greater than system operating pressure.

J. Install groups of pipes parallel to each other, spaced to permit applying insulation and servicing of valves.

K. Install drains, consisting of a tee fitting, ¾ inch ball valve, and short ¾ inch threaded nipple with cap, at low points in piping system mains and elsewhere as required for system drainage.

L. Install piping at a uniform grade of one percent downward in direction of flow.

M. Reduce pipe sizes using eccentric reducer fitting installed with level side up.

N. Install branch connections to mains using mechanically formed tee fittings in main pipe, with the branch connected to the bottom of the main pipe. For up-fee risers, connect the branch to the top of the main.

O. In piping 2 inches and smaller, install unions adjacent to valves, at final connections of equipment, and elsewhere as indicated.

P. In piping 2-1/2 inches and larger, install flanges at final connections of equipment and elsewhere as indicated.

Q. Install strainers on inlet side of each control valve, pressure reducing valve, solenoid valve, in-line pump, and elsewhere as indicated. Install ¾ inch nipple and ball valve in lowdown connection of strainers 2 inches and larger. Match size of strainer blow off connection for strainers smaller than 2 inches.

R. Install expansion loops, expansion joints, anchors, and pipe alignment guides as required.

S. Condensate drains:

1. Provide on all equipment as indicated.
2. Slope shall be one percent downward.
3. Run from Heat Pump to condensate drain termination shall 100′ maximum.
4. Condensate drains sizes:

   a. 3/4 inch minimum serving up to 20 tons of cooling

5. Termination of condensate drains shall not be over a public walkway per CMC 310.1.

3.3 PIPE JOINT CONSTRUCTION

A. No welding shall be performed inside the building.

1. All welding activities shall be performed outside.
2. Provide adequate welding ventilation and screening per all governing codes.

B. All pipe connections made inside the building shall be coupling, flange, or thread.

C. Ream ends of pipes and tubes and remove burrs. Bevel plain ends of steel pipe.

D. Remove scale, slag, dirt and debris from inside and outside of pipe and fittings before assembly.

E. Soldered Joints: Apply ASTM B 813, water-flushable flux, unless otherwise indicated to tube end. Construct joints according to ASTM B 828 or CDA's "Copper Tube Handbook," using lead-free solder alloy complying with ASTM B32.

F. Brazed Joints: Construct joints according to AWS's "Brazing Handbook," "Pipe and Tube" Chapter using copper-phosphorus brazing filler metal complying with AWS A5.8.

G. Threaded joints: thread pipe with tapered pie threads according to ASME B1.20.1. Cut threads full and clean using sharp dies. Ream threaded pipe ends to remove burrs and restore full ID. Join pipe fittings an valves as follows:

1. Apply appropriate tape or thread compound to external pipe threads unless dry seal threading is specified.
2. Damaged Threads: Do not use pipe or pipe fittings with threads that are corroded or damaged. Do not use pipe section that have cracked or open welds.

H. Welded Joints: Construction joints according to AWS D10.12, using qualified processes and welding operators according to Part 1,"Quality Assurance" Article.

I. Flanged Joints: Select appropriate gasket material, size, type, and thickness for service application. Install gasket concentrically positioned. Use suitable lubricants on bolt threads.

J. PE Piping Heat-Fusion Joints: Clean and dry joining surfaces by wiping with clean cloth or paper towels. Join according to ASTM D 2657.

1. Plain-End Pipe and Fittings: Use butt fusion.
2. Plain-End Pipe and Socket Fittings: Use socket fusion.

K. Mechanical Grooved Joints:

1. Cut or roll grooved. Grooves shall be in accordance with latest manufacturer's published recommendations.
2. All components of the mechanical grooved piping system shall be in accordance with the manufacturer's latest specifications for temperature, pressure, and suitability.
3. Manufacturer to provide instruction manuals and assist the Contractor in training assembly personnel.
4. Use only grooving tools specifically designed for this system.

3.4 HYDRONIC SPECIALTIES INSTALLATION

A. Install automatic air vents at high points in piping, at heat transfer coils, and elsewhere as required for system air venting.

B. Install blowdown piping with gate or full-port ball valve; extend full size to nearest floor drain.

3.5 HEAT PUMP EQUIPMENT CONNECTIONS

A. Sizes for supply and return piping connections shall be the same as or larger than equipment connections.

B. Install ports for pressure gages and thermometers at coil inlet and outlet connections.

3.6 FIELD QUALITY CONTROL

A. Prepare hydronic piping according to ASME B31.9 and as follows:

1. Leave joints uninsulated and exposed for examination during test.
2. Provide temporary restraints for expansion joints that cannot sustain reactions due to test pressure. If temporary restraints are impractical, isolate expansion joints from testing.
3. Flush hydronic piping system with clean water; then remove and clean or replace strainer screens.
4. Isolate equipment from piping. If a valve is used to isolate equipment, its closure shall be capable of sealing against test pressure without damage to the valve. Install blinds in flanged joints to isolate equipment.
5. Install safety valve, set at pressure no more than one-third higher than test pressure, to protect against damage by expanding liquid or other source of overpressure during test.

B. Perform the following tests on hydronic piping:

1. Use ambient temperature water as a testing medium.
2. While filling system, use vents installed at high points of system to release air. Use drains installed at low points for complete draining of test liquid.
3. Isolate expansion tanks and determine that hydronic system is full of water.
4. Subject piping system to hydrostatic test pressure that is not less than 1.5 times the system's working pressure. Test pressure shall not exceed maximum pressure for any vessel, pump, valve, or other component in system under test. Verify that stress due to pressure at bottom of vertical runs does not exceed ninety percent of specified yield strength or 1.7 times "SE" value in Appendix A in ASME M31.9, "Building Services Piping."
5. After hydrostatic test pressure has been applied for at least 10 minutes, examine piping joints, and connections for leakage. Eliminate by tightening, repairing, or replacing components and repeat hydrostatic test until there are no leaks.

C. Perform the following system start-up test before operating the system.

1. Open manual valves fully.
2. Inspect pumps for proper rotation.
3. Inspect air vents at high points of system and determine if all are installed and operating freely (automatic type), or bleed air completely (manual type).
4. Set temperature controls so all coils are calling for full flow.
5. Inspect and set operating temperatures of hydronic equipment, such as heat pumps, to specified values.
6. Verify lubrication of motors and bearings.
7. Clean Y-strainers.

END OF SECTION

SECTION 15300

AUTOMATIC FIRE SPRINKLERS

PART 1 GENERAL

1.1 SUMMARY

A. Section Includes:
   1. Fire sprinkler system for new Service Center Building
   2. Wet pipe overhead automatic sprinkler system
B. Related Sections:
   1. Section 07900 (Sealants)

1.2 REFERENCES

A.	NFPA 13	Installation of Sprinkler Systems
B.	NFPA 72	National Fire Alarm Code
C.	ASTM A135	Standard Specification for Electric-Resistance-Welded Steel Pipe
D.	ASTM A36	Standard Specification for Carbon Structural Steel

1.3 SUBMITTALS

A. Product Data:
   1. Pipe, fittings and valves
   2. Pipe supporting devices
   3. Seismic bracing systems
   4. Sprinkler heads
   5. Water flow switches and supervisory switches
B. Shop Drawings:
   1. All pieces of equipment used in modifying and supplementing the existing fire sprinkler system.
C. Work Plan:
   1. Provide plans in accordance with the requirements found in NFPA 13. Submit to PRMD.
   2. Calculations shall be done in accordance with NFPA 13, and shall indicate pipe numbers, beginning and end node points, all referenced on the Shop Drawings, and system demand curves. Calculations shall be bound and indexed in a loose-leaf binder. Calculations shall start at the point of the connection of the respective building fire service to the existing supply main. Calculations shall include hose stream demand.
D. Quality Assurance/Control Submittals:
   1. Design Data:
      a. Hydraulic Calculations, verification that fire protection system (FPS) meets all applicable codes and regulations
      b. Hydraulic Calculations for addition coverage by FPS
   2. Test Reports:
      a. Pressure Test results, as required by PRMD
   3. Certificates:
      a. Manufacturers' Certificates of Compliance for any materials furnished

1.4 SYSTEM DESCRIPTION

A. Design Requirements:
   1. The sprinkler systems shall be hydraulically calculated for densities, area of operation (most remote hydraulic rectangle), and maximum head spacing, as follows:
      a. Staff Area: B occupancy, 0.09 GPM/sq. ft. over 3130 sq. ft. area, and maximum of 225 sq. ft. per sprinkler head
      b. Warehouse Areas and Shop: Ordinary Hazard, Group 1 occupancy, 0.14 GPM/sq. ft. over 3870 sq. ft., and maximum of 130 sq. ft. per sprinkler heads

B. In general, Work shall include but not be limited to:
   1. Provide complete hydraulically designed wet pipe in accordance with California Fire Code and NFPA 13.
   2. Modify the existing fire sprinkler system to meet the needs of the tenant improvements as required for this project.
   3. Field verify exact conditions prior to commencing design Work.
   4. Coordinate routing of sprinkler piping with other trades.
   5. Flushing and testing in accordance with NFPA 13.
   6. Repair leaks in piping and repair or replace associated devices that are damaged during pressure testing.

1.5 GENERAL REQUIREMENTS

A. Sprinkler heads shall be located on centerlines of ceiling tiles.

1.6 COOPERATION

A. Coordinate with the Work of the other trades toward the general purpose of having the construction progress as rapidly and as smoothly as possible with a minimum of interference between one trade and another.

PART 2 PRODUCTS

2.1 MATERIALS AND EQUIPMENT

A. Piping, Fittings and Specialties:
   1. Pipe installed inside the building:
      a. Schedule 40 black steel piping in accordance with NFPA 13
      b. Conform with ASTM A135, with grooved end fittings. Grooves in Schedule 40 steel piping shall be rolled only.
   2. Pipe joints shall be screwed, flanged, or grooved utilizing standard-or light-weight grooved flexible or rigid-type couplings installed in accordance with their individual listings.
   3. Screwed joints shall be made up with approved Teflon tape or pipe thread compound. Flanged joints shall be made up with suitable gaskets and machine bolts with nuts having dimensions and conforming with American National Standard Threads. All pipe thread tapes or compounds, and all gasket materials shall be 100% free from ACM's (asbestos containing materials).
   4. Fittings used in sprinkler systems shall be cast iron or malleable iron, listed in NFPA 13 fitting Table.
   5. Flexible and rigid-type grooved couplings shall be UL listed/Fire Marshal approved, and manufacturer approved for use in sprinkler installations. Flexible couplings shall be installed as required by NFPA 13, minimum.

6. Hangers, couplings and sway bracing shall be installed in accordance with all applicable requirements of NFPA 13.

B. Sprinklers
1. Match existing sprinkler heads.
2. Or Approved Equal.

2.2 FIRESTOPPING MATERIAL

A. Fire-rated barrier penetrations, if applicable, shall be as specified in Section 07900 (Sealants), UL Fire Resistance Directory listed.
1. UL system CAJ1001 Piping through concrete wall/floor.
2. UL system CAJ5001 Insulated piping through concrete wall/floor.
3. UL system WL1003 Pipe through framed wall.
4. UL system WL5010 Insulated pipe through framed wall.
5. UL system as required by configuration of pipe, floor or wall construction.

2.3 HANGER AND SUPPORTS

A. All hangers and supports shall be in accordance with NFPA 13.

2.4 MISCELLANEOUS STEEL, BOLTS, NUTS, AND WASHERS

A. Miscellaneous steel angles, channels, brackets, rods, clamps, shall be of new materials conforming to ASTM A36. All bolts and nuts, except as otherwise specified, shall conform to ASTM. Bolts shall have heavy hexagon heads, and nuts shall be of the hexagon heavy series. All bolts, washers, nuts, anchor bolts, screws, and other hardware, unless otherwise specified, shall be galvanized, and all galvanized nuts shall have a free running fit.

PART 3 EXECUTION

3.1 INSTALLATION

A. Before installation begins, drawings and calculations for the installation of sprinklers shall be reviewed and accepted by the authorities having jurisdiction (local Fire Marshal). The Contractor shall complete the installation in accordance with the Contract Documents and the requirements of NFPA 13.

B. General:
1. The Contractor shall be responsible for all openings required for sprinkler piping.
2. Cutting structural members for passing sprinkler piping or pipe hanger fastenings will not be permitted except with approval of Owner.
3. All piping shall be reamed full bore of piping to remove all burrs, and pipe sections shall be cleaned inside to remove all chips and foreign materials prior to making joints.
4. Split wall plates or escutcheons shall be installed where exposed piping passes through a finished floor, wall, or ceiling. They shall fit snugly around piping, and shall cover the entire annular space around the piping. The finish of escutcheons or wall plates shall match the color of adjacent walls, ceiling or floors. At all fire rated floors, walls or ceilings, suitable means shall be provided at each penetration to insure effectiveness of floor or wall as a fire stop.
5. Combustible concealed spaces shall be protected with sprinklers except as allowed by NFPA 13.

END OF SECTION

SECTION 15400

PLUMBING

PART 1 GENERAL

1.1 SUMMARY

A. Section Includes:
   1. Plumbing work, including the following items:
      a. All concrete slab cutting, trenching, backfilling and patching of concrete slab associated with the plumbing installation.
      b. Plumbing fixture, equipment and piping.
      c. Sanitary vent and waste system to five feet from the building.
      d. Domestic hot and cold water distribution to five feet from the building.
      e. Service water heating and distribution.
      f. Pipe hangers and supports.
      g. Pipe insulation.
      h. Water Meter

1.2 REFERENCES

A. NSF/ANSI 61	Drinking Water System Components - Health Effects
B. ASTM D2661	Standard Specification for Acrylonitrile-Butadiene-Styrene (ABS) Schedule 40 Plastic Drain, Waste, and Vent Pipe and Fittings
C. ASTM D2665	Standard Specification for Poly(Vinyl Chloride) (PVC) Plastic Drain, Waste, and Vent Pipe and Fittings
D. ANSI/AWWA C701	Standard for Cold-Water Meters-Turbine Type, for Customer Service
E. ANSI/AWWA C702	Standard for Cold-Water Meters-Compound Type

1.3 SUBMITTALS

A. Product Data:
   1. All plumbing components
B. Shop Drawings:
   1. All plumbing components
C. Quality Assurance/Control Submittals:
   1. Certificates:
      a. Provide manufacture certification that plumbing components meet design specifications.
   2. Manufacturer's Instructions:
      a. Installation of mechanical plumbing components
D. Installation, Operation, and Maintenance Manual:
   1. Mechanical plumbing components including, but not limited to, valves, sump pumps, and water heaters

1.4 QUALITY ASSURANCE

A. Regulatory Requirements:
   1. All Work and materials shall be in full accordance with the following documents:
      a. CBC

b. CPC
c. CMC
d. CEC
e. California Fire Code (CFC)
f. California Energy Code (Title24)
g. NEC
h. ADA, CCR Title 24
i. EPA WaterSense
j. California Green Building Standard Code 2010

2. Accessible (ADA) plumbing fixtures shall comply with all of the requirements of CCR Title 24.

B. All equipment, fixtures, and fittings shall conform to CEC Certification per Section 2-5314(A), where applicable, for energy usage and water usage compliance.

1.5 EXISTING PIPING, EQUIPMENT AND APPURTENANCES

A. The locations, sizes, capacities and types of all piping, equipment and appurtenances indicated as existing are approximate and may not have been independently verified. The Contractor shall determine the exact locations, sizes, capacities, and types of existing piping, equipment, and appurtenances.

PART 2 PRODUCTS

2.1 PIPE

A. Drain waste and vent (DWV): All pipe and fittings shall be Schedule 40 ABS or DWV PVC plastic pipe and fittings, per ASTM D2661 or ASTM D2665 with type DWV fittings.

B. Domestic water piping:
1. Inside building: Type “L” copper pipe and fittings
2. Under slabs: Type “K” soft copper tube, without joints
3. Solder: Lead-free, Canfield “100% Watersafe” or Approved Equal

2.2 PIPING SPECIALTIES

A. Pipe hangers: TOLCO, UNI-STRUT, SUPER-STRUT, B-LINE, or Approved Equal, with zinc electroplated finish. Provide with cushioned clamps inserts. Piping supports shall be J-type hangers. Use beam clamps at hangers from steel beams. All miscellaneous steel, bolts, rods, nuts and washers shall be cadmium electroplated finish. Provide hangers, supports and seismic bracing at intervals per CPC table 3-2.

B. Roof flashings: At flat roofs, 26 gage galvanized sheetmetal with minimum 12” base and 6” height.

C. Firestopping Sealant: 3M Fire Barrier CP25WB + Caulk by METACAULK or Approved Equal.

2.3 VALVES

A. Use full line size ported valves, types and models as follows:
1. Ball: 2 inch and smaller Red & White series #5544, Nibco TFP600N, or Approved Equal. Bronze body with full line size porting and meeting NSF/ANSI 61.
2. Gate: 2-inch and smaller: Red & White #267, Nibco T-111, or Approved Equal. 200 PSI working pressure rating.

2.4 INSULATION

A. Manufacturers:
   1. CertainTeed Manson
   2. Knauf FiberGlass GmbH
   3. Owens-Corning Fiberglas Corp.
   4. Schuller International, Inc.
   5. Or Approved Equal
B. Above grade, inside buildings: Type ASJ/SSL-II heavy density fiber glass with all service jackets. Insulation in buildings shall have a flame spread rating not to exceed 25 and a smoke density not to exceed 450 when tested in accordance with UBC 8-1. PVC jackets shall be continuous, covering all fittings, with water-tight seams.
C. Service water heating: Provide insulation thickness per Title 24 energy standards for all recirculation sections and the first eight feet on non-recirculation systems.

2.5 FIXTURES AND EQUIPMENT

A. Shower valves and spray products:
   1. Symmons Industries
   2. Chicago Faucet
   3. Water Saver Faucets
   4. Zurn Plumbing Products
   5. Or Approved Equal
B. Toilets:
   1. American Standard, Madera FlowWise ADA
   2. Or Approved Equal
C. Urinal:
   1. Zurn Z5738 “Small Pint” 1/8 gpf, EcoVantage, Ultra Low Consumption, Hardwired Urinal System
   2. Or Approved Equal
D. Floor Clean Outs:
   1. Zurn Plumbing Products, CO-2451
   2. Or Approved Equal
E. Accessible shower stalls, including ADA accessible accessories:
   1. Best Bath Systems Model LCS3838A5T
   2. Or Approved Equal
F. Hot Water Heaters:
   1. Eemax, EX48T
   2. Or Approved Equal
G. Room #101 Sump Pump:
   1. Saniflo, Sanivite 1/3 HP, 110 vac, under sink sump pump
   2. Or Approved Equal
H. Laundry Tubs, Single:
   1. Swan ST1FM
   2. Fiat FL-1
   3. Or Approved Equal
I. Laundry Tub, Double:
   1. Swan MF-2F:
   2. Or Approved Equal
J. Laundry Faucets:

1. Simmons Symmetrix S-249-LAM
2. Or Approved Equal

K. Wall Hung Lavatories:
1. American Standard Declyn
2. Or Approved Equal

L. Bathroom Faucets:
1. Kohler K-11075-4-CP
2. Or Approved Equal

M. Hot and Cold water angle supply stops:
1. Kohler K-7607-CP
2. American Standard 7544.118.002
3. Or Approved Equal

N. Drop-In Sinks:
1. Kindred model PSS603BX
2. Or Approved Equal

O. Water Meter:
1. ANSI/AWWA C701
2. ANSI/AWWA C702
3. Manufacturers:
   a. Sensus Omni C2
   b. Or Approved Equal

P. Towel Dispensers:
1. A & J Washroom Accessories model U180A
2. Or Approved Equal

Q. Seat Cover Dispenser:
1. A & J Washroom Accessories model U851
2. Or Approved Equal

R. Toilet Tissue Dispenser:
1. A & J Washroom Accessories model UC42
2. Or Approved Equal

S. Soap Dispenser:
1. Zep Markstone model 606001
2. Or Approved Equal

T. Partitions:
1. Accurate Powder Coat Steel
2. AMPCO Powder Coated Steel
3. Hadrain Powder Coat Steel
4. Globar Powder Coat
5. Or Approved Equal

U. Mirrors:
1. A&J Washroom Accessories model U705
2. Or Approved Equal

2.6 OTHER MATERIALS

A. Other materials not specified, but required for a complete installation, shall be as selected by the Contractor subject to acceptance by Owner.

PART 3 EXECUTION

3.1 GENERAL

A. Piping shall be securely held in place by hangers, supports, and trapezes in accordance with CPC 314. All hangers shall be designed to support the pipe, including fluid and insulation.
B. Isolate all dissimilar metals with dielectric unions, except that brass or bronze valves do not need to be isolated from steel pipe.

3.2 TESTING

A. Clean and flush all piping systems and equipment to remove all contaminants.
B. Test the plumbing systems as outlined below. If the piping fails the test, repair faulty sections and retest.
   1. DWV systems: Test as needed to satisfy PRMD permit requirements.
   2. Water lines: Test as needed to satisfy PRMD permit requirements.

END OF SECTION

SECTION 15745

WATER-SOURCE HEAT PUMPS

PART 1 - GENERAL

1.1 SUMMARY

A. This Section includes the following types of water-source heat pumps:

1. Concealed horizontal or vertical units, 6 tons and smaller.

1.2 SUBMITTALS

A. Product Data: Include rated capacities, furnished specialties, and accessories for each piece of equipment provided in this section.

B. Acoustical Data: Include noise criteria (NC) ratings.

C. Product Certificates: for extended-range water source heat pump, signed by each product manufacturer.

D. Installation, Operation, and Maintenance Data

1. Extended range water source heat pumps.

E. Quality Assurance

1. Provide completed heat pump equipment start-up sheets for each heat pump. Information shall be required for test and balance report.

F. Operation and Maintenance Data: For water-source heat pumps to include in emergency, operation, and maintenance manuals.

1.3 QUALITY ASSURANCE

A. Extended range water source heat pumps with temperature controls; factory assembled, tested and rated according to performance specification ISO/ARI-13256-1 for geothermal heat pumps.

B. Electrical Components, Devices, and Accessories: Listed and labeled as defined in NFPA 70, Article 100, by a testing agency acceptable to authorities having jurisdiction, and marked for intended use.

1.4 WARRANTY

A. Special Warranty: Manufacturer's standard form in which manufacturer agrees to repair or replace components of water-source heat pumps that fail in materials or workmanship within specified warranty period.

1. Standard Warranty Period: 12 months from start-up.
2. Extended Warranty: 4 years in addition to Standard Warranty.

B. Occupancy Adjustments: When requested within 12 months of date of Substantial Completion, provide on-site assistance in adjusting system to suit actual occupied conditions.

PART 2 - PRODUCTS

2.1 MANUFACTURERS

A. In other Part 2 articles where titles below introduce lists, the following requirements apply to product selection:

1. Manufacturers: Subject to compliance with requirements, provide products by one of the manufacturers specified.

2.2 CONCEALED WATER-SOURCE HEAT PUMPS, 6 TONS AND SMALLER

A. Manufacturers:

1. ClimateMaster, Inc.
2. Trane.
3. WaterFurnace International, Inc.

B. Description: Packaged water-source heat pump with temperature controls; factory assembled, tested, and rated according to ARI-ISO-13256-1.

C. Cabinet and Chassis: Galvanized-steel casing with the following features:

1. Access panel for access and maintenance of internal components.
2. Knockouts for electrical and piping connections.
3. Flanged duct connections.
4. Cabinet Insulation: Glass-fiber liner, minimum 1/2 inch thick, complying with UL 181.
5. Condensate Drainage: Plastic or stainless-steel drain pan with condensate drain piping projecting through unit cabinet and complying with ASHRAE 62.1.
6. Airstream Surfaces: Surfaces in contact with the airstream shall comply with requirements in ASHRAE 62.1.

7. Sound Attenuation Package:

   a. Minimum 0.598-inch-thick compressor enclosure and front panel. Minimum 0.0937-inch-thick foam gasket around the compressor and perimeter of end panel.
   b. Sound attenuating blanket over compressor.

D. Fan: Direct driven, centrifugal, with multispeed motor resiliently mounted in fan inlet.
   1. Motor: Multispeed, permanently lubricated, ECM motor.

E. Water Circuit:

   1. Refrigerant-to-Water Heat Exchangers:

      a. Coaxial heat exchangers with cupronickel water tube with enhanced heat-transfer surfaces inside a steel shell; both shell and tube leak tested to 450 psig on refrigerant side and 400 psig on water side. Factory mount heat exchanger in unit on resilient rubber vibration isolators.

   2. Motorized (2-Way) Water Valve: Stop water flow through the unit when compressor is off.

   3. Recycled water from the Waste Water Treatment Plant will be used as the source water. The water will be used after the A-7 Post Microfiltration process at the Plant. Recycled water samples identify the following properties:

a.	Calcium	30 mg/l
b.	Iron	ND (not detected)
c.	Magnesium	18 mg/l
d.	Bicarbonate Alkalinity as CaCO3	120 mg/l
e.	Carbonate Alkalinity as CaCO3	ND
f.	Hydroxide Alkalinity as CaCO3	ND
g.	Residual Chlorine	2.1 mg/l
h.	Total Alkalinity as CaCO3	120 mg/l
i.	Ammonia as NH3	7.2 mg/l
j.	Carbon Dioxide, Free	20 mg/l
k.	Hardness, Total	148 mg/l
l.	Hydroxide	ND
m.	pH	7.09
n.	Total Dissolved Solids	230 mg/l
o.	Total Suspended Solids	ND
p.	Langelier Index	-0.87

F. Refrigerant-to-Air Coils: Copper tubes with aluminum fins, leak tested to 450 psig.

G. Refrigerant Circuit Components:

   1. Sealed Refrigerant Circuit: Charge with R-410A refrigerant.

2. Charging Connections: Service fittings on suction and liquid for charging and testing.
3. Reversing Valve: Pilot-operated sliding-type valve designed to be fail-safe in heating position with replaceable magnetic coil.
4. Compressor: Hermetic scroll compressor installed on vibration isolators and housed in an acoustically treated enclosure with factory-installed safeties as follows:

    a. Antirecycle timer.
    b. High-pressure cutout.
    c. Low-pressure cutout or loss of charge switch.
    d. Internal thermal-overload protection.
    e. Freezestat to stop compressor if water-loop temperature in refrigerant-to-water heat exchanger falls below 35 deg F.
    f. Condensate overflow switch to stop compressor with high condensate level in condensate drain pan.

5. Refrigerant Piping Materials: ASTM B 743 copper tube with wrought-copper fittings and brazed joints.
6. Pipe Insulation: Refrigerant minimum 3/8-inch-thick, flexible elastomeric insulation on piping exposed to airflow through the unit. Maximum 25/50 flame-spread/smoke-development indexes according to ASTM E 84.
7. Refrigerant Metering Device: Thermal expansion valve to allow specified operation with entering-water temperatures from 25 to 125 deg F.

H. Filters: Disposable, pleated type, 2-inch (50mm) thick a Minimum Efficiency Reporting Value of 11 according to ASHRAE 52.2 and in compliance with CalGreen 5.504.5.3.

I. Controls:

1. Basic Unit Controls:

    a. Low- and high-voltage protection.
    b. Overcurrent protection for compressor and fan motor.
    c. Random time delay, three to ten seconds, start on power up.
    d. Time delay override for servicing.
    e. Control voltage transformer.

2. Thermostat:

    a. Wall-Mounted Thermostat:

        1) Heat-cool-off switch.
        2) Fan on-auto switch.
        3) Automatic changeover.
        4) Exposed temperature set point.
        5) Exposed temperature indication.
        6) Deg F indication.

7) Occupancy Sensor with "short vacancy" and "long vacancy" settings.

b. Unoccupied period override push button.
c. LED to indicate fault condition at heat pump.
d. Data entry and access port.

1) Input data include room temperature set points for occupied and unoccupied periods.
2) Output data include room temperature supply-air temperature, entering-water temperature, operating mode, and status.

3. Terminal Controller:

a. Scheduled operation for occupied and unoccupied periods on 7-day clock with minimum 4 programmable periods per day.
b. Two-hour unoccupied period override period.
c. Remote control panel to contain programmable timer and LED for fault condition.
d. Compressor disable relay to stop compressor operation for demand limiting or switch to unoccupied operation.
e. Automatic restart after five minutes if fault clears. Lockout after three attempts to restart following fault. Indicate fault for service technician.
f. Return-air temperature high-limit (firestat). Stop unit on high temperature.
g. Backup for volatile memory.
h. Differential pressure switch to indicate fan status. Fan failure alarm.
i. Differential pressure switch to indicate filter status. Dirty filter alarm.

J. Electrical Connection: Single electrical connection with fused disconnect.

2.3 HOSE KITS

A. General: Hose kits shall be designed for minimum 400 psig working pressure, and operating temperatures from 33 to 211 deg F. Tag hose kits to equipment designations.

B. Hose: Length 36 inches. Minimum diameter, equal to water-source heat-pump connection size.

C. Isolation Valves: Two-piece bronze-body ball valves with stainless-steel ball and stem and galvanized-steel lever handle. Provide valve for supply and return. If balancing device is combination shutoff type with memory stop, the isolation valve may be omitted on the return.

D. Strainer: Y-type with blowdown valve in supply connection.

E. Balancing Device: Mount in return connection. Include meter ports to allow flow measurement with differential pressure gage.

1. Automatic balancing valve, factory set to operate within 10 percent of design flow rate over a 40:1 differential pressure range of 2 to 80 psig.
2. Manual, calibrated-orifice balancing valve.

PART 3 - EXECUTION

3.1 EXAMINATION

A. Examine areas and conditions for compliance with requirements for installation tolerances and other conditions affecting performance of water-source heat pumps.

B. Examine roughing-in for piping and electric installations for water-source heat pumps to verify actual locations of piping connections and electrical conduit before installation.

C. Proceed with installation only after unsatisfactory conditions have been corrected.

3.2 INSTALLATION

A. Equipment Mounting: Install water-source heat pumps with continuous-thread hanger rods and spring hangers with vertical-limit stop of size required to support weight of water-source heat pump unit.

1. Comply with requirements for seismic-restraint devices specified in Comply with requirements for seismic-restraint devices specified in Section 15050 (Basic Mechanical Materials and Methods).
2. Comply with requirements for hangers and supports specified in Section 15050 (Basic Mechanical Materials and Methods).

3.3 CONNECTIONS

A. Drawings indicate general arrangement of piping, fittings, and specialties. Specific connection requirements are as follows:

1. Connect supply and return hydronic piping to heat pump with hose kits.
2. Connect heat-pump condensate drain pan to indirect waste connection with condensate trap of adequate depth to seal against the pressure of fan. Install cleanouts in piping at changes of direction.

B. Duct installation requirements are specified in other Sections. Drawings indicate general arrangement of ducts. Specific connection requirements are as follows:

1. Connect supply and return ducts to water-source heat pumps with flexible duct connectors specified in Section 15815 (Ductwork and Accessories).

C. Install electrical devices furnished by manufacturer but not specified to be factory mounted.

D. Install piping adjacent to machine to allow service and maintenance.

E. Ground equipment according to Section 16060 (Grounding and Bonding for Electrical Systems).

F. Connect wiring according to Sections 16128 (Raceways and Boxes) and 16140 (Wiring Devices).

3.4 STARTUP SERVICE

A. Engage a factory-authorized service representative to perform startup service.

B. Complete installation and startup checks according to manufacturer's written instructions and do the following:

1. Inspect for visible damage to unit casing.
2. Inspect for visible damage to compressor, coils, and fans.
3. Inspect internal insulation.
4. Verify that labels are clearly visible.
5. Verify that clearances have been provided for servicing.
6. Verify that controls are connected and operable.
7. Verify that filters are installed.
8. Adjust vibration isolators.
9. Inspect operation of barometric dampers.
10. Verify bearing lubrication on fan.
11. Inspect fan-wheel rotation for movement in correct direction without vibration and binding.
12. Start unit according to manufacturer's written instructions.
13. Complete startup sheets and attach copy with Contractor's startup report.
14. Inspect and record performance of interlocks and protective devices; verify sequences.
15. Operate unit for an initial period as recommended or required by manufacturer.
16. Verify thermostat and humidistat calibration.
17. Inspect controls for correct sequencing of heating, mixing dampers, refrigeration, and normal and emergency shutdown.
18. Start refrigeration system and measure and record the following:

    a. Coil leaving-air, dry- and wet-bulb temperatures.

b. Coil entering-air, dry- and wet-bulb temperatures.
c. Outdoor-air, dry-bulb temperature.
d. Outdoor-air-coil, discharge-air, dry-bulb temperature.

19. Measure and record the following minimum and maximum airflows. Plot fan volumes on fan curve.

a. Supply-air volume.
b. Return-air volume.
c. Relief-air volume.
d. Outdoor-air intake volume.

3.5 ADJUSTING

A. Adjust initial temperature set points.

B. Set field-adjustable switches and circuit-breaker trip ranges as indicated.

C. Occupancy Adjustments: When requested within 12 months of date of Substantial Completion, provide on-site assistance in adjusting system to suit actual occupied conditions. Provide up to two visits to Project during other than normal occupancy hours for this purpose.

3.6 CLEANING

A. Replace filters used during construction prior to air balance or substantial completion.

B. After completing installation of exposed, factory-finished water-source heat pumps, inspect exposed finishes and repair damaged finishes.

3.7 DEMONSTRATION

A. Engage a factory-authorized service representative to train Owner's maintenance personnel to adjust, operate, and maintain water-source heat pumps.

END OF SECTION

SECTION 15791

RECYCLED WATER STORAGE TANK

PART 1 GENERAL

1.1 SUMMARY

A. Section Includes:
   1. Storage tank
   2. Accessories:
      a. Sealable top manway
      b. Ladder and mounting accessories
      c. Connections
      d. Sight glass liquid level indicators
      e. Seismic lateral restraint system

B. Related Sections:
   1. Section 13442 (Primary Elements and Transmitters)

1.2 REFERENCES

A.	ASTM D638	Tensile Properties of Plastics
B.	ASTM D790	Flexural Properties of Unreinforced and Reinforced Plastics and Electrical Insulating Materials
C.	ASTM D1505	Density of Plastics by the Density-Gradient Technique
D.	ASTM D1525	Test Method for Vicat Softening Temperature of Plastics
E.	ASTM D1693	Test Method for Environmental Stress-Cracking of Ethylene Plastics
F.	ARM	Association of Rotational Molders (ARM) Standards: Low Temperature Impact Resistance
G.	ANSI B16.5	Pipe Flanges and Flanged Fittings

1.3 SUBMITTALS

A. Product Data:
   1. Storage Tank
   2. Sizes and detailed dimensions of all major tank components
   3. Details on field assembly and installation
   4. Fitting locations
   5. Shop testing procedures

B. Quality Assurance/Control Submittals:
   1. Calculations for seismic lateral restraint system stamped and signed by a professional civil or structural engineer registered in the State of California
   2. Certificates:
      a. Certification of material suitability for chemicals to be stored
      b. Certification of manufacturer’s experience with polyethylene tanks and connections up to 12 inches

C. Provide Owner with a written statement that manufacturer's equipment has been installed properly, started up, and is ready for operation by Owner

D. Installation, Operation, and Maintenance Manual:
   1. Storage tank

1.4 WARRANTY

A. Warranty on material and workmanship for tanks and fittings:
   1. Three years from date of acceptance against defective materials and workmanship. Acceptance shall be defined when startup and field-testing show that the equipment operates satisfactorily and meets all specification herein.
   2. The warranty shall cover free repair or non-prorated replacement of the tank in the event of failure during the warranty period.

PART 2 PRODUCTS

2.1 ACCEPTABLE MANUFACTURERS

A. Subject to compliance with the Contract Documents, the following manufacturers are acceptable:
   1. Peabody Engineering and Supply, Inc.
   2. Or Approved Equal

2.2 PERFORMANCE AND DESIGN REQUIREMENTS

A. Size and Dimensions:
   1. Storage Tank:
      a. Nominal capacity: 5,000 gallons
      b. Approx. Tank diameter: 10 feet - 0 inches
      c. Approx. overall height: 9 feet - 3 inches
      d. Fluid stored: Tertiary Filter Effluent
B. Shape: Cylindrical with flat bottom and closed domed top
C. Service:
   1. Storage Tank:
      a. Potential chemical concentration:
         1) Calcium 30 mg/l
         2) Iron ND (not detected)
         3) Magnesium 18 mg/l
         4) Bicarbonate Alkalinity as $CaCO_3$ 120 mg/l
         5) Carbonate Alkalinity as $CaCO_3$ ND
         6) Hydroxide Alkalinity as $CaCO_3$ ND
         7) Residual Chlorine 2.1 mg/l
         8) Total Alkalinity as $CaCO_3$ 120 mg/l
         9) Ammonia as NH_3 7.2 mg/l
         10) Carbon Dioxide, Free 20 mg/l
         11) Hardness, Total 148 mg/l
         12) Hydroxide ND
         13) pH 7.09
         14) Total Dissolved Solids 230 mg/l
         15) Total Suspended Solids ND
         16) Langelier Index -0.87
      b. Location: Inside Filtration Building
      c. Ambient Temperature: 30 Degrees F (winter), 100 Degrees F (summer)
      d. Fluid Temperature: 50 Degrees F (winter), 70 Degrees F (summer)
      e. Filling schedule: Continuous on demand

2.3 MATERIALS

A. Manufactured of virgin, FDA approved, high density, linear rotationally molded polyethylene. High-Density Linear Polyethylene resin as manufactured by Exxon Chemical, or Approved Equal.
B. Resin Linear Polyethylene.
   1. Mechanical Properties ASTM Reference Performance, nominal values:
      a. Density, ASTM D1505 0.942 gms/cc
      b. Tensile strength at yield 2 "/minute, ASTM D638, 2,950 psi.
      c. Elongation at break at yield 2 "/minute, ASTM D638, >1000 percent
      d. Flexural modulus, ASTM D790, 129,000 psi
      e. Association of Rotational Molders (ARM) impact strength, ¼" sample, ARM, 244 J (180 ft. lbs.)
      f. Brittleness temperature, ASTM D746-79, <-175 Degrees F.
      g. Environmental stress crack resistance, ASTM D1693, >1000-hrs
      h. Vicat softening point, ASTM D1525-70, 244 Degrees F.
C. Tank finish shall be opaque black polyethylene.
D. Wall thickness shall be designed for safe storage of liquids up to 1.0 specific gravity for water storage.
E. Tank shall be free of contamination from hydrogen peroxide or other chemical that may leach out of tank wall and potentially contaminate water.

2.4 FABRICATION AND MANUFACTURE

A. Tank shall be vertical with flat bottom and straight sides.
B. Manway shall be provided with all necessary gaskets, bolts, and covers made from materials compatible with the chemical service requirements of the tank application.
C. Tank shall be provided with hinged lid.
D. Fittings:
   1. Locate as indicated
   2. Nozzles:
      a. Manufactured of linear polyethylene compatible with the tank materials
      b. Installed using thermo pneumatic welding techniques to achieve a seamless, gasketless connection to the tank
      c. Welding rod to be used shall be specially manufactured of compatible resin to tank and nozzle
      d. Welding rod shall be extruded with UV inhibitors to match the tank resin base material
   3. Flanges:
      a. All thermopneumatically welded flanged fittings shall have no less than (6) six passes of 5/32" diameter welding rod and shall be reinforced with no fewer than (4) four gussets. All fittings shall terminate in a 150# drilling ANSI pattern Van-Stone style flange or a female national iron pipe thread connection. All female national iron pipe thread fittings shall be welded with no less than (6) six passes of 5/32" diameter welding rod. No mechanically attached fittings or fittings in which a gasket seal is used on the primary tank wall shall be accepted.
      b. Flange faces and threaded connections shall be perpendicular to the centerline of the duct within (1) one degree and shall be flat to plus or minus 1/8 inch. The minimum flange shear thickness shall be four times the flange thickness. Flanges shall be

connected to mating flanges using torque values not exceeding those set as maximum allowable by tank manufacturer.

c. Flanges shall be machined to within tolerances acceptable to properly seat within flange ring. No lap joint connections shall be acceptable.
d. Convoluted, low torque full-face flange gaskets shall be used on all flange connections.
e. All flanges shall be covered with suitable flange protectors or blind flanges, as appropriate

4. Connection location and provided by manufacturer:

Quantity	Connection	Size	Location
1	Tertiary Filter Effluent Fill	12 inches	Dome Top
1	Recycled Water with Siphon Elbow	12 inches	Side (Bottom). Siphon elbow 6 inches from tank floor. Centerline of bottom flange 18 to 22 inches from tank floor.
1	Tertiary Filter Effluent Overflow	12 inches	Side (Top)
1	Vent	12 inches	Dome Top
2	Level Element	2 inches	Dome Top
1	Hose bibb	2 inches	Side (top, near ladder)

E. Tie-down Assembly:
1. Lateral restraint for seismic Zone 4 and 110 miles per hour wind load. Designed and provided by tank manufacturer for installation by Contractor covered in submittals
   a. Seismic forces shall be considered acting at the center of gravity of the piece under consideration.
   b. Anchorages shall be designed and detailed assuming that they will not receive Special Inspection as defined in the UBC.
2. Conform with UBC.
3. The tank top shall be designed to provide tie-down lugs integrally molded into the top of the tank. The tie-down lugs shall be designed to allow tank retention in both seismic and wind loading situations without tank damage.
4. All anchor bolts and hardware required to be provided by tank manufacturer. All components of restraint system shall be steel. Restraint system shall be attached to tank pad.

F. Sight Level Gauge:
1. Sight level gauge shall be provided by tank manufacturer
2. Locate in accessible and visible area

G. Ladder:
1. Ladder shall be provided by tank manufacturer
2. 42″ walk-thru
3. Design: Per OSHA requirements
4. Connection: Ladder mounting kit with standoff clips and mounting kit
5. Locate in accessible area

H. Vent Screen:
1. Integral poly screen attached to the top interior surface of the vent assembly shall be provided by manufacturer.

I. The top of the vent shall have a polyethylene rain/dust cap permanently affixed to prevent foreign liquids or other materials from entering the tank. Level Transmitter:

1. See Section 13442 (Primary Elements and Transmitters)

J. Prior to shipping:
1. Upon completion of fabrication, tank shall be thoroughly cleaned inside and dried to remove any residue, dirt, chips, rust, oil, grease or other foreign material.
2. After proper interior cleaning, all tank openings shall be sealed to prevent any foreign materials from entering tank and prevent damage to the nozzles during transit and installation.
3. Tank exterior shall be cleaned with detergent and water to remove any dirt or other visual impairments to tank surface.

PART 3 EXECUTION

3.1 INSPECTION

A. Hydrostatic Testing: Before equipment attached:
1. Plug outlets
2. Fill with chemically compatible liquid
3. Check for leaks after 6 hours minimum
4. Repair all leaks and retest, if needed

3.2 INSTALLATION

A. General:
1. Per manufacturer’s recommendations on concrete slab

B. Cleaning:
1. Thoroughly rinse with water to remove debris from manufacturing and construction
2. Dry tank before operating

C. Marking:
1. All cutouts from the vessel shall be marked, indicating original location, and given to Owner upon request

3.3 FIELD QUALITY CONTROL

A. Employ and pay for services of equipment manufacturer’s field service representative(s) to:
1. Inspect equipment covered by this Specification
2. Supervise adjustments and installation checks
3. Provide Owner with a written statement that manufacturer's equipment has been installed properly, started up and is ready for operation by Owner
4. Instruct Owner’s personnel for a minimum of 4-hours at Site on operation and maintenance of equipment

END OF SECTION

SECTION 15792

RECYCLED WATER HYDRONIC PUMPS

PART 1 GENERAL

1.1 SUMMARY

A. Section Includes:
   1. Modification to existing close coupled pumps.
   2. New Pump Motors for existing pumps.
B. Related Sections:
   1. Section 15050 (Basic Mechanical Materials and Methods)
   2. Section 15181 (Hydronic Piping and Specialties)
   3. Section 16050 (Basic Electrical Materials and Methods)

1.2 REFERENCES

A. ANSI/ HI 1.1-1.5-1995 Centrifugal Pump Standards
B. UL 778 Motor Operated Water Pumps

1.3 SUBMITTALS

A. Product Data:
   1. Pump motors
B. Quality Assurance/Control Submittals:
C. Installation, Operation, and Maintenance Manual:
   1. Pump Motors

1.4 QUALITY ASSURANCE

A. Verify new pump motor performance (RW-1 and RW-2)
   1. Quantity: 2
   2. Motor Size: 3 hp
   3. Motor RPM: 1760
   4. 3Ph, 60 Hz, 230V
   5. Performance curve of pump at design condition
   6. Design condition: 100 gpm at 40 ft at 1760 rpm.
   7.
B. Electrical Components, Devices and Accessories: Listed and labeled as defined in NFPA 70, Article 100, by a testing agency acceptable to authorities having jurisdiction, and marked for intended use.
C. Coordinate existing pumps with new 3hp motors and existing VFD drive system.

1.5 EXISTING CONDITIONS

A. Existing pumps
   1. Manufacturer: G&L
   2. Model: SSH http://www.goulds.com/GP-Product-ID-192.asp
   3. Size: 2 ½ x 3-6
   4. Impeller Diameter: 7.125

PART 2 PRODUCTS

2.1 MANUFACTURERS

A. Pump Motors
   1. Baldor
   2. Or Approved Equal

2.2 NAMEPLATE DATA

A. Motor:
   1. Motor Size: 3 hp
   2. Motor RPM: 3500
   3. Motor RPM: 1760
   4. 3Ph, 60 Hz, 230-V
   5. 182JM Frame
   6. Premium efficiency

PART 3 EXECUTION

3.1 EXAMINATION

A. Examine roughing-in for piping systems to verify actual location of piping connections.

3.2 CONNECTIONS

A. Remove existing 7.5 hp motors and replace with 3hp motors
B. Remove existing "XR1" and "XR2" labelling and replace with "RW-1" and "RW-2" labelling on pumps and VFDs and wiring and power panel.
C. Piping installation requirements are specified in Section 15181 (Hydronic Piping and Specialties)
D. Install piping adjacent to machine to allow service and maintenance.
E. Connect piping to pumps. Install valves that are same size as piping connected to pumps.
F. Install suction and discharge pipe sizes equal to or greater than diameter of pump nozzles.
G. Install check valve on discharge side of pumps.
H. Install Y-type strainer and suction diffuser and shutoff valve on suction side of pumps.
I. Install flexible connectors on suction and discharge sides of base-mounted pumps between pump casing and valves.
J. Install pressure gages on pump suction and discharge, at integral pressure-gage tapping, or install single gage with multiple input selector valve.
K. Install electrical connections for power, controls, and devices per Section 16050 (Basic Materials and Methods)
L. Install suction diffuser or minimum 5 pipe diameters between elbow and pump. Angle patter, iron body and end cap, pump-inlet fitting; with bronze startup and bronze or stainless steel permanent strainers; bronze or stainless steel straightening vanes; drain plug; and factory-fabricated support.

3.3 STARTUP SERVICE

A. Perform start-up service:
   1. Complete start-up checks according to manufacturer's written instructions
   2. Check piping connections for tightness
   3. Clean strainers on suction piping

4. Perform the following start-up checks for each pump before starting:
   a. Verify bearing lubrication
   b. Verify that pump is free to rotate by hand. If pump is bound or drags, do not operated until cause of trouble is determined and corrected.
   c. Verify that pump is rotating in the correct direction
5. Prime pump by opening suction valves and closing drains, and prepare pump for operation
6. Start motor
7. Open discharge valve slowly

END OF SECTION

SECTION 15793

RECYCLED WATER SYSTEM PIPING AND SPECIALTIES

PART 1 GENERAL

1.1 SUMMARY

A. Section Includes:
   1. Condenser Recycled Water (RW) piping (above ground)
   2. Tertiary Filter Effluent water piping (TFE)
   3. Reverse Filtration water piping (RF)
   4. Piping connection
   5. Expansion Tank

B. Related Sections:
   1. Section 09900 (Paints and Coatings)
   2. Section 10440 (Interior Signage)
   3. Section 01737 (Openings and Penetrations in Construction)
   4. Section 13442 (Primary Elements and Transmitters)
   5. Section 15090 (Recycled Water Pipe Support Systems)
   6. Section 15181 (Hydronic Piping and Specialties)

1.2 REFERENCES

A.	ANSI B40.1	Gauges - Pressure Indicating Dial Type - Elastic Element
B.	ASTM A53	Standard Specification for Pipe, Steel, Black and Hot-Dipped, Zinc-Coated Welded and Seamless
C.	ASTM A234	Standard Specification for Pipe Fittings of Wrought Carbon Steel and Alloy Steel for Moderate and Elevated Temperatures
D.	ASTM A269	Standard Specification for Seamless and Welded Austenitic Stainless Steel Tubing for General Service
E.	AWWA C200	Steel Water Pipe 6 IN and Larger
F.	AWWA C207	Standard for Steel Pipe Flanges for Waterworks Service - Sizes 4 IN through 144 IN
G.	AWWA C208	Dimensions for Fabricated Steel Water Pipe Fittings
H.	AWWA C606	Grooved and Shouldered Joints

1.3 SUBMITTALS

A. Product Data:
   1. Piping Materials:
      a. Acknowledgement that products submitted meet requirements of standards referenced.
      b. Copies of manufacturer's written directions regarding material handling, delivery, storage and installation.
      c. Separate schedule sheet for each piping system scheduled in this Section showing compliance of all system components. Attach technical product data on gaskets, pipe, fittings, and other components.
   2. Valves: include flow and pressure drop curves based on manufacturer’s testing for calibrated-orifice balancing valves and automatic flow-control valves.

3. Expansion Tank

B. Shop Drawings:
1. Fabrication and/or layout drawings:
a. Interior piping drawings (minimum scale 1/8 inch equals 1 foot) with information including:
1) Dimensions of piping from column lines or wall surfaces
2) Centerline dimensions of piping
3) Centerline elevation and size of intersecting ductwork, conduit/conduit racks, or other potential interferences requiring coordination
4) Location and type of pipe supports and anchors
5) Locations of valves and valve actuator type
6) Details of fittings, tapping locations, equipment connections, flexible expansion joints, connections to equipment, and related appurtenances
7) Acknowledgement of valve, equipment and instrument tag numbers
8) Provisions for expansion and contraction
9) Line slopes and air release vents
2. Structural Calculation: All pipe and piping specialty hangers suspended or anchored from the building structure

C. Qualification Assurance/Control Submittals:
1. Test Reports:
a. Copies of pressure test results on all piping systems
b. Reports defining results of delectric testing and corrective action taken

c. Notification of time and date of piping pressure tests

D. Installation, Operation, and Maintenance Manuals:
1. Hydropneumatic Expansion Tank

1.4 QUALITY ASSURANCE

A. Coordinate flange dimensions between piping, valves, and equipment

1.5 DELIVERY, STORAGE, AND HANDLING

A. Protect pipe coating during handling using methods recommended by manufacturer. Use of bare cables, chains, hooks, metal bars or narrow skids in contact with coated pipe is not permitted.

B. Prevent damage to pipe during transit. Repair abrasions, scars, and blemishes. If repair of satisfactory quality cannot be achieved, replaced damaged material immediately.

PART 2 PRODUCTS

2.1 MANUFACTURERS

A. Pipe saddles (for gage installation):
1. Dresser Style 91 (steel and ductile iron systems)
2. Dresser Style 194 (non-metallic systems)
3. Or Approved Equal

B. Hydropneumatic Expansion Tank:
1. Wessels Company
2. Bell & Gossett; Div. of ITT Industries
3. Or Approved Equal

C. Pressure, Flow, and Level Transmitters
   1. See Section 13442 (Primary Elements and Transmitters)
D. Pressure and Temperature Gauges
   1. Ashcroft
   2. Weiss Industries
   3. Or approved equal

2.2 PERFORMANCE REQUIREMENTS

A. Hydronic piping components and installation shall be capable of withstanding the following working pressure and maximum temperatures:
   1. RW Piping: 125 psi
   2. TFE Piping: 125 psi
   3. RF Piping: 125 psi
   4. Hydro-pneumatic Expansion Tank: 150 psig, 200 deg F.

2.3 PIPING APPLICATIONS

A. RW, TFE and RF piping:
   1. Pipe Size: 3 to 12 inch
      a. Materials: Steel, Grade B, black. Schedule 40 if threaded. If grooved type joining, use pipe thickness per AWWA C606
      b. Reference: ASTM A53
      c. Lining: None
      d. Coating: Paint banding. Refer to Section 09900 (Paints and Coatings) for color and placement. Banding on existing piping to remain.
      e. Signage:
         1) Pipe labeling. Refer to Section 10440 (Interior Signage). Place “RW” and “RWR” labels with arrows in the flow direction on new piping.
      f. Fitting: Steel meeting ASTM A234
      g. Joints: Threaded or grooved type mechanical coupling (AWWA C606) joints
         1) With both systems, provide rigid flanges at equipment, valves and structure penetrations
      h. Gaskets and O-rings:
         1) O-rings: Neoprene or rubber
         2) Flanged joints: Rubber, AWWA C207
         3) Grooved coupling joints: Rubber, AWWA C606

2.4 AIR CONTROL DEVICES

A. Hydro Pneumatic Expansion Tanks:
   1. Provide, as indicated, precharged 80 gallon hyro-pneumatic tank. Each tank shall be supplied with a replaceable heavy duty butyl rubber bladder. The tank shall have a 0.302- 32 charging valve connection (standard tire valve) to facilitate adjusting precharge pressure to actual system requirements. The water is to be contained in the butyl bladder. The tank shall have a baked epoxy finish.
   2. Tank: Carbon steel, rated for 150 psi working pressure and 200 deg F maximum operating temperature. Tanks shall be factory tested with taps fabricated and labeled according to ASME Boiler and Pressure Vessel Code: Section VIII, Division 1.
   3. Bladder: Heavy Duty Butyl securely sealed into tank to separate air charge from system water to maintain required expansion capacity.

2.5 PRESSURE AND TEMPERATUREGAUGES

A. Provide as indicated.

PART 3 EXECUTION

3.1 EXPOSED PIPING INSTALLATIONS

A. Install piping in vertical and horizontal alignment as indicated.
B. Alignment of piping smaller than 4 inches may not be indicated. However, install as required to provide a complete system and with clearance and allowance for:
   1. Expansion and contraction
   2. Operation and access to equipment, doors, windows, hoists, moving equipment
   3. Headroom and walking space for working areas and aisles
   4. System drainage and air removal
C. Enter and exit through structure walls, floor and ceilings using penetrations and seals specified in Section 01737 (Openings and Penetrations in Construction) and as indicated.
D. Install vertical piping runs plumb and horizontal piping runs parallel with structure walls.
E. Pipe Support:
   1. Use methods of piping support as indicated and as required in Section 15090 (Recycled Water Pipe Support Systems).
   2. Where pipes run parallel and at same elevation or grade, they may be grouped and supported from common trapeze-type hanger, provided hanger rods are increased in size as specified for total supported weight. The pipe in the group requiring the least maximum distance between supports shall set the distance between trapeze hangers.
   3. Size pipe supports with consideration to specific gravity of liquid being piped.
F. Locate and size sleeves and castings required for piping system. Arrange for chases, recesses, inserts or anchors at proper elevation and location.
G. Use reducing fittings throughout piping systems. Bushings will not be allowed unless specifically approved.
H. Unions:
   1. Install in position which will permit valve or equipment to be removed without dismantling adjacent piping.
   2. Mechanical type couplings may serve as unions.
   3. Additional flange unions are not required at flanged connections.
I. Provide full face gaskets on all systems.
J. Anchorage and Restraint:
   1. Anchor or harness exposed piping subjected to forces in which joints are installed to prevent separation of joints and transmission of stress into equipment or structural components not designed to resist those stresses.
K. Equipment Pipe Connections:
   1. Equipment - General:
      a. Exercise care in bolting flanged joints so that there is no restraint on the opposite end of pipe or fitting which would prevent uniform gasket pressure at connection or would cause unnecessary stresses to be transmitted to equipment flanges.
      b. Where push-on joints are used in conjunction with flanged joints, final positioning of push-on joints shall not be made until flange joints have been tightened without strain.

c. Tighten flange bolts at uniform rate which will result in uniform gasket compression over entire area of joint. Provide tightening torque in accordance with manufacturer's recommendations.
d. Support and match flange faces to uniform contact over their entire face area prior to installation of any bolt between the piping flange and equipment connecting flange.
e. Permit piping connected to equipment to freely move in directions parallel to longitudinal centerline when and while bolts in connection flange are tightened.
f. Align, level, and wedge equipment into place during fitting and alignment of connecting piping.
g. Grout equipment into place prior to final bolting of piping but not before initial fitting and alignment.
h. To provide maximum flexibility and ease of alignment, assemble connecting piping with gaskets in place and minimum of four bolts per joint installed and tightened. Test alignment by loosening flange bolts to see if there is any change in relationship of piping flange with equipment connecting flange. Realign as necessary, install flange bolts and make equipment connection.

L. Provide insulating components where dissimilar metals are joined together.
M. Install sample tap as indicated.

3.2 CONNECTIONS WITH EXISTING PIPING

A. Where connection between new Work and existing Work is made, use suitable and proper fittings to suit conditions encountered.
B. Perform connections with existing piping at time and under conditions which will least interfere with service to customers affected by such operation.
C. Undertake connections in fashion which will disturb system as little as possible.
D. Provide suitable equipment and facilities to dewater, drain, and dispose of liquid removed without damage to adjacent property.
E. Where connections to existing systems necessitate employment of past installation methods not currently part of trade practice, utilize necessary special piping components.

3.3 HYDROPNEUMATIC EXPANSION TANK

A. Install expansion tank on the floor. Vent and purge air from hydronic system and ensure tank is properly charged with air.

3.4 PIPE JOINT CONSTRUCTION

A. Provide pipejoint construction as indicated in Section 15181 (Hydronic Piping and Specialities).

3.5 FIELD QUALITY CONTROL

A. Provide field quality control as indicated in Section 15181 (Hydronic Piping and Specialties).

END OF SECTION

SECTION 15794

RECYCLED WATER VALVES: BASIC REQUIREMENTS

PART 1 GENERAL

1.1 SUMMARY

A. Section Includes:
   1. Valves, actuators, and valve appurtenances

1.2 REFERENCES

A.	ANSI B1.20.1	Pipe Threads, General Purpose
B.	ANSI B16.1	Cast Iron Pipe Flanges and Flanged Fittings
C.	ANSI B16.18	Cast Copper Alloy Solder Joint Pressure Fittings
D.	AWWA C111	Rubber-Gasket Joints for Ductile Iron and Gray Iron Pressure Pipe and Fittings
E.	AWWA C207	Steel Pipe Flanges for Waterworks Service - Sizes 4 IN through 144 IN
F.	AWWA C500	Gate Valves for Water and Sewerage Systems
G.	AWWA C550	Protective Epoxy Interior Coatings for Valves and Hydrants
H.	AWWA C606	Grooved and Shouldered Joints
I.	AWWA D648	Standard Test Method for Deflection Temperature of Plastics Under Flexural Load
J.	NEMA MG1	Motors and Generators

1.3 SUBMITTALS

A. Product Data:
   1. Valves, include: pressure and temperature rating, material of construction, special linings, dimensions and weight, flow coefficient, wiring and control diagrams for electric or cylinder actuators.
B. Quality Assurance/Control Submittals:
   1. Test Reports:
      a. Valves
         1) Manufacturer factory tests
   2. Certificates:
      a. For butterfly valves 8 inches and larger, furnish “Affidavit of Compliance” with Owner in accordance with AWWA C504
      b. Acknowledgement that products submitted meet requirements of standards referenced.
   3. Manufacturer’s Instructions:
      a. Valve installation
C. Installation, Operation and Maintenance Manuals:
   1. Butterfly valves
   2. Ball valves
   3. Calibrated Balance Valve
   4. Actuators
   5. Auxiliary items

PART 2 PRODUCTS

2.1 ACCEPTABLE MANUFACTURERS

A. Subject to compliance with the Contract Documents, the following manufacturers are acceptable:
   1. Butterfly Valves:
      a. DeZurik
      b. Keystone
      c. Pratt
      d. Or Approved Equal
   2. Ball Valves:
      a. Chemtrol
      b. Harrington
      c. ASAHI/America
      d. Or Approved Equal
   3. Calibrated Balance Valve:
      a. ITT Bell & Gossett
      b. Or Approved Equal
   4. Electric Actuators
      a. EIM
      b. Rotork
      c. Limitorque
      d. Keystone
      e. Or Approved equal

2.2 MATERIALS

A. Butterfly Valves (AWWA C504):
   1. Valve bodies:
      a. ASTM A126, Class B or ASTM A536 Grade 65-45-12 ductile iron
      b. Wafer valves may be constructed of ASTM A48, Class 40 cast iron
   2. Valve shafts:
      a. Stainless steel, 18-8, Type 316
   3. Valve discs:
      a. ASTM A436, Type 1 alloy cast iron
      b. ASTM A536, Grade 65-45-12 ductile iron
      c. ASTM A436, Type 1 alloy cast iron
      d. Bronze in accordance with AWWA C504
   4. Valve seats:
      a. Buna-N
   5. Mating surfaces:
      a. Valves less than 30 IN: ASTM A276, 18-8, stainless steel or bronze
B. Ball Valves:
   1. Body, stem, ball, handle, end connectors:
      a. PVC or CPVC to match piping system
   2. Ball Seat: Teflon
   3. O-rings: To match piping system
C. Calibrated Balancing Valve:
   1. Valve body: Cast Iron
   2. Ball: Brass

3. Seat Rings: Glass and carbon filled TFE
4. Readout valves: Brass with EPT check valve
5. Stem "O" Ring: EPDM

2.3 DESIGN REQUIREMENTS

A. Butterfly Valves:
1. Seat type: Resilient. Comply with AWWA C504
2. Exposed and submerged valves 3 through 20 IN
   a. Body type: Wafer or short body flange (laying length may vary from AWWA C504)
   b. Equip wafer type with fully tapped anchor lugs drilled per ANSI B16.5
3. Exposed and submerged valves 24 IN and larger:
   a. Body type: Short body flange
   b. Working pressure: Rated for 150 psi (Class 150B per AWWA C504)
4. Direct buried valves:
   a. All valves: Working pressure rated for 150 psi (Class 150B per AWWA C504)

B. Ball Valves:
1. Rated at 150 psi at 75 degrees F.
2. Double or "true union" design
3. Blocks both directions, upstream and downstream
4. Union nut capable of compensating for seat wear
5. Body with mounting pad for actuators where required
6. Capable of being disconnected at downstream end under full line pressure
7. Valve shaft to be reinforced with steel shaft

C. Calibrating Balancing Valve:
1. Rated at 175 psig at 250 degrees F
2. Valves to be designed to allow installing contractor to pre-set balance points for proportional system balance prior to system start up in accordance with pre-set balance schedule.
3. Equipped with capped readout valve fitted with internal check valve
4. Include a ¼" NPT tapped and plugged drain port as standard
5. 125 psi ANSI flange 3" connection

2.4 VALVE ACTUATORS

A. Valve Actuators - General:
1. Provide actuators as indicated or specified
2. Counter clockwise opening as viewed from the top
3. Direction of opening and the word "OPEN" to be cast in handwheel or valve bonnet
4. Size actuator to produce required torque with a maximum pull of 80 pounds at the maximum pressure rating of the valve provided and withstand without damage a pull of 200 pounds on handwheel or chainwheel or 300 foot-pounds torque on the operating nut.
5. Extension Stem:
   a. Install where indicated or specified
   b. Solid steel with actuator key and nut, diameter not less than stem of valve actuator shaft
   c. Pin all stem connections
   d. Center in valve box or grating opening band with guide bushing

B. Exposed Valve Manual Actuators:
1. Provide for all exposed valves not having electric or cylinder actuators

2. Provide lever actuators for butterfly valves and ball valves 3 inch diameter and smaller
   a. Lever actuators for butterfly valves shall have a minimum of 5 intermediate lock positions between full open and full close
   b. Provide at least two levers for each type and size of valve furnished
3. Gear actuators required for butterfly valves and ball valves 4 inch diameter and larger
4. Provide gearing for gate valves 20 inch and larger in accordance with AWWA C500
5. Gear actuators to be totally enclosed, permanently lubricated and with sealed bearings
6. Provide chain actuators for valves 6 feet or higher from finish floor to valve centerline
   a. Cadmium-plated chain looped to within 3 feet of finish floor
   b. Equip chain wheels with chain guides to permit rapid operation with reasonable side pull without "gagging" the wheel

C. Electric Actuators (120 V, 1 phase as scheduled):
1. Provide electric valve actuator with integral control devices and provisions for remote control.
2. Furnish electric actuator integral with valve consisting of:
   a. Motor.
   b. Gearing.
   c. Manual handwheel.
   d. Limit and torque switches.
   e. Lubricants.
   f. Heating elements.
   g. Wiring.
   h. Terminals for motor power and controls.
   i. Drive nut.
   j. Local controls.
3. Housing/Enclosure:
   a. Provide cast iron gear housing and cast iron load bearing enclosure.
   b. Nonload bearing enclosure and housing: aluminum or cast iron.
   c. Rated for area classification indicated.
   d. Provide O-ring seals for covers and entries.
   e. Terminal and limit switch compartment covers are to be fastened to gear housing by stainless steel fasteners with capture device to prevent loss.
4. Motors:
   a. Provide motors that are totally enclosed, high torque design made expressly for valve actuator service and capable of operating the valve under full differential pressure for complete open-close and reverse cycle of travel at least twice in immediate succession without overheating.
   b. Design motors in accordance with NEMA MG1 standards, with Class B insulation, and to operate successfully at any voltage within 10 percent above or below rated voltage.
   c. Provide positive method to ensure motor bearings are permanently lubricated.
   d. Motor housing:
      1) Aluminum or cast iron.
      2) Totally enclosed nonventilated with cooling fins.
   e. Provide motor capable of operating in any position.
   f. Provide motor sealed from gearcase to allow any mounting position.
   g. Provide motors suitable for 120 V, 1 phase, 60 Hz as scheduled.

5. Gearing:
    a. Provide power gearing consisting of heat treated steel helical gears, carburized and hardened alloy steel worm, and alloy bronze worm gear, all grease or oil bath lubricated, designed for 100 percent overload, and effectively sealed against entrance of foreign matter.
    b. Provide gearing mechanism constructed to permit field changes of reduction gear ratio.
    c. Design actuators so that motor comes up to speed before stem load is encountered in either opening or closing operation.
    d. Limit switch gearings and feedback device reduction gearing:
        1) Steel or bronze.
    e. Support rotating shafts with anti-friction bearings.
    f. Provide separate drive nut/thrust bearing assembly:
        1) Mounted to base of actuator.
        2) High tensile bronze.
        3) Quarter turn actuator: Provide 90 degree mounting intervals.
        4) Provide grease fitting on drive assembly.
6. Handwheel:
    a. Permanently attached for manual operation.
    b. Positive declutch mechanism to engage and disengage handwheel.
    c. Handwheel shall not rotate during motor operation.
    d. Inoperable motor shall not prevent manual operation.
7. Limit torque and thrust loads in both closing and opening directions by torque limit switches.
    a. Provide torque switches with micrometer adjustment and reference setting indicator. Assure adjustment variation of approximately 40 percent in torque setting.
    b. Provide switches having rating of not less than 6 A at 120 VAC and 2.2 A at 115 VDC.
    c. Limit and torque switches shall have totally sealed contacts.
8. Furnish electric actuator with geared limit switch assemblies:
    a. Assure each limit switch assembly is geared to driving mechanism and is independently adjustable to trip at any point at and between the fully open and fully closed valve position.
    b. Provide minimum of two normally open contacts and two normally closed contacts at each end of valve travel.
    c. Provide switches with inductive contact rating of not less than 6 A at 120 VAC, 3 A at 240 VAC, 1.5 A at 480 VAC, 2.2 A at 115 VDC and 1.1 A at 230 VDC.
    d. Limit switches shall be fully adjustable when power is applied to actuator.
9. Provide space heating elements sized to prevent condensation in both motor and geared limit switch compartment(s).
    a. Furnish heating elements rated at 120 VAC with heaters continuously energized.
10. Open-close actuator controls:
    a. Provide control assembly with necessary holding relays, reversing starter, control transformers of sufficient capacity to provide control power, space heating element power and valve position transmitter.
    b. Provide control assembly in an enclosure rated for the defined area classification.
    c. Controls for open/close actuator:
        1) Provide prewired watertight control station with:

(a) Open pushbutton.
(b) Close pushbutton.
(c) Stop pushbutton.
(d) Remote/local switch.
(e) Full open light.
(f) Full close light.

2) Provide spare isolated contact to close with local-remote switch in remote position.
3) Wire all components to an internal terminal strip and include mounted wiring diagram inside enclosure.

11. Additional requirements for modulating valve actuators:
    a. Proportional position servo-amplifier mounted integral with the actuator control compartment.
    b. Positioning of valve shall be proportional to a 4-20 mA signal input to the position servo-amplifier when remote control has been selected.
    c. Servo-amplifier adjustments shall include zero, span, gain, and dead-band.
    d. Provide 4-20 mA output signal proportional to actual valve position.
    e. Provide isolated contact to close with local-remote switch in remote.
    f. Deadband, adjustable down to 1% to 7%.
    g. Rated for 600 starts per hour.

2.5 FABRICATION

A. End Connections:
    1. Comply with the following standards:
        a. Threaded: ANSI B1.20.1
        b. Flanged: ANSI B16.1 Class 125 unless otherwise noted or AWWA C207
        c. Bell and spigot or mechanical (gland) type: AWWA C111
        d. Soldered: ANSI B16.18
        e. Grooved: Rigid joints per Table 5 of AWWA C606
B. Nuts, Bolts, and Washers:
    1. Wetted or internal to be bronze or stainless steel. Exposed shall be zinc or cadmium plated
C. On Insulated Piping: Provide valves with extended stems to permit proper insulation application without interference from handle.
D. Epoxy Interior Coating:
    1. Provide epoxy interior coating for all ferrous surfaces in accordance with AWWA C550

PART 3 EXECUTION

3.1 INSTALLATION

A. Install products in accordance with manufacturer's instructions.
B. Support exposed valves and piping adjacent to valves independently to eliminate pipe loads being transferred to valve and valve loads being transferred to the piping.
C. For ground coupling valves, install rigid type couplings or provide separate support to prevent rotation of valve from installed position.
D. Install electric or cylinder actuators above or horizontally adjacent to valve and gear box to optimize access to controls and external handwheel.

E. For threaded valves, provide union on one side within 2 feet of valve to allow valve removal.
F. Install valves accessible for operation, inspection, and maintenance.

3.2 ADJUSTING

A. Adjust valves, actuators and appurtenant equipment. Operate valve, open and close at system pressures.

END OF SECTION

SECTION 15795

RECYCLED WATER PIPE SUPPORT SYSTEMS

PART 1 GENERAL

1.1 SUMMARY

A. Section Includes:
   1. Pipe support and anchor systems

1.2 REFERENCES

A.	ANSI B31.3	Chemical Plant and Petroleum Refinery Piping
B.	ASTM A36	Standard Specification for Carbon Structural Steel
C.	ASTM A575	Standard Specification for Steel Bars, Carbon, Merchant Quality, M-Grades
D.	ASTM A576	Standard Specification for Steel Bars, Hot-Wrought, Special Quality
E.	AWS D1.1	Structural Welding Code Steel
F.	MSS SP-58	Pipe Hangers and Supports - Materials, Design and Manufacture
G.	MSS SP-69	Pipe Hangers and Supports - Selection and Application

1.3 SUBMITTALS

A. Product Data:
   1. Acknowledgement that products submitted meet requirements of standards referenced.
   2. Itemized list of wall sleeves, anchors, support devices and all other items related to pipe support system.
B. Shop Drawings:
   1. Scale drawings showing guides, hangers, supports, anchors, structural members and appurtenances to describe the pipe support system.
C. Quality Assurance/Control Submittals:
   1. Manufacturer's Instructions:
      a. Pipe support installation

1.4 SYSTEM DESCRIPTION

A. Use existing pipe support systems where applicable to meet requirements of this Section 15795.
B. Install pipe support systems on all piping per this Section 15795 where existing pipe support systems do not meet the requirements of this Section 15795. Pipe supports may not be specifically detailed.

PART 2 PRODUCTS

2.1 ACCEPTABLE MANUFACTURERS

A. Subject to compliance with the Contract Documents, the following manufacturers are acceptable:
   1. ANVIL International, Inc.
   2. Piping Technology and Products
   3. Or Approved Equal

2.2 MANUFACTURED UNITS

A. Hanger Rods:
   1. Material:
      a. ASTM A36
      b. ASTM A575, Grade M1020
      c. ASTM A576, Grade 1020
      d. Minimum allowable tensile stress of 12,000 psi at 650 DegF per MSS-SP-58.
   2. Continuously threaded
   3. Electro-galvanized or cadmium plated after threads are cut
   4. Load limit:

NOMINAL ROD DIAMETER	MAXIMUM SAFE LOAD, (LBS)
3/8 IN DIA (min)	610
1/2 IN DIA	1,130
5/8 IN DIA	1,810
3/4 IN DIA	2,710
7/8 IN DIA	3,770
1 IN DIA	4,960

B. Hangers:
   1. Use existing hangers where appropriate
   2. Hangers for use other than directly on copper pipe: Cadmium plated or galvanized
   3. Hanger type schedule:

APPLICATION	PIPE SIZE	HANGER TYPE
All except noted	4 inches & less	MSS SP-69 Type 11 with MSS SP-69 Type 15, similar to ANVIL Figure 108 with Figure 114
All except noted	Over 4 inches	MSS SP-69 Type 1, similar to ANVIL Figure 590

C. Concrete Inserts for Hanger Rods:
   1. Continuous slots: Unistrut #P1000
   2. Individual inserts: MSS SP-69 Type 18, similar to ANVIL Figure 281
   3. Self-drilling expansion anchors: Phillips flush-end or snap-off end type
D. Beam Clamps for Hanger Rods:
   1. Standard duty
   2. MSS SP-69 Type 21, similar to ANVIL Figure 134
E. Trapeze Hangers for Suspended Piping:
   1. Material: Steel
   2. Galvanized
   3. Angles, channels, or other structural shapes
   4. Curved roller surfaces at support point corresponding with type of hanger required
F. Vertical Pipe Supports:
   1. At base of riser
   2. Lateral movement:
      a. Clamps or brackets:
         1) Similar to ANVIL Figure 103 unless otherwise indicated

G. Pipe Support Saddle:
   1. For pipe located 3 feet or less from floor elevation, except as otherwise indicated
   2. MSS SP-69 Type 38, similar to ANVIL Figure 264
H. Pipe Support Risers:
   1. Schedule 40 pipe
   2. 304 L stainless steel for exterior installations
   3. Galvanized
   4. As recommended by saddle manufacturer
I. Pipe Support Base Plate:
   1. 4 inch larger than support
   2. Collar 3/16 inch thickness, circular in shape, and sleeve type connection to pipe
   3. Collar fitted over outside of support pipe and extended 2 inch from floor plate
   4. Collar welded to floor plate
   5. Edges ground smooth
   6. Assembly hot dipped galvanized after fabrication
J. Pipe Covering Protection Saddle:
   1. For insulated pipe at point of support
   2. MSS SP-69 Type 40, similar to ANVIL Figure 167, Type B
K. Wall Brackets:
   1. For pipe located near walls and 8 foot or more above floor elevation or as otherwise indicated.
   2. MSS SP-69 Type 33, similar to ANVIL Figure 199.
L. Pipe Anchors:
   1. For locations indicated.
   2. 1/4 inch steel plate construction.
   3. Hot dipped galvanized after fabrication.
   4. Designed to prevent movement of pipe at point of attachment.

2.3 DESIGN REQUIREMENTS

A. Supports capable of supporting the pipe for all service and testing conditions.
   1. Provide 5 to 1 safety factor
B. Allow free expansion and contraction of the piping to prevent excessive stress resulting from service and testing conditions or from weight transferred from the piping or attached equipment.
C. Design supports and hangers to allow for proper pitch of pipes.
D. Check all physical clearances between piping, support system and structure.
   1. Provide for vertical adjustment after erection
E. Support vertical pipe runs in pipe chases at base of riser. Support pipes for lateral movement with clamps or brackets.
F. Place hangers on outside of pipe insulation. Use a pipe covering protection saddle for insulated pipe at support point.
G. Provide 20 gauge galvanized steel pipe saddle for fiberglass and plastic support points to ensure minimum contact width of 4 inches.
H. Pipe Support Spacing:
   1. General:
      a. Locate pipe supports at maximum spacing scheduled unless otherwise indicated.
      b. Provide at least one support for each length of pipe at each change of direction and at each valve

2. Steel, stainless steel, cast-iron pipe support schedule:

PIPE SIZES – IN	MAXIMUM SPAN - FT
1-1/2 and less	5
2 thru 4	10
5 thru 8	15
10 and greater	20

3. Support each length and every fitting:
   a. Bell and spigot piping:
      1) At least one hanger
      2) Applied at bell
   b. Mechanical coupling joints:
      1) Place hanger within 2 feet of each side of fittings to keep pipes in alignment

PART 3 EXECUTION

3.1 INSTALLATION

A. Provide piping systems exhibiting pulsation, vibration, swaying, or impact with suitable constraints to correct the condition.
   1. Included in this requirement are movements from:
      a. Trap discharge
      b. Water hammer
      c. Similar internal forces
B. Weld Supports:
   1. AWS D1.1
   2. Weld anchors to pipe in accordance with ANSI B31.3
C. Locate piping and pipe supports as to not interfere with open accesses, walkways, platforms, and with maintenance or disassembly of equipment.
D. Inspect hangers for:
   1. Design offset
   2. Adequacy of clearance for piping and supports in the hot and cold positions
   3. Guides to permit movement without binding
   4. Adequacy of anchors
E. Inspect hangers after erection of piping systems and prior to pipe testing and flushing.
F. Install individual or continuous slot concrete inserts for use with hangers for piping and equipment.
   1. Install concrete inserts as concrete forms are installed
G. Welding:
   1. Welding rods: ASTM and AWS standards
   2. Integral attachments:
      a. Include welded-on ears, shoes, plates and angle clips
      b. Ensure material for integral attachments is of good weldable quality
   3. Preheating, welding and postheat treating: ANSI B31.3, Chapter V

END OF SECTION

SECTION 15815

DUCTWORK AND ACCESSORIES

PART 1 GENERAL

1.1 SUMMARY:

A. Section Includes:

1. Round Ductwork
2. Rectangular Ductwork
3. Metal ductwork
4. Duct test holes
5. Flexible duct connections
6. Dampers
7. Duct Smoke Detectors
8. Diffusers and grilles
9. Louvers
10. Duct Hangers and Supports

1.2 REFERENCES

A. AMCA Publication 511 – Certified Ratings Program for Air Control Devices

B. ASTM A36 – Standard Specification for Carbon Structural Steel

C. ASTM A90 – Standard Test Method for Weight [Mass] of Iron and Steel Articles with Zinc or Zinc Alloy Coatings.

D. ASTM A492 – Standard Specification for Stainless Steel Rope Wire

E. ASTM A575 - Standard Specification for Steel Bars, Carbon, Merchant Quality, M Grades

F. ASTM A603 -Standard Specification for Zinc Coated Steel Structural Wire Rope

G. NPFA 90A – Installation of Air Conditioning and Ventilating Systems.

H. SMACNA 2009, HVAC Duct Construction Standards - Metal and Flexible.

I. UL 555 &555S

1.3 SUBMITTALS

A. Product Data:

1. Duct materials and duct connectors.
2. Diffusers and grilles: performance, size, finish, and type of mounting.
3. Fire Dampers
4. Louvers

PART 2 MATERIALS

2.1 MANUFACTURERS

A. Round Duct

1. McGill AirFlow LLC.
2. SEMCO Incorporated.
3. Spiral Manufacturing Co., Inc.
4. Or Approved Equal

B. Rectangular Duct

1. Aeroflex by Owens-Corning Fiberglass Corp.
2. Linacoustic by Schuller Corp.
3. Ultralite by CertainTeed Corporation.
4. Or Approved Equal

C. Fire/Smoke Dampers

1. Pottorff
2. Ruskin Company
3. Greenheck Fan Corporation
4. Or Approved Equal

D. Duct Smoke Detectors

1. Pottorff
2. Ruskin Company
3. Air Products and Controls, Inc.
4. Or Approved Equal

E. Balancing Dampers, Diffusers, Grilles, and Registers

1. Krueger
2. Shoemaker
3. Metalaire
4. Or Approved Equal

F. Louver

1. Pottorff
2. Titus
3. Metalaire
4. Or Approved Equal

2.2 ROUND DUCTS AND FITTINGS

A. Duct Sizes are as indicated. For lined ducts, maintain sizes inside lining.

B. General Insulation Requirements: Comply with Building Energy Efficiency Standards Section 124 and the CMC Chapter 6, Section 605.0.

C. Environmental Air Ducts shall be per CMC Chapter 5, Universal Building Code 1202 and Energy Efficiency Standards Section 121.

D. General Fabrication Requirements: Comply with SMACNA 2009, Chapter 3, Round, Oval, and Flexible Duct, based on indicated static-pressure class unless otherwise indicated.

E. Transverse Joints: Select joint types and fabricate according to SMACNA 2009, Figure 3-2, Transverse Joints - Round Duct, for static-pressure class, applicable sealing requirements, materials involved, duct-support intervals, and other provisions in SMACNA 2009.

F. Longitudinal Seams: Select seam types and fabricate according to SMACNA 2009, Figure 3-1, Seams - Round Duct and Fittings, for static-pressure class, applicable sealing requirements, materials involved, duct-support intervals, and other provisions in SMACNA 2009.

G. Tees and Laterals: Select types and fabricate according to SMACNA 2009 Figure 3-4, "90 Degree Tees and Laterals," and Figure 3-5, "Conical Tees," for static-pressure class, applicable sealing requirements, materials involved, duct-support intervals, and other provisions in SMACNA 2009.

2.3 METAL DUCTWORK

A. Galvanized Steel Ducts: ASTM A525 and ASTM A527 galvanized sheet, lock-forming quality, having G90 zinc coating in conformance with ASTM A90.

B. Fasteners: Rivets, bolts or sheet metal screws.

C. Sealant: All rigid ductwork shall be sealed airtight with mastic or other approved materials.

D. Hanger Rod: ASTM A36; continuously threaded.

E. No duct tape is approved for rigid duct use.

2.4 DUCTWORK FABRICATION

A. Fabricate and support in accordance with SMACNA 2009 for 2” w.g. pressure class. Provide duct material, gages, reinforcing, and sealing for operating pressures indicated.

B. Construct T’s, bends, and elbows with radius of not less than 1-1/2 times width of duct on centerline. Where not possible and where rectangular elbows are used, provide air foil

turning vanes. Where acoustical lining is indicated, provide turning vanes of perforated metal with glass fiber insulation.

C. Duct transitions shall not exceed 15 degrees; maximum of 30 degrees divergence upstream of equipment and 45 degrees convergence downstream.

D. Fabricate continuously welded round duct fittings two gages heavier than duct gages indicated in SMACNA 2009. Joints shall be minimum 4 inch cemented slip joint or brazed. Prime coat welded joints.

E. Provide standard 45 degree lateral wye takeoffs unless otherwise indicated where 90 degree conical tee connection may be used.

F. Round supply ductwork shall be of the same material, gauges, and construction as that indicated for 4 inch pressure class ductwork.

1. Provide 20 gauge minimum for ductwork exposed within occupied spaces.

G. Supply and return ducts shall be insulated to achieve the minimum thermal (R) value as set forth in CMC Table 6-6.

2.5 RECTANGULAR DUCTWORK MATERIALS

A. Duct Sizes are as indicated. For lined ducts, maintain sizes inside lining.

B. Internal duct lining:

1. Provide internal duct lining in all supply and return air plenums and rigid duct connected to all Heat Pumps.

a. Where not exposed to weather, lining may be 1 inch thick, with R value of 4.2 minimum.
b. In unconditioned spaces, lining shall be 2 inch thick, with R value of 8.0 minimum.

2. Duct liner and adhesive shall not exceed flame spread rating of 25 and smoke development rating of 50, all in conformance with CMC requirements.

C. Ductwork Support Materials: Except as otherwise indicated, provide hot-dipped galvanized steel fasteners, anchors, rods, straps, trim and angles for support of ductwork.

2.6 DUCT TEST HOLES

A. Temporary Test Holes: Cut or drill in ducts as required. Cap with neat patches, neoprene plugs, threaded plugs, or threaded or twist on metal caps.

B. Permanent Test Holes: Factory fabricated airtight flanged fittings with screw cap. Provide extended neck fittings to clear insulation.

2.7 FLEXIBLE DUCT CONNECTIONS

A. Fabricate in accordance with SMACNA 2009.

B. Connector: Fabric crimped into metal edging strip.

1. Fabric: UL listed fire-retardant neoprene coated woven glass fiber fabric to NFPA 90A.
2. Net Fabric Width: Approximately 2 inches wide.
3. Metal: 3 inches wide, galvanized steel.

C. Leaded Vinyl Sheet: Minimum 0.55 inch thick, 0.87 lb per sq ft, 10 dB attenuation in 10 to 10,000 Hz range.

2.8 DAMPERS

A. Construct dampers with galvanized sheet metal two gauges heavier than duct in which installed.

B. Except as modified herein, the construction shall be of aluminum or galvanized steel with interlocking edges and maximum 10 inch blade width.

C. Blades:

1. Opposed-blade type.
2. Connect to the damper frame with the non-metallic anti-friction bushing.
3. Connect to the frame with a galvanized zinc coated steel anti-friction bearing pin.

a. The pin shall consist of a ball bearing, lubricated for life with a full stroke test of 200,000 or more strokes in accordance with UL 555S. The bearing shall be pressed onto a steel shaft via a knurled stud.

D. Manual Volume Dampers

1. Balancing, factory-fabricated type. Equip dampers with accessible mechanism such as quadrant operators or 3/16 inch roads brought through the side of ducts with locking setscrew and bushing. Where quadrant operators are furnished, Provide chrome plated or enamel painted type with exposed edges rounded.

E. Backdraft Dampers

1. Factory-fabricated with statically balanced blades that open automatically when the fan starts and close by gravity or spring when the fan stops.

F. Fire/Smoke Dampers

1. Factory-fabricated with triple-V blades which are operable by actuator for point-of-origin control of fire and smoke.

2. Damper shall be UL 555 Fire Resistance Rated for 1.5 hours and UL 555S Leakage Class 1 Rated.

3. Frame shall have round duct transitions on either side and shall be ordered to fit the connecting ductwork.

2.9 DUCT SMOKE DETECTORS

A. Factory-fabricated with either Ionization or Photoelectric detection head. Detector shall operate between 100 & 4000 feet per minute and at a maximum temperature of no less than 140 deg F.

2.10 DIFFUSERS AND GRILLES

A. All new 24″x24″ diffusers and grilles shall fit properly within the T-Bar structure. Provide proper frame for diffusers and grilles to be installed in the T-bar structure.

B. All new diffusers and grilles in exposed ductwork or gyp board ceilings shall be integrate per SMACNA and installed per manufacturer.

C. New replacement diffuser in the existing Fleet Center shall fit properly within the acoustic tile ceiling. Provide proper frame for diffuser in this application.

D. Diffusers to come with opposed blade damper.

2.14 LOUVERS

A. Mill finish 6063-T4 extruded aluminium. All new 18″x18″ louvers shall be drainable blade design to prevent water penetration in non-wind-driven rain application by collecting water in frame and blade gutters and channelling it into downspouts and away from airflow path.

B. Frame: 4″ deep x 0.81″ thick channel

C. Blades: 36 deg x 0.081″ thick drainable style.

D. Screen: ½″ x 0.063″ expanded and flattened aluminium.

E. Mullion: visible.

F. Finish: natural, painted to match finishes.

2.11 HANGERS AND SUPPORTS

A. Hanger Rods for Noncorrosive Environments: Cadmium-plated steel rods and nuts.

B. Hanger Rods for Corrosive Environments: Electrogalvanized, all-thread rods or galvanized rods with threads painted with zinc-chromate primer after installation.

C. Strap and Rod Sizes: Comply with SMACNA 2009, Table 4-1, "Rectangular Duct Hangers Minimum Size," and Table 4-2, "Minimum Hanger Sizes for Round Duct."

D. Steel Cables for Galvanized-Steel Ducts: Galvanized steel complying with ASTM A603.

E. Steel Cable End Connections: Cadmium-plated steel assemblies with brackets, swivel, and bolts designed for duct hanger service; with an automatic-locking and clamping device.

F. Duct Attachments: Sheet metal screws, blind rivets, or self-tapping metal screws; compatible with duct materials.

G. Trapeze and Riser Supports:

1. Supports for Galvanized-Steel Ducts: Galvanized-steel shapes and plates.

PART 3 EXECUTION

3.1 INSTALLATION

A. Install in accordance with manufacturer's instructions.

B. Install and seal ducts in accordance with SMACNA 2009.

C. Install diffusers, registers and grilles level and plumb.

D. Ceiling Mounted Outlets and Inlets: Drawings indicate general arrangement of ducts, fittings, and accessories. Air outlet and inlet locations have been indicated to achieve design requirements for air volume, noise criteria, airflow patters, throw and pressure drop. Make final locations where indicated, as much as practical.

E. Provide openings in ductwork where required to accommodate thermometers and controllers for testing. Provide Pitot tube openings where required for testing of systems, complete with metal can with spring device or screw to ensure against air leakage. Where openings are provided in insulated ductwork, install insulation material inside a metal ring.

F. Locate ducts with sufficient space around equipment to allow normal operating and maintenance activities.

G. Use double nuts and lock washers on threaded rod supports. Connect flexible duct to metal ducts with nylon strap, adhesive and tape.

H. During construction, provide temporary closures of metal or taped polyethylene on open ductwork to prevent construction dust from entering ductwork system.

I. Install accessories in accordance with manufacturer's instructions, NFPA 90A, and follow SMACNA 2009.

J. Provide flexible connections immediately adjacent to equipment in ducts associated with fans and motorized equipment.

K. Provide balancing dampers at points on supply, return, and exhaust systems where branches are taken from lager ducts as required for air balancing. Install minimum of 2 duct widths from duct take-off.

L. Provide balancing dampers on duct take-off to diffusers, grilles, and registers.

M. Install diffusers in accordance with manufacturer's instructions.

N. Check location of outlets and inlets and make necessary adjustments in position to conform to architectural features, symmetry and lighting arrangement.

O. Install diffusers to ductwork with airtight connection.

P. All exterior wall and roof penetrations shall be flashed and counterflashed as required to seal weathertight.

Q. Smoke Detectors:

1. Install in the supply plenum of all Heat Pumps per CMC 609.
2. Install within 5 feet of any Fire/Smoke Damper indicated, per local code, and per Fire Marshal.
3. Wire to the Heat Pump and the Fire Control System in a way that disengages the Heat Pump and alerts the Fire Control System if smoke is detected.

R. Fire/Smoke Dampers:

1. Install as indicated, per local code, and per Fire Marshal.
2. Construct of approved materials with permanent identification labels.
3. Maintain access for inspection.
4. Insert slotted dowel pin through the hole connecting the two pins for blade to frame connection.

S. Penetrations through fire rated assemblies:

1. Fire stop and seal with a materials that meets or exceeds the "T" rating of the assembly penetrated.
2. Cement duct liner in place with nonflammable, non-hardening duct adhesive. Seal all raw edges of insulation inside ductwork with adhesive.

T. Provide sheet metal weld pins and washers for clinch pins and washers on all ductwork on 12 inch intervals with the first row within 3 inches of the leading edge of each piece of insulation and within 4 inches of corners. No use of adhesive mounted pins will be considered.

U. Install clinched pin fasteners with properly adjusted automatic fastening equipment. Manual installation will not be considered.

V. Install weld pins with properly adjusted automatic fastening equipment. Installation shall not damage the galvanized coating on the outside of the duct.

END OF SECTION

SECTION 15838

POWER VENTILATORS

PART 1 - GENERAL

1.1 SUMMARY

A. Section Includes:

1. Ceiling-mounted ventilators.
2. In-line centrifugal fans.
3. Fan-coil units.

1.2 PERFORMANCE REQUIREMENTS

A. Project Altitude: Base fan-performance ratings on sea level.

B. Operating Limits: Classify according to AMCA 99.

1.3 ACTION SUBMITTALS

A. Product Data: For each type of product indicated. Include rated capacities, operating characteristics, and furnished specialties and accessories. Also include the following:

1. Certified fan performance curves with system operating conditions indicated.
2. Certified fan sound-power ratings.
3. Motor ratings and electrical characteristics, plus motor and electrical accessories.
4. Material thickness and finishes, including color charts.
5. Dampers, including housings, linkages, and operators.
6. Fan speed controllers.

1.4 CLOSEOUT SUBMITTALS

A. Operation and Maintenance Data: For power ventilators to include in emergency, operation, and maintenance manuals.

1.5 QUALITY ASSURANCE

A. Electrical Components, Devices, and Accessories: Listed and labeled as defined in NFPA 70, by a qualified testing agency, and marked for intended location and application.

B. AMCA Compliance: Fans shall have AMCA-Certified performance ratings and shall bear the AMCA-Certified Ratings Seal.

C. UL Standards: Power ventilators shall comply with UL 705.

1.6 COORDINATION

A. Coordinate size and location of structural-steel support members.

B. Coordinate sizes and locations of roof curbs, equipment supports, and roof penetrations with actual equipment provided.

PART 2 - PRODUCTS

2.1 CEILING-MOUNTED VENTILATORS

A. Manufacturers:

1. Broan-NuTone LLC.
2. Greenheck Fan Corporation.
3. PennBarry.
4. Panasonic.
5. Or Approved Equal.

B. Housing: Steel, lined with acoustical insulation.

C. Fan Wheel: Centrifugal wheels directly mounted on motor shaft. Fan shrouds, motor, and fan wheel shall be removable for service.

D. Grille: Plastic, louvered grille with flange on intake and thumbscrew attachment to fan housing.

E. Electrical Requirements: Junction box for electrical connection on housing and receptacle for motor plug-in.

F. Accessories:

1. Variable-Speed Controller: Solid-state control to reduce speed from 100 to less than 50 percent.
2. Manual Starter Switch: Single-pole rocker switch assembly with cover and pilot light.
3. Manufacturer's standard roof jack or wall cap and transition fittings.

2.2 IN-LINE CENTRIFUGAL FANS

A. Manufacturers:

1. Greenheck Fan Corporation.
2. PennBarry.
3. Panasonic.
4. Or Approved Equal.

B. Housing: Split, spun aluminum with aluminum straightening vanes, inlet and outlet flanges, and support bracket adaptable to floor, side wall, or ceiling mounting.

C. Direct-Drive Units: Motor mounted in airstream, factory wired to disconnect switch located on outside of fan housing.

D. Fan Wheels: Aluminum, airfoil blades welded to aluminum hub.

E. Accessories:

1. Variable-Speed Controller: Solid-state control to reduce speed from 100 to less than 50 percent.
2. Volume-Control Damper: Manually operated with quadrant lock, located in fan outlet.
3. Companion Flanges: For inlet and outlet duct connections.
4. Fan Guards: 1/2- by 1-inch mesh of galvanized steel in removable frame. Provide guard for inlet or outlet for units not connected to ductwork.

2.3 FAN COIL UNIT

A. Manufacturers
1. Trane
2. Nailor
3. Or Approved Equal

B. Horizontal Cabinet Base Construction: The basic unit shall include a chassis, coil, fan wheel, fan casing, fan board and motors and a positively sloped (multi-plane), non-corrosive main drain with closed cell insulation. Provide thermoplastic auxiliary drain pan. Fan board assembly and both drain pans are to be removable. The fan board assembly to include a quick disconnect motor plug. The chassis structural frame shall be constructed of 18ga. galvanized steel, acoustically and thermally insulated with closed cell insulation. The bottom panel shall be fabricated from 16 ga. galvanized steel. All other panels shall be fabricated from 18 ga. galvanized steel. Side panels shall be removable for piping access. The hinged access door shall be flush with the unit.

C. Unit Flush: All cabinets shall be cleaned, bonderized, phosphatized and painted with one of six decorator colors. Standard finish to meet ASTM B117 specifications (salt spray test).

D. Fan: The galvanized steel fan wheel shall be centrifugal forward-curved and double-width. Fan wheels and housings shall be corrosion resistant. Fan housings shall be constructed of formed sheet metal.

E. Coil: All water coils shall be burst tested at 450 PSIG (air) and leak tested at 100 PSIG (air under water). Maximum main coil working pressure shall be 300 PSIG. Maximum entering water temperature shall be 200 degrees F (93 degrees C). Tubes and U-bends shall be 3/8″ (10 mm) O.D. copper. Fins to be aluminum and shall be mechanically bonded to the copper tubes. Fan coil connections shall be 5/8″ (16 mm) O.D. copper tubing.

1. Recycled water from the Waste Water Treatment Plant will be used instead of chilled water. The water will be used after the A-7 Post Microfiltration process at the Plant. Recycled water samples identify the following properties:

a.	Calcium	30 mg/l
b.	Iron	ND (not detected)
c.	Magnesium	18 mg/l
d.	Bicarbonate Alkalinity as CaCO3	120 mg/l
e.	Carbonate Alkalinity as CaCO3	ND
f.	Hydroxide Alkalinity as CaCO3	ND
g.	Residual Chlorine	2.1 mg/l
h.	Total Alkalinity as CaCO3	120 mg/l
i.	Ammonia as NH3	7.2 mg/l
j.	Carbon Dioxide, Free	20 mg/l
k.	Hardness, Total	148 mg/l
l.	Hydroxide	ND
m.	pH	7.09
n.	Total Dissolved Solids	230 mg/l
o.	Total Suspended Solids	ND
p.	Langelier Index	-0.87

F. Thermostat:

1. Fan speed control
2. Fan on-auto switch.
3. Exposed temperature set point.
4. Exposed temperature indication.
5. Deg F indication.
6. Occupancy Sensor with “short vacancy” and “long vacancy” settings.

G. Accessories:

1. Front bar grille supply
2. Piping package with 2-way modulating main control valve
3. Manual air vent
4. 1″ throw away filter

2.4 MOTORS

A. Comply with NEMA designation, temperature rating, service factor, enclosure type, and efficiency requirements for motors specified.

1. Motor Sizes: Minimum size as indicated. If not indicated, large enough so driven load will not require motor to operate in service factor range above 1.0.

B. Enclosure Type: Totally enclosed, fan cooled.

2.5 SOURCE QUALITY CONTROL

A. Certify sound-power level ratings according to AMCA 301, "Methods for Calculating Fan Sound Ratings from Laboratory Test Data." Factory test fans according to AMCA 300, "Reverberant Room Method for Sound Testing of Fans." Label fans with the AMCA-Certified Ratings Seal.

B. Certify fan performance ratings, including flow rate, pressure, power, air density, speed of rotation, and efficiency by factory tests according to AMCA 210, "Laboratory Methods of Testing Fans for Aerodynamic Performance Rating." Label fans with the AMCA-Certified Ratings Seal.

PART 3 - EXECUTION

3.1 INSTALLATION

A. Install power ventilators level and plumb.

B. Ceiling Units: Suspend units from structure; use steel wire or metal straps.

C. Support suspended units from structure using threaded steel rods and spring hangers having a static deflection of 1 inch.

D. Install units with clearances for service and maintenance and per manufacturer's instructions.

3.2 CONNECTIONS

A. Drawings indicate general arrangement of ducts and duct accessories. Make final duct connections with flexible connectors. Flexible connectors are specified in Section 15815 (Ductwork and Accessories).

B. Install ducts adjacent to power ventilators to allow service and maintenance.

3.3 FIELD QUALITY CONTROL

A. Perform tests and inspections.

B. Tests and Inspections:

1. Verify that shipping, blocking, and bracing are removed.
2. Verify that unit is secure on mountings and supporting devices and that connections to ducts and electrical components are complete. Verify that proper thermal-overload protection is installed in motors, starters, and disconnect switches.
3. Verify that cleaning and adjusting are complete.
4. Disconnect fan drive from motor, verify proper motor rotation direction, and verify fan wheel free rotation and smooth bearing operation. Reconnect fan drive system, align and adjust belts, and install belt guards.
5. Adjust damper linkages for proper damper operation.
6. Verify lubrication for bearings and other moving parts.
7. Verify that manual and automatic volume control and fire and smoke dampers in connected ductwork systems are in fully open position.
8. Disable automatic temperature-control operators, energize motor and adjust fan to indicated rpm, and measure and record motor voltage and amperage.
9. Shut unit down and reconnect automatic temperature-control operators.
10. Remove and replace malfunctioning units and retest as specified above.

C. Test and adjust controls and safeties. Replace damaged and malfunctioning controls and equipment.

D. Prepare test and inspection reports.

3.4 ADJUSTING

A. Adjust damper linkages for proper damper operation.

B. Adjust flow rate at fan coil unit to match schedule.

C. Comply with requirements in Section 15950 (Testing, Adjusting, and Balancing) for testing, adjusting, and balancing procedures.

D. Replace fan and motor pulleys as required to achieve design airflow.

E. Lubricate bearings.

END OF SECTION

SECTION 15940

MECHANICAL CONTROL SEQUENCE

PART 1 - GENERAL

1.1 SUMMARY

A. Section includes:

1. Water-Source Heat Pumps
2. Fan Coil Unit
3. Motorized Water Valves
4. Exhaust Fans
5. Fire/Smoke Dampers (FSDs)

1.2 WATER SOURCE HEAT PUMP UNIT CONTROL SEQUENCE FOR EXISTING AND NEW SERVICE CENTER BUILDINGS

A. Sequence typical for HP-1 through HP-6, the corresponding thermostats, and the corresponding motorized water valve.

B. Temperature control: The unit shall cycle DX cooling and heating necessary to maintain Set Point as sensed by the corresponding thermostat. Set points for cooling and heating at each zone shall be programmed into each thermostat.

C. 7-day programmable thermostat to come integral with occupancy sensor. Occupancy sensor to come with “short vacancy” setting and “long vacancy” setting.

D. Daytime Operation: To be active during occupied days and hours.

1. Normal condition: All Heat Pumps shall be engaged in fan mode only.

2. When a zone is no longer occupied:

   a. Disengage the Water Source Heat Pump for that zone.

3. Upon call for space cooling or heating by one of the thermostat:

   a. Engage the Water Source Heat Pump for that zone.
   b. Open the corresponding motorized water valve.

4. When the temperature reaches the set point at the thermostats or temperature sensor:

   a. Disengage the Water Source Heat Pump heating/cooling for that zone.
   b. Close the corresponding motorize water valve. Fan to continue operating.

E. Off-hours Operation: Heat pumps shall be off during off-hour and weekends. Heat pumps shall only come on if occupancy is sensed.

1. Normal condition: All Heat Pumps shall be disengaged, motorized water valves closed.

2. One hour before occupied period begins:

a. Engage Water Source Heat Pumps at occupancy sensed-zones where the daytime set point requires cooling or heating.
b. Open the corresponding motorized water valve.

3. Return all equipment to Daytime Operation per a weekly occupancy schedule.

1.6 EXHAUST FAN SEQUENCE

A. Sequence typical for all existing exhaust fans.

B. Bathrooms:

1. To be engaged during occupied hours.

C. Kitchens/Break Rooms:

1. Wall mounted switch engages fan.

D. Electrical Rooms:

1. Exhaust fans connected to a line thermostat.

1.7 FAN COIL UNIT SEQUENCE

A. Fisheries 132 – Daytime Operation

1. Normal condition: Fan Coil shall be disengaged, motorized water valves closed.

2. Unit shall cycle between cooling or fan only as required by occupants. Motorized water valve to be opened in cooling mode only.

3. Temperature sensor to come integral with occupancy sensor. Occupancy sensor to come with “short vacancy” setting and “long vacancy” setting.

B. Fan coil shall be off during off-hour and weekends. Fan coils shall only come on if occupancy is sensed.

1.8 FIRE/SMOKE DAMPER (FSD)

A. Damper Actuation: Duct smoke detector mounted within 5′ of the FSD shall close the FSD if smoke is detected. The Fire Alarm System shall be notified.

B. Interlock with Water Source Heat Pump. End Switch shall monitor the position of FSD's. Upon signal of closed damper from End Switch, disengage the Water Source Heat Pump which supplies air through the FSD.

PART 2 - PRODUCTS (Not Used)

PART 3 - EXECUTION (Not Used)

END OF SECTION

SECTION 15950

TESTING, ADJUSTING, AND BALANCING OF HVAC SYSTEMS

PART 1 - GENERAL

1.1 SUMMARY

A. Section Includes:

1. Balancing Air Systems:

   a. Constant-volume air systems (high speed).

2. Balancing Hydronic Piping Systems:

   a. Variable-flow hydronic systems.

3. Duct Leakage Testing
   a. Existing ductwork associated with HP-4 shall be tested by a HERS rater to ensure duct leakage rate does not exceed 6% of fan flow per CA Energy Efficiency Standards.
   b. All new ductwork shall be tested by a HERS rater to ensure duct leakage rate does not exceed 6% of fan flow energy per CA Energy Efficiency Standards and CalGreen section A5.207.2.5.

1.2 REFERENCES

A. ASHRAE 111, Section 5, "Instrumentation."

1.3 DEFINITIONS

A. NEBB: National Environmental Balancing Bureau.

B. TABB: Testing, Adjusting, and Balancing Bureau.

C. AABC: American Air Balance Council.

1.4 SUBMITTALS

A. Prepare a TAB plan that includes strategies and step-by-step procedures.

B. Final Report

1. General: Prepare a TABB certified written report; tabulate and divide the report into separate sections for tested systems and balanced systems.

   a. Include a certification sheet at the front of the report's binder, signed and sealed by the certified testing and balancing engineer.
   b. Include a list of instruments used for procedures, along with proof of calibration.

2. Final Report Contents: In addition to certified field-report data, include the following:

   a. Pump curves.
   b. Fan curves.
   c. Manufacturers' test data.
   d. Field test reports prepared by system and equipment installers.
   e. Other information relative to equipment performance; do not include Shop Drawings and product data.

3. General Report Data: In addition to form titles and entries, include the following data:

   a. Title page.
   b. Name and address of the TAB contractor.
   c. Project name.
   d. Project location.
   e. Engineer's name and address.
   f. Contractor's name and address.
   g. Report date.
   h. Signature of TAB supervisor who certifies the report.
   i. Table of Contents with the total number of pages defined for each section of the report. Number each page in the report.
   j. Summary of contents including the following:

      1) Indicated versus final performance.
      2) Notable characteristics of systems.
      3) Description of system operation sequence if it varies from the Contract Documents.

   k. Nomenclature sheets for each item of equipment.
   l. Data for heat pumps, and fan coil unit, including manufacturer's name, type, size, and fittings.
   m. Notes to explain why certain final data in the body of reports vary from indicated values.
   n. Test conditions for fans and pump performance forms including the following:

      1) Settings for outdoor air dampers.
      2) Conditions of filters.
      3) Cooling coil, wet- and dry-bulb conditions.
      4) Fan drive settings including settings and percentage of maximum pitch diameter.

5) Other system operating conditions that affect performance.

4. System Diagrams: Include schematic layouts of air and hydronic distribution systems. Present each system with single-line diagram and include the following:

   a. Quantities of outdoor, supply, return, and exhaust airflows.
   b. Water flow rates.
   c. Duct, outlet, and inlet sizes.
   d. Pipe and valve sizes and locations.
   e. Balancing stations.
   f. Position of balancing devices.

5. Heat Pump and Fan Coil Unit Test Reports:

   a. Unit Data:

      1) Unit identification.
      2) Location.
      3) Make and type.
      4) Model number and unit size.
      5) Manufacturer's serial number.
      6) Unit arrangement and class.
      7) Discharge arrangement.
      8) Sheave make, size in inches, and bore.
      9) Center-to-center dimensions of sheave, and amount of adjustments in inches.
      10) Number, make, and size of belts.
      11) Number, type, and size of filters.

   b. Motor Data:

      1) Motor make, and frame type and size.
      2) Horsepower and rpm.
      3) Volts, phase, and hertz.
      4) Full-load amperage and service factor.
      5) Sheave make, size in inches, and bore.
      6) Center-to-center dimensions of sheave, and amount of adjustments in inches.

6. Round and Rectangular Duct Traverse Reports: Include a diagram with a grid representing the duct cross-section and record the following:

   a. Report Data:

      1) System and heat pump, fan coil unit or exhaust fan number.
      2) Location and zone.
      3) Duct static pressure in inches wg.
      4) Duct size in inches.
      5) Indicated air flow rate in cfm.

6) Indicated velocity in fpm.
7) Actual air flow rate in cfm.
8) Actual average velocity in fpm.

7. Base Mounted Pump Test Reports: Calculate impeller size by plotting the shutoff head on pump curves and include the following:

   a. Unit Data:

      1) Unit identification.
      2) Location.
      3) Service.
      4) Make and size.
      5) Model number and serial number.
      6) Water flow rate in gpm.
      7) Water pressure differential in feet of head.
      8) Required net positive suction head in feet of head.
      9) Pump rpm.
      10) Impeller diameter in inches.
      11) Motor make and frame size.
      12) Motor horsepower and rpm.
      13) Voltage at each connection.
      14) Amperage for each phase.
      15) Full-load amperage and service factor.
      16) Seal type.

   b. Test Data (Indicated and Actual Values):

      1) Static head in feet of head.
      2) Pump shutoff pressure in feet of head.
      3) Actual impeller size in inches.
      4) Full-open flow rate in gpm.
      5) Full-open pressure in feet of head.
      6) Final discharge pressure in feet of head.
      7) Final suction pressure in feet of head.
      8) Final total pressure in feet of head.
      9) Final water flow rate in gpm.
      10) Voltage at each connection.
      11) Amperage for each phase.

8. Instrument Calibration Reports:

   a. Report Data:

      1) Instrument type and make.
      2) Serial number.
      3) Application.
      4) Dates of use.
      5) Dates of calibration.

1.5 QUALITY ASSURANCE

A. Contractor Qualifications: Engage a TAB entity certified by AABC or NEBB.

1. TAB Field Supervisor: Employee of the TAB contractor and certified by AABC or NEBB.
2. TAB Technician: Employee of the TAB contractor and who is certified by AABC or NEBB as a TAB technician.

B. Certify TAB field data reports and perform the following:

1. Review field data reports to validate accuracy of data and to prepare certified TAB reports.
2. Certify that the TAB team complied with the approved TAB plan and the procedures specified and referenced in this Specification.

C. Instrumentation Type, Quantity, Accuracy, and Calibration: As described in ASHRAE 111, Section 5, "Instrumentation."

D. Certified TAB reports.

E. Sample report forms.

F. Instrument calibration reports, to include the following:

1. Instrument type and make.
2. Serial number.
3. Application.
4. Dates of use.
5. Dates of calibration.

1.6 PROJECT CONDITIONS

A. Full Owner Occupancy: Owner shall occupy the Site and existing building during entire TAB period. Cooperate with Owner during TAB operations to minimize conflicts with Owner's operations.

1.7 COORDINATION

A. Perform TAB after leakage and pressure tests on air and water distribution systems have been satisfactorily completed.

PART 2 - PRODUCTS (Not Used)

PART 3 - EXECUTION

3.1 EXAMINATION

A. Examine the Contract Documents to become familiar with Project requirements and to discover conditions in systems' designs that may preclude proper TAB of systems and equipment.

B. Examine systems for installed balancing devices, such as test ports, gage cocks, thermometer wells, flow-control devices, balancing valves and fittings, and manual volume dampers. Verify that locations of these balancing devices are accessible.

C. Examine the approved submittals for HVAC systems and equipment.

D. Examine design data including HVAC system descriptions, statements of design assumptions for environmental conditions and systems' output, and assumptions about HVAC system and equipment controls.

E. Examine system and equipment installations and verify that field quality-control testing, cleaning, and adjusting specified in individual Sections have been performed.

F. Examine test reports specified in individual system and equipment Sections.

G. Examine heat pump equipment and filters and verify that bearings are greased, belts are aligned and tight, and equipment with functioning controls is ready for operation.

H. Examine strainers. Verify that startup screens are replaced by permanent screens with indicated perforations.

I. Examine heat-transfer coils for correct piping connections and for clean and straight fins.

J. Examine system pumps to ensure absence of entrained air in the suction piping.

K. Examine operating safety interlocks and controls on HVAC equipment.

L. Report deficiencies discovered before and during performance of TAB procedures. Observe and record system reactions to changes in conditions. Record default set points if different from indicated values.

3.2 PREPARATION

A. Complete system-readiness checks and prepare reports. Verify the following:

1. Permanent electrical-power wiring is complete.
2. Hydronic systems are filled, clean, and free of air.
3. Automatic temperature-control systems are operational.

4. Equipment and duct access doors are securely closed.
5. Balance, smoke, and fire dampers are open.
6. Ceilings are installed in critical areas where air-pattern adjustments are required and access to balancing devices is provided.
7. Windows and doors can be closed so indicated conditions for system operations can be met.

3.3 GENERAL PROCEDURES FOR TESTING AND BALANCING

A. Cut insulation, ducts, pipes, and equipment cabinets for installation of test probes to the minimum extent necessary for TAB procedures.

1. After testing and balancing, patch probe holes in ducts with same material and thickness as used to construct ducts.
2. After testing and balancing, install test ports and duct access doors that comply with requirements in Section 15815 (Ductwork and Accessories).
3. Install and join new insulation that matches removed materials. Restore insulation, coverings, vapor barrier, and finish according to Section 15815 (Ductwork and Accessories).

B. Mark equipment and balancing devices, including damper-control positions, valve position indicators, fan-speed-control levers, and similar controls and devices, with paint or other suitable, permanent identification material to show final settings.

3.4 GENERAL PROCEDURES FOR BALANCING AIR SYSTEMS

A. Prepare test reports for both fans and outlets. Obtain manufacturer's outlet factors and recommended testing procedures. Crosscheck the summation of required outlet volumes with required fan volumes.

B. Prepare schematic diagrams of systems' "as-built" duct layouts.

C. Determine the best locations in main and branch ducts for accurate duct-airflow measurements.

D. Check airflow patterns from the outdoor-air louvers and dampers through the supply-fan discharge.

E. Locate start-stop and disconnect switches, electrical interlocks, and motor starters.

F. Verify that motor starters are equipped with properly sized thermal protection.

G. Check dampers for proper position to achieve desired airflow path.

H. Check for airflow blockages.

I. Check condensate drains for proper connections and functioning.

J. Check for proper sealing of heat pump components.

K. Verify that air duct system is sealed.

3.5 PROCEDURES FOR CONSTANT-VOLUME AIR SYSTEMS

A. Adjust fans to deliver total indicated airflows within the maximum allowable fan speed listed by fan manufacturer.

1. Measure total airflow.

    a. Where sufficient space in ducts is unavailable for Pitot-tube traverse measurements, measure airflow at terminal outlets and inlets and calculate the total airflow.

2. Measure fan static pressures as follows to determine actual static pressure:

    a. Measure outlet static pressure as far downstream from the fan as practical and upstream from restrictions in ducts such as elbows and transitions.
    b. Measure static pressure directly at the fan outlet or through the flexible connection.
    c. Measure inlet static pressure of single-inlet fans in the inlet duct as near the fan as possible, upstream from the flexible connection, and downstream from duct restrictions.
    d. Measure inlet static pressure of double-inlet fans through the wall of the plenum that houses the fan.

3. Measure static pressure across each component that makes up an air-handling unit, and other air-handling and -treating equipment.

    a. Report the cleanliness status of filters and the time static pressures are measured.

4. Review Record Documents to determine variations in design static pressures versus actual static pressures. Calculate actual system-effect factors. Recommend adjustments to accommodate actual conditions.
5. Obtain approval from Owner for adjustment of fan speed higher or lower than indicated speed. Comply with requirements in Section 15745 (Water Source Heat Pumps) for air-handling units for adjustment of fans, belts, and pulley sizes to achieve indicated air-handling-unit performance.
6. Do not make fan-speed adjustments that result in motor overload. Consult equipment manufacturers about fan-speed safety factors. Modulate dampers and measure fan-motor amperage to ensure that no overload shall occur. Measure amperage in full-cooling, full-heating, and any other operating mode to determine the maximum required brake horsepower.

B. Adjust volume dampers for main duct, submain ducts, and major branch ducts to indicated airflows within specified tolerances.

1. Measure airflow of submain and branch ducts.

a. Where sufficient space in submain and branch ducts is unavailable for Pitot-tube traverse measurements, measure airflow at terminal outlets and inlets and calculate the total airflow for that zone.

2. Measure static pressure at a point downstream from the balancing damper, and adjust volume dampers until the proper static pressure is achieved.
3. Remeasure each submain and branch duct after all have been adjusted. Continue to adjust submain and branch ducts to indicated airflows within specified tolerances.

C. Measure air outlets and inlets without making adjustments.

1. Measure terminal outlets using a direct-reading hood or outlet manufacturer's written instructions and calculating factors.

D. Adjust air outlets and inlets for each space to indicated airflows within specified tolerances of indicated values. Make adjustments using branch volume dampers rather than extractors and the dampers at air terminals.

1. Adjust each outlet in same room or space to within specified tolerances of indicated quantities without generating noise levels above the limitations prescribed by the Contract Documents.
2. Adjust patterns of adjustable outlets for proper distribution without drafts.

3.6 GENERAL PROCEDURES FOR HYDRONIC SYSTEMS

A. Prepare test reports with pertinent design data, and number in sequence starting at pump to end of system. Check the sum of branch-circuit flows against the approved pump flow rate. Correct variations that exceed plus or minus 5 percent.

B. Prepare schematic diagrams of systems' "as-built" piping layouts.

C. Prepare hydronic systems for testing and balancing according to the following, in addition to the general preparation procedures specified above:

1. Open all manual valves for maximum flow.
2. Check pressure in expansion tank.
3. Check makeup water-station pressure gage for adequate pressure for highest vent.
4. Check flow-control valves for specified sequence of operation, and set at indicated flow.
5. Set system controls so automatic valves are wide open to heat exchangers.
6. Check pump-motor load. If motor is overloaded, throttle main flow-balancing device so motor nameplate rating is not exceeded.
7. Check air vents for a forceful liquid flow exiting from vents when manually operated.

3.7 PROCEDURES FOR VARIABLE-FLOW HYDRONIC SYSTEMS

A. Verify that the manual shut-off valves are fully open.

B. Verify that the piping system has been flushed and cleaned.

C. For each Recycled Water Pump, open all heat pump control valves, Run pumps at design set point pressure. Adjust balancing valve such that pump operates within 10 percentage points of pumps best efficiency point.

D. For each heat pump served, open heat pump control valve and close all others. For each heat pump, ensure each Recycled Water pump speed can operate within 10 percentage points of pump's best efficiency point for that speed, for each heat pump. Adjust balancing valve such that pump remains within 10 efficiency points with all heat pump control valves open and with any single heat pump control valve open.

E. Adjust pressure set point to 30% higher and 30% lower than design set point. Ensure pump operates within 10 percentage points of best efficiency point under all heat pump control valve combination of open and close.

F. Measure flow at all operating conditions.

G. Adjust balancing stations to within specified tolerances of indicated flow rate as follows:
   1. Determine the balancing station with the highest percentage over indicated flow.
   2. Adjust each station in turn, beginning with the station with the highest percentage over indicated flow and proceeding to the station with the lowest percentage over indicated flow.
   3. Record settings and mark balancing devices.

H. Measure pump flow rate and make final measurements of pump amperage, voltage, rpm, pumps heads, and systems' pressures and temperatures including outdoor-air temperature.

3.8 PROCEDURES FOR MOTORS

A. Motors, 1/2 HP and Larger: Test at final balanced conditions and record the following data:

   1. Manufacturer's name, model number, and serial number.
   2. Motor horsepower rating.
   3. Motor rpm.
   4. Efficiency rating.
   5. Nameplate and measured voltage, each phase.
   6. Nameplate and measured amperage, each phase.
   7. Starter thermal-protection-element rating.

END OF SECTION

SECTION 15990

COMMISSIONING OF HVAC SYSTEMS

PART 1 GENERAL

1.1 SUMMARY:

A. Section Includes:
   1. Commission of heating, ventilating, and air-conditioning (HVAC) systems.
   2. Pre-commissioning checks.
   3. Functional performance tests.

B. Related Sections:
   1. Section 15950 (Testing, Adjusting, and Balancing of HVAC Systems)

1.2 REFERENCES:

A. Commissioning Report as described in CalGreen A5.204.46.

1.3 SUBMITTALS

A. Data
   1. Commissioning Team: List of team members who will represent the Contractor and its subcontractors in the pre-commissioning checks and functional performance testing; provide list at least 2 weeks prior to the start of pre-commissioning checks.
   2. Test Procedures: Detailed procedures for pre-commissioning checks and functional performance tests, provide at least 4 weeks prior to the start of pre-commissioning checks.
   3. Test Schedule: Schedule for pre-commissioning checks and functional performance tests, provide at least 4 weeks prior to the start of pre-commissioning checks.

B. Field Test Reports
   1. Test Reports: Completed pre-commissioning checklists and functional performance test checklists organized by system and by subsystem and submitted as one package. The results of failed tests shall be included along with a description of the corrective action taken. .

1.4 SEQUENCING AND SCHEDULING

1. The Work described in this Section shall begin only after all Work required in Section 01750 (Starting and Adjusting) and Section 15950 (Testing, Adjusting, and Balancing of HVAC Systems) has been successfully completed and all test and inspection reports and operation and maintenance manuals required in these Sections have been submitted and approved.

PART 2 PRODUCTS - NOT USED

PART 3 EXECUTION

3.1 EXAMINATION COMMISSIONING TEAM AND CHECKLISTS

A. Designate team members to participate in the pre-commissioning checks and the functional performance testing specified herein. The team members shall be as follows:

Designation	Function
M	Contractor's Representative
E	Contractor's Electrical Representative
T	Contractor's Testing, Adjusting, and Balancing Representative
C	Contractor's Controls Representative
O	Owner

B. Each checklist shown in Attachments A and B of this Section shall be completed by the commissioning team. Acceptance by each commissioning team member of each pre-commissioning checklist item shall be indicated by initials and date unless shading is shown indicating that participation by that individual is not required. Acceptance by each commissioning team member of each functional performance test checklist shall be indicated by signature and date. Where multiple pieces of equipment or systems exist, the Contractor shall copy the checklist and complete for each piece of equipment and system.

3.2 TESTS

A. The pre-commissioning checks and functional performance tests shall be performed in a manner which essentially duplicates the checking, testing, and inspection methods established in the related Sections. Where checking, testing, and inspection methods are not specified in other Sections, methods shall be established which will provide the information required. Testing and verification required by this Section shall be performed during the Commissioning phase. Requirements in related Sections are independent from the requirements of this Section and shall not be used to satisfy any of the requirements specified in this Section. A pre-commissioning check or functional performance test shall be aborted if any system deficiency prevents the successful completion of the test or if any participating Contractor commissioning team member of which participation is specified is not present for the test.

1. Pre-Commissioning Checks: Pre-commissioning checks shall be performed for the items indicated on the checklists in Attachment A. Deficiencies discovered during these checks shall be corrected and retested in accordance with the applicable contract requirements.
2. Functional Performance Tests: Functional performance tests shall be performed for the items indicated on the checklists in Attachment B.

Functional performance tests shall begin only after all pre-commissioning checks have been successfully completed. Tests shall prove all modes of the sequences of operation, and shall verify all other relevant contract requirements. Tests shall begin with equipment or components and shall progress through subsystems to complete systems. Upon failure of any functional performance test checklist item, the Contractor shall correct all deficiencies in accordance with the applicable contract requirements. The checklist shall then be repeated until it has been completed with no errors.

a. Once deficiencies have been corrected, operate HVAC systems for 5 days continuously to confirm no cumulative affects occur. Systems to be tested include, but are not limited to, heat pumps, fan coils and accessories, duct work, dampers, recycled water system, pumps, control systems, make up water, and all ancillary systems.
b. After 5 days of continuous operation, without Contractor corrections and with approval of Owner, Owner will assume operational control for systems tested. Within the first 2 weeks of Owner's assumption of operational control, be available within 2 hours (24 hours per day) to correct any emergency which is a result of Contractor's defective product or workmanship.

END OF SECTION

ATTACHMENT A – PRE-COMMISSIONING CHECKLISTS AND
ATTACHMENT B – FUNCTIONAL PERFORMANCE TESTS CHECKLISTS

FOLLOW THIS PAGE

ATTACHMENT A

PRE-COMMISSIONING CHECKLISTS

.

Pre-Commissioning Checklist
Recycled Water Piping System

Checklist Item	M	E	T	C	O
INSTALLATION					
a. Piping complete.	____	■	■	■	____
b. As-built shop drawings submitted.	____	■	■	■	____
c. Piping flushed and cleaned.	____	■	■	■	____
d. Strainers cleaned.	____	■	■	■	____
e. Valves installed as required.	____	■	■	■	____
f. Piping insulated as required.	____	■	■	■	____
g. Thermometers and gauges installed as required.	____	■	____	■	____
h. Verify operation of valves.	____	■		■	____
i. Air vents installed as specified.	____	■	■	■	____
j. Flexible connectors installed as specified.	____	■	■	■	____
k. Verify that piping has been labeled and valves identified as specified.	____	■	■	■	____
<u>Testing, Adjusting, and Balancing (TAB)</u>					
a. Hydrostatic test complete.	____	■	____	■	____
b. TAB operation complete.	____	■	____	■	____

Pre-Commissioning Checklist: **Ductwork**

Checklist Item	M	E	T	C	O
INSTALLATION					
a. Ductwork complete.	____	■	■	■	____
b. Ductwork leak test complete	____	■		■	____
c. Access doors installed as required.	____	■	■	■	____
d. Ductwork insulated as required and in good condition.	____	■	■	■	____
e. Thermometers and gauges installed as required.	____	■	____	■	____
f. Verify proper installation and operation of dampers.	____	■			____
g. Flexible connections installed at mechanical units.	____	■	■	■	____

Pre-Commissioning Checklist
Base Mounted (Recycled Water Distribution) Pumps:

Checklist Item	M	E	T	C	O
INSTALLATION					
a. Pumps grouted & anchored in place.		■	■	■	
b. Pump vibration isolation devices functional.		■	■	■	
c. Pump/motor coupling alignment verified.		■	■	■	
d. Piping system installed.		■	■	■	
e. Piping system pressure tested.		■	■	■	
f. Pump not leaking.		■	■	■	
ELECTRICAL					
a. Power available to pump disconnect.	■		■	■	
b. Power rotation verified.				■	
c. Control system interlocks functional.					
d. Verify that power disconnect is located within sight of the unit it controls	■		■	■	
e. Pump connected to building HVAC controls system.					
<u>Testing, Adjusting, and Balancing (TAB)</u>					
a. Pressure/temperature gauges installed.		■			
b. Piping system cleaned.			■	■	
c. Water balance complete.					
d. Water balance with design maximum flow.					
e. TAB Report submitted.		■		■	

Pre-Commissioning Checklist
Horizontal Ceiling-Mounted Heat Pumps, Fan Coils

Checklist Item	M	E	T	C	O
INSTALLATION					
a. Mounted/supported with vibration isolators per spec.	___	■	■	■	___
b. Recycled water connections properly piped.	___	■	■	■	___
c. Recycled water pipe leak tested.	___	■	■	■	___
d. Manufacturer's required maintenance clearance provided.	___	■	■	■	___
e. Supply and return air plenums connected and sealed.	___	■	■	■	___
f. Outside air ductwork provided.	___	■	■	■	___
g. Condensate drain pan and piping installed and routed as per plans.	___	■	■	■	___
h. Fan cfm adjusted to design conditions. ECM motors operating properly over entire range.	___	■	___	■	___
i. Factory startup and checkout worksheets complete.	___	___	___	■	___
ELECTRICAL					
a. Power available to unit starter.	___	___	■	___	___
b. Power available to unit control panel.	___	___	■	___	___
c. Verify that power disconnect is located within sight of the unit it controls.	___	___	■	■	___
CONTROLS	___	___	___	___	___
c. Unit connected to building HVAC controls system.	___	___	___	___	___

Pre-Commissioning Checklist
Exhaust Fans:

Checklist Item	M	E	T	C	O
INSTALLATION					
a. Fan belt adjusted, as applicable	____	■	____	■	____
ELECTRICAL					
a. Power available to fan disconnect.	____	____	■	■	____
b. Proper motor rotation verified.	____	____	■	■	____
c. Verify that power disconnect is located within sight of the unit it controls.	____	____	■	■	____
CONTROLS					
a. Control interlocks properly installed.	____	____	____	____	____
b. Control interlocks operable.	____	____	____	____	____
c. Dampers/actuators properly installed.	____	____	____	____	____
d. Dampers/actuators operable.	____	____	____	____	____
e. Verify proper location and installation of thermostat. (if applicable)	____	____	■	____	____
Testing, Adjusting, and Balancing (TAB)					
a. TAB results +10%/-0% to cfm shown on drawings.	____	■	____	■	____
b. TAB Report submitted.	____	■	____	■	____

Pre-Commissioning Checklist
HVAC Controls System

Checklist Item	M	E	T	C	O
INSTALLATION					
a. All specified shop drawings submitted.	____	____		____	____
b. Layout of controls matches drawings.	____	____		____	____
c. Owner's Instruction manual created.	____	____		____	____
d. Components correctly labeled.	____	____		____	____
e. Control components piped and/or wired to each labeled terminal strip.	____	____		____	____
f. Control wiring and tubing labeled at all terminations, splices, and junctions.	____	____		____	____
g. Shield wiring used on electronic sensors.	____	____		____	____
h. System operates per sequence of operation.					
ELECTRICAL					
a. 24V power provided to each thermostat	____	____		____	____
b. Power provided to on-board controls at heat pumps and fan coils	____	____		____	____
TESTING, COMMISSIONING, & BALANCING					
a. Testing, Commissioning, and Balancing Report submitted.	____	____	____	____	____

ATTACHMENT B

FUNCTIONAL PERFORMANCE TESTS CHECKLISTS

Functional Performance Test Checklist **Variable Speed Pumps**

For Pump(s): _____

Prior to performing this checklist, ensure that the make-up water system is operational and that the recycled water tanks are filled to the proper level.

1. Activate pump start using control system commands (all possible combinations, on/auto, etc.). ON _____ AUTO _____ OFF _____

   a. Verify pump inlet/outlet pressure reading, compare to Testing, Adjusting, and Balancing (TAB) Report, pump design conditions, and pump manufacturer's performance.

	DESIGN	SYSTEM TEST	ACTUAL
Pump inlet pressure (psig)	_____	_____	_____
Pump outlet pressure (psig)	_____	_____	_____

   b. Operate pump at shutoff and at 100 percent of designed flow when all components are in full flow. Plot test readings on pump curve and compare results against readings taken from flow measuring devices.

	SHUTOFF	100 PERCENT
Pump inlet pressure (psig)	_____	_____
Pump outlet pressure	_____	_____
Pump flow rate (gpm)	_____	_____

   c. Operate pump at shutoff and at minimum flow or when all components are in full by-pass. Plot test readings on pump curve and compare results against readings taken from flow measuring devices.

	SHUTOFF	100 PERCENT
Pump inlet pressure (psig)	_____	_____
Pump outlet pressure	_____	_____
Pump flow rate (gpm)	_____	_____

2. Verify motor amperage each phase and voltage phase-to-phase and phase-to-ground for both the full flow and the minimum flow conditions.

   a. Full Flow

	PHASE 1	PHASE 2	PHASE 3
Amperage	_____	_____	_____
Voltage	_____	_____	_____

Functional Performance Test Checklist **Variable Speed Pumps**
For Pump(s): _____

Voltage-to-Ground	_____	_____	_____

b. Minimum Flow

	PHASE 1	PHASE 2	PHASE 3
Amperage	_____	_____	_____
Voltage	_____	_____	_____
Voltage-to-Ground	_____	_____	_____

3. Unusual vibration, noise, etc.

_____

_____

4. Certification: We the undersigned have witnessed the above functional performance tests and certify that the item tested has met the performance requirements in this section of the specifications.

	Signature and Date
Contractor	_____
	_____
Contractor's Electrical Representative	_____
Contractor's Testing, Adjusting and Balancing Representative	_____
Contractor's Controls Representative	_____
Owner	_____

Functional Performance Test Checklist **Extended Range Water Source Heat Pumps & Fan Coils**

For unit: _____

1. Functional Performance Test: Contractor shall demonstrate operation of heat pumps, fan coils and recycled water system as per specifications as follows:
   a. Heat pump or fan coil engages as needed by thermostat and HVAC controls system. _____
   b. Start recycled water pump to establish recycled water flow. _____
   c. Fan provides airflow at indicated rates. _____
   d. Heat pump reversing valve in correct position. _____
   e. Attached heat pump and fan coil commissioning checklist has been completed for all units at high speed/full flow. _____

2. Certification: We the undersigned have witnessed the above functional performance tests and certify that the item tested has met the performance requirements in this section of the specifications.

	Signature and Date
Contractor	_____
	_____
Contractor's Electrical Representative	_____
Contractor's Testing, Adjusting and Balancing Representative	_____
Contractor's Controls Representative	_____
Owner	_____

DIVISION 16

ELECTRICAL

SECTION 16050
COMMON WORK RESULTS FOR ELECTRICAL

PART 1 GENERAL

1.1 WORK NOT INCLUDED

A. Cooperate with the other trades who may or may not be party to this Contract for the purpose of coordinating the electrical requirements and installation of equipment, materials, and furnishings provided by those other trades, including the Owner.

1.2 REFERENCES

A. Provide equipment and materials which conform to, and perform the installation thereof in accordance with the following codes and industry standards:
   1. California Electrical Code (CEC).
   2. National Electrical Code (NEC).
   3. Titles 8, 19 and 24 of the California Code of Regulations (CCR).
   4. National Fire Protection Association (NFPA)
   5. American National Standards Institute (ANSI).
   6. California State Fire Marshal (CSFM).
   7. California Fire Code (CFC)
   8. Underwriters' Laboratories (UL).
   9. Electrical Testing Laboratories Inc (ETL)
   10. National Electrical Contractors' Association (NECA).
   11. National Electrical Manufacturers' Association (NEMA).
   12. International Electrical Testing Association (NETA)
   13. Institute of Electrical and Electronics Engineers (IEEE).
   14. International Electrotechnical Commission (IEC)
   15. American Society of Heating, Refrigerating and Air-Conditioning Engineers (ASHRAE)
   16. International Energy Conservation Code (IECC)
   17. National Electrical Safety Code (NESC) - Electrical Safety Orders
   18. Other applicable local codes and ordinances.

B. Where the authority-having-jurisdiction makes an interpretation or decision, as is their prerogative in accordance with the Code, such direction shall be considered a part of these Contract Documents as if contained herein. With respect to completing the intent of the Contract Documents, comply with any and all requirements of the authority-having-jurisdiction and utility company field inspectors, at no additional cost.

1.3 UTILITY FEES

A. Pay utility company charges for normal or after hours shutdowns, service calls, repairs, and cable locating that are directly related to the installation of the Electrical Work.

1.4 WORKING SPACE

A. Maintain adequate work space around, and access to, electrical and mechanical equipment in strict accordance with the applicable Codes. Verify during the course of construction that

sufficient space will be available for the installation and maintenance of equipment, fixtures, etc.

1.5 MATERIALS AND SUBSTITUTIONS

A. Specific trade names are used in the Drawings and Specifications in order to establish the standard grade and characteristics of said items. This does not imply the right upon the part of the Contractor to use other materials or methods without the approval of the Owner.

B. Electrical materials and equipment shall bear the label of, or be listed by, the UL wherever standards have been established and label service is regularly furnished by that agency. Comply with the installation and application requirements of UL as documented in their published directories.

C. Maintain uniformity throughout the Project by making use of only one make or brand of material for each material used.

1.6 SUBMITTALS

A. Shop Drawings for equipment and materials as noted in each Division 16 specification section. Bind the submittals as complete volumes according to classification of equipment such as power, lighting, fire alarm, etc. When possible, make all electrical submittals at the same time.

B. Arrange panelboard submittals to show bussing, circuit numbering, and branch circuit protective devices similar the schedules as indicated. Show elevations of switchboards, motor control centers, and distribution centers indicating the layout of devices, meters, handles, etc. Provide device ratings, circuit numbers, and nameplate descriptions in table form. Include terminal strip mounting arrangements on elevations for terminal cabinets.

1.7 DRAWINGS AND SPECIFICATIONS

A. The layout of electrical equipment, wiring, and accessories is shown in a diagrammatic fashion (not pictorially) in order to achieve clarity and legibility. Although the size and location of electrical equipment is drawn to scale wherever possible, refer to all data in the Contract Documents and field verify this information as the project progresses. Examine architectural, structural, mechanical, and other drawings to determine the exact location of conduits, outlets, fixtures, and equipment and to note any conditions which may affect the electrical Work.

B. Because the Electrical Drawings may be distorted for clarity of representation, it may be necessary to field verify the exact location of electrical outlets, lights, switches, etc. in order to conform to the architectural elements. The Owner reserves the right to make minor changes to the locations of equipment, devices, and wiring shown, at no additional cost, providing the changes are ordered before the rough-in of conduit, boxes, or related items is completed, and no extra material are required.

C. Conduit quantities, sizes, termination points, and wiring are indicated. However, not all conduit bends or routing details are indicated. Route conduit so as to conform to the

structural conditions, avoid obstructing other trades, maintain space restrictions and keep circulation areas and access openings clear.

1.8 MANUFACTURER'S DIRECTIONS

A. Adhere to the manufacturer's directions regarding the proper installation and configuration of electrical equipment where those directions cover points not included in these Drawings and these Specifications.

1.9 PROTECTION AND STORAGE

A. Deliver electrical materials to the Site new, and in unbroken packages. Protect electrical equipment and materials during transit, storage and handling to prevent damage, soiling and deterioration.

B. During shipping storage and handling protect electrical materials from damage of any type including dust, water, over-spray, and temperature. Avoid damage during construction to the Work and materials of other trades as well as the electrical Work and material. Repair or replace, at the Contractor's expense, defective or damaged items such that the entire Work is completed in a condition satisfactory to the Owner.

1.10 EXCAVATION, CUTTING, PATCHING, AND REPAIR

A. Perform excavation and backfill required for the installation of electrical sub-structures. Restore grounds, walkways, roadways, curbs, walls, and other existing underground facilities to their original condition.

B. Cut, core-drill, and demolish existing walls, floors, ceilings and other building surfaces as required for the installation of electrical Work. Obtain the approval of the Owner prior to performing any operation which may affect any structural elements of the building.

C. Patch and repair wood, plaster, tile, or concrete surfaces which have been damaged by the installation of the Electrical Work so that the finished surface matches the surrounding conditions.

1.11 FLASHING, WATERPROOFING AND SEALING

A. In general, install in an approved watertight manner, electrical Work which pierces exterior walls or waterproofing membranes. Flash and counter-flash roof and wall penetrations in a manner described in other applicable sections of this Specification and as approved by the Owner.

B. Fit conduits passing through finished walls with steel escutcheon plates of brass, chrome, or painted finish as directed by the Owner. Grout penetrations of floor slabs, concrete or masonry walls with an approved grout or silicone elastomeric caulk.

1.12 CLEANING, ADJUSTING, AND TOUCH-UP

A. Remove on a daily basis electrical debris, scraps, packaging material and other rubbish. Dispose of such items off-site in an approved manner and debris. Maintain the site free from physical hazards at all times in accordance with OSHA regulations.

B. After installation, completely clean electrical equipment, fixtures, and materials of excess paint, over-spray, plaster, cement, insulating products, and other foreign matter. Leave the Work in a clean, finished, dry, level, like new condition.

C. Touch-up paint scratches and scuffs on electrical equipment and lighting fixtures with paint recommended by the manufacturer and matching the original item finish.

D. Make setting, adjustments, and programming in accordance with the manufactures' operating and installation instructions. Settings and program variables will be issued by the Owner prior to commissioning of the electrical system.

1.13 INSPECTIONS AND TESTING

A. Arrange for the inspection of the Work at various stages of completion by the authority having jurisdiction, utility company representatives, and the Owner. Comply with all directions and remedial measures issued thereby. Any objections to these orders on the part of the Contractor must be presented to the Owner in writing within forty eight (48) hours of the inspection report.

B. Coordinate the installation of the Work so that observation of all rough-in, concealed, or underground Work can take place by the Owner.

C. Perform tests of the electrical system during the course of the project and at project completion to ensure safe and proper function in accordance with the Contract Documents, manufacturers' recommendations, and applicable codes. Testing shall include, but not necessarily be limited to, the following:
   1. Test for short circuits, open circuits, neutral leakage, and improper grounds on feeders and branch circuits. Perform this test with mains in disconnect from feeders, branch circuits closed, fixtures and devices permanently connected, lamps removed from sockets and wall switches closed.
   2. Provide insulation resistance tests of all phase and neutral circuit conductors using a 500 Volt Megger for circuits of 240 Volt rating and below, and a 1000 Volt Megger for circuits of 277 volts and above. Minimum acceptable insulation resistance is one (1) megohm.
   3. Perform a ground resistance test of each main grounding electrode system, ground rod, and supplemental grounding electrode. Utilize a calibrated, direct reading, earth ground test set and make the tests using the "Three-terminal, Fall-of-Potential" method. The maximum allowable earth ground resistance is 25 ohms.
   4. Test for proper phase-to-phase and phase-to-neutral operating voltage on the main service and on each separately derived system. Perform this test at full load and at no load. With all circuits at full operating conditions, test the phase and neutral load currents using a clamp-on ammeter.
   5. Tests as required by other sections of these Specifications.

6. Tests as prescribed by individual equipment manufacturers whether or not described in these Specifications.

D. Demonstrate to the Owner that the entire installation is complete, in proper operation condition. Activate all circuits, lights, devices, and controls under full load and normal operating conditions. Identify faulty items and immediately replace or repair defective equipment, workmanship, and materials to like new condition and retest in the presence of the Owner.

E. Demonstrate to the Owner that the entire electrical system is free from short circuits and improper grounds, or upon request of the Owner anytime, make necessary tests under the observation of the Owner which will ensure that electrical equipment, materials and installation methods are as specified.

PART 2 PRODUCTS

Not used.

PART 3 EXECUTION

Not used.

END OF SECTION

SECTION 16060

GROUNDING AND BONDING FOR ELECTRICAL SYSTEMS

PART 1 GENERAL

1.1 SUMMARY

A. This section includes:
1. Grounding electrodes and conductors; equipment grounding conductors; bonding methods and materials; conduit and equipment supports; anchors and fasteners; sealing and fireproofing of sleeves and openings between conduits and wall.
2. Inspection and testing of the Grounding and Bonding System; and Ground-Fault Protection Systems.

1.2 RELATED SECTIONS

1. Section 16123: 600-Volt Power Conductors and Cables

1.3 REFERENCES

1. ASTM B8 Standard Specification for Concentric-Lay-Stranded Copper Conductors, Hard, Medium-Hard, or Soft
2. ASTM B 187 Specifications for Copper Bus, Rod, and Shapes.
3. ASTM A 653 Standard Specifications for Sheet Steel, Zinc-Coated (Galvanized) or Zinc-Iron Alloy Coated(Galvannealed) by Hot Dip Process
4. IEEE 81 IEEE Guide for Measuring Earth Resistivity, Ground Impedance, and Earth Surface Potential of a Ground System
5. ANSI/IEEE 142 Recommended Practice for Grounding of Industrial and Commercial Power Systems.
6. IEEE 1100 Recommended Practice for Powering and Grounding Electronic Equipment.
7. NECA Standard of Installation.
8. NETA ATS Acceptance Testing Specifications for Electrical Power Distribution Equipment and Systems.
9. NFPA 70 NEC.
10. UL 467 Electrical Grounding and Bonding Equipment.

1.4 SYSTEM DESCRIPTION

A. Grounding electrode system consist of the following elements:
1. Metal underground water pipe
2. Metal frame of the building
3. Concrete encased electrode
4. Rod electrodes
5. Service equipment
6. Enclosures
7. Separately derived systems.

B. Anchor and fasten electrical products to building elements and finishes as follows:

1. Concrete Structural Elements: Provide preset inserts.
2. Concrete Surfaces: Provide epoxy or expansion anchors.
3. Interior Structural Steel: Provide appropriate size beam clamps.
4. Solid Masonry Walls: Use expansion anchors and preset inserts.
5. Sheet Metal: Provide sheet metal screws.

1.5 DESIGN REQUIREMENTS

A. Furnish products listed and classified by UL, ETL, or other recognized, acceptable testing and listing agencies as suitable for purpose specified and shown.

B. Grounding shall be in accordance with the NEC. Where size, type, rating and quantities indicated or specified are in excess of NEC requirements, the more stringent requirements and the greater size, rating, and quantity indications govern.

C. Select materials, sizes, and types of anchors, fasteners, and supports to carry at least twice the loads of equipment and raceway, including weight of wire and cable in raceway.

1.6 SUBMITTALS

A. Product Data:
1. Grounding electrodes and connections for fastening components; fire stopping material; and fireproofing sealants.

B. Test Report:
1. Grounding & Bonding: certified test.
2. Ground-Fault Protection System: certified test report.

1.7 CLOSEOUT SUBMITTALS

A. Record actual locations of components and grounding electrodes.

1.8 FIELD MEASUREMENTS

A. Verify field measurements prior to fabrication.

B. Field testing shall be performed by a third party testing firm with certification from a recognized testing agency, with a minimum of five years of testing experience.

PART 2 PRODUCTS

2.1 GROUNDING SYSTEM

A. Except as indicated elsewhere, provide materials for electrical grounding system, including, but not limited to, cables, wires, connectors, terminals (solderless lugs) and exothermic welds, grounding rods and electrodes, bonding jumper and braided straps, and other items and accessories required for a complete installation. Where more than one type of material or equipment meets indicated requirements, selection shall be at Contractor's option. Where

materials or components are not otherwise indicated, provide products as recommended by the accessories manufacturers and in compliance with the NEC and established industry standards.

B. All grounding materials required shall be furnished new and undamaged in accordance with the requirements of these specifications:

2.2 WIRE

A. Service Equipment Grounding Electrode Conductor: Bare, soft-drawn copper, Class AA stranding, ASTM B 8. Size per NEC Table 250-66, unless otherwise noted.

B. Electrical Equipment Grounding Conductor: Insulated, soft-drawn copper, Class B stranding or solid, with green colored polyvinyl chloride insulation. Size per NEC Article 250-122, unless otherwise noted.

2.3 BUS AND BARS

A. Silver plated, soft copper with cross section not less than 1 square inch per 1,000 ampere rating, but in no case less than 1/4-inch thick by 1-inch wide, ASTM B 187. Rating shall be per the NEC, unless otherwise noted.

2.4 EXOTHERMIC WELD CONNECTIONS

A. Exothermic materials, accessories and tools for preparing and making permanent field connections between grounding system components. Molds, cartridges, materials, and accessories as recommended by the manufacturer of the molds for the items to be welded.

B. Manufacturers:
1. Cadweld (Erico Products) "Exolon" Low Emission. Molds and powder shall be furnished by the same manufacturer.
2. Or Approved Equal.

2.5 MECHANICAL CONNECTORS

A. Mechanical connectors shall be permitted only when exothermic weld connections are not suitable or recommended by the manufacturer.

B. Bolt-on bronze connectors, suitable for grounding and bonding applications in configurations required for the particular installation.

C. Manufacturers:
1. Burndy Corp.
2. Anderson
3. Thomas & Betts
4. 3-M Co.
5. Or Approved Equal

2.6 FLUSH GROUND PLATES

A. Cadweld B-162 series, B-164 series, or Approved Equal.

2.7 FLEXIBLE JUMPER STRAP

A. Flexible flat conductor, 480 strands of 30-gauge, bare copper wire; ¾-inch width, 9-1/2-inch-long; 48.25 kcMil, minimum. Protect braid with copper bolt-hole ends with holes sized for 3/8-inch diameter bolts.

2.8 BONDING PLATES, CONNECTIONS, TERMINALS AND CLAMPS

A. Provide electrical bonding plates, connectors, terminals and clamps, and accessories as recommended by the manufacturer for the specific applications. Components shall be high-strength, high-conductivity copper alloy.

2.9 UFER GROUND

A. In accordance with the NEC.

2.10 ROD ELECTRODES

A. Copper-clad steel, 5/8-inch minimum diameter, 10 feet long, coupling type unless otherwise noted.

2.11 GROUNDING WELL COMPONENTS

A. Well Pipe: 8 inches NPS (DN200) by maximum 12 inches long, precast concrete or fiberglass pipe with belled end.

B. Well Cover: Cast iron, high impact traffic rated cover with legend "GROUND" embossed on outer face.

2.12 ANCHORS AND FASTENERS

A. Indoor Locations: Epoxy type anchors and heavy-duty, galvanized steel screws and bolts.

B. Outdoor Locations: Epoxy type or Red Head anchor bolts and stainless steel screws and bolts.

2.13 SUPPORT CHANNEL

A. All conduit and electrical equipment support channels for interior, exterior, wet and corrosive areas shall be galvanized steel.

B. Support channels for free standing electrical equipment such as switchgear, switchboard antennas, and motor control centers, shall be:
   1. Indoors: galvanized steel channel and hardware, minimum 12 gauge, ASTM A653 Grade 33 sheet steel, zinc coated by hot dip process.
   2. Outdoors: 316 Stainless steel

PART 3 EXECUTION

3.1 EXAMINATION

A. Verify that abandoned wiring and equipment serve only abandoned facilities.

3.2 EXISTING WORK

A. Modify existing grounding system to maintain continuity to accommodate renovations.

B. Extend existing grounding system using materials and methods as specified.

C. Install temporary wiring and connections to maintain existing grounding systems in service during construction.

D. Perform work on energized equipment or circuits with experienced and trained personnel following all safety rules and procedures.

E. Remove, relocate, and extend existing installations to accommodate new construction.

F. Repair adjacent construction and finishes that are damaged during demolition and extension work.

G. Remove exposed and/or abandoned grounding and bonding components, fasteners, supports and electrical identification labels. Cut embedded support elements below surface of walls and floors. Patch surfaces damaged by removal of existing components to match surrounding finishes.

3.3 GROUNDING AND BONDING INSTALLATION:

A. Verify that final backfill and compaction has been completed before driving rod electrodes.

B. Install grounding well with cover at rod locations as indicated. Install well top flush with finished grade.

C. Installation:
   1. Remove paint, rust, mill-oils, and surface contaminants at connection points.
   2. Install grounding electrode conductor and connect to reinforcing steel in slab or foundation.
   3. Bond together metal siding not attached to grounded structure; bond to ground.
   4. Bond together reinforcing steel and metal accessories.
   5. Connect to site grounding system.
   6. Install continuous grounding using underground cold water system and building steel as grounding electrode. Where water piping is not available, provide an artificial station ground by means of driven rods or buried electrodes.
   7. Permanently ground entire light and power system in accordance with NEC, including service equipment, distribution panels, lighting panel boards, switch and starter enclosures, motor frames, grounding type receptacles, and other exposed non-current carrying metal parts of electrical equipment.

8. Install branch circuits feeding isolated ground receptacles with separate insulated grounding conductor, connected only at isolated ground receptacle, ground terminals, and at ground bus of serving panel in accordance with IEEE 1100.
9. Accomplish grounding of electrical system by installing insulated grounding conductor with each feeder and branch circuit conductor in conduit. Install separate insulated conductor within each feeder and branch circuit raceway. Terminate each end on suitable lug, bus, or bushing. Size grounding conductor in accordance with the NEC.
10. Install grounding conductor from ground bus of serving panel to ground bus of served panel, grounding screw of receptacles, lighting fixture housing, light switch outlet boxes, and metal enclosures of service equipment.
11. Bond all metallic conduits to grounding bus at service panel by means of grounding bushings using minimum No. 12 AWG conductor.
12. Ground electrical system using continuous metal raceway system enclosing circuit conductors in accordance with NEC. Bond together each metallic raceway, pipe, duct and other metal object entering enclosures and exiting slabs.
13. Permanently bond all equipment, grounding conductors, lightning protection system and grounding system prior to energizing equipment.

3.4 GROUND CONDUCTORS

A. Grounding conductors shall be located and connected as indicated or as required by Code.

B. Ground conductors under buildings or structures shall be buried with at least 6 inches of earth cover. Buried grounding conductors extending beyond the foundations of buildings or structures shall have at least 18 inches of earth cover.

C. Exposed conductors shall be installed inconspicuously in vertical or horizontal positions on supporting structures. When located on irregular supporting surfaces or equipment, the conductors shall run parallel to or normal to dominant surfaces.

D. Conductors routed over concrete, steel, or equipment surfaces shall be kept in close contact with those surfaces by using fasteners located at intervals not to exceed 3 feet.

E. Conductors passing through floor slabs shall be installed in conduit sleeves that extend above the floor slab, a minimum of 1-1/2 inches to provide protection. Sleeves shall be sealed to maintain fireproof integrity.

F. Provide isolated grounding conductor for circuits supplying equipment and systems as indicated.

G. Provide a separate equipment-grounding conductor for low voltage distribution systems, single or three phase feeder circuit and each branch circuit with single or three phase protective devices. Install a grounding conductor in conduit with phase and neutral conductors. Single-phase branch circuits for 120 and 277 volt lighting, receptacles, and motors shall have a phase, neutral, and ground conductors installed in the common conduit. Provide suitable bonding jumpers and approved grounding type bushings for flexible conduits used for equipment connection utilized in conjunction with the above branch circuits. Single-phase circuits for equipment and all branch circuits installed in non-metallic or flexible conduits shall be provided with a separate grounding conductor.

H. Ground the neutral of separately derived systems with a bare copper conductor, installed in conduit, from the neutral directly to the building interior cold water pipe or nearest solidly grounded structural reinforcing steel, in accordance with the provisions of NEC Article 250-24. Use bolted accessible connections to the ground system so that the neutral ground can be disconnected for test. Ground the system ground conduit as detailed on drawing. Size the grounding electrode conductors in accordance with the NEC, Table 250-66, or as indicated.

3.5 CONNECTIONS

A. All connections shall be made by the exothermic welding process, except where otherwise indicated. The manufacturer's instructions on the use of exothermic welding materials shall be followed in all details. Powder and molds shall be kept dry and warm until use. Worn or damaged molds shall not be used.

B. All surfaces to be joined by the welds shall be thoroughly cleaned. Paint, scale, and other deleterious substances shall be removed from surfaces of ungalvanized structural steel members by grinding. Galvanized steel surfaces shall be cleaned with emery paper.

C. All exothermic welded connections shall successfully resist moderate hammer blows. Any connection which fails such test or which, upon inspection, indicates a porous or deformed weld, shall be remade.

D. All exothermic welds shall encompass 100 percent of the ends of the materials being welded. Welds, which do not meet this requirement, shall be remade.

E. Worn, damaged, incorrectly sized, or improperly shaped molds which, in the opinion of the Owner, do not make satisfactory welds, shall be removed from the jobsite after being physically rendered inoperable.

F. All contact surfaces of bolted and screwed connections shall be thoroughly cleaned and coated with oxide inhibitor before being securely tightened.

3.6 CONDUIT GROUNDING

A. All grounding bushings within all enclosures, including equipment enclosures, shall be wired together and connected internally to the enclosure grounding lug or grounding bus with a bare copper conductor. Grounding bushings shall be grounded with conductors sized in accordance with NEC, but not smaller than No. 8 AWG.

3.7 EQUIPMENT GROUNDING

A. Comply with NEC 250, except where larger sizes or more conductors are indicated.
   1. All electrical equipment shall be connected to the grounding system with an insulated, green, stranded or solid copper equipment-grounding conductor.
   2. Terminate each end on suitable lug, bus, or bushing. The term "electrical equipment", as used in this article, shall include, but not be limited to, all enclosures containing electrical connections or bare conductors, except that individual devices, such as solenoids, pressure switches, and limit switches, shall be exempt from this requirement, unless the device requires grounding for proper operation.

3. Large equipment, such as metal-clad or metal-enclosed switchgear, will be furnished with a grounding bus that shall be connected to the grounding system.
4. Most other equipment will be furnished with grounding pads and/or grounding lugs which shall be connected to the grounding system. All ground connection surfaces shall be cleaned immediately prior to connection.
5. Contractor shall furnish all grounding material required, if not furnished with the equipment.

B. Install equipment grounding system such that all metallic structures, enclosures, raceways, junction boxes, outlet boxes, cabinets, machine frames, portable equipment and other conductive items in close proximity with electrical circuits will operate continuously at ground potential and provide a low impedance path for possible ground fault currents.

C. Where grounding system extension stingers are indicated to be provided for connection to electrical equipment, the Contractor shall connect the bare grounding conductor to the equipment ground bus, pad, or lug. Except where otherwise indicated, all equipment ground conductors that are not an integral part of a cable assembly, shall be sized in accordance with the requirements of NEC. All ground conductors installed in conduit shall be insulated.

D. Suitable grounding facilities, acceptable to the Owner, shall be furnished on electrical equipment not so equipped. The grounding facilities shall consist of compression type terminal connectors bolted to the equipment frame or enclosure and providing a minimum of joint resistance.

E. The conduit system is not considered to be a grounding conductor, except for lighting fixtures. No grounding conductor shall be smaller in size than No. 12 AWG, unless it is a part of an acceptable cable assembly.

3.8 GROUND SYSTEM RESISTANCE

A. Ground resistance of the system shall be no greater than five (5) ohms.

3.9 ANCHORS, FASTENERS AND SUPPORT

A. Installation:
1. Locate and install anchors, fasteners, and supports in accordance with NECA “Standard of Installation”.
2. Do not fasten supports to pipes, ducts, mechanical equipment, or conduit.
3. Do not use spring steel clips and clamps.
4. Do not use powder-actuated anchors.
5. Do not drill or cut structural members.

B. Supports:
1. Fabricate supports from structural steel or formed steel members. Rigidly weld members or install hexagon head bolts to present neat appearance with adequate strength and rigidity. Install spring lock washers under nuts.
2. Install surface-mounted cabinets and panel board with minimum of four (4) anchors.
3. Use steel channel supports to stand cabinets and panel boards one (1) inch off wall.

4. Use sheet metal channel to bridge studs above and below cabinets and panel boards recessed in hollow partitions.

3.10 ACCEPTANCE TESTING

A. Grounding and Bonding: Perform inspections and tests as outlined below (NETA ATS, Section 7.13 – Grounding Systems).

1. Visual and Mechanical Inspection

    a. Verify ground system is in compliance with Contract Documents.
    b. Electrical Tests
    c. Perform fall-of-potential test or alternative in accordance with IEEE 81 on the main grounding electrode or system. Instrumentation utilized shall be as defined in Section 12 of the above guide and shall be specifically designed for ground impedance testing. Provide sufficient spacing so that the plotted curves flatten in the 62% area of the distance between the item under test and the current electrode.
    d. Perform point-to-point tests to determine the resistance between the main grounding system and all major electrical equipment frames, system neutral, and/or derived neutral points.
    e. When sufficient spacing of electrodes per Electrical Tests is impractical, perform ground impedance measurements utilizing either the intersecting curves method or the slope method. (Ref. Nos. 40 and 41 in IEEE 81).
    f. Utilize two-point method of IEEE 81. Measure between equipment ground being tested and known low-impedance grounding electrode or system.
    g. Test shall be performed after a minimum of ten calendar days of dry weather so that the ground is not wet.

2. Test Values

    a. The resistance between the main grounding electrode and ground shall be greater than five (5) ohms for commercial or industrial systems and one ohm or less for generating or transmission station grounds unless otherwise specified by the Owner. (Reference: ANSI/IEEE Standard 142.) Equipment grounds, depending on size and length of grounding conductor, should be only fractionally higher than system ground.
    b. Investigate point-to-point resistance values which exceed 0.5 ohm.

END OF SECTION

SECTION 16075

IDENTIFICATION FOR ELECTRICAL SYSTEMS

PART 1 GENERAL

1.1 SUMMARY

A. The extent of the electrical systems and equipment requiring identification is indicated, and the extent of identification required is specified herein and in individual sections of Work requiring identification. The types of electrical identification specified in this section include the following:
   1. Exposed conduit color banding.
   2. Buried cable warnings.
   3. Cable/conductor identification.
   4. Operational instructions and warnings.
   5. Danger signs.
   6. Equipment/system identification signs.

1.2 REFERENCES

A. ANSI Z535.1 - Safety Color Code

B. APWA ULCC - Uniform Color Code for Buried Utilities.

C. NFPA 70 NEC.

1.3 SYSTEM DESCRIPTION

A. Label the following electrical equipment with nameplates which clearly identify each item, the function or use of the item, and the circuit identification of the feed to the item:
   1. All transformers shall be identified by 1-inch high block letters cut in stencil and applied with yellow paint on a flat-black background. The transformer number, primary and secondary voltages, and the kVA shall be shown. The nameplate shall be located on the front of the transformer.
   2. All Metal-Clad Switchgear, Metal-Enclosed Switchgear, Switchboards, Distribution Panelboards, Power and Lighting Panels, Motor Control Centers, Local Control Panels, Terminal Cabinets and all electrical equipment enclosure shall be identified using laminated plastic nameplates. Show the equipment number, voltage rating, current rating, number of phases, connection type, short circuit interrupting rating, and circuit number
   3. Identify all receptacles and lighting switches, by the circuit number indicated using ¼-inch high white characters on ½-inch wide black stick-on tape placed on the wall directly above the device if the device is wall mounted. Place the tape on the device enclosure if the device is not wall mounted.
   4. All motors, starters, disconnect switches, Time Switches, Special Function Pushbuttons and Switches, and miscellaneous control devices shall be identified by function and

circuit number, with ¼-inch high white characters on a ½-inch wide black stick-on tape where installed indoors and engraved plastic nameplates where installed outdoors.

5. All underground raceway or cable shall be marked with buried warning tape along its entire length.
6. All exposed raceway longer than 10 feet in length shall be identified.
7. Panelboard Directories: Furnish all panelboards with a complete 8-1/2-inch by 11-inch typewritten directory mounted in the inner door under a clear plastic cover set in a metal frame.

B. Branch circuits and devices:
1. Label all individual receptacle outlets at the outlet faceplate to indicate the panelboard of origin and branch circuit number. Label modular furniture feeds at the power pole drop in a visible and consistent location. Labels shall be self adhesive, thermal machine printed type such as Brothers, Panduit, T&B, or Approved Equal and shall be clear plastic with black lettering.
2. All branch circuits in outlet boxes shall be identified with circuit number using wrap-around labels (T&B, BRADY, 3M, or Approved Equal).
3. As an alternative to separate nameplates, device plates may be engraved directly with lettering filled with black enamel.

1.4 SUBMITTALS

A. Product Data: nameplates, labels, and markers.

B. Manufacturer's Instructions: Indicate application conditions and limitations of use stipulated by product testing agency specified under regulatory requirements. Include instructions for storage, handling, protection, examination, preparation and installation of product.

1.5 REGULATORY REQUIREMENTS

A. Conform to requirements of NFPA 70 – NEC.

B. Furnish products listed and classified by UL, ETL, or other recognized, approved testing and listing agencies as suitable for the purpose specified and shown.

PART 2 PRODUCTS

2.1 NAMEPLATES AND LABELS

A. Nameplates
1. Engraved, three layer laminated plastic, white letters on black background for normal power and white letters on red background for emergency power. Communications and control cabinets shall be labeled with white letters on green background.
2. Letter Size

   a. Use 1/2-inch letters for identifying individual equipment and loads.
   b. Use ¼-inch letters for identifying grouped equipment, loads, panelboards, and transfer switch.

c. Use ½-inch letters for identifying the main switchboard, motor control centers, and large distribution switchboards.

B. Labels
1. Embossed adhesive tape, with 3/16-inch white letters on colored background to match color scheme of plastic laminate labels in paragraph 2.1.A above. Use only for identification of individual wall switches and receptacles, control device stations, and multi-outlet devices.
2. Thickness

a. 1/16-inch for units up to 20 square inches or 8-inch length; 1/8-inch for larger units.

2.2 WIRE MARKERS

A. Manufacturers
1. Brady
2. Thomas & Betts
3. 3-M Co.
4. Or Approved Equal

B. Description: Tape, split sleeve, or tubing type wire markers, self-adhesive.

C. Locations: Each conductor at panelboard gutters, pull boxes, outlet and junction boxes, control panels, motor controllers and starters, and each load connection.

D. Legend
1. Power and Lighting Circuits: Branch circuit or feeder number indicated.
2. Control Circuits: Control wire number indicated on shop drawings.
3. Neutral Conductors: Clearly indicate the branch circuit or feeder number the neutral serves. In multi-wire circuits where the neutral is shared, mark the neutral with the circuit number of the "A" phase.

2.3 CONDUIT MARKERS

A. Provide manufacturer's standard preprinted, flexible or semi-rigid, permanent, plastic-sheet conduit markers, minimum of 3 mils thick and 1-1/2-inch wide extending 360 degrees around conduits; designed for self-adhesive attachment to conduit. Except as otherwise indicated, provide lettering that indicates the voltage of the conductor(s) in the conduit. Provide 8-inch minimum length for 2-inch and smaller conduit, 12-inch minimum length for larger conduit.

B. Identify conduits containing conductors above 600-volts with the following alternating markers
1. DANGER - HIGH VOLTAGE
2. The voltage, as applicable (i.e. – 12-kV, 4.16-kV, etc.)

C. Identify conduits containing conductors below 600-volts with the following markers
1. The voltage, as applicable (i.e. 480-Volts, 240-Volts, etc.)

D. Location: Furnish markers for each conduit longer than 10 feet.

E. Spacing: 20 feet on center.

F. Color: Unless otherwise indicated or required by governing regulation, provide conduit tags in the following colors.
   1. Normal and Emergency Power Systems: Orange w/black letters.
   2. Fire Alarm System: Red w/black letters.
   3. Telephone System: Green w/yellow letters.
   4. Data/Communication. System: White w/black letters.

G. Legend:
   1. 480 Volt System: Normal 480Y/277-volts.
   2. 208 Volt System: Normal 208Y/120-volts.
   3. Fire Alarm System: Fire alarm.
   4. Telephone System: Telephone.
   5. Data/Communication System: Data/Communications.

2.4 FASTENERS

A. Secure all labels and nameplates with self-tapping stainless steel screws. Use contact type permanent adhesive where screws cannot or should not penetrate the substrate.

2.5 BAKED ENAMEL DANGER SIGNS

A. Provide manufacturer's standard "DANGER" signs of baked enamel finish on 20 gage steel; of standard red, black and white graphics; 14-inch by 10-inch size except where 10-inch by 7-inch is the largest size which can be applied where needed, and except where larger size is needed for adequate vision; with recognized standard explanation wording (e.g. HIGH VOLTAGE, KEEP AWAY, BURIED CABLE, DO NOT TOUCH SWITCH).
   1. At each entry doors of Electrical Rooms: “DANGER HIGH VOLTAGE – KEEP OUT, AUTHORIZED PERSONNEL ONLY”

2.6 LETTERING AND GRAPHICS

A. Coordinate names, abbreviations and other designations used in the electrical identification Work, with the corresponding designations shown, specified or scheduled. Provide numbers, lettering and wording as indicated or, if not otherwise indicated, as recommended by manufacturers or as required for proper identification and operation/maintenance of the electrical systems and equipment.

2.7 UNDERGROUND WARNING TAPE

A. Three-inch minimum width, 5 mil thickness, foil bonded polyethylene tape, detectable type, with suitable continuous warning legend describing buried electrical lines. Tape color shall conform to APWA uniform color code using ANSI Z535.1 safety colors. Text shall be black, 2-inch minimum letters.

PART 3 EXECUTION

3.1 PREPARATION

A. Degrease and clean surfaces to receive nameplates and labels.

B. Coordination: Where identification is to be applied to surfaces that require finish, install identification after completion of painting.

C. Regulations: Comply with governing regulations and the requests of governing authorities for the identification of electrical Work.

3.2 APPLICATION

A. Install nameplate and label parallel to equipment lines.

B. Secure nameplate to equipment front using screws, rivets, or adhesive.

C. Secure nameplate to outside moveable surface of door on panelboard.

D. Conduit Identification:
   1. Where electrical conduit is exposed in spaces with exposed mechanical piping, which is identified by a color-coded method, apply color-coded identification on the electrical conduit in a manner similar to the piping identification. Except as otherwise indicated, use orange as the coded color for conduit.
   2. Paint red band or provide red tape on each fire alarm conduit longer than 10 feet, minimum 20 feet on center.

E. Cable/Conductor Identification:
   1. Apply cable/conductor identification on each cable and conductor in each box/enclosure/cabinet where the wires of more than one circuit or communication/signal system are present, except where another form of identification (such as color-coded conductors) is provided.
   2. Match identification with marking system used in panelboards, shop drawings, contract documents, and similar previously established identification for project electrical Work.

F. Operational Identification and Warnings
   1. Wherever reasonably required to ensure safe and efficient operation and maintenance of the electrical systems, and electrically connected mechanical systems and general systems and equipment, including the prevention of misuse of electrical facilities by unauthorized personnel, install self-adhesive plastic signs or similar equivalent identification, instruction or warnings on switches, outlets and other controls, devices and covers of electrical enclosures. Where detailed instructions or explanations are needed, provide plasticized tags with clearly written messages adequate for the intended purposes.

G. Danger Signs
   1. In addition to the installation of danger signs required by governing regulations and authorities, install appropriate danger signs at the locations indicated and at locations

subsequently identified by the Installer of electrical Work as constituting similar dangers for persons in or about the project.

2. High Voltage

   a. Install danger signs wherever it is possible, under any circumstances, for persons to come into contact with electrical power of voltages higher than 110-120 volts.
   b. Critical Switches/Controls
   c. Install danger signs on switches and similar controls, regardless of whether concealed or locked up, where untimely or inadvertent operation (by anyone) could result in significant danger to persons, or damage to or loss of property.

H. Equipment/System Identification Signs

1. Install an engraved plastic-laminate sign on each major unit of electrical equipment in the building; including the central or master unit of each electrical system and the communication/signal systems, unless the unit is specified with its own self-explanatory identification or signal system.
2. Except as otherwise indicated or specified, provide single line of test, ½-inch high lettering on 1-1/2-inch high sign (2-inch high where two lines are required), white lettering in black field.
3. Provide text matching terminology and numbering of the shop drawings.

I. Install signs at locations indicated or, where not otherwise indicated, at location for best convenience of viewing without interference with operation and maintenance of equipment. Secure to substrata with fasteners, except use adhesive where fasteners should not or cannot penetrate the substrata.

J. Identify underground conduits using underground warning tape. Install one tape per trench at 3 inches below finished grade.

END OF SECTION

SECTION 16121

MEDIUM VOLTAGE CABLES

PART 1 GENERAL

1.1 SUMMARY

A. Medium voltage (5-kV through 35-kV rated) cables, cable joints, terminations, connectors, cable splices and accessories.

1.2 REFERENCES

1. AEIC CS 5 Cross-Linked Polyethylene Insulated Shielded Power Cables Rated 5 Through 69-kV.
2. AEIC CS 6 Ethylene Propylene Rubber Insulated Shielded Power Cables Rated 5 Through 69-kV.
3. ANSI/IEEE C2 National Electrical Safety Code
4. ANSI/IEEE 48 Test Procedures and Requirements for High Voltage AC Cable Terminations
5. ASTM B 3 Soft or Annealed Copper Wire
6. ASTM B 496 Compact Round Concentric-Lay-Stranded Copper Conductors
7. ASTM B 8 Concentric-Lay-Stranded Copper Conductors, Hard, Medium-Hard, or Soft.
8. IEEE 100 IEEE Standard Dictionary of Electrical and Electronic Terms
9. IEEE 242 Recommended Practice for Protection and Coordination of Industrial and Commercial Power Systems.
10. IEEE 368 Separate Insulated Connector Systems for Power Distribution Systems above 600-Volts.
11. IEEE 399 Recommend Practice for Industrial and Commercial Power System Analysis.
12. IEEE 404 Cable Joints for Use with Extruded Dielectric Cable Rated 5 Through 138-kV and Cable Joints for Use with Laminated Dielectric Cables Rated 2.5 through 500-kV.
13. IEEE 592 Exposed Semi-conduction Shields on Premolded High Voltage Cable Joints and Separable Insulated Connectors.
14. NFPA 70 National Electrical Code
15. NEMA WC 7 Cross-Linked-Thermosetting-Polyethylene-Insulated Wire and Cable for the Transmission and Distribution of Electrical Energy.
16. NEMA WC 8 Ethylene-Propylene-Rubber-Insulated Wire and Cable for the Transmission and Distribution of Electrical Energy.
17. NEMA WC-26 Wire and Cable Packaging

18.	NETA ATS	National Electrical Testing Association Acceptance Testing Specifications for Electrical Power Distribution Equipment and Systems.
19.	UL 1072	Medium Voltage Power Cables.
20.	UL 486A	Wire Connectors and Soldering Lugs for Use with Copper Conductors.
21.	UL 510	Polyvinyl Chloride, Polyethylene and Rubber Insulating Tapes.

1.3 DESIGN REQUIREMENTS

A. Furnish products listed and classified by UL, ETL, or other recognized, acceptable testing and listing agencies as suitable for the purpose specified and shown.

B. Conform to requirements of NFPA 70 and ANSI/IEEE C2.

C. All cables shall be copper unless otherwise indicated. All conductor sizes are based on copper.

1.4 SUBMITTALS

A. Product Data:
1. Medium voltage cables, stress cones, connectors, splices and accessories.
2. Submit a complete itemized list of equipment and material proposed for incorporation into this work. Each entry shall include an item number, the quantity of item proposed and the name of the manufacturer of each such item.
3. Submit, as a minimum, installation procedures for medium-voltage cable terminations and splices.
4. Procedures shall include cable pulling plans, diagrams, instructions, and precautions required to install, adjust, calibrate and test the devices and equipment.
5. Manufacturer's warrantee information

B. Qualifications:
1. Companies/individuals performing medium voltage splices, connections, terminations, or testing shall submit documentation of a minimum of five years experience performing similar work. A resume shall be provided showing the cable installers' experience in the last three years, including a list of three references complete with point of contact, addresses and telephone numbers.

C. Test Report:
1. Factory Tests.

a. Submit certified factory test reports for manufacturer performed routine factory tests, including tests required by standards listed in paragraph 1.2. Results of factory tests performed shall be certified by the manufacturer, or an approved testing laboratory, and submitted within 7 days following

successful completion of the tests. The manufacturer's pass-fail criteria for tests specified in paragraph 1.4.B.2 shall be included.

2. Field Testing.

a. Submit a proposed field test plan, at least 20 days prior to testing the installed system. No field test shall be performed until the test plan is approved. The test plan shall consist of complete field test procedures including tests to be performed. Test equipment required, and tolerance limits. Submit the following:
   1) A list of equipment used, with calibration certifications.
   2) Copies of measurements taken.
   3) The dates of testing.
   4) The equipment and values to be verified.
   5) The conditions specified for the test.
   6) Measure overall insulation resistance to ground.
   7) Indicate results of cable test in tabular form and in plots of current versus voltage for incremental voltage steps, and current versus time at 30-second intervals at maximum voltage, signed and dated.
   8) Provide certified test report for Owner's Review

b. Cable Installation.
   1) Site layout drawing with cable pulls numerically identified.
   2) A list of equipment used, with calibration certifications.
   3) The cable manufacturer and type of cable.
   4) The dates of cable pull, time of the day, and ambient temperature.
   5) The length of cable pull and pulling tensions.
   6) The actual cable pulling tensions encountered during pull.

c. Certification.
   1) Material and Equipment. Where material and equipment are specified to conform to the standards of the UL or to be constructed and/or tested in accordance with the standards of the ANSI, IEEE, or NEMA, submit proof that the item provided conform to such requirements. The label of, or listing by, UL will be accepted as evidence that the item conforms. Either a certification or a published catalog specification data statement, to the effect that the item is in accordance with the referenced ANSI, IEEE and/or NEMA standard, will be acceptable as evidence that the item conforms. In lieu of such certification or published data, the contractor may submit a certificate from a nationally recognized testing agency equipped and competent to perform such services, stating that the items have been tested and that they conform to the requirements listed, including method of testing of the specified agencies.
   2) Cable Joints and Splices. A certification that contains the names and the qualifications of people recommended to perform the splicing and termination of medium-voltage cables approved for installation under this contract. The certification shall indicate that any person

recommended to perform actual splicing and terminations has been trained in the proper techniques and have had at least three recent years of experience in splicing and terminating the same or similar types of cables approved for installation. In addition, any person recommended by the Contractor may be required to perform a practice splice and termination, in the presence of the Owner, before being approved as a qualified installer of medium-voltage cables. If that additional requirement is imposed, the Contractor shall provide short sections of the approved types of cables along with the approved type of splice and termination kits, and detailed manufacturer's instruction for the proper splicing and termination of the approved cable types.

D. Test equipment calibration reports
   1. Submit calibration report and/or certification for each instrument used in testing the medium voltage system.

E. Manufacturer's Instructions:
   1. Indicate application conditions and limitations of use stipulated by product testing agency specified under Regulatory Requirements.
   2. Include instructions for storage, handling, protection, examination, preparation, installation, and starting of product.

1.5 CLOSEOUT SUBMITTALS

A. Submit Field Test Reports.

1.6 QUALIFICATIONS

A. Manufacturer: Company specializing in manufacturing products specified in this Section with minimum five years experience.

B. Installer:
   1. Company specializing in installing product specified in this section with minimum five years documented experience.
   2. Cable Installer Qualifications. The Contractor shall provide at least one onsite person in a supervisory position with documented level of competency and experience to supervise all cable pulling operations.

1.7 DELIVERY, STORAGE, AND HANDLING

A. Accept cable and accessories on Site in manufacturer's packaging. Inspect for damage.

B. Store and protect cable and accessories from the environment in accordance with manufacturer's published instructions. Damaged items shall be replaces at no additional cost to the Owner.

C. Provide adequate heating and ventilation to prevent condensation.

1.8 PROJECT CONDITIONS

A. Verify that field measurements are as indicated.

B. Cable routing as indicated is diagrammatic unless dimensioned. Determine exact routing and lengths required to provide a complete wiring system.

PART 2 PRODUCTS

2.1 MEDIUM VOLTAGE CABLE

A. Manufacturers:
   1. Southwire
   2. Okonite
   3. Approved Equal

B. Description: Cable conductor shall be single conductor type unless otherwise indicated. Cable construction shall be Type MV-90 or MV-105, conforming to NFPA 70, UL 1072 and NEMA WC 8, for use in conduit and/or buried duct.
   1. NEMA WC 8 - Ethylene-Propylene-Rubber-Insulated (EPR) Wire and Cable for the Transmission and Distribution of Electrical Energy.

C. Rating: Cable shall be rated for the system circuit voltage as indicated.
   1. 15-kV, ungrounded. 133% insulation level

D. Withstand Voltage Ratings: As recommended in NETA ATS Table 10.6 for 15 minutes.

E. Maximum Operating Temperatures: Per AEIC CS-6, Table A1.

F. Conductor:
   1. Class B stranded, compact or concentric round, soft annealed uncoated copper in accordance with ASTM B 3 and ASTM B 8 for regular concentric and compressed stranding or ASTM B 496 for compact stranding.

G. Construction:
   1. Cable insulation shall be an Ethylene-propylene-rubber (EPR) insulation conforming to the requirements of NEMA WC 8. The color of the insulation compound shall be in contrast to the color of the semiconducting insulation shield in accordance with AEIC CS-6, Part B.
   2. A 133 percent insulation level shall be used on 5-kV, 15-kV and 25-kV rated cables. Minimum insulation thickness shall be as follows:

      a. 220 mils for 15-kV rated cables.
   3. Shielding: Cables rated 2-kV and above shall have a semi-conducting conductor shield, a semi-conducting insulation shield, and an overall copper tape or wire shield for each cable. The shield tape or wire shall be sized to meet ANSI/IEEE C2 requirements. The conductor stress control layer (conductor shield or screen)

shall be an extruded, thermosetting, semi-conducting, polymeric compound compatible with the conductor and surrounding insulation.

4. The conductor screen shall be purposefully bonded to the insulation during the extrusion process. Every effort shall be made to eliminate any voids during this process in an effort to prevent corona at the cable core.
5. The overall jacket shall be an extruded polyvinyl chloride (PVC) or polyethylene that complies with the requirements of ICEA S-68-516, Part 4. The jacket shall be rugged, resistant to fuel oils, mineral oils, fixed alkalies, acids, industrial chemicals, and shall be sunlight resistant.
6. The cable shall be manufactured employing the triple tandem extrusion process to maintain cleanliness and uniformity.

2.2 CABLE JOINTS, TERMINATIONS, AND CONNECTORS

A. Medium-Voltage Cable Joints.

1. Medium-voltage cable joints shall comply with IEEE 404 and IEEE 592.
2. Joints shall be the standard products of a manufacturer and shall be either of the factory preformed type or of the kit type containing tapes and other required parts. Joints shall have ratings not less than the rating of the cables on which they are installed.
3. Splice kits may be of the heat-shrinkable type for voltages up to 15-kV, of the pre-molded splice and connect type, and conventional taped type, or the resin pressure-filled overcast taped type for voltages up to 35-kV; except that for voltages of 7.5-kV or less a resin pressure-filled type utilizing a plastic-tape mold is acceptable.
4. Joints used in manholes, handholes, vaults and pull boxes, shall be certified by the manufacturer for waterproof, submersible application.

B. Medium Voltage Separable Insulated Connectors.

1. Separable insulated connectors shall comply with IEEE 386 and IEEE 592 and shall be of suitable construction or standard splice kits shall be used.
2. Separable insulated connectors are acceptable for voltages up to 35-kV.
3. Connectors shall be of the load break type as indicated, of suitable construction for the application and the type of cable connected, and shall include cable shield adaptors.
4. Separable insulated connectors shall not be used as substitutes for conventional permanent splices.
5. External clamping points and test points shall be provided.

C. Terminations.

1. Medium-voltage cable terminations shall comply with IEEE 48 Class 1 or Class 2, of the molded elastomer, wet-process porcelain. Pre-stretched elastomer, heat-shrinkable elastomer, or taped type.
2. Acceptable elastomers are track-resistant silicone rubber or track-resistant ethylene propylene compounds, such as ethylene propylene rubber.
3. Separable insulated connectors may be used for apparatus terminations, when such apparatus is provided with suitable bushings.

4. Terminations shall be of the outdoor type unless indicate otherwise.
5. Indoor, class 2 terminations are acceptable where installed inside outdoor equipment housings that are sealed against normal infiltration of moisture and outdoor air.
6. Class 3 terminations are not acceptable.
7. Terminations, where required, shall be provided with mounting brackets suitable for the intended installation and with grounding provisions for the cable shielding, metallic sheath, and armor.

D. Factory Preformed Type.
1. Molded elastomer, wet-process porcelain, pre-stretched, and heat shrinkable terminations shall utilize factory preformed components to the maximum extent practicable rather than tape build-up.
2. Terminations shall have basic impulse levels as required for the system voltage level.
3. Leakage distance shall comply with wet withstand voltage test requirements of IEEE 48 for the next higher Basic Impulse Level (BIL).
4. Anti-tracking tape shall be applied over exposed insulation of preformed molded elastomer terminations.

E. Taped Terminations.
1. Taped termination shall be standard termination kits providing terminal connectors, field fabricated stress cones, and rain hoods.

2.3 CABLE TERMINATIONS

A. Manufacturers: The following manufacturers and their products are acceptable.
1. 3M (No. 5633K, with 3M No. 31145 long-barrel lugs, two-hole for NEMA standard pattern)
2. Raychem (No. HVT-152-SG Kit, with HVS-EG External Grounding/Shield Interrupting Kit and T&B No. 54479 long-barrel lugs, two-hole for NEMA standard pattern)
3. Kerite (No. T-4058 Terminating Kit, with T&B No. 54479 long-barrel lugs, two-hole for NEMA standard pattern)
4. Or Approved Equal

2.4 CABLE SPLICES

A. Manufacturers: The following manufacturers and their products are acceptable.
1. 3M (No. 5502-CI-4/0 for inline splices, No. 5719 for Tee splices)
2. Kerite (No. S-3066 Splice Kit, with T&B No. 54012 splicer)
3. Raychem (No. HVS-823S, with HVS-EG External Grounding/Shield Interrupting Kit and T&B No. 54012 Splicer)
4. Or Approved Equal

2.5 TESTING BY CONTRACTOR

1. Ensure that the cable is tested at the manufacturer's facility prior to shipping.

2. The testing shall be performed in accordance with AEIC CS-6, Parts D, E, F and L, under the conditions specified in Part G.
3. The partial discharge test shall be performed in accordance with AEIC CS-6, Part F. An X-Y recording graph shall be included with the certified test reports clearly showing the corona test results for each identified length of cable.
4. A hot impulse test, performed in accordance with AEIC CS-6, Part L.1.3, shall be made on representative samplings of the cable supplied under this specification. Complete documentation of the results shall be included in the final test report package.
5. Provide certified test reports to the Owner within two (2) working weeks after the completion of the testing program. Furnish in accordance with AEIC CS-6, Parts G.2.3 and G.2.4.
6. The Owner reserves the right to witness the cable tests at the manufacturer's facility. Notify the Owner of the impending tests at least 10 Business days prior to the tests.
7. Inasmuch as the requirements of AEIC CS-6 form a part of this specification, written verification of the testing procedures performed during production shall be required of the manufacturer and/or distributor prior to factory acceptance of the cable purchased under this specification. The minimum acceptable list of procedures can be found in Appendix 3 of AEIC CS-6.I

2.6 IDENTIFICATION

A. The cable protective jacket shall have an indelible, roll-marked legend applied at least every 24 inches stating the following:
   1. Manufacturer
   2. Insulation thickness
   3. Conductor size
   4. Conductor material
   5. Rated voltage
   6. Insulation level
   7. Type
   8. Year of manufacture

B. Comply with AEIC CS-6, Part H.

2.7 DELIVERY AND INSPECTION

A. Submit guaranteed quantity delivery schedules prior to commencing work.

B. Contractor shall inspect the cable with the installation sub-contractor prior to installation and shall perform the necessary tests to verify that the cable meets the characteristics and performance parameters as tested at the manufacturer's facility prior to shipment to the job site.

C. Owner reserves the right to inspect and/or test the cable independently to verify compliance with this specification. Any repairs or replacement of the cable necessary to attain compliance with this specification shall be at the Contractor's expense.

D. Packing, Sealing and Shipping
   1. Place the cable on the reels so that it will be protected from damage during shipment. Firmly and properly secure each end of the cable to the reel. Take precautions to prevent the loosening of reeled cable.
   2. Prevent the ingress of moisture into the cable prior to shipping. Durably seal each end of the cable prior to shipment to prevent the ingress of moisture during shipment and later storage. If the conductor exhibits signs of slight corrosion but no pitting, Contractor shall verify that cable was properly dried and retested prior to shipping, at no additional cost to the Owner.
   3. Ship each identified length of cable on a separate reel.
   4. Lag or otherwise suitably cover the reel(s) with suitable material to provide physical protection for the cable(s) during transit and ordinary storage and handling operations.

E. Reels
   1. The minimum diameter of the drum of the shipping reel shall be at least that prescribed in NEMA WC 26.
   2. Protect the inner or drum end of the reel to avoid damage to the cable or environmental end seal.
   3. Markings: Each reel shall have a legend stating: "DO NOT LAY FLAT"
   4. Manufacturer's name
   5. Reel number per purchase order
   6. Length of cable on reel
   7. Type cable, size, rating, and year of manufacture
   8. Purchase order number
   9. Delivery address as specified in purchase order

2.8 INSTALLATION SUPPORT SERVICES

A. Manufacturer shall submit recommendations for maximum pulling tensions and sidewall pressures to the Owner for review upon delivery of cable to job site. Provide these at no extra cost.

PART 3 EXECUTION

3.1 EXAMINATION

A. Verify that raceway system is installed and ready to receive cable.

B. Pull an appropriately sized conduit mandrel completely through the installed duct(s) to ensure that duct is suitable for pulling intended cables without damage.

C. Beginning of installation means installer accepts existing conditions.

3.2 PREPARATION

A. Use a lubricated swab behind a mandrel to clean conduits and ducts before pulling cables.

B. Install new or relocated existing cable racks with porcelain insulators in manholes, vaults, or pull boxes as necessary to support cables.

C. Coordinate the installation of the cables under this specification with the Owner.

3.3 INSTALLATION

A. Install cables, terminations and splices in accordance with manufacturer's instructions and ANSI/IEEE C2.

B. Avoid abrasion and other damage to cables during installation.

C. Use suitable lubricants and pulling equipment. Do not exceed cable pulling tensions nor bending radius restrictions.

D. Ground cable shield at each termination and/or splice.

E. Install cables in manholes along wall providing longest route. Arrange cables in manholes to avoid interference with duct entrances.

F. Provide at least one full 360-degree coil wrapped around the interior of the manhole from entrance to exit, racked appropriately, to allow for splicing, tapping and/or cable movement.

G. Install the three cables of a three-phase circuit in a triangular configuration on the cable racks - two of the cables on the porcelain rack insulators and the third nestled in the groove formed by the bottom two cables. Securely bind the cables (use plastic ties) at each rack to secure them in place.

H. Identify all cables in accessible locations per ANSI/IEEE C2-341 (B) (3).

3.4 MANUFACTURER'S FIELD SERVICES

A. Manufacturer shall provide a qualified cable installation engineer to witness the cable installation. This person(s) shall be responsible for verifying that the cable is installed within the manufacturer's recommended tolerances for installation limits. Provide these services as a part of the bid proposal.

3.5 PROTECTION

A. Protect installed cables from entrance of moisture.

B. Do not handle with mechanized equipment such that the lifting forks will come into contact with the cable or that the weight of the cable/reel will rest on the lifting forks or any other handling medium.

C. During the installation process, protect the cable jacket from abrasion or scuffing damage by the use of suitable cable pulling equipment.

3.6 FIELD QUALITY CONTROL

A. Field inspection and test shall be performed under provisions of NETA ATS section 7.3 (3) – Medium Voltage Cables, as follows.

B. Visual and Mechanical Inspection
1. Compare cable data with Contract Documents
2. Inspect exposed sections of cable for physical damage,
3. Inspect all bolted electrical connections for high resistance using one of the following methods:

   a. Use of low-resistance ohmmeter in accordance with NETA ATS Section 7.3.3.2 (Electrical Tests).
   b. Verify tightness of accessible bolted electrical connections by calibrated torque-wrench method in accordance with manufacturer's published data or NETA ATS Table 10.12.
4. Inspect compression-applied connectors for correct cable match and indention.
5. Inspect for shield grounding, cable support, and termination.
6. Verify that visible cable bends meet or exceed ICEA and/or manufacturer's minimum allowable bending radius.
7. Inspect fireproofing in common cable areas, if specified.
8. If cables are terminated through window-type current transformers, make an inspection to verify that neutral and ground conductors are correctly placed and that shields are correctly terminated for operation of protective devices.
9. Inspect condition of cable jacket and insulation
10. Inspect cable for correct identification, arrangement and connections.

C. Electrical Tests
1. Perform a shield-continuity test on each power cable by ohmmeter method.
2. Perform an insulation-resistance test utilizing a meg-ohmmeter with a voltage output of at least 2,500 volts. Individually test each conductor with all other conductors and shields grounded. Test duration shall be one minute.
3. Perform resistance measurements through all bolted connections with low-resistance ohmmeter.
4. Perform a dc high-potential test on all cables. Adhere to all precautions and limits as specified in the applicable NEMA/ICEA Standard for the specific cable. Perform tests in accordance with ANSI/IEEE 400. Test procedure shall be as follows, and the results for each cable test shall be recorded as specified herein. Test voltages shall not exceed 80 percent of cable manufacturer's factory test value or the maximum test voltage in NETA ATS Table 10.6.

a. Insure that the input voltage to the test set is regulated.
b. Current-sensing circuits in test equipment shall measure only the leakage current associated with the cable under test and shall not include internal leakage of the test equipment.
c. Record wet- and dry-bulb temperatures or relative humidity and temperature.
d. Test each section of cable individually.
e. Individually test each conductor with all other conductors grounded. Ground all shields.
f. Terminations shall be adequately corona-suppressed by guard ring, field reduction sphere, or other suitable methods as necessary.
g. Insure that the maximum test voltage does not exceed the limits for terminators specified in ANSI/IEEE 48, IEEE 386, or manufacturer's specifications.
h. Apply a dc high-potential test in at least five equal increments until maximum test voltage is reached. No increment shall exceed the voltage rating of the cable. Record dc leakage current at each step after a constant stabilization time consistent with system charging current.
i. Raise the conductor to the specified maximum test voltage and hold for 15 minutes on shielded cable and five minutes on non-shielded cable. Record readings of leakage current at 30 seconds and one minute and at one-minute intervals thereafter.
j. Reduce the conductor test potential to zero and measure residual voltage at discrete intervals.
k. Apply grounds for a time period adequate to drain all insulation stored charge.
l. When new cables are spliced into existing cables, the dc high-potential test shall be performed on both the existing and new cable prior to splicing in accordance with NETA ATS 7.3.2. After test results are approved for both the existing and new cable and the splice is completed, an insulation-resistance test and a shield-continuity test shall be performed on the length of existing and new cable including the splice. After a satisfactory insulation-resistance test, a dc high-potential test shall be performed on the cable utilizing a test voltage acceptable to the Owner and not exceeding 60 percent of factory test value.

D. Test Values
1. Compare bolted connection resistance to values of similar connections.
2. Bolt-torque levels should be in accordance with NETA ATS Table 10.12 unless otherwise specified by manufacturer.
3. Micro-ohm or milli-volt drop values shall not exceed the high levels of the normal range as indicated in the manufacturer's published data. If manufacturer's data is not available, investigate any values which deviate from similar connections by more than 50 percent of the lowest value.
4. Shielding shall exhibit continuity. Investigate resistance values in excess of ten ohms per 1,000 feet of cable.

5. Graphic plots shall be made of leakage current versus step voltage at each increment and leakage current versus time at final test voltages.

    a. The step voltage slope should be reasonably linear.
    b. Capacitive and absorption current should decrease continually until steady state leakage is approached.

END OF SECTION

SECTION 16123

600-VOLT POWER CONDUCTORS AND CABLES

PART 1 GENERAL

1.1 SUMMARY

A. This section includes building wire and cable, service entrance cable, control cables, wiring connectors and connections.

B. All circuit wiring and cables shall be installed in conduit. This includes power, lighting, fire alarm, Tel/Data and security cables.

1.2 REFERENCES

A. ASTM B 8 Concentric-Lay-Stranded Copper Conductors, Hard, Medium-Hard, or Soft

B. ANSI/IEEE C 2 National Electrical Safety Code

C. IEEE 242 Recommended Practice for Protection and Coordination of Industrial and Commercial Power Systems.

D. IEEE 399 Recommend Practice for Industrial and Commercial Power System Analysis.

E. NECA (National Electrical Contractors Association) - Standard of Installation.

F. NEMA WC-26 Wire and Cable Packaging

G. NETA ATS National Electrical Testing Association Acceptance Testing Specifications for Electrical Power Distribution Equipment and Systems.

H. NFPA 70 NEC.

I. UL 83 Thermoplastic-Insulated Wires and Cables.

J. UL 486A Wire Connectors and Soldering Lugs for Use with Copper Conductors.

K. UL 510 Polyvinyl Chloride, Polyethylene and Rubber Insulating Tapes.

1.3 SYSTEM DESCRIPTION

A. The applications for required cable, wire, and connectors include, but are not limited to:
   1. Power distribution circuitry.
   2. Lighting circuitry.
   3. Appliance and equipment circuitry.
   4. Wiring for motors of mechanical equipment

5. Wiring from the motor(s) of mechanical equipment to the disconnect switches or junction boxes, including wiring for pushbuttons, pilot lights, interlocks and similar devices as directed, shown, or specified.
6. Wiring from the motors of mechanical equipment to motor starters, including other auxiliary wiring as may be required, directed, or shown.
7. Line voltage wiring as required by other Divisions 2 thru 15, and interlocking to motor starters.
8. Control wiring for motors, mechanical equipment, relays and switches, and similar mechanical-electrical devices.
9. Line voltage wiring to thermostats, alarm system components, security system components and other miscellaneous equipment.

1.4 PROJECT CONDITIONS

A. All wire and cables shall be minimum No. 12 AWG copper conductor unless otherwise indicated.

B. All conductor sizes are based on copper.

C. Wire and cable routing indicated is diagrammatic unless dimensioned.

D. Route wire and cable as required to complement project conditions.

E. The Contractor shall be responsible for any and all raceways and raceway/cable supports in accordance with all other sections of these Specifications.

1.5 REGULATORY REQUIREMENTS

A. Furnish products listed and classified by UL, ETL, or other recognized, acceptable testing and listing agencies as suitable for the purpose specified and shown.

1.6 SUBMITTALS

A. Product Data:
   1. Building wire and cables.

B. Field Test Report:
   1. Measure overall insulation resistance to ground. Provide certified test report.

1.7 CLOSEOUT SUBMITTALS

A. Submit final certified test reports of all insulation resistance tests.

1.8 DELIVERY, STORAGE, AND HANDLING

A. Accept cable and accessories on Site in manufacturer's packaging. Inspect for damage.

B. Store and protect cable and accessories from the environment in accordance with manufacturer's published instructions. Provide adequate heating and ventilation to prevent condensation.

C. Damaged items shall be replaced at no additional cost to Owner.

1.9 COORDINATION

A. Where wire and cable destination is indicated and routing is not shown, determine exact routing and lengths required.

B. Wire and cable routing indicated is approximate unless dimensioned. Include wire and cable lengths within 10 feet of length shown.

PART 2 PRODUCTS

2.1 MANUFACTURERS:

A. Building Wire and Cable
1. American Wire and Cable.
2. Cerro Wire and Cable Co.
3. General Cable Corp.
4. Okonite Co.
5. Or Approved Equal.

2.2 BUILDING WIRE AND CABLE

A. Building wire and cable shall be UL83 compliant, insulated, single conductor, copper, solid or stranded, rated for 600-volts AC. The insulation shall be thermoplastic material rated for 90 degrees Celsius, THW, THHN/THWN, RHW or XHHW, per ANSI/NFPA 70.

B. For Interior Dry Location: Use only building wire, THHN/THWN insulation rated 90 degree Celsius, in raceway.

C. For Exterior Wet or Dry Locations: Use only XHHW insulation rated for 90 degree Celsius, in raceway.

D. For Underground Dry or Wet Locations: Use only XHHW insulation rated 90 degree Celsius, in raceway.

E. For connections to electrical equipment, coordinate wire type with equipment manufacturer.

2.3 SERVICE ENTRANCE CABLES

A. Service entrance cables shall be insulated, single conductor, copper, stranded, rated for 600-volts AC, type XHHW insulation.

B. Overhead Service entrance cables shall be insulated, single conductor, copper, stranded, rated for 600-volts AC, type SE insulation.

2.4 WIRING CONNECTORS

A. Split Bolt Connectors:
   1. FCI Burndy Corp.
   2. Cooper Crouse Hinds.
   3. O.Z./Gedney Co.
   4. Thomas & Betts Co.
   5. 3-M Co.
   6. Or Approved Equal.

B. Solderless Pressure Connectors:
   1. FCI Burndy Corp.
   2. Ideal Industries Co.
   3. Thomas & Betts Co.
   4. 3-M Co.
   5. Or Approved Equal.

C. Spring Wire Connectors:
   1. Ideal Industries Co.
   2. 3-M Co.
   3. Or Approved Equal.

D. Compression Connectors:
   1. FCI Burndy Corp.
   2. Thomas & Betts Co.
   3. 3-M Co.
   4. Or Approved Equal.

2.5 WIRE COLOR CODE

A. Color-code all conductors:
   1. Wire sizes No. 10 AWG and smaller shall have integral color-coded insulation.
   2. Wire sizes No. 8 AWG and larger may have black insulation but shall be identified by color-coded electrical tape at all junction, splice, pull, or termination points.
   3. Color tape shall be applied to at least 3 inches of the conductor at the termination ends and in junction or pull boxes or where readily accessible.
   4. Conductors for all systems shall not change color at splice points.
   5. Where there are two or more neutrals in one conduit, each shall be individually identified with the proper circuit.
   6. For No. 4 AWG and larger ground conductors, identify with green tape at both ends and all visible points, included in all junction boxes.

B. Each phase wire shall be uniquely color-coded as indicated below:
   1. 120/240-Volts

      a. Phase A – Black
      b. Phase B – Red
      c. Neutral - White
      d. Ground - Green

2. 120/208-Volts

    a. Phase A – Black
    b. Phase B – Red
    c. Phase C – Blue
    d. Neutral – White
    e. Ground – Green
3. 277/480-Volts

    a. Phase A - Brown
    b. Phase B - Orange
    c. Phase C – Yellow
    d. Neutral - White or Natural Gray
    e. Ground – Green
4. Isolated Grounds: Green with Yellow Stripes

PART 3 EXECUTION

3.1 EXAMINATION

A. Verify that interior of building has been protected from weather.

B. Verify that mechanical work likely to damage wire and cable has been completed.

C. Verify that raceway installation is complete and supported as required by the specifications.

3.2 PREPARATION

A. Test raceway with a mandrel and thoroughly swab out to remove foreign material before pulling cables.

B. For conduits sizes less than 3 inches, draw a stiff bristle brush through until conduit is clear of particles of earth, sand and gravel.

C. For conduits sizes 3 inches and larger, draw a flexible testing mandrel approximately 12 inches long with a diameter less than the inside diameter of the conduit through the conduit. Then draw a stiff bristle brush through until conduit is clear of particles of earth, sand and gravel.

3.3 EXISTING WORK

A. Disconnect and remove exposed and/or abandoned wire and cable. Patch surfaces where removed cable pass through building finishes.

B. Disconnect abandoned circuits and remove wire and cable. Remove abandoned boxes if wire and cable servicing them is abandoned and/or removed. Provide blank cover for abandoned boxes that are not removed.

C. Ensure access to existing wiring connections which remain active and which require access. Modify installation or provide access panel as appropriate.

D. Extend existing circuits using materials and methods and compatible with existing electrical installations, or as otherwise specified.

E. Tag and repair existing wire and cable that remain or are being reused.

3.4 INSTALLATION

A. General:
1. Install wire and cable in accordance with manufacturer's instructions and NECA "Standard of Installation".
2. Route wire and cable as required to meet project conditions.
3. Identify and color code wire and cable. Identify each conductor with its circuit number or other designation indicated.
4. Protect exposed cable from damage.
5. Pull all conductors into raceway at same time.
6. Use suitable wire pulling lubricant for building wire No. 4 AWG and larger. Lubricant shall not be deleterious to the cable sheath, jacket or outer covering.
7. Do not exceed cable manufacturer's recommended pulling tension limits when installing wire or cable.
8. Support cables above accessible ceiling using standard support methods to support cables from structure. Do not rest cable on ceiling panels.
9. Neatly train and lace wiring inside boxes, equipment, and panelboards

B. Cable and Wire Size:
1. Conductor sizes are based on copper unless specifically indicated as aluminum or "AL".
2. Use conductor no smaller than No. 12 AWG for power and lighting circuits.
3. Use conductor no smaller than No. 14 AWG for control circuits.
4. Use No. 10 AWG conductors for 20 ampere, 120-volt branch circuits longer than 75 feet.
5. Use No. 10 AWG conductors for 20 ampere, 277-volt branch circuits longer than 200 feet.
6. Use stranded conductor for all feeders, branch and control circuits.

C. Cable Identification
1. Identify all wires and cables as required in these Specifications.

D. Special Techniques - Wiring Connections:
1. Clean conductor surfaces before installing lugs and connectors. Where an anti-oxidation lubricant is used, apply liberally, coating all exposed conductor surfaces.
2. Use suitable cable fittings and connectors.
3. Make splices, taps, and terminations to carry full ampacity of conductors with no perceptible temperature rise.
4. Use split bolt connectors for copper conductor splices and taps, No. 8 AWG and larger.
5. Use solderless pressure connectors with insulating covers for copper conductor splices and taps, No. 8 AWG and smaller.
6. Tape un-insulated conductors and connector with two layers of half-lapped rubber insulating compound tape and two layers of half-lapped, 7-mil electrical tape, Scotch 33+, or Approved Equal.
7. Use insulated spring wire connectors with plastic caps for copper conductor splices and taps, No. 10 AWG and smaller.

8. Stranded conductors for control circuits shall have ring terminals crimped on for all device terminations. Bare stranded conductors shall not be placed directly under the screws.

3.5 FIELD QUALITY CONTROL

A. Field inspection and test shall be performed under provisions of NETA ATS section 7.3 (2) - Low Voltage Cables, 600-Volt Maximum as follows.

1. Visual and Mechanical Inspection:

    a. Compare cable data with drawings and specifications.
    b. Inspect exposed sections of cable for physical damage and correct connection in accordance with single-line diagram.
    c. Inspect all bolted electrical connections for high resistance using one of the following methods:
        1) Use of low-resistance ohm-meter in accordance with NETA ATS section 7.3.2.2 (Electrical Tests).
        2) Verify tightness of accessible bolted electrical connections by calibrated torque-wrench method in accordance with manufacturer's published data from NETA ATS Table 10.12.

    d. Inspect compression-applied connectors for correct cable match and indentation.
    e. Verify cable color coding with applicable specifications and NEC.

2. Electrical Tests

    a. Perform insulation-resistance test on each conductor with respect to ground and adjacent conductors. Applied potential shall be 500 volts dc for 300 volt rated cable and 1000 volts dc for 600 volt rated cable. Test duration shall be one minute.
    b. Perform resistance measurements through all bolted connections with low-resistance ohmmeter, if applicable, in accordance with NETA ATS Section 7.3.2.1 (Visual and Mechanical Inspection).
    c. Perform continuity test to insure correct cable connection.
    d. Correct malfunctions and/or deficiencies immediately as detected at no additional cost to the Owner, including additional verification testing.
    e. Subsequent to final wire and cable terminations, energize all circuitry and demonstrate functional adequacy in accordance with system requirements.

3. Test Values

    a. Compare bolted connection resistance to values of similar connections.
    b. Bolt-torque levels should be in accordance with NETA ATS Table 10.12 unless otherwise specified by the manufacturer.
    c. Micro-ohm or milli-volt drop values shall not exceed the high levels of the normal range as indicated in the manufacturer’s published data. If manufacturer’s data is not available, investigate any values which deviate from similar connections by more than 50 percent of the lowest value.
    d. Minimum insulation-resistance values should not be less than 50 meg-ohms.
    e. Investigate deviations between adjacent phases.

END OF SECTION

SECTION 16126
MEDIUM VOLTAGE TESTING & PREVENTIVE MAINTENANCE

PART 1 GENERAL

1.1 SUMMARY

A. The extent of new and existing electrical systems and equipment requiring testing and preventive maintenance (PM) is shown on the drawings and is specified herein and in other individual sections of work. The general scope of PM includes the following items:
   1. Existing 12 kV Distribution Switchgear.
   2. New 12 kV oil-filled pad-mount transformers (testing only).
   3. New 12 kV feeder circuit conductors.

1.2 RELATED SECTIONS

A. Section 16121 - Medium Voltage Cables

B. Section 16271 - Liquid Filled Transformers

1.3 REFERENCES

A. All inspections and field tests shall be in accordance with the latest edition of the following codes, standards, and specifications except as provided otherwise herein.
   1. Insulated Cable Engineers Association – ICEA
   2. NFPA 70 National Electrical Code (NEC).
   3. NFPA 70E Standard for Electrical Safety in the Workplace, 2009 Edition.
   4. National Electrical Manufacturer's Association - NEMA
   5. Occupational Safety and Health Administration – OSHA
   6. State and local codes and ordinances
   7. Underwriters Laboratories, Inc. – UL
   8. IEEE 400 Guide for Field Testing and Evaluation of the Insulation of Shielded Power Cable Systems.
   9. IEEE 400.3 IEEE Guide for Partial Discharge Testing of Shielded Power Cable Systems in a Field Environment

1.4 SUBMITTALS AND TEST REPORTS

A. Provide written test reports, signed and dated, for all tests prior to acceptance of the tested equipment by the Owner. Test reports on megger, dielectric absorption and high potential tests shall include the ambient temperature and relative humidity existing at the time of the tests.

B. Hi potential test results shall be submitted to the Owner for review before proceeding with the Partial Discharge Testing.

C. Documentation of responsible technician Certification.

1.5 QUALITY ASSURANCE

A. All testing of new equipment and cables and PM related testing shall be conducted by a qualified Electrical Testing Firm.
   1. The Electrical Testing Firm shall provide the necessary material, equipment, labor, and technical supervision to perform the inspections and tests described herein.
   2. The Electrical Testing Firm shall be an independent, third party, testing organization which can function as an unbiased testing authority, professionally independent of the manufacturers, suppliers, and installers of equipment or systems evaluated by the testing organization.
   3. The Electrical Testing Firm shall be regularly engaged in the testing of electrical equipment devices, installations, and systems, shall have a minimum of 3 years field experience in Online Partial Discharge testing of MV cables, and shall have completed at least 100 - Online Partial Discharge MV cable testing projects.
   4. The Electrical Testing Firm shall utilize engineers and technicians that are experienced and regularly perform electrical power system testing and have received training and certification in accordance with NETA.
   5. Accepted certifications:
      a. Certified Technician/Level III
      b. Certified Senior Technician/Level IV
   6. Personnel performing partial discharge testing and inspections shall be trained and certified to perform online partial discharge testing on cable systems. These individuals shall be capable of conducting the tests in a safe manner and with complete knowledge of the hazards involved. They must evaluate the test data and make an informed judgment regarding the cable circuits tested.

B. Qualified Firms:
   1. Industrial Tests, Inc.
      4021 Alvis Court, Suite 1
      Rocklin, CA 95677
      Phone 916-632-8378
   2. Electrical Reliability Services, Inc. / Div. of Emerson Process Solutions
      6900 Koll Center Parkway, Suite 415
      Pleasanton, CA 94566
      Phone 530-758-2410
   3. Power Systems Testing Co.
      2267 Claremont Court
      Hayward, CA 94545
      Phone: 510-783-5096
   4. Or Approved Equal

C. Furnish products listed and classified by UL, ETL, or other recognized, approved testing and listing agencies as suitable for the purpose specified and shown.

PART 2 PRODUCTS

Not Used

PART 3 EXECUTION

3.1 VISUAL INSPECTIONS

A. Prior to any testing, perform visual inspections to verify the following:
   1. The equipment is completely and properly installed.
   2. The equipment is free from damage and defects.
   3. Shipping blocks and restraints have been removed.
   4. Electrical terminations have been properly tightened.
   5. The equipment has been properly aligned.
   6. The equipment has been properly lubricated.
   7. The ventilation louvers are open and unobstructed.
   8. The equipment is ready to be tested.

3.2 MANUAL OPERATION

A. Prior to any testing, mechanical devices shall be exercised or rotated manually to verify that they operate properly and freely.

3.3 PRIMARY CABLE TESTS

A. New primary cable provided under this contract shall be tested as indicated in these Specifications after installation and before splicing.

B. When new primary cable (15KV) is provided under this contract and spliced to existing primary cable on this project, the complete new primary cable and existing primary cable shall be given a complete Partial Discharge Test after all splices are completed and tested as indicated below.

C. After splices are complete a DC Hi Pot test shall be performed prior to the Partial Discharge Test.

D. This Hi Pot test shall be a 5KV test in 1KV increments holding for two minutes up to the 5KV max. At 5KV the cable shall be soaked for 10 minutes with no appreciable loss of leakage current.

3.4 ONLINE PARTIAL DISCHARGE TESTING SPECIFICATION

A. Objective:
   1. The purpose for this project is to develop data that will assist in assessing the condition of the medium voltage cable systems. Data collected during this project shall be of a nature that will enable data trending to assess degradation over time.

2. Since it is impractical to remove the medium voltage cable circuits from service for the purpose of performing condition assessment testing, this project and all associated work shall be done while the cables, accessories and all parts of the electrical system remain in service and energized.

B. The scope of Partial Discharge (PD) Testing to be performed by the qualified Electrical Testing Firm includes:
   1. Perform partial discharge testing on each of the combined new and existing cable circuits as indicated on the Primary Single Line Diagram.
   2. Perform the work while the medium voltage circuits and equipment remain in service and energized. The cable circuits shall not be disconnected or de-energized and the testing shall not expose the cables to voltages that exceed normal operating voltage.
   3. Use a time or frequency domain detection process incorporating radio frequency current transformer (RF CT) sensors. The detection system shall have a PD detection range that at least covers the frequency range of 10khz to 300Mhz. The testing shall be performed in a manner that complies with the requirements of:

      a. IEEE 400.
      b. IEEE 400.3.
      c. Provide a comprehensive report that identifies numerically and graphically the magnitude of partial discharge detected for each circuit and each cable section tested. The report shall provide commentary regarding the significance of the PD detected and shall also provide conclusions and recommendations for corrective action as appropriate. In addition, the test report shall include the following:
         1) Summary of project
         2) Description of circuits and cable sections tested
         3) Identification of the testing organization
         4) Identification of the test equipment used
         5) Date work was performed
         6) Identification of the person that performed the tests

3.5 MEDIUM VOLTAGE LIQUID FILLED TRANSFORMERS

A. Inspect physical and mechanical condition.

B. Inspect anchorage, alignment, and grounding.

C. Verify the presence of PCB labeling, if applicable.

D. Clean bushings and control cabinets.

E. Verify correct liquid level in tanks and bushings.

F. Verify that positive pressure is maintained on gas-blanketed transformers.

G. Remove a sample of insulating liquid in accordance with ASTM D 923. The sample shall be tested for the following:
   1. Dielectric breakdown voltage: ASTM D 877 and/or ASTM D 1816
   2. Acid neutralization number: ANSI/ASTM D 974
   3. Interfacial tension: ANSI/ASTM D 971 or ANSI/ASTM D 2285
   4. Color: ANSI/ASTM D 1500
   5. Visual Condition: ASTM D 1524
   6. Water in insulating liquids: ASTM D 1533
   7. Measure power factor or dissipation factor in accordance with ASTM D 924

H. Remove a sample of insulating liquid in accordance with ASTM D 3613 and perform dissolved-gas analysis (DGA) in accordance with ANSI/IEEE C57.104 or ASTM D3612.

3.6 SAFETY AND PROCEDURAL REQUIREMENTS

A. Safety and Precautions
   1. Safety practices that shall be followed include, but are not limited to, the following:

      a. Occupational Safety and Health Act
      b. Accident Prevention Manual for Industrial Operations, National Safety Council
      c. Applicable state and local safety operating procedures
      d. Owner's safety practices
   2. Perform all testing work in accordance with the applicable codes and standards of the following agencies except as provided otherwise herein:

      a. NETA ATS: and/or NETA MTS.
      b. National Fire Protection Association - NFPA
         1) ANSI/NFPA 70: National Electrical Code
         2) ANSI/NFPA 70B: Recommended Practice for Electrical Equipment Maintenance
         3) NFPA 70E: Electrical Safety Requirements for Employee Workplaces

B. TEST INSTRUMENTS
   1. All test equipment shall be in good mechanical and electrical condition.
   2. The electrical testing firm shall have a calibration program that assures that all applicable test instruments are maintained within rated accuracy.
   3. The accuracy shall be directly traceable to the National Institute of Standards and Technology (NIST).
   4. Instruments shall be calibrated in accordance with the following frequency schedule:

      a. Field instruments: Analog and Digital, 12 months maximum
      b. Laboratory instruments: 12 months
      c. Leased specialty equipment: 12 months where accuracy is guaranteed by lessor

5. Dated calibration labels shall be visible on all test equipment or calibration certification shall be included in the project report discussed above.
6. Records, which show date and results of instruments calibrated or tested, shall be kept up-to-date.
7. Up-to-date instrument calibration instructions and procedures shall be maintained for each test instrument.
8. The calibrating standard shall be of higher accuracy than that of the instrument tested.

C. DIVISION OF RESPONSIBILITY
1. The Electrical Testing Firm shall notify the Owner immediately upon the discovery of any Owner electrical equipment that is defective, dangerous or obviously unreliable.
2. The Electrical Testing Firm will be supplied with the following for the purposes of completing this project:

   a. Accurate single-line schematic and physical layout drawings identifying each cable circuit to be tested
   b. Security clearance and access to each point of attachment where PD measurements will be made
   c. At least one full-time and qualified site representative to accompany the Electrical Testing Firm personnel to ensure access and security issues are resolved in a timely manner and to ensure identification and adherence to any facility-specific safety and procedural requirements

3.7 POWER CABLE TESTS

A. Perform a continuity check and a 1,000 volt DC megger test on 600 volt power cables No. 4 AWG and larger.
1. The megger test shall be performed between each pair of conductors and from each conductor to ground.
2. The megger test shall be performed for 15 seconds or until the insulation resistance value stabilizes.
3. The insulation resistance between conductors and from each conductor to ground shall be 100 megohms minimum in one minute or less. In addition, the lowest insulation resistance value shall not differ from the highest value by more than 20 percent.

B. CONTROL CABLE TESTS
1. Perform a continuity check on control and Instrumentation wiring.

C. GROUNDING TESTS
1. Measure the resistance to ground of each ground rod before connection to the other ground rods. The resistance shall not exceed 10 ohms.
2. Measure the resistance to ground of the total ground system with all connections completed. The resistance shall not exceed 2 ohms for primary services or 5 ohms for secondary services.

3. Tests of the resistance to ground shall be made using either the three point method or the fall-of-potential method.
4. Perform a continuity check from equipment ground bus bars and ground lugs to the ground system.

3.8 SUPPLEMENTARY SPECIFICATION FOR ENERGIZING OIL FILLED TRANSFORMERS RATED 15KV OR LESS

A. Notify Owner 10 Business days in advance of energizing any new transformer. The Owner at its option may witness this procedure.

B. It is Contractor's responsibility when operating over current protective devices (and taking voltage readings with electrical measuring instruments where needed) to wear the proper Protective Clothing (Arc Flash) for the system being worked on.

C. Confirm that the protective device on the primary side of the transformer is open and locked out and tagged out.

D. Ensure there are no grounds connected to any of the transformer primary or secondary conductors.

E. Ensure all primary and secondary conductors at the Transformer are connected and torqued to the correct level.

F. Confirm that the transformer is properly grounded to the specified grounding system.

G. Confirm that the primary conductors have been connected and torqued to the correct level.

H. Confirm that the secondary conductors have been connected to the correct equipment on the secondary side and that the conductors are connected and torqued to the correct level.

I. Ensure that all the protective devices on the secondary side (Main Circuit Breaker and Feeder Circuit Breakers) are open.

J. Ensure that the transformer is filled with oil to the correct level.

K. After confirming items 1 through 10 have been completed proceed as follows.

L. Clear the area surrounding the transformer to be energize and remove the locked out and tagged primary protective notice.

M. Wearing the proper protective clothing as stated above:
1. Close the primary protective device to the transformer.
2. With the primary protective device closed to the transformer the transformer should be energized (audible humming) indicating magnetizing current.

3. If phase rotation is essential to the correct operation of the secondary equipment this should be checked at this point. If necessary open the primary protective device and make the necessary corrections and re-energize.
4. If all the above Items are completed proceed as follows,

N. Wearing the proper protective clothing as stated above:
1. Confirm the correct voltage is available on the Secondary Side of the Transformer
2. Close the Main Secondary Circuit Breaker
3. It is the Contractor's responsibility to ensure all conductors connected after the Main Secondary Circuit Breaker has been checked for continuity and are free of any grounds before closing any secondary protective devices.

END OF SECTION

SECTION 16128

RACEWAYS AND BOXES

PART 1 GENERAL

1.1 SUMMARY

A. Section includes conduit and tubing, surface and buried raceways, wireways, outlet boxes, pull boxes, junction boxes, hand holes and concrete manholes.

1.2 RELATED SECTIONS

1. Section 16060: Grounding and Bonding for Electrical Systems

1.3 REFERENCES

A. ANSI C80.1 Rigid Steel Conduit, Zinc Coated.

B. ANSI C80.3 Electrical Metallic Tubing, Zinc Coated.

C. ANSI C80.6 American National Standard for Electrical Intermediate Metal Conduit.

D. ASTM A 48 Standard Specification for Grey Iron Castings.

E. NECA Standard of Installation.

F. NEMA FB 1 Fittings, Cast Metal Boxes, and Conduit Bodies for Conduit and Cable Assemblies.

G. ANSI/NEMA OS 1 Sheet-steel Outlet Boxes, Device Boxes, Covers, and Box Supports.

H. ANSI/NEMA OS 2 Nonmetallic Outlet Boxes, Device Boxes, Covers and Box Supports.

I. NEMA RN 1 Polyvinyl Chloride (PVC) Externally Coated Galvanized Rigid Steel Conduit and Intermediate Metal Conduit.

J. NEMA TC 2 Electrical Polyvinyl Chloride (PVC) Conduit.

K. NEMA TC 3 PVC Fittings for Use with Rigid PVC Conduit and Tubing.

L. NEMA TC 6 Non-Metallic Conduit.

M. NEMA 250 Enclosures for Electrical Equipment (1,000 Volts Maximum).

N. NFPA 70 NEC.

O. UL 1 Flexible Metal Conduit

P. UL 6 Rigid Metal Conduit

Q. UL 514B Conduit, Tubing and Cable Fittings.

R. UL 651 Rigid Non-Metallic Conduit

S. UL 797 Electrical Metallic Tubing

T. UL 1242 Intermediate Metal Conduit

1.4 CONDUIT APPLICATION

A. Acceptable raceway systems and their limitations of use are summarized in the following table:

1.5

Location	**RSC**	**RNC**	**EMT**	**FMC**	**LFMC**
Exterior locations: Wet or subject to physical damage.	Yes	No	No	No	No (note 3)
Exterior locations: Damp and not subject to physical damage.	Yes	No	No	No	Yes
Interior locations: Wet or subject to physical damage.	Yes	No	No	No	No (note 3)
Interior locations: Exposed and not subject to physical damage.	Yes	No	Yes	Yes (note 5)	Yes
Interior locations: Totally concealed.	Yes	No (note 4)	Yes	Yes (note 5)	Yes
Underground:	Yes	Yes	No	No	No

A. Notes for Conduit Application Table:
1. RSC = rigid steel conduit, RNC = rigid nonmetallic conduit, EMT = electrical metallic tubing, FMC = flexible metal conduit, LFMC = liquidtight flexible metal conduit.
2. For the purposes of these specifications, locations subject to physical damage include, but are not limited to, those areas less than 6 feet above the finished floor or grade.
3. Liquidtight flexible metal conduit may also be use in wet or damp, exterior or interior locations not subject to physical damage, where used for flexible equipment connections in lengths not exceeding 3 feet.
4. Rigid nonmetallic conduit may also be used above grade, where totally concealed in walls, for transitions from underground up to a height of 24 inches above the concrete sill.

5. The use of flexible metal conduit is limited to lengths not exceeding 6 feet for flexible connections to equipment and lighting fixtures, or where necessitated by structural obstacles and explicitly approved by the Owner.

1.6 BOX APPLICATION

A. Provide raceway, boxes and manholes located as indicated and at other locations required for splices, taps, wire pulling, equipment connections, and compliance with regulatory requirements and for a complete wiring system.

1.7 CONDUIT SIZE

A. Minimum acceptable conduit sizes are summarized in the following table:

1.8

	Minimum Size
Underground, site wiring	1″
Underground • Building wiring Aboveground • Equipment or panel feeders • Telecommunications	3/4″
Aboveground • Lighting or branch circuit wiring • Fire alarm • Security	1/2″
Other	3/4″

1.9 SUBMITTALS

A. Detailed conduit routing plan as follows:
1. Exposed and/or concealed in building walls for conduits larger than 2-inch outside diameter.
2. All underground conduits (3/4-inch and larger) in duct bank; concealed in floor slabs, equipment pads and concrete slabs.

B. Product Data:
1. Rigid Steel Conduit.
2. PVC Coated galvanized rigid steel conduit.
3. Intermediate steel conduit.
4. Electrical Metallic Tubing (EMT).
5. Flexible metal conduit.
6. Liquid tight flexible metal conduit.

7. Nonmetallic conduit.
8. Raceway fittings.
9. Conduit bodies.
10. Surface raceway.
11. Pull boxes, junction boxes and manholes.

C. Manufacturer's Installation Instructions:
1. Include instructions for storage, handling, protection, examination, preparation, and installation of product.

1.10 CLOSEOUT SUBMITTALS

A. Project Record Documents:
1. Record actual routing of conduits.
2. Record actual locations and mounting heights of outlet, pull boxes, junction boxes and manholes.

1.11 DELIVERY, STORAGE, AND HANDLING

A. Protect conduit from corrosion and entrance of debris by storing above grade. Provide appropriate covering.

B. Protect PVC and PVC-coated metallic conduit from sunlight.

PART 2 PRODUCTS

2.1 CONDUIT

A. Galvanized Rigid Steel Conduit (GRSC or RGS), couplings and elbows shall be hot-dip galvanized, rigid mild steel in accordance with ANSI C80.1 and UL 6. The conduit interior and exterior surfaces shall have a continuous zinc coating with a transparent overcoat of enamel, lacquer, or zinc chromate. Conduit shall be formed with continuous welded seams with a uniform wall thickness, in minimum 10-foot lengths, with threaded ends.

B. Intermediate Metal Conduit (IMC). Raceway shall be hot-dip galvanized mild steel in accordance with ANSI C80.6 and UL 1242 and shall bear the UL label. Conduit shall have same characteristics of rigid steel except for thinner wall.

C. Polyvinyl Chloride (PVC) coated galvanized rigid steel conduit and intermediate metal conduit shall be in accordance with NEMA RN 1. Coating shall be applied under controlled factory conditions. Prior to coating, conduit shall meet requirements of ANSI C80.1 and UL 6 or ANSI C80.6 and UL 1242 as appropriate. PVC coated conduits shall have ultra-violet (UV) inhibitor in the coating material.

D. Electrical Metallic Tubing (EMT). Electrical metallic tubing, including elbows and bends, shall be zinc coated, mild steel in accordance with the requirements of ANSI C80.3 and UL 797. The interior and exterior surfaces of the tubing shall have a continuous zinc coating. Conduit shall

be formed with a continuous welded seam, with a uniform wall thickness, in minimum 10-foot lengths.

E. Flexible Metal Conduit shall be galvanized steel meeting the requirements of UL 1. Flexible aluminum conduit is not permitted.

F. Liquid-Tight Flexible Metal Conduit shall be plastic-jacketed, galvanized steel, "Sealtite" Type EF for general service areas or Type HC for high-temperature when used under raised floor or in air plenums. Conduit shall be UL listed.

G. Non-Metallic Conduit shall be as follows:
   1. Schedule 40: Conduit shall be 90 degree Celsius, polyvinyl chloride in conformance with NEMA TC-2 and UL 651 requirements.
   2. Spacers used in duct bank installations shall be high impact plastic, interlocking bases, and intermediate type spacers. Place spacers between 6 and 10 feet apart.

H. Rigid aluminum, flexible aluminum, or flexible non-metallic conduits shall not be used on this project.

2.2 RACEWAY FITTINGS

A. Couplings and Thread Protectors. Each length of threaded conduit shall be provided complete from the manufacturer with a coupling on one end and a thread protector on the other. The thread protector shall have sufficient mechanical strength to protect the threads during normal handling and storage.

B. Metal Conduit Fittings shall conform to the requirements of UL 514B where this standard applies. Galvanized iron or galvanized steel fittings shall be used with steel conduit. Threaded fittings shall engage a minimum of five threads made up wrench-tight and be compatible with conduit. EMT fittings shall be compression type, UL approved for rain tight applications and setscrew type with insulated throat for indoor applications.

C. Liquid-Tight Flexible Conduit Fittings shall be galvanized steel, T&B 53XX series insulated throat or Approved Equal, and shall bear the UL label. Die-cast malleable fittings are not acceptable.

D. Liquid-Tight Flexible Metal Conduit Fittings shall be galvanized steel similar to T&B “Tite-Bite” or Approved Equal.

E. Non-Metallic Conduit Fittings shall be of same material and strength characteristics as the conduit and shall be solvent welded as recommended by manufacturer. End bells shall be plastic, high impact, tapered to fit. Where conduit transition from non-metallic to metallic is required, provide non-metallic female “terminal” adapter. Non-metallic “male” adapters are not acceptable.

F. Special Fittings. Conduit sealing, explosion proof, dust proof, and other types of special fittings shall be provided as required and shall be consistent with the area and equipment with which they are associated. Fittings installed outdoors or in damp locations shall be sealed

and gasketed. Outdoor fittings shall be of heavy cast construction. Hazardous area fittings and conduit sealing shall conform to NEC requirements for the area classification.

G. Bushings shall be provided for the termination of all conduits not terminated in hubs, couplings or insulated throat connectors. Grounding type insulated bushings with insulating inserts in metal housings shall be provided for conduit 1-1/4 inches and larger. Standard bushings shall be galvanized steel or malleable iron in all sizes.

H. Locknuts. One interior and one exterior locknut shall be provided for all conduit terminations not provided with threaded hubs and couplings. Locknuts shall be designed to securely bond with the conduit to the box when tightened. Locknuts shall be so constructed that they will not be loosened by vibration.

I. Unions. Watertight conduit unions shall be Appleton or Crouse-Hinds Type UNF or UNY, or Approved Equal.

J. Raintight Conduit terminating hubs, where indicated or required by these specifications, shall be Meyer's rigid conduit hubs, or Approved Equal.

2.3 CONDUIT BODIES

A. Malleable iron conduit bodies shall be cast malleable iron with tensile strength meeting ASTM A 48, Class 30A requirements. Malleable conduit bodies shall be finished with an epoxy powder coating. Cover shall be malleable iron with captive screws.

B. All conduit bodies' entrances shall be machined NPT threads with a smooth, rounded, internal conduit stop bushing.

C. All conduit bodies shall be equipped with a sealed and gasketed cover. Cover shall be secured using stainless steel machine screws.

2.4 CONDUIT SUPPORTS

A. Conduit supports shall be furnished and installed in accordance with other section of these specifications. Conduits shall be supported so that fittings are accessible. Support systems shall be limited to electrical conduits only.

B. Hanger rods shall be 3/8-inch diameter galvanized threaded steel rods, minimum. Conduit racks over 18-inch wide, over one level, or supporting 2-inch RSC or larger, shall be 1/2-inch diameter rod minimum.

C. Conduit Clamps. Conduits in single runs or groups of two shall be supported by steel clamps and clamp backs. They shall be galvanized malleable iron or Approved Equal cast ferrous metal for steel conduit or tubing.

D. Support Channels. Supports for banks of three of more conduits shall be constructed of formed steel support channels (Unistrut, Kindorf, Superstrut, B-Line or Approved Equal) with associated conduit or tubing clips. Support channels shall be steel, hot-dip galvanized after fabrication with galvanized steel clips for steel conduit or tubing.

2.5 OUTLET BOXES AND SWITCH BOXES

A. Sheet Metal Outlet Boxes: ANSI/NEMA OS 1, galvanized flat rolled sheet steel outlet wiring boxes of types, shapes and sizes, including box depths, to suit each respective location and installation; construct with stamped knockouts in back and sides, and with threaded screw holes with corrosion-resistant screws for securing box covers and wiring devices.

B. Outlet boxes used in wet outdoor locations, surface mounted shall be cast metal (FS or FD type) with mounting lugs and gasketed covers.

C. Luminaire and Equipment Supporting Boxes: Rated for weight of equipment supported, per NEC requirements.

D. Outlet Box Accessories: Provide outlet box accessories as required for each installation, including mounting brackets, wallboard hangers, extension rings, fixture studs, cable clamps and metal straps for supporting outlet boxes, which are compatible with outlet boxes being used and meeting requirements of individual wiring situations.

2.6 PULL BOXES, JUNCTION BOXES, HANDHOLES AND MANHOLES

A. Sheet Metal Boxes shall be NEMA OS 1, NEMA rating as indicated. Minimum 16 gauge galvanized steel construction with stainless steel hinged cover and neoprene gasket. Cover shall be secured to the body with a continuous, full length, piano type hinge and stainless steel pin on one side and captive screw on the other side. Door shall be equipped with padlock hasp with sealing hole provisions.
   1. Provide #10-32 tapped hole provisions for optional ground lug kit.
   2. Provide 0.375-16 collar studs for mounting optional panel.
   3. Provide external mounting feet for secure wall mounting.
   4. Finish: Wash and phosphate undercoat with ANSI 61 gray polyester power finish.

B. Surface-Mounted Cast Metal Box: NEMA 250, NEMA Type 3R or 4 as indicated, flat-flanged, surface- mounted junction box:
   1. Material: Cast Iron.
   2. Cover: Furnish with ground flange, neoprene gasket, and stainless steel cover screws.

C. Concrete pull boxes, vaults and hand holes for power, lighting, controls and telecommunications shall be pre-cast concrete boxes, sized as indicated. Pull boxes shall be equipped with a concrete cover for non traffic rated locations, orcast-in frame, galvanized steel, adjustable, high impact traffic cover (H-20 load rated), sump, lifting lugs, and conduit knock-outs as indicated. Knockout location and sizes shall be coordinated with the duct bank for each location. Cover shall be engraved with the words - – “POWER”, “LIGHTING”, “CONTROLS”, COMM/DATA”, “TELEPHONE” or similar as applicable.

D. Concrete manholes and/or pull boxes for buried power (MH-P-xx) and control (MH-C-xx) conduits shall be either cast-in-place or pre-cast concrete vault.
   1. Size shall be as indicated.
   2. Pull boxes, Vaults and Manholes shall be equipped with:

a. Galvanized steel covers for non-traffic rated locations and cast-in frame, galvanized steel, adjustable, high impact traffic cover (H-20 load rated) for traffic rated locations.
b. Sump, lifting lugs, conduit knock-outs, pick holes, bolt down holes in cover plate, and pull irons. Knockout location and sizes shall be coordinated with the duct bank for each location. Hot-dip galvanized cable racks shall be provided as required to support the cables in the pull box. Cover shall be engraved with the words "POWER", "LIGHTING", or "CONTROLS" as applicable.

2.7 CLOSURE FOAM

A. All conduit, raceways, cables and sleeves penetrations through fire rated and hazardous location walls, shafts, floor, ceilings, etc., shall be sealed by closure foam as in Dow Corning #3-6548 silicone RTV, GE RTV 850 silicone foam, or Approved Equal.

2.8 SEALING AND FIREPROOFING

A. Penetrations. All conduits, raceways, cables and sleeve penetrations through fire rated and hazardous location walls, shafts, floor, ceilings, etc., shall be sealed with a UL-approved fire stopping system.

B. Furnish UL listed products or products tested by a nationally recognized independent testing laboratory. Select products with rating not less than the rating of the wall, ceiling or floor being penetrated.

C. Manufacturers:
1. 3M CP 25WB + Caulk
2. 3M FS 195 wrap or strip with restricting collar
3. 3M CS 195 composite sheets
4. Proset Systems fire rated floor and wall penetrations
5. Dow Corning Fire Stop System
6. or Approved Equal

D. Use stamped steel, chrome plated, hinged, split ring escutcheons or floor/ceiling plates for covering openings in occupied areas where conduit is exposed.

E. In exterior wall openings below grade, use a modular mechanical type seal consisting of interlocking synthetic rubber links shaped to continuously fill the annular space between the conduit and the cored opening or a water-stop type wall sleeve.

F. At non-rated interior wall or floor openings use Tremco Fyre-Sil, Sika Corp. Sikaflex la, Sonneborn Sonolastic NPT, or Mameco Vulkem 116 urethane caulk or Approved Equal.

PART 3 EXECUTION

3.1 EXAMINATION

A. Verify outlet locations and routing and termination locations of raceway prior to rough in.

3.2 EXISTING WORK

A. Extend existing raceway and box installations using materials and methods compatible with existing electrical installations, or as specified.

B. Clean and repair existing raceway and boxes to remain or to be reinstalled.

3.3 INSTALLATION OF RACEWAYS

A. Routing
1. Install raceway and boxes in accordance with NECA “Standard of Installation.”
2. Conduit routing is diagrammatic only. Contractor shall field route conduit and raceways between equipment and devices as required to obtain a complete wiring system.
3. All exposed conduits shall be installed parallel or perpendicular to dominant surfaces with right-angle turns made of symmetrical bends or fittings.
4. Conduit shall not be installed on the outside face of exposed columns, but shall be routed on the web or on the inside of a flange of the column.
5. Except where prevented by the location of other work, a single conduit or a conduit group shall be centered on structural members.
6. Conduit shall be located at least 6 inches from hot water or steam pipes and from other hot surfaces

B. Moisture Pockets
1. Moisture pockets shall be eliminated from conduits. If water cannot drain to the natural opening in the conduit system, a hole shall be drilled in the bottom of a pull box or a "C-type" conduit fitting provided in the low point of the conduit run.

C. Couplings and Unions
1. Metal conduit shall be joined by threaded conduit couplings, with the conduit ends butted.
2. The use of running threads, Erickson type couplings, split couplings or similar unions are not permitted.

D. Conduit Bodies
1. Conduit bends shall meet the requirements of NEC, minimum bend radius of the cable installed or as indicated, whichever is greater.
2. Conduits or tubing deformed or crushed in any way shall be removed from the Site.

E. Bends and Offsets
1. Changes in direction of conduits shall be made with fittings or bends.
2. Conduit bends shall meet the requirements of NEC, minimum bend radius of the cable installed or as indicated, whichever is greater.
3. Bends shall be made using appropriate tools or mechanical equipment. The use of a pipe tee or vise for bending conduit or tubing will not be permitted.
4. For non-metallic conduit or plastic coated steel, approved factory bends and offsets shall be used.
5. Conduits or tubing deformed or crushed in any way shall be removed from the Site.
6. Install no more than the equivalent of three 90 degree bends between boxes or outlets

F. Cutting and Threading
   1. The plane of all conduit ends shall be square with the centerline.
   2. Where threads are required, they shall be cut and cleaned prior to conduit reaming.
   3. The ends of all conduit and tubing shall be reamed to remove all rough edges and burrs.
   4. Cutting oil shall be used in threading operations; the dies shall be kept sharp, and provisions shall be made for chip clearance.
   5. Threads on conduits and fittings shall be lubricated with conducting and sealing compound.
   6. All steel conduits shall be coated after threading with cold-galvanized zinc coating. The Contractor shall furnish this protective material and shall apply it in the field prior to installing conduit or fittings.

G. All steel conduit, exposed to weather or in contact with earth, shall be re-galvanized after threading with "Galvanizing Powder M-321" as manufactured by the American Solder and Flux Company of Philadelphia, Pennsylvania; "Zincilate 810" as manufactured by Industrial Metal Protectives, Inc., of Dayton, Ohio; "Zinc Rich" coating as manufactured by ZRC Chemical Products Company, Quincy, Massachusetts; or Approved Equal. The Contractor shall furnish this protective material and shall apply it in the field.

H. Connections to Boxes and Cabinets
   1. Conduit shall be securely fastened to all boxes and cabinets.
   2. Threads on metallic conduit shall project through the wall of the box to allow the bushing to butt against the end of the conduit.
   3. The locknuts, both inside and outside, shall then be tightened sufficiently to bond the conduit securely to the box.
   4. Locknuts on connectors shall be tightened securely to bond the connectors.

I. All conduits entering enclosures outdoors or in wet areas shall enter through Meyer's hubs, or Approved Equal, or threaded openings.

J. Cleaning
   1. Precautions shall be taken to prevent the accumulation of water, dirt, or concrete in the conduit.
   2. Conduit in which water or other foreign materials have been permitted to accumulate shall be thoroughly cleaned or, where such accumulation cannot be removed by methods acceptable to the Owner, the conduit shall be replaced.
   3. For conduits sizes 3 inches and larger, draw a flexible testing mandrel approximately 12 inches long with a diameter less than the inside diameter of the conduit through the conduit. After which, draw a stiff bristle brush through until conduit is clear of particles of foreign materials. For conduits less than 3 inches, draw a stiff bristle brush through until conduit is clear of particles and foreign material.

K. Empty Conduit
   1. All conduits installed for future use shall have a polypropylene pull line with a minimum tensile strength of 200 lbs., Jet Line, Cat. No. 232, polyolefin, or Approved Equal. Pull line shall be secures at both ends to ensure future accessibility.

L. Rooftop Conduits

1. Provide redwood sleepers on waterproof mastic base for all conduit runs exposed on roofs.

M. Identification
1. All conduits shall be identified in accordance with other section of these specifications.

N. Grounding
1. All conduits shall be grounded in accordance with these Specifications.
2. A solid or stranded bare copper or green insulated copper solid or stranded ground wire shall be provided in all conduits and raceways.

O. Galvanized Rigid Steel Conduit
1. Galvanized rigid steel conduit shall be installed in areas exposed to weather, vehicle traffic, in hazardous classified areas, for penetrations through foundations, and 10 feet before transition from below grade to 8 feet above grade, unless otherwise indicated.
2. Steel conduit in contact with earth shall be protected by "Scotchwrap" 10 mil tape or Approved Equal applied in double thickness using 50 percent lap turns to 6 inches above grade and 6 inches beyond transition.
3. Expansion joints shall be used where required.

P. Intermediate Steel Conduit
1. Intermediate steel conduit may be installed in lieu of galvanized rigid steel conduit in all above ground areas where rigid steel conduit is permitted, except for wires over 600-volts, unless otherwise specified.

Q. Polyvinyl Chloride (PVC) Coated Galvanized Rigid Steel Conduits and Intermediate Steel Conduit
1. PVC -coated, steel conduit and fittings shall be installed where highly corrosive conditions exist, indoors or outdoors.
2. The Contractor shall patch any damaged coating according to the manufacturer's instructions.

R. Electrical Metallic Tubing
1. Electrical metallic tubing shall be installed for all circuits, indoors above concrete slab, where not subject to conditions outlined for rigid galvanized steel conduits.

S. Rigid Aluminum Conduit
1. Not acceptable.

T. Flexible Metal Conduit, Steel
1. Flexible conduit inserts not greater than 30 inches in length, shall be installed in all conduit runs, which are supported by both building steel and by structures subject to vibration or thermal expansion. This shall include locations where conduit supported by building steel enters or becomes supported by isolated structures on separate foundations.
2. Flexible conduit shall be installed in conduit runs, which cross expansion joints.
3. Special areas, such as plant office control rooms in which external noise is to be minimized, shall have flexible conduit in conduit runs where the runs cross from the main building framing to the control room or office framing.

4. Flexible conduit shall be installed adjacent to all equipment and devices, which move in relation to the supply conduit due to vibration, normal operation of the mechanism, or thermal expansion.
5. Conduit shall be connected to pressure switches, thermocouples, solenoids, and similar devices with flexible conduit. Flexible conduit shall be installed adjacent to the motor terminal housing for motors requiring 4-inch and smaller conduit.
6. Flexible metal conduit inserts not greater than 6 feet in length shall be installed for light fixture tap conductors.

U. Liquid-Tight Flexible Metal Conduit
1. Liquid-tight flexible metal conduit shall be used in place of regular flexible conduit for connections to motors and transformers, in areas exposed to weather, moisture or oil, and under raised floors.
2. Liquid-tight flexible metal conduit may be used in place of flexible metal conduit where not otherwise required.

V. Non-Metallic Conduit
1. Schedule 80 shall be used for all power, signal feeders and branch circuits, in earth under roadways. Conduits must be buried in earth in accordance with the NEC.
2. Schedule 40 shall be used for all other power, signal feeders and branch circuits, in earth or enclosed in concrete, unless otherwise indicated. Conduits must be buried in earth in accordance with the NEC.

W. Conduit Support
1. Fasten conduit supports to building structures and surfaces in accordance with these specifications.
2. Support raceway using coated steel or malleable iron straps, lay-in adjustable hangers, clevis hangers, and split hangers.
3. Do not use wire, ceiling support wires or perforated pipe straps to support conduit. Remove any temporary installation support wire.

X. Spacing of Supports
1. All conduit runs shall be rigidly supported, except where buried in concrete.
2. Each conduit shall be supported within one (1) foot of junction boxes and fittings.
3. Spacers used in duct bank installations shall be placed no more than 6 to 10 feet apart.
4. Support spacing along conduit runs shall be as follows.

Conduit Size	Maximum Distance Between Supports
½ inch through 1-1/4 inch	5 feet
1-1/2 inch and larger	8 feet

Y. Ground and bond raceway and boxes in accordance with these Specifications.

3.4 CABINET AND BOX INSTALLATION

A. Install electrical boxes as indicated, and as required for splices, taps, wire pulling, equipment connections and compliance with regulatory requirements.

B. Locate boxes and conduit bodies so as to ensure ready accessibility of electrical wiring, maintain headroom and to present neat mechanical appearance.

C. Install pull boxes and junction boxes above accessible ceilings and in unfinished areas only. In inaccessible ceiling areas, install outlet and junction boxes no more than 6 inches from ceiling access panel or from removable recessed luminaire.

D. Align adjacent wall mounted outlet boxes for switches, thermostats, and similar devices with each other.

E. Use flush mounting outlet boxes in finished areas.
   1. Do not install flush mounting boxes back-to-back in walls.
   2. Provide minimum 6-inch separation between adjacent boxes.
   3. Provide minimum 24-inch separation in acoustic rated walls.
   4. Use stamped steel bridges to fasten flush mounting outlet box between studs.
   5. Secure flush mounting box to interior wall and partition studs.
   6. Accurately position to allow for surface finish thickness.
   7. Install flush mounting box without damaging wall insulation or reducing its effectiveness.
   8. Use adjustable steel channel fasteners for hung ceiling outlet box.

F. Support boxes independently of conduits.

G. Use code sized gang box where more than one device is mounted together. Do not use sectional box. Use code sized gang box with plaster ring for single device outlets.

H. Use cast outlet box in exterior locations where exposed to the weather and wet locations (interior or exterior).

I. Coordinate installation of electrical boxes and fittings with cable and raceway installation work. Provide knockout closures to cap unused knockout holes where blanks have been removed.

J. Avoid using round boxes where conduit must enter box through side of box, which would result in difficult and insecure connections where fastened with a locknut or bushing on rounded surface.

K. Fasten boxes rigidly to substrate or structural surfaces to which they are being mounted, or solidly embed electrical boxes in concrete or masonry as appropriate.

L. Except as prevented by the location of other work, all junction boxes and outlet boxes shall be centered on structures.

M. Conduit openings in boxes shall be made with a hole saw or shall be punched.

N. Cabinets and boxes shall be rigidly mounted.
   1. Mounting on concrete shall be secured by self-drilling anchors.
   2. Mounting on steel shall be by drilled and tapped screw holes, or by special support channels welded to the steel, or by both.

3. Cabinets shall be leveled and fastened to the mounting surface with not less than ¼-inch air space between the enclosure and mounting surface.
4. All mounting holes in the enclosure shall be used.

O. Large Pull Boxes - Boxes larger than 100 cubic inches in volume or 12 inches in any dimension.
1. Interior Dry Locations - Use hinged enclosure.
2. Other Locations - Use surface mounted box of appropriate location classification.

3.5 ANCHORS

A. Where supports for raceways, boxes, and cabinets are mounted on concrete surfaces, they shall be fastened with self-drilling tubular expansion shell anchors with externally split expansion shells, single-cone expanders, and annular break-off grooved chucking cones. Anchors shall be Phillips "Red Head" or Approved Equal.

3.6 SEALING AND FIREPROOFING

A. Fire-Rated Surface:
1. Where conduit penetrates fire rated surface, install fire-stopping product in accordance with manufacturer's published instructions.
2. All openings through fire rated wall, floor, ceiling or roof must be sealed.
3. Install galvanized sheet metal sleeves (minimum 12-gage) through opening and extending beyond minimum of one (1) inch on each side of building element.
4. Pack void between sleeve and building element with backing material.
5. Seal ends of sleeve with UL listed fire-resistive silicone compound to meet fire rating of structure penetrated.

B. Non-Rated Surfaces:
1. Opening through a non-fire rated wall, floor, ceiling or roof must be sealed using an approved type of material.
2. Use galvanized sheet metal sleeves in hollow wall penetrations to provide a backing for the sealant. Grout area around sleeve in masonry construction.
3. Install escutcheons or floor/ceiling plates where raceway, penetrates non-fire rated surfaces in occupied spaces.
4. Install rubber links of mechanical seal tightened in place and sized for the pipe, in exterior wall openings below grade, in accordance with the manufacturer's instructions.
5. All pipe penetrations at interior partitions and/or walls, laboratory spaces, telephone, data and communication rooms and similar spaces where the room pressure or odor transmission must be controlled, shall be sealed. Sealant shall be applied to both sides of the penetration in such a manner that the annular space between the pipe sleeve and the pipe is completely filled.

3.7 PULL BOX AND VAULT INSTALLATION

A. Openings or "knockouts" in precast concrete vaults shall be located as indicated and shall be sized sufficiently to permit passage of the largest dimension of pipe and/or flange.

B. After the structure and all appurtenances are in place and approved, backfill shall be placed to the original ground line or to the limits indicated.

C. All joints between precast concrete vault sections shall be made watertight. The plastic joint sealing compound shall be installed according to the manufacturer's recommendations to provide a watertight joint which remains impermeable throughout the design life of the structure. The outside of the entire structure shall be coated with an approved water proofing material.

D. Access doors shall be built up such that the hatch is flush with the surrounding surface unless otherwise indicated or directed by the Owner. The Contractor is responsible for placing the cover at the proper elevation where paving is to be installed and shall make all necessary adjustments so that the cover meets these requirements.

E. Ladders shall be installed using Type 316 stainless steel capsule anchors.

F. Ladders shall be attached a minimum of 3 places to the vault wall.

G. Ladder shall be centered under access door opening.

3.8 ADJUSTING

A. Install knockout closures in unused openings in boxes.

3.9 CLEANING

A. Clean interior of boxes to remove dust, debris, and other material.

B. Clean exposed surfaces and restore manufacturer’s finish.

END OF SECTION

SECTION 16140

WIRING DEVICES

PART 1 GENERAL

1.1 SECTION INCLUDES

A. Wiring devices are defined as single discrete units of electrical distribution systems that are intended to carry but not utilize electric energy. The types of general purpose wiring devices required for the project include, but are not limited to the following line voltage devices:
   1. Connectors
   2. Plugs
   3. Receptacles
   4. Switches
   5. Wall plates

1.2 RELATED SECTIONS

A. Section 16050: Common Work Results for Electrical

B. Section 16075: Identification for Electrical Systems

1.3 REFERENCES

A. IEC 529 Degrees of Protection provided by Enclosures.

B. NEMA WD 1 General Purpose Wiring Devices

C. NEMA WD 6 Wiring Device Configurations.

1.4 CONTRACTOR SUBMITTALS

A. Product Data:
   1. Catalog cut of each device showing Manufacturer name, catalog number, voltage and current rating and dimensions.

1.5 REGULATORY REQUIREMENTS

A. Furnish products listed and classified by UL, ETL, or other recognized, acceptable testing and listing agencies as suitable for the purpose specified and shown.

PART 2 PRODUCTS

2.1 GENERAL

A. Provide factory fabricated wiring devices in the type, color, electrical rating for service indicated, and/or as shown on the drawings.

2.2 MANUFACTURERS

A. Provide products produced by one of the following for each type of wiring device:
   1. Appleton
   2. Arrow-Hart, Inc.
   3. Bryant Electric Co.
   4. Crouse-Hinds Co.
   5. General Electric Co.
   6. Hubbell Wiring Device Division
   7. Pass & Seymour
   8. Pyle National
   9. Russell & Stoll
   10. Slater
   11. Wiremold (multi-outlet assemblies)
   12. Or Approved Equal

2.3 WALL SWITCHES

A. Provide specification grade, quiet type, flush, 1-pole, 2-pole, three and four-way toggle switches, 20 ampere, 120/277-volts AC, with mounting yoke insulated from mechanism equipped with plaster ears and side wired screw terminals, ivory plastic body with toggle handle, NEMA WD-1.
   1. Device Number: #1221, #1222, #1223, #1224
   2. Manufacturers: Hubbell, Pass & Seymour, Bryant, Or Approved Equal

2.4 RECEPTACLES

A. Provide specification grade, grounding type, heavy-duty receptacles with ivory plastic body, green hexagonal equipment ground screw terminal and grounding poles internally connected to mounting yoke; metal plaster ears; side wiring NEMA WD-6 as follows:
   1. Duplex Receptacle: Two pole, 3 wire, 20-ampere, 125-volt duplex receptacle, NEMA configuration 5-20R unless otherwise indicated.
   2. GFCI Receptacle: Two pole, 3 wire, 20-ampere, 125-volt duplex receptacle with integral ground fault circuit interrupter to meet regulatory requirements.
   3. Special Purpose: Two pole, 3 wire, 20-ampere, 125-volt single receptacle, twist-lock, NEMA configuration L5-20R as indicated.
   4. Two pole, 3 wire, 20-ampere, 250-volt single receptacle, twist-lock, NEMA configuration L6-20R as indicated.
   5. Two pole, 3 wire, 20-ampere, 277-volt single receptacle, twist-lock, NEMA configuration L7-20R as indicated.
   6. Two pole, 3 wire, 30-ampere, 125-volt single receptacle, twist-lock, NEMA configuration L5-30R as indicated.
   7. Two pole, 3 wire, 30-ampere, 250-volt single receptacle, twist-lock, NEMA configuration L6-30R as indicated.
   8. Two pole, 3 wire, 30-ampere, 277-volt single receptacle, twist-lock, NEMA configuration L7-30R as indicated.
   9. Three phase, 4 wire, 20-ampere, 125/250-volt single receptacle, twist-lock, NEMA configuration L14-20R as indicated.

10. Three phase, 4 wire, 20-ampere, 250-volt single receptacle, twist-lock, NEMA configuration L15-20R as indicated.
11. Three phase, 4 wire, 20-ampere, 480-volt single receptacle, twist-lock, NEMA configuration L16-20R as indicated.
12. Three pole, 4 wire, 30-ampere, 125/250-volt single receptacle, twist-lock, NEMA configuration L14-30R as indicated.
13. Three pole, 4 wire, 30-ampere, 250-volt single receptacle, twist-lock, NEMA configuration L15-30R as indicated.
14. Special Purpose Receptacle: Type as required meeting the requirements of this Section and the equipment shown on the drawings and elsewhere specified.

2.5 PLUGS AND CONNECTORS

A. Comply with NEMA Standards Publication No. WD-1. Provide 20 ampere, 125-volts, bakelite body connectors, 3-wire grounding, parallel blades, double wipe contact, with cord clamp.

B. Matching Insulgrip, corrosion resistant nylon plugs, IP20, shall be provided for each twist-lock type receptacles unless indicated otherwise.

C. Manufacturers: Hubbell, Pass & Seymour, Bryant, or Approved Equal.

2.6 WALL PLATES

A. Decorative Cover Plate: High impact, smooth nylon and smooth satin in finished areas. Color of nylon cover plate shall be ivory unless noted otherwise. Stainless steel cover plate in unfinished areas or where device is embedded in concrete.

B. For areas where two separate power sources are provided, each power source receptacle shall have a different color cover plate such as black, gray, or brown. Emergency power source receptacles shall have a red cover plate.

C. Weatherproof Cover Plate: Gasketed cast metal with hinged gasketed device cover. Cover for duplex devices shall be designed such that each device is independently covered.

2.7 MULTI-OUTLET ASSEMBLIES

A. Provide fixed multi-outlet assemblies consisting of #5362 grounding type, 20 ampere, 125-volt, two poles, three wire receptacles as an integral part, on 12-inch centers, unless otherwise noted.

B. Where more than one circuit is indicated, do not connect adjacent receptacles to the same circuit. Include raceway snap-on covers with punched holes to accurately align receptacles.

2.8 HAZARDOUS RATED AREAS

A. Switches, receptacles and other devices installed in hazardous areas shall be explosion-proof type in accordance with NFPA 70 and as shown on drawings.

PART 3 EXECUTION

3.1 EXAMINATION

A. Verify outlet boxes are installed at proper height.

B. Verify wall openings are neatly cut and will be completely covered by wall plates.

C. Verify branch circuit wiring installation is completed, tested, and ready for connection to wiring devices.

D. Inspect each item of materials or equipment immediately prior to installation, and reject damaged and defective items.

3.2 PREPARATION

A. Provide extension rings to bring outlet boxes flush with finished surface, if necessary.

B. Clean debris from all boxes.

3.3 INSTALLATION

A. Install wiring devices where indicated, in accordance with the manufacturer's written instructions, the applicable requirements of the NEC and the NECA "Standard of Installation", and in accordance with recognized industry practices to ensure that products serve the intended function.

B. Comply with the manufacturer's applicable instructions and recommendations for installation, to whatever extent these are more explicit or more stringent than applicable requirements indicated in the contract documents.
   1. Install devices plumb and level. Install switches with OFF position down
   2. Install vertically oriented grounded receptacles with grounding pole on top
   3. Connect wiring device grounding terminal to equipment grounding conductor as specified in Section 16050.
   4. Connect isolated ground (IG) receptacle equipment (yoke) grounding terminal only at metallic box with bonding jumper
   5. Install decorative plates on switch, receptacle, and blank outlets in finished areas
   6. Install galvanized steel plates on outlet boxes and junction boxes in unfinished areas, above accessible ceilings, and on surface mounted outlets in utility areas. (Does not include multi-outlet assemblies, other similar locations.).
   7. Identify wiring devices as specified in Section 16075..

3.4 INTERFACE WITH OTHER PRODUCTS

A. Coordinate locations of outlet boxes to obtain mounting heights compliant with ADA.

B. Install wall switches at 42 inches to top of the maximum reach above finished floor for forward reach applications, 48 inches to top of reach for side reach applications to comply

with the ADA. The lower reach shall be at or above 18 inches for forward reach and for side reach to comply with the ADA, unless otherwise noted.

C. Install convenience receptacle 18 inches to center above finished floor, unless otherwise noted.

D. Install convenience receptacle 6 inches to center above backsplash of counter, unless otherwise noted.

E. Install dimmer 42 inches to center above finished floor, unless otherwise noted.

F. Install telephone and/or data jacks 18 inches to center above finished floor, unless otherwise noted.

G. Install telephone jack for wall telephone 42 inches to top of reach above finished floor for forward reach applications, and 48 inches to top of reach above finished floor for side reach applications to comply with the ADA. Receiver hook shall not be above 54 inches to its highest point above finished floor.

3.5 FIELD QUALITY CONTROL

A. Inspect each wiring device for defects.

B. Operate each wall switch with circuit energized and verify proper operation.

C. Verify that each receptacle device is energized.

D. Test each receptacle device for proper polarity.

E. Test each GFCI receptacle device for proper operation.

F. Verify that each telephone and data jack is properly connected and circuit is operational.

3.6 ADJUSTING

A. Adjust devices and wall plates to be flush, plumb and level.

END OF SECTION

SECTION 16149

LIGHTING CONTROL DEVICES

PART 1 GENERAL

1.1 SUMMARY

A. Section Includes:
1. Remote control lighting relays.
2. Lighting contactors.
3. Switches.
4. Switch plates.
5. Occupancy sensors.
6. Photo control module.

1.2 RELATED SECTIONS
1. Section 16050: Common Work Results for Electrical
2. Section 16500: Lighting

1.3 REFERENCES

A. NEMA AB 1 - Molded Case Circuit Breakers and Molded Case Switches.

B. NEMA FU 1 - Low Voltage Cartridge Fuses.

C. NEMA ICS 2 - Industrial Control and Systems: Controllers, Contractors, and Overload Relays, Rated Not More Than 2000 Volts AC or 750 Volts DC.

D. NEMA ICS 4 - Industrial Control and Systems: Terminal Blocks.

E. NEMA ICS 5 - Industrial Control and Systems: Control Circuit and Pilot Devices.

F. NEMA ICS 6 - Industrial Control and Systems: Enclosures.

G. NEMA KS 1 - Enclosed and Miscellaneous Distribution Equipment Switches (600 Volts Maximum).

H. ASHRAE 90.1 2007 – Energy Standard for Buildings Except Low-Rise Residential Buildings

I. IECC 2003

1.4 SYSTEM DESCRIPTION

A. Centralized control and switching control using digitally programmable panel mounted lighting relay controls for common area and exterior lighting control.

B. Occupancy sensors for lighting and area exhaust fan control applications.

C. Controls for local dimming and day-lighting control using a programmable digital ballast network interface for classroom lighting applications.

1.5 SUBMITTALS

A. Provide submittals for the following:
   1. Lighting control panels including:

      a. Cabinets, enclosures, covers, & trim.
      b. Contactors & relays.
      c. Transformers, and power supplies.
      d. Automation, intelligence, communication, and building EMS interface cards.
      e. Photo-control package.
      f. Dataline and low-voltage switches.
      g. Network interface modules.
      h. Control & programming software.
      i. Low-voltage, dataline, and network cabling.
   2. Occupancy sensors and power packs
   3. Classroom digital dimming/day-lighting control system

B. Provide three copies of manufacturer's system documentation including:
   1. Reflected ceiling plans showing each occupancy and daylighting sensor location.
   2. System one-line showing all panels, number and type of switches and sensors, dataline, telephone override modules, and central PC.
   3. Drawings for each panel showing hardware configuration and numbering.
   4. Panel wiring schedules, relay grouping, and channel assignments.
   5. Typical wiring diagrams and mounting details for each component.

C. Certify that the products meet the product specifications and local energy codes. If any additional equipment is required to meet the coverage patterns or local energy codes, the provide the additional equipment at no cost to the Owner.

1.6 QUALITY ASSURANCE

A. Comply with NEC, NEMA, and FCC Emission requirements for Class A applications.

B. UL Approvals: Relay panels and accessory devices are to be UL listed under UL 916 Energy Management Equipment. Configured to order or custom relay panels shall be UL Listed under UL 508, Industrial Control Panels.

1.7 DELIVERY, STORAGE, AND HANDLING

A. Accept components on Site in manufacturer's packaging. Inspect for damage.

B. Protect components by storing in manufacturer's containers indoor protected from weather.

1.8 EXTENDED WARRANTY

A. Provide a four year extended warranty for all system components.

PART 2 PRODUCTS

2.1 MANUFACTURERS

A. Occupancy Sensors - Watt Stopper, Inc., or Approved Equal:
   1. Low voltage Dataline Switch: Wattstopper HLDS2SS
   2. Wall sensor switch, 1-circuit, line voltage, passive IR: Watt-Stopper # DW-100.
   3. Wall sensor switch, 2-circuit, line voltage, passive IR: Watt-Stopper # DW-200.
   4. Ceiling sensor, line voltage, 360° coverage, dual-technology: Watt-Stopper #DT-355.
   5. Ceiling sensor, low voltage, 360° coverage, dual-technology, for use with power-pack: Watt Stopper #DT-300.
   6. Wall sensor, low voltage, 2000 SF coverage, dual-technology, for use with power-pack: Watt Stopper #DT-200 with mud ring adapter.
   7. Power pack, 1-circuit, Dual Voltage 120/277 VAC: Watt-Stopper #BZ-100.
   8. Power pack, 2-circuit: Watt-Stopper #LC-100 v2.

B. Lighting Relay Control Panel (For Common and Exterior Lighting Control):
   1. Watt Stopper Lighting Integrator or Approved Equal

C. Lutron EcoSystem (For areas with Day-Lighting Control) or Approved Equal:
   1. Ceiling Occupancy Sensors: LOS-CDT-2000-WH or Watt Stopper equivalent.
   2. Wall Occupancy Sensors: LOS-WDT-WH or Watt Stopper equivalent.
   3. Low Voltage Network Wall Switches: CC-1BRL
   4. Fixture Mounted Daylight Sensor: C-SR-M1, or Wattstopper LS-100
   5. Lighting Control System: Lutron CS-1L-WM, Bus Supply/Programmable Network Controller mounted within a flush mount 8″ x 8″ x 4″ enclosure and all devices and programming necessary for a fully functional system and as indicated elsewhere, including:

      a. Handheld Network Programmer: C-PDA-CLR, or Equal

2.2 MATERIALS

A. Wall Sensors: Provide products as follows:
   1. Capable of detection of occupancy at desktop level up to 300 sq. ft. and gross motion up to 1000 sq. ft.
   2. Accommodate loads from 0 to 800 watts at 120 volts and 0 to 1200 watts at 277 volts and have 180 degree coverage capability.
   3. Utilize Zero Crossing Circuitry which increases relay life of sensor and increases sensor's longevity.
   4. No leakage current to load, in manual or in Auto/Off mode, for safety purposes.
   5. Have voltage drop protection.

B. Passive Infrared Sensors: Provide products as follows:
   1. Utilize custom ASIC specifically designed for PIR sensors which provides high immunity to false triggering from RFI (walkie talkies) and EMI (electrical noise on the line), superior performance, and greater reliability.
   2. Have a multiple segmented Fresnel lens, in a multiple-tier configuration, with grooves-in to eliminate dust and residue buildup.

3. Where specified, passive infrared and dual technology sensors shall offer daylighting foot-candle adjustment control and be able to accommodate dual level lighting.

C. Dual Technology Sensors: Provide products as follows:
1. Corner-mounted to avoid detection outside the controlled area when doors are left open.
2. Consisting of passive infrared and ultrasonic technologies for occupancy detection.

D. Sensors: Provide products as follows:
1. Capable of operating normally with electronic ballasts, PL lamp systems, and rated motor loads.
2. Coverage: Remain constant after sensitivity control has been set. No automatic reduction shall occur in coverage due to the cycling of air conditioner or heating fans.
3. Readily accessible, user adjustable controls for time delay and sensitivity. Controls shall be recessed to limit tampering.
4. Provide a bypass manual override on each sensor in the event of failure. When bypass is utilized, lighting shall remain on constantly until sensor is replaced. Control shall be recessed to prevent tampering.
5. Ultrasonic Operating Frequency: Crystal controlled to within plus or minus 0.005 percent tolerance to assure reliable performance and eliminate sensor cross-talk.

   a. Sensors using multiple frequencies are not acceptable.
6. Provide a method of indication to verify that motion is being detected during testing and that the unit is working.
7. Where specified, sensor shall have an internal additional isolated relay with Normally Open, Normally Closed, and Common outputs for use with HVAC control, Data Logging, and other control options.

   a. Sensors utilizing separate components or specially modified units to achieve this function are not acceptable.

2.3 CIRCUIT CONTROL HARDWARE

A. Control Units:
1. Externally mount control unit through a 1/2-inch knockout on a standard electrical enclosure for ease of mounting, installation, and future service.
2. Provide an integrated, self-contained unit consisting internally of an isolated load switching control relay and a transformer to provide low-voltage power.
3. Provide power to a minimum of 2 sensors from each control unit.

B. Relay Contacts: Provide ratings as follows:
1. 13A - 120 VAC Tungsten.
2. 20A - 120 VAC Ballast.
3. 20A - 277 VAC Ballast.

2.4 CONTROL WIRING

A. Control Wiring Between Sensors and Control Units: Class II, 18-24 AWG, stranded UL Classified, PVC insulated or TEFLON jacketed cable suitable for use in plenums, where applicable.

2.5 ENCLOSURES

A. Sensors: UL rated, 94V-0 plastic enclosures.

2.6 LIGHTING RELAY CONTROL PANEL (FOR COMMON AND EXTERIOR LIGHTING CONTROL):

A. Lighting Relay System: Watt Stopper Lighting Integrator, Control panel with quantity of relays as indicated on the drawings,(4) four pole contactors and all devices and programming necessary for a fully functional system and as indicated elsewhere, including:
   1. Photo Control Module
   2. Automation Card for interface of connected devices
   3. Network Clock Programmer for programming
   4. Universal Switch Interface module (1 per lighting control panel)
   5. Building Management System BMS interface module

B. Provide an automated lighting control system, consisting of relay panel assemblies; programmable intelligence cards; power supplies; networked time-switch; low voltage switches; photocell; and all associated data and low voltage control cabling as depicted on the Drawings and as specified herein.

C. Lighting Control Panels shall be UL listed and consist of the following:
   1. Enclosure/Tub: NEMA 1, NEMA 3R, or NEMA 4 as indicated on the drawings, sized to accept an interior with 1-8 relays, 1-24 relays and six (6) four pole contactors, or 1-48 relays with six (6) four pole contactors.
   2. Cover: Surface or Flush as required, hinged, and lockable and with restricted access to line voltage section.
   3. Interior: Barrier included for separation of high voltage (class 1) and low voltage (class 2) wiring. The interior shall include intelligence boards, power supply, mechanically latched control relays and multi-pole contactors. The interiors will include the following features:

      a. Screwless, removable, plug-in connections for all low voltage terminations.
      b. Each relay shall be capable of individual ON/OFF control by a low voltage switch and/or occupancy sensor input.
      c. The system shall monitor true relay status; the relay status will be displayed at the onboard pilot LED and monitored by the system electronics.
      d. Stagger the ON and OFF sequence of the relays.
      e. Heavy Duty Relays – Mechanically latching contacts with single moving part design for improved reliability. Relays to have the following characteristics:
      f. 30 amp NEMA 410 electronic ballast rated and 20 amp tungsten, rated for 50,000 ON/OFF cycles at full load, Support #12 - #14 AWG solid or stranded wire and rated for 120, and 277 volts; 20 amp NEMA 410 electronic ballast rated and 20 amp tungsten 347 volts.
      g. 30 VAC isolated contacts for status feedback and pilot light indication.
      h. 14,000 amp short circuit current rating.
      i. Contactors shall be DIN rail mounted, four pole standard, normally open or normally closed, electrically held with 120 or 277 volt coil voltage to match panel control power voltage. Contactors shall be compatible with all lighting, ballast

and HID loads and be rated for 277 volt 20 amp tungsten and 600 volt 30 amp ballast loads.

4. Power Supply: Multi-voltage transformer assembly with enough power to supply all electronics, occupancy sensors, dataline switches, pilot lights, and photocells as necessary to meet the project requirements. Power supply to have internal over-current protection with automatic reset and metal oxide varistor protection.
5. Only one of either the Networked Timeclock or Building Management Interface module will actually be installed and configured in the panel. Provide both items and convey the uninstalled module back to the Owner in the original packaging.

D. RELAY PANEL - Group, Channel and Pattern Control

1. Provide a Group Switching card (GS) that allows simple group and pattern configuration at the panel without requiring handheld devices or special programming tools. The GS shall allow any group of relays within the panel to be associated (smartwired) to a channel button using the following procedure:

    a. Press and hold the group pushbutton for several seconds. The group LED and the LEDs for relays currently controlled by that input will begin to flash.
    b. Select the relays to be controlled. The LED for each relay smartwired to the channel selected will be flashing ON/OFF. Press the associated relay control button to add/delete that relay to/from the group.
    c. Press the group pushbutton again. The LEDs will stop flashing and the group pushbutton and associated switch inputs will now control the relays selected.
2. Group Status: Each group pushbutton shall include an LED status indication. The LED will be ON whenever all of the relays within the group are ON; and shall go OFF when all of the relays within the group go OFF. The LED will be green when in a “mixed” state. Each channel shall also have an associated dry contact closure and pilot contact which tracks the LED operation described above.
3. Hardware Features

    a. Each GS card will support up to eight groups (channels). The 8-relay and 24-relay panels shall support one GS card; the 48 relay panels will support two cards.
    b. Individual relays may be assigned to more than one channel, and the channel status will be annunciated appropriately.
    c. Each channel shall also have an input for connecting switch or dry contacts for controlling a channel. Inputs shall accept 2 or 3-wire, maintained or momentary inputs, or a 24 VDC signal from occupancy sensor or other voltage signaling device. Groups may be controlled by: an on-board group pushbutton switch, low voltage switch, dataline switch, occupancy sensor, photocell, or time of day.
    d. Screwless, removable, plug-in terminals will be provided for all low voltage wiring connections.

E. RELAY PANEL - AUTOMATION PANEL NETWORKING AND DATALINE SWITCH SUPPORT

1. An automation control card provides a non-proprietary network for communications between the intelligent field devices, panels, BMS Module, and Photocontrol Module.

    a. The modules in multiple panels shall be linked over a single dataline that uses a digital network protocol for communications.

b. The dataline shall extend from the lighting control panel and provide a single communications bus to allow dataline switches and other intelligent field devices to communicate with the panels.
c. Dataline communications wire shall be 18 AWG, 4 unshielded copper conductors (two independent twisted pairs) meeting Class 2P NEC code requirements. The dataline can be run in a loop, serial, or star configuration.

F. BUILDING MANAGEMENT SYSTEM INTERFACE
1. The BMS module shall provide an occupied/unoccupied signal to all networked relay panels by using dry contact closures from any automation system. The module will also provide the blink warning signal, time delay feature and all necessary requirements for ASHRAE 90.1, IECC 2003 as well as state and local energy codes required for this project.
2. The BMS module accepts timing signals from another system, and does not provide its own scheduling; it shall include a unique egress delay option for each group to allow time for occupants to clear the area before lighting is turned OFF.
3. Features

a. 2 line LCD display with simple data entry for each of eight channels.
b. User-selectable intelligent scenarios to handle standard lighting control functions for each channel independently, including:
1) Schedule ON / Schedule OFF
2) Manual ON / Schedule OFF

c. Automatically detects the presence of the eight channel Photocontrol Module on the dataline and adds the Dark scenarios to the menus, accepting actual light level readings for the following scenarios:
1) Dark ON / Dark OFF
2) Dark ON / Schedule OFF

d. User-selectable egress delay up to 240 minutes (4 hours) to allow safe exit after channel status changes to Unoccupied.
e. Isolated, single-pole input contact for each channel, user-definable with choice of Occupied = Open or Occupied = Closed.
f. 24 VAC, 1 amp status output contacts, user-definable with choice of closed contact = Any ON, All ON, All OFF, Any OFF.

2.7 DIGITAL NETWORK CLOCK

A. The lighting control system shall include a digital clock module capable of system wide automation of the lighting control on a scheduled basis. The clock shall provide capability for independent schedules for each of the eight system wide channel groups.

B. The clock shall support all of the energy saving features required of ASHRAE 90.1, IECC 2003, as well as all state and local energy codes.

C. The clock module shall provide astronomic capabilities, time delays, blink warning, daylight savings, and holiday functions and will include a battery back up for the clock function and EEPROM for program retention. Clocks that require multiple events to meet local code lighting shut off requirements shall not be allowed.

D. The clock shall operate on a basis of unique pre-configured control scenarios. Scenarios shall include:
   1. Scheduled ON / OFF
   2. Manual ON / Scheduled OFF
   3. Manual ON / Auto Sweep OFF (for AS-100 Switches)
   4. Astro ON / OFF (or Photo ON / OFF)
   5. Astro and Schedule ON / OFF (or Photo and Schedule ON / OFF)

E. The clock shall include system diagnostic functions to identify and verify communication with intelligent field devices anywhere on the network dataline,

F. The clock module shall function as a dataline switch programming tool and allow the assignment of relays and channel groups to dataline switch buttons.

G. The user interface shall incorporate an 8-line, 22-character per line LCD display and a simple pushbutton interface with on line help feature

H. The clock module shall employ non volatile memory and shall retains user programming and time for a minimum of 10 years.

I. Provide DIN rail mounting for the clock programmer in the Class 2 section of the lighting control panels

2.8 PHOTO CONTROL MODULE

A. Provide a weatherproof Class 2 photocell for measuring exterior light levels. The photocell shall be mounted facing north as indicated on the plans. The photocell shall be connected to a photocontrol module mounted on the DIN rail inside the low voltage section of a lighting control panel and connected to the dataline communications wire.

B. The photocontrol Module shall integrate seamlessly with either the Network Clock, Automation Appliance, or the BMS Interface Module. The control module shall measure the actual exterior light and display this level in foot candles (fc) on the unit LCD display.

C. The controller shall have eight individual set point adjustments that are available to the lighting control network over the dataline communications wire.

D. Features
   1. Real time, 2 line LCD display of actual exterior light level up to 200 fc.
   2. Channel set points and parameters programmed via the Network Clock or BMS Interface Module.
   3. Choice of OPERATE or TEST modes, with simulated light level for testing.
   4. Automatic dead band and 5 minute time delay to avoid cycling

2.9 DATALINE

A. The Dataline wire will be supplied by the equipment manufacturer and will include the manufacturers name, catalog number and length of wire printed on the wire jacket. The contractor, at their own expense will, replace an improper dataline wire.

2.10 EMERGENCY LIGHTING RELAY

A. The Emergency Lighting Relay shall be a Wattstopper ELCU-100 or Approved Equal. The relay shall be connected to sense the on/off status and control emergency fixtures similar to fixtures in the vicinity. Additional emergency lighting relays shall be provided as necessary to accommodate additional zones of control.

PART 3 EXECUTION

3.1 GENERAL

A. Install all lighting control system and device wiring in conduit. Install the lighting control system conduit, wiring, and accessories in accordance with the requirements of Sections 16050 and 16500.

B. Installation
   1. Softwired Switches and/or photocells shall be mounted in the spaces as indicated on the Reflected Ceiling Plans. Each low voltage wire shall be labeled clearly indicating which relay panel it connects to. Use only properly color coded, stranded #18 AWG (or larger) wire as indicated on the drawings or as recommended by the manufacturer. All relays and switches shall be tested after installation to confirm proper operation and the loads recorded on the directory card in each panel.
   2. The relay panels shall be mounted in electrical closets as indicated on the drawings. The numbered relays in the panel shall be wired to control the power to each load as indicated on the Panel Wiring Schedules included in the drawings. All power wiring will be identified with the circuit breaker number controlling the load. If multiple circuit breaker panels are feeding into a relay panel, wires shall clearly indicate the originating panel's designation.

C. Refer to the Drawings, particularly the architectural elevations and reflected ceiling plans, in determining the exact mounting location and height for switches, sensors, cabinets, and accessories.

3.2 SUPPORTS AND BLOCKING

A. Provide supports and blocking for cabinets that will provide support independent of suspended ceilings, ceiling or wall surfaces.

B. Provide blocking and back-boxes for wall switches and ceiling sensors.

3.3 AUTOMATIC LIGHTING CONTROLS SYSTEM STARTUP

A. Manufacturer shall provide a factory authorized technician to confirm proper installation and operation the system components including testing of all system components and operation and initial programming

B. The startup requirement is intended to verify:
   1. That all sensors are located, installed, and adjusted as intended by the factory and the contract documents.

2. The occupancy sensors and daylighting sensors are operating within the manufacturers specifications.
3. The sensors and relay panels interact as a complete and operational system to meet the design intent.

C. Manufacturer to provide a written statement verifying that the system meets the above requirements.

3.4 TRAINING

A. Provide factory authorized technician to train owner personnel in the operation, programming and maintenance of the lighting control system including all occupancy sensors and daylighting controls.

B. User training shall consist of four hours of on-site training of Owner designated personnel.

3.5 PROGRAMMING

A. Provide system programming by manufacturer including:
1. Wiring documentation.
2. Switch operation.
3. Operating schedules.

B. These shall be provided on CD-ROM compatible with the central PC's Lighting Control Program.

END OF SECTION

SECTION 16271

LIQUID FILLED, PAD MOUNTED TRANSFORMERS

PART 1 GENERAL

1.1 SECTION INCLUDES

A. Three-phase liquid filled pad-mounted transformers with separable high voltage connectors and integral load break loop feed "T" switch (dead front).

1.2 RELATED SECTIONS

A. Section 16126 – Medium Voltage Testing and Preventive Maintenance

1.3 REFERENCES

A. ANSI C57.12.26, Pad-Mounted, Compartmental-Type, Self-Cooled, Three-Phase Distribution Transformers for Use with Separable Insulated High Voltage Connectors (34,500 GrdY/19,920 Volts and Below; 2500 KVA and Smaller).

B. ANSI C57.12.70, Terminal Markings and Connections for Distribution and Power Transformers

C. ANSI/IEEE C57.12.00, General Requirements for Liquid-Immersed Distribution, Power, and Regulating Transformers

D. ANSI/IEEE C57.12.80, Terminology for Power and Distribution Transformers including supplement ANSI/IEEE C57.12.80a

E. ANSI/IEEE C57.12.90, Test Code for Liquid-Immersed Distribution, Power and Regulating Transformers

F. ANSI C62.11, Metal-oxide surge arresters for AC power circuits

G. 10 CFR Part 431, Energy Conservation Program for Commercial Equipment: Distribution Transformers Energy Conservation Standards; Final Rule; October 12, 2007.

1.4 SYSTEM DESCRIPTION

A. Pad-mounted, compartmental-type transformer shall consist of a transformer tank and two cable terminating compartments, one each for high and low voltage. Transformer tank and compartments shall be assembled as an integral unit for mounting on a pad.

B. There shall be no exposed screws, bolts, or other fastening devices that are externally removable. There shall be no openings through which foreign objects such as sticks, rods, or wires might contact live parts. There shall be means for padlocking

compartment door(s). Construction shall limit entry of water (except flood water) into compartment so as not to impair transformer operation.

1.5 SUBMITTALS

A. Manufacturer shall provide copies of following documents to District for review and evaluation:
   1. Product Data on specified product;
   2. Shop Drawings on specified product;
   3. Standard Test Data, as required by ANSI/IEEE C57.12.90, by Transformer Serial Number to follow shipment.
   4. Contractor shall provide structural calculation showing anchor bolt type, size, location and seismic anchoring details, for each size transformer, for conformance with Seismic Zone 4 requirements per the latest California Building Code (CBC). The calculations shall be prepared and wet sealed by a civil engineer licensed in the State of California.

1.6 PROJECT RECORD DOCUMENTS

A. Maintain an up-to-date set of Contract documents. Note any and all revisions and deviations that are made during the course of the project.

1.7 OPERATION AND MAINTENANCE DATA

A. Manufacturer shall provide copies of installation, operation and maintenance procedures to District.

B. Submit operation and maintenance data based on factory and field testing, operation and maintenance of specified product.

1.8 QUALITY ASSURANCE (QUALIFICATIONS)

A. Manufacturer shall have specialized in the manufacture and assembly of 3-phase pad-mounted transformers with separable insulated high voltage connectors for 30 years.

1.9 DELIVERY, STORAGE, AND HANDLING

A. Deliver, store, protect, and handle products in accordance with recommended practices listed in manufacturer's Installation and Maintenance Manuals.

B. Deliver each transformer on individual shipping skids for ease of handling.

C. Inspect and report concealed damage to carrier within specified time.

D. Handle in accordance with manufacturer's written instructions to avoid damaging equipment, installed devices, and finish. Lift only by installed lifting eyes.

1.10 WARRANTY

A. Manufacturer warrants equipment to be free from defects in materials and workmanship for 1 year from date of shipment.

1.11 FIELD MEASUREMENTS

A. Make all necessary field measurements to verify that equipment shall fit in allocated space.

PART 2 PRODUCTS

2.1 MANUFACTURER

A. General Electric Company

B. Cooper Power Systems

C. Approved Equal

2.2 COMPONENTS

A. Standard construction
1. Transformer ratings shall be as follows.

a. Three-phase
b. Size: as indicated on the drawings
c. 60 Hz.
d. 65 degree C Rise
e. Insulating liquid shall be Envirotemp FR3 Fire Resistant Fluid, with accompanying FM labeling
f. Primary winding: 12470V Delta
g. Secondary winding: as indicated on the drawings
h. The tap changer control is for de-energized operation only and must be externally operable with a hotstick and requires at least two operator actions to change taps. The preferable location for the control is in the primary compartment.
i. Primary taps: Two, 2 1/2 percent above and two, 2 1/2 percent below

2. Winding material shall be copper.
3. Basic Impulse Level:

a. 15-kV rated winding - 95-kV BIL

4. Transformers shall have efficiencies compliant with U.S. Department of Energy final rule for the Distribution Transformers Energy Conservation Standard Rulemaking, 10 CFR Part 431 (October 12, 2007).
5. Transformer shall consist of a transformer tank with high- and low-voltage cable terminating compartment. The transformer tank and compartment shall be assembled as an integral unit for mounting on a pad. There shall be no exposed

screws, bolts, or other fastening devices which are externally removable. There shall be no openings through which foreign objects such as sticks, rods, or wires might contact live parts.

6. The construction shall limit the entry of water (other than flood water) into the compartment so as not to impair the operation of the transformer.
7. Full-height, air-filled incoming and outgoing terminal compartments with hinged doors and separated by a steel barrier shall be located side-by-side. Incoming compartment shall be on the left, outgoing compartment on the right.
8. High-voltage compartment shall be accessible only after door to low-voltage compartment has been opened.
9. To facilitate making connections and permit cable pulling, the doors and compartment hood shall be removable. Removable door sill on compartments shall be provided to permit rolling or skidding of unit into place over conduit studs in foundation.
10. Compartment hood shall be removable for pulling cables and making connections. Compartment door sills shall be removable to permit rolling or skidding unit into place over conduit studs in foundation.
11. Compartments hinged doors shall be equipped to latch in open position. High-voltage compartment door shall have a fastening device that is accessible only through low-voltage compartment.
12. Door hinge assemblies shall be made of corrosion-resistant material. 3/8 inch (minimum) diameter stainless-steel hinge pins shall be used.
13. Both compartment doors shall be able to be locked with a single padlock having a maximum 1/2-inch diameter shackle.
14. Provide lifting provisions in accordance with ANSI Standards, as well as jacking and rolling provisions.
15. Instruction nameplate shall be located in low-voltage portion of compartment and shall be readable with cables in place. Where the nameplate is mounted on a removable part, manufacturer's name and transformer serial number shall be permanently affixed to a non-removable part.
16. Transformer tank shall be sealed-tank construction with a welded main cover.
17. A bolted tamper-resistant handhole shall be provided in tank cover for access to internal connections.
18. Provisions for tank grounding shall be supplied in both high- and low-voltage compartments. These provisions shall consist of:

    a. For 500 KVA and below, 1/2-13 UNC tapped hole 7/16-inch deep;
    b. For 750 KVA and above: 2, 1/2-13 UNC tapped holes 1/2-inch deep.
19. H V and LV bushings shall be externally replaceable. The inside terminal connections shall be externally removable through the connectors opening in the transformer tank or through a handhole.
20. Low voltage bushings shall be tinned, spade-type with 9/16-inch holes spaced on 1-3/4-inch centers in accordance with latest revisions of applicable ANSI standards.
21. For wye-wye connected units, high- and low-voltage neutrals shall be connected internally and brought out through a bushing in secondary compartment.
22. Primary (separable insulated high-voltage connector) bushings:

a. Six, 200-ampere bushing wells
b. Six, 200-ampere bushing well inserts for termination of cable using elstomeric separable connectors

23. Overcurrent Protection

a. Three bayonet-type, oil-immersed, expulsion fuses accessed from primary compartment. Fuses shall be removable with a hot stick without disassembly of primary cabinet for external replacement of fuse cartridges.

24. Switches

a. Loop feed switch shall be an internal, oil-immersed, loadbreak, manually operated switch for a looped, primary cable system - 'T' Blade, 4-position sectionalizing switch shall allow the loop to be energized while the transformer is de-energized. Switches shall be rated 300 amperes. Switch handle(s) shall be located in primary compartment and shall be hot-stick operable. Six primary bushings shall be provided.

2.3 ACCESSORIES

A. Standard accessories for all units:
1. 1-inch filling provision;
2. 1-inch drain provision;
3. Liquid level indication;
4. 1-inch drain valve and sampler;
5. One-inch drain valve and sampler;
6. Dial-type thermometer;
7. Liquid-level gauge;
8. Vacuum/pressure gauge (1/4 inch NPT).
9. (1) set of spare fuses
10. In-tank distribution type surge arresters, 15-kV class, for use on a 12.47-kV system and meeting the requirements of ANSI C62.11. GE Tranquell 10kV arrester or equal.

2.4 TESTING

A. No load loss

B. Excitation current at rated voltage

C. Polarity check

D. Ratio check

E. Low frequency dielectric tests at high and low voltage

F. Mechanical leak test

G. Load loss

H. Impedance

I. Production line impulse test

PART 3 EXECUTION

3.1 EXAMINATION

A. Verify that transformers are ready to install.

B. Verify field measurements are as shown on Drawings.

C. Verify that required utilities are available, in proper location and ready for use.

3.2 EXISTING WORK

A. Disconnect and remove abandoned pad-mounted transformers. Cut abandoned raceway flush with surface of concrete pad.

B. Remove existing transformers and salvage.

3.3 INSTALLATION

A. Install per manufacturer's instructions.

3.4 ADJUSTING

A. Adjust all switches, access doors, operating handles for free mechanical and/or electrical operation as described in manufacturer's instructions.

B. Adjust primary taps so that secondary voltage is within 2 percent of rated voltage.

3.5 CLEANING

A. Clean transformers to remove construction debris, dirt, shipping materials.

B. Repaint scratched or marred exterior surfaces to match original finish.

END OF SECTION

SECTION 16411

DISCONNECT SWITCHES

PART 1 GENERAL

1.1 SUMMARY

A. Section includes fusible and non fusible switches.

1.2 RELATED SECTIONS

1. Section 16050: Common Work Results for Electrical
2. Section 16075: Identification for Electrical Systems

1.3 REFERENCES

A. NEMA FU 1 - Low Voltage Cartridge Fuses.

B. NEMA KS 1 - Enclosed and Miscellaneous Distribution Equipment Switches (600 Volts Maximum).

C. NETA ATS - Acceptance Testing Specifications for Electrical Power Distribution Equipment and Systems.

1.4 SUBMITTALS

A. Product Data: Submit switch ratings and enclosure dimensions.

PART 2 PRODUCTS

2.1 FUSIBLE SWITCH ASSEMBLIES

A. Manufacturer: Square D Company or Approved Equal.

B. Fusible Switch Assemblies: Horsepower rated, heavy-duty type; quick-make, quick-break, load interrupter enclosed knife switch with externally operable handle interlocked to prevent opening front cover with switch in ON position. Handle lockable in OFF position.
   1. Fuse Clips: Designed to accommodate Class R fuses only and reject all others.

C. Nonfusible Switch Assemblies: Horsepower rated, heavy-duty type; quick-make, quick-break, load interrupter enclosed knife switch with externally operable handle interlocked to prevent opening front cover with switch in ON position. Handle lockable in OFF position.

D. Product Description: NEMA KS 1, Type HD with externally operable handle interlocked to prevent opening front cover with switch in ON position, enclosed load interrupter knife switch. Handle lockable in OFF position.

E. Fuse clips: Designed to accommodate NEMA FU 1, Class J fuses.

F. Enclosure: NEMA KS 1, to meet conditions. Fabricate enclosure from steel finished with manufacturer's standard gray enamel.
   1. Interior Dry Locations: Type 1.
   2. Exterior Locations: Type 3R.

G. Service Entrance: Switches identified for use as service equipment are to be labeled for this application. Furnish solid neutral assembly and equipment ground bar.

H. Furnish switches with entirely copper current carrying parts.

2.2 NONFUSIBLE SWITCH ASSEMBLIES

A. Manufacturer: Square D Company or Approved Equal.

B. Nonfusible Switch Assemblies: Horsepower rated, heavy-duty type; quick-make, quick-break, load interrupter enclosed knife switch with externally operable handle interlocked to prevent opening front cover with switch in ON position. Handle lockable in OFF position.

C. Product Description: NEMA KS 1, Type HD with externally operable handle interlocked to prevent opening front cover with switch in ON position enclosed load interrupter knife switch. Handle lockable in OFF position.

D. Enclosure: NEMA KS 1, to meet conditions. Fabricate enclosure from steel finished with manufacturer's standard gray enamel.
   1. Interior Dry Locations: Type 1.
   2. Exterior Locations: Type 3R.

E. Service Entrance: Switches identified for use as service equipment are to be labeled for this application. Furnish solid neutral assembly and equipment ground bar.

F. Furnish switches with entirely copper current carrying parts.

2.3 FUSES

A. Manufacturers:
   1. Bussmann.
   2. Gould Shawmut.
   3. Littelfuse.
   4. Or Approved Equal.

B. Fuses 600 Amperes and Less: UL 198E, Class RK5, sized as indicated on Drawings.

C. Interrupting Rating: 200,000 RMS amperes.

2.4 SWITCH RATINGS

A. Switch Rating: Horsepower rated for AC or DC as indicated on Drawings.

B. Short Circuit Current Rating: UL listed for 10,000 rms symmetrical amperes when used with or protected by Class H or K fuses (30-600 ampere) 200,000 rms symmetrical amperes when

used with or protected by Class R or Class J fuses (30-600 ampere switches employing appropriate fuse rejection schemes). 200,000 rms symmetrical amperes when used with or protected by Class L fuses (800-1200 ampere).

PART 3 EXECUTION

3.1 EXISTING WORK

A. Disconnect and remove abandoned enclosed switches.

B. Maintain access to existing enclosed switches and other installations remaining active and requiring access. Modify installation or provide access panel.

C. Clean and repair existing enclosed switches to remain or to be reinstalled.

3.2 INSTALLATION

A. Install enclosed switches plumb. Provide supports in accordance with Section 16050.

B. Height: 4 feet (1500 mm) to operating handle.

C. Install fuses for fusible disconnect switches.

D. Install engraved plastic nameplates in accordance with Section 16075.

E. Apply adhesive tag on inside door of each fused switch indicating NEMA fuse class and size installed.

3.3 FIELD QUALITY CONTROL

A. Inspect and test in accordance with NETA ATS, except Section 4.

B. Perform inspections and tests listed in NETA ATS, Section 7.5.

END OF SECTION

SECTION 16442

600-VOLT RATED PANELBOARDS & CB

PART 1 GENERAL

1.1 SUMMARY

A. Section includes distribution and branch circuit panelboards and circuit breakers.

1.2 RELATED SECTIONS

A. Section 16060: Grounding and Bonding for Electrical Systems

B. Section 16075: Identification for Electrical Systems

1.3 REFERENCES

A. ANSI/IEEE C2 National Electrical Safety Code.

B. NECA Standard of Installation

C. NEMA AB 1 Molded Case Circuit Breakers.

D. NEMA ICS 6 Enclosures

E. NEMA PB 1 Panelboards.

F. NEMA PB 1.1 Instructions for Safe Installation, Operation and Maintenance of Panelboards Rated 600 Volts or Less.

G. NETA ATS (National Electrical Testing Association) - Acceptance Testing Specifications for Electrical Power Distribution Equipment and Systems

H. NFPA 70 NEC

1.4 SUBMITTALS

A. Shop Drawings: Indicate outline and support point dimensions, voltage, main bus ampacity, integrated short circuit ampere rating, circuit breaker and fusible switch arrangement and sizes.

B. Product Data: Submit catalog data showing specified features of standard products.

C. Test Report:
   1. Factory Tests:

      a. Certified factory test reports shall be submitted for manufacturer performed routine factory tests, including tests defined in NETA ATS. Results of factory tests

performed shall be certified by the manufacturer, or an approved testing laboratory, and submitted within 7 days following successful completion of the tests. The manufacturer's pass-fail criteria for tests specified in paragraph 3.3 shall be included.

D. Installation, Operation, and Maintenance Manuals: Submit spare parts listing; source and current prices of replacement parts and supplies; and recommended maintenance procedures and intervals.

1.5 EXTRA MATERIALS

A. Furnish two of each panel board key. Panelboards keyed alike to Owner's current keying system.

PART 2 PRODUCTS

2.1 DISTRIBUTION AND BRANCH CIRCUIT PANELBOARDS

A. Manufacturers:
1. Allen Bradley
2. Cutler Hammer
3. General Electric Co.
4. Siemens.
5. Square D Co.
6. Or Approved Equal.

B. Product Description
1. NEMA PB 1, circuit breaker type distribution, lighting and appliance branch circuit panelboard.

C. Service Conditions:
1. Temperature: 104 degrees F ambient
2. Altitude: 100 feet above sea level.

D. Panelboard Bus
1. Silver plated copper current carrying components, ratings as indicated.
2. Main bus ampacity shall be equal to the main circuit breaker frame size rating.
3. Furnish copper ground bus in each panelboard.

E. Minimum integrated short circuit rating
1. Panelboards rated 240-Volts - 10,000 amperes RMS symmetrical
2. Panelboards rated 480-Volts - 42,000 amperes RMS symmetrical
3. Circuit Breaker rating shall match or exceed the panel interrupting rating
4. Series rated circuit breakers are not acceptable

F. Enclosure:
1. Indoor Installation:

a. NEMA PB 1, Type 1, gasketed, steel construction, minimum 6 inches deep, 20 inches wide suitable for flush or surface mounting as indicated.
b. Flush or surface cabinet front with concealed trim clamps, concealed hinge, metal directory frame, and flush lock keyed alike. Finish in manufacturer's standard gray enamel.
c. Fully hinged door with flush lock and metal directory frame.
d. Finished in manufacturer's standard gray enamel (ANSI 61).

2. Outdoor Installation:

a. Panel shall be housed inside an outer weatherproof, corrosion resistant, NEMA 4X, 316 stainless steel enclosure constructed as follows:
1) Steel support frame with body stiffeners for added strength and minimum 12 gauge 316 stainless steel panels all around.
2) Steel panels shall have seams that are continuously welded and ground smooth with no holes or knockouts.
3) The outer door shall provide two-door protection, isolation of electrical equipment and easy access to the interior section doors and devices.
4) Provide rolled lip around three sides of each outer door and along the top of enclosure opening to channel away liquids and contaminants.
5) Provide oil-resistant door gasket attached with oil resistant adhesive and held in place with steel retaining strips.
6) Provide heavy gauge steel continuous piano hinged, 3-point latch, hasp and staple for pad-locking.
7) Provide continuous external support channels for floor mounting, leveling and anchoring the assembly.
8) Provide heavy duty removable lifting angles and/or lugs.
9) Provide suitable grounding stud on door and body.
10) Provide adequate cable entry space and conduit fittings approved for NEMA Type 4X enclosure for top or bottom conduit entry as required.
11) Provide space heaters with thermostat control in each section to prevent condensation.

2.2 MOLDED CASE CIRCUIT BREAKERS

A. NEMA AB 1, bolt-on type thermal magnetic and instantaneous magnetic trip circuit breaker. Circuit breaker thermal elements shall be of the bimetallic type and shall be capable of withstanding sustained overload and short-circuit currents without injury and without affecting the calibration of the bimetallic element. The thermal element shall have inverse time characteristics. The instantaneous elements shall trip the circuit breaker at the minimum standard trip setting.

B. Provide common trip handle for multiple pole circuit breakers.

C. Provide type SWD for lighting circuits and type HACR circuit breakers for air conditioning equipment circuits.

D. Provide Class A ground fault interrupter circuit breakers as indicated.

E. Trip rating shall be as indicated.

F. Minimum integrated short circuit rating
   1. Circuit Breakers rated 240-Volts - 10,000 amperes RMS symmetrical
   2. Circuit Breakers rated 480-Volts - 42,000 amperes RMS symmetrical
   3. Circuit Breaker rating shall match or exceed the panel interrupting rating
   4. Series rated breakers are not acceptable

PART 3 EXECUTION

3.1 EXISTING WORK

A. Disconnect and remove abandoned panelboards. Verify all branch circuits are no longer in use before disconnecting.

B. Maintain access to existing panelboard that remain active and require access. Modify installation or provide access panel.

C. Clean and repair existing panelboards to remain or to be reinstalled.

3.2 INSTALLATION

A. Install panelboards in accordance with NEMA PB 1.1 and NECA "Standard of Installation", NFPA 70 and IEEE C2.

B. Install panelboards plumb.

C. Install recessed panelboards flush with wall finishes.

D. Mounting height: 6 feet to top of panelboard. Install panelboards taller than 6 feet with bottom no more than 4 inches above floor.

E. Install filler plates for unused spaces in panelboards.

F. Provide typed circuit directory for each panelboard. Revise directory to reflect circuiting changes to balance phase loads.

G. Install engraved plastic nameplates in accordance with these Specifications.

H. Ground and bond panelboard enclosure according to these Specifications. Connect equipment ground bars of panels in accordance with NEC.

3.3 FIELD QUALITY CONTROL

A. Field Inspect and testing shall be in performer under the provisions of NETA ATS 7.6 (1) (1) – Circuit Breaker, Low Voltage, Insulated Case/Molded Case, as outlined below:
   1. Visual and Mechanical Inspection:
      a. Compare equipment nameplate data with drawings and specifications.
      b. Inspect physical and mechanical condition.
      c. Inspect circuit breaker for correct mounting.
      d. Operate circuit breaker to insure smooth operation.

e. Inspect case for cracks or other defects.
f. Verify appropriate anchorage, required area clearances, physical damage, and correct alignment.
g. Inspect all doors, panels, and sections for corrosion, dents, scratches, fit, and missing hardware.
h. Verify that fuse and/or circuit breaker sizes and types correspond to drawings.
i. Perform circuit breaker inspections and operation test.

3.4 ADJUSTING

A. Rearrange circuits in panelboard to balance phase loads to within 20 percent of each other.

B. Maintain proper phasing for multi-wire branch circuits.

END OF SECTION

SECTION 16500

LIGHTING

PART 1 GENERAL

1.1 SECTION INCLUDES:

A. Lighting fixtures, lamps, ballasts, hangars, trim and diffusers.

B. Supports, suspension systems, and blocking.

1.2 SUBMITTALS

A. Product Data:
   1. Light fixtures.
   2. Lamps.
   3. Ballasts.

1.3 WARRANTEE

A. Fixtures and ballasts shall have a minimum five year warrantee,

PART 2 PRODUCTS

2.1 LIGHTING FIXTURES

A. Provide lighting fixtures, lamps, ballasts and accessories complete and ready for operation. Furnish the fixtures as indicated on the Drawings and as listed in the fixture schedule. Verify in all cases, the lengths and quantity of fixtures necessary to achieve the indicated results.

B. Provide lighting fixtures in the finishes and colors as noted on the Drawings.

C. Provide the UL and IBEW labels on all lighting fixtures.

D. Equip fluorescent fixtures with CBM-ETL labeled ballasts provided with internally mounted automatic reset thermal protectors and silver plated sockets.

E. All lighting fixtures shall have published photometric tests conducted by Electrical Testing Laboratories. Make available the test results upon request. Testing shall include candlepower distribution curves, total fixture efficiency, brightness and shielding angles in longitudinal and transverse directions.

F. Observe the requirements of the CBC Section 2606 regarding plastic lighting diffusers. Fixtures and auxiliary equipment mounted against combustible material shall be approved for such installation.

G. Make-up fixtures with Type AF or equal fixture wire. Provide an identified, approved landing lug for equipment ground wires.

2.2 LENSES, REFLECTORS, AND TRIM

A. Provide specialty lenses and frames such as Holophane type low glare lenses as indicated on the lighting fixture schedule. Verify that the fixture frames and trims are designed to function with the selected lens and the particular mounting conditions.

B. Provide substantial light sealing and separation between individual lamp rows in the louver assemblies of 3-lamp recessed parabolic fluorescent fixtures. This shall be accomplished by the provisioning of ballast compartment covers between cells even if no ballasts are contained therein.

2.3 LAMPS

A. Fluorescent lamps:
1. All fluorescent lamps shall be low mercury, Federal EPA TCLP compliant, extended life lamps.
2. T-8 fluorescent lamps shall be extended performance, 4100 Kelvin, 86 CRI color rendering, long-life 24,000 hrs @ 3 hrs/start, GE Ecolux XL SPX lamps.
3. Compact fluorescent lamps shall be low mercury, 3500 Kelvin, 82 CRI color rendering, 10,000 hrs @ 3 hrs/start, Philips "ALTO PL-T", or Sylvania "DULUX ECOLOGIC".
4. Provide 4100 Kelvin, tri-phosphor, energy saving, slim-line or high output fluorescent lamps where lamps longer than four feet long are specified.
5. Furnish all fluorescent lamps of the same type, throughout the Project, from the same manufacturer.

B. High intensity discharge (HID) lamps:
1. All HID lamps shall be mercury and lead free, Federal EPA TCLP compliant, ECO lamps.
2. Provide clear high pressure sodium lamps, Sylvania "LUMALUX Mercury Free /ECO".
3. Exterior metal halide lamps shall be clear, unless otherwise noted.
4. Interior metal halide lamps shall be coated, unless otherwise noted.
5. Furnish all HID lamps of a particular type throughout the Project from the same manufacturer.

C. Incandescent lamps:
1. Provide 130 volt rated, long service life lamps.
2. Lamps shall be A-21, frosted type, in wattage as indicated.

2.4 BALLASTS

A. Electronic Ballasts (non-dimming):
1. Provide fully electronic or hybrid style ballasts.
2. Power factor shall be greater than .85.
3. Ballast factor shall be greater than .87.
4. Total harmonic distortion (THD) shall not exceed:

   a. 20% for a four foot fluorescent ballast
   b. 32% for an eight foot fluorescent ballast.
5. Provide UL listed ballasts that meet applicable California Energy Commission requirements.

6. Ballasts must be of the rapid start type; instant start is not acceptable.
7. Acceptable manufacturer: Magnetek, Motorola, or Approved Equal.

B. Dimming Ballasts:
1. Provide Lutron EcoSystem “intelligent” dimming ballast or Approved Equal.

C. Rapid Start Fluorescent Ballasts:
1. Energy saving type, class P, CBM certified,
2. Ballasts shall have an "A" sound rating.
3. Acceptable manufacturers: Universal, Advance, Valmont, or Approved Equal.
4. Provide zero degree ballasts where used in exterior fixtures.

D. HID Ballasts:
1. Provide constant wattage, high power factor type ballasts.

PART 3 EXECUTION

3.1 GENERAL

A. Install fixtures in straight, true lines and without visible gaps between fixtures and building surfaces and between fixtures in continuous rows. For linear wall mounted fixtures, ensure that the wall surface is finished flat, straight, and free of imperfections prior to mounting the fixtures. Replace or repair lighting fixture installations that are out of plumb or that have obvious gaps or misalignment.

B. Provide fixtures with the appropriate trim frames, flanges, canopies, and finish accessories to accommodate the ceiling conditions. Prior to ordering fixtures, and throughout the Project, verify the exact ceiling types, finishes, and thicknesses and coordinate the fixture installation therewith.

C. Refer to the Drawings, particularly the architectural elevations and reflected ceiling plans, in determining the exact mounting location and height of lighting fixtures. For wall mounted or suspended fixtures that do not have the mounting heights clearly indicated, contact the Owner for clarification prior to ordering pendants and installing the fixtures.

D. Following installation of HID and fluorescent lighting fixtures, and prior to completion of the Project, perform a burn in test of the lights. The burn in test shall consist of operating the fixtures continuously for a minimum of forty-eight (48) hours. Replace lamps that are inoperative or that show signs of flicker or color wander. If building power is not available for the burn in test, then provide a portable generator, fuel, and temporary connections for the stipulated period.

E. Provide final touchup painting to repair fixture finishes which are nicked or marred during installation. Obtain the paint from the fixture manufacturer.

3.2 AUDIBILITY

A. Fixtures shall be free from any undesirable hum, vibration, or noise. Provide lighting equipment suitable for the intended ambient sound levels. Where necessary to meet this

criteria, provide additional means of sound deadening, whether or not specifically indicated. Fixtures that are found to be unsatisfactory in the opinion of the Owner shall be removed and replaced at the Contractor's expense.

3.3 SUPPORTS AND BLOCKING

A. Provide hangers, suspension cables, and blocking for lighting fixtures that will provide support independent of suspended ceilings, ceiling or wall surfaces, and electrical outlet boxes. Exception: Fixtures less than 12 inches in all dimensions and weighing less than six pounds may be permitted to be supported from the electrical outlet box if the box itself is independently supported by blocking or hangars.

B. Refer to the Drawings for specific blocking details and seismic mounting details for lighting fixtures.

3.4 EXTERIOR POLE MOUNTED FIXTURES AND BOLLARDS

A. Provide pole base footings in accordance with the Drawings. Footings shall be reinforced concrete with anchor bolts sized and located in accordance with the manufacturer's recommendations for the geographic locality. Provide reinforced concrete in accordance with the requirements as stipulated elsewhere in these Specifications. Forms for pole bases shall be placed using resin-lined Sonotube concrete forms or Approved Equal to give a smooth finished appearance. Patch and sack cracks and voids in the bases to match the surrounding surface.

B. Verify the exact location of underground facilities in the vicinity of pole bases prior to boring holes and bring potential conflicts to the attention of Owner. Use an anchor bolt template as provided by the manufacturer for the placement of anchor bolts and substantially brace the forms to ensure that the base remains straight and plumb. Refer to the Drawings for fixture orientation and alignment, and utilize a transit site or snap line to verify same.

C. Exposed surfaces of concrete bases or footing shall be finished smooth without cracks, voids, or jagged edges. Chamfer and float the base after pouring concrete to achieve a finished appearance. In order to allow leveling of the pole, install the pole base-plate one inch above the top of the concrete footing. Level the pole plumb and pack the space under the base-plate with Embeco dry pack grout.

D. For fixtures with adjustable aiming or reflectors, arrange to perform a final adjustment of aiming at night under the direction of Owner.

3.5 OBSTRUCTIONS

A. Verify throughout the Project that mounting locations and suspension systems remain free of obstructions. Suspended or pendant mounted fixtures must be free to swing 45 degrees in all directions without hitting obstructions or other fixtures. Provide seismic rated swivel ball hangars for pendant mounted lighting fixtures to achieve the proper swing.

END OF SECTION

SECTION 16720
FIRE ALARM SYSTEM

PART 1 GENERAL

1.1 SCOPE OF WORK

A. Provision of a new fully addressable fire alarm system including a control panel, programming unit, and addressable initiation and notification devices.

B. Fire alarm initiation and signal devices.

C. Conduit and wiring for fire alarm system.

D. 1-year Central Station monitoring service.

1.2 SUBMITTALS

A. Provide submittals for the following items:
   1. Fire alarm annunciator.
   2. Fire alarm signal extender panels.
   3. Fire alarm initiation devices.
   4. Fire alarm notification appliances.
   5. Interface devices and accessory components.

B. Provide a complete deferred approval fire alarm system submittal package to the County of Sonoma, Department of Emergency Services, Fire Division. The package shall include, but not be limited to, layout plan drawings, riser diagram, wiring diagrams, battery calculations, voltage drop calculations, bill of materials, device and equipment catalog cut sheets, and California State Fire Marshall (CSFM) listing sheets.

C. Prepare complete drawings of the entire fire alarm system. The design drawings shall include a point-by-point wiring diagram identifying initiation and notification signal zones conductor colors. Identify devices according to the manufacturer's catalog numbers and indicate their locations on the drawings.

D. The scope of the deferred approval and drawing packages shall include the complete fire alarm system, including all elements of the existing system that are to be reused.

E. In addition to an approved copy of the fire alarm system submittal, provide a set of comprehensive operating instructions; programming documentation; and system maintenance, testing and alarm documentation to the Owner.

F. At project completion the factory authorized technician shall provide all on-site software modifications and provide a written report attesting to the proper operations of the completed system.

PART 2 PRODUCTS

2.1 FIRE DETECTION AND ALARM SYSTEM

A. Manufacturer:
   1. Notifier – NFS-320 FACP with appropriate accessories or Approved Equal.

2.2 SYSTEM DESIGN

A. The fire alarm and detection system modifications shall maintain a complete, supervised system. The system shall be activated into the alarm mode by actuation of any alarm-initiating device. The system shall remain in the alarm mode until initiating device is reset and the fire alarm control panel is reset and restored to normal. Alarm initiating devices shall be connected to initiating device circuits, Style D, or to signal line circuits in accordance with NFPA 72. Alarm indicating appliances shall be connected to indicating appliance circuits, in accordance with NFPA 72. All textual, audible, and visual appliances and systems shall comply with NFPA 72.

B. The system shall be a complete, electrically supervised fire detection and notification system, microprocessor based operating system having the following; capabilities, features and capacities:
   1. Single addressable loop
   2. 252 addressable initiation device capability as a minimum.
   3. Addressable devices shall be polarity insensitive.
   4. Addressable devices shall operate on “standard wire” no special twist or shield shall be required
   5. 4 notification circuits capable of Style Y (Class B), or 2 notification circuits capable of Style Z (Class A).
   6. Optional relays or LED drivers for graphic annunciation.
   7. Optional Remote annunciator/control panel.
   8. Optional DACT capable of sending point information to a Central Station depending on protocol required by the Central Station.
   9. 80-character backlit LCD display with 40 character Customer defined message.
   10. Be programmable from system keypad or Laptop computer.

C. System Operation:
   1. Activation of any manual pull station, smoke detector, heat detector or sprinkler waterflow switch shall activate the building notification appliances.
   2. Activation of any alarm causing devices shall signal the Central Station to an alarm condition, if the DACT is installed
   3. Activation of a supervisory device shall sound an audible and light LED at the control panel to signal a supervisory condition.
   4. Activation of a supervisory causing device shall signal the Central Station to a supervisory condition, if the DACT is installed
   5. Activation of a trouble shall sound an audible and light an LED at the control panel to signal a trouble condition.
   6. Activation of a trouble shall signal the Central Station to a trouble condition, if the DACT is installed.

2.3 FIRE ALARM CONTROL PANEL

A. The control panel shall have digital communications, addressable devices, control points and relays. The system shall have the following:
   1. Application specific fire detection
   2. Auto configuration, which, reads all addressed devices on the loop and automatically creates a basic general alarm configuration
   3. Manual changes by the Owner or Notifier distributor without special tools.
   4. Windows type software to make configurations easier.
   5. Eighty- (80) character backlit LCD display with full system control and up to forty (40) character available for custom message on display.
   6. Fully field programmable from the local display or by a PC configuration tool.
   7. 800-event history log, minimum.
   8. Alarm verification
   9. Cross zoning
   10. Positive Alarm Sequence
   11. Walk test by a single individual in either a silent or audible mode.
   12. Maintenance and Technician level with Password protection.
   13. Up to 252 addressable initiation devices.
   14. Addressable initiating devices shall be polarity insensitive
   15. Addressable initiating devices shall operate on standard wire, no special twist or shield shall be required
   16. 4 notification circuits capable of Style Y (Class B), or 2 notification circuits capable of Style Z (Class A).
   17. Optional Peer-to-Peer networking with at least 100 other comparable panels.

B. The system shall support off site reporting modules within the enclosure shall include one of the following modules in accordance with the requirements of this specific project site:
   1. A system DACT shall be supplied with the following:

      a. Support two (2) lines and up to four (4) accounts
      b. Can transmit serial information by point to the Central or Remote Station.
      c. Be capable of transmitting information in the following protocols as a minimum; SIA DCS 8,SIA DCS 20, Ademco Contact ID, 3/1 1400 Hz, 3/1 2300 Hz, 4/2 1400 Hz and 4/2 2300Hz.
   2. A Municipal Tie/Lease Line module shall provide local energy output for municipal call box connection or a reverse polarity output for lease line connection.

C. Power Supply:
   1. The power supply shall be capable of 6 amps. A maximum of 3.0 amps available for the NAC circuits. This can be expanded to 6 amps by adding an additional transformer. The power supply/battery charger can support at least 18 AH battery sets.
   2. Provide self-contained, automatically recharging batteries. Upon failure of incoming line power, the batteries shall provide a minimum of 24 hours of standby power followed by 5 minutes of alarm operation. Provide batteries that are rated at 125% minimum, of the above determined capacity.

D. Enclosure:

1. The system enclosure shall be sized to carry all the modules required to meet the specification requirements.

E. Printer Interface:
1. An interface for a printer shall be provided to allow system events to be printed.

2.4 FIELD PROGRAMMING UNIT

A. The programming tool shall program the intelligent devices addresses. The unit shall test the loop wiring for grounds, opens and shorts. Systems not having this ability shall test all the above items and provide a written report documenting the testing procedure as required in the submittal section.

B. The system programmer shall print labels for all addressable devices and contain the complete SLC circuit and device numbers.

2.5 ADDRESSABLE INITIATION DEVICES

A. Smoke detectors shall be intelligent photoelectric detectors with thermal element that provides digital communications to the FACP. Detectors shall be listed for use as open area protective coverage, in duct installation and duct sampling assembly installation and shall be insensitive to air velocity changes. Detectors shall be programmable as application specific, selected in software for a minimum of eleven environmental fire profiles unique to the installed location. These fire profiles shall eliminate the possibility of false indications caused by dust, moisture, RFI/EMI, chemical fumes and air movement while factoring in conditions of ambient temperature rise, obscuration rate changes and hot/cold smoke phenomenon into the alarm decision to give the earliest possible real alarm condition report. The detector shall be designed to eliminate calibration errors associated with field cleaning of the chamber. The detector shall support the use of a relay, or LED remote indicator. The detector shall not exceed 2.5 inches of extension below the finish ceiling. Detector wiring shall not require any special cable. The intelligent smoke detector shall be Notifier FSP-851 or Approved Equal.

B. Addressable thermal detectors shall be a rate of rise detectors rated at 135°F. The detector shall be a Notifier FST-851 or Approved Equal.

C. Detector bases shall be low profile twist lock type with screw clamp terminals and self-wiping contacts. Bases shall be installed on an industry standard, 4" square or octagonal electrical outlet box. Detectors located in concealed locations (above ceiling, etc.) shall have a remote visible indicator lamps. Bases shall be supplied with the following features as required for performance to this specification. Select the bases based on manufacturer's requirements for the devices specified

D. Intelligent interface modules shall be supplied for the monitoring of contact type initiation devices and for the control of electrical devices as required by project conditions. Modules shall be intelligent analog signaling circuit interface modules as follows:
1. A single circuit intelligent signaling circuit interface module for monitoring alarm, trouble, supervisory or status contact type devices.
2. The single circuit interface shall also be available as a freestanding shrink-wrapped unit with pigtail wire leads for direct mounting with contact devices.

3. A single circuit intelligent signaling circuit interface module for monitoring alarm, trouble, supervisory security or status contact type devices with form C software programmable control contacts for the management of specified electrical loads as required by this specification.
4. Dual circuit intelligent signaling circuit interface module for monitoring alarm, trouble, supervisory security or status contact type devices.

2.6 NOTIFICATION APPLIANCES

A. The Horn or horn/strobe appliance as indicated on the drawings shall be a synchronized temporal horn with a synchronized strobe light with multiple candela taps to meet the intended application. The appliance shall be red or white as indicated on the drawings. The strobe light taps shall be adjustable for 15/75, 30/75, 75, and 110 candela. The appliance shall be red for wall mounted and white for ceiling mounted. Ceiling mounted appliances shall be rated for that application. Provide Notifier P4R series devices or Approved Equal.

B. The strobe only appliance as indicated on the drawings shall be a synchronized/non-synchronized strobe light with multiple candela taps to meet the intended application. The strobe light taps shall be adjustable for 15/75, 30/75, 75, and 110 candela. The appliance shall be red for wall mounting and white for ceiling mounted. Ceiling mounted appliances shall be rated for that application. The model number shall be Notifier SR series or Approved Equal.

2.7 CONDUIT, WIRE, & CABLE

A. Conduit: Conduit and fittings shall comply with UL 6, UL 1242 and UL 797.

B. Wiring: Wiring for 120-volt ac power shall be No. 12 AWG minimum. Wiring for low voltage dc circuits shall be No. 14 AWG minimum. Power wiring (over 28 volts) and control wiring shall be isolated. All wiring shall conform to NFPA 70. System field wiring shall be solid copper and installed in metallic conduit or electrical metallic tubing, except rigid plastic conduit may be used under slab-on-grade. All conductors shall be color-coded. Conductors used for the same functions shall be similarly color-coded. Wiring code color shall remain uniform throughout the circuit. Pigtail or T-connections to alarm initiating, supervisory circuits, and alarm indicating circuits are prohibited. T-tapping using screw terminal blocks are allowed for addressable systems.

C. Special Tools and Spare Parts: Special tools necessary for the maintenance of the equipment shall be furnished. Two spare fuses of each type and size required and five spare lamps and LED's of each type shall be furnished. Two percent of the total number of each different type of detector, but no less than two each, shall be furnished. Fuses and lamps shall be mounted in the fire alarm panel.

PART 3 EXECUTION

3.1 INSTALLATION

A. All work shall be installed as shown and in accordance with the manufacturer's diagrams and recommendations, unless otherwise specified. Upon initial installation, all wiring outlets,

junction, pull and outlet boxes shall have dust covers installed. Dust covers shall not be removed until wiring installation when permanent dust covers or devices are installed. Smoke detectors shall not be installed until the building has been thoroughly cleaned.

B. Boxes: All devices and appliances shall be mounted to or in an approved electrical box. Boxes shall be installed plumb and firmly in position. Extension rings with blank covers shall be installed on junction boxes where required. Junction boxes served by concealed conduit shall be flush mounted.

C. Wiring: Conduit size for wiring shall be in accordance with NFPA 70. Wiring for the fire alarm system shall not be installed in conduits, junction boxes, or outlet boxes with conductors of lighting and power systems. No more than one conductor shall be installed under any screw terminal. All circuit conductors entering or leaving any mounting box, outlet box enclosure or cabinet shall be connected to screw terminals with each terminal marked in accordance with the wiring diagram. Connections and splices shall be made using screw terminal blocks. Do not splice fire alarm conductors in underground or exterior pull-boxes. Crimp-on type spade lugs shall be used for terminations of stranded conductors to binder screw or stud type terminals. Spade lugs shall have upset legs and insulation sleeves sized for the conductors. The use of wire nut type connectors are prohibited in the system. Wiring within any control equipment shall be readily accessible without removing any component parts. The fire alarm equipment manufacturer's representative shall be present for the connection of wiring to the control panel.

D. Marking: Each conductor shall be identified as shown on the drawings with wire markers at terminal points. Attach permanent wire markers within 2 inches of the wire termination. Marker legends shall be visible. A consistent color code for fire alarm system conductors throughout the installation. "Fire alarm system" decal or indicator shall be applied to all junction box covers and visible conduits in each room or space.

E. Auxiliary Equipment: Relays and other devices to be mounted in auxiliary panels are to be securely fastened to avoid false indications and failures due to shock or vibration.

3.2 FIELD QUALITY CONTROL AND PRELIMNARY TESTING:

A. Complete testing and certification shall be performed by a certified Notifier technician or manufacturer representative.

B. Preliminary Tests: Upon completion of the installation, the system shall be subjected to functional and operational performance tests including tests of each installed initiating and notification appliance. Tests shall include the meggering of all system conductors to determine that the system is free from grounded, shorted, or open circuits. The megger test shall be conducted prior to the installation of fire alarm equipment. If deficiencies are found, corrections shall be made and the system shall be retested to assure that it is functional.

C. The Contractor shall notify the Owner's Representative 30 days before the preliminary and acceptance tests are to be conducted. The tests shall be performed in accordance with the approved test procedures in the presence of the Contracting Officer. The control panel manufacturer's representative shall be present to supervise all tests. The Contractor shall furnish all instruments and personnel required for the tests.

D. Preliminary Testing Procedure:
   1. All Alarm Initiating Devices shall be observed and logged for correct zone and sensitivity. These devices and their bases shall be tagged with adhesive tags located in an area not visible when installed, showing the initials of the installing technician and date.
   2. Wiring runs shall be tested for continuity, short circuits and grounds before system is energized. Resistance, current and voltage readings shall be made as work progresses.
   3. The acceptance inspector shall be notified before the start of the required tests. All items found at variance with the drawings or this specification during testing or inspection by the acceptance inspector shall be corrected.
   4. All test equipment, the installing contractor shall make instruments, tools and labor required to conduct the system tests available. The following equipment shall be a minimum for conducting the preliminary and acceptance tests:

      a. Ladders and scaffolds as required to access all installed equipment.
      b. Multi-meter for reading voltage, current and resistance.
      c. Two way radios, and flashlights.
      d. A manufacturer recommended device for measuring airflow through air duct smoke detector sampling assemblies.
      e. Decibel meter.
      f. In addition to the testing specified to be performed by the installing contractor, the installation shall be subject to test by the acceptance inspector.

3.3 ACCEPTANCE TESTING:

A. Acceptance testing shall be in accordance with NFPA 72 and this specification. The recommended tests in NFPA 72 shall be considered mandatory and shall verify that all previous deficiencies have been corrected. The contractor shall be responsible for the performance of the acceptance testing, demonstrating the function of the system and verifying the correct operation of all system components, circuits, and programming.

B. Conduct the acceptance testing procedure (ATP) in the presence of the Owner's Representative, the local Fire Marshal and/or the local Fire Department.

C. The acceptance inspector shall use the system record drawings in combination with the documents specified in this specification during the testing procedure to verify operation as programmed. In conducting the ATP, the acceptance inspector shall request demonstration of any or all input and output functions. The items tested shall include but not be limited to the following:
   1. System wiring shall be tested to demonstrate correct system response and correct subsequent system operation in the event of:

      a. Open, shorted and grounded signal line circuits.
      b. Open, shorted and grounded notification circuits.
      c. Primary power or battery disconnected.
   2. System notification appliances shall be demonstrated as follows:

      a. All alarm notification appliances actuate as programmed
      b. Audibility and visibility at required levels.

3. System indications shall be demonstrated as follows:

    a. Correct message display for each alarm input at the control display.
    b. Correct annunciator light for each alarm input at each annunciator and graphic display as shown on the drawings.
    c. Correct history logging for all system activity.
4. System off-site reporting functions shall be demonstrated as follows:

    a. Correct point transmitted for each alarm input
    b. Trouble signals received for disconnect
5. Secondary power capabilities shall be demonstrated as follows:

    a. System primary power shall be disconnected for a period of time as specified herein. At the end of that period, an alarm condition shall be created and the system shall perform as specified for a period as specified.
    b. System primary power shall be restored for forty-eight hours and system-charging current shall be normal trickle charge for a fully charged battery bank.
    c. System battery voltages and charging currents shall be checked at the fire alarm control panel

D. Complete and submit to the Owner's Representative the signed "Certificate of Completion" as per NFPA 72 Section 1-7.21 following the successful completion of the witnessed acceptance testing procedure..

3.4 DOCUMENTATION:

A. System documentation shall be furnished to the owner and shall include but not be limited to the following:
1. System record drawings and wiring details including one set of reproducible masters and drawings on a CD ROM in a DXF format suitable for use in a CAD drafting program. Original drawings must be provided by the systems engineering firm.
2. System operation, installation and maintenance manuals.
3. System matrix showing interaction of all input signals with output commands.
4. Documentation of system voltage, current and resistance readings taken during the installation, testing and ATP phases of the system installation.
5. System program showing system functions, controls and labeling of equipment and devices.

3.5 SERVICES:

A. The contractor shall warrant the entire system against mechanical and electrical defects for a period described in the contract general conditions. This period, shall begin upon completed certification and test of the system or upon first beneficial use of the system, determined by the Engineer, whichever is earlier.

B. The contractor performing the contract services shall be qualified and listed to maintain ongoing certification of the completed system to the UL for specific installed system listing.

C. The installation contractor shall furnish training as follows for a minimum of two employees of the system user:
   1. Training in the receipt, handling and acknowledgment of alarms.
   2. The total training requirement shall be a minimum of 2 hours, but shall be sufficient to cover all items specified.

END OF SECTION

SECTION 16750
TELECOMMUNICATIONS GENERAL REQUIREMENTS

PART 1 GENERAL

1.1 SECTION INCLUDES

A. Scope of Work

B. Codes and Specifications

C. General Requirements and Conditions

D. Qualifications of Subcontractors

E. Product Requirements

F. Submittals

G. Record Drawings

H. Definitions

1.2 RELATED SECTIONS

A. Section 16128: Raceway and Boxes

B. Section 16751: Telecommunications Acceptance Testing

C. Section 16752: Telecommunications Materials and Methods

D. Section 16753: Telecommunications Cable

E. Section 16754: Telecommunications Demolition

F. Section 16755: Telecommunications Grounding and Bonding

1.3 SCOPE

A. Scope of Work

1. The scope of work includes the provision, installation, testing, and documentation of physical resources for voice and data systems including the following:

    a. Provisioning of telecommunications equipment rooms and closets including Main Distribution Facility (MDF) and Intermediate Distribution Facilitiy (IDF).
    b. Pathways including conduits, junction boxes, cable trays, ducts, wire-ways, cable supports, and cabling management systems.
    c. Freestanding (floor) and wall mounted equipment racks.
    d. Backbone cabling.
    e. Horizontal cabling.

f. Telecommunication outlets and data jacks.
g. Cross-connect fields, patch-panels, and cable terminations at the MDF and IDF's in telecommunications rooms and closets.
h. Documentation and labeling.
i. Cable testing and reports

2. The Contractor will provide all labor, materials, tools, equipment, and permits necessary for the satisfactory and timely completion of the project.

B. Statement of Work

1. The work includes, but is not limited to, the items outlined in these specifications and indicated on the drawings, as well as all incidental items required to provide complete and operable systems. The Owner and the Contractor shall mutually agree on the general conduct for the work prior to initiation of construction and shall each be responsible for following these general guidelines throughout the construction period unless modified in writing based upon discussions at the project coordination meetings.

1.4 WORK NOT INCLUDED

A. Channel service units/data service units (CSU/DSU), PBX equipment, telephone instruments, and other network interface equipment.

B. Hubs, switches, routers, transceivers, and other active network equipment.

C. Servers and workstation equipment.

D. Patch cables, baluns, and adapters.

1.5 CODES AND SPECIFICATIONS

A. All work shall be performed in compliance with the most restrictive of State, and/or Federal Codes which may govern this work and shall conform to the following codes and specifications:

1. National Fire Protection Association

a. CEC California Electrical Code.
b. NFPA 258 - Standard Test Method for Measuring Smoke Generated by Solid Materials.

2. ANSI Specifications:

a. ANSI C2-1981 National Electrical Safety Code.
b. ANSI C80.3 Specification for Zinc-coated Electrical Metallic Tubing.
c. ANSI/UL 797 Electrical Metallic Tubing.
d. ANSI/ICEA S-83-596-1994 - Fiber Optic Premises Distribution Cable Technical Requirements.

3. Electronics Industry Alliance/Telecommunications Industry Association (EIA/TIA):

a. EIA/TIA 568A - Commercial Building Telecommunications Wiring Standard.
b. EIA/TIA 569 - Commercial Building Standard for Telecommunications Pathways and Spaces.

c. EIA/TIA TSB 36 - Technical Systems Bulletin Additional Cable Specifications for Unshielded Twisted Pair Cables.
d. EIA/TIA TSB 67 - Transmission Performance Specifications for Field Testing of Unshielded Twisted-Pair Cabling Systems.
e. EIA/TIA TSB 72 - Centralized Optical Fiber Cabling Guidelines.
f. EIA/TIA 75 – Additional Horizontal Cabling Practices for Open Offices.
g. EIA/TIA 606 - Administration Standard for the Telecommunications Infrastructure of Commercial Buildings.
h. EIA/TIA 607 - Commercial Building Grounding and Bonding Requirements for Telecommunications.
i. EIA - 310-D - Cabinets, Racks, Panels, and Associated Equipment.
j. EIA/TIA 526-14 - Optical Power Loss Measurements of Installed Multimode Fiber Cable Plant.
k. EIA/TIA 455-57A - Optical Fiber End Preparation and Examination.
l. EIA/TIA 455-59 - Measurement of Fiber Point Defects Using and OTDR.
m. EIA/TIA 455-60 - Measurement of Fiber Cable Length Using an OTDR.
n. EIA/TIA 455-61- Measurement of Fiber Cable Attenuation Using an OTDR.
o. EIA/TIA 455-95 - Absolute Optical Power Test for Optical Fibers and Cables.
p. EIA RS-458A Standard Optical Waveguide Fiber Material Classes and Preferred Sizes.
q. EIA-472 Generic Specification for Optical Waveguide Fibers.

4. Federal Communications Commission (FCC) Part 15 and Part 68.
5. Title 24 - State of California Code of Regulations.
6. California Building Code and CBC Specifications.
7. Occupational Safety and Health Act (OSHA) Specifications.
8. IEEE Specifications:

   a. IEEE 802.2.
   b. IEEE 802.3.

9. NEMA VE1 Cable Tray Systems.
10. Underwriters Laboratories Specifications:

    a. UL 497 Electrical Grounding and Bonding Equipment.
    b. UL 1479 Fire Tests of Through-Penetration Firestops.
    c. UL Building Materials Directory; Through-Penetration Firestops Systems, and Fill, Void or Cavity Materials.

11. The Uniform Mechanical Code.
12. ASTM Specifications:

    a. ASTM E 814 Methods of Fire Tests of Through-Penetration Fire Stops.
    b. ASTM E 136 Test Method for Behavior of Materials in a Vertical Tube Furnace at 750 degrees C.

13. Rural Utilities Services (RUS), Bulletin 345-63, RUS Specifications for Acceptance Tests and Measurements of Telephone Plant.
14. Americans With Disabilities Act (ADA).

B. Where reference is made to a requirement that exceeds minimum code requirements, the specification requirement shall take precedence. The Contractor and owner's representative shall jointly resolve any work that is in apparent conflict with applicable codes.

C. When these specifications call for materials or construction of better quality or larger sizes than required by the above-mentioned rules and regulations, the provisions of these specifications shall take precedence.

D. In accordance with these laws, rules, and regulations, the Contractor shall provide the following:
   1. Any additional material and labor that may be required for compliance with these laws, rules, and regulations, even though the work is not mentioned in these particular specifications.
   2. All permits required by any of the legally-constituted public authorities for the installation or construction of the work.
   3. Any inspection or examinations required. Copies of certificates of all such inspections shall be delivered to the owner's representative.
   4. If any work is concealed without proper inspection and approval, the Contractor shall be responsible for all work required to open and restore the concealed areas, in addition to all required modifications.

1.6 GENERAL REQUIREMENTS AND CONDITIONS

A. Safety
   1. The Contractor shall be solely and completely responsible for conditions of the job site, including safety of persons and property during performance of work.
   2. The Contractor shall at all times comply with regulations set fourth by federal, state, and local laws, rules and regulations concerning OSHA and all applicable state labor laws, regulations, and standards.
   3. The Contractor shall ensure that all personnel working in or anywhere on the site shall be provided a hard hat, safety shoes, a face shield or safety goggles, etc. for their protection.
   4. No act, service, drawing review, or construction observance by owner's representative or any other party employed by the Owner is intended to include review or approval of adequacy of the Contractor's safety measures, in, on, or near the construction site.

B. Quality Assurance
   1. The specifications contained herein are set forth as the minimum acceptable requirements of the Contractor's Quality Assurance program. The Contractor is responsible for executing any other Quality Assurance measures necessary to ensure complete and fully functioning systems within the scope of this project.
   2. The Contractor shall ensure that all design, workmanship, materials employed, required equipment, and the manner and method of installation conforms to accepted practices. Where specific specifications do not apply, the more stringent of these specifications, industry publications, manufacturer's guidelines, or previous (similar) work at the project site shall apply.
   3. The Contractor shall also ensure that each piece of equipment is in satisfactory working condition.
   4. The Contractor shall certify that the cable manufacturers have carried out the quality assurance tests and procedures as specified herein. All cable must be manufactured by an ISO9001 Certified Manufacturer.
   5. The Contractor is responsible for ensuring that the cable packaging for shipping/storage purposes meets or exceeds the following requirements:

a. One continuous length of cable per shipping reel/container.
b. Reels must be wooden or steel, sturdy, lagged, and shall have thermal protection jackets applied prior to lagging.
c. Each reel/container shall be individually identified and marked with the length of the cable it contains. Said marking shall withstand weather and shipping conditions and remain readable.
d. For fiber optic cable, results of the 100% Attenuation tests conducted at the factory shall accompany each reel.
e. Cable shall be packed in a manner that facilitates the pre-installation tests to be conducted while the cable is still on the reel (i.e., both ends of the cable must be accessible while protected from moisture).
f. The Quality Assurance Plan employed shall include on-reel testing of fiber, coax, and UTP, including, but not limited to, OTDR, power loss, attenuation, etc. (as applicable for given cable media).

C. Manufacturer's Literature: Where these specifications call for an installation to be made in accordance with the manufacturer's recommendations, a copy of such recommendations shall always be kept on the job site and one shall be provided for the owner's representative.

D. Acceptance of Project
1. Before executing any performance testing, the Contractor shall present a test plan to the Owner for their approval.
2. The Contractor has completed all testing and delivered copies of all test results to the Owner.
3. All test results have been examined and approved by the Contractor and Owner.
4. Copies of all documentation required by this section have been delivered to the Owner.
5. All punch list items are completed to the satisfaction of the Owner.
6. Structured Cabling System Certification is provided to the Owner.
7. Following completion and/or compliance with the requirements listed above, the Contractor shall issue a Notice of Completion confirming that the project is complete. A 45-day acceptance period shall begin immediately following the issuance of the Notice of Completion.

E. Guarantee and Warranties
1. The installed structured wiring (as applicable for given cable media) system, including both inter- and intra-building sub-systems, shall be a Structured Cabling System, certified for a 15-year period.
2. The Contractor shall be responsible for correcting any problems and malfunctions that are warranty-related for the entire warranty period.
3. Copies of any extended material warranties shall be passed through to the owner's representative.
4. During the installation and up to the date of final acceptance, the Contractor shall protect all finished and unfinished work against damage and loss. In the event of such damage or loss, the Contractor shall replace or repair such work at no cost to the Owner.

F. Schedule
1. The Contractor shall submit, prior to project start, a time line for the project, showing all major dependencies and interactions with other trades. The schedule shall:

a. Identify any and all disruption to existing services and/or service shutdowns on the schedule.
b. Identify specifically the anticipated completion date for each building and each floor within each building. These completion dates shall be designated as milestones on the schedule.

2. The Contractor shall not take any facility out of service during the Owner's normal hours of operation without written agreement from the Owner. Any out-of-service activity shall be requested in writing and be coordinated 5 business days in advance. The activity should generally be scheduled after hours.
3. The Contractor shall make updates to the time line and shall provide a weekly written status report to the owner's representative.

a. Each status report shall include details of project progress and shall describe any special incidents, activities, circumstances, or interruptions of workflow.
b. The status reports shall specifically itemize areas that shall be affected by project activities planned for the succeeding week.

1.7 QUALIFICATIONS OF SUBCONTRACTORS

A. Each subcontractor employed by the Contractor to perform telecommunications work on this project shall possess a valid C-7 or C-10 (formerly C-61) Limited Specialty License for Telecommunications and must be certified to install, terminate, splice, and test copper cables, fiber optic cable, riser cable, and inside wiring. Installation, termination, and testing of telecom cabling shall only be performed by individuals who are BICSI Registered Cabling Installers, Technician Level. This requirement ensures integration into, support, maintenance, and warrantee by the Contractor of the Owner's existing telecommunications infrastructure.

B. Documentation of the above qualifications shall be provided for review by the Owner.

C. An on-site Contractor superintendent must be available at all times. Contact can be by person, telephone, or pager.

1.8 PRODUCT REQUIREMENTS

A. General Information
1. These specifications identify the minimum specifications for product quality acceptable on this project by designating a manufacturer's trade or brand name and catalog or model number and by describing attributes, performance, or other specifications.
2. Where applicable, the most recent manufactured product line consistent with the structured cable system supplier identified in the technical specification sections is to be the minimum standard for quality and performance of products to be used on this project.
3. For any product described only by attributes, performance, or specifications, the Contractor shall develop a Product Submittal in accordance with the requirements set forth herein. All Product Submittals must be reviewed with owner's representative prior to their use and installation on the project.
4. Such phrases as "or Approved Equal," "or equivalent," and "or acceptable substitute" indicate that an equivalent product may be proposed as a substitute for that which is specified. The proposed substitution must meet or exceed the attributes, performance,

or other specifications of the specified product and must be approved by the owner's representative prior to ordering and/or installation.

5. Failure of the Contractor to submit proposed substitutions for approval in the manner described above shall be sufficient cause for disapproval by the owner's representative of any substitutions otherwise proposed.
6. Physical samples may be required. If tests to determine equality and utility are required by the owner's representative, they shall be made by a testing laboratory with the acceptance of the test procedure first given by the owner's representative, at the expense of the Contractor.

B. Approved Structured Cabling System

1. The Contractor shall install telecommunications cables and equipment using one of the following Panduit Structured Cabling Systems:

   a. Panduit/Belden Integrity Structured Cabling System
   b. Panduit/Commscope Summit Structured Cabling System
   c. Panduit/Mohawk Structured Cabling System
   d. Panduit/General Cable Structured Cabling System
   e. Panduit/Essex Cable Structured Cabling System
   f. Other Approved Equal

C. Quality of Materials

1. All materials and equipment supplied by the Contractor shall be new, manufactured within one (1) year prior to installation, and meet or exceed the latest published specifications of the manufacturer. All material shall be acceptable to and approved by the Owner as meeting these specifications.
2. Telephone system materials and equipment shall be FCC Type-accepted and certified as such by supplier.
3. No material employed shall present environmental or toxicological hazards as defined by current industry specifications. All materials shall comply with CAL OSHA and EPA specifications or applicable federal or state laws or regulations.
4. Costs of all shipping to the site, inside handling, and all unusual storage requirements shall be borne by the Contractor.
5. The Contractor shall make appropriate arrangements and coordinate with authorized personnel at the site for the proper acceptance, handling, protection, and storage of materials so delivered.

1.9 SUBMITTALS

A. Shop Drawings and Supplemental Data

1. Copies of shop drawings and supplemental data shall be provided for the Owner's review. Shop drawings shall be submitted for all communications equipment, cabling, and structure pertaining to the job (distribution frames, conduit, wire, fiber optic cable, terminations, splices, etc.)
2. Design submittals (reflecting field conditions, actual cable lengths, equipment elevations, and performance expectations) shall be prepared for each system included in the project scope and provided for the Owner's review.

   a. Copies of final shop drawings and supplemental data, where called for, shall be submitted to the Owner.

3. The shop drawings and supplemental data called for shall be submitted as the instruments of the Contractor, even though they may have been prepared by a subcontractor, supplier, dealer, manufacturer, or by any other person, firm, or organization. Prior to submission, the Contractor shall undertake its own review and stamp with its acceptance, then submit to owner's representative for their review. By accepting and submitting shop drawings and supplemental data, the Contractor represents that it has determined and verified all field measurements, the physical construction, the quality of materials, the applicability of catalog numbers, and similar data, or will do so, and that it has checked and coordinated each shop drawing with the requirements of the field conditions. Conflicts between trades shall be resolved by the Contractor in the shop drawings, if possible, but in any event prior to the actual construction.
4. All shop drawings shall be drawn accurately on paper suitable for duplication.
5. Supplemental data shall include information as noted in the specification paragraphs requiring them.
6. Owner will review shop drawings and supplemental data submitted by the Contractor only for general design conformance with the concept of the project and compliance with the information given in the Contract Documents.
7. Shop drawings delineation: The shop drawings shall be drawn to scale and shall be completely dimensioned, giving the plan together with such sections as are necessary to clearly show construction detail.
8. Responsibility

    a. The shop drawings and all supporting data, catalogs, etc. shall be prepared by the Contractor or its suppliers. Therefore, the Contractor shall check the drawings of its suppliers as well as its own drawings before submission.
    b. In particular, the Contractor shall ascertain that the drawings meet all requirements of the drawings and specifications and also confirm to the structural and space conditions.
    c. Each shop drawing submitted for Owner approval shall bear a stamp certifying that it has been checked by the Contractor in accordance with the specifications. If such shop drawings show variations from Contract Documents, whether because of standard shop practice or other reasons, the Contractor shall make special mention thereof in the transmittal letter.
    d. The Contractor shall be fully responsible for observing the need for and making any changes in the arrangement of piping, connections, wiring, manor of installation etc. that may be required by the proposed equipment, both as pertains to its own work and any work affected under other parts, headings, or divisions of Drawings and Specifications.
9. Identification: Shop drawings shall be titled with the name of the project on each sheet and shall otherwise be identified by listing the particular division, section, article or reference of the work to which they pertain. Different items shall be submitted on separate sheets, and all submittals shall be numbered serially.
10. Manner: The Contractor shall furnish separate submittal sheets for each specialty item for owner's representative approval in the following manner:

    a. Five (5) copies of catalog cuts shall be submitted. The cut sheets shall be photocopied or reproduced in some other acceptable manner, noting only the items in question, together with the descriptive (specification) data.

b. Each sheet shall be identified with the division, section, article or reference in the Contract Documents that covers the item submitted for approval.
c. Each sheet shall be identified with the project name.
d. Each sheet shall bear the Contractor's stamp and signature of approval.

B. Structured Cabling System Pre-Qualification Certificate:
1. The Contractor shall submit a letter of approval from the manufacturer indicating completion of pre-qualification requirements for installation of the Panduit/Belden Integrity Structured Cabling System. Documentation shall include training certificates for installation of the proposed products.

C. Products:
1. Backbone and horizontal cabling including but not limited to the following:

a. Fiber-optic (FO) cables.
b. Unshielded twisted pair (UTP) cables.
2. Connectors, splices, and terminations used for FO and UTP cabling.
3. Wall mount and floor mounted distribution equipment racks, frames, bracing, and anchors.
4. Surface raceway, cable tray, and cable management systems.
5. Cross-connect punch-down blocks, UTP modular patch-panels, FO management panels, and components.
6. Telecommunication outlet jacks, boxes, bezels, modules, and cover-plates.
7. Provide copies of the Cable Manufacturer's test results for each reel of FO cable as follows

a. Bandwidth/Dispersion test data.
b. Index of Refraction.
c. Cable length and reel data.

D. Testing:
1. Manufacturer Tests:

a. Provide copies of the Cable Manufacturer's test results for each reel of FO cable as follows
b. Bandwidth/Dispersion test data.
c. Index of Refraction.
d. Cable length and reel data
2. Field Tests:

a. Prepare a type written or hardcopy printout of report of the results, including OTDR traces, for each cable tested and furnish three copies to the Engineer.
b. Prepare a report that cross references the linkages between the various components and equipment.

1.10 RECORD DRAWINGS

A. The Contractor shall keep one set of drawings on site to continually maintain an accurate record of the as-constructed work.

B. The marked-up drawings shall accurately indicate location of equipment, pull-boxes, conduits, cable types and labeling.

C. Within 30 days of completing work, the Contractor shall submit five (5) copies of as-built drawings to the owner's representative. In addition, the Contractor shall provide an electronic copy of the as-built drawings in a format specified by the owner's representative.

1.11 DEFINITIONS

A. Backboard: Backboard generally refers to the A-C, fire-retardant, plywood sheeting lining the walls of the telecommunications facilities. Backboards may also refer to the entire wall-mounted assembly, including wire management and termination frames.

B. Equipment Room (ER): The ER is the location within a building where the entire inside cable and fiber optic plant originates. The entire cable and fiber optic entrance facilities (EF) may also terminate here. Part of the Horizontal Distribution System may originate here as well. It may include: the physical location, enclosure, wire and copper cable management hardware, fiber and management hardware, termination hardware, distribution hardware, protection hardware, active electronic components, and equipment racks. EIA/TIA-569 "Commercial Building Standard for Telecommunications Pathways and Spaces" refers to the room housing the Campus Distributor or the Building Distributor as the Equipment Room. Throughout this specification MDF, IDF, CD, BD, intermediate cross-connect and Equipment Room are equivalent.

C. Cable Plant: Cable, splice cases, conduit raceways, vaults, junction/pull boxes, rooms, racks, equipment, patch bays/blocks, and other infrastructure required to provide physical, electrical, optical connectivity between buildings on the Site.

D. Cable Rack: Hardware designed and manufactured for horizontal pathway distribution of cable and inside wiring inside the MDF, IDF, ER, or TR rooms.

E. Cable Tray: Hardware designed and manufactured for horizontal pathway distribution of cable and inside wiring inside the MDF, IDF, ER, or TR rooms, or from the MDF/IDF to the Telecom station outlet access point.

F. Copper Entrance Cable: Copper Cable that joins the Owner's backbone infrastructure at its connecting point to the buildings ER.

G. Designation Strips: Paper or plastic strips, usually contained in a clear or color tinted plastic carrier, designated for insertion into a termination frame. Designation strips are usually imprinted with the adjacent terminal number and are used to aid in locating a specific pair, group of pairs, or telecom station outlet inserted into the termination frame, or for the purpose of delineating a termination field.

H. Entrance Conduit: Conduit that connects the Owner's underground infrastructure with the building's ER.

I. Fiber Entrance Cable: Fiber Optic cable that joins the Owner's backbone infrastructure at its connecting point to the buildings ER.

J. Inside Plant (ISP): Communications system inside a building (wire, fiber, equipment and racks, telecom station outlets, etc.).

K. Telecommunications Room (TR): The TR is the location in a building where a transition between the Backbone (riser) System and the Horizontal Distribution System occurs. It may include: the physical location, enclosure, wire and cable management hardware, fiber and management hardware, active electronic components, termination hardware, and equipment racks. EIA/TIA-569, "Commercial Building Specifications for Telecommunications Pathways and Spaces" refers to the room housing the Horizontal Cross-connect as the Telecommunications Room. Throughout this specification IDF, HC, BD and Telecommunications Room are equivalent.

L. LAN: Local Area Network

M. MPOE: Minimum Point of Entry, located within the building main electrical room.

N. Management Hardware
   1. Fiber Management: Hardware designed and manufactured for the purpose of keeping fiber patch cords neat and orderly. Most termination frame manufacturers provide fiber management components designed to work in conjunction with their termination frames. Fiber management may also refer to other types of hardware for the purpose of securing fiber optic cable to the building.
   2. Wire Management (Copper and Data): Hardware designed and manufactured for the purpose of keeping cross-connect wires and patch cables neat and orderly. Most termination frame manufacturers provide wire management components designed to work in conjunction with their termination frames. Wire management may also refer to other types of hardware for the purpose of securing wire and cable to the building.

O. Outside Plant (OSP): Communications system outside of the buildings (typically underground conduit and vaults, exterior/underground rated wire and cable, etc.).

P. Courtesy Phone / Emergency Phone Outlet: An integral assembly containing one, 4 pair category 6 telephone wall jack for wall phones or emergency phones with black jacks and cables.

Q. Riser Cable: High volume cable (copper) that connects the ER with the TR or backboards located on the same or different floors.

R. Riser Conduit: Conduit that connects the ER to the TR or backboards located on the same or different floors.

S. Riser Fiber Cable: Fiber Optic Cables that connects the ER with TR or backboards located on the same or different floors.

T. Station Wire: 4 pair, unshielded, twisted pair, category 6 wire that connects the telecom station outlet to the MDF/IDF.

U. Telecom Station Outlet: An integral assembly consisting of the following:

1. Four, 4 pair category 6 cables that can be used for various services (voice and data.); one is blue, another is orange, and the third is green, and the fourth is black with matching colored jacks and cables.

V. Telecommunications Ground: An electrical ground (as defined by local codes), usually the main building ground electrode extended by a continuous AWG "0" wire to ground bus bars in the ER, TR, and roof telecommunications terminal point.

W. Termination Fields
1. Copper and Data Termination Fields: A group of termination frames clustered together to provide terminations for specific cable or inside wiring groups, where all of the cable or wiring in the group is used for a single purpose, constitutes a copper, data, or network termination field. The extent of a specific field, located in a group of fields, may be distinguished by a physical separation between the frames forming the field, by uniquely colored designation strips, or by a series of terminal numbers.
2. Fiber Optic Termination Fields: A group of termination frames clustered together to provide terminations for fiber optic cable fibers, where all of the cable fibers are used for a single purpose, constitutes a fiber termination field.

X. Termination Frames
1. Copper Termination Frame: Device designed and manufactured for the purpose of terminating large numbers of copper cable or station wire pairs. These devices generally utilize insulation displacement connections and usually require special tools to make the terminations. Throughout this specification, the terms Copper Termination Frame and Wiring Block are equivalent.
2. Data Termination Frame: Device designed and manufactured for the purpose of terminating copper cable pairs from the active data electronic hardware. These devices generally utilize insulation displacement connections and usually require special tools to make the terminations. Throughout this specification, the terms Data Termination Frame and/or Data Patch Panel are equivalent.
3. Fiber Termination Frame: Device designed and manufactured for the purpose of terminating single-mode fiber optic cable fibers into "SC" connector fields and multimode fiber optic cable fibers into “MTRJ” connector fields.
4. Network Termination Frame: Device designed and manufactured for the purpose of terminating copper cable pairs from the active data electronic hardware. These devices generally utilize insulation displacement connections and usually require special tools to make the terminations. Throughout this specification, the terms Network Termination Frame and Network Jack Panel are equivalent.

PART 2 MATERIALS

2.1 NOT USED

PART 3 EXECUTION

3.1 NOT USED

END OF SECTION

SECTION 16751
TELECOMMUNICATIONS ACCEPTANCE TESTING

PART 1 GENERAL

1.1 SECTION INCLUDES

A. Testing Publications and Standards

B. Inspection and testing procedures for copper and fiber optic cables.

C. Documentation and As-Built Requirements

1.2 REFERENCES

A. Electronics Industry Alliance/Telecommunications Industry Association (EIA/TIA)
1. EIA/TIA 568A - Commercial Building Telecommunications Wiring Standard
2. EIA/TIA 569 - Commercial Building Standard for Telecommunications Pathways and Spaces
3. EIA/TIA TSB 36 - Technical Systems Bulletin Additional Cable Specifications for Unshielded Twisted Pair Cables
4. EIA/TIA TSB 40A - Additional Transmission Specifications for Unshielded Twisted-Pair Connecting Hardware
5. EIA/TIA TSB 67 - Transmission Performance Specifications for Field Testing of Unshielded Twisted-Pair Cabling Systems.
6. EIA/TIA TSB 72 - Centralized Optical Fiber Cabling Guidelines
7. EIA/TIA 606 - Administration Standard for the Telecommunications Infrastructure of Commercial Buildings
8. EIA/TIA 607 - Commercial Building Grounding and Bonding Requirements for Telecommunications
9. EIA - 310-D - Cabinets, Racks, Panels, and Associated Equipment
10. EIA/TIA-455-57A - Optical Fiber End Preparation and Examination
11. EIA/TIA 455-59 - Measurement of Fiber Point Defects Using An OTDR
12. EIA/TIA 455-60 - Measurement of Fiber or Cable Length Using An OTDR
13. EIA/TIA 455-61 - Measurement of Fiber or Cable Attenuation Using An OTDR
14. EIA/TIA 455-95 - Absolute Optical Power Test for Optical Fibers and Cables
15. EIA/TIA 526-14 - Optical Power Loss Measurements of Installed Multimode Fiber Cable Plant
16. ANSI/ICEA S-83-596-1994 - Fiber Optic Premises Distribution Cable Technical Requirements

B. Federal Communications Commission (FCC) part 15 and part 68

C. Rural Utilities Services (RUS), Bulletin 345-63, RUS Standards for Acceptance Tests and Measurements of Telephone Plant

PART 2 PRODUCTS

2.1 NOT USED

PART 3 EXECUTION

3.1 GENERAL PROCEDURES

A. All testing records and drawings shall be available before job turnover in electronic format as well as hard copy and are part of final acceptance requirements. For the electronic documents, the testing results shall be submitted in electronic format, and the drawings in AutoCAD format. The Contractor will provide the appropriate software package to be able to read the electronic testing results. Additionally, the Contractor must demonstrate that the testing results can be exported to MS Excel format.

B. The Contractor will provide all tools, equipment, and fully trained staff necessary to conduct fully witnessed acceptance testing of all installed telecommunications-related products and systems.

C. The Contractor shall prepare a complete test plan for all installed telecommunications systems for review and approval by the owner's representative prior to start of installation. The plan shall show, at a minimum, test configurations, calibration procedures, impedances, and measurement equipment. The scope of this work includes, but is not limited to, the following:
   1. All system(s) shall be checked for compliance with these specifications.
   2. The Contractor shall maintain a check-off list for Owner reference during tests.
   3. The result of the measurements outlined shall be recorded and submitted along with current as-built drawings (AutoCAD format) to the owner's representative as final proof of system performance. All other test results must be in electronic format and exportable to MS Excel.
   4. The Contractor shall expeditiously replace any system not meeting specifications at no cost to the Owner. Failure to act in an expeditious manner to properly remedy any abnormality resulting from installation/construction defects or workmanship; faulty material; and/or the failure of the systems, components, or the cable medium to perform in accordance with the Owner and/or Manufacturer's technical specifications shall cause the Owner to place a "hold" on any other telecommunications development or construction associated with this project. The Owner will notify the Contractor in writing of such action and is absolved and shall be held harmless from any delays, costs over-runs, scheduling difficulties, etc. assessed by others due to the Contractor's failure to meet the final proof of system performance specifications. Final as-builts will be provided, as specified, at the end of the project.
   5. All systems shall meet the bid specifications and be accepted by the owner's representative before the work will be considered complete.

D. After the Contractor has provided complete documentation of all testing and the documentation has been reviewed by the owner's representative, the Contractor shall conduct "proof of performance" testing on selected components at the direction and discretion of the owner's representative. Such testing will utilize the same equipment and procedures used to conduct and document the initial tests but will be applied on a random basis to verify the testing documentation. If in the judgment of the owner's representative, the proof-of-

performance test results vary significantly from the acceptance test results, the Contractor shall continue with testing until cleared by the owner's representative.

E. All test equipment shall be calibrated by a certified laboratory or the manufacturer within the last six months, and such certification shall be submitted to the owner's representative prior to testing.

F. All testing shall be coordinated with the owner's representative (providing a minimum of one week's notice) to ensure all acceptance and proof-of-performance testing can be witnessed by qualified personnel.

3.2 INSPECTION AND TESTING PROCEDURES FOR COPPER CABLE

A. The owner's representative will conduct routine inspections of the work in progress, and any deficiencies will be discussed at the regular progress meeting. In the event the owner's representative determines work is progressing in an incorrect manner and waiting for the regular meeting could cause further problems, the Contractor's on-site project manager will be notified.

B. Copper Station and Riser Cables: The Contractor shall conduct witnessed acceptance testing on all station and riser cable installed as part of this project as defined below:
   1. The entire UTP channel shall be installed, terminated, and tested to meet or exceed CAT-6 standards.
   2. The correct and continuous bonding of cable shields through all riser and tie cable splices will be verified. This test shall be conducted from the ER prior to strapping shield grounds at splice or termination points.
   3. Each station cable and all riser cable pairs will be tested for crosses, opens, grounds, reversed and/or transposed pairs, shorts, foreign battery, continuity, and resistance (in ohms). All riser cable pairs shall be tested for loss in dB. All problems will be resolved and the cable re-tested to ensure compliance.
   4. All riser cable test results shall be provided in electronic format; and the riser numbering scheme shall be in accordance with the convention provided by the Owner. This convention should also match the numbering scheme in the "as-builts" drawings.
   5. Using a Category 6 rated pair scanner or similar device, all copper station cables will be tested to verify the installation meets the EIA/TIA 568-A Category 6 performance specifications as defined in TSB-95. All test results shall be provided in electronic format; and the outlet numbering scheme shall be in accordance with the convention provided by the Owner. This convention should also match the numbering scheme in the "as-builts" drawings. All stations shall meet or exceed this performance standard.
   6. All pair scanners used on the project shall be calibrated to a single common test cable at the start of each shift and after changing batteries. The electronic copy of the calibration results shall be included as a reference with each batch of station test results submitted.
   7. Performance:

C. Characteristic impedance: 100 ohms ±15% from 1 MHz to 100 MHz, ±22% from 100 MHz to 200 MHz, ±25% from 200 MHz to 250 MHz, ±32% from 250 MHz to 350 MHz.

D. Minimum ACR: 26dB at 100 MHz and 7dB at 250 MHz.

E. Attenuation is given as the maximum allowable attenuation in dB per 100m for the worst pair in the cable.

F. NEXT (near end cross talk) is given as the minimum allowable NEXT loss in dB for the worst pair in the cable.

G. Copper Inter-building and Entrance Cables: The Contractor's witnessed acceptance testing on all inter-building and entrance cables installed as part of this project is defined below:
   1. The correct and continuous bonding of cable shields through all riser and tie cable splices shall be verified. This test shall be conducted from the ER and TR prior to strapping shield grounds at splice or termination points.
   2. Each cable pair shall be tested for crosses, opens, grounds, reversed and/or transposed pairs, shorts, foreign battery, continuity, resistance (in ohms) and loss in dB.
   3. All irregularities will be resolved and the cable re-tested to ensure compliance.

3.3 INSPECTION AND TESTING PROCEDURES FIBER CABLE

A. Fiber Optic Riser and Station Cable
   1. Fiber Optic (FO) cable: Conduct performance testing of fiber optic cable in accordance with EIA/TIA standardized procedures. Use Optical Time Domain Reflectometer (OTDR) and Optical Loss Test Sets (OLTS) that have been calibrated against National Institute of Standards & Technology (NIST) standards during the previous twelve months. Operate and adjust the test equipment in accordance with the manufacturer's directions. The test set operating instructions, as published by the manufacturer, shall be made available for inspection by Owner at the time of the test.
   2. Testing for Fiber Optic (FO) cable shall be in accordance with ANSI/TIA/EIA-526-7 and ANSI/TIA/EIA-526-14 and TSB-72
   3. Fiber Optic cable shall meet the performance criteria as stipulated in the table below and as amended by the latest applicable Standards. Replace, re-splice, or re-terminate cables that do not meet the specified performance criteria. Retest and document the replacement cables.
   4. Tests on FO cables shall be conducted on individual fibers from origination point to termination point; Duplex "Loop-back" testing is not acceptable.

Optical Fiber Transmission Performance Table

WAVELENGTH λ (NM)	ATTENUATION (DB/KM)	BANDWIDTH (MHZ-KM)
850	2.8	3500
1300	1.0	500

   5. All fiber riser cable shall be tested from the building's ER to each fiber TR terminal. The results of OTDR testing to define the length of each riser cable shall be documented.
   6. The Contractor shall conduct a power meter (loss) test of each fiber optic riser cable at both wavelengths A to B, B to A, and OSPL (OSPL is defined as La + Lb). No individual riser fiber link segment (including connectors) shall measure more than 2.0 dB loss. Tests shall be conducted using ANSI/EIA/TIA-526-14A, Method B.
   7. The Contractor shall provide a list in electronic format reflecting cable ID and actual measured loss. All test results shall be provided in electronic format; and the cable

numbering scheme shall be in accordance with the convention provided by the Owner. This convention should also match the numbering scheme in the "as-builts" drawings.

B. Fiber Optic Inter-building and Entrance Cable
   1. The appropriate high resolution OTDR device to test the fiber inter-building and entrance cables shall be used. Tracing printouts (noting the appropriate optical fiber and buffer tube color designation) shall be mounted on separate pages and bound into a three-ring notebook. An incremental scale that reflects the short lengths of cable involved in these tests shall be utilized.
   2. All fiber riser cable shall be tested from the ER to each building's ER terminal. The results of OTDR testing to define the length of each riser cable shall be documented.
   3. The Contractor shall conduct a power meter (loss) test of each fiber optic riser cable at both wavelengths A to B, B to A, and OSPL (OSPL is defined as La + Lb). No individual fiber link segment (including connectors) shall measure more than 2.0 dB. The tests shall be conducted using ANSI/EIA/TIA-526-14A, Method B. A list in electronic format reflecting cable ID and actual measured loss shall be submitted to the owner's representative. All test results shall be provided in electronic format; and the cable numbering scheme shall be in accordance with the convention provided by the Owner. This convention should also match the numbering scheme in the "as-builts" drawings

3.4 DOCUMENTATION

A. Fiber Cable Systems
   1. All documentation shall be neatly and legibly done and shall provide a clear understanding of the installed system. All documentation and test results shall be in electronic format.
   2. The Contractor shall prepare "as-built" plans of all work including inter-building, entrance, and riser cable locations with footage. All approved changes and actual in-place footage shall be marked, in red, on a "D" size drawing. The as-builts shall include all fiber optic cable placed with cable lengths, fiber assignments, and cable numbers and counts.
   3. The as-builts shall show the telecom station outlet identifier in full.
   4. The Contractor shall provide signed originals of all acceptance testing documents, which are:
   5. Fiber optic insertion loss results (using forms provided by the Owner)
   6. OTDR graphs and printouts and test results (in a 3-ring binder)
   7. Current test equipment certifications

B. Copper Cable Systems
   1. The Contractor shall use forms provided by the Owner or by the Structured Cabling System manufacturer, if approved by the owner's representative, to document the successful testing of all inter-building, entrance, riser and tie cables.
   2. Category 6 station cable test results noting unique station number and group test results by floor shall be provided.
   3. The Contractor shall neatly note floor plans with "as-built" station number in full and any changes, additions, or deletions to outlet placement.
   4. Inter-building, entrance, and riser plans shall be updated to include actual routes, cable numbers and counts, and lengths of cables.

END OF SECTION

SECTION 16752
TELECOMMUNICATIONS MATERIAL & METHODS

PART 1 GENERAL

1.1 SECTION INCLUDES

A. Conduit

B. Hangers and Cable Ties

C. Raceways

D. Ladder Racking

E. Innerduct

F. Flex Tray

G. Cable Tags and Labels

H. Communications Backboards

I. Station Outlets

J. Faceplates

K. Copper Cable Termination System

L. Equipment Racks

M. Pull Boxes and Cabinets

N. Wire Managers

O. Voice/Data Network Station Patch Panels

1.2 REFERENCES

A. As defined in Section 16710 - Telecommunications General Requirements.

1.3 SUBMITTALS

A. The Owner shall receive the following Contractor materials prior to the start of work:
   1. Product data for:

      a. Innerduct
      b. Cable trays
      c. Racks and wire managers
      d. Copper terminals and hardware

e. Cable and splice case identification tags
f. Station hardware (outlets and jacks)

PART 2 MATERIALS

A. Where applicable, the Contractor shall install materials and equipment as part of a Panduit/Belden Integrity Structured Cabling System or Approved Equal.

2.2 CONDUIT

A. All telecommunication cabling shall be installed in raceways. Provide conduit, wireway, cable-trays, junction boxes, and outlet boxes as indicated on the Drawings. Where sizes are not indicated on the Drawings provide raceways sized in accordance with EIA/TIA and BICSI standards. Materials shall be in accordance with Section 16128 in addition to specific requirements of the Standards.

B. Provide pull-lines in both empty and partially occupied data and telecomm raceways. Partially occupied raceways are considered to be those that are filled to less than 40 percent of the cross sectional area of the raceway. Pull-line sizes and types are as follows:
1. Conduits 1¼″ and smaller: 3/16″ polyester pre-measured printed tape, Greenlee Textron #434 or Approved Equal.
2. Conduits 1½″ and larger: 1/4″ Kevlar pre-measured printed tape, Greenlee Textron #39243 or Approved Equal.
3. Floor Ducts: 1/4″ Kevlar pre-measured printed tape, Greenlee Textron #39243 or Approved Equal.
4. Cable trays longer than ten feet in length: Rig continuous traveling pull-lines of 1/4″ polypropylene between access points so as to allow multiple sequential cable installations in the future.

C. Provide rough-in outlet boxes for data and telecomm outlets in size 4-11/16″ square by 2-1/8″ deep with single gang plaster rings. Select special knockout provisions to match the conduit entries indicated on the Drawings.

D. All communication conduits two inches in diameter and larger shall be equipped with a terminating bushing or collar to protect cables during placement.

E. Bushings shall be non-metallic for 1 inch and smaller and insulated metallic for conduits larger than 1 inch.

F. All station conduit shall be no smaller than one and one-quarter inch (1¼″) in diameter unless otherwise noted.

2.3 HANGERS AND CABLE TIES

A. Materials: All hangers and cable ties shall be designed to support communications cable (including the fiber) without kinking or damage.
1. Hangers shall be metal construction and shall provide a wire loop or elbow designed to support multiple communications cables.

2. No more than twelve (12) station cables may be supported by a single hanger without using a saddle (3 inches wide at a minimum) to support the weight of the additional cables.
3. Velcro cable ties used within a rated ceiling plenum space shall be rated low smoke and shall be certified for use in a plenum environment.

B. Manufacturers: Panduit, CPI Chatsworth, B-Line, Caddy, or Approved Equal.

2.4 SURFACE RACEWAYS

A. Materials
1. The Contractor shall provide and install surface mounted raceway in order to serve locations on structures that cannot be fished. Every effort must be made to conceal station cable within the existing wall structures. Surface mounted raceways are not to be used to "simplify" the installation.
2. The raceway opening shall be a minimum of 1 ¼" wide by ¾" if limited to serving only a single station. If more than one station is being served, or if a video cable is to be installed along with copper cables, the minimum size raceway is 1 ¾" wide by 1".
3. The raceway shall be equipped with all accessories such as elbows, tees, junction boxes, and covers necessary to provide a complete and high quality installation.
4. The raceway material shall meet or exceed UL-5A standards and shall be equipped with a single piece cover or a snap-in-place cover designed to fasten securely.
5. The raceway must be attached to the walls with mechanical fasteners every six feet in addition to any mastic provided as part of the product.
6. Surface raceway shall be Wiremold 5400 series or Approved Equal. The raceway shall be a 3 piece design with a base, and two snap-on covers, which provide access to each channel independently. The raceway shall maintain complete separation of the power and data channels. A full complement of fittings shall be available including, but not limited to flat, internal, and external elbows, tees, entrance fittings, cover couplers, base couplers, and end caps.

2.5 LADDER RACKING

A. Materials
1. Cable support ladder racks shall be installed as defined in the Contract Documents and in any location where additional pathways are required to support large numbers of station cables that are otherwise not supported.
2. The racks shall be twelve inches wide unless otherwise noted.
3. In some locations the ladder rack shall be equipped with a four-to-six inch fence on both sides to support bundles of patch or jumper cables. This fence shall mechanically attach to the side or bottom of the ladder, not the surface over which the cable will be placed.
4. The racks shall be classified by Underwriters Laboratories (UL) as suitable for equipment grounding.
5. The racks shall be earthquake braced; the zone shall be zone 4.
6. The Contractor shall provide manufacturer's standard clamps, hangers, brackets, splice plates, reducer plates, blind ends, barrier strips, connectors, and grounding straps.

B. Manufacturer: B-Line or Approved Equal.

2.6 INNERDUCT – PLENUM AND RISER

A. Materials
1. Indoor innerduct for both plenum and riser applications shall be non-metallic corrugated flexible conduit.
2. Innerduct shall be 1″dia. in size with pre-installed pull tape.
3. Innerduct shall meet the requirements of Underwriters Laboratory (UL) Specifications 2024 of UL 910.
4. All innerduct for risers shall be orange in color, and all station fiber cable shall be white in color.
5. All innerduct shall be installed with one cable per innerduct. There shall be no mixing of different cables in the same innerduct.

B. Manufacturer: Carlon (Part # CF4X1C-2500), or Approved Equal.

2.7 FLEX TRAY

A. Materials
1. The cable trays shall be welded, steel wire mesh with an electroplated zinc galvanized finish.
2. The trays shall be twelve inches (12″) wide by a minimum of 2″ deep unless otherwise noted.
3. The trays shall be equipped with elbows, tees, and other accessories as required to complete the installation following manufacturer's guidelines.
4. The trays shall be supported no less than every six feet. Support attachments shall be made only to the building structure.
5. Each end of the tray shall be equipped with a finished lip and drop off to reduce damage to cables.
6. Where possible long radius bends shall be used.
7. The cable tray shall be NEMA Class Designation 12B (75 lbs. per linear foot). Trays shall qualify under CEC section 318-7 (b) as equipment grounding conductor.

B. Manufacturer: GS Flextray or Approved Equal.

2.8 CABLE TAGS AND LABELS

A. Cables shall include a label at each end of the horizontal and backbone subsystem cables. It is required that labels also be affixed at regular intervals along the entire length of the cable or at intermediate locations such as conduit ends, backbone splice points, manholes, and pull boxes. It may be desirable that both end termination positions be marked on its labels. The labels for cables shall be self-laminating to protect the legend from moisture, oils, and dust.

B. The labels shall be printed (not marked by hand) and shall utilize color-coded identifiers or labels for easy identification and administration. Contractor shall obtain concurrence of labeling format with Owner prior to cable installation.

C. Manufacturer: Panduit or Approved Equal.

2.9 COMMUNICATIONS BACKBOARDS

A. The Contractor shall provide 3/4" A/C void-free plywood as noted on drawings. The backboard shall a minimum of 4′ by 8′ unless otherwise noted. Plywood shall be extended from 2" A.F.F. to 8'-2" A.F.F. and wall-to-wall unless noted otherwise by the owner's representative.

B. Plywood shall be fire retardant or treated with fire-retardant sealant or covered with a fire-retardant paint. All backboards must be finish sanded, sealed with a primer, and finished with two coats of paint.

2.10 UNSHIELDED TWISTED PAIR (UTP) CABLE

A. See section 16753

2.11 FIBER OPTIC (FO) CABLE

A. See section 16753

2.12 STATION OUTLETS

A. Metal Outlet Boxes
1. Metal outlet boxes shall be installed as receptacles for the information outlets in the following locations: new interior wall construction, exterior locations, locations with special vapor proof or explosion proof applications, and floor mounted outlets. Outlet boxes shall be galvanized steel. Boxes installed in any exterior location where exposed to rain or moisture laden atmosphere shall be cast screw hub type with gaskets and weatherproof covers. Boxes for vapor proof or explosion proof applications shall be designed specifically for such use.
2. In new wall construction, each box shall be large enough to accommodate the required number and sizes of conduits, wires, splices, and devices but shall not be smaller than a 4 11/16" square box. No extension boxes will be accepted.
3. Each box shall be flush mounted and equipped with a 1 1/4" conduit stubbed into the ceiling area.
4. In walls that are not fishable and exterior locations, the outlet box will be surface mounted. All floor boxes shall be recessed.
5. All boxes shall be equipped with single (one) gang ring in locations with one voice or data cable.
6. All boxes shall be equipped with a dual (two) gang ring in locations with a total of two to eight copper or fiber station cables.
7. Manufacturers: Appleton, Raco, or Steel City.

B. Telecom station outlets
1. All terminated category 6 must meet or exceed Category 6 transmission requirements for connecting hardware, as specified in ANSI/TIA/EIA 568A Commercial Building Telecommunications Cabling Standard, Horizontal Cable Section.
2. The standard telecom station outlet shall consist of four (4) Category 6 four-pair cables, each terminated on a separate Category 6 rated 8-position jack following EIA/TIA 568A wiring standards.

3. All pairs will be terminated on jacks, one blue jack terminated on blue CAT 6 cable for data (upper left hand position), one orange jack terminated on orange CAT 6 cable for data (upper right hand position), one green jack terminated on green CAT 6 cable (lower left hand position) and one black jack terminated on black CAT 6 cable (lower right hand position) .
4. The modular jacks must be rated for Category 6 performance in the configuration installed.
5. The standard telecom station outlet shall be placed 18" above the finished floor.
6. The faceplate will be clearly labeled in two places on the face of the faceplate and on the surface of the angled jack with outlet number, and each jack will be labeled with jack number. All labels will be typed or preprinted and shall be securely affixed to the faceplate.
7. Dust covers shall be placed in the vacant slots.
8. Manufacturer: Panduit or Approved Equal.

C. Voice Only Outlets
1. Voice only outlets shall consist of a single four-pair category 6 green cable connected to a 630B wire modular green jack assembly with a metal cover plate suitable for securing a wall mounted telephone.
2. All wall phone outlets shall be placed at 44 inches above the finished floor unless otherwise noted to make the maximum height to the top of the telephone 48 inches above the finished floor.
3. Wall phone outlets shall be equipped with a duplex mud-ring around the standard dual gang outlet box recessed in the wall where possible.
4. Locations where the voice only outlet can not be recessed into the wall must be approved, by the Owner representative, to be surface mounted.
5. Wall phone outlets shall consist of a stainless steel duplex faceplate equipped with a single 630B.
6. Manufacturer: Panduit 630B stainless steel jack or Approved Equal.

D. Floor-Mount Voice/Data Outlets
1. The voice/data floor-mount outlet shall consist of four (4) Category 6 four-pair cables, each terminated on a separate 8-position jack following EIA/TIA 568A wiring standards. One outlet will be electrical blue, one electrical orange, one electrical green, and one electrical black.
2. The floor mount outlet may be a joint power/signal outlet as defined in the electrical section of the specifications.
3. The communications portion of the outlet shall be equipped with a NEMA standard duplex faceplate cutout and four RJ45 jacks.

E. Floor-Mount Furniture Feeds
1. The voice/data furniture outlet shall consist of four (4) Category 6 four-pair cables, each terminated on a separate 8-position jack following EIA/TIA 568A wiring standards. The outlet colors shall be blue, orange, green, and black.
2. The furniture shall be served from the ceiling (using a pole) or through a joint power/signal poke-through floor outlet as defined in the electrical section. The Contractor shall provide and install all fittings and flex conduit necessary to form an unbroken link from the floor monument into the communications raceway of the modular furniture.

3. Category 6 station cable shall be placed from the MDF/IDF, through the riser sleeves, through the cable tray system into the conduit, poles, etc. into the furniture to be served. The MDF/IDF closet terminations for these stations shall be in the same quadrant of the building as the modular furniture it serves if at all possible.
4. No more than three stations (12 cables) shall be served through a single poke-through fitting.
5. The outlets shall be Panduit or Approved Equal, with Category 6 jacks.

F. Non-Metallic Outlet Boxes
1. Non-metallic outlet boxes shall be used for interior surface mounted locations. Boxes shall be from same manufacturer as the non-metallic raceways used for installation of station wire.
2. The type of box must be from the same manufacturer and compatible with the wiremold raceway. Single (one) gang box shall be used in locations with one voice or data cable. Dual (two) gang box shall be used in locations with a total of two to eight copper and fiber station cables.
3. Manufacturer: Panduit, or Approved Equal.

G. Mounting Brackets
1. Mounting brackets shall be utilized to attach faceplates on existing fishable walls.
2. Part Numbers: MPLS (for single gang faceplates); MPLS2 for dual gang faceplates.
3. Manufacturer: Caddy or Approved Equal. (Manufacturer must be acceptable with Panduit/Belden Integrity Structured Cabling System.)

2.13 FACEPLATES

A. Faceplates will be supplied for every telecom station outlet (voice and data) unless otherwise noted. They shall meet the required NEMA standard.

B. All faceplates shall be available in single, duplex, triple, quad-plex or six-plex arrangement in a single gang configuration.

C. Faceplates shall be available in eight-plex arrangement in a dual gang configuration.

D. Surface mount boxes shall be available in single, dual, quad, six plex, and twelve plex configurations.

2.14 COPPER CABLE TERMINATION SYSTEM

A. Materials
1. All voice copper cable terminations from protectors or riser system shall be made on Panduit Data Patch 110 style category 6 Patch Panels (24 or 48 ports only) for 19 inch rack mounting or Approved Equal.
2. Terminate only one pair per port. Spare back the 25th pair in each 25-pair binder group. Skip this 25th pair and do not terminate it in the patch panel side.
3. All single line voice-only copper cable terminations shall be green in color and place in upper portion of rack.

B. Manufacturer: Panduit or Approved Equal.

2.15 MDF AND IDF EQUIPMENT RACKS

A. MDF and IDF Racks (Freestanding floor mounted): Standard EIA 19", 72" high, 3" x 1.265" x ¼" EIA channel, extruded aluminum rack, with base angles and top angles. Chatsworth, ADC, Panduit, or Approved Equal. For each two sections of rack, provide an adjustable steel channel mounting brace or lateral ladder rack section for anchorage to the wall or ceiling.. Provide an adjustable steel channel mounting brace or lateral ladder rack section for anchorage to the wall or ceiling.

1. For each rack provide full vertical cable management on each end and between rack sections. Chatsworth MCS, 4.4" wide, double-sided, with hinged covers, or Approved Equal.
2. For each rack provide one (1) horizontal cable manager for each 12 RMU spaces or fraction thereof. Chatsworth "Universal Horizontal Cable Manager", or Approved Equal.
3. For each rack provide two (2) 48-inch high, 16 outlet strip with 15-ft. cord, with rack mounting hardware Tripp Lite # PS4816, or Approved Equal.
4. For each rack provide the manufacturer recommended seismic mounting kit for use on a concrete slab floor

B. Manufacturers: Chatsworth or Approved Equal.

2.16 PULL BOXES AND CABINETS

A. Materials:

1. All pull boxes and cabinets shall be code gauge galvanized steel.
2. No extension boxes will be accepted.
3. Surface-Mounted Entrance Cabinets: Cabinets mounted on an outside wall of a building shall be equipped with a ¾ inch plywood backboard, gaskets or equipment required to maintain a weatherproof enclosure, and a door latch that can be locked.

2.17 VOICE/DATA NETWORK STATION PATCH PANELS

A. Materials

1. All voice/data station cables shall terminate on mini-com modular patch panels for 19 inch rack mounting, utilizing Pan Jack category 6 modular jacks.
2. Pan Jacks to follow T568-A wiring scheme.
3. Pan Jacks to be placed in the following sequence, Port 1 Blue, Port 2 Orange, Port 3 Green, Port 4 Black. This blue, orange, green, Black sequence will continue utilizing all 24 ports.
4. All single-line voice station cable for payphones, emergency phones, courtesy phones, etc. shall be placed at the bottom of the rack but above the electronics, and both jacks and cables should be colored Green.

B. Manufacturer: Panduit or Approved Equal.

PART 3 EXECUTION

3.1 GENERAL INSTALLATION

A. All installation work shall be performed according to published industry guidelines, rules, and regulations. All Structured Cabling System products shall be installed according to manufacturer procedures.

B. All pathways shall avoid electromagnetic interference (EMI). Cable that is distributed in partially-enclosed metallic pathways shall be routed with the following minimum clearances:

C. Four (4) feet from motors or transformers.

D. One (1) foot from conduit and cables used for electrical power and distribution.

E. (24) inches from fluorescent lighting.

F. Pathways shall cross perpendicular to fluorescent lighting and electrical power cables and conduit.

3.2 CONDUIT

A. All conduit shall be routed parallel and perpendicular to walls.

B. All conduit shall be installed in accordance with NEMA "Standard of Installation" and shall meet applicable local and national building and electrical codes or regulations.

C. Conduit runs shall not exceed 100 feet or contain more than two 90 degree bends without utilizing appropriately sized pull boxes.

D. In rooms with a drop or false ceiling, communications outlets shall be served by a one and one-fourth (1¼) inch conduit stubbed six inches above the false ceiling, angled toward the cable tray or open access area, and shall be equipped with a compression fitting and plastic bushing. All stubs shall be marked "Comm."

E. All conduit shall be equipped with an approved water or barrier seal in building access points.

F. All conduits entering a building from outside shall be plugged with reusable stoppers to eliminate the entrance of water of gases into the entrance room.

G. All conduits leaving the entrance room for other portions of the building will be fire-stopped after the installation of cable.

3.3 HANGERS AND CABLE TIES

A. In suspended ceiling and raised floor areas where walker duct, cable trays, or conduit are not available, station wiring shall be bundled with plastic cable ties at appropriate distances.

B. Tie wraps shall not be used. Instead use velcro strips.

C. Hangers supporting the cable bundling shall be attached to the existing building structure and framework.

D. Hangers must be installed to provide at least 3 inches of clear vertical space between the cable bundling and the ceiling tiles.

E. Hangers shall be spaced to prevent cables from sagging or buckling.

3.4 RACEWAYS

A. All surface-mount raceways must be mechanically secured to the structure a minimum of every four feet.

B. Raceways must be routed at right angles to nearby structures or wall corners, and shall be neatly installed and trimmed to fit into and around other existing moldings or pathways such as the ceiling area.

C. Raceways shall be placed vertically only in corners of rooms and horizontal raceway placed at baseboard height to extend the cable run to the actual outlet location.

D. Raceways shall be routed to avoid interferences, using standard sections and a minimum number of field-cut sections.

E. Raceways shall be routed to avoid interference with removal and installation of lighting fixtures and devices of other systems that require servicing or operation.

F. Sharp burrs or edges shall be removed from raceways.

G. Completed raceways shall have no cracks or openings at coupled sections.

H. Raceway supports:
   1. Overhead Supports: Raceway shall be supported from concrete ceiling or ceiling beams, at five (5) feet maximum span intervals, using 3/8 inch threaded rods with c-hangers.
   2. Raised Floor Installation: Raceway shall be provided to accommodate underfloor pedestals at four (4) foot maximum span intervals.
   3. Overhead c-hanger and underfloor support details shall be designed to provide complete cable lay-in capability.

I. Strict adherence to the National Electric Code is required for any raceway penetrations of fire-rated walls or penetrations.

J. Radius fittings shall be provided for turns and offsets to accommodate obstructions or elevation changes and maintain minimum cable bending radii.

3.5 LADDER RACKING

A. Ladder racking shall be placed so that fully loaded racking shall not obstruct or impede the operation of lighting, air handling systems, and fire extinguishing systems.

B. At a minimum, ladder racking must be installed 7′ AFF across the length of the backboards in all locations unless otherwise noted. In addition, a cross section of ladder racking shall be installed linking the backboard ladder rack to the equipment frame rack.

C. Additional ladder racking may be installed from the backboard to the point at which the cable tray or sleeves enter the room.

D. All ladder racking shall be securely anchored to walls, ceilings, or other approved support structures.

3.6 CABLE TRAY

A. Cable trays shall be installed in accordance with NEMA VE 1

B. The Contractor will be responsible for placement of the cable tray in concert with other trades, allowing sufficient room for the cable installers to gain access to all portions of the tray system. Cable tray location shall be coordinated with open ceiling areas, access panel locations, and feeder conduit positions to provide an accessible cable pathway throughout the facility.

C. All metallic trays must be grounded and may be used as a ground conductor. [Provide 2 AWG bare copper equipment grounding conductor through entire length of tray; bond to each component. Trays used as an equipment grounding conductor must be clearly marked.

D. Trays shall be bonded end-to-end.

E. Trays shall enter distribution rooms six inches into the room, then utilize a drop out to protect station cables from potential damage from the end of the tray.

F. Cable trays shall be placed a minimum of six (6) inches from any overhead light fixture and twelve (12) inches from any electrical ballast. A minimum of eight (8) inches of clearance above the tray shall be maintained at all times. All bends and T-joints in the tray shall be fully accessible from above (within 1 foot). Trays shall be mounted no higher than twelve (12) feet above the finished floor and shall not extend more than eight (8) feet over a fixed ceiling area.

G. A separate conduit sleeve (minimum of two inches) must be provided as a pathway through any wall or over any obstruction (such as a rated hallway) from the cable tray into any room having a communications outlet.

H. The Contractor shall fire stop around the tray and, after installation of the cables, within the tray using removable pillow-style products following manufacturers′ guidelines. Sound deadening material shall be provided and installed after installation of cable.

I. In rooms without a drop ceiling (open to the structure), the cable shall be mounted as high as possible to provide the greatest clearance above the finished floor, but within the limits in 3.8.B above.

3.7 CABLE TAGS AND LABELING

A. The Contractor shall legibly label all telecom station outlets, cable, blocks, frames, and patch panels per owner's representative directions and as defined herein. Outlet faceplates shall be labeled on both sides.

B. The Contractor shall employ a cable labeling and tagging scheme that both meets SSU-NTS Standards and ANSI-606 specifications.

C. Construction labels shall be installed on all cables as they are pulled. These labels shall contain the same information as the finished labels. Typed labels on self-sealing tape shall be used. Each cable shall have a unique number that shall be related to the appropriate faceplate number and jack letter.

D. A label shall be installed on each conduit attached to a communications wall box and shall be affixed to the end of the conduit near the cable tray. The label shall have a unique number related to the appropriate faceplate number and jack letter.

E. Labels shall be installed on all station cables within two (2) inches of the end of the outer jacket material within the back box and at the blocks/patch panel. Typed labels on self-sealing tape, with a plastic overlay, shall be used. Each cable shall have a unique number that shall be related to the appropriate faceplate number and jack letter.

F. Labels shall be installed on all patch panels, blocks, and both the inside and outside of all faceplates. A uniquely numbered label for each faceplate and a unique letter for each jack shall be supplied and installed. The labels shall be machine printed (not embossed) on vinyl tape using a Brothers label maker or equivalent. The labels shall have protective overlays.

G. Labels shall be numbered according to a scheme developed in consultation with the owner's representative.

H. Ground Bars
   1. The master ground bar shall be labeled as such.
   2. Each subsidiary ground bar shall be labeled as such and have a unique identifier.
   3. All ground bars shall have a warning label that states, "If this connector or cable is loose or shall be removed, please call the Telecommunications Manager." All ground bars will be connected to the building ground with continuous "0" AWG wire.
   4. Each ground cable shall be labeled with a unique identifier.

3.8 COMMUNICATIONS BACKBOARDS

A. Communication backboards shall be configured and installed as defined on the drawings.

B. Backboards shall be mounted vertically, starting 2" above the finished floor.

C. Fasten backboards securely to the structural wall framing. Provide blocking between wall studs or metal framing prior to application of wall finishes where substantial support cannot be obtained for the wall framing alone. Install the board with the finished side out and secure with #12 x 3" all-purpose screws spaced at not more than two feet apart.

D. Anchor freestanding equipment racks to the building floor with 3/8″ x 3″ lag screws or concrete expansion wedge anchors fastened through the base plate. Provide a minimum of four (4) anchors per rack. In addition racks over 47″ high shall be tied back to the building structure at the top using cable tray for additional seismic support.

E. All plywood panels must be mounted in contact with one another, leaving no gaps between sheets.

F. All backboards shall be fire retardant or treated with fire-retardant sealant or covered with a fire-retardant paint.

3.9 STATION OUTLETS

A. Station outlets shall be mounted securely at work area locations.

B. Station outlets shall be located so that the cable required to reach the desktop equipment is no more than 16 feet long.

C. Station outlets should not be "daisy-chained."

D. Outlets shall be mounted as follows
1. Wall phone: 48 inches above the finished floor.
2. Standard voice/data outlet: 15 inches above the finished floor.
3. Wall-mounted video outlet: 78 inches above the finished floor.
4. Counter top: 6 inches above the counter top.

E. Modular Furniture Telecommunications Outlets
1. The Contractor shall provide and install all components and labor necessary to completely install, test, and document voice and data telecommunications outlets at each modular furniture workstation location.
2. Category 6 station cable shall be placed from the MDF/IDF, through the riser sleeves, through the cable tray system into the conduit, ceiling or floor poles, etc. into the furniture to be served.
3. The Contractor shall coordinate the telecommunications and electrical installation so that the modular furniture is served from the joint signal/power floor monuments or joint power pole in a consistent manner. The Contractor shall provide and install all fittings, flex conduit, adapter plates, and telecommunications cable and components necessary to install Category 6 station cable from the consolidation point box, through the ceiling or floor monument or pole, into the furniture raceway, and to the final user outlet location (including jacks, adapters, and faceplates).
4. The telecommunications installers shall coordinate with the electrical drawings for the number and location of user voice and data outlets.
5. Labels shall be numbered according to the owner's representative requirements that shall be provided prior to start of work.

3.10 FACEPLATES

A. The faceplates shall have their jack positions labeled. The primary data line (blue) is the number one data, the secondary data line (orange) is the number two data line, and the third data line (green) is the number three data line.

3.11 COPPER CABLE TERMINATION BLOCKS

A. All 110 Patch-Panel blocks shall be clearly and neatly labeled with outlet (jack) or pair assignments.

B. All outlets shall be numbered sequentially in the closet using a numbering assignment provided by the owner's representative.

C. All riser, tie, and data terminals shall be numbered using pre-printed identification strips. Numbering methodology shall be determined by the owner's representative.

D. All terminal locations shall be approved prior to installation.

E. All work on terminals shall be accomplished using tools and support hardware designed for the 110 Patch Panel system or S66M1-50 66 blocks (where Indicated) and following procedures identified by the manufacturer.

3.12 EQUIPMENT RACKS

A. Wherever possible, allow a 3' wide aisle way in the front and in the rear of each equipment rack

3.13 CABLING TERMINATIONS

A. Perform terminations and splices of backbone and horizontal cabling at each the IDF and station outlets. Splices and terminations shall be performed only by competent technicians proficient in latest standardized procedures

B. Category 6 UTP cabling terminations shall be performed using the insulation displacement contact (IDC) method. Take special care to observe jacket cut-back and pair twist requirements to preserve the performance of data cabling.

C. Provide a minimum of 3' slack for UTP cable at each MDF/IDF, 10' slack at ceiling panels, and 1' slack at data outlets to allow for adds/moves/changes.

D. Fiber Optic splices shall be performed by means of the thermal fusion splicing method. Maximum allowable average splice loss shall be 0.05 dB. Maximum allowable absolute splice loss shall be 0.15 dB. Maximum allowable reflectance shall be –65dB.

E. Fiber Optic terminations shall be performed by means of the UV-cure, Epoxy and Polish, or other comparable methods. Maximum allowable average insertion loss shall be 0.15 dB. Maximum allowable absolute splice loss shall be 0.30 dB. Maximum allowable reflection shall be –55 dB.

F. Provide a service loop for FO cable at each MDF/IDF consisting of a minimum of 15' of cable at or above the ceiling in the vicinity of the termination rack. In addition, at the FO termination tray, provide a minimum of 36" extra strip length for the buffer tube & fan-out assembly to allow each termination to be removed from the tray for inspection and assembly without disturbing adjacent terminations.

3.14 PULL BOXES AND CABINETS

A. Pull boxes shall be installed in easily accessible locations.

B. Pull boxes installed as part of a horizontal cabling pathway shall be installed immediately above suspended ceilings, where possible.

C. Pull boxes shall not be used for splicing cable.

D. Pull boxes shall be placed in conduit runs that exceed 100 feet or which require more than two 90 degree bends. The pull boxes shall be located in straight sections of conduit and must not be used for a right angle bend. Installation shall allow cable to pass through from one conduit to another in a direct line.

E. Pull boxes must have a length at least 12 times the diameter of the largest conduit.

END OF SECTION

SECTION 16753
TELECOMMUNICATIONS CABLE

PART 1 GENERAL

1.1 SECTION INCLUDES

A. Copper Backbone and Station Cable

1.2 SUBMITTALS

A. The Contractor shall submit the following materials to the owner's representative prior to the placement of cable:
   1. Product data, including manufacturer's catalog information showing dimensions, colors, configurations, construction and performance specifications for each type of cable to be supplied. In addition, the Contractor shall provide product data and installation instructions for all firestopping materials.
   2. Pre-Qualification Certificate. The Contractor shall submit a letter of approval from the manufacturer indicating completion of pre-qualification requirements for installation of the selected Panduit/Belden Integrity Structured Cabling System or Approved Equal. Documentation shall include training certificates for installation of the proposed products.
   3. Copies of signed optical cable reel tests.

PART 2 MATERIALS

2.1 PRODUCTS

A. The products listed in this section represent the standards for materials, workmanship, and performance for this project. All telecommunications cable manufacturers must be compatible with the Panduit/Belden Integrity Structured Cabling System or Approved Equal. Cables must be warranted per the requirements in the Structured Cabling System. This statement applies to all cable manufacturers listed in this specifications section.

2.2 COPPER BACKBONE CABLE

A. Material
   1. Application: Use for placement in vertical risers in buildings and in general horizontal applications within buildings.
   2. Compliance: Bellcore Specification TS-TSY-000111, UL Listed Type MPR/CMR or Approved Equal
   3. Core Construction

      a. Conductors: Solid-copper conductors, 24 AWG.
      b. Insulation: Dual insulation consisting of an inner layer of foamed polyolefin surrounded by a solid PVC skin, color-coded in accordance with telephone industry standards.

c. Twisted Pairs: Insulated conductors twisted into pairs with varying lay lengths to minimize crosstalk.
d. Core Assembly: Cable cores made up of 100 pair super-units consisting of four (4) 25 pair sub-units. Each group individually identifiable by color coded unit binders. Each 25 pair-unit within the 100 pair super-unit identified with a different binder color. (Note: "PIC MIRROR IMAGE" multi-unit identification used in cables over 900 pairs.)
e. Core Wrap: Non-hygroscopic dielectric tape applied longitudinally with an overlap.

4. Alvyn Sheath

a. Aluminum Shield: Corrugated, adhesive coated, 0.008" aluminum tape applied longitudinally with an overlap.
b. Jacket: Gray, flame retardant PVC jacket bonded to the coated aluminum.

5. Cable sizes defined in Contract Documents.

B. Manufacturer: Belden, Avaya, Inc., or Approved Equal.

2.3 UNSHIELDED TWISTED PAIR (UTP) CABLE

A. Category 6 UTP cable: Unshielded, 4 twisted-pair, 23 or 24 AWG copper, Category 6, NEC Article 800 type CMR rated, non-plenum type, tested to 550MHz, Superior Essex DataGain Category 6, #66-246-xA or Approved Equal, color per established scheme.

B. Category 6 UTP cable: Unshielded, 4 twisted-pair, 23 or 24 AWG copper, Category 6, NEC Article 800 type CMP rated, plenum type, tested to 550MHz, Superior Essex DataGain Category 6, #66-246-xB or Approved Equal, color per established scheme.

C. Other UTP cable: As indicated on the Drawings.

2.4 FIBER OPTIC (FO) CABLE

A. Indoor Fiber Optic backbone cable: 12 strand, 50/125 µm, multi-mode, tight-buffered, riser type, NEC rated OFNR/FT4, color coded, ripcord, 900 µm TBII buffer coating, 600m Serial 10 Gigabit Ethernet Distance, Siecor MIC #012T81-33191-24 or Approved Equal.

B. Outdoor Fiber Optic backbone cable: 12 strand, 50/125 µm, multi-mode, tight-buffered, indoor/outdoor type, NEC rated OFNR/FT4, color coded, ripcord, 900 µm buffer coating, UV-resistant flame retardant sheath, water-blocking tape, 600m Serial 10 Gigabit Ethernet Distance, Siecor FREEDM #012T8F-31191-29 or Approved Equal.

C. Buffer Tube Fan-Out Assemblies: Siecor BTF or Approved Equal.

D. Other Fiber Optic cable: As indicated on the Drawings.

2.5 FIBER BACKBONE CABLE

A. Provide fiber backbone in raceway between MDF and IDF racks consisting of (2) (12) strand multi-mode 62.5 um cables with ST connectors, Belden M9B382T or Approved Equal

PART 3 EXECUTION

3.1 GENERAL INSTALLATION

A. All installation work shall be performed according to published industry guidelines, rules, and regulations. If disputes occur, local, state, and national codes have precedence; then standards such as EIA/TIA; then guidelines from firms such as Building Industry Consulting Services International (BICSI), AT&T, GTE, Avaya, Inc. SYSTIMAX® and Northern Telecom; then finally, manufacturer recommendations.

B. The Contractor shall provide sufficient trained staff to monitor all work undertaken and ensure that the requirements of these specifications are met throughout the installation process.

C. All tests will be conducted using equipment that has Laboratory or manufacturer certified calibration within six months of the tests. The Contractor shall provide a signed copy of the calibration test results for each item of test equipment with the acceptance documentation.

D. The Contractor shall at all times make every effort to conduct all installation work in a manner so as to minimize the impact on the facilities. Whenever possible, all work will be hidden behind finished materials and all surfaces will be returned to their original condition.

E. The Contractor shall provide and install all pathway and cable support hardware necessary to successfully complete the installation. This includes, but is not limited to, hangers, ladder racks, support brackets, conduit and sleeves, firestop materials, tie-wraps, and access openings such as core drills.

F. The Contractor shall ensure that only staff fully qualified to work on specific types of materials are allowed to undertake the required installation. Particularly, copper and fiber optic cable placement, termination, splicing, and testing shall only be undertaken by staff who are certified by the Structured Cabling System manufacturer.

G. The Contractor shall provide all hardware, software, and miscellaneous components necessary to provide a complete system.

H. The Contractor and the owner's representative shall coordinate cutover schedules prior to installation. The work will be scheduled so that the voice and data networks will be out of service for a minimum period of time.

3.2 COPPER RISER CABLE

A. All riser cables shall be installed in a neat and orderly manner that provides the maximum amount of room for future cable additions. All riser conduits shall be pulled as full as possible. All cables shall be supported on each floor using at least three straps (not more than 30 inches apart) per floor. Riser cable shields shall be grounded on any floor in which pairs enter or leave the sheath. All shields shall be bonded end-to-end.

B. All riser conduits shall be sealed using a UL classified firestop. The Contractor shall provide a copy of the fire seal manufacturer's installation instructions and rating information prior to inspection of the installed materials.

3.3 COPPER STATION CABLE

A. All station cables shall be neatly dressed, secured, and concealed throughout the installation. Cables shall be secured with plastic ties to a snug fit but shall not deform the cable geometry. Ties shall be of a plenum-rated material if cable is installed within a plenum ceiling space.

B. All station cables shall be installed a minimum of six (6) inches above the ceiling T-bar grid and shall not be placed within (24) inches of overhead lights or any other potential source of electrical interference.. Ceiling grid supports, electrical conduit, water pipes, and HVAC ducting may not be used as supports.

C. In any area in which a fire-rated wall, partition, floor, or ceiling is penetrated, the Contractor shall be responsible for creating the pathway and sealing around all cables and sleeves with a UL classified fire seal sufficient to return the structure to its original rating. Creation of such openings as are necessary for cable passage between locations as shown on the drawings shall be the responsibility of the Contractor. Any opening in a rated structure created by the Contractor that is larger than one inch in diameter shall be equipped with a metal sleeve secured and fire-stopped in place.

D. In locations where the wall will not be fished and surface-mount raceways are utilized, all raceways must be mechanically secured to the structure a minimum of every four feet, must be routed at right angles to nearby structures or wall corners, and shall be neatly installed and trimmed to fit into and around other existing moldings or pathways such as the ceiling area. Raceways shall be placed vertically only in corners of rooms and horizontal raceway placed at baseboard height to extend the cable run to the actual outlet location.

E. All station cables shall be placed with a 1 meter maintenance loop (slack cable) neatly coiled and secured in the ceiling space above the MDF/IDF terminals to allow for future rearrangement.

F. The Contractor is responsible for removing, replacing, and repairing ceiling tiles in order to route all cables. Concealed spline ceiling tiles shall not be replaced until installation work in that area has been inspected and reviewed with the Owner and approval given to re-fix the ceiling in place.

G. Voice station cables shall be terminated on Panduit patch panels and shall be clearly marked with a unique identification number following the Owner's approved standards.

H. Data and network station cable shall be terminated on Panduit patch panels and shall be clearly marked with a unique identification number following the Owner's approved standards.

END OF SECTION

SECTION 16754
TELECOMMUNICATIONS DEMOLITION

PART 1 GENERAL

1.1 SCOPE

A. This section identifies the procedures for telecommunications demolition, specifically applicable to Division 16 sections, that is required in conjunction with the provision, installation, testing, and documentation of physical resources for the Owner's building installation.

B. Included are labor, materials, services, equipment and appliances required for completion of tasks as indicated on the drawings or in the standards or as inherently necessary to prepare spaces and systems for new installations.

PART 2 PRODUCTS

2.1 MATERIALS AND EQUIPMENT

A. Materials and equipment for patching and extending work: As specified in individual standards sections.

PART 3 EXECUTION

3.1 EXAMINATION

A. The Contractor shall verify that field measurements and all telecommunications equipment are as shown on the drawings.

B. The Contractor shall verify that abandoned wiring and equipment serve only abandoned facilities.

C. The Contractor shall report discrepancies between the drawings and actual field conditions to the Owner before disturbing existing installation.

D. Beginning of demolition means the Contractor accepts existing conditions.

3.2 PREPARATION

A. Two (2) weeks prior to disruption of existing telecommunications systems, the Contractor shall prepare and submit a plan to the Owner identifying all services that may be disrupted by the demolition. This plan shall also include any items or equipment that is to be returned to the Owner. (Only where noted on drawings)

B. The Contractor shall be responsible for procurement and payment of all permits and inspections required to complete the demolition phase of this project.

3.3 PRESERVATION OF EXISTING FACILITIES

A. Preserve and protect the following existing cabling infrastructure which is intended to be reused:
   1. Fiber-optic (FO) backbone cabling.
   2. "Central" UTP cabling that connects each IDF to the MDF.
   3. Existing copper voice backbone cabling.
   4. MDF & IDF racks.

3.4 DEMOLITION AND EXTENSION OF EXISTING TELECOMMUNICATIONS WORK

A. The Contractor shall demolish and extend existing telecommunications work under provisions of this Division and as indicated on the drawings.

B. Existing installations shall be removed, relocated, and/or extended to accommodate new construction.

C. All existing wall penetrations that will not be reused shall be sealed and shall match existing conditions.

D. Adjacent construction and finishes damaged during demolition and extension work shall be repaired.

E. Access to existing telecommunications installations that remain active shall be maintained.

F. Remove existing station cabling, outlets, and termination patch panel in preparation for replacement with new station outlets.

G. Remove existing telephone terminations, blocks, and cross connects that are not to be reused.

H. Remove all existing cable, copper, fiber, and coaxial cables, terminating blocks, and any other equipment no longer required unless otherwise noted.

I. The Contractor shall be responsible for disposing of all cable and equipment that is removed on the project. The Contractor shall pay for all associated costs and receive salvage credits for disposed cables and materials.

3.5 CLEANING AND REPAIR

A. Existing materials and equipment that remain or are to be reused shall be cleaned and repaired.

B. The Contractor shall be responsible for repairing all damaged building surfaces and openings left by the removal or relocation of telecommunications equipment and raceways.

END OF SECTION

SECTION 16755

TELECOMMUNICATIONS GROUNDING & BONDING

PART 1 GENERAL

1.1 SECTION INCLUDES

A. Related Sections

B. Applicable Publications

C. Work Sequencing and Coordination

D. Telecommunications Submittals

E. Quality Assurance

F. Project Record Documents

G. Qualifications

H. Regulatory Requirements

I. Performance Requirements

J. Materials

K. Execution

1.2 REFERENCES

A. American National Standards Institute (ANSI) Publication: C2-93 National Electrical Safety Code

B. Electronic Industries Alliance and Telecommunication Industries Association (EIA/TIA) Publications:
   1. EIA/TIA 568A - Commercial Building Telecommunications Wiring Standard
   2. EIA/TIA 569 - Commercial Building Standard for Telecommunications Pathways and Spaces
   3. EIA/TIA 607 - Commercial Building Grounding and Bonding Requirements for Telecommunications

C. Institute of Electrical and Electronic Engineers (IEEE) Publication: 142-1991 Recommended Practice for Grounding of Industrial and Commercial Power Systems

D. National Fire Protection Association (NFPA) Publication: 70-96 National Electrical Code (NEC)

E. Underwriters Laboratories, Inc. (U.L.) Publication:

1. 83-1983 Thermoplastic Insulated Wires
2. 467-84 (R86) Grounding and Bonding

1.3 SUBMITTALS

A. The Owner shall receive the following Contractor submittals:
   1. Product data for:
      a. Ground bus bars
      b. Connections (all types)
   2. Test Reports for:
      a. Overall resistance to ground and resistance of each bus bar.
      b. Ground resistance measurements made at each MDF/IDF, and designated telecommunications spaces.
   3. Manufacturer's Instructions: include instructions for storage, handling, protection, examination, preparation and installation of exothermic connectors.

1.4 QUALITY ASSURANCE

A. All grounding and bonding system work shall be tested and documented as defined in Section 16751 - Telecommunications Acceptance Testing.

B. For products or workmanship specified by association, trade, Federal, or State Standards, the Contractor shall comply with the requirements of the standard, except when more rigid requirements required by applicable codes shall apply.

1.5 PROJECT RECORD DOCUMENTS

A. The Contractor shall accurately record and submit to the Engineer of Record complete data regarding signal ground wire pathways, points of bonding, and point of connection to building grounds.

1.6 REGULATORY REQUIREMENTS

A. Telecommunications grounding and bonding shall conform to requirements of NFPA 70 and ANSI C2.

B. The Contractor shall furnish products listed and classified by Underwriters Laboratories, Inc. or testing firm acceptable to the Engineer of Record as suitable for purposes specified and shown.

1.7 PERFORMANCE REQUIREMENTS

A. Point to Point Resistance: 0.5 ohms or less.

PART 2 MATERIALS

2.1 MATERIALS AND EQUIPMENT

A. Materials and equipment shall conform to the respective standards and to the specifications stated herein. Electrical ratings shall be as indicated. Except where specifically indicated otherwise, the Contractor shall provide only new materials having all legally required approvals and/or labels. Materials shall conform to the requirements of UL 467 where applicable.

2.2 CONDUCTOR, UL 83

A. Ground and bonding conductors shall be green-insulated, soft-drawn stranded copper conductors, unless otherwise indicated, installed with sufficient slack to avoid breaking due to settlement and movement of conductors or attached points.

B. System grounding conductors shall be minimum of 3/0 AWG bare copper, unless otherwise indicated, and shall be continuous with no joints or splices.

2.3 CONNECTORS AND TERMINALS

A. Wire Connectors and Terminals for use with Copper Conductors: UL 486A.

2.4 GROUND BUS BARS

A. The Contractor shall provide ground bar with tapped standard NEMA bolt holes for 2-hole compression connectors, mounting brackets and insulators, sizes as indicated:
   1. 1/4" x 4" x 12", Lyncole XIT or Approved Equal in the ER and/or EF, and the network room.
   2. 1/4" x 4" x 5.25", Lyncole XIT or Approved Equal in all other telecommunication spaces.

PART 3 EXECUTION

3.1 INSTALLATION

A. The Contractor shall provide grounding and bonding in accordance with the requirements of NFPA 70, IEEE 142, EIA/TIA 568, EIA/TIA 607, state and local codes, the campus standards and to requirements specified herein. Codes shall be complied with as a minimum requirement, with these specifications prevailing when they are more stringent.

3.2 BONDING

A. Metallic conduits, wireways, metal enclosures of busways, cable boxes, equipment housings, cable racks and all non-current carrying metallic parts of the installed telecommunications services shall be grounded. The metallic conduit system shall be used for equipment and enclosure grounding but not as a system ground conductor. A code sized green insulated copper grounding conductor shall be included in nonmetallic conduits, and each end shall be terminated on suitable lug, bus, or bushing.

B. All metallic conduit stub-ups shall be grounded, and where multiple stub-ups are made within an equipment enclosure, they shall be equipped with grounding bushings and bonded together and to the enclosure and the enclosure ground bus.

C. Each metallic raceway, pipe, duct and other metal object entering the buildings shall be bonded together. The Contractor shall use #2 AWG bare copper conductors.

D. The Contractor shall bond telecommunications equipment and busbars separately.

3.3 SIGNAL REFERENCE GROUNDING AND BONDING

A. Each identified telecommunications space within a building shall have a common signal reference ground. The signal reference ground shall conform to the following:
   1. Within the building, all communication spaces shall be separately bonded to each other and connected to the primary building ground in accordance with the provisions of EIA/TIA 607. The communication ground shall not ground any other equipment or be connected to any potential high voltage source. All racks, frames, drain wires, and all installed communication equipment shall be grounded to this common reference ground only.
   2. Unless otherwise noted, the Contractor shall provide, as a minimum, a continuous #1/0 AWG green electrical conductor connected to a 1/4" x 4" x 5.25" telecommunications grounding bus bar (TGB) 6" AFF on the plywood backboard of each TR (or telecommunication space) to terminate chassis and other equipment grounds, unless otherwise specified.
   3. The ground wires from each individual TR shall be routed directly to the Equipment Room (ER) or Entrance Facility (EF), terminated and bonded together via a telecommunications main grounding bus bar (TMGB) of minimum 1/4" x 4" x 12" dimensions. This point of single reference for all closets in a building shall in turn be grounded with a minimum #1/0 AWG ground conductor to an acceptable building ground of 5 ohms or less. The building ground for signal reference shall be the building service entrance ground.

3.4 RISER/TIE CABLE GROUNDING

A. There shall be no bonding between the entry cable and the inside riser or distribution cable.

B. All riser and tie cable shields shall be bonded into a single continuous path end-to-end and grounded on each floor in which pairs leave the sheath. Cable shields shall be grounded to the signal reference ground provided in each telecommunication space.

3.5 FIELD TESTS

A. As an exception to requirements that may be stated elsewhere in these documents, the Owner shall be given five (5) working days notice prior to each test. The Contractor shall provide all test equipment and personnel and shall provide written copies of all test results.

B. Grounding and bonding system conductors and connections shall be inspected for tightness and proper installation.

C. The Contractor shall provide personnel and test equipment to perform a point to point resistance test before connecting equipment. Perform point to point tests in each building to determine the resistance between the main grounding system and all BDF/IDF ground busbars. Investigate and correct point to point resistance values that exceed 0.5 ohm. The

Contractor shall record resistance measurements, test point locations, ambient temperature and weather conditions at time of test.

END OF SECTION

CONTRACT NO.
0-706-7 #01

PROJECT MANUAL

VOLUME 2 OF 2

FOR

Service Center Relocation
(2025 Aviation Boulevard)

SONOMA COUNTY WATER AGENCY

JUNE 2011

SONOMA COUNTY WATER AGENCY

SERVICE CENTER RELOCATION (2025 AVIATION BOULEVARD)

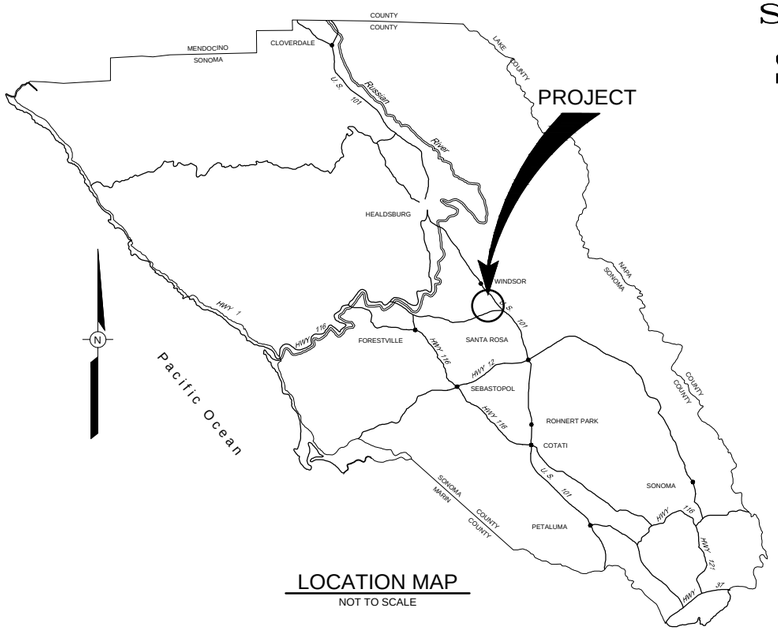

LOCATION MAP
NOT TO SCALE

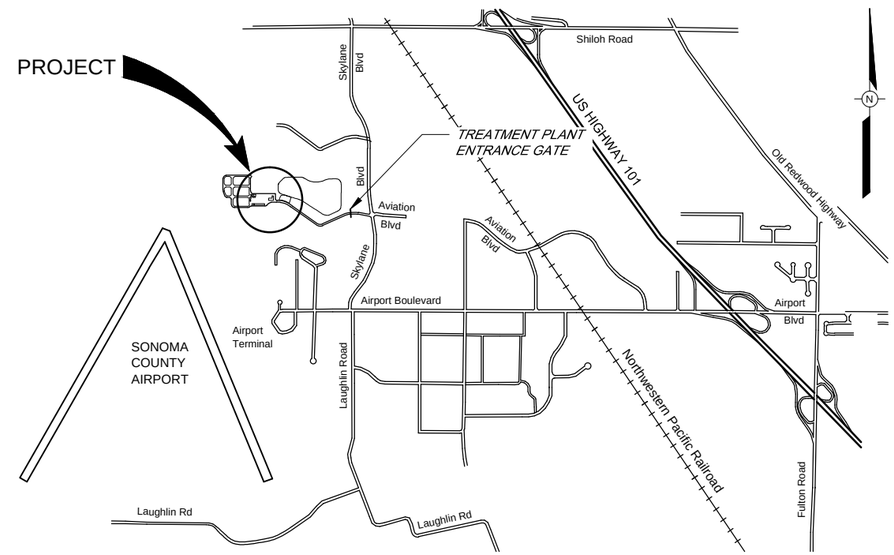

VICINITY MAP
NOT TO SCALE

DRAWING INDEX

SHEET NO	SHEET TITLE	SHEET DESCRIPTION
1	G-1	LOCATION MAP, VICINITY MAP, AND INDEX TO DRAWINGS
2	G-2	GENERAL NOTES, SYMBOLS, AND ABBREVIATIONS
3	C-1	SITE PLAN
4	C-2	UTILITY PLAN
5	C-3	GRADING PLAN
6	S1	STRUCTURAL ABBREVIATIONS, SYMBOLS, AND NOTES
7	S2	FOUNDATION PLAN
8	S3	STRUCTURAL DETAILS
9	S4	STRUCTURAL DETAILS
10	A-1	NEW SERVICE CENTER FLOOR PLAN
11	A-2	EXIT PLAN AND FIRE EXTINGUISHER LOCATION
12	A-3	NEW SERVICE CENTER ELEVATIONS
13	A-4	EXISTING SERVICE CENTER FLOOR PLAN, FINISH SCHEDULE, AND WEST PLUMBING PLAN
14	A-5	EXISTING SERVICE CENTER MISC DETAILS AND PLUMBING
15	A-6	EXISTING SERVICE CENTER ROOF PLAN
16	A-7	FINISH SCHEDULE
17	A-8	INTERIOR AND EXTERIOR BUILDING ELEVATION DETAILS
18	A-9	ROOF PLAN
19	A-10	GATE DETAILS
20	A-11	CONSTRUCTION DETAILS ADA
21	A-12	CONSTRUCTION DETAILS ADA
22	A-13	CONSTRUCTION DETAILS - MISC
23	A-14	CONSTRUCTION DETAILS - MISC
24	P-1	PLUMBING PLAN
25	M-1	PROCESS AND INSTRUMENTATION DIAGRAM
26	M-2	PLAN FILTER BUILDING DEMOLITION
27	M-3	PLAN FILTER BUILDING
28	M-4	SECTIONS
29	M-5	DETAIL SHEET
30	ME-1	ELECTRICAL SITE PLAN AND PANEL LAYOUTS
31	ME-2	INSTRUMENTAION DIAGRAM
32	ME-3	CONTROL PANEL
33	R-1	REF 42587
34	R-2	REF 42588
35	R-3	REF 42591

ELECTRICAL

SHEET No	SHEET TITLE	SHEET DESCRIPTION
36	E-001	ELECTRICAL SYMBOLS LEGEND AND INDEX
37	E-101	ELECTRICAL SITE PLAN
38	E-211	SERVICE CENTER DEMOLITION PLAN
39	E-212	SERVICE CENTER POWER & SIGNAL PLAN
40	E-213	EXISTING SERVICE CENTER LIGHTING PLAN
41	E-221	NEW SERVICE CENTER POWER PLAN
42	E-222	NEW SERVICE CENTER LIGHTING PLAN
43	E-223	NEW SERVICE CENTER SIGNAL PLAN
44	E-401	(E) SWITCHBOARD REPLACEMENT
45	E-501	ELECTRICAL DETAILS - 1
46	E-502	ELECTRICAL DETAILS - 2
47	E-601	ELECTRICAL SINGLE LINE DIAGRAM
48	E-602	ELECTRICAL SCHEDULES - 1
49	E-603	ELECTRICAL SCHEDULES - 2
50	E-604	ELECTRICAL SCHEDULES - 3
51	E-605	ELECTRICAL SCHEDULES - 4
52	E-606	FIRE ALARM RISER AND DETAILS
53	E-701	TITLE 24 DOCUMENTATION - 1
54	E-702	TITLE 24 DOCUMENTATION -2

MECHANICAL

SHEET No	SHEET TITLE	SHEET DESCRIPTION
55	M0.00	MECHANICAL SCHEDULES
56	M0.10	MECHANICAL DETAILS
57	M2.10	EXISTING SERVICE CENTER MECHANICAL PLAN
58	M2.20	NEW SERVICE CENTER MECHANICAL PLAN
59	M4.10	EXISTING SERVICE CENTER PIPING PLAN
60	M4.20	NEW SERVICE CENTER PIPING PLAN
61	T24.10	TITLE 24 DOCUMENTATION EXISTING BLDG - SHEET 1
62	T24-20	TITLE 24 DOCUMENTATION EXISTING BLDG - SHEET 2
63	T24-30	TITLE 24 DOCUMENTATION NEW BLDG - SHEET 1
64	T24-40	TITLE 24 DOCUMENTATION NEW BLDG - SHEET 2

REGISTERED PROFESSIONAL ENGINEER
DENNIS M. DALY
No. 32947
CIVIL
STATE OF CALIFORNIA

BAR LENGTH ON ORIGINAL DRAWING EQUALS ONE INCH, ADJUST SCALE ACCORDINGLY

NO.	DATE	REVISION	BY

SONOMA COUNTY WATER AGENCY

SCALE: AS SHOWN
DATE: 06-06-11
DRAWN: SMP
REVIEWED:

SERVICE CENTER RELOCATION (2025 AVIATION BOULEVARD)

LOCATION MAP, VICINITY MAP, AND INDEX TO DRAWINGS

FILE NAME: 7449_Gen.dwg
CONTRACT NUMBER: 0-706-7 #01
DRAWING NUMBER: G-1
SHEET 1 OF 64

\\Sd-data\proj\general\all Facilities\office-sites\7449_Fleet_ALW-TP\7449_Gen.dwg

ABBREVIATIONS

ACP	ASBESTOS CONCRETE PIPE
AFF	ABOVE FINISH FLOOR
AL	ALUMINUM
BD	BOARD
℄	CENTERLINE
CG	CHLORINE GAS
CI	CURB INLET
CMP	CORRUGATED METAL PIPE
CO	CLEANOUT
COL	COLUMN
CONC	CONCRETE
CONT	CONTINUOUS
CS	CHLORINE SOLUTION
CV	CHECK VALVE
CW	COLDWATER
DI	DROP INLET
DIA	DIAMETER
DOC	DOCUMENT
EA	EACH
EL	ELEVATION
ELEC	ELECTRICAL
E/P	EDGE PAVEMENT
EX	EXISTING
EQUIV	EQUIVALENT
FH	FIRE HYDRANT
FL	FLOWLINE
FM	FORCE MAIN
F.O.	FACE OF
GA	GAUGE
GALV	GALVANIZED
GYP	GYPSUM
GYP BD	GYPSUM BOARD
HDPE	HIGH DENSITY POLYETHYLENE
HVAC	HEATING, VENTILATION, & AIR CONDITIONING
HW	HOT WATER
HWH	HOT WATER HEATER
INV	INVERT
MH	MANHOLE
MIN	MINIMUM
MFS	MODULAR FURNITURE SYSTEM
PLYWD	PLYWOOD
PW	POTABLE WATER
OC	ON CENTER
OL	OCCUPANCY LEVEL
RD	ROOF DRAIN
RECPT	RECEPTACLE
REINF	REINFORCEMENT
REQ'D	REQUIRED
RW	RECYCLED WATER
RWR	RECYCLED WATER RETURN
SD	STORM DRAIN
SDMH	STORM DRAIN MANHOLE
SMP	STREAM MAINTENANCE PROGRAM
SS	SANITARY SEWER
SSMH	SANITARY SEWER MANHOLE
TS	TUBE STEEL
TYP	TYPICAL
VWD	VENT/WASTE/DRAIN
W/	WITH
WV	WATER VALVE

SITE PLAN LEGEND

LINES

BOUNDARY
PARCEL
CENTER
EASEMENT

CHLORINE GAS — CG —
CHLORINE SOLUTION — CS —
COLD WATER — CW —
EDGE PAVEMENT — E/P —
ELECTRICAL - - - ELEC - - -
GAS - - - 3"G - - -
HOT WATER — HW —
JOINT TRENCH - - - JT - - -
RECYCLED WATER — RW —
RECYCLED WATER RETURN — RWR —
POTABLE WATER — RWR —
SEWER - - - SS - - -
TELEPHONE - - - T - - -
WATER - - - W - - -
STORM DRAIN — EXISTING 24"SD —
WATER - - - 8"W - - -
SEWER - - - 12"S - - -
REMOVE
TREELINE

TOPOGRAPHY

WATER METER — WM
WATER VALVE
BLOWOFF
FIRE HYDRANT
GAS METER — GM
CATCH BASIN
STORM DRAIN INLET
STORM DRAIN MANHOLE — D
SEWER MANHOLE — S
SEWER CLEANOUT
HOSE BIB
JOINT POLE — JP
LIGHT STANDARD
GUY/ANCHOR
CURB & GUTTER
A.C. DIKE
FENCE — X — X —
CHAIN LINK FENCE
DITCH/SWALE
DIRECTION OF FLOW
GROUND RODS
PROJECT CONTROL POINT — △ 103

TYPICAL SECTION LETTERING AND DETAIL NUMBERING SYSTEM

SECTION AND DETAIL CALLOUTS ON DRAWING NO. C-12 REFERENCED TO DRAWING NO. M-5:

SECTION LETTER — A
DRAWING NO. WHERE IT APPEARS — M–5

DETAIL NUMBER — 1
DRAWING NO. WHERE DETAIL APPEARS — M–5

SECTION AND DETAIL TO BE FOUND ON SAME DRAWING AS CALLOUT: A – 1 –

ON DRAWING NO. M-5 THIS DETAIL TITLE IS SHOWN AS: DETAIL 1 C–12

DETAIL NUMBER — 1
DRAWING NO. WHERE DETAIL CALLOUT APPEARS (BACK REFERENCE OR VARIES) — C–12

ON DRAWING NO. M-5 THIS SECTION TITLE IS SHOWN AS: SECTION A C–12

SECTION LETTER — A
DRAWING NO. WHERE SECTION CUT APPEARS (BACK REFERENCE) — C–12

BAR LENGTH ON ORIGINAL DRAWING EQUALS ONE INCH. ADJUST SCALE ACCORDINGLY

REGISTERED PROFESSIONAL ENGINEER DENNIS M. DAILY No. 32967 CIVIL STATE OF CALIFORNIA

NO.	DATE	REVISION	BY

SONOMA COUNTY WATER AGENCY

SCALE: AS SHOWN
DATE: 06-06-11
DRAWN: SMP
REVIEWED:

SERVICE CENTER RELOCATION (2025 AVIATION BOULEVARD)

GENERAL NOTES, SYMBOLS, AND ABBREVIATIONS

FILE NAME: 7449_Gen.dwg
CONTRACT NUMBER: 0-706-7 #01
DRAWING NUMBER: G-2
SHEET 2 OF 64

\\Sd-data\proj\general\all Facilities\office-sites\7449_Fleet_ALW-TP\7449_Gen.dwg

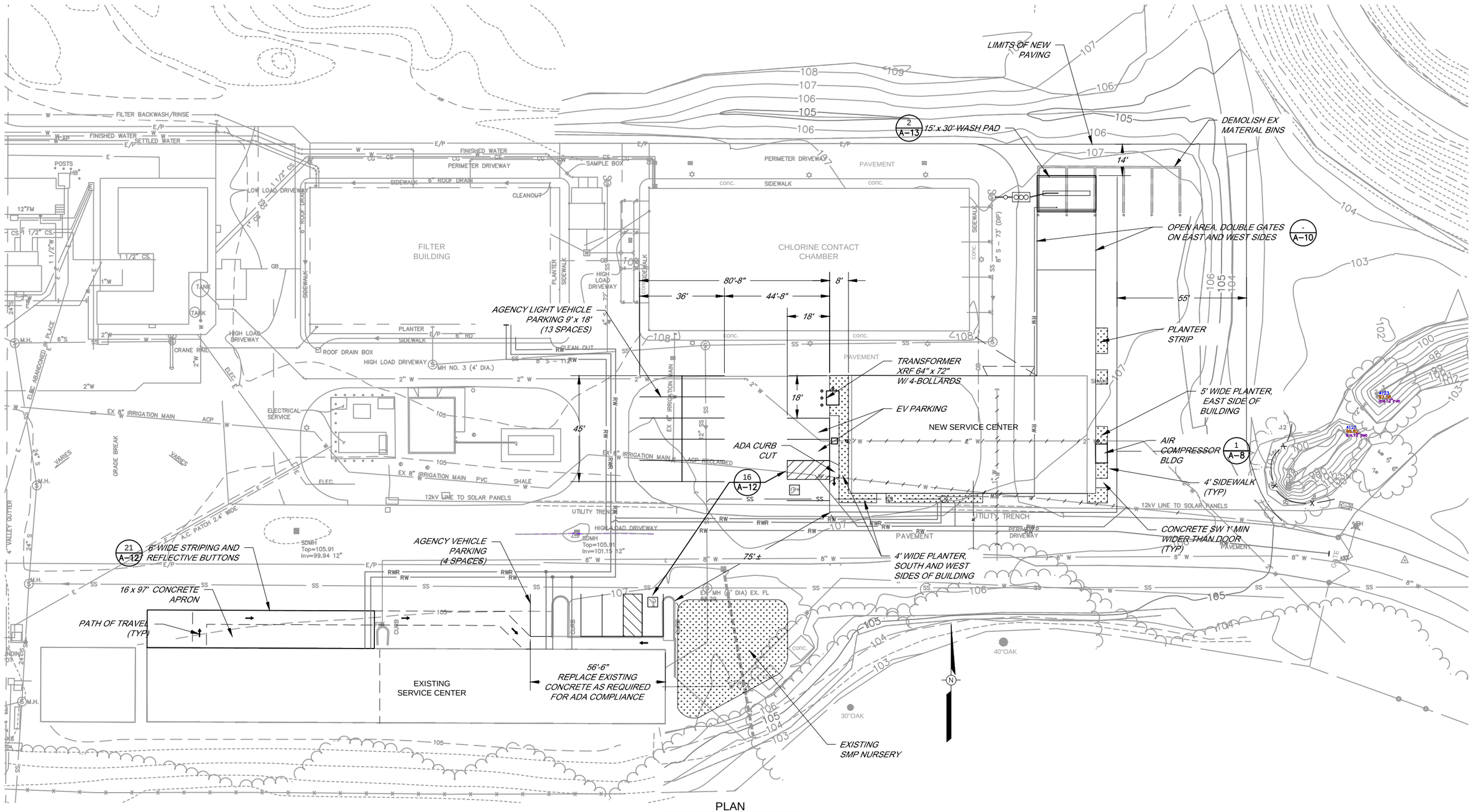

PLAN
SCALE: 1" = 20'-0"

BAR LENGTH ON ORIGINAL DRAWING EQUALS ONE INCH. ADJUST SCALE ACCORDINGLY

REGISTERED PROFESSIONAL ENGINEER DENNIS M. DALY No. 32967 CIVIL STATE OF CALIFORNIA

NO.	DATE	REVISION	BY

SONOMA COUNTY WATER AGENCY

SCALE: AS SHOWN
DATE: 06-06-11
DRAWN: SMP
REVIEWED:

SERVICE CENTER RELOCATION (2025 AVIATION BOULEVARD)

SITE PLAN

FILE NAME: 7449_Site.dwg
CONTRACT NUMBER: 0-706-7 #01
DRAWING NUMBER: C-1
SHEET 3 OF 64

\\Sd-data\proj\general\all Facilities\office-sites\7449_Fleet_ALW-TP\7449_Site.dwg

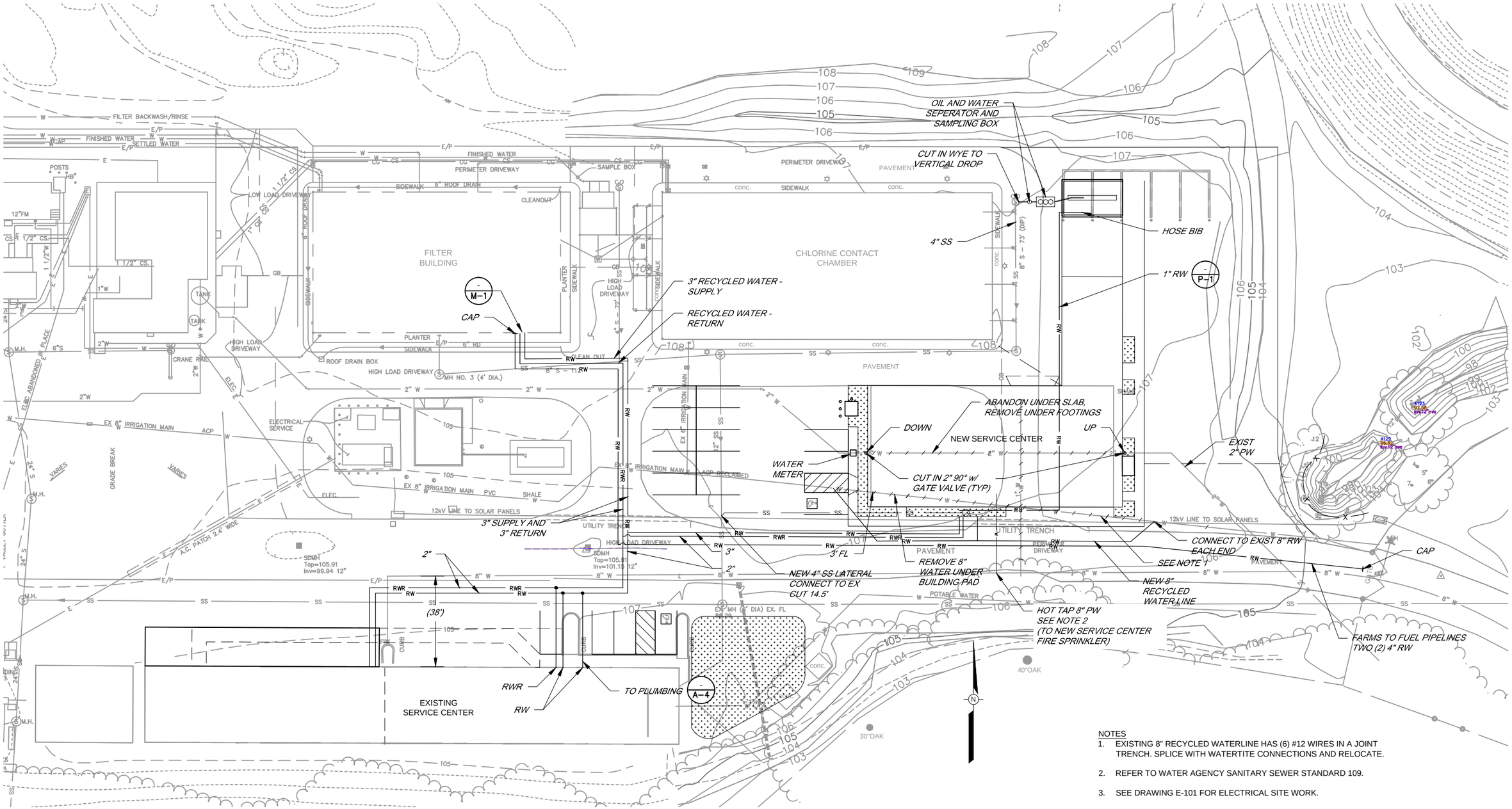

PLAN
SCALE: 1" = 20'-0"

BAR LENGTH ON ORIGINAL DRAWING EQUALS ONE INCH. ADJUST SCALE ACCORDINGLY

REGISTERED PROFESSIONAL ENGINEER DENNIS M. DALY No. 32967 CIVIL STATE OF CALIFORNIA

NO.	DATE	REVISION	BY

SONOMA COUNTY WATER AGENCY

SCALE: AS SHOWN
DATE: 06-06-11
DRAWN: SMP
REVIEWED:

SERVICE CENTER RELOCATION (2025 AVIATION BOULEVARD)

UTILITY PLAN

FILE NAME: 7449_Site.dwg
CONTRACT NUMBER: 0-706-7 #01
DRAWING NUMBER: C-2
SHEET 4 OF 64

\\Sd-data\proj\general\all Facilities\office-sites\7449_Fleet_ALW-TP\7449_Site.dwg

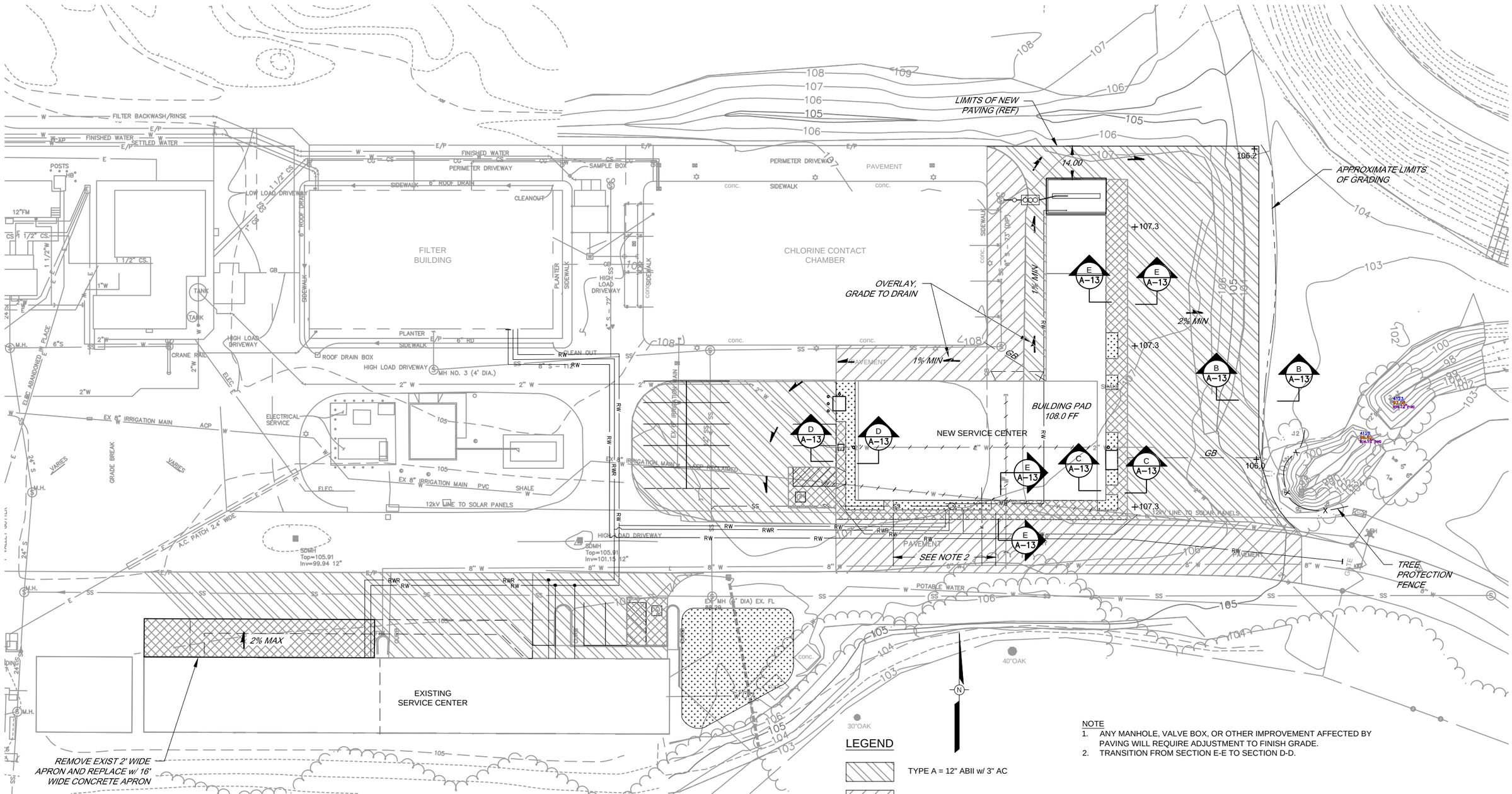

PLAN

SCALE: 1" = 20'-0"

LEGEND

- TYPE A = 12" ABII w/ 3" AC
- VARIABLE DEPTH AC OVERLAY
- CONCRETE APRON
- PLANTER STRIP

NOTE

1. ANY MANHOLE, VALVE BOX, OR OTHER IMPROVEMENT AFFECTED BY PAVING WILL REQUIRE ADJUSTMENT TO FINISH GRADE.
2. TRANSITION FROM SECTION E-E TO SECTION D-D.

BAR LENGTH ON ORIGINAL DRAWING EQUALS ONE INCH. ADJUST SCALE ACCORDINGLY

REGISTERED PROFESSIONAL ENGINEER DENNIS M. DALY No. 32947 CIVIL STATE OF CALIFORNIA

NO.	DATE	REVISION	BY

SONOMA COUNTY WATER AGENCY

SCALE: AS SHOWN	DATE: 06-06-11
DRAWN: SMP	
REVIEWED:	

SERVICE CENTER RELOCATION (2025 AVIATION BOULEVARD)

GRADING PLAN

FILE NAME: 7449_Site.dwg
CONTRACT NUMBER: 0-706-7 #01

DRAWING NUMBER: C-3

SHEET 5 OF 64

\\Sd-data\proj\general\all Facilities\office-sites\7449_Fleet_ALW-TP\7449_Site.dwg

STRUCTURAL ABBREVIATIONS

℄	CENTERLINE
#	PENNY (NAIL SIZE)
⅊	PLATE
AB	ANCHOR BOLT
ADDL	ADDITIONAL
AFF	ABOVE FINISHED FLOOR
ALT	ALTERNATE
AL	ALUMINUM
APPROX	APPROXIMATE
ARCH	ARCHITECT / ARCHITECTURAL
AVG	AVERAGE
BD	BOARD
BFF	BELOW FINISHED FLOOR
BLDG	BUILDING
BM	BEAM
BOF	BOTTOM OF FOOTING
BOT	BOTTOM
BRG	BEARING
BTWN	BETWEEN
CBORE	COUNTER BORE
CIP	CAST IN PLACE
CJ	CONTROL/CONSTRUCTION JOINT
CKRD	CHECKERED
CLG	CEILING
CLR	CLEAR
CMU	CONCRETE MASONRY UNIT
COL	COLUMN
CONC	CONCRETE
CONN	CONNECTION
CONST	CONSTRUCTION
CONT	CONTINUOUS
CJP	COMPLETE JOINT PENETRATION
CTR	CENTER
CTSK	COUNTERSINK
DBL	DOUBLE
DF	DOUGLASS FIR
DIA	DIAMETER
DIAG	DIAGONAL
DIM	DIMENSION
DIST	DISTANCE
DN	DOWN
DO	DITTO
DWG	DRAWING
(E)	EXISTING
EA	EACH
EE	EACH END
EF	EACH FACE
EL	ELEVATION
ELEC	ELECTRICAL
EMBED	EMBEDMENT
EN	EDGE NAILING
EQPT	EQUIPMENT
EQ	EQUAL
ES	EACH SIDE
EW	EACH WAY
EXP	EXPANSION
EXT	EXTERIOR
FDN	FOUNDATION
FF	FINISH FLOOR
FG	FINISH GRADE
FIN	FINISH
FLR	FLOOR
FN	FIELD NAILING
FOC	FACE OF CONCRETE / COLUMN
FOM	FACE OF MASONRY
FOCC	FACE OF CONCRETE CURB
FOS	FACE OF STUD / STEEL
FOW	FACE OF WALL
FRMG	FRAMING
FS	FAR SIDE
FT	FOOT / FEET
FTG	FOOTING
FUT	FUTURE
GA	GAUGE
GALV	GALVANIZED
GDR	GIRDER
GLB	GLUED LAMINATED BEAM
GRD	GRADE
GRND	GROUND
GYP	GYPSUM
HD	HOLDOWN
HDR	HEADER
HGR	HANGER
HORIZ	HORIZONTAL
HSS	HOLLOW STRUCTURAL SECTION
HT	HEIGHT
ID	INSIDE DIAMETER
INT	INTERIOR
JST	JOIST
JT	JOINT
L	LENGTH / ANGLE SHAPE
LAT	LATERAL
LF	LINEAL FOOT
LLH	LONG LEG HORIZONTAL
LLV	LONG LEG VERTICAL
MAX	MAXIMUM
MB	MACHINE BOLT
MFR	MANUFACTURER
MIN	MINIMUM
MISC	MISCELLANEOUS
(N)	NEW
NOM	NOMINAL
NS	NEAR SIDE
NTS	NOT TO SCALE
OC	ON CENTER
OD	OUTSIDE DIAMETER
OF	OUTSIDE FACE
OH	OVERHEAD
OPNG	OPENING
OPP	OPPOSITE
ORIG	ORIGINAL
PEN	PLYWOOD EDGE NAILING
PEMB	PRE-ENGINEERED METAL BUILDING
PLYWD	PLYWOOD
PJP	PARTIAL JOINT PENETRATION
PTDF	PRESSURE TREATED DOUGLAS FIR
PVC	POLYVINYL CHLORIDE
R	RADIUS
REF	REFERENCE
REINF	REINFORCING
REQD	REQUIRED
RFTR	RAFTER
RO	ROUGH OPENING
RWD	REDWOOD
SAD	SEE ARCHITECTURAL DRAWINGS
SB	SOLID BLOCK
SCD	SEE CIVIL DRAWINGS
SCH	SCHEDULE
SED	SEE ELECTRICAL DRAWINGS
SF	SQUARE FEET
SHT	SHEET
SHTG	SHEATHING
SIM	SIMILAR
SLAD	SEE LANDSCAPE ARCHITECT DRAWINGS
SMD	SEE MECHANICAL DRAWINGS
SP	SPACE
SPEC	SPECIFICATION
SQ	SQUARE
SS	STAINLESS STEEL
STGD	STAGGERED
STD	STANDARD
STIFF	STIFFENER
STL	STEEL
STRUC	STRUCTURAL
SW	SHEAR WALL
SYM	SYMMETRICAL
T&B	TOP AND BOTTOM
T&G	TONGUE AND GROOVE
TOC	TOP OF CONCRETE
TOCC	TOP OF CONCRETE CURB
THRD	THREADED
THK	THICK
TN	TOE NAIL
TOF	TOP OF FOOTING
TOS	TOP OF STEEL
TOT	TOTAL
TOW	TOP OF WALL
TU	TILT-UP
TYP	TYPICAL
UNO	UNLESS NOTED OTHERWISE
VERT	VERTICAL
VIF	VERIFY IN FIELD
W/	WITH
W/O	WITHOUT
WP	WORK POINT
WWF	WELDED WIRE FABRIC

STRUCTURAL SYMBOLS

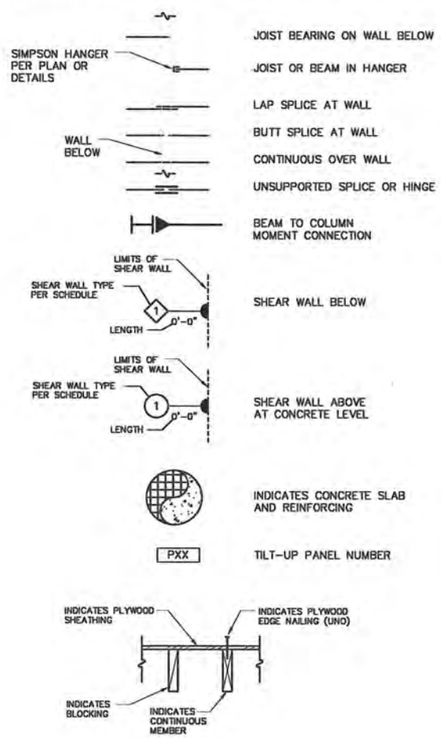

DESIGN CRITERIA

1. ASSUMED ALLOWABLE SOIL BEARING PRESSURE:
   DEAD LOAD + LIVE LOAD.....= 1500 PSF
   TOTAL LOADS (INCLUDING WIND & SEISMIC).....= 2000 PSF
2. METAL BUILDING COLUMN REACTIONS HAVE BEEN ESTIMATED FOR THE PURPOSES OF PREPARING THIS PRELIMINARY FOUNDATION PLAN. THE ACTUAL COLUMN REACTIONS PREPARED BY THE SELECTED METAL BUILDING MANUFACTURER SHALL BE PROVIDED TO OWNER TO VERIFY THE FOUNDATION DESIGN PRIOR TO PERMIT ISSUANCE AND CONSTRUCTION.

GENERAL STRUCTURAL NOTES

1. DO NOT SCALE STRUCTURAL DRAWINGS. IF DIMENSIONS ARE OMITTED OR NOT CLEAR, CONTACT THE OWNER.
2. SYMBOLS AND NOTES SHOWN ON THIS SHEET ARE TYPICAL AND SHALL APPLY UNLESS OTHERWISE SHOWN OR NOTED. DETAILS OF CONSTRUCTION NOT FULLY SHOWN SHALL BE OF THE SAME NATURE AS SHOWN FOR SIMILAR CONDITIONS.

G:\CAD Projects\2008\08034\STRUCTURAL\WORKING\Fleet Center Bldg\Working\08034ST1

BAR LENGTH ON ORIGINAL DRAWING EQUALS ONE INCH. ADJUST SCALE ACCORDINGLY

SUMMIT

SUMMIT ENGINEERING INC.

463 AVIATION BLVD. #200
SANTA ROSA, CA 95403
Phone 707.527.0775 Fax 707.527.0212

REGISTERED PROFESSIONAL ENGINEER ANDREW TCHEBOTAR No.52852 Exp.9-30-2011 STRUCTURAL STATE OF CALIFORNIA

FOR BID PUPOSES ONLY

NO.	DATE	REVISION	BY
	05/24/2011	BID SET	

SONOMA COUNTY WATER AGENCY

SCALE : AS NOTED
DATE : 05/24/2011
DRAWN : JO
REVIEWED : AT

SERVICE CENTER RELOCATION (2025 AVIATION BOULEVARD)

STRUCTURAL ABBREVIATIONS, SYMBOLS AND NOTES

FILE NAME: 7449_TITLE SHEET
CONTRACT NUMBER: 0-708-7/01

DRAWING NUMBER: S1

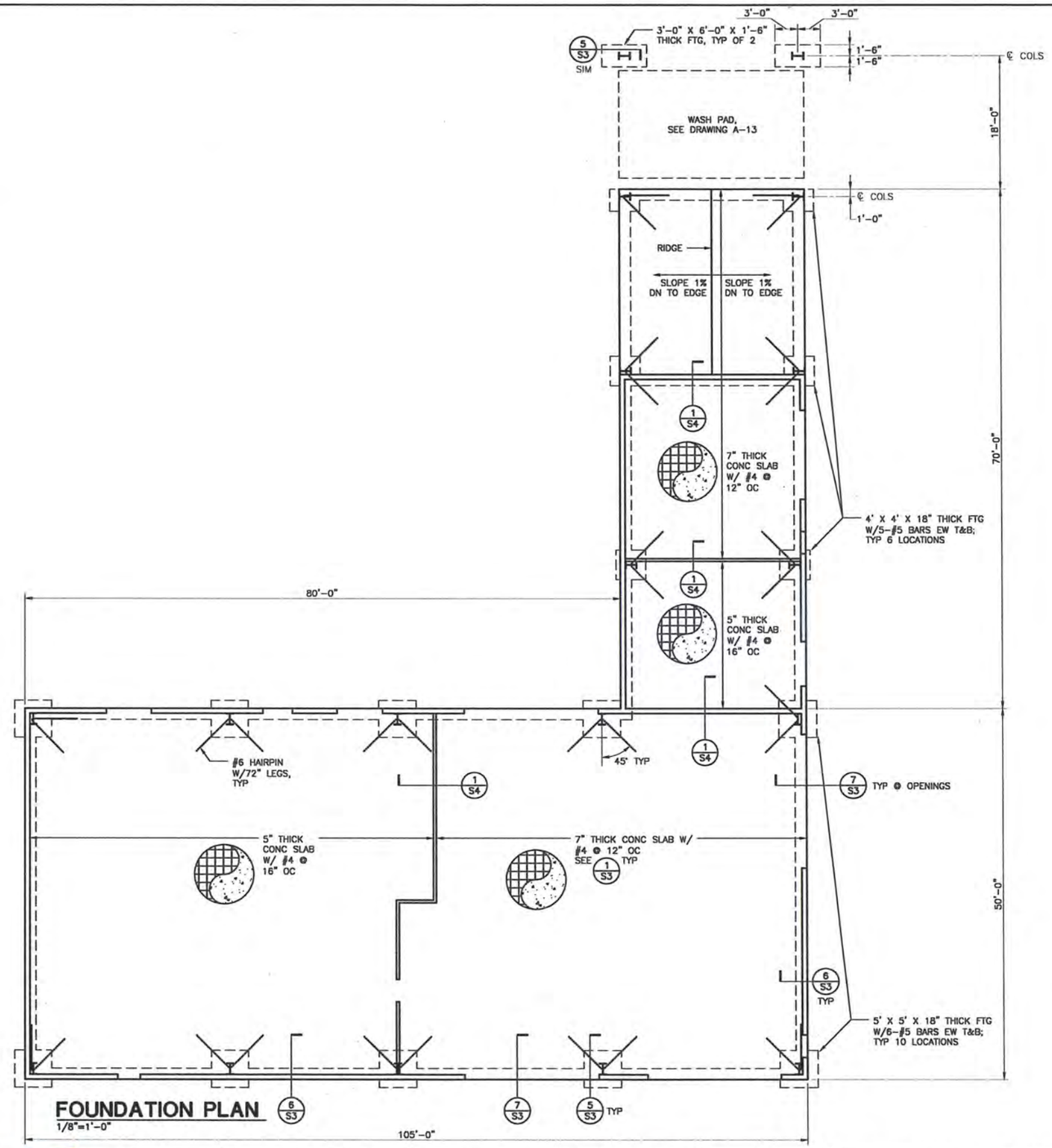

FOUNDATION PLAN

1/8"=1'-0"

FOUNDATION PLAN NOTES

1. FOR ADDITIONAL TYPICAL REINFORCING DETAILS, SEE 2-4/S3.
2. SEE CIVIL DRAWINGS FOR FINISH GRADES OUTSIDE BUILDING.
3. FOR PIPES THROUGH OR BELOW FOOTINGS, SEE DETAILS 2-4/S4.

BAR LENGTH ON ORIGINAL DRAWING EQUALS ONE INCH. ADJUST SCALE ACCORDINGLY

SUMMIT ENGINEERING INC.
463 AVIATION BLVD. #200
SANTA ROSA, CA 95403
Phone 707.527.0775 Fax 707.527.0212

REGISTERED PROFESSIONAL ENGINEER ANDREW TCHIKOVANI No.52852 Exp.9-30-2011 STRUCTURAL STATE OF CALIFORNIA

FOR BID PUPOSES ONLY

NO.	DATE	REVISION	BY
	05/24/2011	BID SET	
	02-24-2011		

SONOMA COUNTY WATER AGENCY

SCALE: AS NOTED
DATE: 05/24/2011
DRAWN: JO
REVIEWED: AT

SERVICE CENTER RELOCATION (2025 AVIATION BOULEVARD)
FOUNDATION PLAN

FILE NAME: 7449_FOUNDATION PLAN
CONTRACT NUMBER: 0-706-7/01
DRAWING NUMBER: S2
SHEET 7 OF 64

G:\CAD Projects\2009\08034\STRUCTURAL\WORKING\Fleet Center Bldg\Working\08034ST1

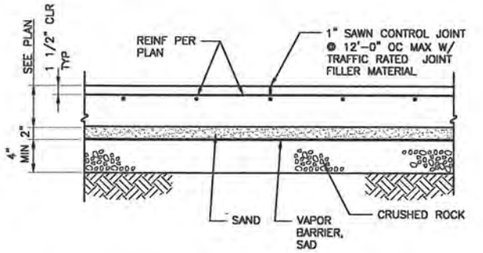

CONTROL JOINT

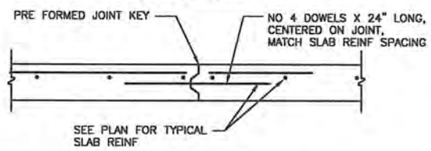

CONSTRUCTION JOINT

TYP BUILDING SLAB (1)

NTS C6-B

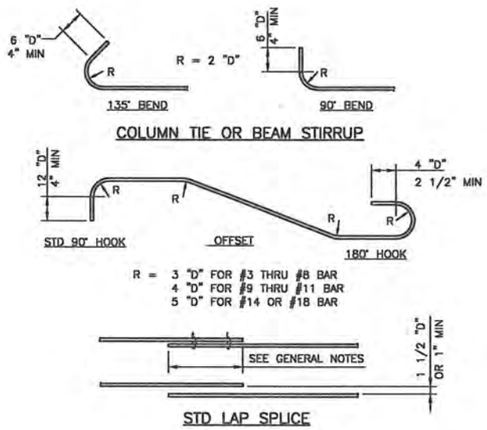

REINF STEEL DETAIL (2)

NTS C12-A

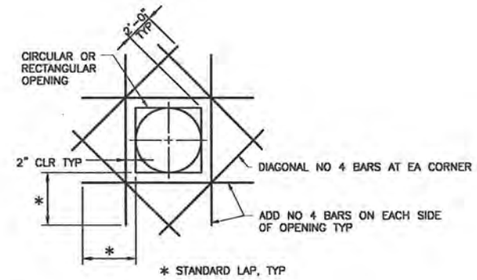

NOTES:

1. AREA OF ADDL BARS AT EACH EDGE OF OPENING IN EACH DIRECTION SHALL MATCH 1/2 THE CROSS SECTIONAL AREA OF THE INTERRUPTED BARS.
2. PROVIDE STANDARD HOOKS ON BARS IF STRAIGHT EXTENSION PAST THE OPENING CANNOT BE ACHIEVED.
3. PLACE ADDL BARS IN SAME PLANES AS INDICATED REINFORCING.
4. SPACE DIAGONAL BARS UNDER INDICATED REINFORCING

ADDITIONAL REINF @ OPENINGS IN CONC SLABS (3)

NTS C6-K

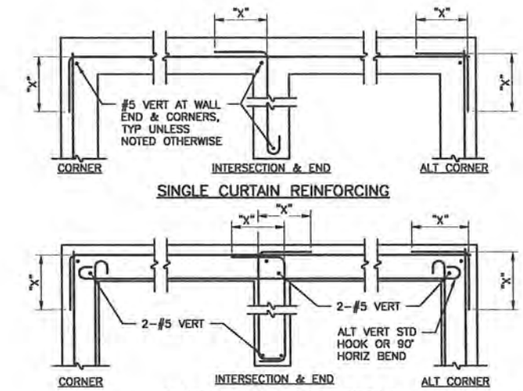

NOTE:
"X" = 45 DIA AT CONC & 40 DIA AT MASONRY UNLESS NOTED OTHERWISE

REINFORCEMENT DETAILS AT CORNERS & INTERSECTIONS (4)

NTS C13-A

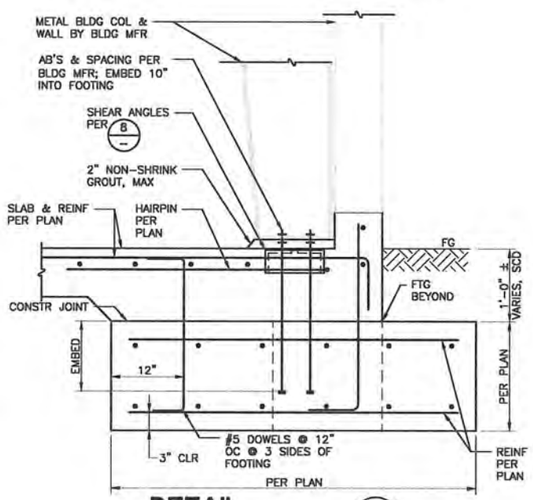

DETAIL (5)

NTS

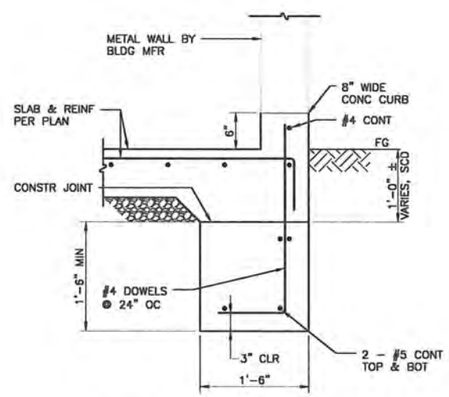

DETAIL (6)

NTS

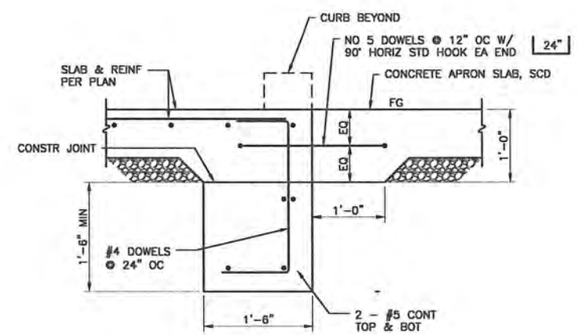

DETAIL (7)

NTS

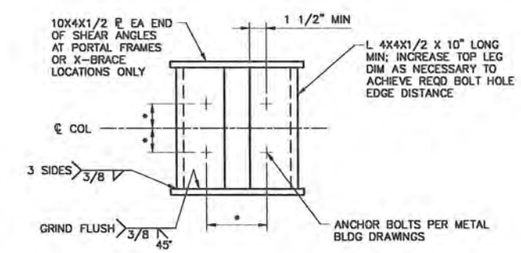

PLAN VIEW

DETAIL (8)

NTS

BAR LENGTH ON ORIGINAL DRAWING EQUALS ONE INCH. ADJUST SCALE ACCORDINGLY

SUMMIT ENGINEERING INC.
463 AVIATION BLVD. #200
SANTA ROSA, CA 95403
Phone 707.527.0775 Fax 707.527.0212

REGISTERED PROFESSIONAL ENGINEER ANDREW TCHOUPINE No.52852 Exp.9-30-2011 STRUCTURAL STATE OF CALIFORNIA

FOR BID PUPOSES ONLY

NO.	DATE	REVISION	BY
	05/24/2011	BID SET	
	2-01-2011	COORDINATION REVISIONS	

SONOMA COUNTY WATER AGENCY

SCALE: AS NOTED
DATE: 05/24/2011
DRAWN: JO
REVIEWED: AT

SERVICE CENTER RELOCATION (2025 AVIATION BOULEVARD)
STRUCTURAL DETAILS

FILE NAME: 7449_STRUCTURAL DETAILS
CONTRACT NUMBER: 0-706-7/01
DRAWING NUMBER: S3
SHEET 8 OF 64

G:\CAD Projects\2009\08024\STRUCTURAL\WORKING\Fleet Center Bldg\Working\08024ST1

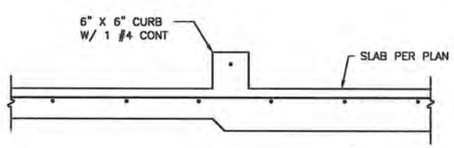

DETAIL 9
NTS

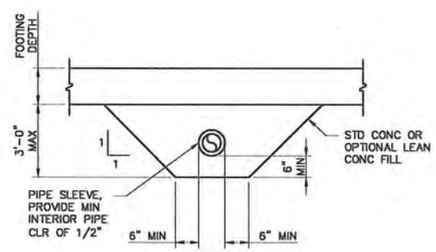

NOTE:
PLACE LEAN CONCRETE FILL AROUND PIPE AT SAME WIDTH AS FOOTING AND FULL WIDTH OF PIPE TRENCH.

PIPE BELOW FOOTING 2
NTS C1-B

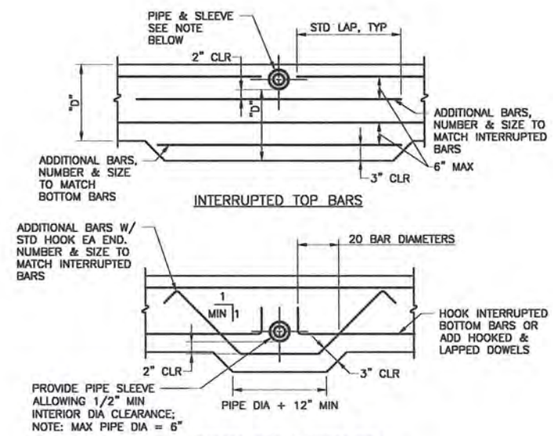

PIPES WHICH INTERRUPT FOUNDATION REINFORCING 3
NTS C1-C

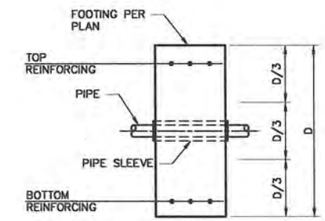

NOTES:

1. FOR PIPES WHICH PASS THROUGH THE MIDDLE THIRD OF FOOTING, PROVIDE PIPE SLEEVE ALLOWING 1/2" MIN INTERIOR DIA CLEARANCE.
2. FOR PIPES WHICH PASS THROUGH FOOTING OUTSIDE MIDDLE THIRD, BUT DO NOT INTERRUPT REINF, CONTACT OWNER FOR FURTHER DIRECTION.
3. FOR PIPES WHICH INTERRUPT REINF, SEE 4/S3

PIPES THROUGH FOOTINGS 4
NTS C1-D

BAR LENGTH ON ORIGINAL DRAWING EQUALS ONE INCH. ADJUST SCALE ACCORDINGLY

SUMMIT ENGINEERING INC.
463 AVIATION BLVD. #200
SANTA ROSA, CA 95403
Phone 707.527.0775 Fax 707.527.0212

REGISTERED PROFESSIONAL ENGINEER ANDREW TCHOBANOF No.52852 Exp.9-30-2011 STRUCTURAL STATE OF CALIFORNIA

FOR BID PUPOSES ONLY

NO.	DATE	REVISION	BY
	05/24/2011	BID SET	

SONOMA COUNTY WATER AGENCY

SCALE: AS NOTED | DATE: 05/24/2011
DRAWN: JO
REVIEWED: AT

SERVICE CENTER RELOCATION (2025 AVIATION BOULEVARD)
STRUCTURAL DETAILS

FILE NAME: 7449_STRUCTURAL DETAILS
CONTRACT NUMBER: 0-706-7/01
DRAWING NUMBER: S4
SHEET 9 OF 64

G:\CAD Projects\0708\08034\STRUCTURAL\WORKING\Fleet Center Bldg\Working\08034ST1

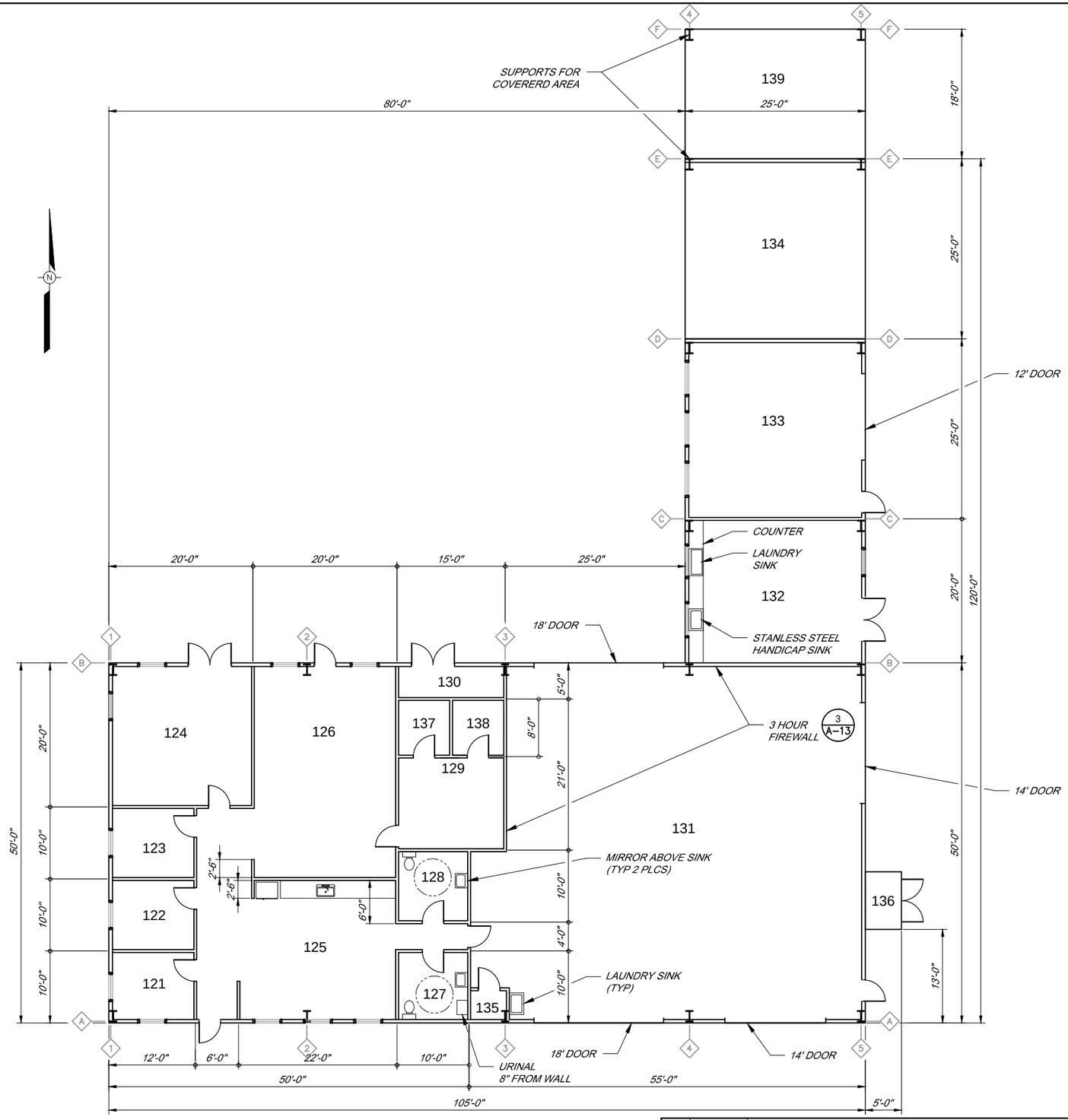

PLAN VIEW
SCALE: 1/8" = 1'-0"

ROOM No KEY

ROOM No	DESCRIPTION
121	OFFICE
122	OFFICE
123	OFFICE
124	WATER EDUCATION
125	LUNCH ROOM
126	LEAD CUBICLES
127	MEN'S RESTROOM
128	WOMEN'S RESTROOM
129	STORAGE (SMP)
130	ELECTRICAL /DATA
131	HEAVY EQUIPMENT/COLLECTIONS
132	FISHERIES
133	FISHERIES STORAGE
134	COVERED STORAGE/WORK AREA
135	FIRE CLOSET
136	AIR COMPRESSOR
137	STORAGE (SMP) CLOSET
138	STORAGE (SMP) CLOSET
139	WASH PAD

NOTE
1. COLUMN LOCATIONS ARE SCHEMATIC ONLY. CONTRACTOR IS RESPONSIBLE FOR COLUMN LAYOUT.
2. CLOSED FULL HEIGHT WALL AT BUILDING LINE "E".
3. ALL WORK TO MEET CURRENT ADA STANDARDS.

REGISTERED PROFESSIONAL ENGINEER DENNIS M. DAUGHERTY No. 32967 CIVIL STATE OF CALIFORNIA

BAR LENGTH ON ORIGINAL DRAWING EQUALS ONE INCH. ADJUST SCALE ACCORDINGLY

NO.	DATE	REVISION	BY

SONOMA COUNTY WATER AGENCY

SCALE: AS SHOWN
DATE: 06-06-11
DRAWN: JLW/SMP
REVIEWED:

SERVICE CENTER RELOCATION (2025 AVIATION BOULEVARD)
NEW SERVICE CENTER FLOOR PLAN

FILE NAME: ALW_FleetCenter_Floorplan.dwg
CONTRACT NUMBER: 0-706-7 #01
DRAWING NUMBER: A-1
SHEET 10 OF 64

\\Sd-data\proj\general\all Facilities\office-sites\7449_Fleet_ALW-TP\ALW_FleetCenter_Floorplan.dwg

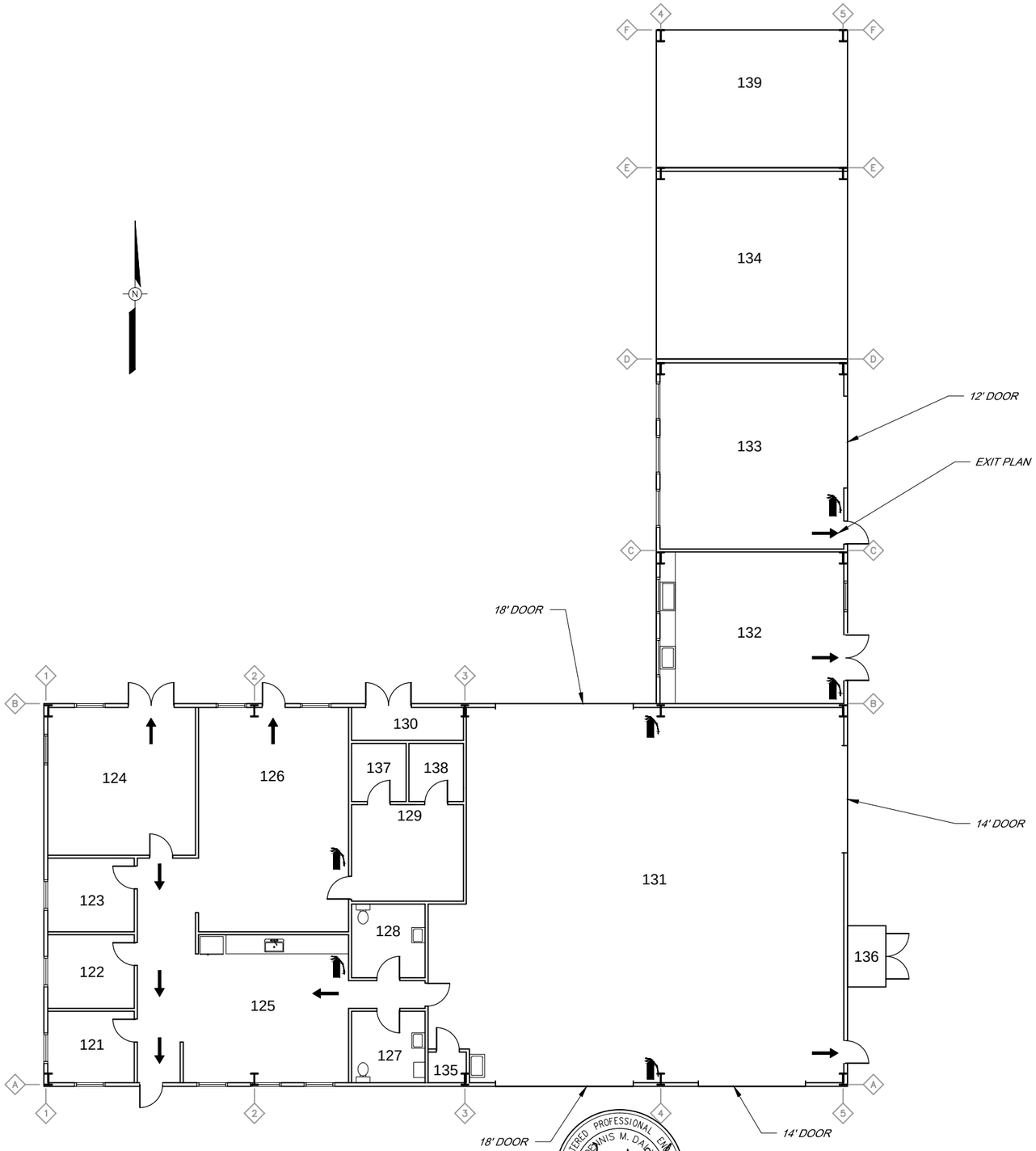

PLAN VIEW
SCALE: 1/8" = 1'-0"

LEGEND

DENOTES EXIT DIRECTION

FIRE EXTINGUISHER (6)

62 NUMBER OF OCCUPANTS

BAR LENGTH ON ORIGINAL DRAWING EQUALS ONE INCH. ADJUST SCALE ACCORDINGLY

REGISTERED PROFESSIONAL ENGINEER DENNIS M. DALY No. 32947 CIVIL STATE OF CALIFORNIA

NO.	DATE	REVISION	BY

SONOMA COUNTY WATER AGENCY

SCALE: AS SHOWN
DATE: 06-06-11
DRAWN: SMP
REVIEWED:

SERVICE CENTER RELOCATION (2025 AVIATION BOULEVARD)

EXIT PLAN AND FIRE EXTINGUISHER LOCATION

FILE NAME: 7449_ExitPlan.dwg
CONTRACT NUMBER: 0-706-7 #01
DRAWING NUMBER: A-2
SHEET 11 OF 64

\\Sd-data\proj\general\all Facilities\office-sites\7449_Fleet_ALW-TP\7449_ExitPlan.dwg

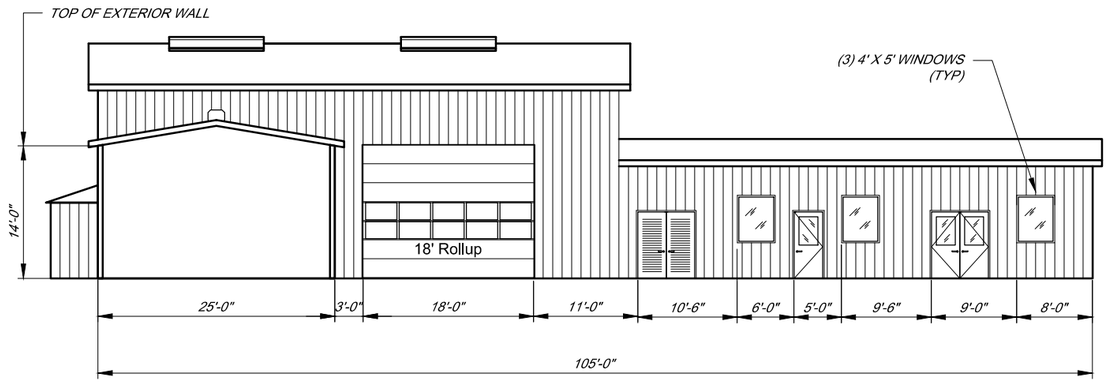

NORTH ELEVATION
SCALE: 1/8" = 1'-0"

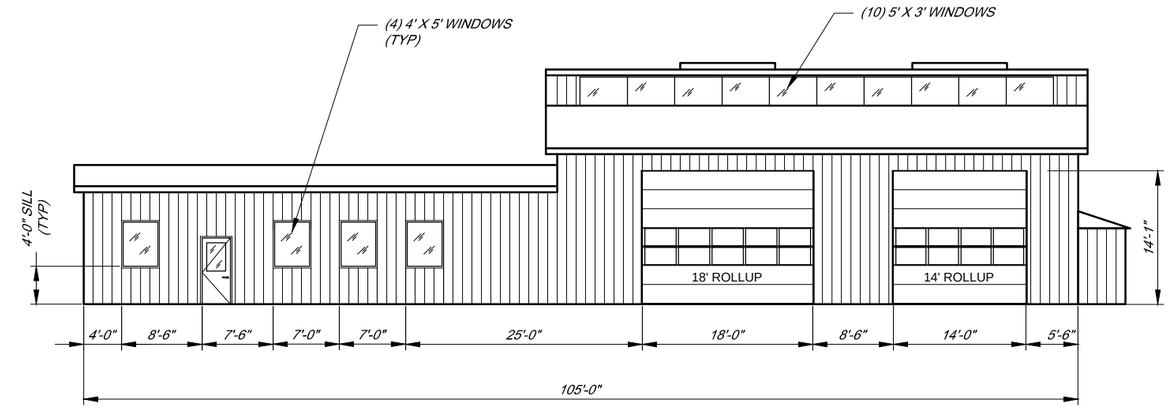

SOUTH ELEVATION
SCALE: 1/8" = 1'-0"

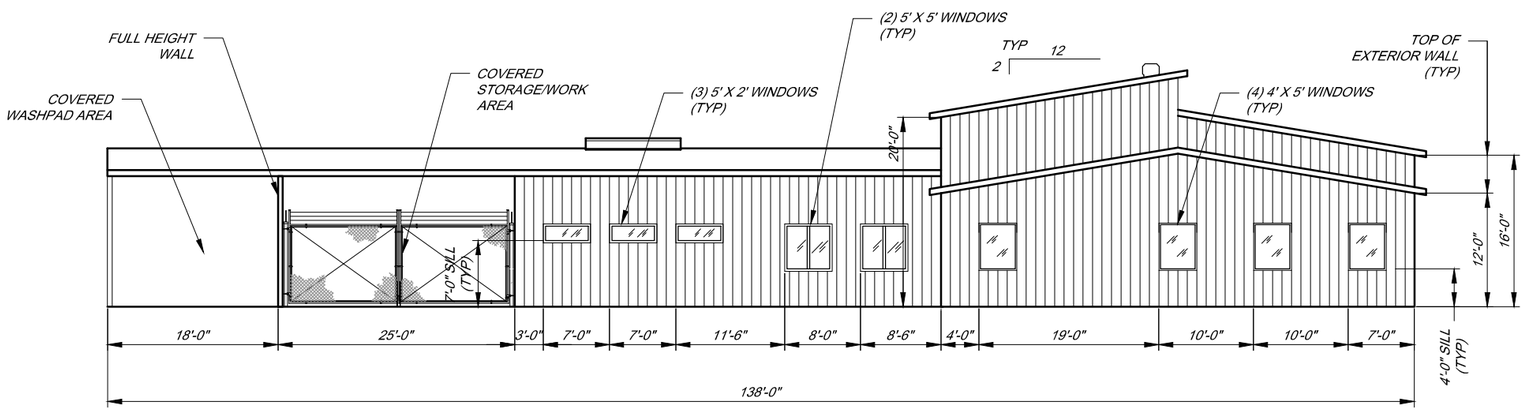

WEST ELEVATION
SCALE: 1/8" = 1'-0"

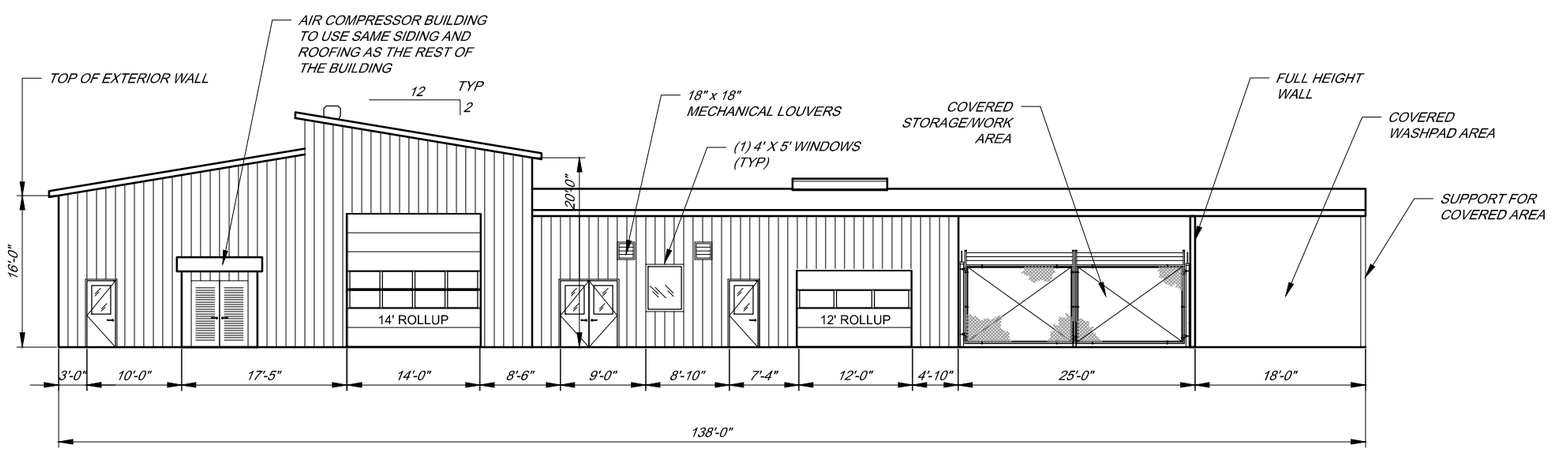

EAST ELEVATION
SCALE: 1/8" = 1'-0"

NOTE

1. FOR DOOR AND WINDOW SCHEDULE SEE SHEET A-7
2. CLOSED WALL AT BUILDING LINE "E".

REGISTERED PROFESSIONAL ENGINEER
DENNIS M. DAILY
No. 32947
CIVIL
STATE OF CALIFORNIA

BAR LENGTH ON ORIGINAL DRAWING EQUALS ONE INCH. ADJUST SCALE ACCORDINGLY

NO.	DATE	REVISION	BY

SONOMA COUNTY WATER AGENCY

SCALE : 1" = 10'
DATE : 06-06-11
DRAWN : SMP
REVIEWED :

SERVICE CENTER RELOCATION (2025 AVIATION BOULEVARD)

NEW SERVICE CENTER ELEVATIONS

FILE NAME: 7449_FleetCenter_ExtElev.dwg
CONTRACT NUMBER: 0-706-7 #01
DRAWING NUMBER: A-3
SHEET 12 OF 64

\\Sd-data\proj\general\all Facilities\office-sites\7449_Fleet_ALW-TP\7449_FleetCenter_ExtElev.dwg

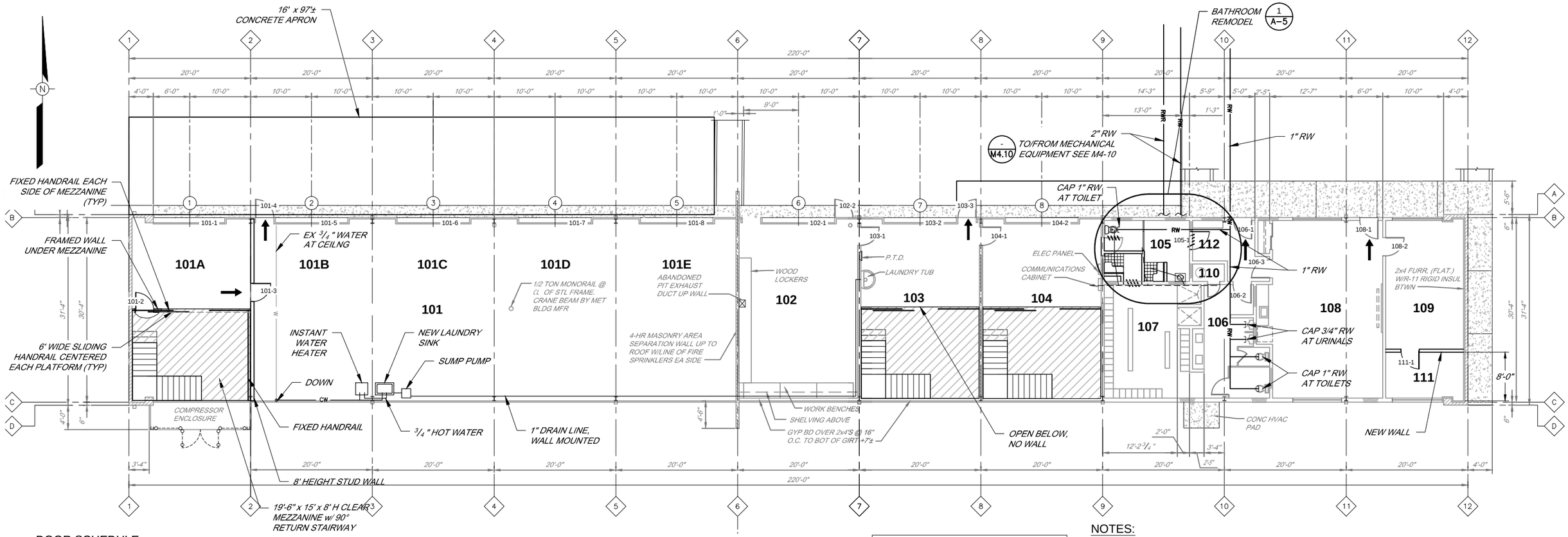

PLAN VIEW
SCALE: 1/8" = 1'-0"

DOOR SCHEDULE

Room #	Door #	Width	Height	Type	Finish	Hardware Group
101	101-1	12'	14'	GD	Pre-Finish	Note 2
101	101-2	3'	7'	M/PH	Pre-Finish	Group 3
101	101-3	3'	7'	M/PH	Pre-Finish	Group 3
101	101-4			Existing Door	Note 4	Group 3
101	101-5	12'	14'	GD	Pre-Finish	Note 2
101	101-6	12'	14'	GD	Pre-Finish	Note 2
101	101-7	12'	14'	GD	Pre-Finish	Note 2
101	101-8	12'	14'	GD	Pre-Finish	Note 2
102	102-1			Not in Contract		
102	102-2			Existing Door	Note 4	Group 3
103	103-1			Existing Door	Note 4	Group 3
103	103-2			Not in Contract		
103	103-3			Existing Door	Note 4	Group 3
104	104-1			Existing Door	Note 4	Group 1
104	104-2			Not in Contract		
105	105-1	3'	7'	M/PH	Paint	Group 7
106	106-1			Existing Door	Note 4	Group 3
106	106-2			Existing Door	Note 4	Group 1
106	106-3			Existing Door	Note 4	Group 1
108	108-1			Existing Door	Note 4	Group 3
108	108-2			Existing Door	Note 4	Group 1
111	111-1	3'	7'	M/PH	Paint	Group 1

DOOR LEGEND

M	Metal
PH	Pre-hung door
W	Wood
GD	Commercial Garage Door (glass paneled similar to new building garage doors)
Paint	General paint color Benjamin Moore #2142-60 November Rain, Paint glossy sheen

DOOR NOTES

1. All doors to be hung with swing as shown on drawing
2. See specifications
3. Field Verify overhead door sizing
4. Existing door to remain. Change out Hardware

FINISH SCHEDULE

Room #	Floor	Ceiling	N-Wall	S-Wall	E-Wall	W-Wall	GA-214 ***	Ceiling
101	Existing	UNF	GYP/P1**	GYP/P1**	Existing Block	Existing Block	2	15
105	VCT	GYP/P2	GYP/P2/B1	GYP/P2/B1	GYP/P2/B1	GYP/P2/B1	5	8
106	Existing	Existing	Existing/P1	Existing/P1	Existing/P1	Existing/P1	3	8
107	Existing	Existing	Existing/P1	Existing/P1	Existing/P1	Existing/P1	3	8
108	Existing	Existing	Existing/P1	Existing/P1	Existing/P1	Existing/P1	3	8
109	Existing	Existing	Existing/P1	GYP/P1/B1	Existing/P1	Existing/P1	3	8
110	Existing	Existing	Existing/P1	Existing/P1	Existing/P1	Existing/P1	3	8
111	Existing	Existing	GYP/P1/B1	Existing/P1	Existing/P1	Existing/P1	3	8
112	Existing	Existing	Existing/P1	Existing/P1	Existing/P1	Existing/P1	3	8

* Reference fire wall detail 3 on sheet A13. Wall and gyp to extend full height to roof.
** Wall and gyp to extend full height to roof soffit.
*** All walls with finish level of 3 to be textured.

FINISH LEGEND

P1	Paint 1: General Paint Color Benjamin Moore #2142-60 November Rain, Paint Paint 2: Eggshell Sheen Typical Throughout
P2	Paint 2: Benjamin Moore #2129-50 Winter Lake, Paint Eggshell Sheen Typical Throughout
GYP	Gypsumboard
B1	Wallbase: Burke Burkebase Rubber Wall Base - Color 208, Light Grey 4" H Coved base @ hard floor surface
TS	Transition Strip, wherever necessary between two different types of flooring.
VCT	Vinyl Tile: Mannington commercial Essentials Vinyl Composition Tile, color 141 "cool white", size 12" x12", gauge 1/8"

FINISH NOTES

1. FLOOR AND CEILING, PATCH TO MATCH EXISTING.
2. CERAMIC TILE, PATCH TO MATCH EXISTING.
3. EXISTING WALLS TO BE PATCHED AS REQUIRED AND PAINTED.
4. ROOM 105 REMOVE EXISTING GYPSUM.

ROOM KEY

ROOM No	DESCRIPTION
101	FLEET
102	FISHERIES SUPPLY
103	SMP STORAGE
104	SMP STORAGE
105	WOMEN'S RESTROOM/LOCKER
106	MEN'S RESTROOM
107	MEN'S LOCKERS
108	SMP SUPPLY ROOM
109	SMP SUPPLY ROOM
110	UTILITY CLOSET
111	STORAGE
112	MUD ROOM

REGISTERED PROFESSIONAL ENGINEER
DENNIS M. DACK
No. 37947
CIVIL
STATE OF CALIFORNIA

NOTES:

GENERAL PLUMBING NOTES

1. REPLACE ALL FAUCETS, SINKS, TOILETS, AND URINALS. ONE URINAL TO MEET ADA REQUIREMENTS (SEE DETAIL 12, SHEET A-11).
2. CAP RW AT TOILETS AND URINALS FOR POSSIBLE FUTURE CONNECTION. USE EXISTING CW CONNECTIONS AT TOILET AND URINALS WHERE PRACTICAL.

HANDICAP TOILET (SEE DETAIL 8, SHEET A-11)

3. REPLACE TOILET W/ ADA COMPLIANT
4. REROUTE 4" WASTE LINE TO MAKE ADA COMPLIANT
5. RESET TOILET PAPER HOLDER, SEAT COVER DISPENSER, AND GRAB BAR.

LAVATORY AND COUNTER (SEE DETAIL 10, SHEET A-11)

6. LOWER TO 34" MAX
7. INSULATE TRAP
8. REPLACE FAUCETS W/ ELECTRONICALLY ACTUATED OR MANUAL W/ MIN 10 SEC FLOW
9. REPLACE ALL FAUCETS, SINKS, TOILETS, AND URINALS. ONE URINAL TO MEET ADA REQUIREMENTS (SEE DETAIL 12, A-11).

GENERAL NOTES

10. REPLACE ALL OVERHEAD DOORS IN ROOMS 101A THRU 101E PER SPECS
11. INSULATE ROOM 101 WITH R-19 WALLS AND CEILING
12. ALL WORK TO MEET CURRENT ADA STANDARDS

LEGEND

→ DENOTES EXIT DIRECTION

HARDWARE SCHEDULE

Group 1	Passage, Hinge, Closure
Group 2	N/A
Group 3	Lockset, Hinge, Closure, Seal
Group 4	Lockset, Hinge, Closure, Smoke Seal
Group 5	N/A
Group 6	N/A
Group 7	Pushbutton Latch Set, Hinge, Closure
Group 8	Inside Panic Hardware (Exit Door), Lockset, Hinge, Closure, Seal

NO.	DATE	REVISION	BY

SONOMA COUNTY WATER AGENCY

SCALE: AS SHOWN
DATE: 06-06-11
DRAWN: SMP
REVIEWED:

SERVICE CENTER RELOCATION (2025 AVIATION BOULEVARD)

EXISTING SERVICE CENTER FLOOR PLAN, FINISH SCHEDULE, AND WEST PLUMBING PLAN

FILE NAME: ALW_WOD-Bldg_Floorplan.dwg
CONTRACT NUMBER: 0-706-7 #01
DRAWING NUMBER: A-4

\\Sd-data\proj\general\all Facilities\office-sites\7449_Fleet_ALW-TP\ALW_WOD-Bldg_Floorplan.dwg

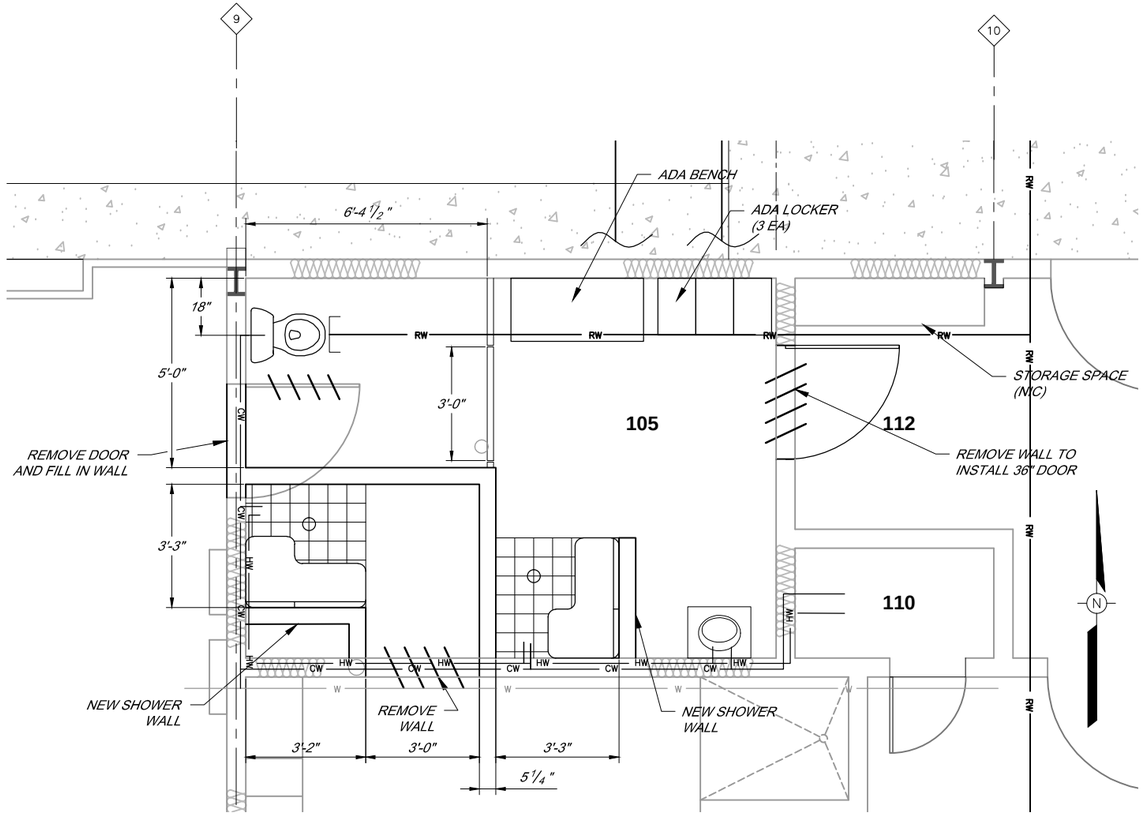

PLAN VIEW (1 / A–4)
SCALE: 1/2" = 1'-0"

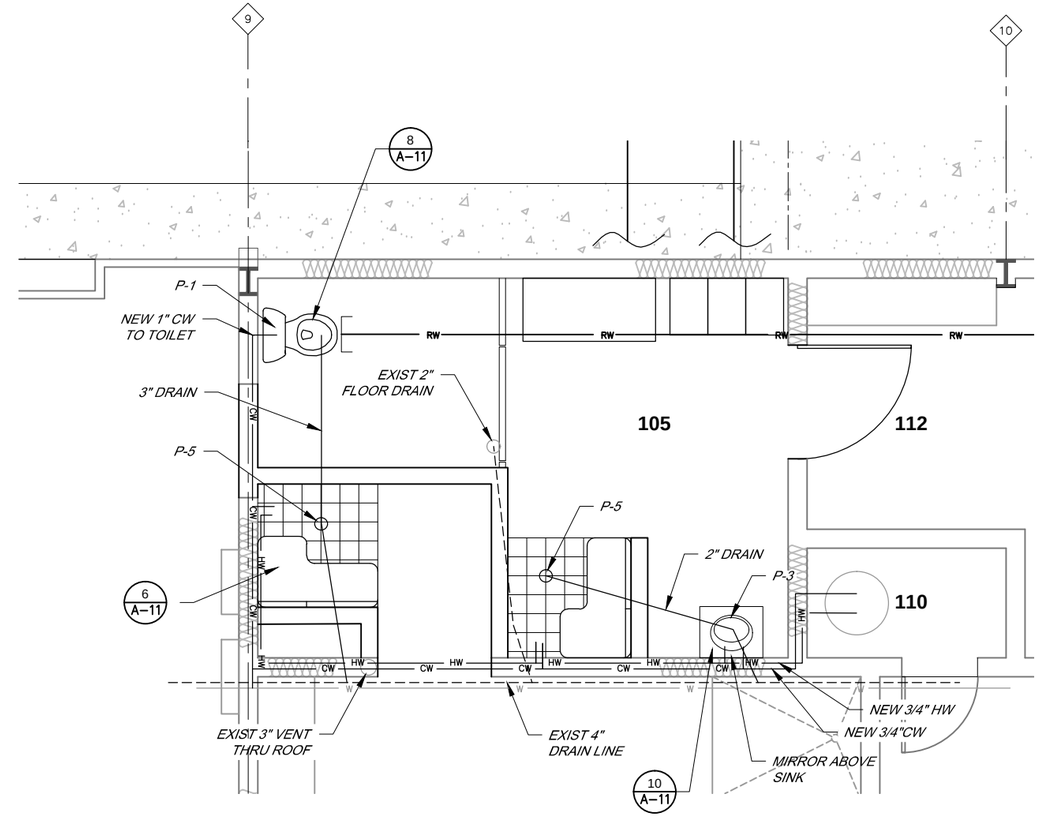

WATER SUPPLY, DRAINS, AND WASTE VENT
SCALE: 1/2" = 1'-0"

NOTE

1. ALL WORK TO MEET CURRENT ADA STANDARDS.

PLUMBING TABLE

SYMBOL	DESCRIPTION	VENT	WASTE	COLDWATER	HOTWATER
P-1	TOILET	2"	4"	1"	
P-3	LAVATORY	1.5"	2"	1/2"	1/2"
P-5	SHOWER	1.5"	2"	1/2"	1/2"

REGISTERED PROFESSIONAL ENGINEER
DENNIS M. DALY
No. 32947
CIVIL
STATE OF CALIFORNIA

NO.	DATE	REVISION	BY

SONOMA COUNTY WATER AGENCY

SCALE: AS SHOWN
DATE: 06-06-11
DRAWN: SMP
REVIEWED:

SERVICE CENTER RELOCATION (2025 AVIATION BOULEVARD)

EXISTING SERVICE CENTER MISC DETAILS AND PLUMBING

FILE NAME: ALW_WOD-Bldg_Floorplan.dwg
CONTRACT NUMBER: 0-706-7 #01
DRAWING NUMBER: A-5
SHEET 14 OF 64

\\Sd-data\proj\general\all Facilities\office-sites\7449_Fleet_ALW-TP\ALW_WOD-Bldg_Floorplan.dwg

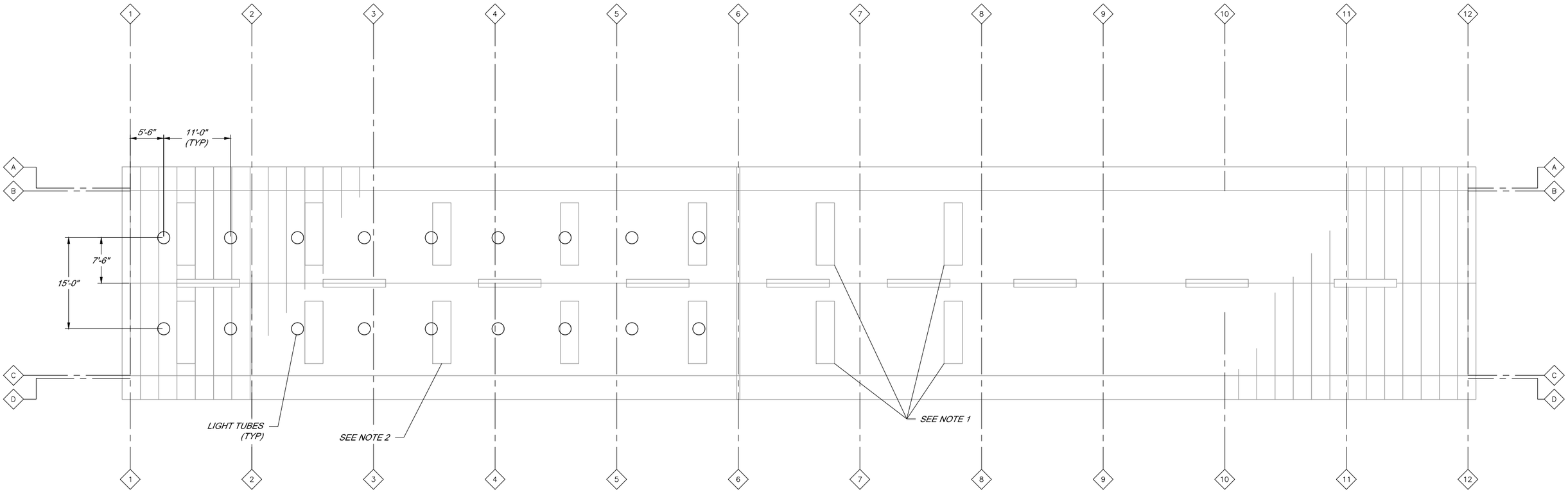

PLAN VIEW
SCALE: 1/8" = 1'-0"

NOTE

1. COVER WITH METAL ROOF SKYLIGHT SCREENS MEETING CAL OSHA AMENDED SECTION 3212 REQUIREMENTS.
2. REPLACE FIBERGLASS ROOF PANELS BETWEEN GRID LINES 1 AND 6 WITH SOLID METAL ROOFING PANELS TO MATCH EXISTING ROOFING COLOR AND GAUGE.

REGISTERED PROFESSIONAL ENGINEER
DENNIS M. DAGY
No. 32967
CIVIL
STATE OF CALIFORNIA

NO.	DATE	REVISION	BY

SONOMA COUNTY WATER AGENCY

SCALE: AS SHOWN
DATE: 06-06-11
DRAWN: SMP
REVIEWED:

SERVICE CENTER RELOCATION (2025 AVIATION BOULEVARD)

EXISTING SERVICE CENTER ROOF PLAN

FILE NAME: ALW_WOD-Bldg_Roofplan.dwg
CONTRACT NUMBER: 0-706-7 #01
DRAWING NUMBER: A-6

\\Sd-data\proj\general\all Facilities\office-sites\7449_Fleet_ALW-TP\ALW_WOD-Bldg_Roofplan.dwg

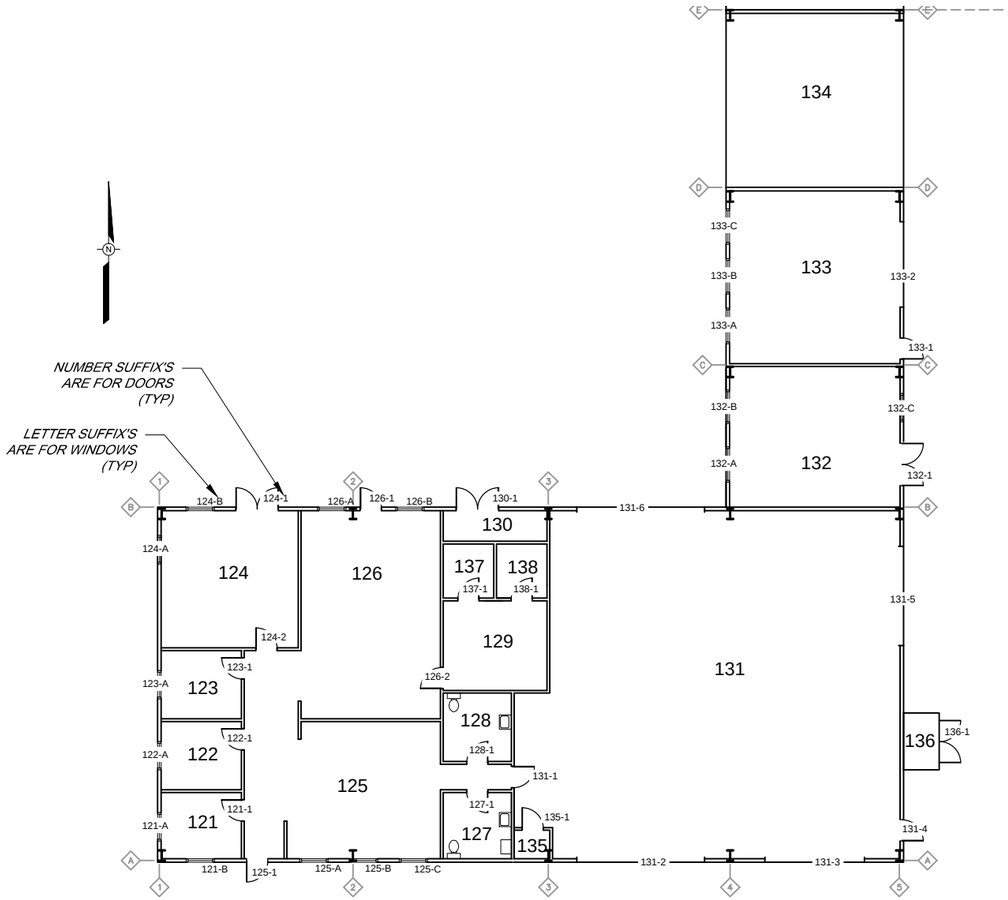

PLAN VIEW
SCALE: 3/32" = 1'-0"

DOOR SCHEDULE

Room #	Door #	Width	Height	Type	Hardware Group
121	121-1	3'	7'	M/PH/FG	Group 3
122	122-1	3'	7'	M/PH/FG	Group 3
123	123-1	3'	7'	M/PH/FG	Group 3
124	124-1	6'	7'	M/PR/HG	Group 8
124	124-2	3'	7'	M/PH	Group 3
125	125-1	3'	7'	M/PH/HG	Group 8
126	126-1	3'	7'	M/PH/HG	Group 3
126	126-2	3'	7'	M/PH/FG	Group 8
127	127-1	3'	7'	M/PH	Group 7
128	128-1	3'	7'	M/PH/FL	Group 7
130	130-1	6'	7'	M/PH/PR	Group 3
131	131-1	3'	7'	M/PH/3hr	Group 4
131	131-2	18' 2"	14' 1"	GD	
131	131-3	14' 2"	14' 1"	GD	
131	131-4	3'	7'	M/PH/HG	Group 3
131	131-5	14' 2"	14' 1"	GD	
131	131-6	18' 2"	14' 1"	GD	
132	132-1	6'	7'	M/PH/PR/HG	Group 8
133	133-1	3'	7'	M/PH/HG	Group 3
133	133-2	12'	8'	GD	
135	135-1	3'	7'	M/PH	Group 1
136	136-1	6'	7'	M/PH/PR/FL	Group 3
137	137-1	3'	7'	M/PH	Group 1
138	138-1	3'	7'	M/PH	Group 1

DOOR LEGEND

M	Metal
PH	Pre-hung door
W	Wood
HG	Half glass
FG	Full glass
PR	Pair (double-door)
FL	Full louver
GD	Commercial Garage Door (glass paneled as shown in building elevations)
Paint	General paint color Benjamin Moore #2142-60 November Rain, Paint glossy sheen

HARDWARE SCHEDULE

Group 1	Passage, Hinge, Closure
Group 2	N/A
Group 3	Lockset, Hinge, Closure, Seal
Group 4	Lockset, Hinge, Closure, Smoke Seal
Group 5	N/A
Group 6	N/A
Group 7	Pushbutton Latch Set, Hinge, Closure
Group 8	Inside Panic Hardware (Exit Door), Lockset, Hinge, Closure, Seal

WINDOW SCHEDULE

Room #	Window #	Type/NOTE	U-factor	SHGC	Frame
121	121-A	A	≤0.32	≤0.40	AL/BA
	121-B	A	≤0.32	≤0.40	AL/BA
122	122-A	A	≤0.32	≤0.40	AL/BA
123	123-A	A	≤0.32	≤0.40	AL/BA
124	124-A	A	≤0.32	≤0.40	AL/BA
	124-B	A	≤0.32	≤0.40	AL/BA
125	125-A	A	≤0.32	≤0.40	AL/BA
	125-B	A	≤0.32	≤0.40	AL/BA
	125-C	A	≤0.32	≤0.40	AL/BA
126	126-A	A	≤0.32	≤0.40	AL/BA
	126-B	A	≤0.32	≤0.40	AL/BA
131	(upper 10 windows)	A	≤0.32	≤0.40	AL/BA
132	132-A	B	≤0.32	≤0.40	AL/BA
	132-B	B	≤0.32	≤0.40	AL/BA
	132-C	A	≤0.32	≤0.40	AL/BA
133	133-A	A	≤0.32	≤0.40	AL/BA
	133-B	A	≤0.32	≤0.40	AL/BA
	133-C	A	≤0.32	≤0.40	AL/BA

WINDOW NOTES

1. All windows to be sized in accordance with Sheet A-2
2. Type A: Fixed Window
3. Type B: Horizontal Rolling Window
4. All windows shall be Energy Star Certified
5: SHGC - Solar Heat Gain Coefficient

AL = Aluminum
BA = Bronze Anodized

FINISH SCHEDULE

Room #	Floor	Ceiling	N-Wall	S-Wall	E-Wall	W-Wall	GA-214 finish***	Ceiling Height
121	RF	ACT	GYP/P1/B1	GYP/P1/B1	GYP/P1/B1	GYP/P1/B1	3	10
122	RF	ACT	GYP/P1/B1	GYP/P1/B1	GYP/P1/B1	GYP/P1/B1	3	10
123	RF	ACT	GYP/P1/B1	GYP/P1/B1	GYP/P1/B1	GYP/P1/B1	3	10
124	RF	ACT	GYP/P1/B1	GYP/P1/B1	GYP/P1/B1	GYP/P1/B1	3	10
125	RF	ACT	GYP/P1/B1	GYP/P1/B1	GYP/P1/B1	GYP/P1/B1	5	10
126	RF	ACT	GYP/P1/B1	GYP/P1/B1	GYP/P1/B1	GYP/P1/B1	3	10
127	VCT	GYP/P1	GYP/P2/B1	GYP/P2/B1	GYP/P2/B1*	GYP/P2/B1	5	8
128	VCT	GYP/P1	GYP/P2/B1	GYP/P2/B1	GYP/P2/B1*	GYP/P2/B1	5	8
129	RF	ACT	GYP/P1/B1	GYP/P1/B1	GYP/P1/B1*	GYP/P1/B1	3	10
130	SC	GYP/P1	GYP/P2/B1	GYP/P2/B1	GYP/P2/B1*	GYP/P2/B1	2	10
131	SC	UNF	GYP/P1*	GYP/P1**	GYP/P1	GYP/P1*	3	Varies
132	SC	UNF	GYP/P1/B1**	GYP/P1/B1*	GYP/P1/B1	GYP/P1/B1	3	Varies
133	SC	UNF	GYP/P1**	GYP/P1**	GYP/P1	GYP/P1	3	Varies
134	UNF	UNF	UNF	UNF	NA	NA	3	Varies
135	SC	UNF	GYP/P1	GYP/P1	GYP/P1	GYP/P1	2	Varies
136	SC	UNF	GYP/P1	GYP/P1	GYP/P1	GYP/P1	2	8
137	RF	ACT	GYP/P1/B1	GYP/P1/B1	GYP/P1/B1	GYP/P1/B1	3	10
138	RF	ACT	GYP/P1/B1	GYP/P1/B1	GYP/P1/B1*	GYP/P1/B1	3	10

* Reference fire wall detail 3 on sheet A13. Wall and gyp to extend full height to roof.
** Wall and gyp to extend full height to roof soffit.
*** All walls with finish level of 3 to be textured.

FINISH LEGEND

RF	Rubber flooring: Norament luxor, color 4900
SC	Sealed Concrete, Coating: Buckeye, Proclaim
VCT	Vinyl Tile: Mannington Commercial Essentials Vinyl Composition Tile, color 141 "cool white", size 12" x 12", gauge: 1/8"
P1	Paint 1: General Paint Color Benjamin Moore #2142-60 November Rain, Paint Paint 2: Eggshell Sheen Typical Throughout
P2	Paint 2: Benjamin Moore #2129-50 Winter Lake, Paint Eggshell Sheen Typical Throughout
P3	Paint 3: Benjamin Moore #2149-50 Mellowed Ivory, Paint Eggshell Sheen Typical Throughout
UNF	Unfinished
ACT	Accoustical Ceiling Tile
GYP	Gypsumboard
B1	Wallbase: Burke Burkebase Rubber Wall Base - Color 208, Light Grey 4" H Coved base @ hard floor surface
TS	Transition Strip, wherever necessary between two different types of flooring.
NA	Not Applicable

REGISTERED PROFESSIONAL ENGINEER
DENNIS M. DAGG
No. 32947
CIVIL
STATE OF CALIFORNIA

BAR LENGTH ON ORIGINAL DRAWING EQUALS ONE INCH. ADJUST SCALE ACCORDINGLY

NO.	DATE	REVISION	BY

SONOMA COUNTY WATER AGENCY

SCALE: AS SHOWN
DATE: 06-06-11
DRAWN: SMP
REVIEWED:

SERVICE CENTER RELOCATION (2025 AVIATION BOULEVARD)
FINISH SCHEDULE

FILE NAME: 7449_Schedule.dwg
CONTRACT NUMBER: 0-706-7 #01
DRAWING NUMBER: A-7
SHEET 16 OF 64

\\Sd-data\proj\general\all Facilities\office-sites\7449_Fleet_ALW-TP\7449_Schedule.dwg

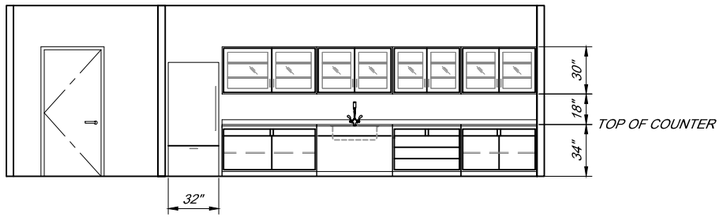

Room 125 - LUNCH ROOM - LOOKING NORTH

Room 132 - FISHERIES - LOOKING WEST

NOTE

1. PROVIDE ADA CLEAR SPACE UNDER SINK.

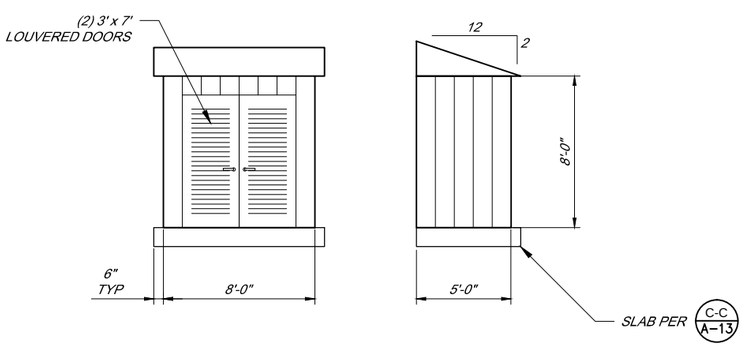

AIR COMPRESSOR BUILDING 1 / C-1

NOTE

1. AIR COMPRESSOR BY OTHERS

BAR LENGTH ON ORIGINAL DRAWING EQUALS ONE INCH. ADJUST SCALE ACCORDINGLY

REGISTERED PROFESSIONAL ENGINEER DENNIS M. DALY No. 32967 CIVIL STATE OF CALIFORNIA

NO.	DATE	REVISION	BY

SONOMA COUNTY WATER AGENCY

SCALE: NTS
DATE: 06-06-11
DRAWN: SMP
REVIEWED:

SERVICE CENTER RELOCATION (2025 AVIATION BOULEVARD)

INTERIOR AND EXTERIOR BUILDING ELEVATION DETAILS

FILE NAME: 7449_InterAndExterElevations.dwg
CONTRACT NUMBER: 0-706-7 #01
DRAWING NUMBER: A-8
SHEET 17 OF 64

\\Sd-data\proj\general\all Facilities\office-sites\7449_Fleet_ALW-TP\7449_InterAndExterElevations.dwg

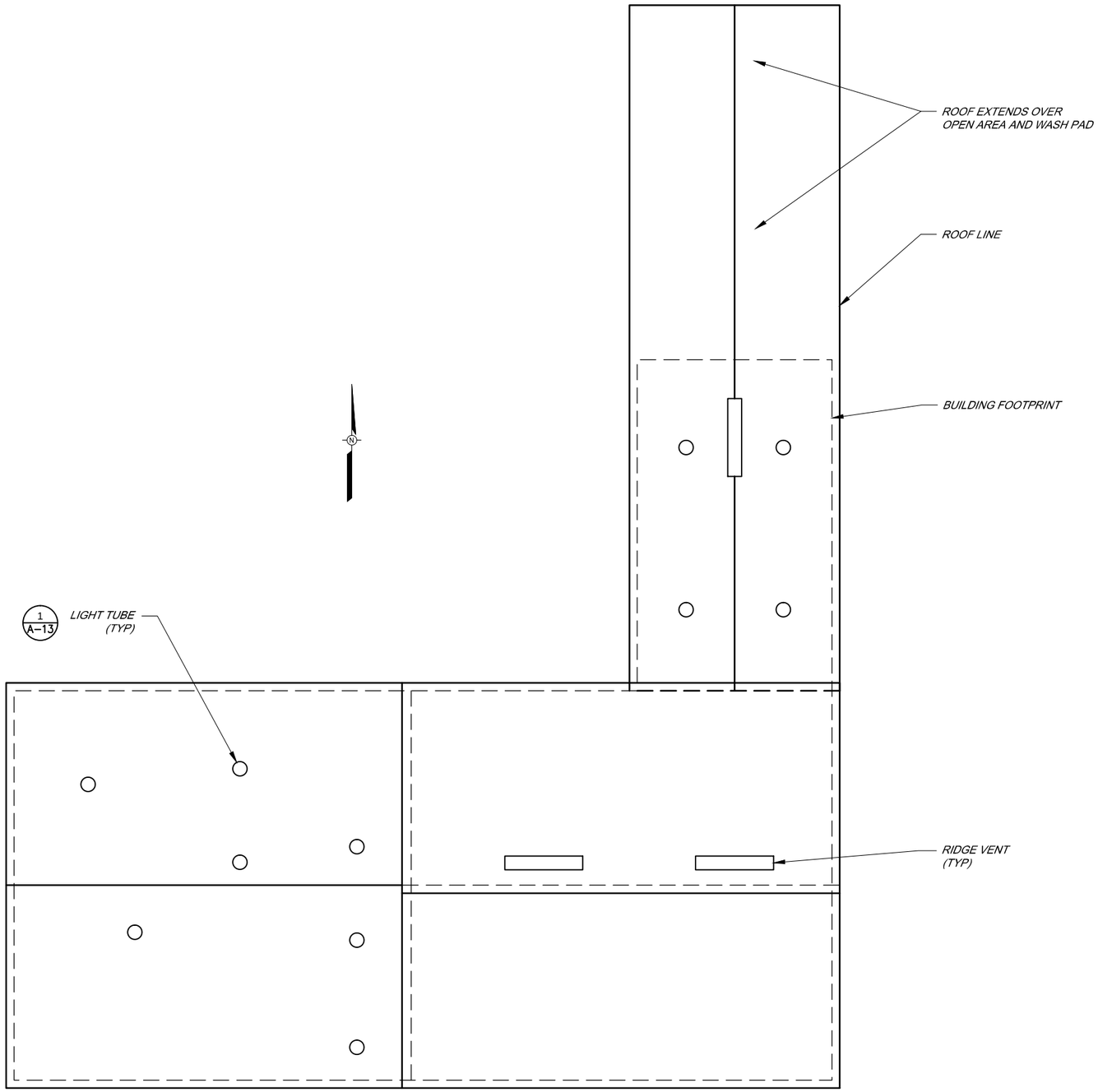

ROOF PLAN
SCALE: 1/8" = 1'-0"

NOTE

1. GUTTER DOWNDRAINING AT 50' +/- SPACING. DRAIN THRU CURB FACE AS APPLICABLE.

REGISTERED PROFESSIONAL ENGINEER
DENNIS M. DALY
No. 32947
CIVIL
STATE OF CALIFORNIA

BAR LENGTH ON ORIGINAL DRAWING EQUALS ONE INCH. ADJUST SCALE ACCORDINGLY

NO.	DATE	REVISION	BY

SONOMA COUNTY WATER AGENCY

SCALE: AS SHOWN
DATE: 06-06-11
DRAWN: SMP
REVIEWED:

SERVICE CENTER RELOCATION (2025 AVIATION BOULEVARD)
ROOF PLAN

FILE NAME: 7449_RoofPlan.dwg
CONTRACT NUMBER: 0-706-7 #01
DRAWING NUMBER: A-9
SHEET 18 OF 64

\\Sd-data\proj\general\all Facilities\office-sites\7449_Fleet_ALW-TP\7449_RoofPlan.dwg

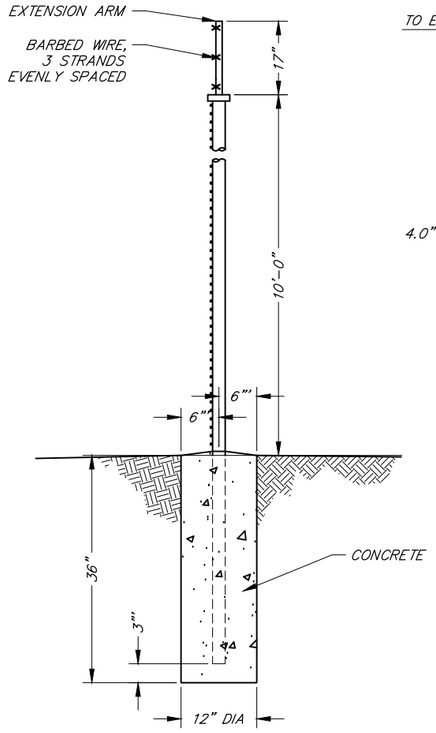

TYPICAL FENCE SECTION

NTS

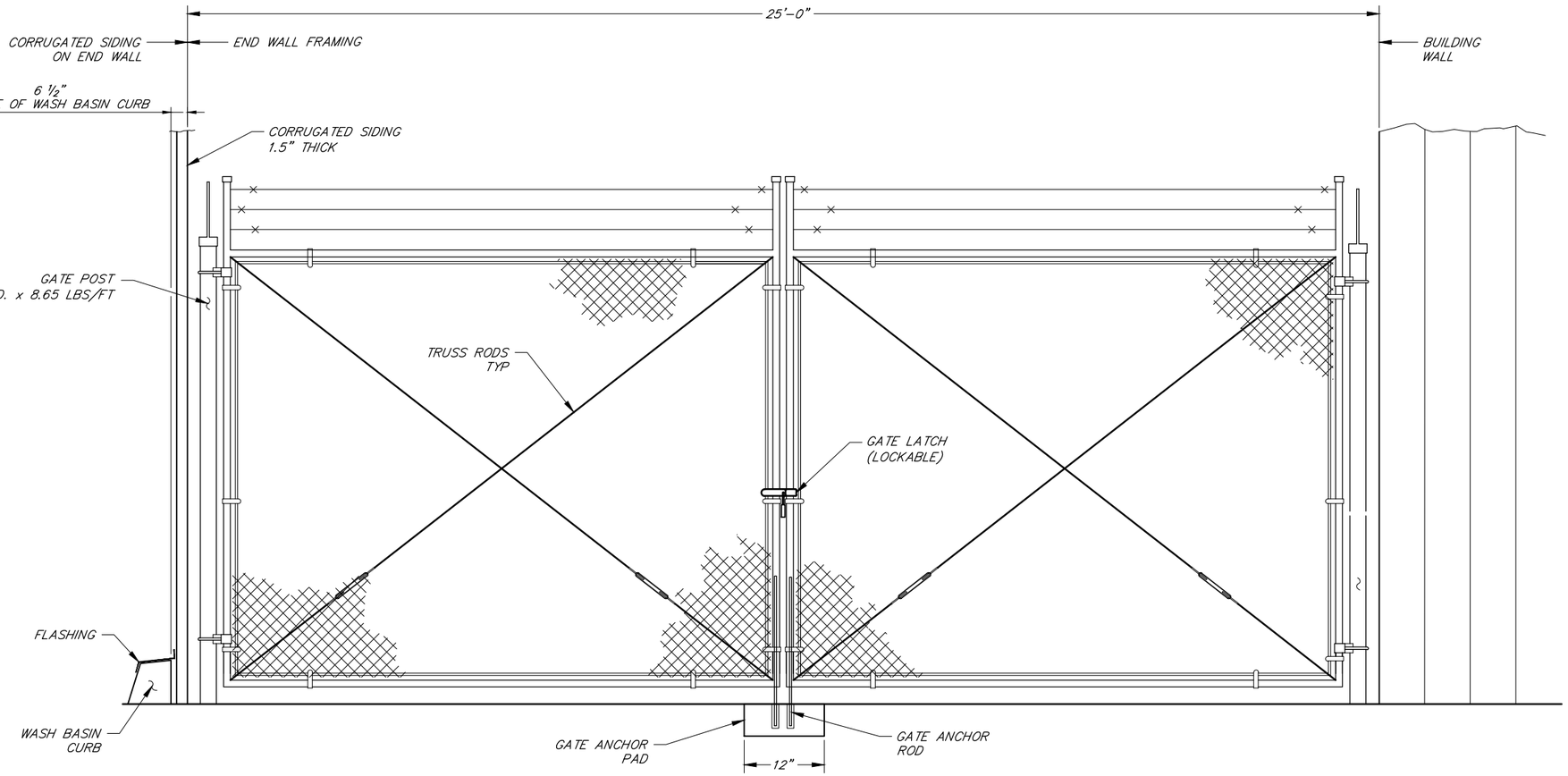

25' DOUBLE DRIVE GATE

NTS

2
–

BAR LENGTH ON ORIGINAL DRAWING EQUALS ONE INCH. ADJUST SCALE ACCORDINGLY

BAR LENGTH ON ORIGINAL DRAWING EQUALS ONE INCH. ADJUST SCALE ACCORDINGLY

REGISTERED PROFESSIONAL ENGINEER
DENNIS M. DALY
No. 32947
CIVIL
STATE OF CALIFORNIA

NO.	DATE	REVISION	BY

SONOMA COUNTY WATER AGENCY

SCALE : AS SHOWN
DATE : 06-06-11
DRAWN : SMP
REVIEWED :

SERVICE CENTER RELOCATION (2025 AVIATION BOULEVARD)

GATE DETAILS

FILE NAME: 7449-WireGates.dwg
CONTRACT NUMBER: 0-706-7 #01

DRAWING NUMBER: A-10

SHEET 19 OF 64

\\Sd-data\proj\general\all Facilities\office-sites\7449_Fleet_ALW-TP\7449-WireGates.dwg

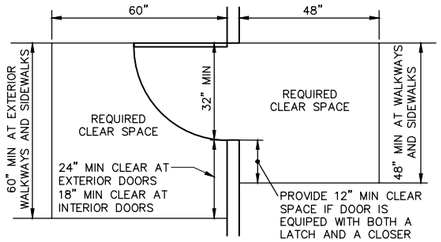

LEVEL FLOOR/LANDING AT DOOR | 1

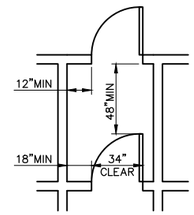

NOTE: DOORS IN A SERIES SHALL SWING EITHER IN THE SAME DIRECTION OR AWAY FROM THE SPACE BETWEEN THE DOORS.

SPACE IS NECESSARY TO ALLOW BACKING AND TURNING FOR A WHEELCHAIR TO CLEAR THE INSWINGING DOOR.

CONSECUTIVE DOOR OPENINGS | 2

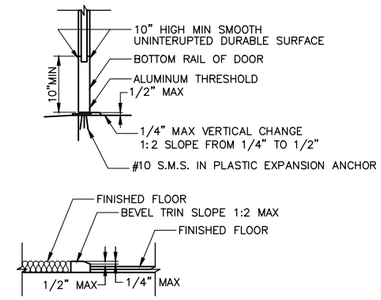

NOTES:
1. CARPETS TO HAVE 1/2" MAX PILE THICKNESS.
2. ENTRY MAT TO BE RECESS MOUNTED OR ANCHORED FLUSH W/ADJACENT FINISHED FLOOR.
3. ENTRY MATT MAX HEIGHT 1/2"

THRESHOLD | 3

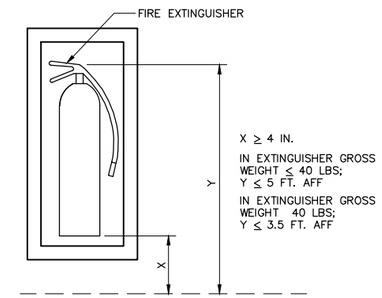

FIRE ESTINGUISHER MOUNTING HEIGHT | 4

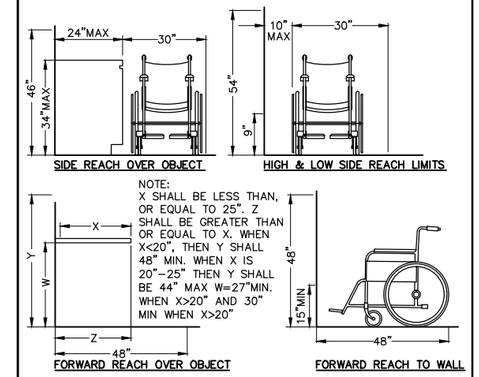

REACH RANGES | 5

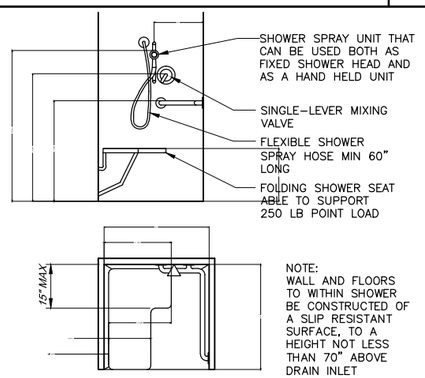

ACCESSIBLE SHOWER | 6

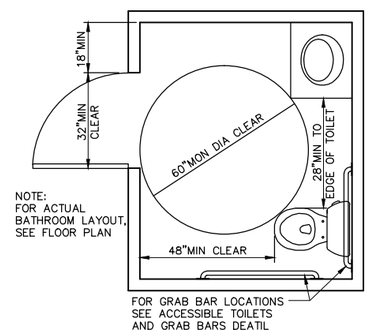

SINGLE ACCOMMODATION TOILET | 7

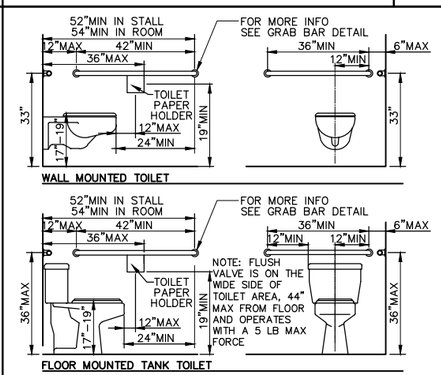

ACCESSIBLE TOILETS & GRAB BARS | 8

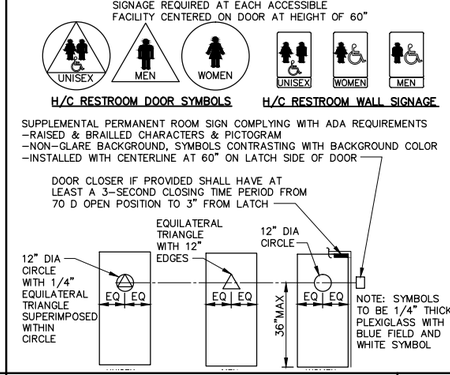

ACCESSIBLE RESTROOM SIGNAGE | 9

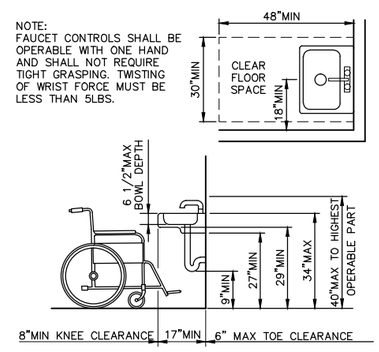

ACCESSIBLE LAVATORY | 10

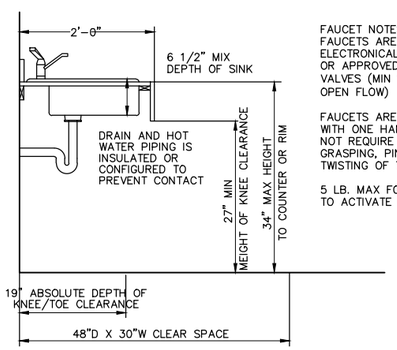

FAUCET NOTES:
FAUCETS ARE LEVER TYPE, ELECTRONICALLY ACTIVATED OR APPROVED SELF CLOSING VALVES (MIN 10 SECOND OPEN FLOW)

FAUCETS ARE OPERABLE WITH ONE HAND AND DO NOT REQUIRE TIGHT GRASPING, PINCHING OR TWISTING OF THE WRIST

5 LB. MAX FORCE REQUIRED TO ACTIVATE CONTROLS

ACCESSIBLE COUNTER AT SINK | 11

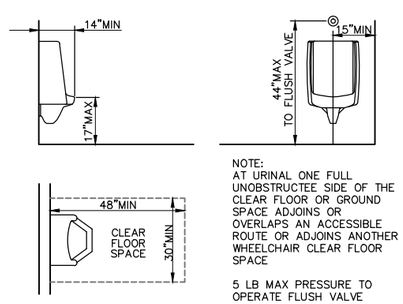

NOTE:
AT URINAL ONE FULL UNOBSTRUCTEE SIDE OF THE CLEAR FLOOR OR GROUND SPACE ADJOINS OR OVERLAPS AN ACCESSIBLE ROUTE OR ADJOINS ANOTHER WHEELCHAIR CLEAR FLOOR SPACE

5 LB MAX PRESSURE TO OPERATE FLUSH VALVE

ACCESSIBLE URINALS | 12

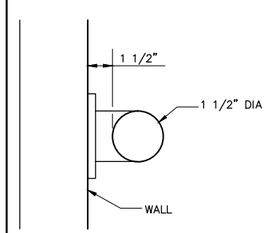

NOTES:
GRAB BARS ARE TO BE A SMOOTH MATERIAL WITH NO SHARP EDGES

MINIMUM STRUCTURAL STRENGTH OF GRAB BARS TO SUPPORT 250 LB POINT LOAD

GRAB BARS DO NOT ROTATE IN THEIR FITTINGS

SURFACE OF WALL ADJACENT TO GRAB BARS IS FREE OF SHARP OBJECTS OR ABRASIVE ELEMENTS

FOR MINIMUM GRAB BAR LENGTH DIMENSIONS AT TOILET SEE FLOOR AND WALL MOUNTED TOILETS AND GRAB BAR DETAIL

ACCESSIBLE GRAB BARS | 13

NOTE: NOT ALL NOTES MAY APPLY TO THIS SHEET

ENTRY WAYS

1. APPLICABLE PRIMARY ENTRANCES TO BUILDINGS ARE TO BE ACCESSIBLE TO THE PHYSICALLY HANDICAPPED. DURING PERIODS OF PARTIAL OR RESTRICTED USE OF A BUILDING OR FACILITY, THE ENTRANCES USED FOR PRIMARY ACCESS SHALL BE ACCESSIBLE TO AND USEABLE BY PHYSICALLY HANDICAPPED PERSONS.

2. RECESSED DOORMATS MUST BE ADEQUATELY ANCHORED TO PREVENT INTERFERENCE WITH WHEELCHAIR TRAFFIC.

ACCESS REQUIREMENTS - DOOR

1. TYPE OF LOCK OR LATCH. EXIT DOORS SHALLOPEN FROM THE INSIDE WITHOUT A KEY. OR ANY SPECIAL KNOWLEDGE OR EFFORT.

2. HAND ACTIVATED DOOR OPENING HARDWARE SHALL BE CENTERED BETWEEN 30 AND 44 INCHES ABOVE THE FLOOR. LATCHING AND LOCKING DOORS THAT ARE HAND ACTIVATED AND IN A PATH OF TRAVEL SHALL BE OPERABLE WITH A SINGLE EFFORT BY LEVER TYPEHARDWARE. PANIC BARS, PUSH-PULL ACTIVATING BARS, OR OTHER HARDWARE THAT PROVIDES PASSAGE WITHOUT GRASPING THE HARDWARE. LOCKED EXIT DOORS SHALL OPERATE IN EGRESS DIRECTION. DOORS TO INDIVIDUAL HOTEL OR MOTEL UNITS MUST OPERATE SIMILARLY.

3. EXIT DOOR HARDWARE SHALL BE AN APPROVED TYPE AND TESTED IN ACCORDANCE WITH THE PROCEDURES ESTABLISHED BY STATE FIRE MARSHALL STANDARDS 332 AND 333.

4. EFFORT TO OPERATE DOORS. MAXIMUM EFFORT TO OPERATE DOORS SHALL NOT EXCEED 5 LBS FOR EXTERIOR DOORS AND 5 LBS FOR INTERIOR DOORS. SUCH PUSH OR PULL EFFORT BEING APPLIED AT RIGHT ANGLES TO HINGED DOORS AND AT THE CENTER PLANE OF SLIDING OR FOLDING DOORS, COMPENSATING DEVICES OR AUTOMATIC DOOR OPERATORS MAY BE UTILIZED TO MEET THE ABOVE STANDARDS. WHEN FIRE DOORS ARE REQUIRED, THE MAXIMUM EFFORT TO OPERATE THE DOOR MAY BE INCREASED NOT TO EXCEED 15 LBS.
5. THE BOTTOM 10 INCHES OF ALL DOORS, EXCEPT AUTOMATIC AND SLIDING DOORS, SHALL HAVE A SMOOTH UNINTERRUPTED SURFACE TO ALLOW THE DOOR TO BE OPENED BY A WHEELCHAIR FOOTREST WITHOUT CREATING A TRAP OR HAZARDOUS CONDITION.
6. DOOR SIZE. EVERY REQUIRED DOORWAY SHALL BE OF A SIZE AS TO PERMIT THE INSTALLATION OF A DOOR NOT LESS THEN 2'-10" IN WIDTH AND NOT LESS THAN 6 FEET, 8 INCHES IN HEIGHT. ALL DOORS SHALL BE CAPABLE OF OPENING AT LEAST 90 DEGREES AND SHALL BE SO MOUNTED THAT THE CLEAR WIDTH OF THE EXIT WAY IS NOT LESS THAN 32 INCHES.

ACCESS REQUIREMENTS - DOOR CONTINUED

7. PAIR OF DOORS. WHERE A PAIR OF DOORS IS UTILIZED AT LEAST ONE OF THE DOORS SHALL PROVIDE A CLEAR UNOBSTRUCTED OPENING WIDTH OF 34 INCHES WITH THE LEAF POSITIONED AT AN ANGLE OF 90 DEGREES FROM ITS CLOSED POSITION.

8. AUTOMATIC DOORS. WHEN AN AUTOMATIC DOOR OPERATOR IS UTILIZED TO OPERATE A PAIR OF DOORS, AT LEAST ONE OF THE DOORS SHALL PROVIDE A CLEAR UNOBSTRUCTED OPENING WIDTH OF 34 INCHES WITH THE DOOR POSITIONED AT AN ANGLE OF 90 DEGREES FROM ITS CLOSED POSITION.

SITE ACCESSIBILITY

1. SITE DEVELOPMENT AND GRADING HAS BEEN DESIGNED TO PROVIDE ACCESS TO ENTRANCES AND EXTERIOR GROUND FLOOR EXITS AND ACCESS TO NORMAL PATHS OF TRAVEL AND WHERE NECESSARY TO PROVIDE ACCESS SHALL INCORPORATE PEDESTRIAN RAMPS, CURB RAMPS, ETC.

ACCESSORIES IN SANITARY FACILITIES

1. MIRRORS ARE MOUNTED WITH THE BOTTOM EDGE NO HIGHER THAN 40" FROM THE FLOOR.
2. OPERABLE PARTS (INCLUDING COIN SLOTS) OF ALL FIXTURES OR ACCESSORIES ARE LOCATED A MAXIMUM OF 40: ABOVE FLOOR (I.E., SOAP DISPENSERS, TOWELS, TOILET SEAT COVERS, AUTO-DRYERS, SANITARY NAPKIN DISPENSERS, WASTE RECEPTACLES, ETC.). CONTROLS AND OPERATING MECHANISMS ARE OPERABLE WITH ONE HAND AND DO NOT REQUIRE TIGHT GRASPING, PINCHING, OR TWISTING OF THE WRIST. OPERATING FORCE IS 5 LB MAXIMUM.
3. COAT HOOKS AND SHELVING ARE LOCATED WITHIN APPROPRIATE REACH RANGES, 48" MAXIMUM ABOVE FLOOR RECOMMENDED.
4. IF MEDICINE CABINETS ARE PROVIDED, AT LEAST ONE HAS A USABLE SHELF NO HIGHER THAN 44" ABOVE FLOOR.

CONTROLS AND OPERATING MECHANISMS

1. ELECTRICAL AND COMMUNICATIONS SYSTEM RECEPTACLES ON WALLS BE MOUNTED NO LESS THAN 15: ABOVE FLOOR.
2. DOOR CLOSER IF PROVIDED SHALL HAVE AT LEAST A 3 SECOND CLOSING TIME PERIOD FROM 79 DEGREES OPEN POSITION TO 3: FROM LATCH
3. FIRE EXTINGUISHER CABINETS AND FIRE HOSE/VALVE CABINET MOUNTING AND REACH MINIMUMS: THE BOTTOM EDGE OF CABINET OR EXTINGUISHER CAN BE NO LOWER THAN 27" WITH THE OPERABLE HANDLE AT 48" FOR FORWARD REACH AND 54" FOR SIDE REACH AND PROJECT NO FURTHER THAN 4" FROM THE WALL.
4. SEE REACH RANGES DETAIL FOR FORWARD AND SIDE REACH MINIMUMS.

REGISTERED PROFESSIONAL ENGINEER
DENNIS M. DALY
No. 32947
CIVIL
STATE OF CALIFORNIA

NO.	DATE	REVISION	BY

SONOMA COUNTY WATER AGENCY

SCALE: NONE
DATE: 06-06-11
DRAWN: SMP
REVIEWED:

SERVICE CENTER RELOCATION (2025 AVIATION BOULEVARD)

CONSTRUCTION DETAILS ADA

FILE NAME: 7449_Details.dwg
CONTRACT NUMBER: 0-706-7 #01
DRAWING NUMBER: A-11
SHEET 20 OF 64

\\SD-DATA\PROJ\GENERAL\VALL FACILITIES\OFFICE-SITES\7449_FLEET_ALV-TP\7449_DETAILS.DWG

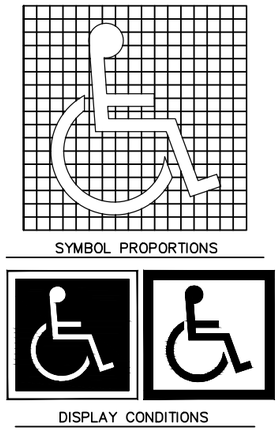

INTERNATIONAL ACCESSIBILITY SYMBOL | 14

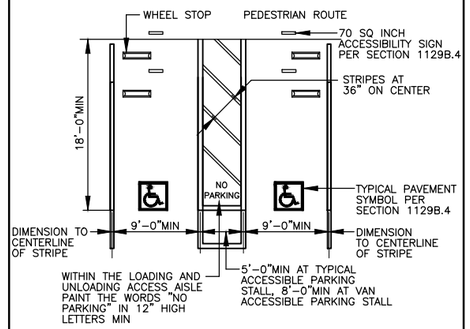

DOUBLE PARKING STALLS | 15

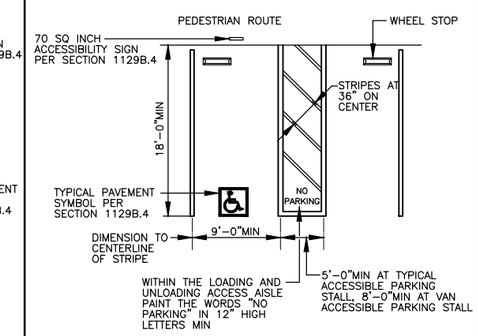

SINGLE PARKING STALLS | 16

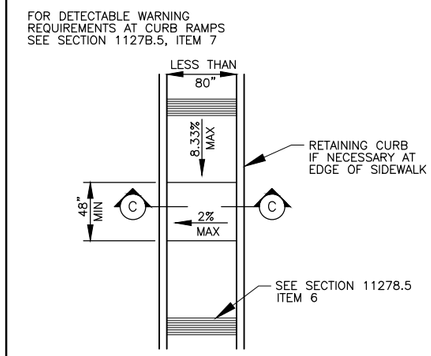

CURB DETAIL | 17

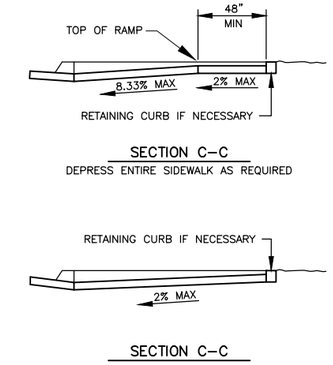

CURB DETAIL | 18

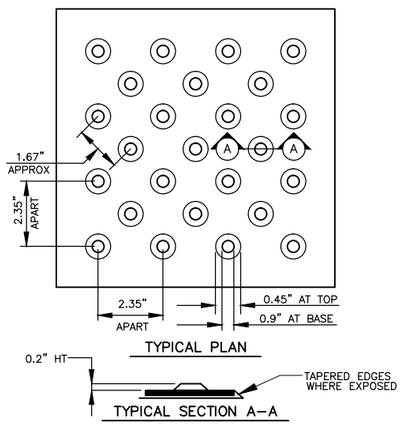

TRUNCATED DOMES | 19

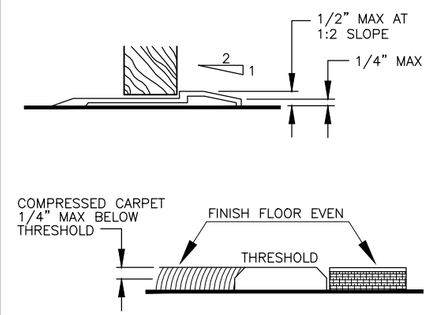

THRESHOLDS | 20

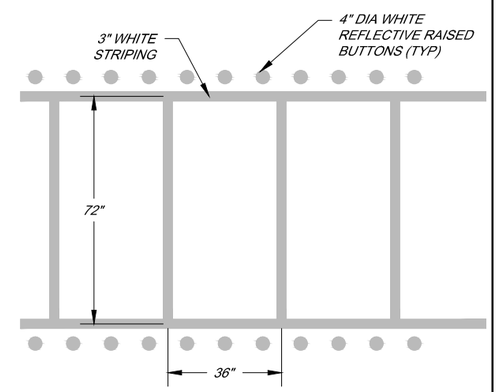

STRIPING DETAIL | 21

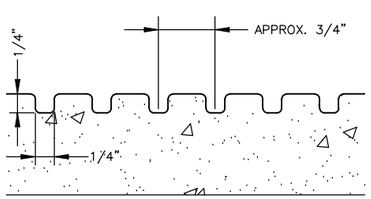

GROOVING DETAIL | 22

CURB RAMPS

1. SLOPE OF CURB RAMPS: THE SLOPE OF CURB RAMPS SHALL NOT EXCEED ONE UNIT VERTICAL TO 12 UNITS HORIZONTAL (8.33-PERCENT SLOPE).
2. LEVEL LANDING: A LEVEL LANDING 4 FEET DEEP SHALL BE PROVIDED AT THE UPPER END OF EACH CURB RAMP OVER ITS FULL WIDTH TO PERMIT SAFE EGRESS FROM THE RAMP SURFACE, OR THE SLOPE OF THE FANNED OR FLARED SIDES OF THE CURB RAMP SHALL NOT EXCEED ONE UNIT VERTICAL TO 12 UNITS HORIZONTAL (8.33-PERCENT SLOPE).
3. FINISH: THE SURFACE OF EACH CURB RAMP AND ITS FLARED SIDES SHALL BE OF CONTRASTING FINISH FROM THAT OF THE ADJACENT SIDEWALK.
4. BORDER: ALL CURB RAMPS SHALL HAVE A GROOVED BORDER 12 INCHES WIDE AT THE LEVEL SURFACE OF THE SIDEWALK ALONG THE TOP AND EACH SIDE APPROXIMATELY 3/4 INCH ON CENTER. ALL CURB RAMPS CONSTRUCTED BETWEEN THE FACE OF THE CURB AND THE STREET SHALL HAVE A GROOVED BORDER AT THE LEVEL SURFACE OF THE SIDEWALK.
5. DETECTABLE WARNINGS: CURB RAMPS SHALL HAVE A DETECTABLE WARNING THAT EXTENDS THE FULL WIDTH AND DEPTH OF THE CURB RAMP, EXCLUDING THE FLARED SIDES, INSIDE THE GROOVED BORDER.
6. CROSS SLOPES ON DIRECTION OF TRAVEL LESS THAN 2-PERCENT.
7. WALK SLOPES IN DIRECTION OF TRAVEL LESS THAN 5-PERCENT.

PARKING

1. EACH LOT OR PARKING STRUCTURE WHERE PARKING IS PROVIDED FOR THE PUBLIC AS CLIENTS, GUESTS, OR EMPLOYEES HAS BEEN PROVIDED WITH ACCESSIBLE PARKING AS REQUIRED BY CCR TITLE 24.
2. ACCESSIBLE PARKING SHALL BE LOCATED AS SHOWN ON SITE PLAN.
3. HANDICAPPED SPACES SHALL BE SO LOCATED THAT DISABLED PERSONS ARE NOT COMPELLED TO WHEEL OR WALK BEHIND PARKED CARS OTHER THAN THEIR OWN. PEDESTRIAN WAYS WHICH ARE ACCESSIBLE TO DISABLED PERSONS SHALL BE PROVIDED FROM EACH HANDICAPPED PARKING SPACE TO RELATED FACILITY, INCLUDING CURB CUTS OR RAMPS AS NEEDED.
4. IDENTIFICATION OF HANDICAPPED SPACES SHALL BE BY A REFLECTORIZED SIGN PERMANENTLY POSTED AT EACH SPACE AND BY A HANDICAPPED PARKING STALL SYMBOL PAINTED ON PAVING SURFACE. SYMBOL MUST BE LOCATED IN SPACE SO THAT IT IS VISIBLE BY A TRAFFIC ENFORCEMENT OFFICER WHEN A VEHICLE IS PROPERLY PARKED IN THE SPACE. (CENTERED AT ENTRANCE TO STALL RECOMMENDED)

REGISTERED PROFESSIONAL ENGINEER DENNIS M. DAGL No. 32947 CIVIL STATE OF CALIFORNIA

NO.	DATE	REVISION	BY

SONOMA COUNTY WATER AGENCY

SCALE: NONE | DATE: 06-06-11
DRAWN: SMP
REVIEWED:

SERVICE CENTER RELOCATION (2025 AVIATION BOULEVARD)
CONSTRUCTION DETAILS ADA

FILE NAME: 7449_Details.dwg
CONTRACT NUMBER: 0-706-7 #01
DRAWING NUMBER: A-12
SHEET 21 OF 64

\\SD-DATA\PRO\GENERAL\ALL FACILITIES\OFFICE-SITES\7449_FLEET_ALV-TP\7449_DETAILS.DWG

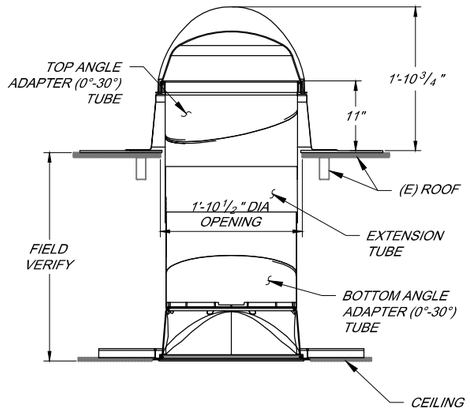

LIGHT TUBE DETAIL (1 / A-9)
NOT TO SCALE

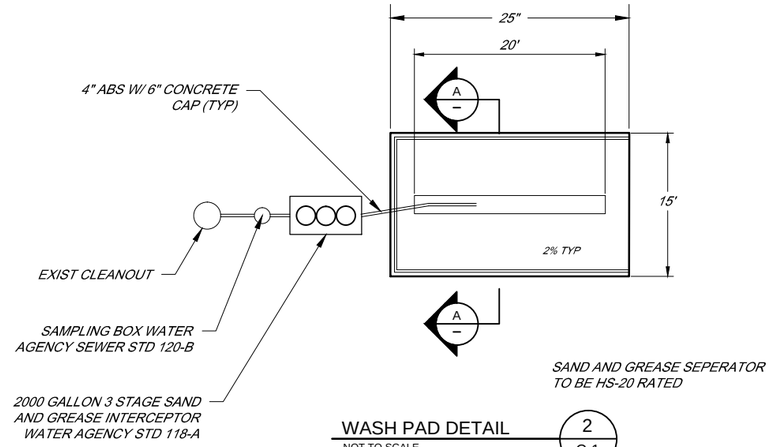

WASH PAD DETAIL (2 / C-1)
NOT TO SCALE

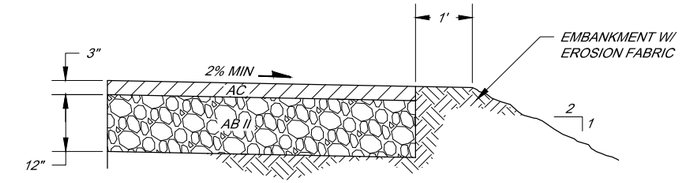

GRADING SECTION (B-B / C-3)
NOT TO SCALE

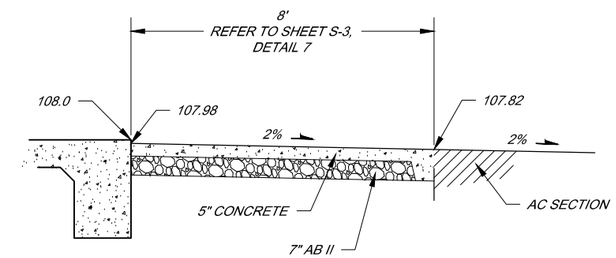

GRADING THRU WALKWAY AND SIDEWALK (C-C / C-3)
NOT TO SCALE

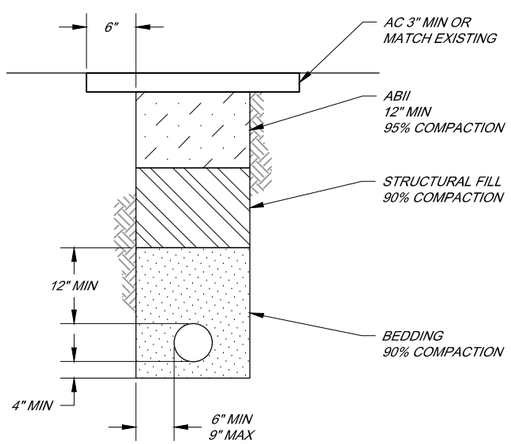

STD TRENCH DETAIL (4 / -)
NOT TO SCALE

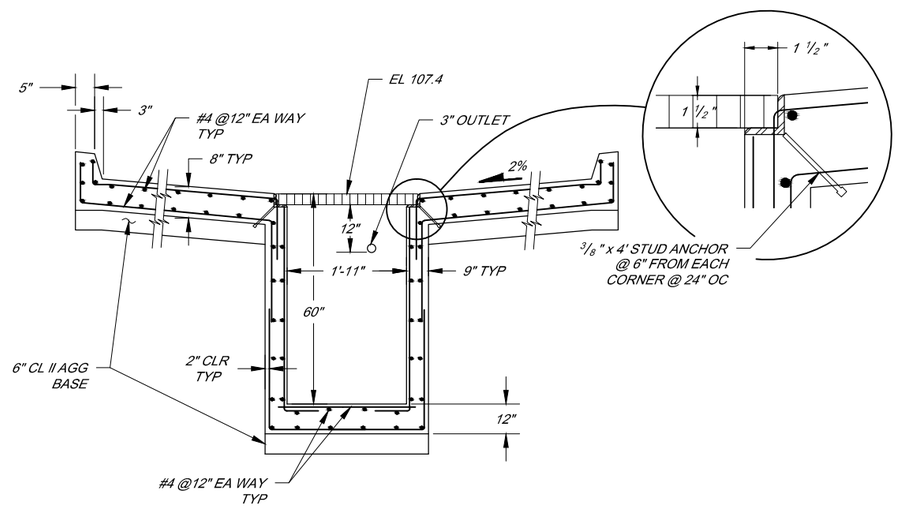

WASH PAD SECTION (A-A / -)
NOT TO SCALE

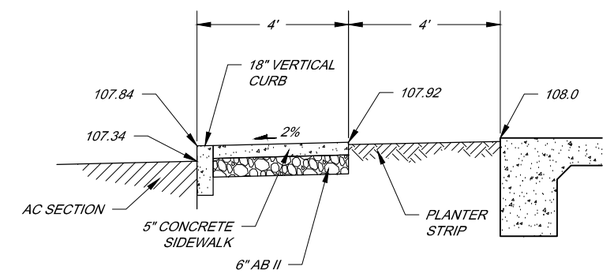

GRADING AT PLANTER AND SIDEWALK (D-D / C-3)
NOT TO SCALE

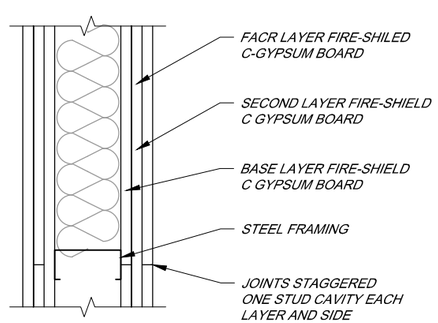

FIRE WALL DETAIL (3 / A-1)
NOT TO SCALE

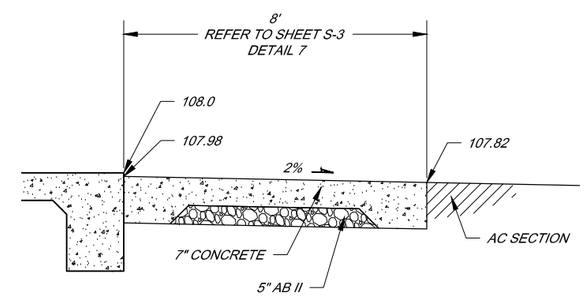

GRADING AT DRIVEWAY APRON (E-E / C-3)
NOT TO SCALE

BAR LENGTH ON ORIGINAL DRAWING EQUALS ONE INCH. ADJUST SCALE ACCORDINGLY

REGISTERED PROFESSIONAL ENGINEER DENNIS M. DAGI No. 32947 CIVIL STATE OF CALIFORNIA

NO.	DATE	REVISION	BY

SONOMA COUNTY WATER AGENCY

SCALE: NONE | DATE: 06-06-11
DRAWN: SMP
REVIEWED:

SERVICE CENTER RELOCATION (2025 AVIATION BOULEVARD)
CONSTRUCTION DETAILS - MISC

FILE NAME: 7449_Details.dwg
CONTRACT NUMBER: 0-706-7 #01
DRAWING NUMBER: A-13
SHEET 22 OF 64

\\SD-DATA\PROJ\GENERAL\ALL FACILITIES\OFFICE-SITES\7449_FLEET_ALV-TP\7449_DETAILS.DWG

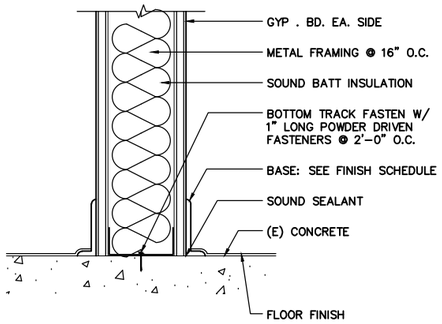

WALL AT FLOOR 1
NOT TO SCALE -

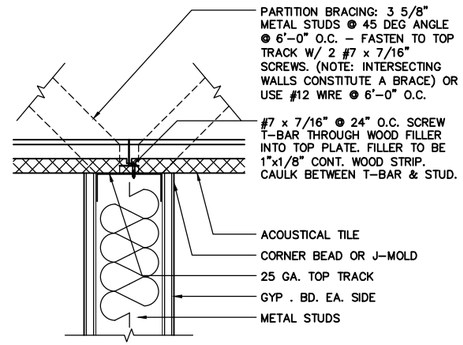

WALL AT SUSPENDED CEILING 2
NOT TO SCALE -

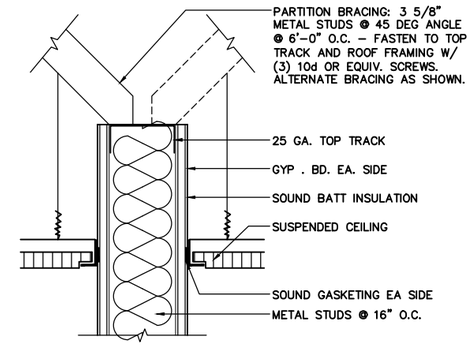

CEILING DETAIL 3
NOT TO SCALE -

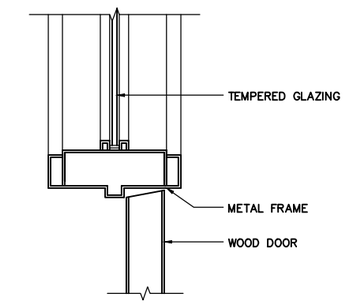

DOOR TRANSOM 4
NOT TO SCALE -

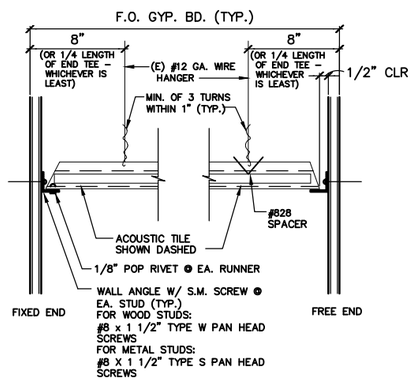

SUSPENDED CEILING AT WALLS 5
NOT TO SCALE -

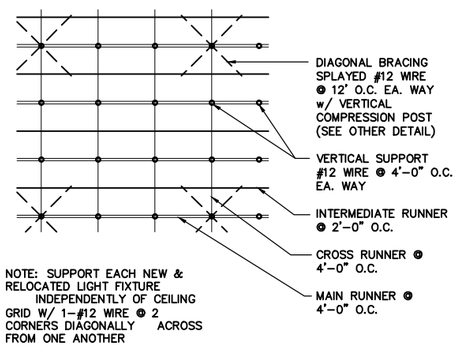

SUSPENDED CEILING 6
NOT TO SCALE -

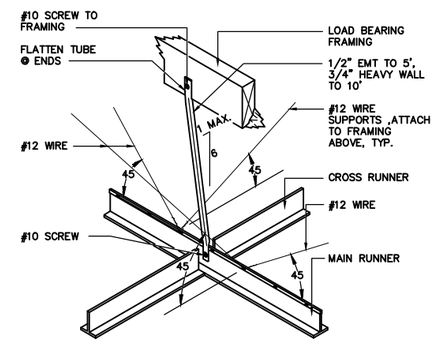

TYP SUSPENDED CEIING 7
NOT TO SCALE -

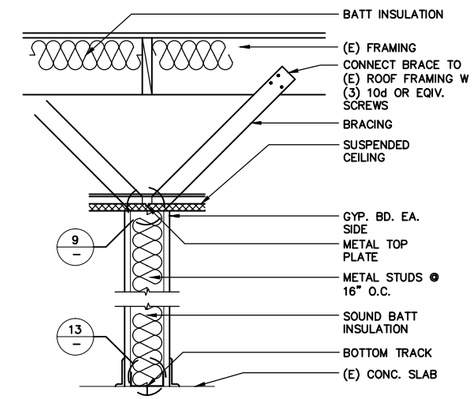

WALL SECTION 8
NOT TO SCALE -

BAR LENGTH ON ORIGINAL DRAWING EQUALS ONE INCH. ADJUST SCALE ACCORDINGLY

REGISTERED PROFESSIONAL ENGINEER
DENNIS M. DALY
No. 32947
CIVIL
STATE OF CALIFORNIA

NO.	DATE	REVISION	BY

SONOMA COUNTY WATER AGENCY

SCALE : NONE
DATE : 06-06-11
DRAWN : SMP
REVIEWED :

SERVICE CENTER RELOCATION (2025 AVIATION BOULEVARD)
CONSTRUCTION DETAILS - MISC

FILE NAME: 7449_Details_Walls.dwg
CONTRACT NUMBER: 0-706-7 #01
DRAWING NUMBER: A-14
SHEET 23 OF 64

\\SD-DATA\PROJ\GENERAL\ALL FACILITIES\OFFICE-SITES\7449_FLEET_ALV-TPV\7449_DETAILS_WALLS.DWG

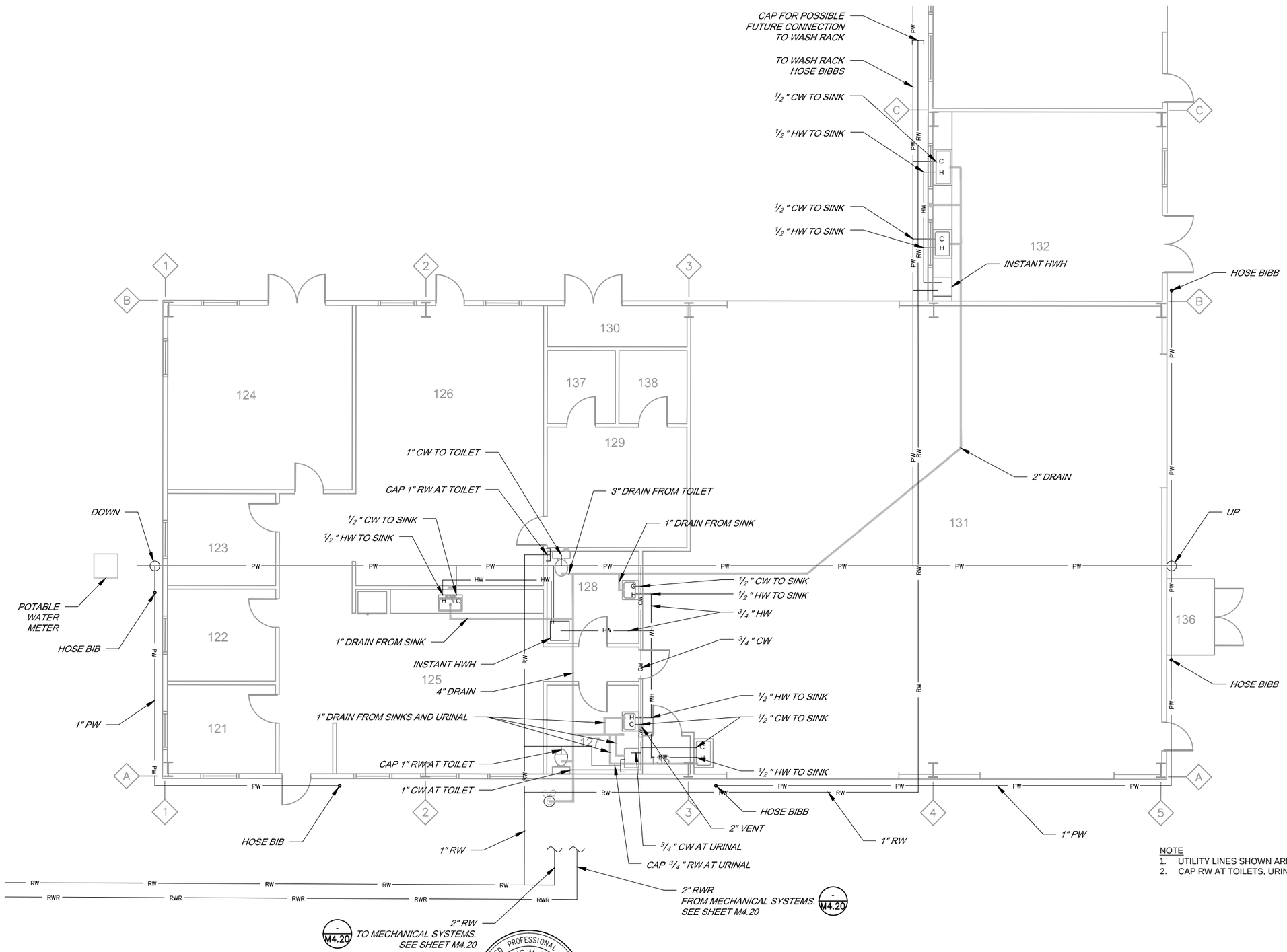

NOTE
1. UTILITY LINES SHOWN ARE SCHEMATIC.
2. CAP RW AT TOILETS, URINALS, AND WASH RACK FOR POSSIBLE FUTURE CONNECTION.

BAR LENGTH ON ORIGINAL DRAWING EQUALS ONE INCH. ADJUST SCALE ACCORDINGLY

REGISTERED PROFESSIONAL ENGINEER DENNIS M. DALY No. 32947 CIVIL STATE OF CALIFORNIA

NO.	DATE	REVISION	BY

SONOMA COUNTY WATER AGENCY

SCALE: 3/16" = 1'-0"
DATE: 06-06-11
DRAWN: SMP
REVIEWED:

SERVICE CENTER RELOCATION (2025 AVIATION BOULEVARD)

PLUMBING PLAN

FILE NAME: 7449_Plumbing.dwg
CONTRACT NUMBER: 0-706-7 #01
DRAWING NUMBER: P-1
SHEET 24 OF 64

\\Sd-data\proj\general\all Facilities\office-sites\7449_Fleet_ALW-TP\7449_Plumbing.dwg

PRIMARY ELEMENT SYMBOLOGY

- NON–AUTO VALVE
- PUMP
- VFD — VARIABLE FREQUENCY DRIVE
- DIRECTION ARROW
- BUTTERFLY VALVE
- BALL VALVE

LINE TYPES

- MAIN PROCESS LINE NEW
- MAIN PROCESS LINE EXISTING
- SIGNAL CONDUCTOR
- EXISTING

MISCELLANEOUS PROCESS AND INSTRUMENTATION ABBREVIATIONS

HP	HEAT PUMP
FC	FAN COIL
FIT	FLOW INDICATION TRANSMITTER
LIT	LEVEL INDICATING TRANSMITTER
PIT	PRESSURE INDICATING TRANSMITTER
TIT	TEMPERATURE INDICATING TRANSMITTER
RW	RECYCLED WATER
RWR	RECYCLED WATER RETURN
VFD	VARIABLE FREQUENCY DRIVE
LG	LEVEL GAUGE
LSL	LEVEL SWITCH – LOW
LCP	LOCAL CONTROL PANEL
NC	NORMALLY CLOSED
PI	PRESSURE INDICATOR
RF	REVERSE FILTRATION
TFE	TERTIARY FILTER EFFLUENT
TFE OF	TERTIARY FILTER EFFLUENT OVERFLOW
XR	EXISTING EXCESS RECIRCULATING PUMPS

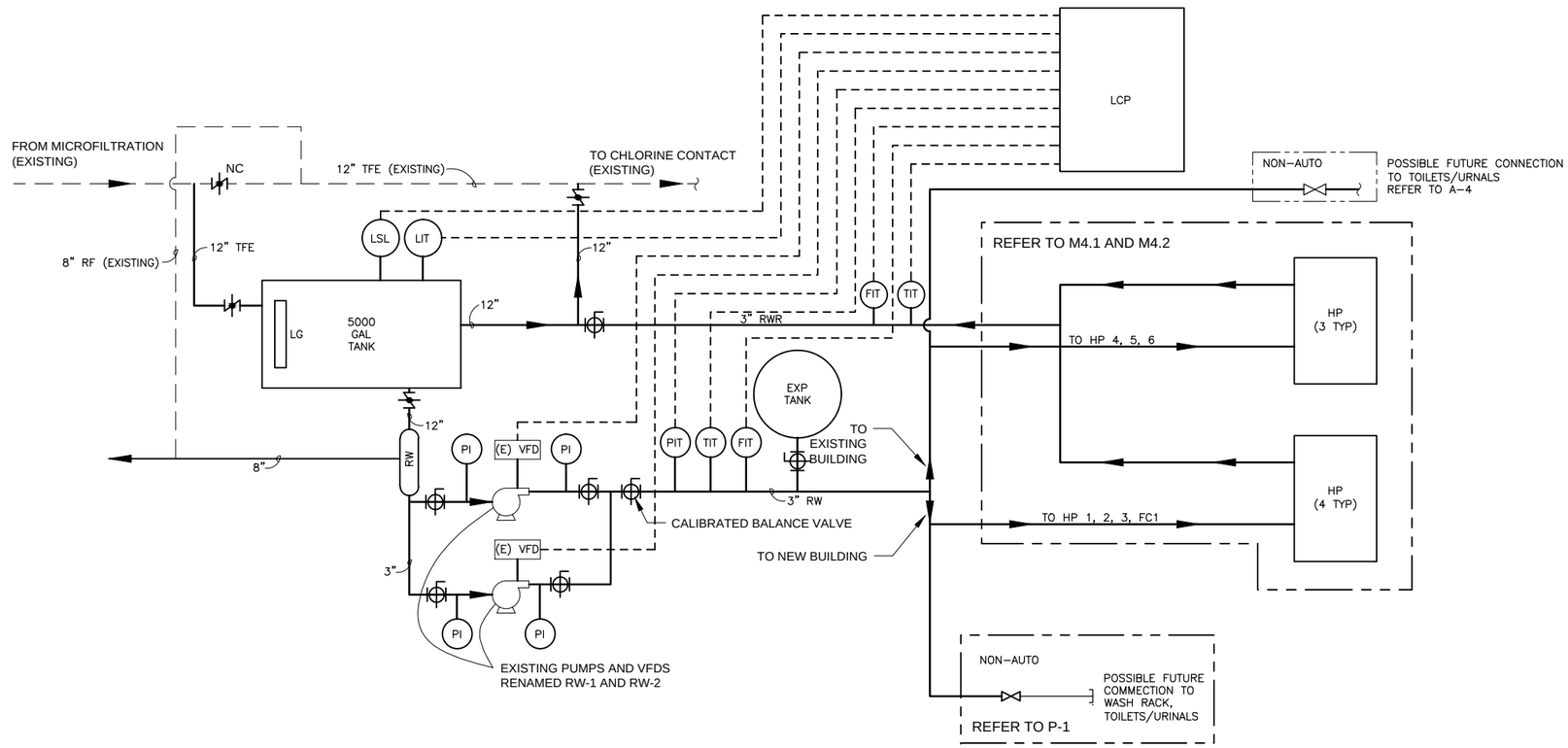

GENERAL NOTES:

1. THIS IS A STANDARD INSTRUMENTATION SYMBOLS AND ABBREVIATION SHEET. LISTING OF SYMBOLS AND ABBREVIATIONS DOES NOT IMPLY ALL SYMBOLS AND ABBREVIATIONS HAVE BEEN USED ON THIS PROJECT.
2. SEE GENERAL SYMBOL DRAWING FOR VALVING AND PIPING SYMBOLS.
3. SCREENING OR SHADING OF WORK IS USED TO INDICATE EXISTING COMPONENTS OR TO DE–EMPHASIZE PROPOSED IMPROVEMENTS TO HIGHLIGHT SELECTED TRADE WORK, REFER TO CONTEXT OF EACH DRAWING FOR USAGE.
4. SEE PROJECT EQUIPMENT AND PIPING SYSTEMS DRAWING FOR SYMBOLS AND ABBREVIATIONS SPECIFIC TO THE PROJECT.

BAR LENGTH ON ORIGINAL DRAWING EQUALS ONE INCH. ADJUST SCALE ACCORDINGLY

REGISTERED PROFESSIONAL ENGINEER — DALE P. ROBERTS — No. 029944 — MECHANICAL — STATE OF CALIFORNIA

NO.	DATE	REVISION	BY

SONOMA COUNTY WATER AGENCY

SCALE: NO SCALE
DATE: 6/6/2011
DRAWN: JLW
REVIEWED:

SERVICE CENTER RELOCATION (2025 AVIATION BOULEVARD)

RECYCLED WATER SYSTEM PROCESS DIAGRAM

FILE NAME: 7449_RW_PandI.dwg
CONTRACT NUMBER: 0-706-7 #01
DRAWING NUMBER: M-1
SHEET 25 OF 64

\\Sd-data\proj\general\all Facilities\office-sites\7449_Fleet_ALW-TP\7449_RW_PandI.dwg

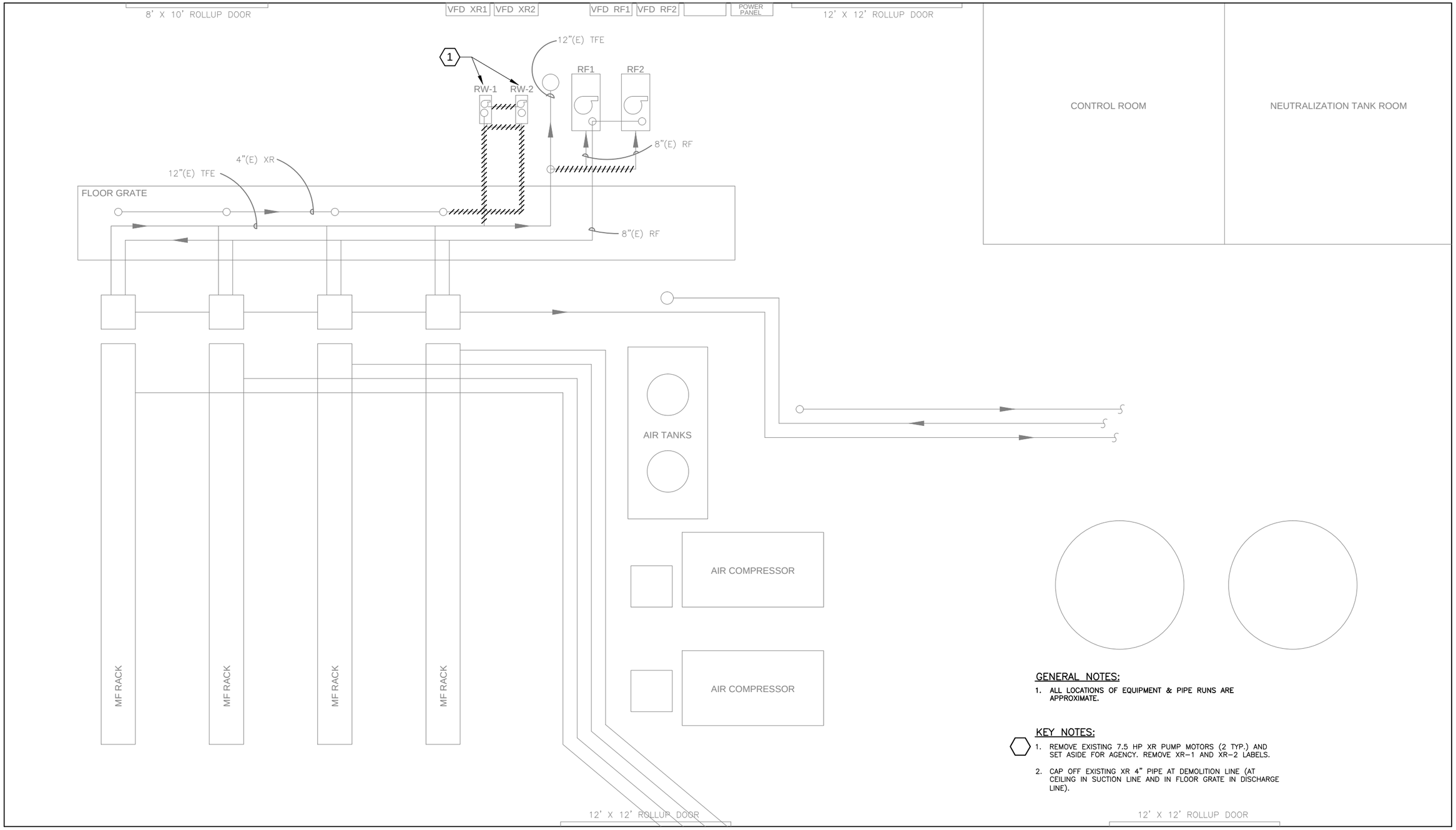

GENERAL NOTES:

1. ALL LOCATIONS OF EQUIPMENT & PIPE RUNS ARE APPROXIMATE.

KEY NOTES:

1. REMOVE EXISTING 7.5 HP XR PUMP MOTORS (2 TYP.) AND SET ASIDE FOR AGENCY. REMOVE XR–1 AND XR–2 LABELS.
2. CAP OFF EXISTING XR 4" PIPE AT DEMOLITION LINE (AT CEILING IN SUCTION LINE AND IN FLOOR GRATE IN DISCHARGE LINE).

BAR LENGTH ON ORIGINAL DRAWING EQUALS ONE INCH. ADJUST SCALE ACCORDINGLY

REGISTERED PROFESSIONAL ENGINEER
DALE P. ROBERTS
No. 029944
MECHANICAL
STATE OF CALIFORNIA

NO.	DATE	REVISION	BY

SONOMA COUNTY WATER AGENCY

SCALE: 1" = 40'
DATE: 6/3/2011
DRAWN: JLW
REVIEWED:

SERVICE CENTER RELOCATION (2025 AVIATION BOULEVARD)

RECYCLED WATER SYSTEM
PLAN FILTER BUILDING DEMOLITION

FILE NAME: 7449_RW_PandI.dwg
CONTRACT NUMBER: 0-706-7 #01
DRAWING NUMBER: M-2
SHEET 26 OF 64

\\Sd-data\pro\general\all Facilities\office-sites\7449_Fleet_ALW-TP\7449_RW_PandI.dwg

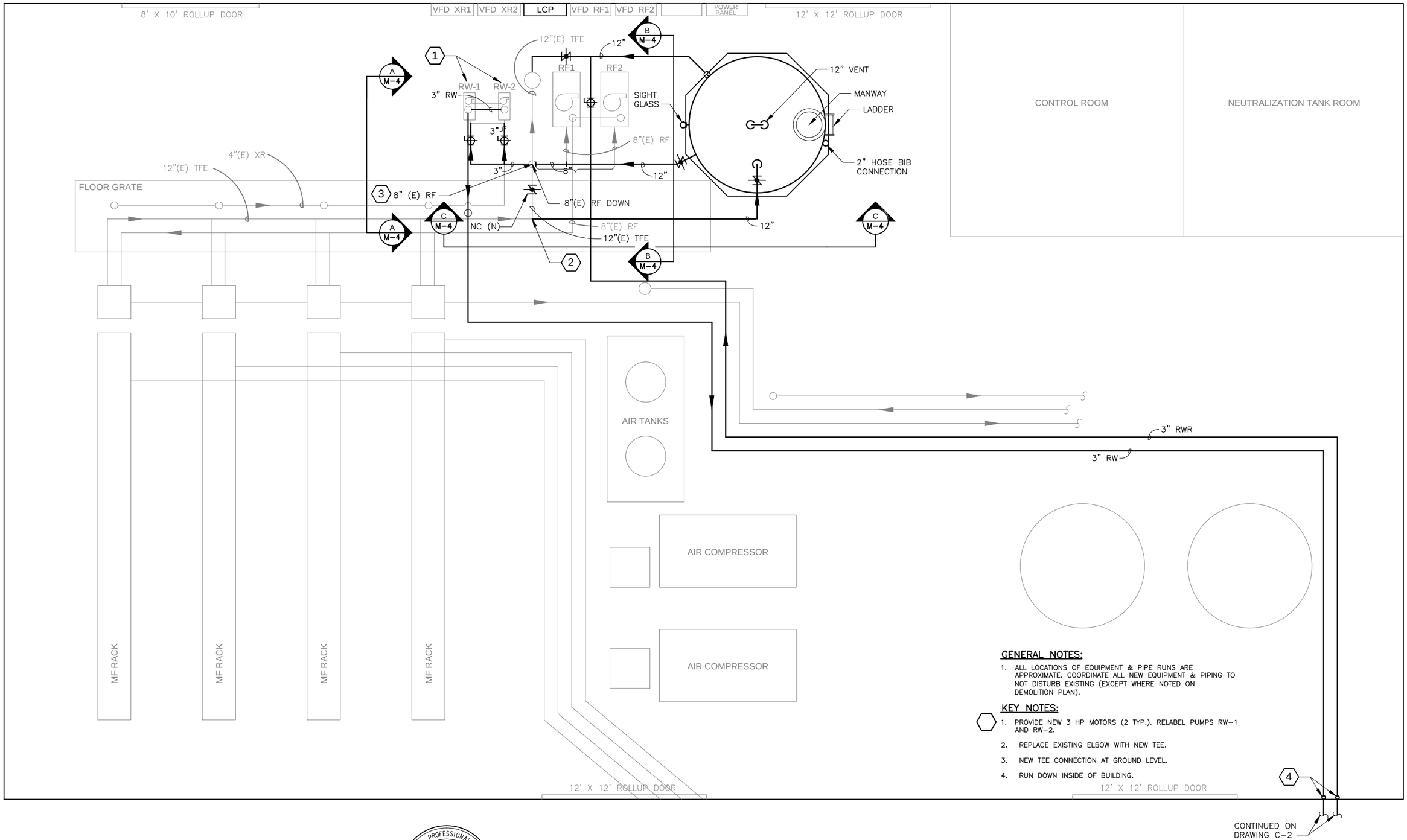

GENERAL NOTES:

1. ALL LOCATIONS OF EQUIPMENT & PIPE RUNS ARE APPROXIMATE. COORDINATE ALL NEW EQUIPMENT & PIPING TO NOT DISTURB EXISTING (EXCEPT WHERE NOTED ON DEMOLITION PLAN).

KEY NOTES:

1. PROVIDE NEW 3 HP MOTORS (2 TYP.). RELABEL PUMPS RW-1 AND RW-2.
2. REPLACE EXISTING ELBOW WITH NEW TEE.
3. NEW TEE CONNECTION AT GROUND LEVEL.
4. RUN DOWN INSIDE OF BUILDING.

BAR LENGTH ON ORIGINAL DRAWING EQUALS ONE INCH. ADJUST SCALE ACCORDINGLY

REGISTERED PROFESSIONAL ENGINEER
DALE P. ROBERTS
No. 029944
MECHANICAL
STATE OF CALIFORNIA

NO.	DATE	REVISION	BY

SONOMA COUNTY WATER AGENCY

SCALE: 1" = 40'
DATE: 6/3/2011
DRAWN: JLW
REVIEWED:

SERVICE CENTER RELOCATION (2025 AVIATION BOULEVARD)

RECYCLED WATER SYSTEM
PLAN FILTER BUILDING

FILE NAME: 7449_RW_PandI.dwg
CONTRACT NUMBER: 0-706-7 #01
DRAWING NUMBER: M-3
SHEET 27 OF 64

\\Sd-data\proj\general\all Facilities\office-sites\7449_Fleet_ALW-TP\7449_RW_PandI.dwg

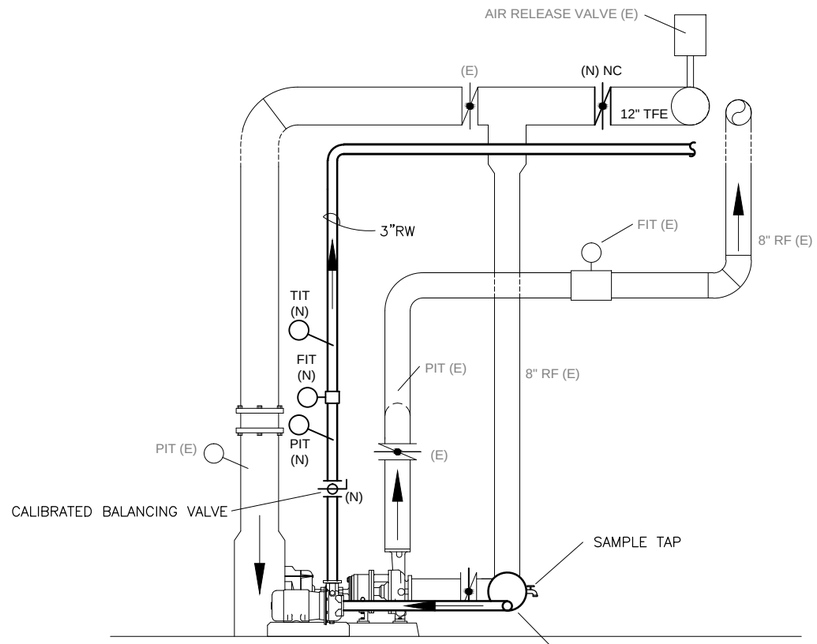

SECTION A M-3

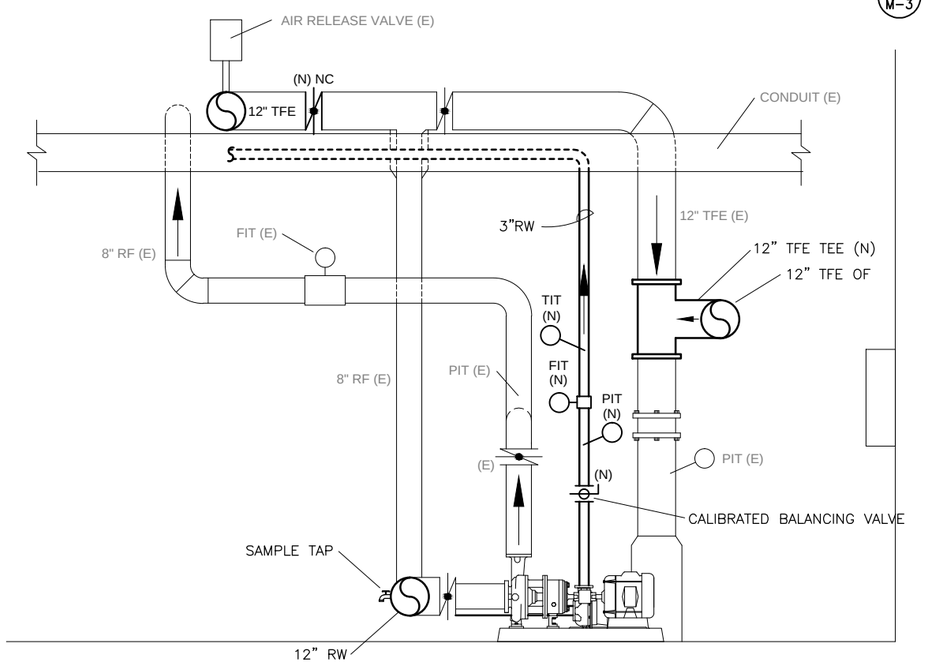

SECTION B M-3

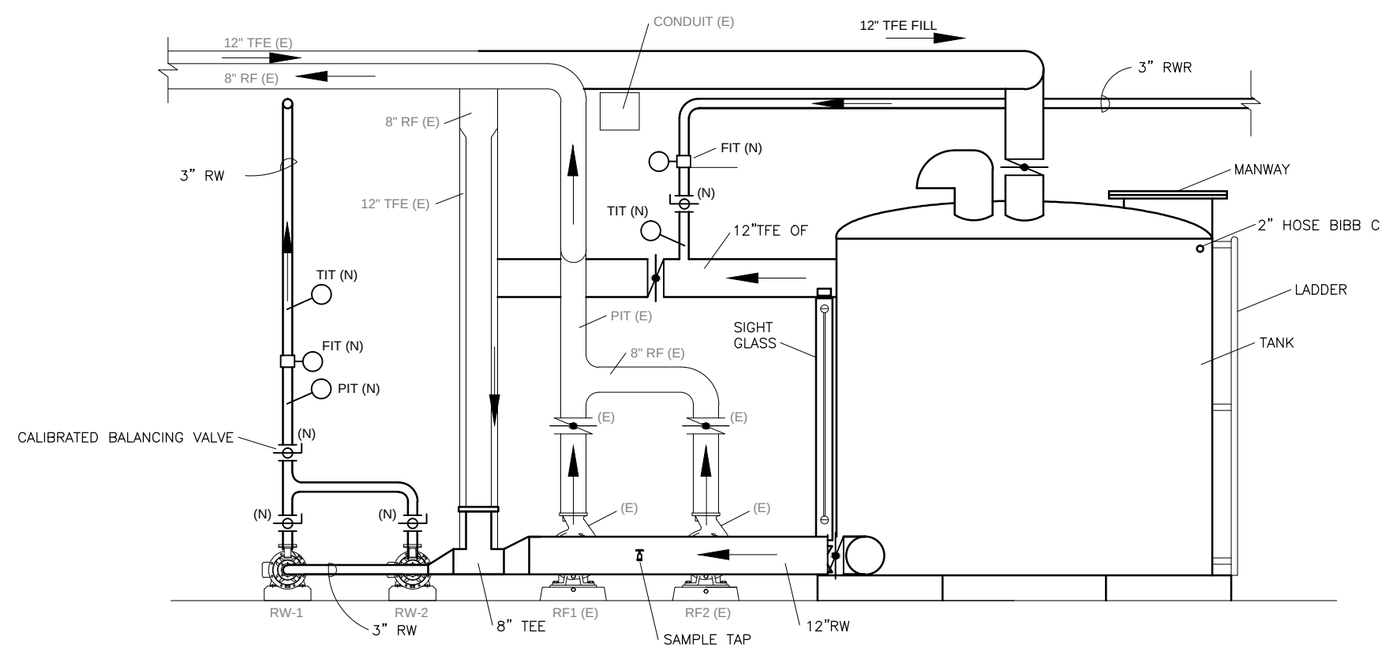

SECTION C M-3

BAR LENGTH ON ORIGINAL DRAWING EQUALS ONE INCH. ADJUST SCALE ACCORDINGLY

REGISTERED PROFESSIONAL ENGINEER
DALE P. ROBERTS
No. 029944
MECHANICAL
STATE OF CALIFORNIA

NO.	DATE	REVISION	BY

SONOMA COUNTY WATER AGENCY

SCALE: 1/2" = 1'-0"
DATE: 6/3/2011
DRAWN: JLW
REVIEWED:

SERVICE CENTER RELOCATION (2025 AVIATION BOULEVARD)

RECYCLED WATER SYSTEM
SECTIONS

FILE NAME: 7449_RW_Pandl.dwg
CONTRACT NUMBER: 0-706-7 #01
DRAWING NUMBER: M-4
SHEET 28 OF 64

\\Sd-data\proj\general\all Facilities\office-sites\7449_Fleet_ALW-TP\7449_RW_Pandl.dwg

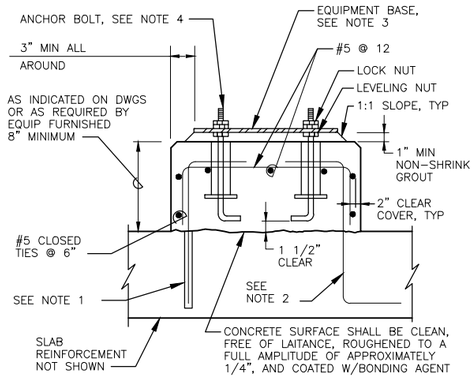

A EQUIPMENT BASE

NOTES:

1. FOR NEW EQUIPMENT BASES ON EXISTING SLABS, DRILL INTO EXISTING SLAB TO DEVELOPMENT DEPTH AT 12" CENTERS AROUND PERIMETER OF EQUIPMENT BASE AND SET #5 HOOKED DOWELS IN EPOXY GROUT.
2. FOR EQUIPMENT BASES ON NEW SLABS, PROVIDE #5 DOWELS HAVING TWO HOOKED ENDS AT 12" CENTERS AROUND PERIMETER OF EQUIPMENT BASE.
3. EQUIPMENT BASE DIMENSIONS SHALL BE AS INDICATED ON THE DRAWINGS OR AS DETERMINED BY THE EQUIPMENT MANUFACTURER AND APPROVED BY THE OWNER. FIELD VERIFY EXISTING EQUIPMENT BASE DIMENSIONS FOR EQUIPMENT TO BE RELOCATED PRIOR TO POURING PAD AND LOCATING ANCHOR BOLTS.
4. ANCHOR BOLTS AS RECOMMENDED BY THE EQUIPMENT MANUFACTURER. BOLTS SHALL BE HELD IN POSITION WITH A TEMPLATE WHILE EQUIPMENT BASE IS BEING CAST.
5. PIPE SLEEVES SHALL BE USED TO PROVIDE THE ANCHOR BOLT A MINIMUM MOVEMENT OF 1/2" IN ALL DIRECTIONS. MINIMUM SLEEVE LENGTH SHALL BE 8 TIMES THE BOLT DIAMETER. SLEEVES SHALL BE FILLED WITH NON-SHRINK GROUT. PIPE SLEEVES SHALL HAVE A MINIMUM INTERNAL DIAMETER 1" GREATER THAN BOLT DIAMETER AND A MAXIMUM INTERNAL DIAMETER OF 3" GREATER THAN BOLT DIAMETER.
6. EQUIPMENT BASES SHALL BE INSTALLED LEVEL. TOLERANCE IS 1/16".
7. COORDINATE WITH TRENCH DRAIN AS SHOWN ON PLAN.

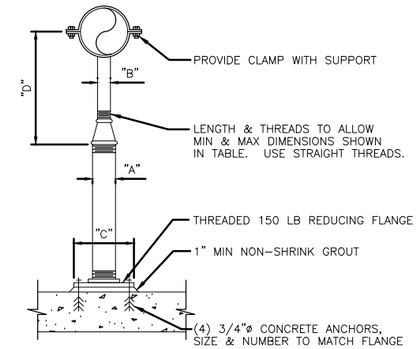

NOTES:

1. HOT-DIP GALVANIZE AFTER FABRICATION.
2. PIPE SHALL BE SCHEDULE 40.

B ADJUSTABLE PIPE SUPPORT

ADJUSTABLE PIPE SUPPORT SCHEDULE
DIMENSIONS IN INCHES

PIPE SIZE	"A"	"B"	"C"	"D"	
				MINIMUM	MAXIMUM
≤ 2 1/2	2 1/2	1 1/2	9	8	13
3	2 1/2	1 1/2	9	8 1/2	13 1/2
3 1/2	2 1/2	1 1/2	9	8 1/2	13 1/2
4	3	2 1/2	9	9 1/2	14
6	3	2 1/2	9	10 1/2	15 1/2
8	3	2 1/2	9	11 1/2	16 1/2
10	3	2 1/2	9	13 1/2	18 1/2
12	3	2 1/2	9	15	19 1/2
14	4	3	11	16 1/2	20 1/2
16	4	3	11	17 1/2	22 1/2
18	6	3 1/2	13 1/2	19 1/2	24
20	6	3 1/2	13 1/2	21	25 1/2
24	6	4	13 1/2	23 1/2	28 1/2
30	6	4	13 1/2	27	31 1/2
32	6	4	13 1/2	28 1/2	32 1/2
36	6	4	13 1/2	30 1/2	34 1/2

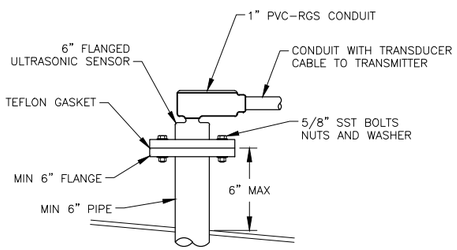

NOTE:
SIZE PIPE AND FLANGE FOR SENSOR PROVIDED.

C ULTRASONIC LEVEL TRANSMITTER (LIT)

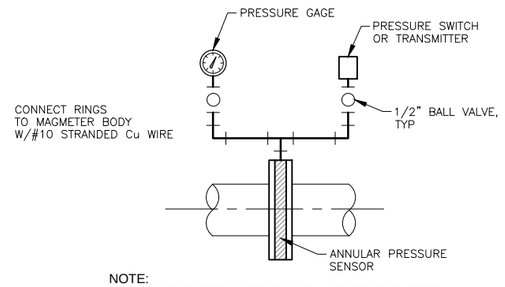

NOTE:
ANNULAR TYPE PRESSURE SENSOR UNITS TO BE FACTORY ASSEMBLED.

D PRESSURE INDICATING TRANSMITTER DETAIL (PIT)

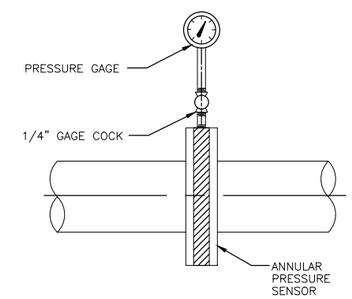

E PRESSURE GAGE (PI)

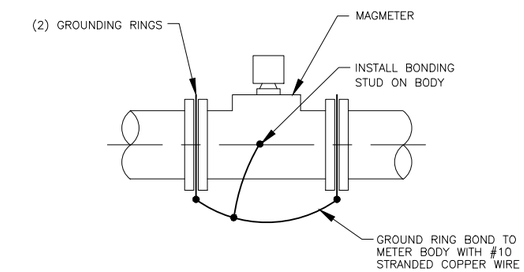

F MAGNETIC FLOW METER (FIT) GROUNDING RING BONDING DETAIL

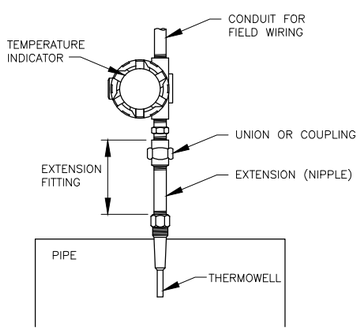

G TEMPERATURE INDICATING TRANSMITTER DETAIL (TIT)

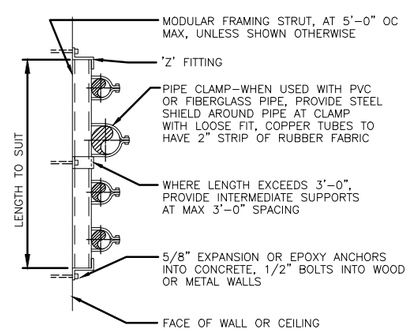

NOTE:
UP TO 8"ø PIPES ONLY

H SURFACE MOUNT MODULAR STRUT

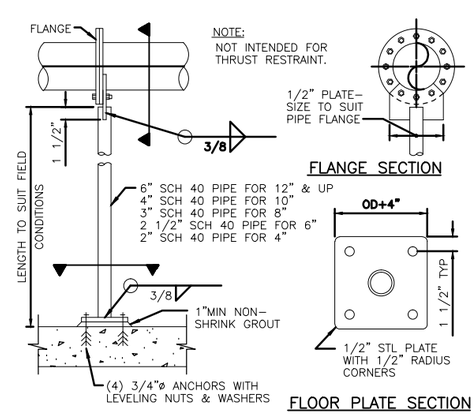

J FLANGED PIPE SUPPORT

BAR LENGTH ON ORIGINAL DRAWING EQUALS ONE INCH. ADJUST SCALE ACCORDINGLY

REGISTERED PROFESSIONAL ENGINEER
DALE P. ROBERTS
No. 029944
MECHANICAL
STATE OF CALIFORNIA

NO.	DATE	REVISION	BY

SONOMA COUNTY WATER AGENCY

SCALE: NO SCALE
DATE: 6/6/2011
DRAWN: JLW
REVIEWED:

SERVICE CENTER RELOCATION (2025 AVIATION BOULEVARD)
RECYCLED WATER SYSTEM
DETAIL SHEET

FILE NAME: 7449_RW_Pandl.dwg
CONTRACT NUMBER: 0-706-7 #01
DRAWING NUMBER: M-5
SHEET 29 OF 64

\\Sd-data\proj\general\all Facilities\office-sites\7449_Fleet_ALW-TP\7449_RW_Pandl.dwg

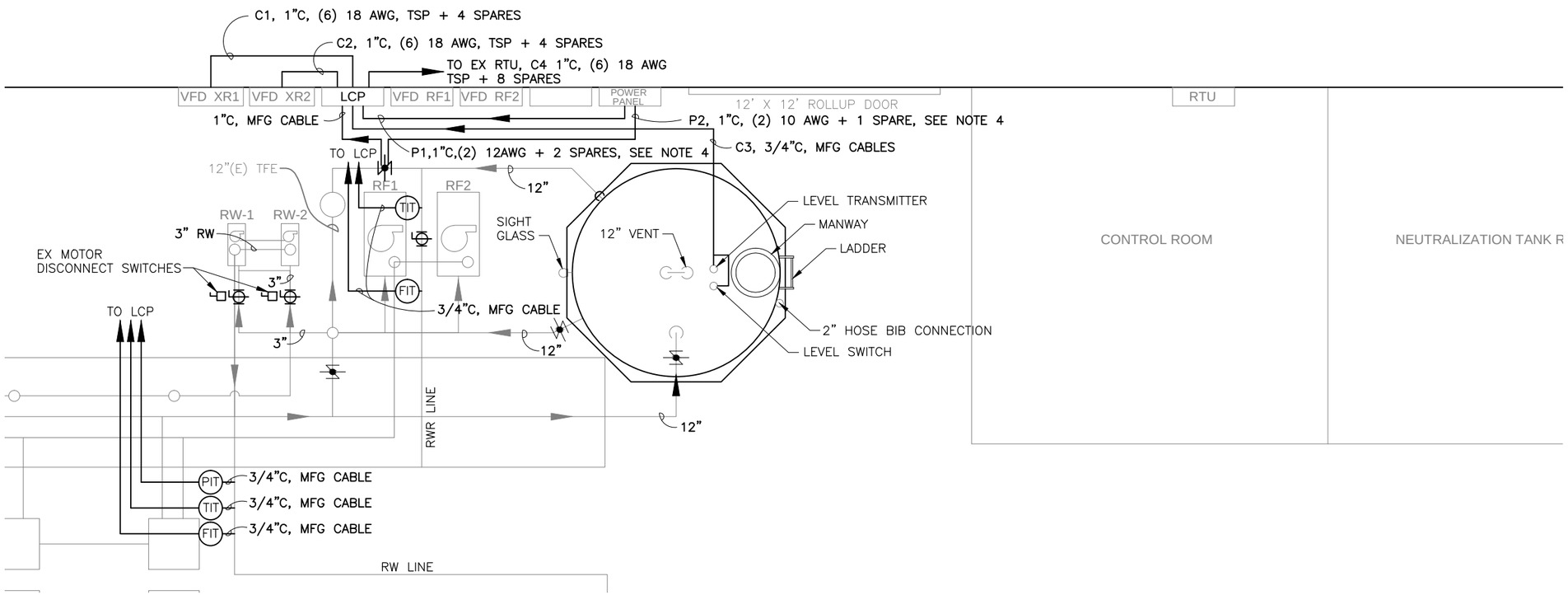

Electrical Site Plan

NOTES:

1. MOUNT NEW LOCAL CONTROL PANEL (LCP) ON WALL 6" ABOVE VENT.
2. CONDUIT ROUTES SHOWN ARE SCHEMATIC.
3. REUSE EX CIRCUIT BREAKERS, DISCONNECT SWITCHES, WIRING AND CONDUITS FOR NEW RW PUMPS.
4. PROVIDE CIRCUIT BREAKERS FOR ALL NEW EQUIPMENT PER MANUFACTURERS INSTRUCTIONS.

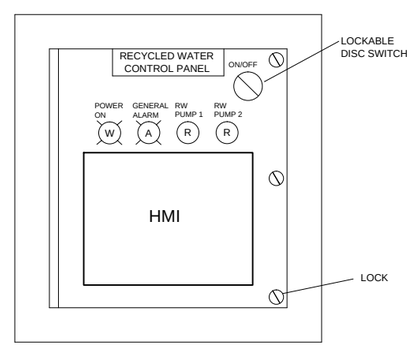

LCP Door Layout

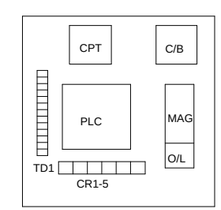

Panel Layout

BAR LENGTH ON ORIGINAL DRAWING EQUALS ONE INCH. ADJUST SCALE ACCORDINGLY

REGISTERED PROFESSIONAL ENGINEER
JEANETTE A. HAYES
No. 17078
ELECTRICAL
STATE OF CALIFORNIA

NO.	DATE	REVISION	BY

SONOMA COUNTY WATER AGENCY

SCALE: 1" = 40'
DATE: 6/6/2011
DRAWN: JLW
REVIEWED:

SERVICE CENTER RELOCATION (2025 AVIATION BOULEVARD)
RECYCLED WATER SYSTEM
ELECTRICAL SITE PLAN AND PANEL LAYOUTS

FILE NAME: 7449_Electrical.dwg
CONTRACT NUMBER: 0-706-7 #01
DRAWING NUMBER: ME-1
SHEET 30 OF 64

\\Sd-data\proj\general\all Facilities\office-sites\7449_Fleet_ALW-TP\7449_Electrical.dwg

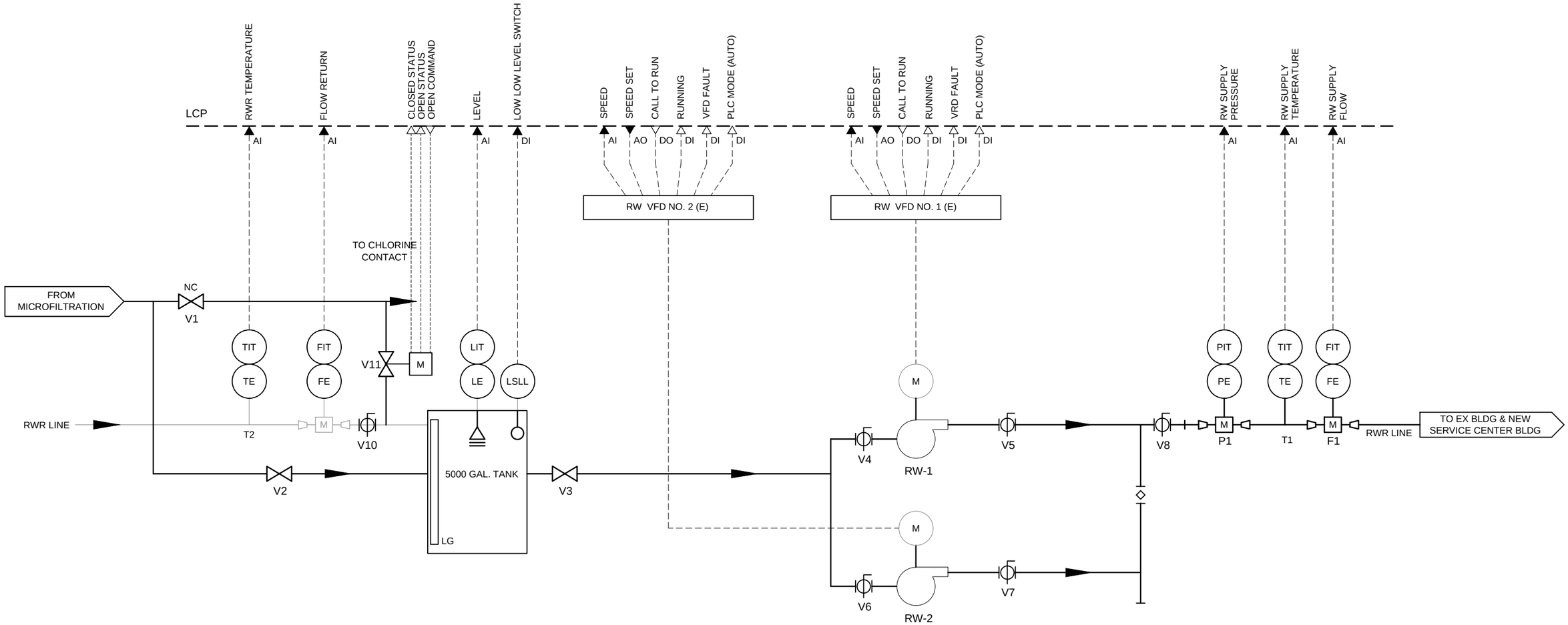

RECYCLED WATER (PUMPS)

BAR LENGTH ON ORIGINAL DRAWING EQUALS ONE INCH. ADJUST SCALE ACCORDINGLY

REGISTERED PROFESSIONAL ENGINEER
JUENETTE A. HAYES
No. 17078
ELECTRICAL
STATE OF CALIFORNIA

NO.	DATE	REVISION	BY

SONOMA COUNTY WATER AGENCY

SCALE: NO SCALE
DATE: 6/3/2011
DRAWN: JLW
REVIEWED:

SERVICE CENTER RELOCATION (2025 AVIATION BOULEVARD)

RECYCLED WATER SYSTEM
INSTRUMENTATION DIAGRAM

FILE NAME: 7449_Electrical.dwg
CONTRACT NUMBER: 0-706-7 #01
DRAWING NUMBER: ME-2
SHEET 31 OF 64

\\Sd-data\proj\general\all Facilities\office-sites\7449_Fleet_ALW-TP\7449_Electrical.dwg

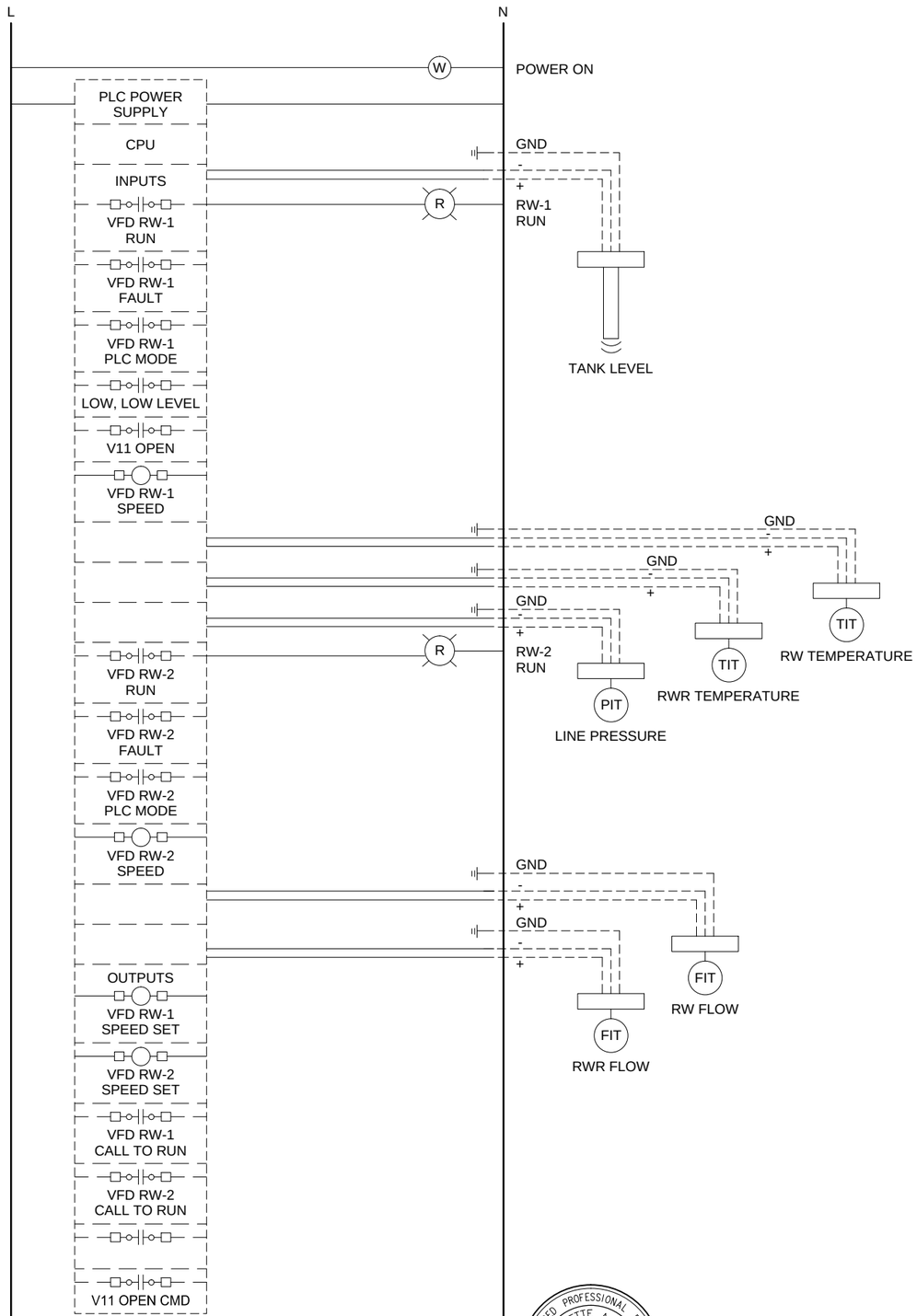

BAR LENGTH ON ORIGINAL DRAWING EQUALS ONE INCH. ADJUST SCALE ACCORDINGLY

REGISTERED PROFESSIONAL ENGINEER
JEANNETTE A. HAYES
No. 17078
ELECTRICAL
STATE OF CALIFORNIA

NO.	DATE	REVISION	BY

SONOMA COUNTY WATER AGENCY

SCALE : 1" = 40'
DATE : 6/3/2011
DRAWN : JLW
REVIEWED :

SERVICE CENTER RELOCATION (2025 AVIATION BOULEVARD)

RECYCLED WATER SYSTEM
CONTROL PANEL

FILE NAME: 7449_Electrical.dwg
CONTRACT NUMBER: 0-706-7 #01

DRAWING NUMBER: ME-3

SHEET 32 OF 64

\\Sd-data\proj\general\all Facilities\office-sites\7449_Fleet_ALW-TP\7449_Electrical.dwg

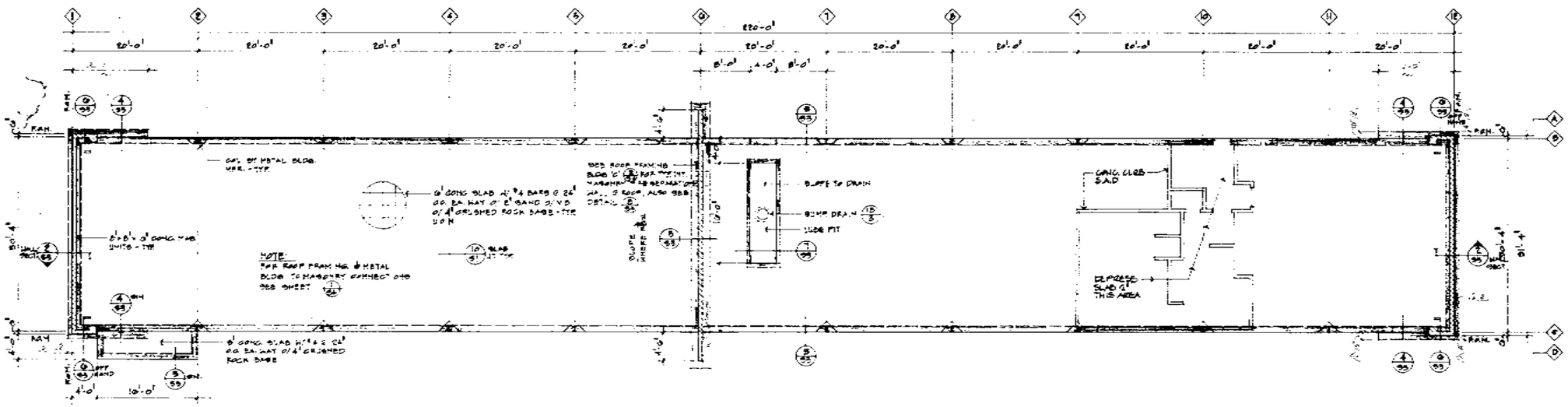

FOUNDATION PLAN (BLDG. A)

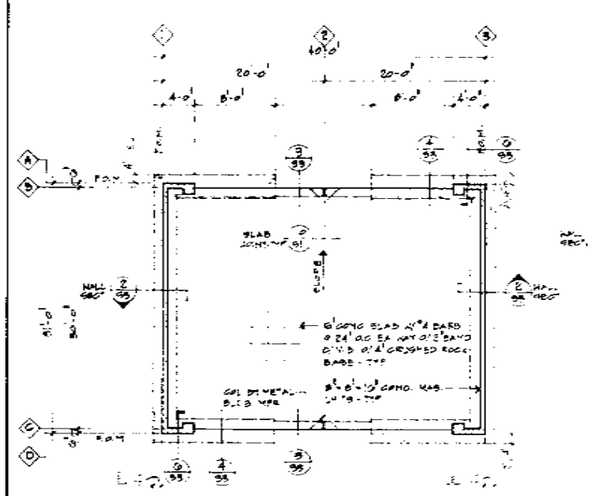

FOUNDATION PLAN (BLDG. B)

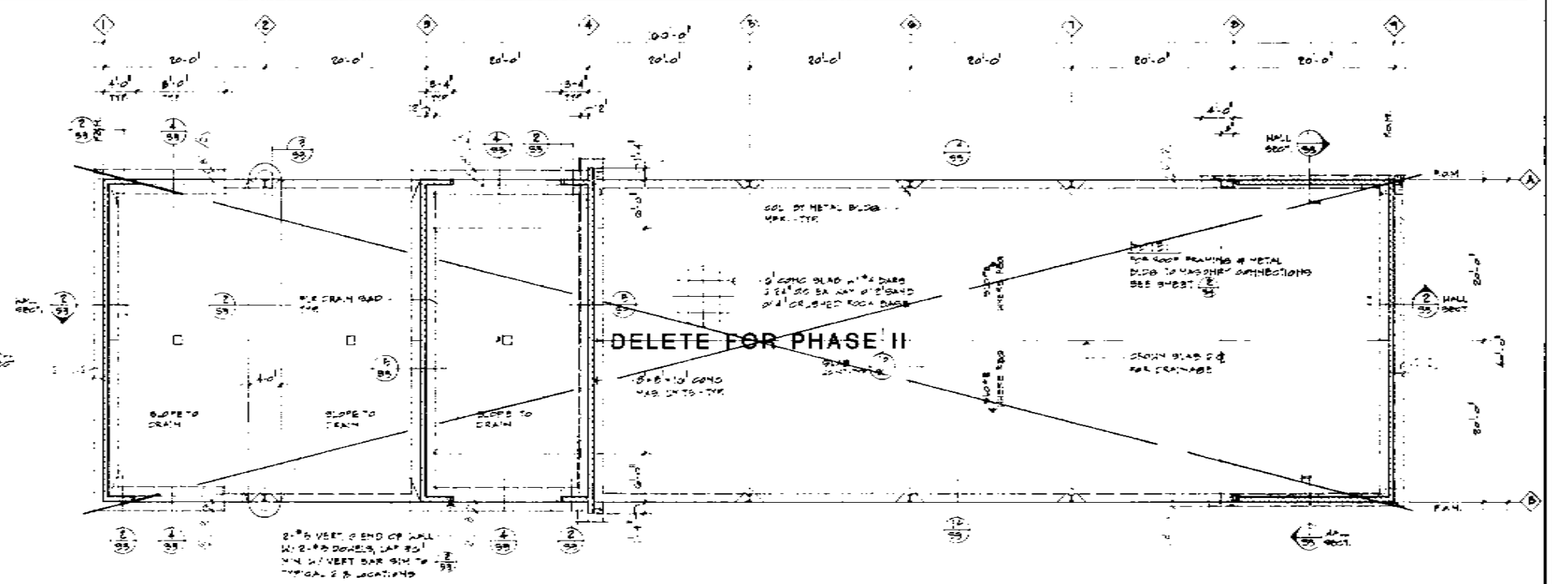

FOUNDATION PLAN (BLDG. C)

RECORD DRAWING 42587

REVISIONS	BY
1 80 REVS 5-7-06	DB

MKM & ASSOCIATES
CIVIL & STRUCTURAL ENGINEERS
401 COLLEGE AVE. · SANTA ROSA, CALIFORNIA 95401
(707) 575-5565

WASTEWATER OPERATIONS DEPARTMENT
COUNTY OF SONOMA
SONOMA COUNTY AIRPORT

Lawry Coker DeSilva Architects A.I.A.

Date 4/20/80
Scale NOTED
Drawn S.VIGH
Job 85748
Sheet S-2 of 4 Sheets

DRAWING NUMBER: 7449_RefDwgs.dwg | DRAWING NUMBER: R-1 | SHEET 33 OF 64

\\Sd-data\proj\general\all Facilities\office-sites\7449_Fleet_ALW-TP\7449_RefDwgs.dwg

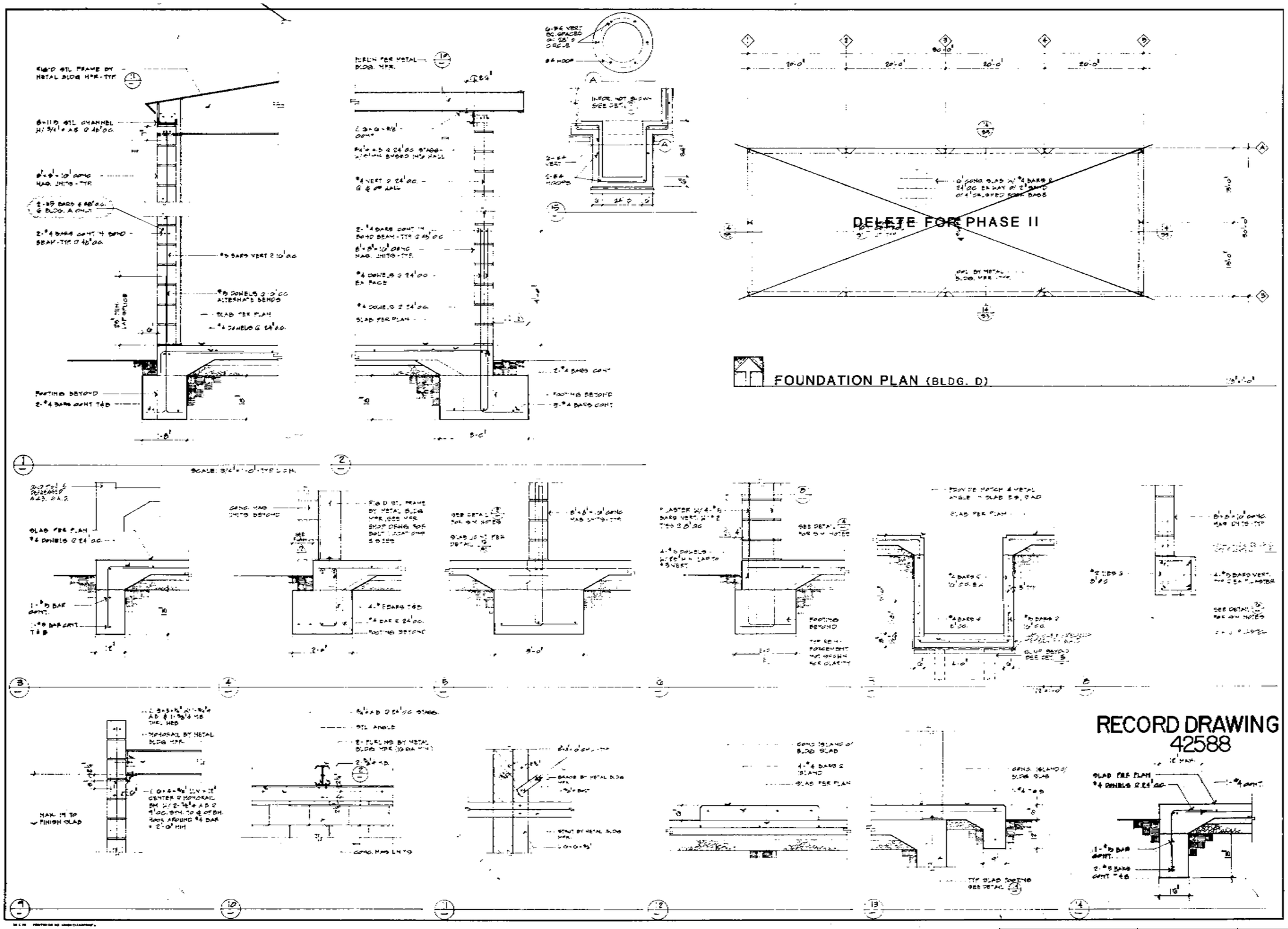

REVISIONS	BY
PLAN CHECK REVISIONS	
6-15-90	CWO

MKM ARCHITECTS
CIVIL & STRUCTURAL ENGINEERS
1111 FOURTH AVENUE - SAN RAFAEL, CALIFORNIA 94901
(707) 575-5188

WASTEWATER OPERATIONS DEPARTMENT

COUNTY OF SONOMA

SONOMA COUNTY AIRPORT

Lawry Coker DeSilva Architects A.I.A.

Date 4/30/90
Scale NOTED
Drawn S. VION
Job 89119
Sheet S-3
Of 4 Sheets

DRAWING NUMBER: 7449_RefDwgs.dwg | DRAWING NUMBER: R-2 | SHEET 34 OF 64

\\Sd-data\proj\general\all Facilities\office-sites\7449_Fleet_ALW-TP\7449_RefDwgs.dwg

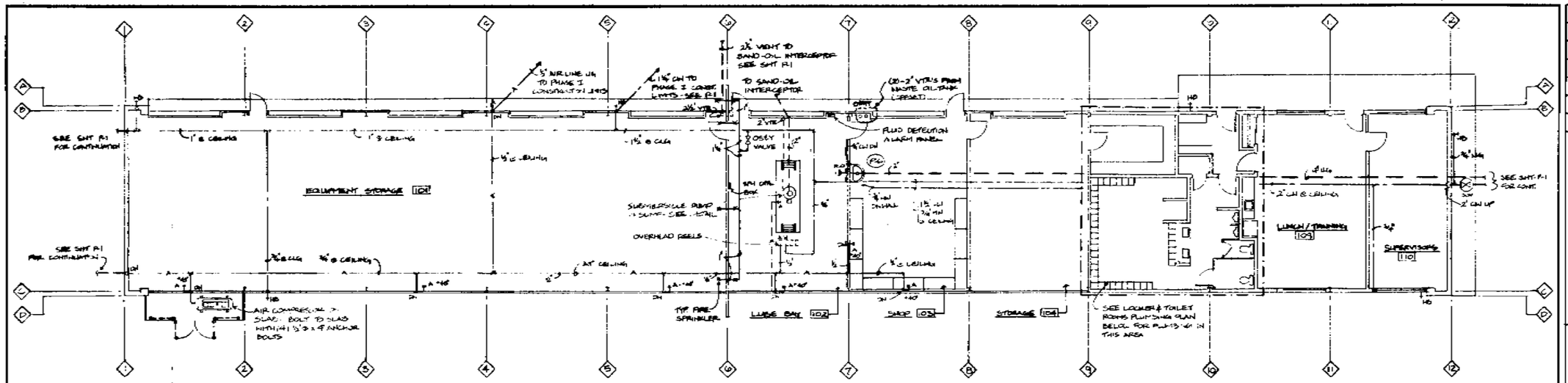

PLUMBING PLAN - BLDG. A

SCALE: 1/8" : 1'-0"

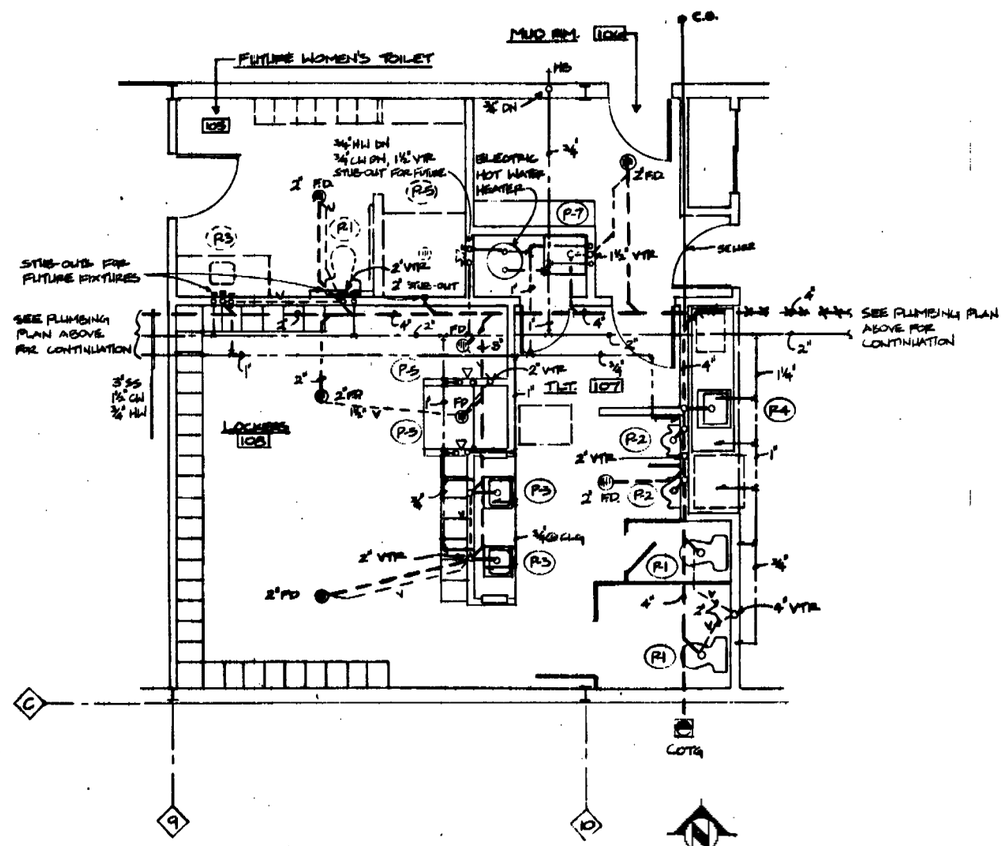

LOCKER & TOILET ROOMS PLUMBING PLAN

SCALE: 1/4" : 1'-0"

SCHEDULE OF LOCAL PLUMBING CONNECTIONS

SYM	DESCRIPTION	VENT	SOIL or WASTE	COLD WATER	HOT WATER
P-1	WATER CLOSET	2"	4"	3/4"	-
P-2	URINAL	1-1/2"	2"	3/4"	-
P-3	LAVATORY	1-1/2"	2"	1/2"	1/2"
P-4	SINK	1-1/2"	2"	1/2"	1/2"
P-5	SHOWER	1-1/2"	2"	1/2"	1/2"
P-6	WASH-UP SINK	1-1/2"	2"	3/4"	3/4"
P-7	JANITOR'S SINK	1-1/2"	2"	1/2"	1/2"
FD	FLOOR DRAIN	1-1/2"	2"	-	-
AD	AREA DRAIN	2"	23"	-	-
	HOT WATER HEATER	-	-	1"	1"
HR	HOSE REEL	-	-	1/2"	-
HB	HOSE BIB	-	-	3/4"	-

RECORD DRAWING 42591

MURAKAMI ENGINEERS
ELECTRICAL & MECHANICAL ENGINEERS
736 MAIN STREET
SANTA ROSA, CALIFORNIA 95401
TEL (707) 546-1539

REVISIONS	BY

WASTEWATER OPERATIONS DEPARTMENT

COUNTY OF SONOMA

SONOMA COUNTY AIRPORT

Lawry Coker DeSilva Architects A.I.A.

Date 4-30-86
Scale AS NOTED
Drawn LC
Job 014-85
Sheet P-2
Of Sheets

DRAWING NUMBER: 7449_RefDwgs.dwg | DRAWING NUMBER: R-3 | SHEET 35 OF 64

\\Sd-data\proj\general\all Facilities\office-sites\7449_Fleet_ALW-TPV\7449_RefDwgs.dwg

SYMBOLS LEGEND

LIGHTING

- FLUORESCENT FIXTURE, RECESSED
- RECESSED DOWN LIGHT FIXTURE
- RECESSED DIRECTIONAL FIXTURE (ARROW INDICATES AIMING)
- FLUORESCENT FIXTURE, SURFACE MOUNTED
- SURFACE, PENDANT OR OTHER FIXTURE
- FLUORESCENT FIXTURE, WALL MOUNTED
- WALL-MOUNTED HID, INCANDESCENT, OR COMPACT FLUORESCENT FIXTURE
- FLUORESCENT FIXTURE, PENDANT OR CABLE HUNG
- EXIT SIGN, SINGLE FACE WITH DIRECTIONAL ARROWS AS INDICATED
- EXIT SIGN, DOUBLE FACE WITH DIRECTIONAL ARROWS AS INDICATED
- EXIT SIGN, LOW LEVEL (LL)
- COMBINATION EXIT/EMERGENCY LIGHT FIXTURE MOUNTING HEIGHT: +8'-0" AFF, UON
- EMERGENCY FIXTURE MOUNTING HEIGHT: +8'-0" AFF, UON
- DENOTES FIXTURE CONNECTED TO EMERGENCY CIRCUIT
- OUTDOOR SITE LIGHT, POLE MOUNTED LUMINAIRE ARROW INDICATES AIMING DIRECTION, IF APPLICABLE
- BOLLARD OR POST-TOP FIXTURE

CONDUIT

- CONDUIT INSTALLED ABOVE GRADE
- CONDUIT INSTALLED UNDERGROUND OR UNDER SLAB
- EXISTING CONDUIT
- CONDUIT STUB-UP OR STUB-OUT
- FLEXIBLE CONDUIT WHIP TO LIGHT FIXTURE OR EQUIPMENT
- CONDUIT HOME RUN TO DESIGNATED PANEL, TERMINAL, OR CONTROL CABINET
  - INDICATES CIRCUIT BREAKER I.D.
  - L1-4
  - INDICATES BRANCH PANEL
  - EXAMPLES:
    - COMMA INDICATES MULTIPLE SINGLE POLE CIRCUITS: L1-6,8
    - SLASH INDICATES MULTI-POLE CIRCUIT: L1-10/12

NOTE FOR CONDUIT: THE MINIMUM CONDUIT SIZE IS 3/4".

COMMUNICATION

- CCTV CAMERA, CEILING MOUNT
- INTERCOM CALL IN SWITCH - MOUNTING HEIGHT: +48" AFF, UON
- TELEPHONE/DATA OUTLET, FLUSH TYPE UON MOUNTING HEIGHT: +18" AFF UON
  - DENOTES # OF TELEPHONE JACKS
  - DENOTES # OF DATA JACKS
- SURFACE RACEWAY WITH POWER AND TELEPHONE/DATA RECEPTACLES AS INDICATED
- CATV OUTLET - MOUNTING HEIGHT: +96" AFF UON
- AUDIO/VIDEO OUTLET - MOUNTING HEIGHT: +18" AFF UON

EQUIPMENT / DEVICE LINETYPES

- NEW EQUIPMENT (BOLD, SOLID LINETYPE)
- EXISTING EQUIPMENT, TO REMAIN IN PLACE - MAY INCLUDE NEW CIRCUITING ETC. (THIN, SOLID LINETYPE)
- EXISTING EQUIPMENT, TO BE DEMOLISHED (SCREENED, DASHED LINETYPE)

EQUIPMENT

- MAIN SWITCHBOARD
- DISTRIBUTION PANEL BOARD
- COMBINATION METER/MAIN SERVICE PANEL
- BRANCH CIRCUIT PANEL BOARD, SURFACE OR FLUSH MOUNTED (OR)
- LIGHTING CONTROL PANEL (OR)
- SIGNAL TERMINAL CABINET OR CONTROL PANEL SURFACE OR FLUSH MOUNTED (OR)
- SIGNAL TERMINAL BACKBOARD
- N30 — CONCRETE UNDERGROUND HAND HOLE (NUMBER DENOTES CHRISTY SIZE)
- T OR — TRANSFORMER

POWER

- DUPLEX RECEPTACLE, 15A 125V 2P 3W, GROUNDING TYPE, MOUNTING HEIGHT: +18" AFF UON
  - +48"
  - DENOTES HEIGHT IN INCHES AFF (INTERIOR) AFG (EXTERIOR)
- DUPLEX RECEPTACLE - SPLIT WIRED, SWITCHED
- DUPLEX RECEPTACLE - EMERGENCY POWER
- DUPLEX RECEPTACLE - CEILING MOUNTED
- FLOOR RECEPTACLE, 15A 125V 2P 3W, GROUNDING TYPE, FLUSH TYPE UON
- DOUBLE DUPLEX RECEPTACLE, 15A 125V 2P 3W, GROUNDING TYPE, MOUNTING HEIGHT: +18" AFF UON
- SINGLE RECEPTACLE, 20A 125V 2P 3W, GROUNDING TYPE, MOUNTING HEIGHT: +18" AFF UON
- SPECIAL PURPOSE RECEPTACLE AS DESIGNATED SEE 'SPECIAL SYMBOLS' ON EACH SHEET (OR)
- DUAL SERVICE RECESSED FLOOR BOX WITH DUPLEX AND DATA RECEPTACLES
- J OR J — JUNCTION BOX, CODE SIZED UON
- FLOOR JUNCTION BOX
- DISCONNECT SWITCH - FUSED WHERE APPLICABLE
- MOTOR CONNECTION
- CEILING EXHAUST FAN
- WH OR WH — WATER HEATER
- SP — SUMP PUMP
- TEST PORT
- GROUND ROD
- T — THERMOSTAT (SEE MECHANICAL DRAWINGS) MOUNTING HEIGHT: +48" AFF UON
- PUSHBUTTON

SWITCHING

- $ — LIGHT SWITCH, SPST - MOUNTING HEIGHT: +48" AFF, UON
- $2 — LIGHT SWITCH, DPST - MOUNTING HEIGHT: +48" AFF, UON
- $3 — LIGHT SWITCH, 3-WAY - MOUNTING HEIGHT: +48" AFF, UON
- $L — LOW VOLTAGE SWITCH, MOMENTARY CONTACT, 3-POS., CENTER-OFF, MOUNTING HEIGHT: +48" AFF, UON
  - DENOTES SWITCH
- $T — TIMER SWITCH - MOUNTING HEIGHT: +48" AFF, UON
- 1a — CIRCUIT AND SWITCH DESIGNATION FOR LIGHTING FIXTURE
  - DENOTES SWITCH
  - DENOTES CIRCUIT
- 6R5 — CIRCUIT AND RELAY DESIGNATION FOR LIGHTING FIXTURES (SEE CORRESPONDING LIGHTING CONTROL PANEL RELAY SCHEDULE)
  - DENOTES RELAY
  - DENOTES CIRCUIT
- D1 — DIMMER SWITCH - MOUNTING HEIGHT: +48" AFF, UON
- CS1 — OCCUPANCY SENSOR, CEILING MOUNTED, LINE VOLTAGE
- CS2 — OCCUPANCY SENSOR, CEILING MOUNTED, LOW VOLTAGE
- W1 — OCCUPANCY SENSOR, WALL MOUNTED, LINE VOLTAGE, 1-CIRCUIT - MOUNTING HEIGHT: +48" AFF, UON
- W2 — OCCUPANCY SENSOR, WALL MOUNTED, LINE VOLTAGE, 2-CIRCUIT - MOUNTING HEIGHT: +48" AFF, UON
- PC — PHOTO CONTROL SWITCH - MOUNT ON BUILDING EXTERIOR
- TC — TIME CLOCK FOR LIGHTING CONTROL

ANNOTATION

- 1 — KEYNOTE
- 1 — DEMOLITION NOTE
- 10 — RACEWAY, FEEDER OR CIRCUIT DESIGNATION (SEE SCHEDULE)
- ELEC. ROOM 101 — ROOM NAME AND NUMBER (SEE ARCHITECTURAL DRAWINGS)
- A 180 OR A — FIXTURE TYPE DESIGNATION (SEE SCHEDULE)
  - DENOTES TYPE
  - DENOTES WATTS
- 1 E5.1 — DETAIL INDICATOR
  - DETAIL NUMBER
  - SHEET NUMBER ON WHICH DETAIL APPEARS
- A E3.1 — SECTION INDICATOR
  - SECTION LETTER
  - SHEET NUMBER ON WHICH SECTION APPEARS
- WH 1 — MECHANICAL EQUIPMENT DESIGNATION (SEE SCHEDULE)

ABBREVIATIONS

(D)	DEMOLISH
(E)	EXISTING
(F)	FUTURE
(N)	NEW
A	AMPERES
AC	ALTERNATING CURRENT
AF	AMP FRAME
AFF	ABOVE FINISHED FLOOR
AFG	ABOVE FINISHED GRADE
AHU	AIR HANDLING UNIT
AIC	AMPS INTERRUPTING CAPACITY
ANN	ANNUNCIATOR
ATS	AUTOMATIC TRANSFER SWITCH
AWG	AMERICAN WIRE GAUGE
BAT	BATTERY
BFG	BELOW FINISH GRADE
CATV	CABLE TELEVISION
C	CONDUIT
CB	CIRCUIT BREAKER
CCTV	CLOSED CIRCUIT TELEVISION
CO	CONDUIT ONLY
CPT	CONTROL POWER TRANSFORMER
CT	CURRENT TRANSFORMER
CU	COPPER
DC	DIRECT CURRENT
EF	EXHAUST FAN
EGU	ENGINE GENERATOR UNIT
EM	EMERGENCY
EMT	ELECTRICAL METALLIC CONDUIT
ENT	ELECTRICAL NON-METALLIC CONDUIT
FA	FIRE ALARM
FACP	FIRE ALARM CONTROL PANEL
FC	FAN COIL
FU	FUSE
GND	GROUND
GFCI	GROUND FAULT CIRCUIT INTERRUPTER
GFI	GROUND FAULT INTERRUPTER
GFR	GROUND FAULT RELAY
HID	HIGH INTENSITY DISCHARGE
HP	HORSEPOWER
HPS	HIGH PRESSURE SODIUM
HVAC	HEATING, VENTILATION & AIR-CONDITIONING
IDF	INTERMEDIATE DISTRIBUTION FACILITY
IG	ISOLATED GROUND
J, JB	JUNCTION BOX
KAIC	KILO-AMPS INTERRUPTING CAPACITY
KV	KILOVOLT
KVA	KILOVOLT-AMP
KW	KILOWATT
KWH	KILOWATT-HOUR
LV	LOW VOLTAGE
MCB	MAIN CIRCUIT BREAKER
MCC	MOTOR CONTROL CENTER
MCP	MOTOR CIRCUIT PROTECTOR
MDF	MAIN DISTRIBUTION FACILITY
MFR	MANUFACTURER
MH	METAL HALIDE
MLO	MAIN LUGS ONLY
MV	MEDIUM VOLTAGE
NIC	NOT IN CONTRACT
NL	NIGHT LIGHT
NTS	NOT TO SCALE
OC	ON CENTER
PA	PUBLIC ADDRESS
PT	POTENTIAL TRANSFORMER
PVC	POLYVINYL CHLORIDE
PB	PULL BOX, ELECTRICAL
RECPT	RECEPTACLE, OUTLET
RGS	RIGID GALVANIZED STEEL
RVSS	REDUCED VOLTAGE SOFT START
RTU	REMOTE TERMINAL UNIT
TV	TELEVISION MONITOR (SET)
TVSS	TRANS. VOLT. SURGE SUPPRESSOR
UF	UNDER FLOOR
UG	UNDERGROUND
UON	UNLESS OTHERWISE NOTED
UPS	UNINTERRUPTIBLE POWER SUPPLY
V	VOLT
VA	VOLT-AMP
VFD	VARIABLE FREQUENCY DRIVE
WP	WEATHERPROOF
XFMR	TRANSFORMER

INDEX OF ELECTRICAL DRAWINGS

SHEET NO.	DESCRIPTION
E-001	ELECTRICAL SYMBOLS LEGEND AND INDEX
E-101	ELECTRICAL SITE PLAN
E-211	SERVICE CENTER DEMOLITION PLAN
E-212	SERVICE CENTER POWER & SIGNAL PLAN
E-213	EXISTING SERVICE CENTER LIGHTING PLAN
E-221	NEW FLEET CENTER POWER PLAN
E-222	NEW FLEET CENTER LIGHTING PLAN
E-223	NEW FLEET CENTER FIRE & SECURITY PLAN
E-401	(E) SWITCHBOARD REPLACEMENT
E-501	ELECTRICAL DETAILS - 1
E-502	ELECTRICAL DETAILS - 2
E-601	ELECTRICAL SINGLE LINE DIAGRAM
E-602	ELECTRICAL SCHEDULES - 1
E-603	ELECTRICAL SCHEDULES - 2
E-604	ELECTRICAL SCHEDULES - 3
E-605	ELECTRICAL SCHEDULES - 4
E-606	FIRE ALARM RISER & DETAILS
E-701	TITLE 24 DOCUMENTATION - 1
E-702	TITLE 24 DOCUMENTATION - 2

REGISTERED PROFESSIONAL ENGINEER CHRISTOPHER A. KELLY No. E17660 Exp. 9/30/11 ELECTRICAL STATE OF CALIFORNIA

WINZLER & KELLY

NO.	DATE	REVISION	BY

SONOMA COUNTY WATER AGENCY

SCALE: NONE
DATE: 5/25/2011
DRAWN: SMG
REVIEWED:

SERVICE CENTER RELOCATION (2025 AVIATION BOULEVARD)

ELECTRICAL SYMBOLS LEGEND AND INDEX

02243-10-002

FILE NAME: 7449_E-001.dwg
CONTRACT NUMBER: 0-706-7 #01

DRAWING NUMBER: E-001

SHEET 36 OF 64

J:\02243 - SCWA\02243-10-002 SCWA Airport Service Center\CAD 02243-10-002\dwg\7449_E-001.dwg 06-06-11 01:12:47PM sgirard

REUSE OF DOCUMENTS: This document and the ideas and designs incorporated herein, as an instrument of professional service, is the property of Winzler & Kelly and shall not be reused in whole or in part for any other project without Winzler & Kelly's written authorization. © 2010 Winzler & Kelly

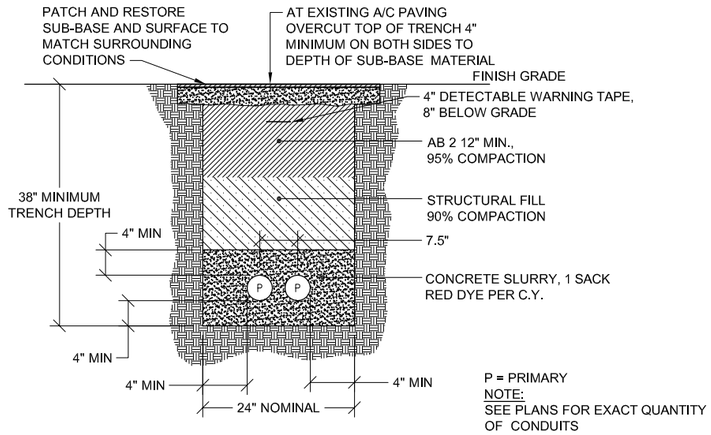

1 TYPICAL TRENCH - PRIMARY UTILITIES

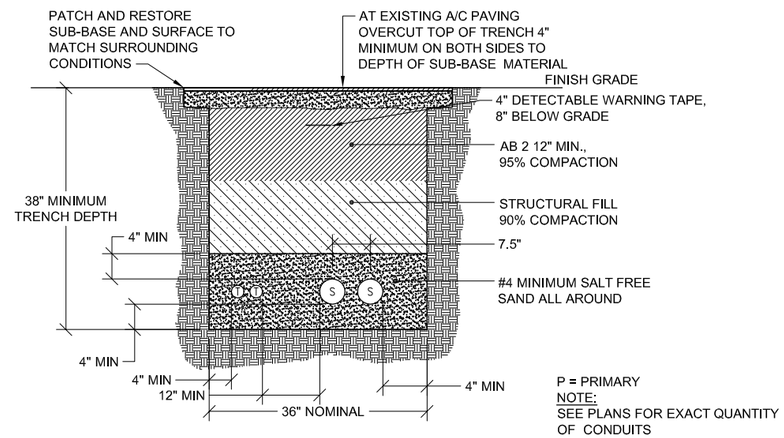

2 TYPICAL TRENCH - SECONDARY UTILITIES

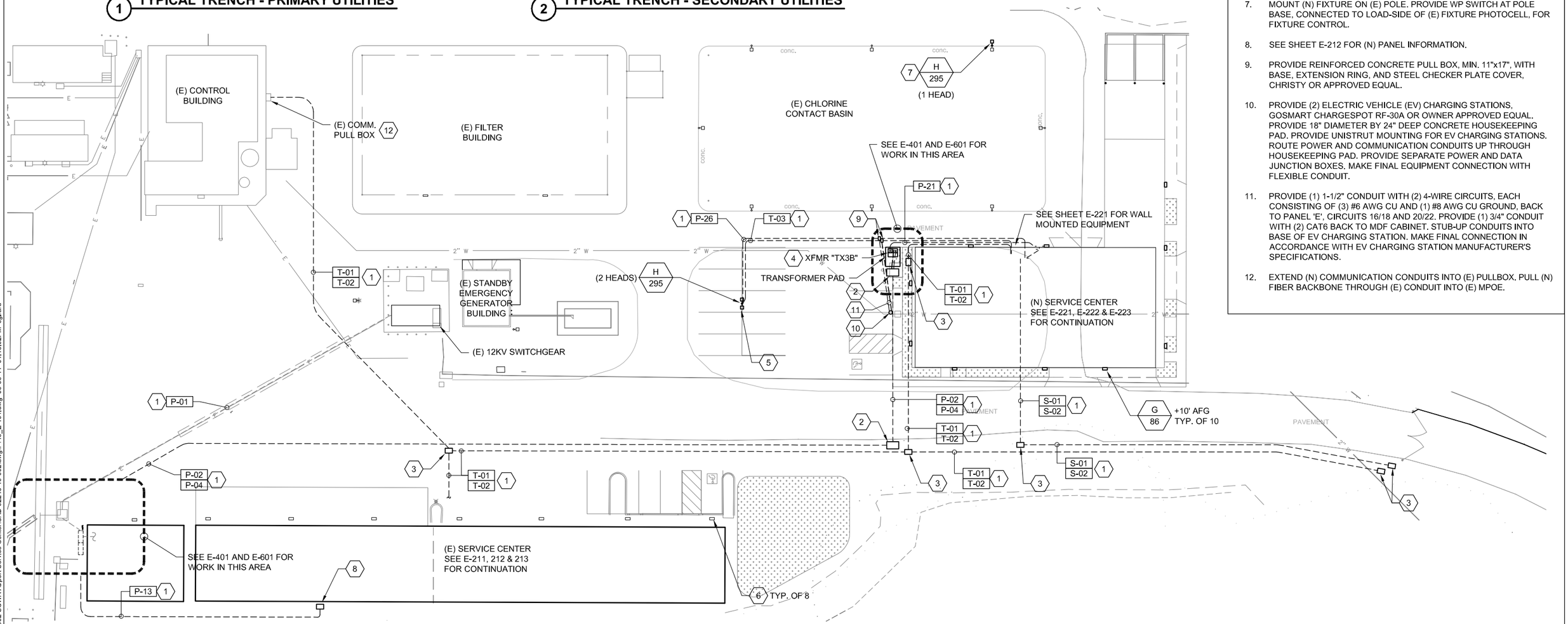

SHEET GENERAL NOTES

1. SEE E-601 FOR SINGLE LINE DIAGRAM.
2. SEE SHEET E-604 FOR SCHEDULES.

KEYNOTES

1. PROVIDE CONDUIT AND CABLE AS INDICATED.
2. PROVIDE PRECAST CONCRETE PULL BOX, MIN. 48"x72"x48" DEEP, WITH BASE, EXTENSION RING, AND STEEL CHECKER PLATE COVER.
3. PROVIDE H-20 REINFORCED CONCRETE PULL BOX, MIN. 24"x36", WITH BASE, EXTENSION RING, AND STEEL CHECKER PLATE COVER, CHRISTY OR APPROVED EQUAL.
4. PROVIDE TRANSFORMER AS INDICATED ON THE SINGLE LINE DIAGRAM. PROVIDE CONCRETE EQUIPMENT PAD PER 1/E-502.
5. PROVIDE POLE MOUNT LIGHT FIXTURE COMPLETE WITH POLE AND CONCRETE POLE BASE PER 5/E-501.
6. SEE E-212 FOR WORK ON (E) BUILDING EXTERIOR LIGHTING.
7. MOUNT (N) FIXTURE ON (E) POLE. PROVIDE WP SWITCH AT POLE BASE, CONNECTED TO LOAD-SIDE OF (E) FIXTURE PHOTOCELL, FOR FIXTURE CONTROL.
8. SEE SHEET E-212 FOR (N) PANEL INFORMATION.
9. PROVIDE REINFORCED CONCRETE PULL BOX, MIN. 11"x17", WITH BASE, EXTENSION RING, AND STEEL CHECKER PLATE COVER, CHRISTY OR APPROVED EQUAL.
10. PROVIDE (2) ELECTRIC VEHICLE (EV) CHARGING STATIONS, GOSMART CHARGESPOT RF-30A OR OWNER APPROVED EQUAL. PROVIDE 18" DIAMETER BY 24" DEEP CONCRETE HOUSEKEEPING PAD. PROVIDE UNISTRUT MOUNTING FOR EV CHARGING STATIONS. ROUTE POWER AND COMMUNICATION CONDUITS UP THROUGH HOUSEKEEPING PAD. PROVIDE SEPARATE POWER AND DATA JUNCTION BOXES. MAKE FINAL EQUIPMENT CONNECTION WITH FLEXIBLE CONDUIT.
11. PROVIDE (1) 1-1/2" CONDUIT WITH (2) 4-WIRE CIRCUITS, EACH CONSISTING OF (3) #6 AWG CU AND (1) #8 AWG CU GROUND, BACK TO PANEL 'E', CIRCUITS 16/18 AND 20/22. PROVIDE (1) 3/4" CONDUIT WITH (2) CAT6 BACK TO MDF CABINET. STUB-UP CONDUITS INTO BASE OF EV CHARGING STATION. MAKE FINAL CONNECTION IN ACCORDANCE WITH EV CHARGING STATION MANUFACTURER'S SPECIFICATIONS.
12. EXTEND (N) COMMUNICATION CONDUITS INTO (E) PULLBOX. PULL (N) FIBER BACKBONE THROUGH (E) CONDUIT INTO (E) MPOE.

0 10' 20' 40'

N

REGISTERED PROFESSIONAL ENGINEER CHRISTOPHER A. BAILEY No. E17660 Exp. 9/30/11 ELECTRICAL STATE OF CALIFORNIA

WINZLER & KELLY

NO.	DATE	REVISION	BY

SONOMA COUNTY WATER AGENCY

SCALE: 1"=20'
DATE: 5/25/2011
DRAWN: SMG
REVIEWED:

SERVICE CENTER RELOCATION (2025 AVIATION BOULEVARD)

ELECTRICAL SITE PLAN

02243-10-002

FILE NAME: 7449_E-101.dwg
CONTRACT NUMBER: 0-706-7 #01

DRAWING NUMBER: E-101

SHEET 37 OF 64

J:\02243 - SCWA\02243-10-002 SCWA Airport Service Center\CAD 02243-10-002\dwg\7449_E-101.dwg 06-06-11 01:13:02PM sgilrand

REUSE OF DOCUMENTS; This document and the ideas and designs incorporated herein, as an instrument of professional service, is the property of Winzler & Kelly and shall not be reused in whole or in part for any other project without Winzler & Kelly's written authorization. © 2010 Winzler & Kelly

KEYNOTES

1. (E) LIGHT FIXTURES IN THIS AREA TO REMAIN.

DEMOLITION NOTES

1. DISCONNECT AND REMOVE (E) SUMP PUMP CONTROL PANEL AND APPURTENANCES.
2. DISCONNECT AND REMOVE (E) LEAK DETECTION PANEL. REMOVE POWER CONDUIT & WIRING BACK TO RECEPTACLE BELOW.
3. SEE SINGLE LINE DIAGRAM ON E-601 FOR MODIFICATIONS TO (E) PANEL.
4. DISCONNECT AND REMOVE (E) HVAC UNIT POWER CIRCUIT. MARK (E) BREAKER "SPARE"

SHEET GENERAL NOTES

1. CONTRACTOR TO DETERMINE EXTENT OF (E) CONDUIT AND WIRING SUITABLE FOR REUSE. SEE LIGHTING PLAN AND POWER PLAN FOR ADDITIONAL INFORMATION.
2. ALL FINISHES REMOVED FOR INSTALLATION OF ELECTRICAL WORK SHALL BE REPLACED TO MATCH EXISTING.
3. DISCONNECT AND REMOVE ELECTRICAL ITEMS ON THIS PLAN DENOTED BY THE DEMOLITION LINETYPE (DASHED). IDENTIFY AND PRESERVE EXISTING CONDUIT, WIRING, JUNCTION BOXES, ETC. WHICH MAY BE REUSED TO FEED (N) LIGHTING FIXTURES AND DEVICES. REMOVE CONDUIT, WIRING, ETC. THAT SERVE THE DEMOLISHED ITEMS AND WILL NOT BE REUSED. ALSO REMOVE CONDUIT, WIRING, ETC. WHICH MAY NOT NECESSARILY BE INDICATED ON THE DRAWINGS THAT IS IN THE PATH OF DEMOLITION OR NEW CONSTRUCTION.

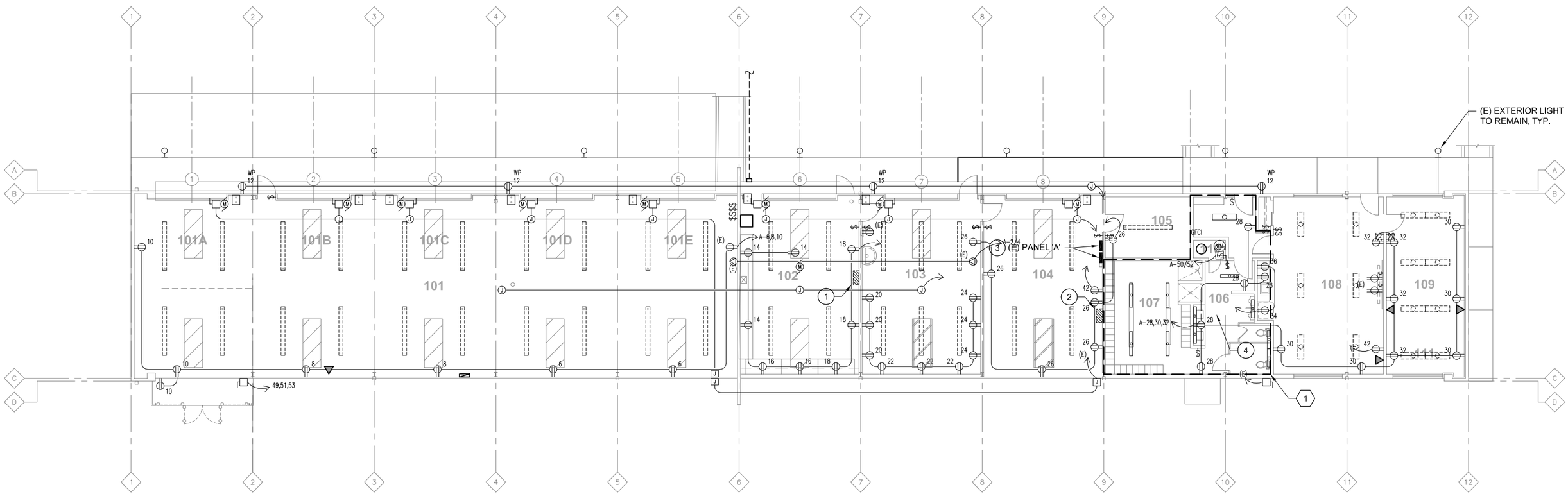

0 4' 8' 16'

N

REGISTERED PROFESSIONAL ENGINEER CHRISTOPHER A. WINZLER No. E17660 Exp. 9/30/11 ELECTRICAL STATE OF CALIFORNIA

WINZLER & KELLY

NO.	DATE	REVISION	BY

SONOMA COUNTY WATER AGENCY

SCALE: 1/8"=1'-0"
DATE: 5/25/2011
DRAWN: SMG
REVIEWED:

SERVICE CENTER RELOCATION (2025 AVIATION BOULEVARD)

SERVICE CENTER DEMOLITION PLAN

02243-10-002

FILE NAME: 7449_E-211.dwg
CONTRACT NUMBER: 0-706-7 #01

DRAWING NUMBER: E-211

SHEET 38 OF 64

I:\02243 - SCWA\02243-10-002 SCWA Airport Service Center\CAD 02243-10-002\dwg\7449_E-211.dwg 06-06-11 01:13:08PM sgirard

REUSE OF DOCUMENTS; This document and the ideas and designs incorporated herein, as an instrument of professional service, is the property of Winzler & Kelly and shall not be reused in whole or in part for any other project without Winzler & Kelly's written authorization. © 2010 Winzler & Kelly

SHEET SPECIAL SYMBOLS

CR — CARD READER LOCATION. PROVIDE 2-GANG J-BOX WITH WEATHER PROOF COVER IN EXTERIOR WALL. PROVIDE ¾" CONDUIT FROM BOX TO SECURITY ACCESS EQUIPMENT LOCATION.

MS — MOTION SENSOR LOCATION. PROVIDE 2-GANG J-BOX WITH COVER AT 6" BELOW ELEVATION OF FINISHED CEILING. PROVIDE ¾" CONDUIT FROM BOX TO SECURITY ACCESS EQUIPMENT LOCATION.

KEYNOTES

1. PROVIDE (N) WALL MOUNT, NEMA 1 PANEL BOARD COMPLETE WITH RATINGS, CIRCUITS AND ACCESSORIES SHOWN IN THE PANEL SCHEDULE.
2. PROVIDE POWER CIRCUIT AND DISCONNECT FOR EQUIPMENT. SEE EQUIPMENT SCHEDULE FOR CIRCUIT MAKEUP AND CONDUIT SIZE. COORDINATE EXACT EQUIPMENT LOCATION IN FIELD WITH OWNER.
3. PROVIDE SURFACE RACEWAY WITH SEPARATE POWER AND DATA, WIREMOLD 5400 OR EQUAL, AT +6" ABOVE COUNTER. PROVIDE DUPLEX POWER AND DATA EVERY 36".
4. PROVIDE MINIMUM 6' OF FLEXIBLE CONDUIT FOR FINAL CONNECTION TO EQUIPMENT ON FLOOR. COORDINATE EXACT PLACEMENT OF EQUIPMENT WITH OWNER IN FIELD.
5. INSPECT (E) BREAKER, CONDUIT, FEEDER AND CONTROLS TO (E) DEVICE. MAKE REPAIRS AS REQUIRED TO RESTORE OPERATION.
6. PROVIDE WALL MOUNT IDF CABINET 8' A.F.F. PROVIDE 24" x 24" x 1/2" PLYWOOD BACKBOARD ADJACENT TO CABINET. PROVIDE PATCH PANELS IN CABINET FOR TERMINATION OF BUILDING DATA CABLING.
7. PROVIDE 1"C BACK TO IDF CABINET FOR DATA.
8. TURN UP CONDUITS AT BUILDING AND RUN UP WALL. PROVIDE 10"x10"x8" NEMA 3R JUNCTION BOX AT +12' AFG. CORE DRILL BEHIND JUNCTION BOX AND CONTINUE CONDUITS TO IDF RACK.
9. PROVIDE DATA RECEPTACLE WITH (2) DEDICATED BLACK DATA JACKS FOR DESK RADIOS. PROVIDE (2) BLACK CAT6 CABLES IN 3/4" CONDUIT BACK TO IDF RACK. COORDINATE FINAL EQUIPMENT CONNECTION WITH OWNER IN FIELD.

SHEET GENERAL NOTES

1. MAINTAIN POWER TO ALL (E) RECEPTACLES AND DEVICES THAT REMAIN.
2. CIRCUIT NUMBERS REFER TO PANEL 'A', U.O.N.
3. CIRCUIT NUMBERS SHOWN FOR (E) DEVICES ARE BASED ON AVAILABLE RECORD DRAWINGS. VERIFY ACTUAL CIRCUITS IN FIELD. UPDATE PANEL SCHEDULES AS NECESSARY AND PROVIDE NEW LABELS ON RECEPTACLE COVERS INDICATING CIRCUIT.
4. MOUNT ALL (N) ELECTRICAL EQUIPMENT AND DEVICES A MINIMUM OF +24" AFF.
5. FOR CEILING MOUNTED AND OVERHEAD FEED DEVICES, EXTEND POWER CIRCUIT DOWN TO DEVICE. PROVIDE RGS CONDUIT FOR VERTICAL SECTIONS AND SUPPORT PER NEC.

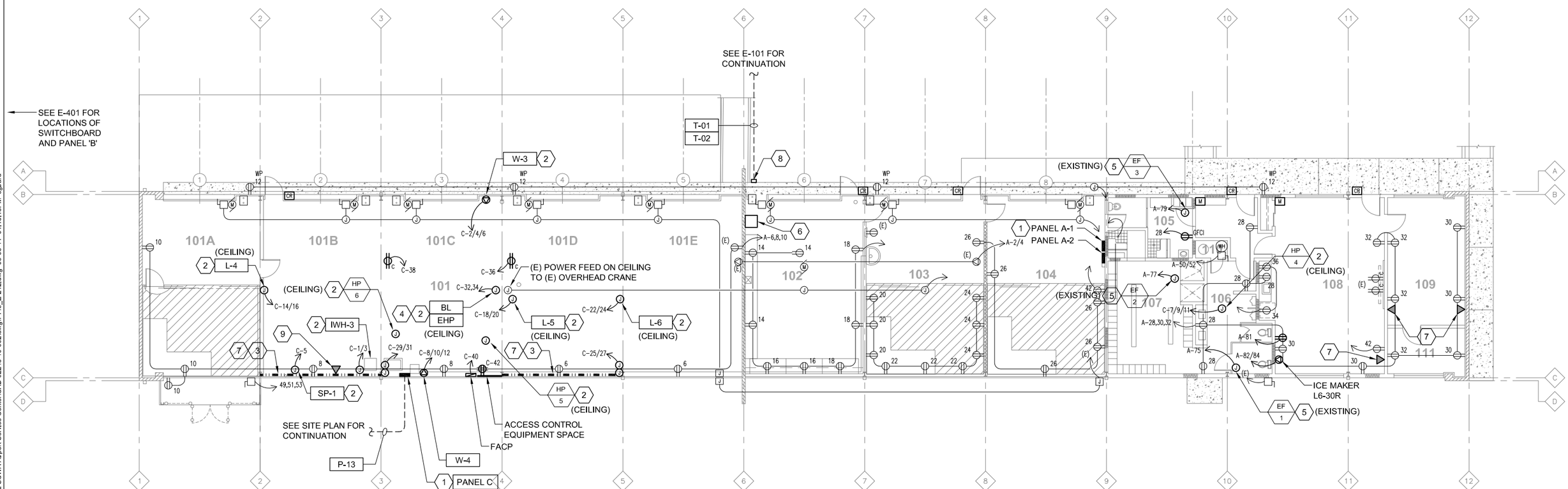

0 4' 8' 16'

REGISTERED PROFESSIONAL ENGINEER CHRISTOPHER A. KELLY No. E17660 Exp. 9/30/11 ELECTRICAL STATE OF CALIFORNIA

WINZLER & KELLY

NO.	DATE	REVISION	BY

SONOMA COUNTY WATER AGENCY

SCALE: 1/8"=1'-0" DATE: 5/25/2011
DRAWN: SMG
REVIEWED:

SERVICE CENTER RELOCATION (2025 AVIATION BOULEVARD)

SERVICE CENTER POWER & SIGNAL PLAN

02243-10-002

FILE NAME: 7449_E-212.dwg
CONTRACT NUMBER: 0-706-7 #01

DRAWING NUMBER: E-212

SHEET 39 OF 64

J:\02243 - SCWA\02243-10-002 SCWA Airport Service Center\CAD 02243-10-002\dwg\7449_E-212.dwg 06-06-11 01:13:13PM sgiardi

REUSE OF DOCUMENTS: This document and the ideas and designs incorporated herein, as an instrument of professional service, is the property of Winzler & Kelly and shall not be reused in whole or in part for any other project without Winzler & Kelly's written authorization. © 2010 Winzler & Kelly

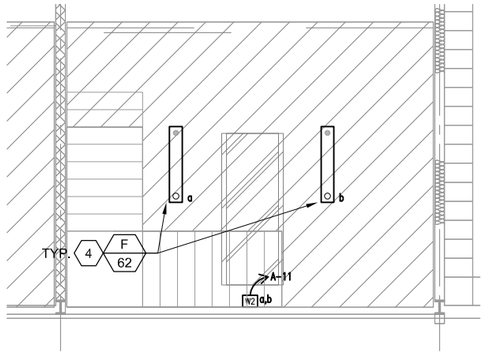

A ABOVE MEZZANINE - TYPICAL LIGHTING PLAN

SCALE: 1/4" = 1'-0"

SHEET SPECIAL SYMBOLS

- $L — LOW VOLTAGE DATA LINE SWITCH
- WZ — WALL OCCUPANCY SENSOR, LINE VOLTAGE, DUAL RELAY, DUAL TECHNOLOGY
- CS2 — CEILING OCCUPANCY SENSOR, LOW VOLTAGE, DUAL TECHNOLOGY, SINGLE RELAY
- PP2 — INTELLIGENT POWER PACK, DUAL RELAY
- PC — EXTERIOR PHOTOCELL
- DS — DAYLIGHT SENSOR

SHEET GENERAL NOTES

1. COORDINATE FIXTURE MOUNTING IN SHOP BAYS WITH O/H CRANE AND VEHICLE LIFTS TO AVOID CONFLICT.
2. POWER CIRCUIT NUMBERS REFER TO PANEL A, U.O.N.
3. SEE SHEET E-222 FOR TYPICAL OCCUPANCY SENSOR AND POWER PACK WIRING DIAGRAM.

KEYNOTES

1. CLEAN (E) FIXTURE LENS, REPLACE BALLAST(S) AND RELAMP.
2. NOT USED
3. MOUNT FIXTURES BELOW MEZZANINE.
4. MOUNT FIXTURES ABOVE MEZZANINE. ADJUST MOUNTING HEIGHT TO MAXIMIZE CLEARANCE BELOW AND AVOID CONFLICT.
5. INSTALL PHOTOCELL PER MANUFACTURER'S INSTRUCTIONS.
6. PROVIDE TRIM SUITABLE FOR WET LOCATION.
7. CONFIGURE DAYLIGHT SENSOR TO AUTOMATICALLY TURN OFF 50% OF THE LIGHTING ('H' FIXTURES) WHEN AVERAGE LIGHT LEVEL EXCEEDS 40 FOOT CANDLES. CONNECT POWER PACK TO LCP-1 RELAY 8 (POWER CIRCUIT 5) AND CONFIGURE FOR TIMECLOCK SHUTOFF WITH LOCAL SWITCH OVERRIDE.

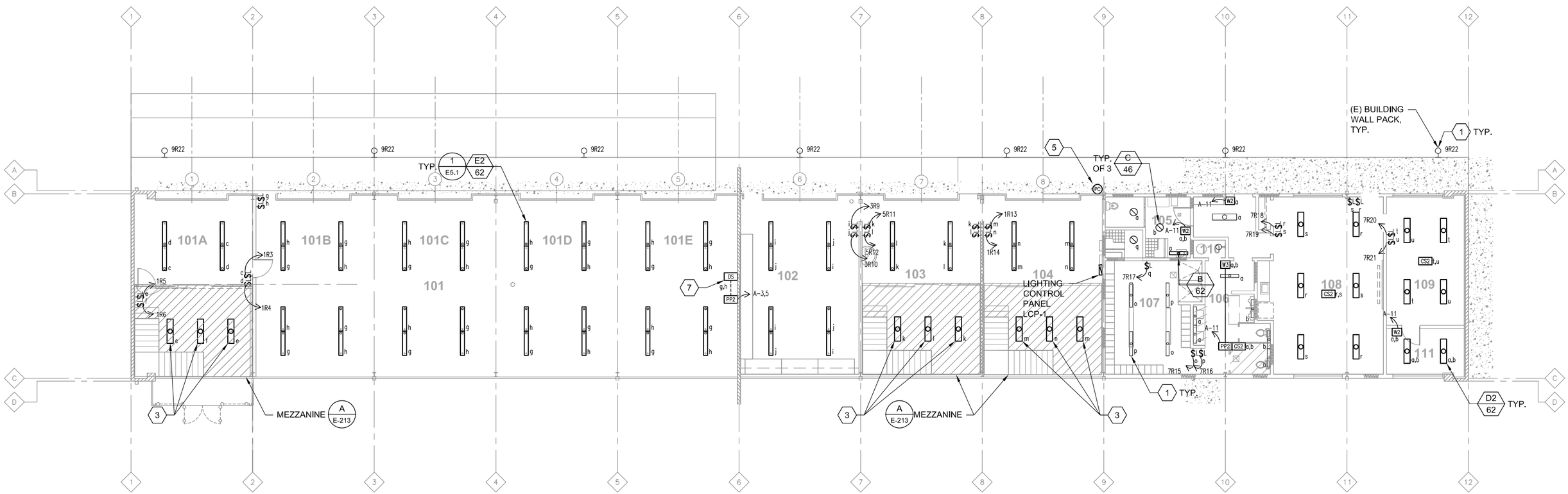

0 4' 8' 16'

N

REGISTERED PROFESSIONAL ENGINEER CHRISTOPHER A. SHELLHAMER No. E17660 Exp. 9/30/11 ELECTRICAL STATE OF CALIFORNIA

WINZLER & KELLY

NO.	DATE	REVISION	BY

SONOMA COUNTY WATER AGENCY

SCALE: 1/8"=1'-0"
DATE: 5/25/2011
DRAWN: SMG
REVIEWED:

SERVICE CENTER RELOCATION (2025 AVIATION BOULEVARD)

EXISTING SERVICE CENTER LIGHTING PLAN

02243-10-002

FILE NAME: 7449_E-213.dwg
CONTRACT NUMBER: 0-706-7 #01

DRAWING NUMBER: E-213

SHEET 40 OF 64

J:\02243 - SCWA\02243-10-002 SCWA Airport Service Center\CAD 02243-10-002\dwg\7449_E-213.dwg 06-06-11 01:13:27PM sgirard

REUSE OF DOCUMENTS; This document and the ideas and designs incorporated herein, as an instrument of professional service, is the property of Winzler & Kelly and shall not be reused in whole or in part for any other project without Winzler & Kelly's written authorization. © 2010 Winzler & Kelly

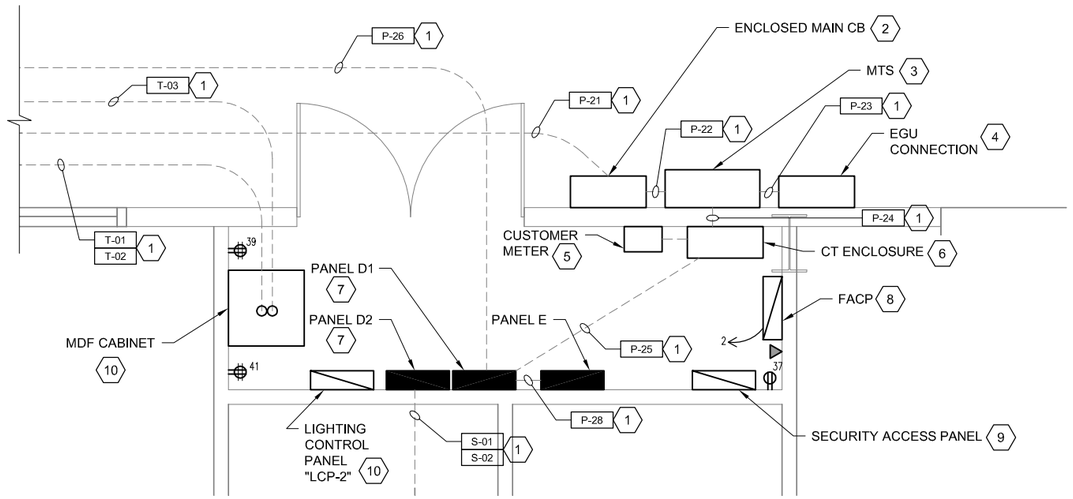

1/2"=1'-0" 0 1' 2' 4'

2 ELECTRICAL ROOM - ENLARGED PLAN

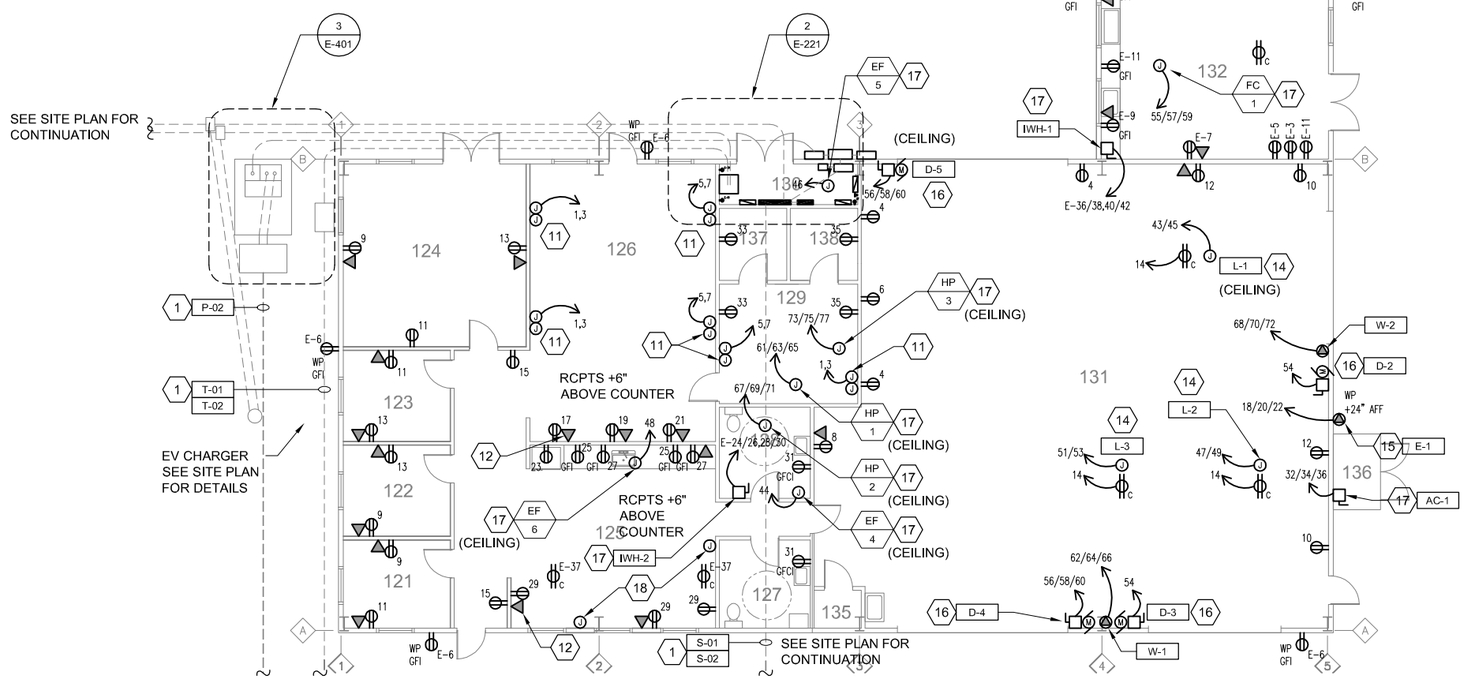

1/8"=1'-0" 0 4' 8' 16'

1 NEW SERVICE CENTER - POWER PLAN

SHEET GENERAL NOTES

1. MOUNT POWER AND DATA RECEPTACLES 24"AFF UON.
2. POWER RECEPTACLES CONSIST OF A 20 AMP COMMERCIAL GRADE DUPLEX RECEPTACLE, BACKBOX, AND NYLON COVER. PROVIDE (3) #12 IN ¾" C. BETWEEN RECEPTACLE AND INDICATED CIRCUIT. COMBINE CIRCUITS IN CONDUIT WHERE PRACTICAL AND ACCORDING TO NEC FILL AND DERATING REQUIREMENTS.
3. DATA RECEPTACLES CONSIST OF A 4-JACK FACEPLATE, JACKS, BACKBOX AND COVER, 1¼" CONDUIT TO CEILING SPACE. PROVIDE (3) CAT 6 CABLES PER JACK IN CEILING SPACE BACK TO BUILDING IDF. BUNDLE AND SUPPORT CABLES WITH CABLE TRAY IN CEILING SPACE.
4. CIRCUIT NUMBERS REFER TO PANEL D, U.O.N.
5. PROVIDE DISCONNECTS FOR MECHANICAL SHOP EQUIPMENT AS SHOWN ON THE EQUIPMENT SCHEDULES.
6. PROVIDE (1) 3/4"C FROM EACH AIR HANDLING UNIT OVER 2,000CFM BACK TO FACP FOR DUCT SMOKE DETECTOR AND (1) 3/4"C BACK TO PANEL D, CIRCUIT #41 FOR FIRE SMOKE DAMPERS.
7. PROVIDE A DEDICATED 20A CIRCUIT WITH (3) #12 AWG CU BACK TO PANEL 'D2' CIRCUIT 79 FOR MECHANICAL CONTROL PANEL. COORDINATE LOCATION WITH MECHANICAL.

KEYNOTES

1. PROVIDE FEEDERS AS INDICATED. SEE SITE PLAN AND SCHEDULES.
2. PROVIDE WALL MOUNT MAIN CIRCUIT BREAKER DISCONNECT IN NEMA 3R ENCLOSURE. SEE SINGLE LINE FOR RATING AND GROUNDING PROVISIONS.
3. PROVIDE WALL MOUNT MTS IN NEMA 3R ENCLOSURE. SEE SINGLE LINE FOR CONNECTIONS AND RATINGS.
4. PROVIDE WALL MOUNT, NEMA 3R GENERATOR CAM-LOCK CONNECTION ENCLOSURE. SEE SINGLE LINE FOR RATINGS AND MODEL.
5. PROVIDE ENCLOSED CUSTOMER METER AS SHOWN ON THE SINGLE LINE DIAGRAM.
6. PROVIDE CT ENCLOSURE COMPLETE WITH CT MOUNTING ACCESSORIES, CT'S TO MATCH CUSTOMER METER, AND INTERCONNECTION WIRING.
7. PROVIDE PANELBOARD WITH BREAKERS, RATINGS AND ACCESSORIES AS INDICATED ON THE PANEL SCHEDULES AND SINGLE LINE DIAGRAM.
8. PROVIDE FACP, SEE SHEET E-223 FOR ADDITIONAL INFORMATION. PROVIDE INDICATED POWER CIRCUIT.
9. PROVIDE SECURITY ACCESS PANEL AND TIE TO ADJACENT POWER CIRCUIT. SEE SPECIFICATIONS FOR SECURITY PANEL DETAILS AND SECURITY DEVICES. SEE E-223 FOR DEVICE LOCATIONS.
10. PROVIDE LIGHTING CONTROL PANEL ADJACENT TO PANEL D2. PROVIDE CLOSE NIPPLES OR WIREWAY FOR CIRCUITS BETWEEN D2 AND LCP2.
11. PROVIDE POWER AND DATA J-BOXES IN WALL 24" AFF FOR FURNITURE WHIP CONNECTIONS. PROVIDE INDICATED POWER CIRCUITS IN 1 J-BOX AND PROVIDE (3) CAT-6 IN SECOND. EXTEND POWER AND DATA CIRCUITS TO THEIR DESTINATIONS IN THE SAME MANNER AS REGULAR RECEPTACLES.
12. SPECIAL DATA RECEPTACLE WITH NORMAL CONNECTIONS AND (1) ADDITIONAL BLACK JACK AND BLACK CAT-6 TO IDF FOR DESK RADIO.
13. IRRIGATION CONTROLLER CIRCUIT.
14. PROVIDE CEILING J-BOX FOR VEHICLE LIFT AT EACH BAY (TOTAL OF 3). SEE EQUIPMENT SCHEDULES FOR CIRCUIT AND DISCONNECT.
15. PROVIDE 40 AMP TWIST LOCK FOR VEHICLE EMISSIONS DEVICE. SEE EQUIPMENT SCHEDULE FOR CIRCUIT AND DISCONNECT.
16. PROVIDE POWER CIRCUIT AND DISCONNECT FOR ROLL UP DOOR MOTOR. SEE EQUIPMENT SCHEDULE.
17. PROVIDE POWER CIRCUIT AND DISCONNECT AS NOTED ON THE EQUIPMENT SCHEDULES.
18. PROVIDE SINGLE GANG BACKBOX WITH BLANK COVER AT 48" AFF. PROVIDE 1-1/4" CONDUIT FROM BOX TO CEILING SPACE.

REGISTERED PROFESSIONAL ENGINEER CHRISTOPHER A. KELLY No. E17660 Exp. 9/30/11 ELECTRICAL STATE OF CALIFORNIA

WINZLER & KELLY

NO.	DATE	REVISION	BY

SONOMA COUNTY WATER AGENCY

SCALE: 1/8"=1'-0" DATE: 5/25/2011
DRAWN: SMG
REVIEWED:

SERVICE CENTER RELOCATION (2025 AVIATION BOULEVARD)
NEW SERVICE CENTER
POWER PLAN

02243-10-002
FILE NAME: 7449_E-221.dwg
CONTRACT NUMBER: 0-706-7 #01
DRAWING NUMBER: E-221
SHEET 41 OF 64

J:\02243 - SCWA\02243-10-002 SCWA Airport Service Center\CAD 02243-10-002\dwg\7449_E-221.dwg 06-06-11 01:13:33PM sgirard

REUSE OF DOCUMENTS: This document and the ideas and designs incorporated herein, as an instrument of professional service, is the property of Winzler & Kelly and shall not be reused in whole or in part for any other project without Winzler & Kelly's written authorization. © 2010 Winzler & Kelly

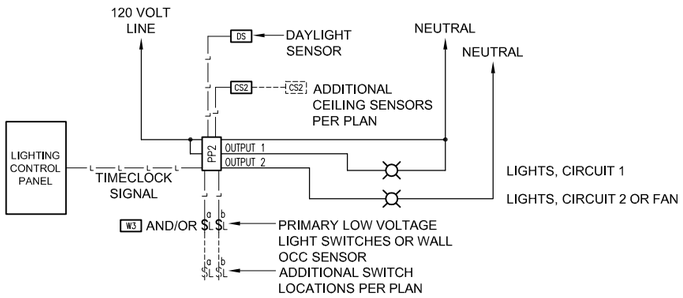

NOTES:

SET OCCUPANCY SENSOR TO STANDARD OCCUPANCY LOGIC, 10 MINUTE TIME DELAY, LED ENABLED, PIR SENSITIVITY MAX.

SET POWER PACK TO AUTO-ON MODE.

SET POWER PACK TO AUTOMATICALLY SHUT OFF 50% OF THE AREA LIGHTING WHEN THE DAYLIGHT SENSOR INDICATES A LIGHT LEVEL OVER 40FC AT THE WORK SURFACE.

OCCUPANCY SENSOR WIRING, 2-CIRCUIT POWER PACK LIGHT AND FAN AT DIFFERENT VOLTAGES

NOT TO SCALE

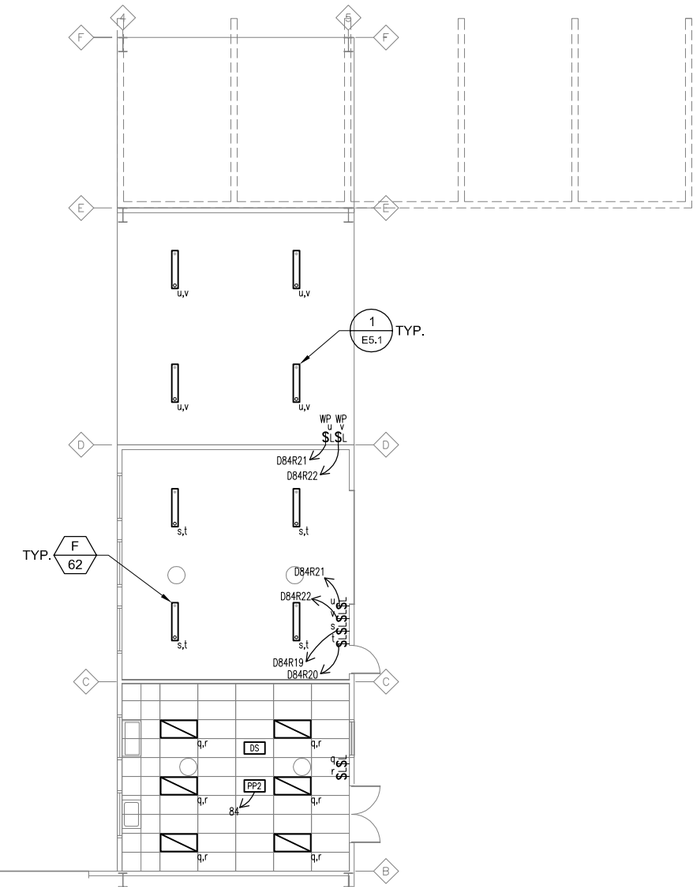

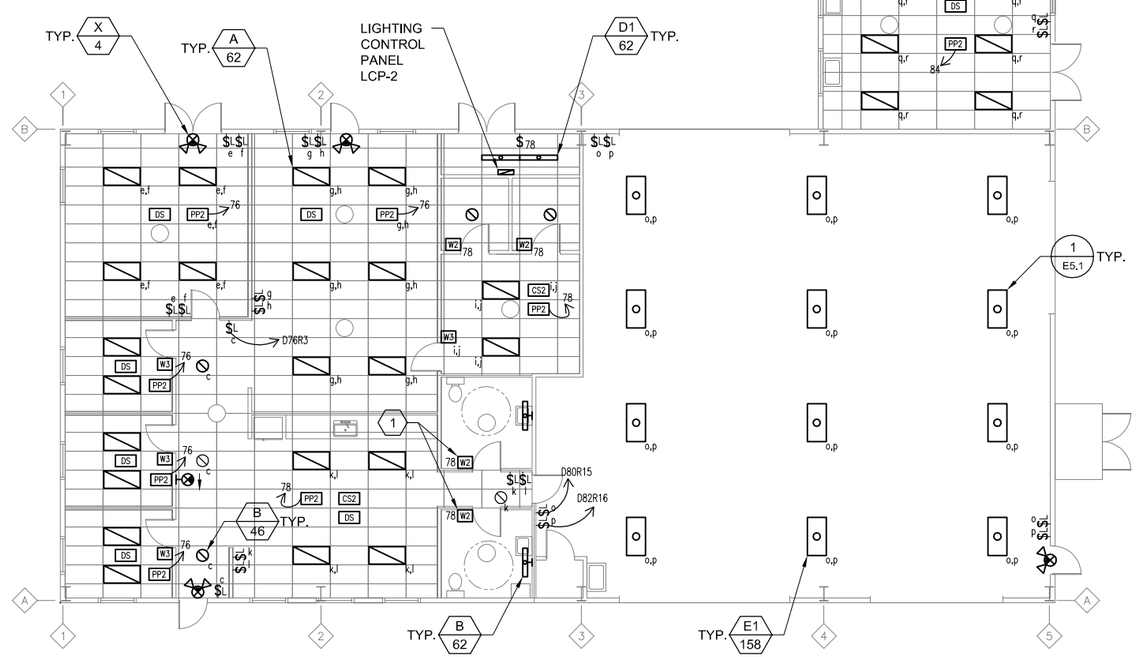

SHEET SPECIAL SYMBOLS

$L	LOW VOLTAGE DATA LINE SWITCH
W2	WALL OCCUPANCY SENSOR, LINE VOLTAGE, DUAL RELAY, DUAL TECHNOLOGY
CS2	CEILING OCCUPANCY SENSOR, LOW VOLTAGE, DUAL TECHNOLOGY, SINGLE RELAY
PP2	INTELLIGENT POWER PACK, DUAL RELAY
PC	EXTERIOR PHOTOCELL
DS	DAYLIGHT SENSOR
—L—	LOW VOLTAGE CONTROL CABLE PER MANUFACTURER'S RECOMMENDATIONS: 3 CONDUCTOR #20 AWG WEST PENN #232 OR EQUAL..

SHEET GENERAL NOTES

1. CIRCUIT NUMBERS REFER TO PANEL 'D', U.O.N.
2. SEE LIGHTING FIXTURE SCHEDULE ON SHEET E-604 FOR FIXTURE TYPE AND MOUNTING.
3. SEE SITE PLAN FOR FLEET CENTER EXTERIOR LIGHTING AND POLE-MOUNTED LIGHTING CONTROLLED BY LCP-2.
4. PROVIDE POWER CIRCUIT FROM PANEL 'D' TO EACH FIXTURE AS INDICATED BY CIRCUIT NUMBER.
5. MOUNT DAYLIGHT SENSOR ACCORDING TO MANUFACTURER'S RECOMMENDATIONS.

KEYNOTES

1. LIGHT SWITCH WIRED TO CONTROL BOTH LIGHTS AND FAN.
2. COORDINATE MOUNTING HEIGHT OF PENDANT FIXTURES TO AVOID CONFLICT. MAXIMIZE CLEARANCE ABOVE GROUND AND MAINTAIN UNIFORM MOUNTING HEIGHT WITHIN EACH ROOM OR BAY.

0 4' 8' 16'

REGISTERED PROFESSIONAL ENGINEER CHRISTOPHER A. KELLY No. E17660 Exp. 9/30/11 ELECTRICAL STATE OF CALIFORNIA

WINZLER & KELLY

NO.	DATE	REVISION	BY

SONOMA COUNTY WATER AGENCY

SCALE: 1/8"=1'-0" DATE: 5/25/2011
DRAWN: SMG
REVIEWED:

SERVICE CENTER RELOCATION (2025 AVIATION BOULEVARD)
NEW SERVICE CENTER
LIGHTING PLAN

02243-10-002

FILE NAME: 7449_E-222.dwg
CONTRACT NUMBER: 0-706-7 #01
DRAWING NUMBER: E-222
SHEET 42 OF 64

J:\02243 - SCWA\02243-10-002 SCWA Airport Service Center\CAD 02243-10-002\dwg\7449_E-222.dwg 06-06-11 01:13:45PM sgirard

REUSE OF DOCUMENTS: This document and the ideas and designs incorporated herein, as an instrument of professional service, is the property of Winzler & Kelly and shall not be reused in whole or in part for any other project without Winzler & Kelly's written authorization. © 2010 Winzler & Kelly

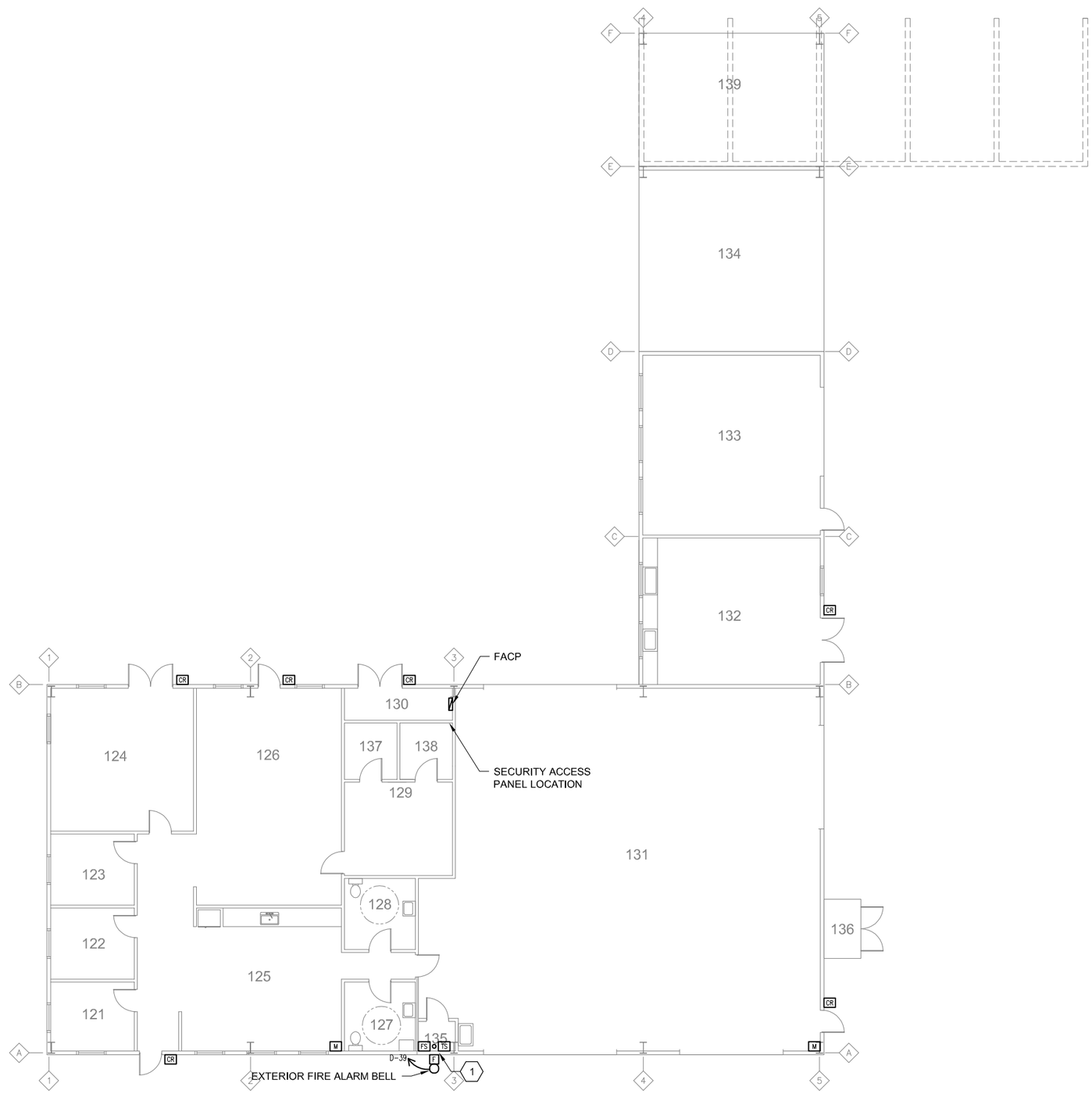

SHEET SPECIAL SYMBOLS

CR — CARD READER LOCATION. PROVIDE 2-GANG J-BOX WITH WEATHER PROOF COVER IN EXTERIOR WALL. PROVIDE ¾" CONDUIT FROM BOX TO SECURITY ACCESS EQUIPMENT LOCATION.

MS — MOTION SENSOR LOCATION. PROVIDE 2-GANG J-BOX WITH COVER AT 6" BELOW ELEVATION OF FINISHED CEILING. PROVIDE ¾" CONDUIT FROM BOX TO SECURITY ACCESS EQUIPMENT LOCATION.

SHEET GENERAL NOTES

1. PROVIDE SECURITY DEVICES AS INDICATED, SEE SPECIFICATION FOR DEVICE MODELS.
2. SEE GENERAL NOTE 7 ON E-221 FOR POWER CIRCUIT TO FIRE SMOKE DAMPERS.

KEYNOTES

1. PROVIDE (1) 3/4"C FROM FIRE SPRINKLER RISER TO FIRE ALARM CONTROL PANEL FOR FLOW SWITCH AND TAMPER SWITCH.

0 4' 8' 16'

REGISTERED PROFESSIONAL ENGINEER CHRISTOPHER A. KELLY No. E17660 Exp. 9/30/11 ELECTRICAL STATE OF CALIFORNIA

WINZLER & KELLY

NO.	DATE	REVISION	BY

SONOMA COUNTY WATER AGENCY

SCALE: 1/8"=1'-0" DATE: 5/25/2011
DRAWN: SMG
REVIEWED:

SERVICE CENTER RELOCATION (2025 AVIATION BOULEVARD)
NEW SERVICE CENTER
SIGNAL PLAN

02243-10-002
FILE NAME: 7449_E-223.dwg
CONTRACT NUMBER: 0-706-7 #01
DRAWING NUMBER: E-223
SHEET 43 OF 64

J:\02243 - SCWA\02243-10-002 SCWA Airport Service Center\CAD 02243-10-002\dwg\7449_E-223.dwg 06-06-11 01:13:47PM sgilrard

REUSE OF DOCUMENTS: This document and the ideas and designs incorporated herein, as an instrument of professional service, is the property of Winzler & Kelly and shall not be reused in whole or in part for any other project without Winzler & Kelly's written authorization. © 2010 Winzler & Kelly

SHEET GENERAL NOTES

1. SEE SINGLE LINE DIAGRAM FOR EQUIPMENT RATINGS AND ADDITIONAL INFORMATION.

DEMOLITION NOTES

1. DISCONNECT AND REMOVE (E) 15KV CABLES. CLEAN AND PREPARE (E) CONDUIT FOR REUSE.
2. DISCONNECT AND REMOVE (E) TRANSFORMER TX3 INCLUDING ASSOCIATED CONCRETE PAD, BOLLARDS, GROUNDING COMPONENTS, AND SECONDARY FEEDER. DISPOSE OF TRANSFORMER ACCORDING TO LOCAL, STATE AND FEDERAL REGULATIONS.
3. DEMOLISH (E) SWITCHBOARD LEAVING CONCRETE PAD AND FEEDER CONDUITS IN PLACE.
4. DISCONNECT AND REMOVE (E) FEEDER TO PANEL B.

KEYNOTES

1. PROVIDE 48"x72"x48" DEEP PRECAST CONCRETE PULLBOX WITH BASE, EXTENSION RING AND STEEL COVER. PROVIDE ENTIRE ASSEMBLY SUITABLE FOR H-20 LOADING. SEE DETAIL 4 ON THIS SHEET.
2. PROVIDE TRANSFORMER AS INDICATED ON THE SINGLE LINE DIAGRAM. PROVIDE CONCRETE EQUIPMENT PAD PER 1/E-502.
3. PROVIDE POWER CIRCUIT AS INDICATED IN THE CONDUIT AND CABLE SCHEDULE.
4. PROVIDE NEMA 3R SERVICE ENTRANCE SWITCHBOARD AS SHOWN ON THE SINGLE LINE DIAGRAM.
5. PROVIDE NEW 12KV FEEDER FROM (E) 12KV SWITCHGEAR TO (N) TRANSFORMER. COIL (1) FULL LOOP OF EXCESS LENGTH WIRE IN EACH PULLBOX. NO SPLICES.
6. PROVIDE MANUFACTURER'S STANDARD SPILL CONTAINMENT AT TRANSFORMER BASE.
7. INTERCEPT (E) CONDUIT FROM 12KV SWITCHGEAR.
8. PROVIDE NEW 12KV FEEDER FROM TRANSFORMER TX3A TO TRANSFORMER TX3B. COIL (1) FULL LOOP OF EXCESS LENGTH WIRE IN EACH PULLBOX. NO SPLICES.

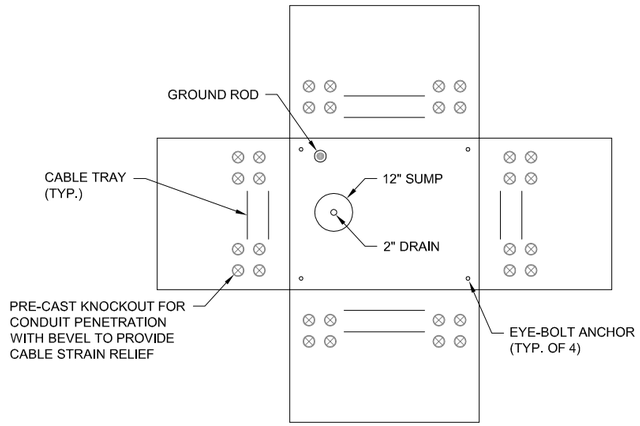

4 TYPICAL 12KV PULLBOX DETAIL
NO SCALE

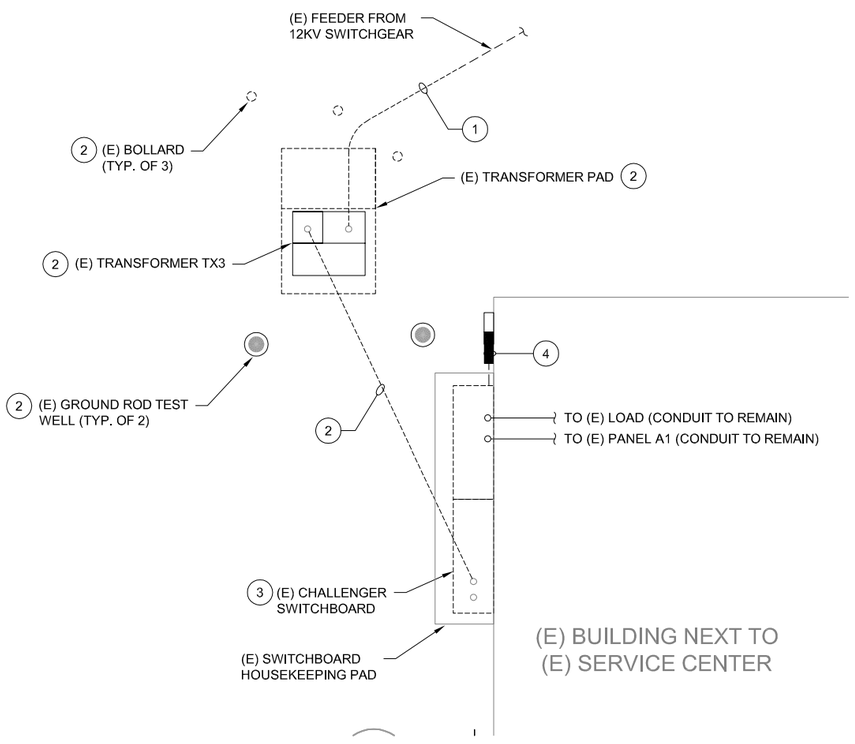

1 (E) SWITCHBOARD REMOVAL
SCALE: 1/4" = 1'-0"

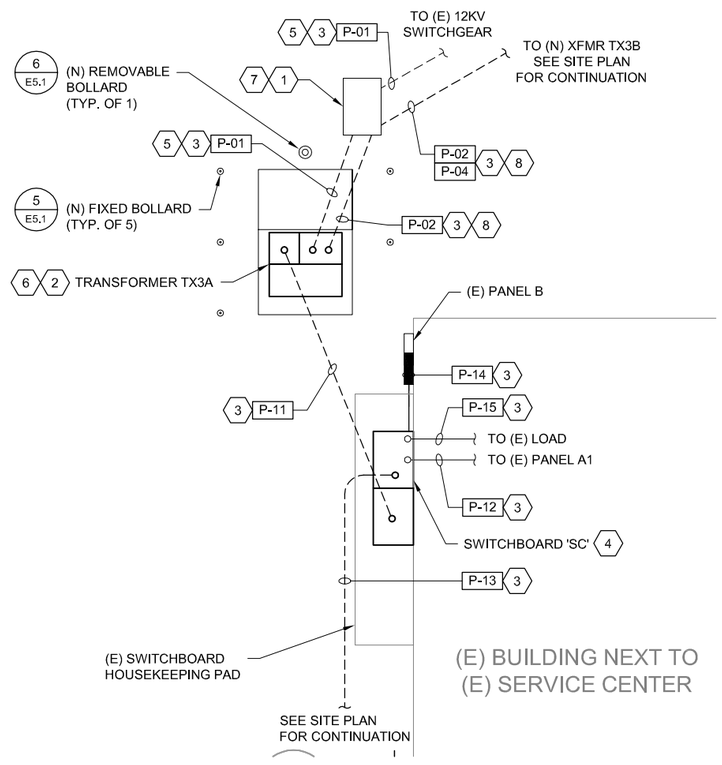

2 (N) SWITCHBOARD INSTALLATION
SCALE: 1/4" = 1'-0"

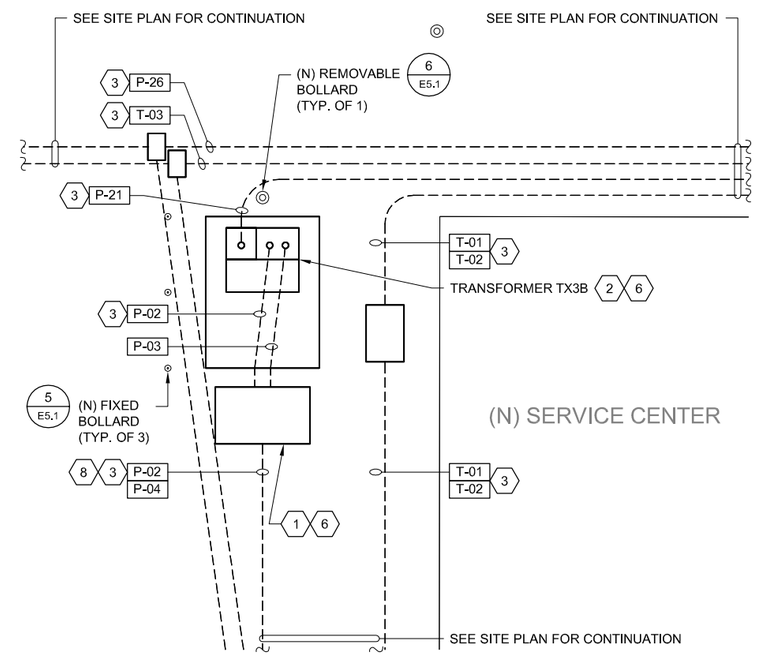

3 (N) TRANSFORMER INSTALLATION
SCALE: 1/4" = 1'-0"

REGISTERED PROFESSIONAL ENGINEER CHRISTOPHER A. KELLY No. E17660 Exp. 9/30/11 ELECTRICAL STATE OF CALIFORNIA

WINZLER & KELLY

NO.	DATE	REVISION	BY

SONOMA COUNTY WATER AGENCY

SCALE: 1/4"=1'-0" DATE: 5/25/2011
DRAWN: SMG
REVIEWED:

SERVICE CENTER RELOCATION (2025 AVIATION BOULEVARD)
(E) SWITCHBOARD REPLACEMENT

02243-10-002
FILE NAME: 7449_E-401.dwg
CONTRACT NUMBER: 0-706-7 #01
DRAWING NUMBER: E-401
SHEET 44 OF 64

J:\02243 - SCWA\02243-10-002 SCWA Airport Service Center\CAD 02243-10-002\dwg\7449_E-401.dwg 06-06-11 01:14:00PM sgirard

REUSE OF DOCUMENTS; This document and the ideas and designs incorporated herein, as an instrument of professional service, is the property of Winzler & Kelly and shall not be reused in whole or in part for any other project without Winzler & Kelly's written authorization. © 2010 Winzler & Kelly

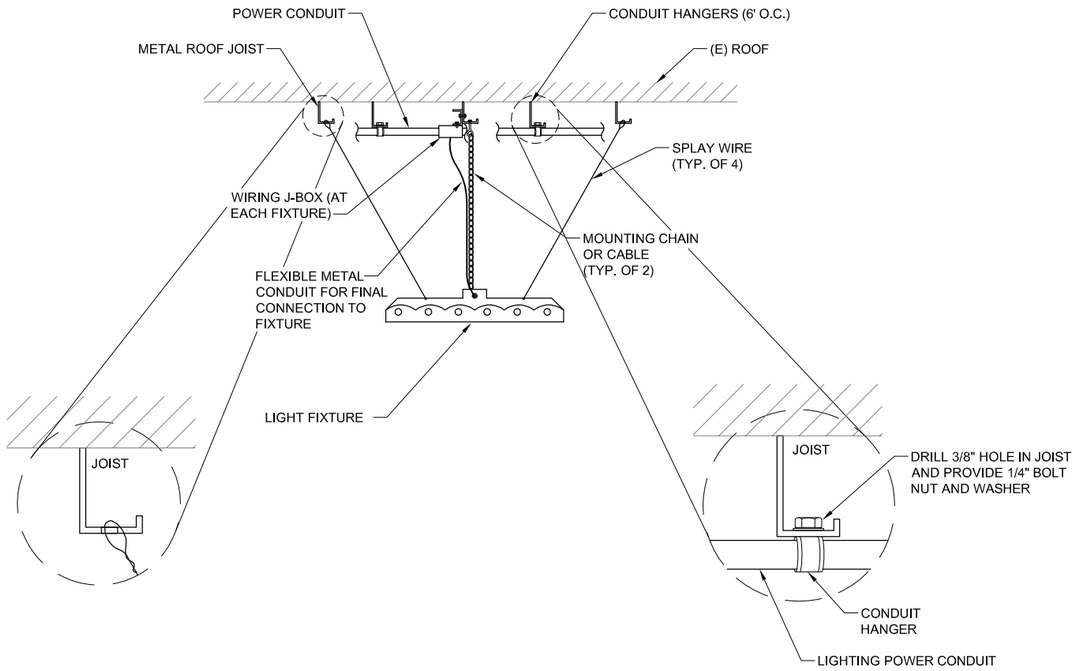

1 PENDANT LIGHT FIXTURE

NOT TO SCALE

POLE HEIGHT	POLE BASE DEPTH (MIN)
25 FT - 35 FT	60-INCH

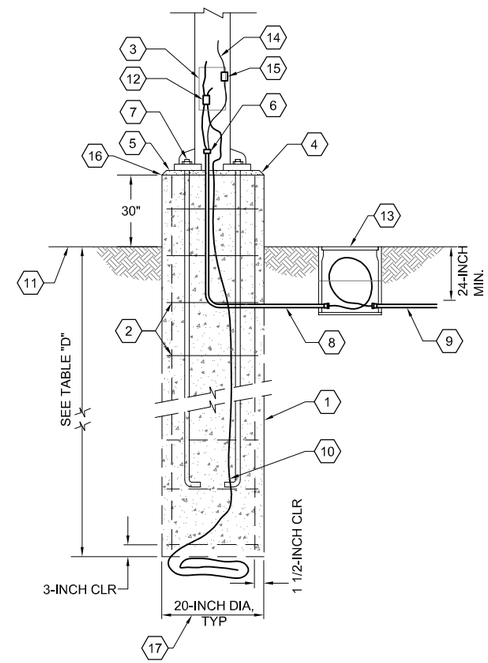

DETAIL NOTES:

1. POURED IN PLACE ROUND CONCRETE SUPPORT BASE.
2. 4- NO. 6 VERTICAL BARS WITH NO. 3 TIES @ 8-INCH O.C.
3. ACCESS HAND-HOLE.
4. 3/4-INCH - 45°CHAMFER ALL AROUND.
5. GROUT IN ALL AROUND BETWEEN BOTTOM OF POLE BASE FOLLOWING POLE ERECTION AND FINAL LEVELING.
6. STUB CONDUIT UP INTO POLE BASE WIRING CAVITY. (IF RGS TERMINATE WITH GROUNDING BUSHING.)
7. PROVIDE SUPPORT AND LEVELING NUTS ON TOP AND BOTTOM OF POLE BASE MOUNTING PLATE. MOUNTING PLATE AND MOUNTING BOLTS SHALL BE PER MANUFACTURERS BOLT PATTERN, LENGTH SHALL BE PER MANUFACTURERS SPECIFICATIONS.
8. TYPICAL PVC CONDUIT, 3/4-INCH MIN, WITH CONDUCTORS AS INDICATED ON DRAWINGS.
9. TYPICAL INCOMING EXTERIOR BRANCH CIRCUIT CONDUIT AND WIRING FROM U.G. CONDUITS.
10. (1) #4 AWG BARE COPPER GROUND. COIL 30-INCH AT BOTTOM OF FOUNDATION.
11. TOP OF SODDED GRADE, SIDEWALK OR ASHPALT PAVING AS INDICATED ON THE RESPECTIVE AREA SITE PLAN.
12. BOLTED TYPE WIRE GROUND CONNECTOR.
13. REINFORCED, PRECAST GRADE MOUNTED ELECTRICAL BOX, CHRISTY B1017 OR EQUAL. PROVIDE WITH OPEN BOTTOM. ALL SPLICES SHALL BE MADE IN THE PULL BOX AND SHALL BE WATERPROOF, CAST TYPE.
14. WIRING TO LIGHT FIXTURE. CONNECT COMPLETE.
15. WATERPROOF IN-LINE FUSES.
16. TOP OF POLE BASE SHOWN AT 30-INCHES. ADJUST HEIGHT OF CONCRETE BASE TO MATCH EXISTING. MAINTAIN MINIMUM EMBEDMENT DEPTH.
17. WHERE THERE ARE EXISTING POLE MOUNTED FIXTURES ON THE JOB SITE, MODIFY DIAMETER OF POLE BASE TO MATCH EXISTING. MINIMUM DIAMETER SHALL BE 18-INCH.

2 TYPICAL LIGHT POLE FOUNDATION

NOT TO SCALE

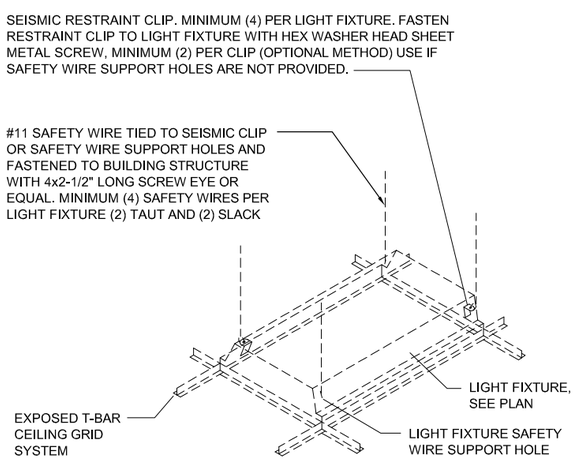

3 RECESSED LIGHT FIXTURE

NOT TO SCALE

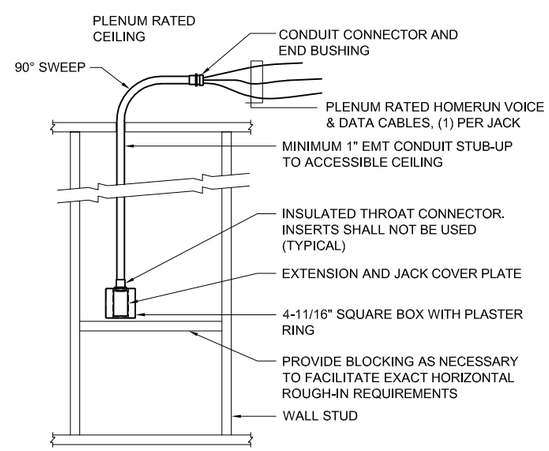

4 TYPICAL VOICE-DATA STUB-UP

NOT TO SCALE

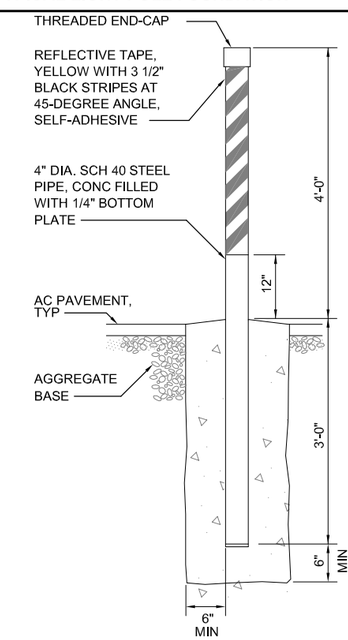

NOTES:
1. HOT DIP GALVANIZE ALL STEEL AFTER FABRICATION.

5 TYPICAL NON REMOVABLE BOLLARD

NOT TO SCALE

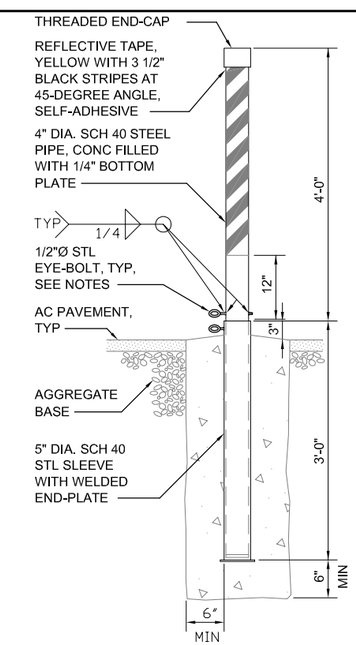

NOTES:
1. DRILL 5/8" DIA. HOLE THROUGH 4" DIA. PIPE AND INSERT EYE-BOLT. WELD EYE-BOLT IN PLACE ON BOTH SIDES OF PIPE.
2. CUT SECOND EYE-BOLT AND WELD EYE TO 5" DIA. SLEEVE.
3. EYE-BOLTS SHALL BE NO MORE THAN 1/2" APART TO PERMIT PAD LOCKING.
4. HOT DIP GALVANIZE ALL STEEL AFTER FABRICATION.

6 TYPICAL REMOVABLE BOLLARD

NOT TO SCALE

REGISTERED PROFESSIONAL ENGINEER CHRISTOPHER A. BAILEY No. E17660 Exp. 9/30/11 ELECTRICAL STATE OF CALIFORNIA

WINZLER & KELLY

NO.	DATE	REVISION	BY

SONOMA COUNTY WATER AGENCY

SCALE: AS NOTED
DATE: 5/25/2011
DRAWN: BAT
REVIEWED:

SERVICE CENTER RELOCATION (2025 AVIATION BOULEVARD)

ELECTRICAL DETAILS-1

02243-10-002

FILE NAME: 7449_E-501.dwg
CONTRACT NUMBER: 0-706-7 #01

DRAWING NUMBER: E-501

SHEET 45 OF 64

J:\02243 - SCWA\02243-10-002 SCWA Airport Service Center\CAD 02243-10-002\dwg\7449_E-501.dwg 06-06-11 01:14:03PM sgilrand

REUSE OF DOCUMENTS: This document and the ideas and designs incorporated herein, as an instrument of professional service, is the property of Winzler & Kelly and shall not be reused in whole or in part for any other project without Winzler & Kelly's written authorization. © 2010 Winzler & Kelly

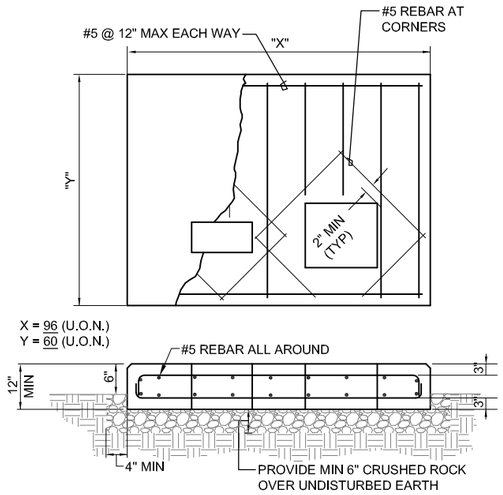

PROVIDE GROUNDING RING PER DETAIL 2, THIS SHEET.

ADJUST CONCRETE PAD SIZE TO MATCH EQUIPMENT PROVIDED.

NOTE:
PRECAST TRANSFORMER PADS MEETING REQUIREMENTS OF UTILITY (FOR UTILITY TRANSFORMERS) OR TRANSFORMER MANUFACTURER (FOR CUSTOMER OWNED TRANSFORMERS) MAY BE USED IN LIEU OF CAST IN PLACE PADS.

1 TRANSFORMER PAD ON GRADE

NOT TO SCALE

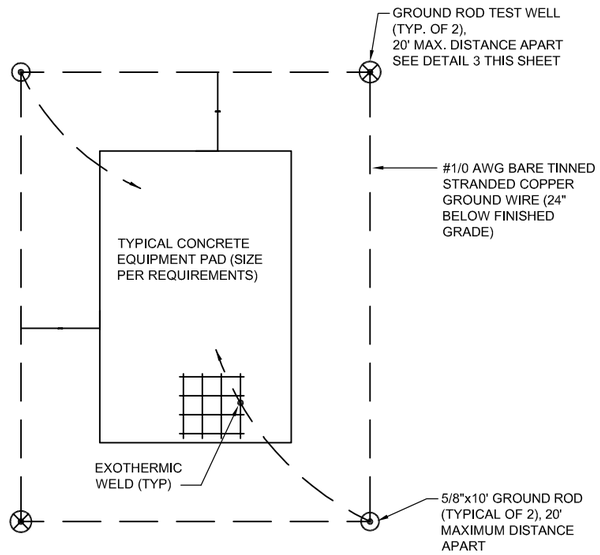

2 GROUNDING RING

1" = 1'-0"

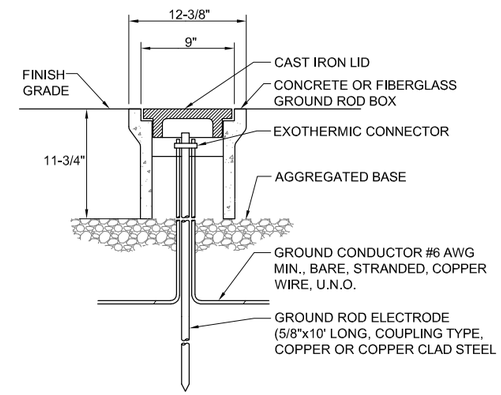

3 GROUND ROD TEST WELL

NOT TO SCALE

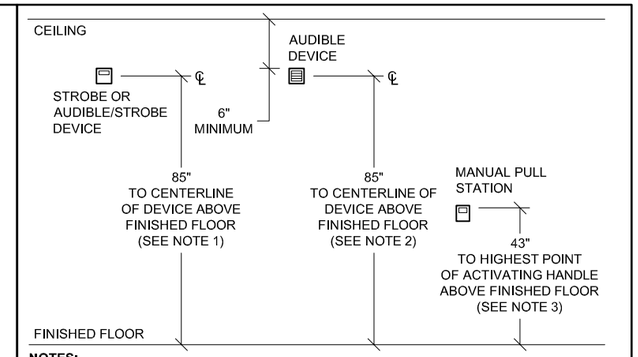

NOTES:

1. THE ACTUAL REQUIREMENT PER NFPA 72 7.5.4.1 READS, "WALL-MOUNTED APPLIANCES SHALL BE MOUNTED SUCH THAT THE ENTIRE LENS IS NOT LESS THAN 2030 MM (80 IN.) AND NOT GREATER THAN 2440 MM (96 IN.) ABOVE THE FINISHED FLOOR OR AT THE MOUNTING HEIGHT SPECIFIED USING THE PERFORMANCE-BASED ALTERNATIVE OF 7.5.4.5." FOR THIS PROJECT MOUNT THE DEVICES AS SHOWN.
2. THE ACTUAL REQUIREMENT PER NFPA 72 7.4.7.1 READS, "IF CEILING HEIGHTS ALLOW, AND UNLESS OTHERWISE PERMITTED BY 7.4.7.2 THROUGH 7.4.7.5, WALL-MOUNTED APPLIANCES SHALL HAVE THEIR TOPS ABOVE THE FINISHED FLOORS AT HEIGHTS OF NOT LESS THAN 2290 MM (90 IN.) AND BELOW THE FINISHED CEILINGS AT DISTANCES OF NOT LESS THAN 150 MM (6 IN.)." FOR THIS PROJECT MOUNT THE DEVICES AS SHOWN.
3. THE ACTUAL REQUIREMENTS PER CBC 907.3.2 READS "THE HEIGHT OF THE MANUAL FIRE ALARM BOXES SHALL BE A MINIMUM OF 42 INCHES (1067 MM) AND A MAXIMUM OF 48 INCHES (1219 MM), MEASURED VERTICALLY, FROM THE FLOOR LEVEL TO THE HIGHEST POINT OF THE ACTIVATING HANDLE OR LEVER OF THE BOX. MANUAL FIRE ALARM BOXES SHALL ALSO COMPLY WITH SECTION 1117B.6 ITEM 4."

4 FIRE ALARM DEVICE MOUNTING HEIGHTS

NOT TO SCALE

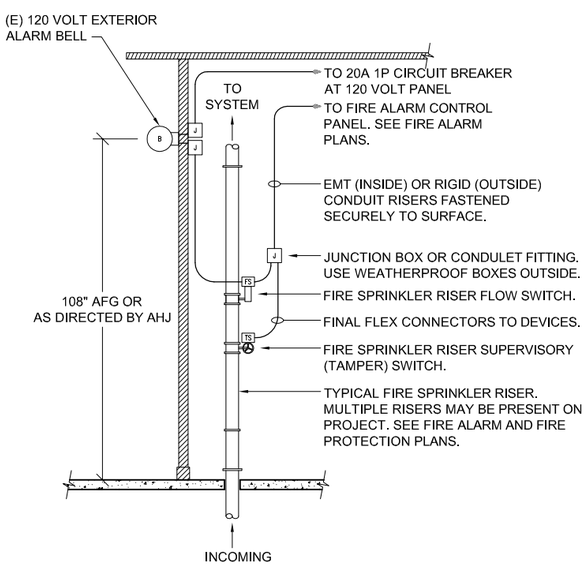

5 FIRE RISER - FLOW AND TAMPER SWITCHES

NOT TO SCALE

SYSTEM NO. W-L-1001

F RATING--1, 2, 3, AND 4 HR (SEE ITEMS 2 AND 3)
T RATINGS--0, 1, 2, 3, AND 4 HR (SEE ITEM 3)
L RATING AT AMBIENT--LESS THAN 1 CFM/sq ft
L RATING AT 400° F--LESS THAN 1 CFM/sq ft

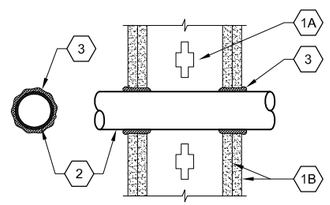

MAX PIPE OR CONDUIT DIA IN.	ANNULAR SPACE IN.	F RATING HR	T RATING HR
1	0 to 3/16	1 or 2	0, 1 or 2
1	1/4 to 1/2	3 or 4	3 or 4
4	0 to 1-1/2	1 or 2	0

*CAULK FILL MATERIAL SHALL BEAR THE UL CLASSIFICATION MARKING AND SHALL BE MINNESOTA MINING & MFG CO - CP 25WB+ OR APPROVED EQUAL.

1. WALL ASSEMBLY - THE 1, 2, 3 OR 4 HR FIRE-RATED GYPSUM WALLBOARD/STUD WALL ASSEMBLY SHALL BE CONSTRUCTED OF THE MATERIALS AND IN THE MANNER DESCRIBED IN THE INDIVIDUAL U300 OR U400 SERIES WALL OR PARTITION DESIGNS IN THE UL FIRE RESISTANCE DIRECTORY AND SHALL INCLUDE THE FOLLOWING CONSTRUCTION FEATURES:
   A. STUDS - WALL FRAMING MAY CONSIST OF EITHER WOOD STUDS (MAX 2 H FIRE RATED ASSEMBLIES) OR STEEL CHANNEL STUDS. WOOD STUDS TO CONSIST OF NOM 2 BY 4 IN. LUMBER SPACED 16 IN. OC WITH NOM 2 BY 4 IN. LUMBER END PLATES AND CROSS BRACES. STEEL STUDS TO BE MIN 3-5/8 IN. WIDE BY 1-3/8 IN. DEEP CHANNELS SPACED MAX 24 IN. OC.
   B. GYPSUM BOARD* - NOM 1/2 OR 5/8 IN. THICK, 4 FT. WIDE WITH SQUARE OR TAPERED EDGES. THE GYPSUM WALLBOARD TYPE, THICKNESS, NUMBER OF LAYERS, FASTENER TYPE AND SHEET ORIENTATION SHALL BE AS SPECIFIED IN THE INDIVIDUAL U300 OR U400 SERIES DESIGN IN THE UL FIRE RESISTANCE DIRECTORY. MAX DIAM OF OPENING IS 13-1/2 IN.
2. PIPE OR CONDUIT - NOM 12 IN. DIAM (OR SMALLER) SCHEDULE 10 (OR HEAVIER) STEEL PIPE, NOM 12 IN. DIAM (OR SMALLER) SERVICE WEIGHT (OR HEAVIER) CAST IRON SOIL PIPE, NOM 12 IN. DIAM (OR SMALLER) CLASS 50 (OR HEAVIER) DUCTILE IRON PRESSURE PIPE, NOM 6 IN. DIAM (OR SMALLER) STEEL CONDUIT, NOM 4 IN. DIAM (OR SMALLER) STEEL ELECTRICAL METALLIC TUBING, NOM 6 IN. DIAM (OR SMALLER) TYPE L OR (OR HEAVIER) COPPER TUBING OR NOM 1 IN. DIAM (OR SMALLER) FLEXIBLE STEEL CONDUIT. WHEN COPPER PIPE IS USED, MAX F RATING OF FIRESTOP SYSTEM (ITEM 3) IS 2 H. STEEL PIPES OR CONDUITS LARGER THAN NOM 4 IN. DIAM MAY ONLY BE USED IN WALLS CONSTRUCTED USING STEEL CHANNEL STUDS. A MAX OF ONE PIPE OR CONDUIT IS PERMITTED IN THE FIRESTOP SYSTEM. PIPE OR CONDUIT TO BE INSTALLED NEAR CENTER OF STUD CAVITY WIDTH AND TO BE RIGIDLY SUPPORTED ON BOTH SIDES OF WALL ASSEMBLY.
3. FILL,VOID OR CAVITY MATERIAL* - CAULK - CAULK FILL MATERIAL INSTALLED TO COMPLETELY FILL ANNULAR SPACE BETWEEN PIPE OR CONDUIT AND GYPSUM WALLBOARD AND WITH A MIN 1/4 IN. DIAM BEAD OF CAULK APPLIED TO PERIMETER OF PIPE OR CONDUIT AT ITS EGRESS FROM THE WALL. CAULK INSTALLED SYMMETRICALLY ON BOTH SIDES OF WALL ASSEMBLY. THE HOURLY F RATING OF THE FIRESTOP SYSTEM IS DEPENDENT UPON THE HOURLY FIRE RATING OF THE WALL ASSEMBLY IN WHICH IT IS INSTALLED, AS SHOWN IN THE FOLLOWING TABLE. THE HOURLY T RATING OF THE FIRESTOP SYSTEM IS DEPENDENT UPON THE TYPE OR SIZE OF THE PIPE OR CONDUIT AND THE HOURLY FIRE RATING OF THE WALL ASSEMBLY IN WHICH IT IS INSTALLED, AS TABULATED:

6 FIRE RATED WALL PENETRATION

NOT TO SCALE

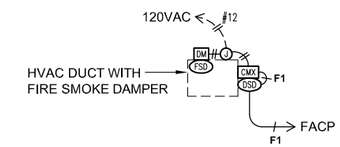

USING DUCT SMOKE DETECTOR

NOTES FOR HVAC UNIT SMOKE DETECTOR INSTALLATION:

1. AT EACH LOCATION DENOTED BY (FSD) PROVIDE AN ADDRESSABLE SMOKE OR DUCT SMOKE DETECTOR, ADDRESSABLE CONTROL MODULE, 120VAC POWER CIRCUIT AND CONNECTION TO DAMPER MOTOR AS DEPICTED IN THIS DIAGRAM.

SYMBOLS LEGEND:

- (FSD) FIRE SMOKE DAMPER (SEE FIRE ALARM AND MECHANICAL PLANS)
- (CMX) CONTROL MODULE (ADDRESSABLE)
- (DSD) DUCT SMOKE DETECTOR (ADDRESSABLE) (SEE FIRE ALARM AND MECHANICAL PLANS)
- (DM) DAMPER MOTOR
- (SD) SMOKE DETECTOR

8 DUCT SMOKE DETECTOR AND FSD CONNECTIONS

NOT TO SCALE

REGISTERED PROFESSIONAL ENGINEER CHRISTOPHER A. KELLY No. E17660 Exp. 9/30/11 ELECTRICAL STATE OF CALIFORNIA

WINZLER & KELLY

NO.	DATE	REVISION	BY

SONOMA COUNTY WATER AGENCY

SCALE: AS NOTED
DATE: 5/25/2011
DRAWN: BAT
REVIEWED:

SERVICE CENTER RELOCATION (2025 AVIATION BOULEVARD)

ELECTRICAL DETAILS-2

02243-10-002

FILE NAME: 7449_E-502.dwg
CONTRACT NUMBER: 0-706-7 #01

DRAWING NUMBER: E-502

SHEET 46 OF 64

J:\02243 - SCWA\02243-10-002 SCWA Airport Service Center\CAD 02243-10-002\dwg\7449_E-502.dwg 06-06-11 01:14:07PM sgifrard

REUSE OF DOCUMENTS: This document and the ideas and designs incorporated herein, as an instrument of professional service, is the property of Winzler & Kelly and shall not be reused in whole or in part for any other project without Winzler & Kelly's written authorization. © 2010 Winzler & Kelly

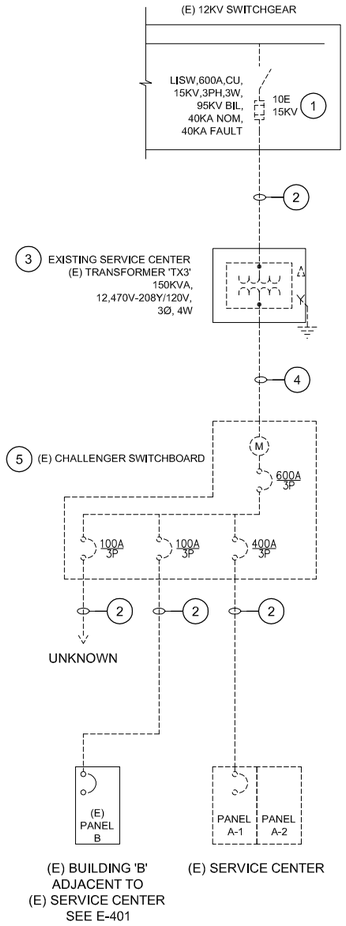

1 (E) SINGLE LINE

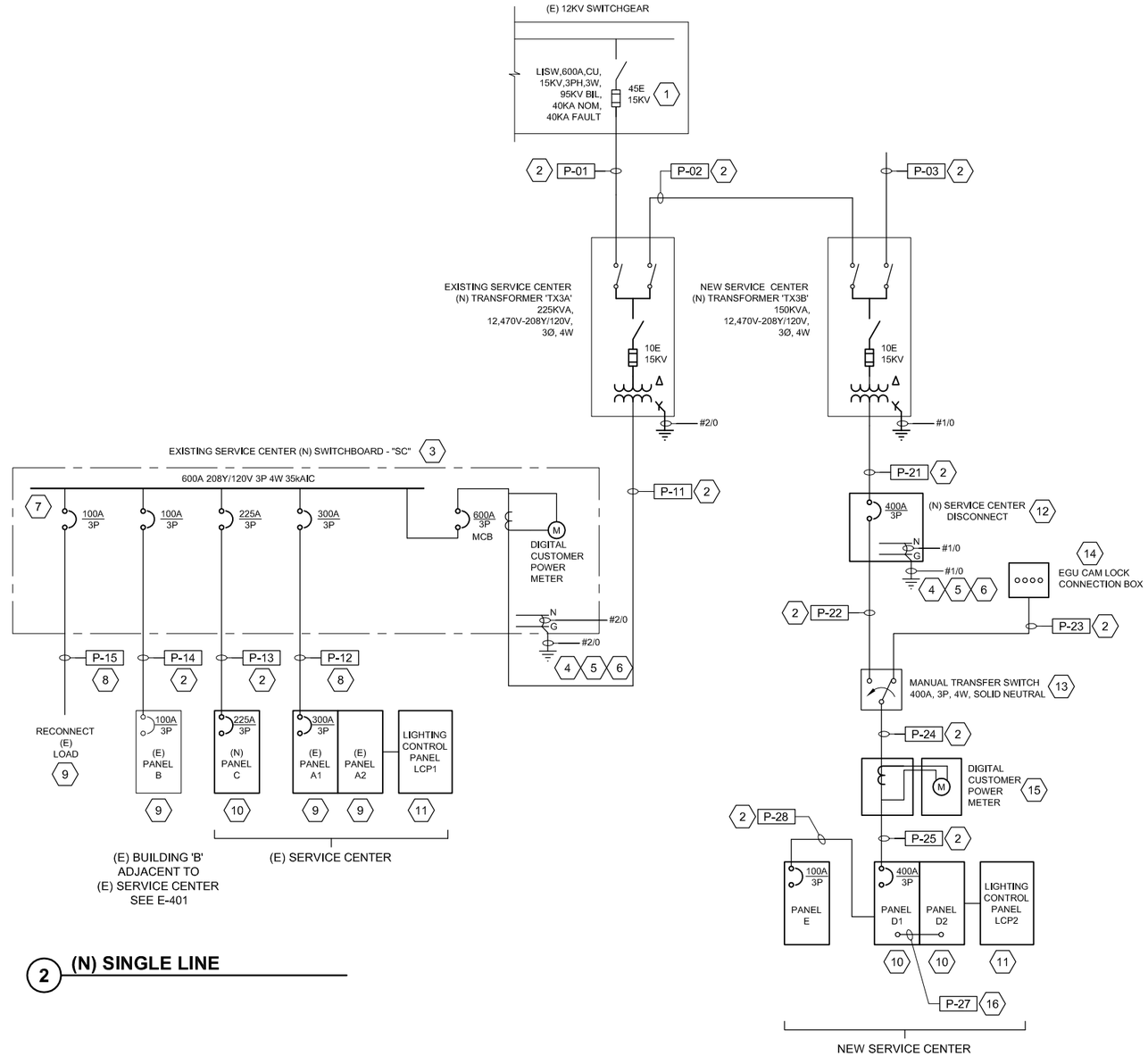

2 (N) SINGLE LINE

SHEET GENERAL NOTES

1. SEE SITE PLAN & BUILDING PLANS FOR LOCATIONS OF ELECTRICAL EQUIPMENT.
2. DIGITAL METER SHALL BE SQUARE D ION 7500 OR EQUAL WITH MATCHING CURRENT TRANSFORMERS.
3. SEE SHEETS E-602 THRU E-605 FOR SCHEDULES.

KEYNOTES

1. PROVIDE 15KV FUSE AS INDICATED.
2. PROVIDE POWER CIRCUIT AS INDICATED IN THE CONDUIT AND CABLE SCHEDULE.
3. PROVIDE NEMA 3R 600A SERVICE ENTRANCE SWITCHBOARD, SQUARE D SPEED-D OR EQUAL. PROVIDE CUSTOMER METERING, BUSSING, AND CIRCUIT BREAKERS AS INDICATED. MOUNT SWITCHBOARD ON (E) CONCRETE PAD AND ALIGN OVER (E) FEEDER CONDUITS TO THE EXTENT POSSIBLE.
4. PROVIDE AN UNSPLICED GROUNDING ELECTRODE CONDUCTOR TO THE GROUNDING ELECTRODE SYSTEM. THE GROUNDING ELECTRODE SYSTEM FOR THIS PROJECT SHALL CONSIST OF THE BUILDING METAL STRUCTURE, ALL AVAILABLE METAL UNDERGROUND WATER PIPING, AND GROUND RODS (MADE ELECTRODES) IF REQUIRED. BOND THE ELECTRODES TOGETHER IN ACCORDANCE WITH NEC 250-50.
5. PROVIDE A BONDING JUMPER TO THE BUILDING INTERIOR METAL WATER PIPING, EXPOSED INTERIOR STRUCTURAL STEEL, INTERIOR METAL GAS PIPING, AND OTHER INTERIOR METAL PIPING IN ACCORDANCE WITH NEC 250-104. ESTABLISH THE CONNECTIONS AT ACCESSIBLE LOCATIONS AND PROVIDE BONDING JUMPERS ACROSS REMOVABLE OR ELECTRICALLY NON-CONTINUOUS JOINTS.
6. PROVIDE PHYSICAL PROTECTION FOR GROUNDING ELECTRODE AND BONDING CONDUCTORS IN ACCORDANCE WITH NEC 250-64. GROUNDING CONDUCTORS INSTALLED IN EQUIPMENT ENCLOSURES OR IN ELECTRICAL/TELECOM ROOMS MAY BE RUN LOOSE AS PERMITTED BY NEC 250-64(b); GROUNDING CONDUCTORS IN ALL OTHER LOCATIONS SHALL BE IN CONDUIT INSTALLED IN ACCORDANCE WITH NEC 250-64(e).
7. PROVIDE BUSSING AND MOUNTING HARDWARE FOR AN ADDITIONAL (2) 200 AMP FRAME, AND (2) 100 AMP FRAME CIRCUIT BREAKERS.
8. PROVIDE CONDUIT TO INTERCEPT (E) CONDUIT. PROVIDE CABLE IN (N) AND (E) CONDUIT AS SHOWN ON THE CONDUIT AND CABLE SCHEDULE.
9. RECONNECT (E) PANEL TO (N) FEEDER.
10. PROVIDE (N) SURFACE MOUNT PANELBOARD COMPLETE WITH CIRCUIT BREAKERS AND ACCESSORIES AS SHOWN IN THE PANEL SCHEDULES.
11. PROVIDE LIGHTING CONTROL PANEL, WATTSTOPPER LIGHTING INTEGRATOR OR EQUAL WITH TIMECLOCK, ROOFTOP PHOTOCELL, GROUP SWITCHING CARD, AND RELAYS AS INDICATED.
12. PROVIDE ENCLOSED CIRCUIT BREAKER LABELED AS SUITABLE FOR USE AS SERVICE EQUIPMENT. PROVIDE GROUNDABLE NEUTRAL ASSEMBLY AND SERVICE GROUND KIT. PROVIDE SYSTEM BOND AND GROUNDING AS SHOWN. MINIMUM AIC RATING OF 25,000A.
13. PROVIDE WALL MOUNT NEMA 3R 400A, TRANSFER SWITCH. SEE SITE PLAN FOR MOUNTING LOCATION.
14. PROVIDE WALL MOUNT NEMA 3R CAM LOCK CONNECTION BOX FOR PORTABLE EGU CONNECTION, SQUARE D SPQCL204RS OR EQUAL.
15. PROVIDE CT CABINET AND DIGITAL CUSTOMER METER IN ELECTRICAL ROOM.
16. PROVIDE SUBFEED LUGS IN PANELS D1 AND D2. PROVIDE CABLE CONNECTION BETWEEN PANELS AS SHOWN.

DEMOLITION NOTES

1. DISCONNECT AND REMOVE (E) FUSES. CLEAN AND INSPECT FUSEHOLDERS AND SWITCH MECHANISM FOR DAMAGE AND WEAR.
2. REMOVE (E) CABLES, CLEAN AND PREPARE (E) CONDUIT FOR REUSE.
3. DISCONNECT AND REMOVE (E) TRANSFORMER AND ASSOCIATED CONCRETE PAD AND GROUDING COMPONENTS.
4. DISCONNECT AND REMOVE (E) UNDERGROUND FEEDER AND CONDUIT.
5. DEMOLISH (E) SWITCHBOARD, LEAVING PAD AND OUTGOING CONDUITS IN PLACE.

REGISTERED PROFESSIONAL ENGINEER CHRISTOPHER A. KELLY No. E17660 Exp. 9/30/11 ELECTRICAL STATE OF CALIFORNIA

WINZLER & KELLY

NO.	DATE	REVISION	BY

SONOMA COUNTY WATER AGENCY

SCALE: NONE
DATE: 5/25/2011
DRAWN: SMG
REVIEWED:

SERVICE CENTER RELOCATION (2025 AVIATION BOULEVARD)

ELECTRICAL SINGLE LINE DIAGRAM

02243-10-002

FILE NAME: 7449_E-601.dwg
CONTRACT NUMBER: 0-706-7 #01

DRAWING NUMBER: E-601

SHEET 47 OF 64

J:\02243 - SCWA\02243-10-002 SCWA Airport Service Center\CAD 02243-10-002\dwg\7449_E-601.dwg 06-06-11 01:14:12PM sgirard

REUSE OF DOCUMENTS: This document and the ideas and designs incorporated herein, as an instrument of professional service, is the property of Winzler & Kelly and shall not be reused in whole or in part for any other project without Winzler & Kelly's written authorization. © 2010 Winzler & Kelly

PANEL SCHEDULE

PANEL NAME: **(E) A1** VOLTAGE: 208 NEMA RATING: NOTES:
MAINS RATING: 300A PHASE: 3 AIC RATING: MOUNTING: SURFACE
BUS RATING: 300A WIRE: 4 LOCATION: ROOM 104

CKT NO.	USE	DESCRIPTION	BKR SIZE	BKR OPTS	BKR KVA	PHASE	BKR KVA	BKR OPTS	BKR SIZE	DESCRIPTION	USE	CKT NO.
1	*L*	**LIGHTING 101A**	**20/1**		**0.58**	A			*50/2*	*WELDER*	*O*	2
3	*L*	**LIGHTING 101B,C,D,E**	**20/1**		**0.58**	B					*O*	4
5	*L*	**LIGHTING 101B,C,D,E**	**20/1**		**1.40**	C			*20/1*	*EQUIPT. STORAGE OUTLETS*	*R*	6
7	*L*	**LIGHTING 107,108,109**	**20/1**		**0.67**	A			*20/1*	*EQUIPT. STORAGE OUTLETS*	*R*	8
9	*L*	**EXTERIOR WALL PACKS**	**20/1**		**0.35**	B			*20/1*	*EQUIPT. STORAGE OUTLETS*	*R*	10
11	*L*	**RESTROOMS, STORAGE & MEZZ.**	**20/1**		**0.52**	C			*20/1*	*OUTDOOR OUTLETS*	*R*	12
13	*P*	**LCP-1 CONTROL POWER**	**20/1**		**0.12**	A			*20/1*	*LUBE BAY OUTLETS*	*R*	14
15	-	**SPARE**	**20/1**			B			*20/1*	*LUBE BAY OUTLETS*	*R*	16
17	*M*	*DOOR MOTORS (101)*	*30/3*			C			*20/1*	*LUBE BAY OUTLETS*	*R*	18
19	*M*					A			*20/1*	*SHOP OUTLETS*	*R*	20
21	*M*					B			*20/1*	*SHOP OUTLETS*	*R*	22
23	*M*	*DOOR MOTORS (102-103-104)*	*30/3*			C			*20/1*	*SHOP OUTLETS*	*R*	24
25	*M*					A			*20/1*	*PARTS & STORAGE OUTLETS*	*R*	26
27	*M*					B			*20/1*	*OUTLETS (106-107-108-109)*	*R*	28
29	-	*SPARE*	*30/3*			C			*20/1*	*OUTLETS (108-109)*	*R*	30
31	-					A			*20/1*	*OUTLETS (108-109)*	*R*	32
33	-					B			*20/1*	*REFRIGERATOR*	*M*	34
35	-					C			*20/1*	*MICROWAVE*	*O*	36
37	-	**SPARE**	**40/3**			A		LO	*20/1*	*CRANE (101)*	*M*	38
39	-					B			*20/1*	*RADIO*	*O*	40
41	-	**SPARE**	**20/1**			C			*20/1*	*TELEPHONE BOARD*	*O*	42

LOADS
PHASE A: 1.4 (KVA)
PHASE B: 0.9 (KVA)
PHASE C: 1.9 (KVA)
TOTAL: 4.2 (CONNECTED KVA)
11.7 (CONNECTED AMPS)

USE LEGEND	LOAD TYPE
H	HVAC
L	LIGHTING
M	MOTOR
O	OTHER
R	RECEPTACLE
P	PANEL

BREAKER OPTIONS
GFCI - GROUND FAULT CIRCUIT INTERRUPTER
LO - LOCK-ON DEVICE
PA - PADLOCK ATTACHMENT
ST - SHUNT TRIP

(E) LOADS INDICATED BY ITALICS
(N) LOADS BOLD

PANEL SCHEDULE

PANEL NAME: **(E) A2** VOLTAGE: 208 NEMA RATING: NOTES:
MAINS RATING: 300A PHASE: 3 AIC RATING: MOUNTING: SURFACE
BUS RATING: 300A WIRE: 4 LOCATION: ROOM 104

CKT NO.	USE	DESCRIPTION	BKR SIZE	BKR OPTS	BKR KVA	PHASE	BKR KVA	BKR OPTS	BKR SIZE	DESCRIPTION	USE	CKT NO.
43	*H*	*FAN COIL UNIT*	*70/3*			A			*20/3*	*SUMP PUMP*	*M*	44
45	*H*					B					*M*	46
47	*H*					C					*M*	48
49	*M*	*COMPRESSOR*	*70/3*			A			*30/2*	*WATER HEATER*	*O*	50
51	*M*					B					*O*	52
53	*M*					C			*20/1*	*ATTIC LIGHTS IN BATHROOM*	*L*	54
55	*O*	*FUEL TANK*	*20/1*			A			*50/2*	*WELDER OUTLET*	*O*	56
57	*H*	*LUBE BAY EXHAUST FANS*	*90/2*			B					*O*	58
59	*H*					C			*20/1*	*CRANES (102-103)*	*M*	60
61			*20/1*			A			*20/1*			62
63			*20/1*			B			*20/1*			64
65			*20/1*			C			*20/1*			66
67			*20/1*			A			*20/1*			68
69			*20/1*			B			*20/1*			70
71			*20/1*			C			*20/1*			72
73			*20/1*			A			*20/1*			74
75	*M*	*EXHAUST FAN EF-1*	*20/1*			B			*20/1*			76
77	*M*	*EXHAUST FAN EF-2*	*20/1*			C			*20/1*			78
79	*M*	*EXHAUST FAN EF-3*	*20/1*			A			*20/1*			80
81	**R**	**DED RECEPT**	**20/1**			B			**30/2**	**ICE MAKER**		82
83	**R**	**BATH RECEPT**	**20/1**			C			**-**			84

LOADS
PHASE A: (KVA)
PHASE B: (KVA)
PHASE C: (KVA)
TOTAL: (CONNECTED KVA)
(CONNECTED AMPS)

USE LEGEND	LOAD TYPE
H	HVAC
L	LIGHTING
M	MOTOR
O	OTHER
R	RECEPTACLE
P	PANEL

BREAKER OPTIONS
GFCI - GROUND FAULT CIRCUIT INTERRUPTER
LO - LOCK-ON DEVICE
PA - PADLOCK ATTACHMENT
ST - SHUNT TRIP

(E) LOADS INDICATED BY ITALICS
(N) LOADS BOLD

PANEL SCHEDULE

PANEL NAME: **(E) PANEL B** VOLTAGE: 208 NEMA RATING: NOTES: ON (E) BLDG NEXT TO (E) SERVICE CENTER
MAINS RATING: 100A PHASE: 3 AIC RATING: MOUNTING: SURFACE
BUS RATING: 125A WIRE: 4 LOCATION: EXTERIOR WALL NEXT TO SWITCHBOARD

CKT NO.	USE	DESCRIPTION	BKR SIZE	BKR OPTS	BKR KVA	PHASE	BKR KVA	BKR OPTS	BKR SIZE	DESCRIPTION	USE	CKT NO.
		SPACE, NO COVER				A				*SPACE, NO COVER*		
1			*50/2*			B			*20/1*	*PLUGS*		2
3						C				*SPACE, NO COVER*		4
5						A			*20/1*	*LIGHTS*		6
7		*DOORS*	*30/3*			B			*20/1*	*OUTSIDE PLUGS & LIGHTS*		8
9						C			*20/1*	*CRANES (2)*		10
11			*20/1*			A			*20/1*	*PLUGS SOUTH WALL*		12
13		*(TRIPPED)*	*50/2*			B				*SPACE, NO COVER*		14
15						C				*SPACE, NO COVER*		16
						A						18
		MAIN	*100/3*			B						
						C						

LOADS
PHASE A: (KVA)
PHASE B: (KVA)
PHASE C: (KVA)
TOTAL: (CONNECTED KVA)
(CONNECTED AMPS)

USE LEGEND	LOAD TYPE
H	HVAC
L	LIGHTING
M	MOTOR
O	OTHER
R	RECEPTACLE
P	PANEL

BREAKER OPTIONS
GFCI - GROUND FAULT CIRCUIT INTERRUPTER
LO - LOCK-ON DEVICE
PA - PADLOCK ATTACHMENT
ST - SHUNT TRIP

(E) LOADS INDICATED BY ITALICS
(N) LOADS BOLD

PANEL SCHEDULE

PANEL NAME: **C** VOLTAGE: 208 NEMA RATING: 12 NOTES:
MAINS RATING: 225A MCB PHASE: 3 AIC RATING: 35,000 MOUNTING: SURFACE
BUS RATING: 225A MCB WIRE: 4 DEMAND FACTOR: 0.85 LOCATION: SERVICE CENTER SHOP

CKT NO.	USE	DESCRIPTION	BKR SIZE	BKR OPTS	BKR KVA	PHASE	BKR KVA	BKR OPTS	BKR SIZE	DESCRIPTION	USE	CKT NO.
1	O	IWH-3	40/1		3.40	A	4.32				O	2
3	O	SECURITY ACCESS PANEL	20/1	LO	0.10	B	4.32		50/3	WELD RCPT 3	O	4
5	M	SUMP PUMP 1	20/1			C	4.32				O	6
7	H	HP-4	40/3		2.80	A	4.32				O	8
9	H				2.80	B	4.32		50/3	WELD RCPT 4	O	10
11	H				2.80	C	4.32				O	12
13	H	HP-5	45/3		3.10	A	1.87		50/2	LIFT-4	M	14
15	H				3.10	B	1.87				M	16
17	H				3.10	C	1.87		50/2	LIFT-5	M	18
19	H	HP-6	45/3		3.10	A	1.87				M	20
21	H				3.10	B	1.87		50/2	LIFT-6	M	22
23	H				3.10	C	1.87				M	24
25	R	BENCH WIREMOLD	20/1		1.08	A	2.16				M	26
27	R	BENCH WIREMOLD	20/1		1.08	B	2.16		30/3	HOIST 1	M	28
29	R	BENCH WIREMOLD	20/1		1.08	C	2.16				M	30
31	R	BENCH WIREMOLD	20/1		1.08	A	1.00		20/1	EHP SYSTEM	M	32
33	-	SPARE	20/1		0.58	B	1.00		20/1	BRAKE LATHE	M	34
35	-	SPARE	20/1		0.58	C	0.60		20/1	CORD REEL 1	O	36
37	-	SPARE	20/1		0.58	A	0.60		20/1	CORD REEL 2	O	38
39	-	SPARE	20/1		1.39	B	-		20/1	SPARE	-	40
41	-	SPARE	20/1		0.67	C	-		20/1	SPARE	-	42

LOADS
PHASE A: 31.3 (KVA)
PHASE B: 27.7 (KVA)
PHASE C: 26.5 (KVA)
TOTAL: 85.5 (CONNECTED KVA)
237.4 (CONNECTED AMPS)
DEMAND: 72.6 (DEMAND KVA)
201.8 (DEMAND AMPS)

USE LEGEND	LOAD TYPE
H	HVAC
L	LIGHTING
M	MOTOR
O	OTHER
R	RECEPTACLE
P	PANEL

BREAKER OPTIONS
GFCI - GROUND FAULT CIRCUIT INTERRUPTER
LO - LOCK-ON DEVICE
PA - PADLOCK ATTACHMENT
ST - SHUNT TRIP

REGISTERED PROFESSIONAL ENGINEER CHRISTOPHER A. BRUNNER No. E17660 Exp. 9/30/11 ELECTRICAL STATE OF CALIFORNIA

WINZLER & KELLY

NO.	DATE	REVISION	BY

SONOMA COUNTY WATER AGENCY

SCALE: NONE DATE: 5/25/2011
DRAWN: SMG
REVIEWED:

SERVICE CENTER RELOCATION (2025 AVIATION BOULEVARD)
ELECTRICAL SCHEDULES-1

02243-10-002
FILE NAME: 7449_E-602.dwg
CONTRACT NUMBER: 0-706-7 #01
DRAWING NUMBER: E-602
SHEET 48 OF 64

J:\02243 - SCWA\02243-10-002 SCWA Airport Service Center\CAD 02243-10-002\dwg\7449_E-602.dwg 06-06-11 01:14:17PM sgirard

REUSE OF DOCUMENTS: This document and the ideas and designs incorporated herein, as an instrument of professional service, is the property of Winzler & Kelly and shall not be reused in whole or in part for any other project without Winzler & Kelly's written authorization. © 2010 Winzler & Kelly

PANEL SCHEDULE

PANEL NAME: **D1** VOLTAGE: 208 NEMA RATING: 1 NOTES: SUBFEED LUGS TO D2
MAINS RATING: 400A MCB PHASE: 3 AIC RATING: 35,000 MOUNTING: SURFACE
BUS RATING: 400A WIRE: 4 LOCATION: (N) SERVICE CENTER ELECTRICAL ROOM

CKT NO.	USE	DESCRIPTION	BKR SIZE	BKR OPTS	BKR KVA	PHASE	BKR KVA	BKR OPTS	BKR SIZE	DESCRIPTION	USE	CKT NO.
1	R	CUBICLE FURNITURE	20/1		1.00	A	1.00	LO	20/1	FACP	O	2
3	R	CUBICLE FURNITURE	20/1		1.00	B	0.36		20/1	SHOP RECEPTACLES	R	4
5	R	CUBICLE FURNITURE	20/1		1.00	C	0.36		20/1	SHOP RECEPTACLES	R	6
7	R	CUBICLE FURNITURE	20/1		1.00	A	0.18		20/1	SHOP RECEPTACLES	R	8
9	R	RECEPTACLES	20/1		0.54	B	0.36		20/1	SHOP RECEPTACLES	R	10
11	R	RECEPTACLES	20/1		0.54	C	0.36		20/1	SHOP RECEPTACLES	R	12
13	R	RECEPTACLES	20/1		0.54	A	0.54		20/1	SHOP CEILING RECEPTS	R	14
15	R	RECEPTACLES	20/1		0.36	B	0.12		20/1	LCP-2 CONTROL POWER	P	16
17	R	RECEPTACLES	20/1		0.18	C	3.00		40/3	EMISSION DEVICE	O	18
19	R	RECEPTACLES	20/1		0.18	A	3.00				O	20
21	R	RECEPTACLES	20/1		0.18	B	3.00				O	22
23	R	RECEPTACLES	20/1		0.18	C	3.25		40/2	IWH-2.1	O	24
25	R	RECEPTACLES	20/1		0.36	A	3.25				O	26
27	R	RECEPTACLES	20/1		0.36	B	3.25		40/2	IWH-2.2	O	28
29	R	RECEPTACLES	20/1		0.54	C	3.25				O	30
31	R	RECEPTACLES	20/1		0.36	A	5.50		70/3	AIR COMPRESSOR	O	32
33	R	RECEPTACLES	20/1		0.18	B	5.50				O	34
35	R	RECEPTACLES	20/1		0.18	C	5.50				O	36
37	R	RECEPTACLES	20/1		0.18	A	9.51		100/3	PANEL E FEEDER	P	38
39	R	FIRE ALARM BELL	20/1		1.00	B	13.35				P	40
41	R	FIRE SMOKE DAMPERS	20/1		1.00	C	13.08				P	42

LOADS
PHASE A: 53.3 (KVA)
PHASE B: 55.8 (KVA)
PHASE C: 58.0 (KVA)
TOTAL: 167.2 (CONNECTED KVA)
464.4 (CONNECTED AMPS)

USE LEGEND / LOAD TYPE
H HVAC
L LIGHTING
M MOTOR
O OTHER
R RECEPTACLE
P PANEL

BREAKER OPTIONS
GFCI - GROUND FAULT CIRCUIT INTERRUPTER
LO - LOCK-ON DEVICE
PA - PADLOCK ATTACHMENT
ST - SHUNT TRIP

PANEL SCHEDULE

PANEL NAME: **D2** VOLTAGE: 208 NEMA RATING: 1 NOTES: SUBFED FROM D1
MAINS RATING: MLO PHASE: 3 AIC RATING: 35,000 MOUNTING: SURFACE
BUS RATING: 400A WIRE: 4 LOCATION: (N) SERVICE CENTER ELECTRICAL ROOM

CKT NO.	USE	DESCRIPTION	BKR SIZE	BKR OPTS	BKR KVA	PHASE	BKR KVA	BKR OPTS	BKR SIZE	DESCRIPTION	USE	CKT NO.
43	M	LIFT-1	50/2		1.90	A	0.48		20/1	EF-4	M	44
45	M				1.90	B	0.48		20/1	EF-5	M	46
47	M	LIFT-2	50/2		1.90	C	0.48		20/1	EF-6	M	48
49	M				1.90	A			20/1	SPARE	M	50
51	M	LIFT-3	50/2		1.90	B	0.86		20/1	ROLL-UP DOOR 1	M	52
53	M				1.90	C	1.66		30/1	ROLL-UP DOORS 2, 3	M	54
55	H				1.63	A	1.10		15/3	ROLL-UP DOORS 4, 5	M	56
57	H	FC-1	15/3		1.63	B	1.10				M	58
59	H				1.63	C	1.10				M	60
61	H				2.20	A	4.32		50/3	WELDER RECEPT. 1	O	62
63	H	HP-1	30/3		2.20	B	4.32				O	64
65	H				2.20	C	4.32				O	66
67	H				2.20	A	4.32		50/3	WELDER RECEPT. 2	O	68
69	H	HP-2	30/3		2.20	B	4.32				O	70
71	H				2.20	C	4.32				O	72
73	H				3.00	A	1.34		20/1	EXTERIOR LIGHTING	L	74
75	H	HP-3	45/3		3.00	B	1.18		20/1	INTERIOR LIGHTING	L	76
77	H				3.00	C	0.59		20/1	INTERIOR LIGHTING	L	78
79	P	HVAC CONTROL PANEL	20/1		0.25	A	0.95		20/1	INTERIOR LIGHTING	L	80
81	-	SPARE	20/1			B	0.95		20/1	INTERIOR LIGHTING	L	82
83	-	SPARE	20/1			C	0.87		20/1	INTERIOR LIGHTING	L	84

LOADS
PHASE A: 25.6 (KVA)
PHASE B: 26.0 (KVA)
PHASE C: 26.2 (KVA)
TOTAL: 77.8 (CONNECTED KVA)
216.1 (CONNECTED AMPS)

USE LEGEND / LOAD TYPE
H HVAC
L LIGHTING
M MOTOR
O OTHER
R RECEPTACLE
P PANEL

BREAKER OPTIONS
GFCI - GROUND FAULT CIRCUIT INTERRUPTER
LO - LOCK-ON DEVICE
PA - PADLOCK ATTACHMENT
ST - SHUNT TRIP

PANEL SCHEDULE

PANEL NAME: **E** VOLTAGE: 208 NEMA RATING: 1 NOTES: FED FROM D1
MAINS RATING: 100A MCB PHASE: 3 AIC RATING: 35,000 MOUNTING: SURFACE
BUS RATING: 100 WIRE: 4 LOCATION: (N) SERVICE CENTER ELECTRICAL ROOM

CKT NO.	USE	DESCRIPTION	BKR SIZE	BKR OPTS	BKR KVA	PHASE	BKR KVA	BKR OPTS	BKR SIZE	DESCRIPTION	USE	CKT NO.
1	R	FISH RECEPTACLES	20/1		0.18	A	0.36		20/1	EXTERIOR RECEPTACLES	R	2
3	R	FISH RECEPTACLES	20/1		0.18	B	1.00		20/1	IRRIGATION RECEPTACLES	R	4
5	R	FISH RECEPTACLES	20/1		0.18	C	1.08		20/1	EXTERIOR RECEPTACLES	R	6
7	R	FISH RECEPTACLES	20/1		0.54	A	0.36		20/1	FISH RECEPTACLES	R	8
9	R	FISH RECEPTACLES	20/1		0.36	B	0.36		20/1	FISH RECEPTACLES	R	10
11	R	FISH RECEPTACLES	20/1		0.18	C	0.54		20/1	FISH RECEPTACLES	R	12
13	-	SPARE	20/1			A	0.36		20/1	FISH RECEPTACLES	R	14
15	-	SPARE	20/1			B	3.60		40/2	ELECTRIC VEHICLE	O	16
17	-	SPARE	20/1			C	3.60			CHARGING STATION	O	18
19	-	SPARE	20/1			A	3.60		40/2	ELECTRIC VEHICLE	O	20
21	-	SPARE	20/1			B	3.60			CHARGING STATION	O	22
23	-	SPARE	20/1			C			20/1	SPARE	-	24
25	-	SPARE	20/1			A			20/1	SPARE	-	26
27	-	SPARE	20/1			B			20/1	SPARE	-	28
29	-	SPARE	20/1			C			20/1	SPARE	-	30
31	-	SPARE	20/1			A			20/1	SPARE	-	32
33	-	SPARE	20/1			B			20/1	SPARE	-	34
35	-	SPARE	20/1			C	3.25		20/2	IWH-1.1	O	36
37	R	BREAK ROOM PROJECTOR	20/1		0.86	A	3.25				O	38
39	O	MDF	20/1	LO	1.00	B	3.25		20/2	IWH-1.2	O	40
41	O	MDF	20/1	LO	1.00	C	3.25				O	42

LOADS
PHASE A: 9.5 (KVA)
PHASE B: 13.4 (KVA)
PHASE C: 13.1 (KVA)
TOTAL: 35.9 (CONNECTED KVA)
99.8 (CONNECTED AMPS)

USE LEGEND / LOAD TYPE
H HVAC
L LIGHTING
M MOTOR
O OTHER
R RECEPTACLE
P PANEL

BREAKER OPTIONS
GFCI - GROUND FAULT CIRCUIT INTERRUPTER
LO - LOCK-ON DEVICE
PA - PADLOCK ATTACHMENT
ST - SHUNT TRIP

REGISTERED PROFESSIONAL ENGINEER CHRISTOPHER A. KELLY No. E17660 Exp. 9/30/11 ELECTRICAL STATE OF CALIFORNIA

WINZLER & KELLY

NO.	DATE	REVISION	BY

SONOMA COUNTY WATER AGENCY

SCALE: NONE DATE: 5/25/2011
DRAWN: SMG
REVIEWED:

SERVICE CENTER RELOCATION (2025 AVIATION BOULEVARD)
ELECTRICAL SCHEDULES-2

02243-10-002
FILE NAME: 7449_E-603.dwg
CONTRACT NUMBER: 0-706-7 #01
DRAWING NUMBER: E-603
SHEET 49 OF 64

J:\02243 - SCWA\02243-10-002 SCWA Airport Service Center\CAD 02243-10-002\dwg\7449_E-603.dwg 06-06-11 01:14:22PM sgirard

REUSE OF DOCUMENTS: This document and the ideas and designs incorporated herein, as an instrument of professional service, is the property of Winzler & Kelly and shall not be reused in whole or in part for any other project without Winzler & Kelly's written authorization. © 2010 Winzler & Kelly

CONDUIT AND CABLE SCHEDULE

FEEDER NO.	DESCRIPTION	FROM	TO	AMPS	CONDUIT	WIRE SIZE	GROUND	NOTES
P-01	12KV FEEDER	(E) 12KV SWITCHGEAR	XFMR TX3A	20	(E) 4"	(3) #2 AWG 15KV EPR	#4 AWG BARE CU EQPT GND	EXTEND AND REUSE (E) CONDUIT FOR (N) FEEDER
P-02	12KV FEEDER	XFMR TX3A	XFMR TX3B	20	4"	(3) #2 AWG 15KV EPR	#4 AWG BARE CU EQPT GND	
P-03	SPARE	XFMR TX3B	CAP	NA	4"	PULL ROPE	N/A	EXTEND 4' BEYOND TRANSFORMER PAD AND CAP. BURY 3' BELOW GRADE.
P-04	SPARE	SEE SITE PLAN	SEE SITE PLAN	NA	4"	PULL ROPE	N/A	SPARE 12kV FEEDER CONDUIT
P-11	SERVICE CENTER ("SC") FEEDER	XFMR TX3A	SWITCHBOARD SC	600	(2) 4"	(2) SETS OF (4) 350KCMIL	N/A	SEE SINGLE LINE FOR SWITCHBOARD GROUNDING
P-12	PANEL A1 FEEDER	SWITCHBOARD SC	(E) PANEL A1	400	(E) 4"	(4) 500KCMIL	#3 AWG BARE CU	EXTEND AND REUSE (E) CONDUIT FOR (N) FEEDER
P-13	PANEL C FEEDER	SWITCHBOARD SC	PANEL C	225	2-1/2"	(4) #4/0 AWG	#4 AWG BARE CU	
P-14	PANEL B FEEDER	SWITCHBOARD SC	(E) PANEL B	100	1-1/4"	(4) #2 AWG	#8 AWG BARE CU	PROVIDE (N) CONDUIT TO (E) PANEL
P-15	EXISTING LOAD FEEDER	SWITCHBOARD SC	(E) LOAD	100	(E)	(4) #2 AWG	#8 AWG BARE CU	EXTEND AND REUSE (E) CONDUIT FOR (N) FEEDER
P-21	FLEET CENTER FEEDER	XFMR TX3B	FLEET CENTER MAIN CIRCUIT BREAKER	400	4"	(4) 500KCMIL	N/A	SEE SINGLE LINE FOR ENCLOSED CB GROUNDING
P-22	MTS NORMAL FEEDER	FLEET CENTER MAIN CIRCUIT BREAKER	MTS	400	4"	(4) 500KCMIL	#3 AWG BARE CU	
P-23	MTS EM FEEDER	EGU CONNECTION BOX	MTS	400	4"	(4) 500KCMIL	#3 AWG BARE CU	
P-24	FLEET CENTER FEEDER	MTS	CT ENCLOSURE	400	4"	(4) 500KCMIL	#3 AWG BARE CU	
P-25	FLEET CENTER FEEDER	CT ENCLOSURE	PANEL D1	400	4"	(4) 500KCMIL	#3 AWG BARE CU	
P-26	SITE LIGHTING FEEDER	LIGHTING CONTROL PANEL	SITE LIGHTING	20	1"	(2) #10 AWG	#10 AWG BARE CU	
P-27	PANEL D2 FEEDER	PANEL D1	PANEL D2	400	N/A	(4) 500KCMIL	#3 AWG BARE CU	PROVIDE SUBFEED LUGS IN EACH PANEL
P-28	PANEL E FEEDER	PANEL D1	PANEL E	100	1-1/4"	(4) #2 AWG	#8 AWG BARE CU	
S-01	208V SPARE CONDUIT	PANEL D1	PULL BOX BY GATE	N/A	2"	PULL ROPE	N/A	SEE SITE PLAN FOR ADDITIONAL INFO
S-02	208V SPARE CONDUIT	PANEL D1	PULL BOX BY GATE	N/A	2"	PULL ROPE	N/A	SEE SITE PLAN FOR ADDITIONAL INFO
T-01	COMM. LINE	SEE SITE PLAN		N/A	2"	FIBER BACKBONE CABLE	N/A	SEE SPECIFICATIONS FOR REQUIREMENTS
T-02	COMM. LINE	SEE SITE PLAN		N/A	2"		N/A	SPARE CONDUIT. CAP INSIDE BUILDING.
T-03	SECURITY CAMERA	FLEET CENTER ELEC. ROOM	LIGHTING POLE	N/A	1"	PULL ROPE	N/A	STUB UP INSIDE POLE BASE

ELECTRICAL SCHEDULE - MECHANICAL EQUIPMENT

EQUIP NO.	EQUIPMENT NAME	VOLTAGE	PHASE	HP	FLA	CB	CONDUIT	WIRE	DISCONNECT	NOTES
HP-1	HEAT PUMP 1	208	3		18.4	30/3	3/4"	(3) #10, #12 GND	30/3 NON-FUSED	
HP-2	HEAT PUMP 2	208	3		18.4	30/3	3/4"	(3) #10, #12 GND	30/3 NON-FUSED	
HP-3	HEAT PUMP 3	208	3		25.4	45/3	1"	(3) #8, #10 GND	60/3 NON-FUSED	
HP-4	HEAT PUMP 4	208	3		23.7	40/3	1"	(3) #8, #10 GND	60/3 NON-FUSED	
HP-5	HEAT PUMP 5	208	3		25.4	45/3	1"	(3) #8, #10 GND	60/3 NON-FUSED	
HP-6	HEAT PUMP 6	208	3		25.4	45/3	1"	(3) #8, #10 GND	60/3 NON-FUSED	
EF-4	EXHAUST FAN 4	120	1	FRAC		20/1	3/4"	(2) #12, #12 GND	20A SNAP SW	
EF-5	EXHAUST FAN 5	120	1	FRAC		20/1	3/4"	(2) #12, #12 GND	20A SNAP SW	
EF-6	EXHAUST FAN 6	120	1	FRAC		20/1	3/4"	(2) #12, #12 GND	20A SNAP SW	
FC-1	FAN COIL 1	208	3			15/3	3/4"	(3) #12, #12 GND	30/3 NON-FUSED	
IWH-1	INSTANT HOT WATER HEATER 1	208	1		15	(2) 40/2	1"	(4) #8, #10 GND	DISCONNECT IN DEVICE	
IWH-2	INSTANT HOT WATER HEATER 2	208	1		15	(2) 40/2	1"	(4) #8, #10 GND	DISCONNECT IN DEVICE	
IWH-3	INSTANT HOT WATER HEATER 3	120	1		28.3	40/1	3/4"	(2) #8, #10 GND	60/3 NON-FUSED	
SP-1	SUMP PUMP 1	120	1	FRAC		20/1	3/4"	(2) #12, #12 GND	20A SNAP SW	

LIGHTING FIXTURE SCHEDULE

TAG	DESCRIPTION	MANUFACTURER	LAMP	FIXTURE INPUT WATTS	MOUNTING	NOTES
A	2x4 INDIRECT TROFFER	DAYBRITE: 2-ST-G-2-32-PMW-120-1/2-EBHE	(2) F32T8	62	RECESSED	PROVIDE (2) 2-LAMP RAPID START ELECTRONIC BALLASTS IN EVERY OTHER FIXTURE AND WIRE FIXTURES IN TANDEM
B	RESTROOM FIXTURE	DAYBRITE: AVW-2-32-PMW-120-DEK	(2) F32T8	62	WALL	PROVIDE ELECTRONIC RAPID START BALLAST
C	8" CFL DOWNLIGHT	CAPRI: CM8-FV42-U	(1) CFTR42WGX2	46	RECESSED	PROVIDE ELECTRONIC RAPID START BALLAST. PROVIDE WET TRIM WHERE INDICATED ON DRAWINGS.
D1	INDUSTRIAL STRIP	HOLOPHANE: HSM-S-04-D-NHH-S-042-EP-2-U	(2) F32T8	62	SURFACE	PROVIDE ELECTRONIC RAPID START BALLAST
D2	SURFACE MOUNT FLUORESCENT	HOLOPHANE: LS-T-24-X-S-POL-O42-EP-2-1	(2) F32T8	62	SURFACE	PROVIDE ELECTRONIC RAPID START BALLAST
E1	HIGH BAY SHOP FLUORESCENT	HOLOPHANE: HB24-6-32-N1D20-PCL125WG-MVOLT-2/3	(6) F32T8	158	PENDANT, 15' AFF	PROVIDE (2) 3-LAMP RAPID START ELECTRONIC BALLASTS PER FIXTURE
E2	LOW BAY SHOP FLUORESCENT	HOLOPHANE: HB14-2-32-N1D20-PCL125WG- MVOLT	(2) F32T8	62	PENDANT, MOUNT TO MATCH (E) HEIGHT	PROVIDE ELECTRONIC RAPID START BALLAST
F	STORAGE PENDANT	HOLOPHANE: HSM-S-04-D-NHH-S-042-EP-2-U	(2) F32T8	62	AS INDICATED ON DRAWINGS	PROVIDE ELECTRONIC RAPID START BALLAST. FIXTURE SHALL BE SUITABLE FOR USE IN DAMP LOCATION.
G	EXTERIOR WALL PACK	LSI: SIFCM-WB-70-MH-F-MT-BLK	M70	86	WALL	PROVIDE ELECTRONIC BALLAST
H	POLE FIXTURE	LSI: CT2H-FT-250-PSMH-F-MT-BLM-PCR	M250	295	POLE, 25' AFG	PROVIDE 25' TALL 4" SQUARE STRAIGHT STEEL POLE WITH CONCRETE POLE BASE. PROVIDE 208V PHOTOCELL AND CONNECT IN FIELD
X	EXIT SIGN	TELESIS: TLXCOM-RU-W	LED	4	SURFACE	LED EXIT WITH DUAL MR16 EGRESS HEADS AND 90-MINUTE EMERGENCY BATTERY BACKUP

ELECTRICAL SCHEDULE - SHOP EQUIPMENT

EQUIP NO.	EQUIPMENT NAME	VOLTAGE	PHASE	HP	FLA	CB	CONDUIT	WIRE	DISCONNECT	NOTES
L-1	LIFT-1	208	1		18	50/2	3/4"	(3) #6, #10 GND	60/3 NON-FUSED	MOUNT DISCONNECT ON EQUIPMENT
L-2	LIFT-2	208	1		18	50/2	3/4"	(3) #6, #10 GND	60/3 NON-FUSED	MOUNT DISCONNECT ON EQUIPMENT
L-3	LIFT-3	208	1		18	50/2	3/4"	(3) #6, #10 GND	60/3 NON-FUSED	MOUNT DISCONNECT ON EQUIPMENT
L-4	LIFT-4	208	1		18	50/2	3/4"	(3) #6, #10 GND	60/3 NON-FUSED	MOUNT DISCONNECT ON EQUIPMENT
L-5	LIFT-5	208	1		18	50/2	3/4"	(3) #6, #10 GND	60/3 NON-FUSED	MOUNT DISCONNECT ON EQUIPMENT
L-6	LIFT-6	208	1		18	50/2	3/4"	(3) #6, #10 GND	60/3 NON-FUSED	MOUNT DISCONNECT ON EQUIPMENT
W-1	WELDER RECEPT.	208	3			50/3	1-1/4"	(4) #6, #10 GND	RECEPT. ONLY	NEMA RECEPTACLE TO MATCH DEVICE
W-2	WELDER RECEPT.	208	3			50/3	1-1/4"	(4) #6, #10 GND	RECEPT. ONLY	NEMA RECEPTACLE TO MATCH DEVICE
W-3	WELDER RECEPT.	208	3			50/3	1-1/4"	(4) #6, #10 GND	RECEPT. ONLY	NEMA RECEPTACLE TO MATCH DEVICE
W-4	WELDER RECEPT.	208	3			50/3	1-1/4"	(4) #6, #10 GND	RECEPT. ONLY	NEMA RECEPTACLE TO MATCH DEVICE
E-1	EMISSION RECEPT.	208	3			40/3	1"	(4) #8, #10 GND	RECEPT. ONLY	COORDINATE EXACT RECEPT. CONFIGURATION WITH OWNER
D-1	ROLL-UP DOOR	120	1	1/2		20/1	3/4"	(2) #12, #12 GND	30/3 NON-FUSED	
D-2	ROLL-UP DOOR	120	1	3/4		30/1	3/4"	(2) #12, #12 GND	30/3 NON-FUSED	
D-3	ROLL-UP DOOR	120	1	3/4		30/1	3/4"	(3) #12, #12 GND	30/3 NON-FUSED	
D-4	ROLL-UP DOOR	208	3	1		15/3	3/4"	(3) #12, #12 GND	30/3 NON-FUSED	
D-5	ROLL-UP DOOR	208	3	1		15/3	3/4"	(3) #12, #12 GND	30/3 NON-FUSED	
AC-1	COMPRESSOR	208	3	15	46.2	70/3	1-1/4"	(3) #4, #8 GND	100/3 NON-FUSED	
H-1	HOIST 1	208	3	5	16.7	30/3	1"	(4) #10, #8 GND	30/3 NON-FUSED	
EHP	EHP SYSTEM	120	1			20/1			O/H DROP TO RECEPT	
BL	BRAKE LATHE	120	1			20/1			RECEPT. ONLY	

REGISTERED PROFESSIONAL ENGINEER CHRISTOPHER A. SANDERS No. E17660 Exp. 9/30/11 ELECTRICAL STATE OF CALIFORNIA

WINZLER & KELLY

NO.	DATE	REVISION	BY

SONOMA COUNTY WATER AGENCY

SCALE: NONE
DATE: 5/25/2011
DRAWN: SMG
REVIEWED:

SERVICE CENTER RELOCATION (2025 AVIATION BOULEVARD)

ELECTRICAL SCHEDULES-3

02243-10-002

FILE NAME: 7449_E-604.dwg
CONTRACT NUMBER: 0-706-7 #01

DRAWING NUMBER: E-604

SHEET 50 OF 64

J:\02243 - SCWA\02243-10-002 SCWA Airport Service Center\CAD 02243-10-002\dwg\7449_E-604.dwg 06-06-11 01:14:27PM sgirard

REUSE OF DOCUMENTS: This document and the ideas and designs incorporated herein, as an instrument of professional service, is the property of Winzler & Kelly and shall not be reused in whole or in part for any other project without Winzler & Kelly's written authorization. © 2010 Winzler & Kelly

PANEL NAME: **LCP-1**
LOCATION: EXISTING SERVICE CENTER ELECTRICAL ROOM
ENCLOSURE:
POWER CIRCUIT: (E) PANEL A1-13

RELAY NO.	CIRCUIT NO.	LV SWITCH OR SENSOR	DESCRIPTION OF AREA CONTROLLED	AUTOMATION CHANNEL A	B	C	D	E	F	G	H	NOTES
1			(spare)									(spare)
2			(spare)									(spare)
3	A-1	c	101A	X								124 watts
4	A-1	d	101A	X								124 watts
5	A-1	e	101 (BELOW MEZZANINE)	X								124 watts
6	A-1	f	101 (BELOW MEZZANINE)	X								62 watts
7	N/A	g	101B,C,D,E (TIME SIGNAL ONLY)	X								ENABLE SIGNAL TO POWER PACK
8			(spare)									(spare)
9	A-3	i	102	X								248 watts
10	A-3	j	102	X								248 watts
11	A-5	k	103	X								248 watts
12	A-5	l	103	X								186 watts
13	A-1	m	104	X								248 watts
14	A-1	n	104	X								186 watts
15	A-7	o	107	X								124 watts
16	A-7	p	107	X								124 watts
17	A-7	q	107 SHOWER				X					46 watts
18	A-7	r	108	X								186 watts
19	A-7	s	108	X								186 watts
20	A-7	t	109	X								124 watts
21	A-7	u	109	X								124 watts
22	A-9	v	EXTERIOR WALL PACKS					X				520 watts
23			(spare)									(spare)
24			(spare)									(spare)

LIGHTING CONTROL PANEL RELAY SCHEDULE

PANEL NAME: **LCP-2**
LOCATION: NEW SERVICE CENTER ELECTRICAL ROOM
ENCLOSURE:
POWER CIRCUIT: PANEL D1-16

RELAY NO.	CIRCUIT NO.	LV SWITCH OR SENSOR	DESCRIPTION OF AREA CONTROLLED	AUTOMATION CHANNEL A	B	C	D	E	F	G	H	NOTES
1		a	(spare)									(spare)
2		b	(spare)									(spare)
3	D-76	c	WALKWAY			X						138 watts
4			(spare)									(spare)
5	N/A	e	OPEN OFFICE - WATER EDUCATION		X							ENABLE SIGNAL TO POWER PACK
6			(spare)									(spare)
7	N/A	g	OPEN OFFICE - LEAD CUBICLES		X							ENABLE SIGNAL TO POWER PACK
8			(spare)									(spare)
9	N/A	i	OPEN OFFICE - CUBICLES		X							ENABLE SIGNAL TO POWER PACK
10			(spare)									(spare)
11	N/A	k	BREAK ROOM	X								ENABLE SIGNAL TO POWER PACK
12			(spare)	X								(spare)
13			(spare)									(spare)
14			(spare)									(spare)
15	D-80	o	SHOP	X								948 watts
16	D-82	p	SHOP	X								948 watts
17	N/A	q	FISHERIES	X								ENABLE SIGNAL TO POWER PACK
18			(spare)									(spare)
19	D-84	s	FISHERIES STORAGE				X					124 watts
20	D-84	t	FISHERIES STORAGE				X					124 watts
21	D-84	u	COVERED STORAGE				X					124 watts
22	D-84	v	COVERED STORAGE				X					124 watts
23	D-74	w	BUILDING PERIMETER					X				750 watts
24	D-74	x	SITE LIGHTS					X				590 watts

LIGHTING CONTROL CHANNEL AUTOMATION SCHEDULE

PANEL(S): **LCP-1, LCP-2**

CHANNEL	DESCRIPTION	CONTROL SCENARIO (SEE BELOW)	ON/OCCUPIED TIME	OFF/UNOCCUPIED TIME	FLICK WARN	TIME DELAY
A	GENERAL	2	N/A	5:30PM	X	
B	OPEN OFFICE	2	N/A	5:30PM	X	
C	WALKWAY	2	N/A	5:30PM	X	
D	STORAGE	2	N/A	N/A	X	60 MINS
E	EXTERIOR	3	N/A	N/A		
F						
G						
H						

AUTOMATION SCHEDULES:
(1) AUTO ON / AUTO OFF
(2) MANUAL ON / AUTO OFF
(3) DUSK - DAWN
(4) DUSK - AUTO OFF

REGISTERED PROFESSIONAL ENGINEER CHRISTOPHER A. RAYNER No. E17660 Exp. 9/30/11 ELECTRICAL STATE OF CALIFORNIA

WINZLER & KELLY

NO.	DATE	REVISION	BY

SONOMA COUNTY WATER AGENCY

SCALE: NONE
DATE: 5/25/2011
DRAWN: SMG
REVIEWED:

SERVICE CENTER RELOCATION (2025 AVIATION BOULEVARD)
ELECTRICAL SCHEDULES-4

02243-10-002
FILE NAME: 7449_E-605.dwg
CONTRACT NUMBER: 0-706-7 #01
DRAWING NUMBER: E-605
SHEET 51 OF 64

J:\02243 - SCWA\02243-10-002 SCWA Airport Service Center\CAD 02243-10-002\dwg\7449_E-605.dwg 06-06-11 01:14:32PM sgifrard

REUSE OF DOCUMENTS: This document and the ideas and designs incorporated herein, as an instrument of professional service, is the property of Winzler & Kelly and shall not be reused in whole or in part for any other project without Winzler & Kelly's written authorization. © 2010 Winzler & Kelly

SEQUENCE OF EVENTS NOTES

ACTIVATION OF AN INITIATING DEVICE (MANUAL PULL STATION, DUCT SMOKE DETECTOR, OR FLOW / TAMPER SWITCH) WILL RESULT IN THE FOLLOWING: SOUNDING OF HORN, FLASHING OF STROBE, RELEASE OF MAGNETICALLY-HELD DOORS, AND FIRE SMOKE DAMPERS.

THE AUDIBLE AND VISUAL ALARM SIGNALS CAN BE SILENCED BY ACKNOWLEDGMENT AT THE FIRE ALARM CONTROL PANEL. A SUBSEQUENT ALARM INITIATION AFTER ACKNOWLEDGMENT WILL CAUSE THE PANEL TO REVERT TO THE ALARM CONDITION.

SYSTEM OR WIRING DERANGEMENT WILL RESULT IN A VISUAL AND AUDIBLE TROUBLE SIGNAL AT THE FIRE ALARM CONTROL PANEL.

AFTER SYSTEM ALARM OR SYSTEM TROUBLE CONDITIONS HAVE BEEN CORRECTED, THE SYSTEM MUST BE RESET AT THE CONTROL PANEL TO CLEAR THE VISUAL TROUBLE INDICATIONS ON THE FACE OF THE PANEL.

UPON ALARM ACTIVATION, TROUBLE OR SUPERVISORY CONDITIONS AUTOMATIC FIRE ALARM SYSTEM SHALL TRANSMIT THE ALARM, SUPERVISORY AND TROUBLE SIGNALS TO AN APPROVED SUPERVISING STATION AS REQUIRED BY NFPA 72 AS AMENDED BY ARTICLE 91.

NOTIFICATION APPLIANCE CIRCUITS SHALL BE DESIGNED SO THAT AUDIBLE SIGNAL MAY BE SILENCED WHILE THE VISUAL STROBES CONTINUE TO OPERATE.

FIRE ALARM SCOPE OF WORK

1. THE FIRE ALARM SYSTEM IS A DEFERRED APPROVAL ITEM. PROVIDE A COMPLETE FIRE ALARM SYSTEM SUBMITTAL PACKAGE FOR REVIEW AND APPROVAL BY THE FIRE DEPARTMENT. THE PACKAGE SHALL CONSIST OF COMPLETE SHOP DRAWINGS INCLUDING PLANS, DIAGRAMS, BATTERY CALCULATIONS, VOLTAGE DROP CALCULATIONS, EQUIPMENT SCHEDULES, CSFM LISTING SHEETS, AND PRODUCT CUT SHEETS.
2. THE FIRE ALARM SYSTEM SCOPE OF WORK INCLUDES A NEW FIRE ALARM CONTROL PANEL, A NEW PULL STATION AND HORN/STROBE IN A CONTINUOUSLY OCCUPIED SPACE, AND CONNECTIONS FOR MONITORING THE FIRE RISER FLOW, TAMPER SWITCH, AND ACTIVATION OF THE BELL.

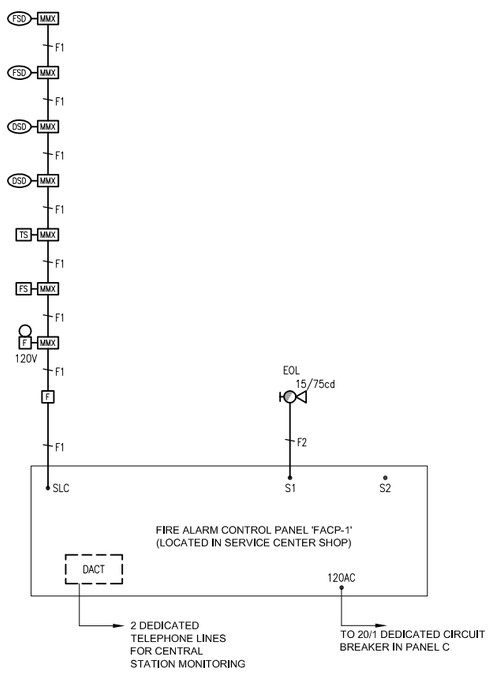

1 **FIRE ALARM RISER - NEW SERVICE CENTER**

SCALE: NTS

FIRE ALARM CABLE SCHEDULE

CABLE TYPE	CABLE DESCRIPTION	MANUFACTURER	USAGE
F1	2 CONDUCTOR #16 TWISTED SHIELDED TYPE TC.	WEST PENN #TC1601	FIRE ALARM SIGNALING LINE CIRCUIT CABLE
F2	(2) #14 AWG	THWN	NOTIFICATION APPLIANCE CIRCUIT
F3	4 CONDUCTOR #16 AWG CABLE	WEST PENN #D990	ANNUNCIATOR INTERCONNECT CABLE
F4	2 CONDUCTOR #16 TWISTED GEL FILLED UNDERGROUND CABLE	WEST PENN #AQ225	UNDERGROUND NETWORK CABLE

FIRE ALARM SYSTEM OPERATION MATRIX

	ANNUNCIATE DEVICE TYPE AND ZONE AT FACP AND ANNUNCIATOR	ANNUNCIATE SUPERVISORY CONDITION AT FACP AND ANNUNCIATOR	ANNUNCIATE TROUBLE CONDITION AT FACP AND ANNUNCIATOR	ACTIVATE HORNS AND STROBES THROUGHOUT BUILDING	SEND ALARM SIGNAL TO CENTRAL MONITORING STATION	SEND SUPERVISORY SIGNAL TO CENTRAL MONITORING STATION	SEND TROUBLE SIGNAL TO CENTRAL MONITORING STATION	SHUTDOWN ASSOCIATED FAN AND FIRE SMOKE DAMPER	SHUTDOWN ALL HVAC UNITS AND FIRE SMOKE DAMPERS IN ASSOCIATED ZONE	RELEASE MAGNETICALLY HELD DOOR		NOTES
MANUAL PULL STATION	X			X	X					X		
SMOKE DETECTOR	X			X	X				X	X		
DUCT SMOKE DETECTOR	X			X	X			X		X		
HEAT DETECTOR	X			X	X				X	X		
SMOKE DETECTOR AT ELEVATOR	X			X	X					X		
PIV TAMPER SWITCH		X				X						
SPRINKLER TAMPER SWITCH		X				X						
SPRINKLER FLOW SWITCH	X			X	X					X		
OS&Y TAMPER SWITCH		X				X						
SYSTEM TROUBLE			X				X					
COMMUNICATION FAILURE			X				X					
OPEN			X				X					
SHORT			X				X					
GROUND FAULT			X				X					

FIRE ALARM SYSTEM NOTES

1. UPON COMPLETION OF THE FIRE PROTECTIVE SIGNALING EQUIPMENT A SATISFACTORY FINAL TEST OF THE ENTIRE SYSTEM SHALL BE MADE IN THE PRESENCE OF THE LOCAL FIRE AUTHORITY WHO SHALL ASSIST/WITNESS SUCH TEST WHEN AVAILABLE. (SEE NOTE 2 BELOW) PART 3-700, TITLE 24 CCR AND SECTION 2-009, CHAPTER 72, TITLE 24 CCR. CONTRACTOR SHALL NOTIFY LOCAL FIRE AUTHORITY OF DATE AND TIME OF FINAL TEST AND PROVIDE A "CERTIFICATE OF COMPLETION" AS PER NFPA 72 SECTION 1-7.21 AND FIG. 1-7.21 TO THE IOR.
2. ENFORCING FIRE AGENCY: LOCAL FIRE DEPARTMENT.
3. SYSTEM: CLASS B, ADDRESSABLE PULL STATION, MANUAL SYSTEM.
4. SYSTEM NOTIFICATION: SUPERVISING STATION. AUTOMATIC FIRE ALARM SYSTEMS SHALL TRANSMIT THE ALARM, SUPERVISORY AND TROUBLE SIGNALS TO AN APPROVED SUPERVISING STATION AS REQUIRED BY NFPA 72 AS AMENDED BY ARTICLE 91. THE SUPERVISING STATION SHALL BE LISTED AS EITHER UUFX OR UUJS BY UNDERWRITERS LABORATORY OR SHALL MEET THE REQUIREMENTS OF FACTORY MUTUAL RESEARCH APPROVAL STANDARD 3011.
5. PROVIDE CONDUIT FOR ALL FIRE ALARM WIRING AS FOLLOWS. UNDERGROUND: PVC SCHEDULE 40 WITH ALL PORTIONS BURIED A MINIMUM OF 24" BELOW GRADE. WITHIN BUILDINGS: METAL CONDUIT WITH SET-SCREW STEEL FITTINGS. BUILDING EXTERIOR: METAL CONDUITS WITH WATER TIGHT FITTINGS. (CEC 110-11 AND 300-6). SEE SPECIFICATION SECTION 16050 FOR ADDITIONAL CONDITIONS OF USE FOR CONDUIT INSTALLATION.
6. AUDIBLE DEVICES SHALL BE AT LEAST 15dbA ABOVE AVERAGE AMBIENT SOUND LEVEL BUT NOT LESS THAN 75dbA AT 10' OR MORE THAN 110dbA IN TOTAL, THROUGHOUT. (NFPA72 SEC. 6-3.1 AND CFC1007.3.3.3.3).
7. PROVIDE CALIFORNIA UNIFORM FIRE ALARM SIGNAL IN TEMPORAL MODE - THREE DISTINCTIVE FIRE ALARM SOUNDS, (ANSI S3.41) (PER CFC SEC. 1007.3.3.3.2, NFPA 72 SEC. 3-7.2).
8. VISUAL DEVICES SHALL NOT EXCEED 2 FLASHES PER SECOND AND SHALL NOT BE SLOWER THAN 1 FLASH EVERY SECOND (NFPA 72 SEC. 6-4.2).
9. FIRE ALARM MOUNTING HEIGHTS: SEE FIRE ALARM DEVICE ELEVATION DETAIL ON THIS SHEET.
10. POWER SOURCES TO FIRE ALARM PANELS AND EQUIPMENT SHALL CONSIST OF A 20 AMP 1 POLE DEDICATED CIRCUIT BREAKER IN THE LOCAL POWER PANEL. CIRCUIT AND CONNECTIONS SHALL BE MECHANICALLY PROTECTED. CIRCUIT BEAKER SHALL HAVE A RED MARKING AND BE IDENTIFIED AS "FIRE ALARM CIRCUIT CONTROL."

REGISTERED PROFESSIONAL ENGINEER CHRISTOPHER A. GALLIGAN No. E17660 Exp. 9/30/11 ELECTRICAL STATE OF CALIFORNIA

WINZLER & KELLY

NO.	DATE	REVISION	BY

SONOMA COUNTY WATER AGENCY

SCALE: NONE | DATE: 5/25/2011
DRAWN: SMG
REVIEWED:

SERVICE CENTER RELOCATION (2025 AVIATION BOULEVARD)

FIRE ALARM RISER AND DETAILS

02243-10-002
FILE NAME: 7449_E-606.dwg
CONTRACT NUMBER: 0-706-7 #01
DRAWING NUMBER: E-606
SHEET 52 OF 64

J:\02243 - SCWA\02243-10-002 SCWA Airport Service Center\CAD 02243-10-002\dwg\7449_E-606.dwg 06-06-11 01:14:37PM sgirard

REUSE OF DOCUMENTS: This document and the ideas and designs incorporated herein, as an instrument of professional service, is the property of Winzler & Kelly and shall not be reused in whole or in part for any other project without Winzler & Kelly's written authorization. © 2010 Winzler & Kelly

J:\02243 - SCWA\02243-10-002 SCWA Airport Service Center\CAD 02243-10-002\dwg\7449_E-701.dwg 06-06-11 01:14:42PM sgirard

CERTIFICATE OF COMPLIANCE (Part 1 of 4) LTG-1C

Project Name: Service Center Relocation — Date: 5/24/2011

Project Address: 2025 Aviation Blvd Santa Rosa — Climate Zone: 2 — Total Cond. Floor Area: 14,091 — Unconditioned Floor Area: 0

GENERAL INFORMATION

Building Type:	☒ Nonresidential	☐ High-Rise Residential	☐ Hotel/Motel Guest Room
☐ School	☐ Relocatable Public School	☒ Conditioned Spaces	☐ Unconditioned Spaces
Phase of Construction:	☐ New Construction	☐ Addition	☒ Alteration
Method of Compliance:	☒ Complete Building	☐ Area Category	☐ Tailored

Documentation Author's Declaration Statement

I certify that this Certificate of Compliance documentation is accurate and complete.

Name: Chris Richards — Signature: Chris Richards

Company: WINZLER & KELLY — Date: 5/24/2011

Address: 2235 Mercury Way Ste. 150 — CEA # — CEPE #

City/State/Zip: Santa Rosa, CA 95407 — Phone: (707) 523-1010

The Principal Lighting Designer's Declaration Statement

- I am eligible under Division 3 of the California Business and Professional Code to accept responsibility for the lighting design.
- This Certificate of Compliance identifies the lighting features and performance specifications required for compliance with Title 24, Pages 1 and 6 of the California Code of Regulations.
- The design features represented on this Certificate of Compliance are consistent with the information provided to document this design on the other applicable compliance forms, worksheets, calculations, plans and specifications submitted to the enforcement agency for approval with this building permit application.

Name: Chris Richards — Signature: Chris Richards

Company: Winzler and Kelly — Phone: (707) 523-1010

Address: 2235 Mercury Way, Ste 150 — License #

City/State/Zip: Santa Rosa, CA 95407 — Date

Lighting Mandatory Measures
Indicate location on building plans of Mandatory Measures Note Block: ____________

LIGHTING COMPLIANCE FORMS & WORKSHEETS (check box if worksheets is included)

For detailed instructions on the use of this and all Energy Efficiency Standards compliance forms, please refer to the Nonresidential Manual published by the California Energy Commission.

☒	LTG-1C Pages 1 through 4	Certificate of Compliance. All Pages required on plans for all submittals.
☒	LTG-2C	Lighting Controls Credit Worksheet
☒	LTG-3C	Indoor Lighting Power Allowance
☐	LTG-4C Pages 1 through 4	Tailored Method Worksheet
☐	LTG-5C Pages 1 and 2	Line Voltage Track Lighting Worksheet

EnergyPro 5.1 by EnergySoft User Number: 4188 RunCode: 2011-05-24T17:13:11 ID: 0224310002 Page 3 of 13

CERTIFICATE OF COMPLIANCE (Part 2 of 4) LTG-1C

Project Name: Service Center Relocation — Date: 5/24/2011

INDOOR LIGHTING SCHEDULE and FIELD INSPECTION ENERGY CHECKLIST

Installation Certificate, LTG-1-INST (Retain a copy and verify form is completed and signed.) — Field Inspector ☐

Certificate of Acceptance, LTG-2A and LTG-3A (Retain a copy and verify form is completed and signed.) — Field Inspector ☐

A separate Lighting Schedule Must Be Filled Out for Conditioned and Unconditioned Spaces Installed Lighting Power listed on this Lighting Schedule is only for:

☒ CONDITIONED SPACE ☐ UNCONDITIONED SPACE

☒ The actual indoor lighting power listed below includes all installed permanent and portable lighting systems in accordance with §146(a).

☒ Only for offices: Up to the first 0.2 watts per square foot of portable lighting shall not be required to be included in the calculation of actual indoor lighting power density in accordance with the Exception to §146(a). All portable lighting in excess of 0.2 watts per square foot is totaled below.

A	B	C	D	E		F	G	H	
Name or Item Tag	Luminaire (Type, Lamps, Ballasts): Complete Luminaire Description[1] (i.e., 3 lamp fluorescent troffer, F32T8, one dimmable electronic ballast)		Watts per Luminaire[1]	How wattage was determined: CEC Default From NA8	According To §130 (d or e)	Number of Luminaires	Installed Watts (D X F)	Field Inspector[2] Pass	Fail
	Standard Allowance: 6528 sqft at 0.850 w/sf			☐	☐		5,549	☐	☐
	Standard Allowance: 7563 sqft at 1.000 w/sf			☐	☐		7,563	☐	☐

Installed Watts Page Total: 13,112

Building total number of pages: — Installed Watts Building Total (Sum of all pages) — Enter into LTG-1C Page 4 of 4: 13,112

1. Wattage shall be determined according to Section 130 (d and e). Wattage shall be rating of light fixture, not rating of bulb.
2. If Fail then describe on Page 2 of the Inspection Checklist Form and take appropriate action to correct. Verify building plans if necessary.

EnergyPro 5.1 by EnergySoft User Number: 4188 RunCode: 2011-05-24T17:13:11 ID: 0224310002 Page 4 of 13

CERTIFICATE OF COMPLIANCE (Part 4 of 4) LTG-1C

Project Name: Service Center Relocation — Date: 5/24/2011

CONDITIONED AND UNCONDITIONED SPACE LIGHTING MUST NOT BE COMBINED FOR COMPLIANCE

Indoor Lighting Power for Conditioned Spaces		Watts	Indoor Lighting Power for Unconditioned Spaces		Watts
Installed Lighting (from Conditioned LTG-1C, Page 2)		13,112	Installed Lighting (from Unconditioned LTG-1C, Page 2)		0
Lighting Control Credit Conditioned Spaces (from LTG-2C)	-	0	Lighting Control Credit Unconditioned Spaces (from LTG-2C)	-	0
Adjusted Installed Lighting Power	=	13,112	Adjusted Installed Lighting Power	=	0
Complies if Installed ≤ Allowed		↕	Complies if Installed ≤ Allowed		↕
Allowed Lighting Power Conditioned Spaces (from LTG-3C or PERF-1)		14,091	Allowed Lighting Power Unconditioned Spaces (from LTG-3C)		0

Required Acceptance Tests

Designer:
This form is to be used by the designer and attached to the plans. Listed below is the acceptance test for the Lighting system, **LTG-2A and LTG-3A**. The designer is required to check the acceptance tests and list all control devices serving the building or space shall be certified as meeting the Acceptance Requirements for Code Compliance. If all the lighting system or control of a certain type requires a test, list the different lighting and the number of systems. The NA7 Section in the Appendix of the Nonresidential Reference Appendices Manual describes the test. Since this form will be part of the plans, completion of this section will allow the responsible party to budget for the scope of work appropriately. **Forms can be grouped by type of Luminaire controlled.**

Enforcement Agency:
Systems Acceptance. Before Occupancy Permit is granted for a newly constructed building or space or when ever new lighting system with controls is installed in the building or space shall be certified as meeting the Acceptance Requirements.
The **LTG-2A and LTG-3A** forms are not considered complete forms and are not to be accepted by the enforcement agency unless the boxes are checked and/or filled and signed. In addition, a Certificate of Acceptance forms shall be submitted to the enforcement agency that certifies plans, specifications, installation certificates, and operating and maintenance information meet the requirements of §10-103(b) of Title 24 Part 6. The field inspector must receive the properly filled out and signed forms before the building can receive final occupancy. A copy of the **LTG-2A and LTG-3A** for each different lighting luminaire control(s) must be provided to the owner of the building for their records.

Luminaires Controlled				LTG-2A and LTG-3A
Equipment Requiring Testing	Description	Number of Luminaires controlled	Location	Controls and Sensors and Automatic Daylighting Controls Acceptance

EnergyPro 5.1 by EnergySoft User Number: 4188 RunCode: 2011-05-24T17:13:11 ID: 0224310002 Page 6 of 13

INDOOR LIGHTING POWER ALLOWANCE LTG-3C

Project Name: Service Center Relocation — Date: 5/24/2011

ALLOWED LIGHTING POWER (Chose One Method)

A Separate LTG-3C must be filled out for Conditioned and Unconditioned Spaces. Indoor Lighting Power Allowances listed on this page are only for:

☒ CONDITIONED SPACES ☐ UNCONDITIONED SPACES

COMPLETE BUILDING METHOD

BUILDING CATEGORY (From §146 Table 146-E)	WATTS PER (ft^2)	X	COMPLETE BLDG. AREA	=	ALLOWED WATTS
	1.0		14,091		14,091
		TOTALS	AREA		WATTS

AREA CATEGORY METHOD

BUILDING CATEGORY (From §146 Table 146-F)	WATTS PER (ft^2)	X	Area ft^2	=	ALLOWED WATTS
		TOTALS	AREA		WATTS

TAILORED METHOD

Total Allowed Watts using the Tailored Method taken from LTG-4C (Page 1 of 4) Row 3

The indoor lighting power allowance using the Tailored Method of compliance shall be determined using the LTG-4C set of forms. A separate set of LTG-4C forms shall be filled out for CONDITIONED and UNCONDITIONED spaces.

EnergyPro 5.1 by EnergySoft User Number: 4188 RunCode: 2011-05-24T17:13:11 ID: 0224310002 Page 7 of 13

LIGHTING MANDATORY MEASURES: NONRESIDENTIAL LTG-MM

Project Name: Service Center Relocation — Date: 5/24/2011

Indoor Lighting Measures:

§131(d): **Shut-off Controls**

1.	For every floor, all interior lighting systems shall be equipped with a separate automatic control to shut off the lighting. This automatic control shall meet the requirements of Section 119 and may be an occupancy sensor, automatic time switch, or other device capable of automatically shutting off the lighting.
2.	Override for Building Lighting Shut off. The automatic building shut off system is provided with a manual, accessible override switch in sight of the lights. The area of override is not to exceed 5,000 square feet.
§119(h):	Automatic Control Devices Certified: All automatic control devices specified are certified, all alternate equipment shall be certified and installed as directed by the manufacturer.
§111:	Fluorescent Ballast and Luminaires Certified: All fluorescent fixtures specified for the project are certified and listed in the Directory. All installed fixtures shall be certified.
§131(a):	Individual Room/Area Controls: Each room and area in this building is equipped with a separate switch or occupancy sensor device for each area with floor-to-ceiling walls.
§131(b):	Uniform Reduction for Individual Rooms: All rooms and areas greater than 100 square feet and more than 0.8 watts per square foot of lighting load shall be controlled with bi-level switching for uniform reduction of lighting within the room.
§131(c):	Daylight Area Control: All rooms with windows and skylights that are greater than 250 square feet and that allow for the effective use of daylight in the area shall have 50% of the lamps in each daylit area controlled by a separate switch; or the effective use of daylight cannot be accomplished because the windows are continuously shaded by a building on the adjacent lot. Diagram of shading during different times of the year is included on plans.
§131(c):	Display Lighting. Display lighting shall be separately switched on circuits that are 20 amps or less.&

Outdoor Lighting Measures:

§130(c)1:	Mandatory lighting power determination for medium base sockets without permanently installed ballasts
§132(a):	All permanently installed luminaires with lamps rated over 100 Watts either have a lamp efficacy of at least 60 lumens per Watt or are controlled by a motion sensor.
§132(b):	All Luminaires with lamps rated greater than 175 Watts in hardscape area, including parking lots, building entrances, canopies, and all outdoor sales areas meet the Cutoff Requirements.
§132(c)1:	All permanently installed outdoor lighting meets the control requirements listed.
§132(c):	Building facades, parking lots, garages, canopies, and outdoor sales areas meet the Multi-Level Lighting Requirements listed.

EnergyPro 5.1 by EnergySoft User Number: 4188 RunCode: 2011-05-24T17:13:11 ID: 0224310002 Page 8 of 13

CERTIFICATE OF COMPLIANCE (Part 1 of 4) OLTG-1C

Project Name: Service Center Relocation — Date: 5/24/2011

Project Address: 2025 Aviation Blvd Santa Rosa, CA 95403 — Total Illuminated Area: 18,871

GENERAL INFORMATION

Phase of Construction: ☐ New Construction ☐ Addition ☒ Alteration

Documentation Author's Declaration Statement

I certify that this Certificate of Compliance documentation is accurate and complete.

Name: Chris Richards — Signature: Chris Richards

Company: WINZLER & KELLY — Date: 5/24/2011

Address: 2235 Mercury Way Ste. 150 — CEA # — CEPE #

City/State/Zip: Santa Rosa, CA 95407 — Phone: (707) 523-1010

Principal Lighting Designer's Declaration Statement

- I am eligible under Division 3 of the California Business and Professional Code to accept responsibility for the lighting design.
- This Certificate of Compliance identifies the lighting features and performance specifications required for compliance with Title 24, Pages 1 and 6 of the California Code of Regulations.
- The design features represented on this Certificate of Compliance are consistent with the information provided to document this design on the other applicable compliance forms, worksheets, calculations, plans and specifications submitted to the enforcement agency for approval with this building permit application.

Name: Chris Richards — Signature: Chris Richards

Company: Winzler and Kelly — Phone: (707) 523-1010

Address: 2235 Mercury Way, Ste 150 — License #

City/State/Zip: Santa Rosa, CA 95407 — Date

Principal Lighting Designer's Declaration

☒ I certify that this Certificate of Compliance documentation is accurate and complete, and accounts for all outdoor lighting power, including building mounted, pole mounted, as well as all other lighting designed for the site, and that Additional Lighting Power Allowances for Specific Applications or Additional Lighting Power Allowances for Ordinance Requirements have not been counted more than one time for the same area, in accordance with Section 147 of the Standards.

Outdoor Lighting Mandatory Measures
Indicate location on building plans of Mandatory Measures Note Block: ____________

LIGHTING COMPLIANCE FORMS & WORKSHEETS (check box if worksheets is included)

For detailed instructions on the use of this and all Energy Efficiency Standards compliance forms, please refer to the Nonresidential Manual published by the California Energy Commission.

☒	OLTG-1C	Certificate of Compliance. All 4 pages required on plans for all submittals.
☒	OLTG-2C	(Pages 1 of 3) Lighting Wattage Allowances for General Hardscape, Sales Frontage, or Ornamental Lighting. Optional on plans.
☐	OLTG-2C	(Pages 2 of 3) Lighting Wattage Allowance for Per Application or Per Area. Optional on plans.
☐	OLTG-2C	(Pages 3 of 3) Additional Lighting Power Allowance for Ordinance Requirements. Optional on plans.

EnergyPro 5.1 by EnergySoft User Number: 4188 RunCode: 2011-05-24T17:13:11 ID: 0224310002 Page 9 of 13

CERTIFICATE OF COMPLIANCE (Part 2 of 4) OLTG-1C

Project Name: Service Center Relocation — Date: 5/24/2011

COMPLIANCE FIXTURE / LIGHTING CONTROL SCHEDULE and FIELD INSPECTION CHECKLIST

INSTALLATION CERTIFICATE, OLTG-1INST (Retain a copy and verify form is completed and signed.) — Field Inspection ☐

CERTIFICATE OF ACCEPTANCE, OLTG-2A (Retain a copy and verify form is completed and signed.) — Field Inspection ☐

A	B	C	D	E	F		G	H	I	
Name or Item Tag	Luminaire Schedule: Luminaire Description[1] See footnote below (i.e.: 1 lamp pole-top shoe-box 400 watt metal halide)	Cutoff Designation	Watts per Luminaire	Special Features	How wattage was determined: Default from NA8	According to §130 (D or E)	Number of Luminaires	Installed Watts (D X G)	Field Inspector[2] Pass	Fail
G	70w Metal Halide		86.0	☐	☒	☐	18	1,548	☐	☐
W	250w Metal Halide Mag		295.0	☐	☒	☐	2	590	☐	☐

Enter total into OLTG-1C; Page 4 of 4; Row H; Total Installed Watts: 2,138

1. Type of luminaire (i.e.: post top, wall pack, surface, shoe box); for non-incandescent luminaires, indicate nominal lamp wattage and lamp type (i.e.: fluorescent, incandescent, HID); ballast type (i.e.: electronic or magnetic); number of lamps and number of ballasts per luminaire. For incandescent luminaires, the luminaire wattage listed in column D shall be the maximum relamping rated wattage on a permanent factory-installed label on the luminaire, NOT the wattage of the lamp (bulb) used, in accordance with Section 130(d or e).
2. If Fail then describe on Page 2 of the Inspection Checklist Form and take appropriate action to correct. Verify building plans if necessary.

EXEMPT LUMINAIRES — Field Inspection ☐

Name or Symbol	Description of exempt luminaires in accordance with §147

MANDATORY CONTROLS — Field Inspection ☐

#	Description	Location	#	Description	Location

SPECIAL FEATURES INSPECTION CHECKLIST (See Page 2 of 4 of OLTG-1C)

The local enforcement agency should pay special attention to the items specified in this checklist. These items require special written justification and documentation, and special verification. The local enforcement agency determines the adequacy of the justification, and may reject a building or design that otherwise complies based on the adequacy of the special justification and documentation submitted.

Filed Inspector Notes or Discrepancies:

EnergyPro 5.1 by EnergySoft User Number: 4188 RunCode: 2011-05-24T17:13:11 ID: 0224310002 Page 10 of 13

CERTIFICATE OF COMPLIANCE (Part 3 of 4) OLTG-1C

Project Name: Service Center Relocation — Date: 5/24/2011

A. OUTDOOR LIGHTING ZONE

OUTDOOR LIGHTING ZONE: ☐ OLZ 1 ☐ OLZ 2 ☒ OLZ 3 ☐ OLZ 4

Is the Outdoor Lighting Zone: ☒ Default in accordance with §10-114, or ☐ Amended by JHA

Complete the information below if the default Outdoor Lighting Zone has been amended by the local jurisdiction having authority (JHA):

- ☐ The site is a government designated park, recreational area, wildlife preserve, or portion thereof, and has been designated as LZ2 or LZ3, in accordance with Table 10-114-A, because the site is contained within such a zone.
- ☐ The local jurisdiction having authority has officially adopted a change to the State Default Lighting Zone and has notified the Energy Commission by providing the materials required in §10-114(d) to the Executive Director.
- ☐ The adopted change is posted on the Energy Commission website.

B. ADDITIONAL LIGHTING POWER ALLOWANCE FOR ORDINANCE REQUIREMENTS

Are additional lighting power allowances for ordinance in Table 147-C used? ☐ Yes ☒ No

Complete the information below if additional lighting power allowances for ordinance requirements are used:

- ☐ The local jurisdiction having authority has officially adopted specific outdoor light levels, which are expressed as average or minimum footcandle levels, by following a public process that allowed for formal public notification, review, and comment about the proposed change.
- ☐ The local jurisdiction having authority which adopted specific outdoor light levels and has notified the Commission by providing the following materials required §10-114(f) to the Executive Director.

C. ACCEPTANCE FORMS

Required Acceptance Tests

Designer:
This form is to be used by the designer and attached to the plans. Listed below is the acceptance test for the Lighting system, **OLTG-2A**. The designer is required to check the acceptance tests and list all control devices serving the building or space shall be certified as meeting the Acceptance Requirements for Code Compliance. If all the lighting system or control of a certain type requires a test, list the different lighting and the number of systems. The NA7 Section in the Appendix of the Nonresidential Reference Appendices Manual describes the test. Since this form will be part of the plans, completion of this section will allow the responsible party to budget for the scope of work appropriately. **Forms can be grouped by type of Luminaire controlled.**

Enforcement Agency:
Systems Acceptance. Before Occupancy Permit is granted for a newly constructed building or space or when ever new lighting system with controls is installed in the building or space shall be certified as meeting the Acceptance Requirements.
The **OLTG-2A** form is not considered a complete form and is not to be accepted by the enforcement agency unless the boxes are checked and/or filled and signed. In addition, a Certificate of Acceptance forms shall be submitted to the enforcement agency that certifies plans, specifications, installation certificates, and operating and maintenance information meet the requirements of §10-103(b) of Title 24 Part 6. The field inspector must receive the properly filled out and signed forms before the building can receive final occupancy. A copy of the **OLTG-2A** for each different lighting luminaire control(s) must be provided to the owner of the building for their records.

	Luminaires Controlled			Certificate of Acceptance OLTG-2A[1]
Equipment Requiring Testing	Description	Qty. of Like Controls	Location	Outdoor Lighting Acceptance Tests

1. Insert: **OMS** for Outdoor Motion Sensor; **OLSC** for Outdoor Lighting Shutoff Controls; **OP** for Outdoor Photocontrol; **ATS** for Astronomical Time Switch; and, **STS** for Standard (non-astronomical) Time Switch acceptance.

EnergyPro 5.1 by EnergySoft User Number: 4188 RunCode: 2011-05-24T17:13:11 ID: 0224310002 Page 11 of 13

REGISTERED PROFESSIONAL ENGINEER — CHRISTOPHER A. RICHARDS — No. E17660 — Exp. 9/30/11 — ELECTRICAL — STATE OF CALIFORNIA

WINZLER & KELLY

NO.	DATE	REVISION	BY

SONOMA COUNTY WATER AGENCY

SCALE: NONE — DATE: 5/25/2011 — DRAWN: SMG — REVIEWED:

SERVICE CENTER RELOCATION (2025 AVIATION BOULEVARD)

TITLE 24 DOCUMENTATION-1

02243-10-002

FILE NAME: 7449_E-701.dwg — CONTRACT NUMBER: 0-706-7 #01 — DRAWING NUMBER: E-701 — SHEET 53 OF 64

REUSE OF DOCUMENTS; This document and the ideas and designs incorporated herein, as an instrument of professional service, is the property of Winzler & Kelly and shall not be reused in whole or in part for any other project without Winzler & Kelly's written authorization. © 2010 Winzler & Kelly

CERTIFICATE OF COMPLIANCE (Part 4 of 4) OLTG-1C

Project Name: *Service Center Relocation* | Date: *5/24/2011*

ALLOWED AND INSTALLED OUTDOOR LIGHTING POWER

		Lighting Wattage Power Allowance
A	Lighting power allowance for general hardscape (from OLTG-2C Page 1 of 3)	2,896
B	Specific application lighting wattage allowance per unit length (from OLTG-2C Page 1 of 3)	0
C	Specific application lighting wattage allowance for ornamental lighting (from OLTG-2C Page 1 of 3)	0
D	Specific application lighting wattage allowance per application (from OLTG-2C Page 2 of 3)	0
E	Specific application lighting wattage allowance per area (from OLTG-2C Page 2 of 3)	0
F	Specific application lighting wattage allowance for ordinance requirements (from OLTG-2C Page 3 of 3)	0
G	Total Allowed Wattage = Sum of rows A through F:	2,896
H	Total installed watts (from Compliance Fixture Schedule, (from OLTG-2C Page 1 of 3)	2,136

Complies if wattage in row H is less than or equal to the wattages in row G ☒ Yes ☐ No

EnergyPro 3.1 by EnergySoft User Number: 4188 **RunCode: 2011-05-24T17:13:11** ID: 0224310802 Page 12 of 13

OUTDOOR LIGHTING WORKSHEET (Part 1 of 3) OLTG-2C

Project Name: *Service Center Relocation* | Date: *5/24/2011*

A. LIGHTING POWER ALLOWANCE FOR GENERAL HARDSCAPE

AREA WATTAGE ALLOWANCE (AWA)			LINEAR WATTAGE ALLOWANCE (LWA)			INITIAL WATTAGE ALLOWANCE	TOTAL GENERAL HARDSCAPE LIGHTING ALLOWANCE
A	B	C	D	E	F	G	H
Illuminated Hardscape Area	AWA Per Square Foot	AWA (A X B)	Perimeter Length of General Hardscape	LWA Per Linear Foot	LWA (D X E)	IWA (Watts)	C + F + G
18,871	0.092	1,736	0	0.920	0	779	2,596
						Enter total into OLTG-1C: Page 4 of 4: Row A: Lighting Power Allowance for General Hardscape	2,596

☒ Yes AWA, LWA, and IWA from Table 147-A was used as appropriate for the Outdoor Lighting Zone

B. SPECIFIC APPLICATION LIGHTING WATTAGE ALLOWANCE PER UNIT LENGTH (Available only for sales frontage)

DETERMINE WATTAGE ALLOWANCE				LUMINAIRE TYPE		DESIGN WATTS			
A	B	C	D	E	F	G	H	I	J
Specific Lighting Application	Linear Feet of Frontage	Sales Frontage Allowance for OLZ (Watts per LF)	Wattage Allowance (B X C)	Name or Symbol	Luminaire Type	Lumin QTY	Watts Per Luminaire	Design Watts (G X H)	Allowed Watts Minimum of D or I
						Enter total into OLTG-1C: Page 4 of 4: Row B: Specific Application Lighting Wattage Allowance Per Unit Length			0

C. SPECIFIC APPLICATION WATTAGE ALLOWANCE FOR ORNAMENTAL LIGHTING

DETERMINE WATTAGE ALLOWANCE				LUMINAIRE TYPE		DESIGN WATTS			
A	B	C	D	E	F	G	H	I	J
Specific Lighting Application	Square feet of Hardscape	Ornamental Lighting Allowance for OLZ (Watts per ft²)	Wattage Allowance (B X C)	Name or Symbol	Luminaire Type	Lumin QTY	Watts Per Luminaire	Design Watts (G X H)	Allowed Watts Minimum of D or I
						Enter total into OLTG-1C: Page 4 of 4: Row C: Specific Application Wattage for Ornamental Lighting			0

EnergyPro 5.1 by EnergySoft User Number: 4188 **RunCode: 2011-05-24T17:13:11** ID: 0224310802 Page 13 of 53

REGISTERED PROFESSIONAL ENGINEER CHRISTOPHER A. KELLY No. E17660 Exp. 9/30/11 ELECTRICAL STATE OF CALIFORNIA

WINZLER & KELLY

NO.	DATE	REVISION	BY

SONOMA COUNTY WATER AGENCY

SCALE: NONE | DATE: 5/25/2011

DRAWN: SMG

REVIEWED:

SERVICE CENTER RELOCATION (2025 AVIATION BOULEVARD)

TITLE 24 DOCUMENTATION-2

02243-10-002

FILE NAME: 7449_E-702.dwg

CONTRACT NUMBER: 0-706-7 #01

DRAWING NUMBER: E-702

SHEET 54 OF 64

J:\02243 - SCWA\02243-10-002 SCWA Airport Service Center\CAD 02243-10-002\dwg\7449_E-702.dwg 05-06-11 01:14:47PM sgirard

REUSE OF DOCUMENTS; This document and the ideas and designs incorporated herein, as an instrument of professional service, is the property of Winzler & Kelly and shall not be reused in whole or in part for any other project without Winzler & Kelly's written authorization. © 2010 Winzler & Kelly

MECHANICAL LEGEND

AFF	ABOVE FINISHED FLOOR
COP	COEFFICIENT OF PERFORMANCE
CD	CONDENSATE DRAIN
CFM	CUBIC FEET PER MINUTE
DIA	DIAMETER
EER	ENERGY EFFICIENCY RATIO
EF	EXHAUST FAN
ESP	EXTERNAL STATIC PRESSURE
F	FILTER
FSD	FIRE SMOKE DAMPER
GA	GAUGE
GA	GALVANIZED
HP	HEAT PUMP
HP	HORSEPOWER
LBS	POUNDS
LRA	LOCKED ROTOR AMPS
LDS	LOW DYNAMIC STIFFNESS
MBH	THOUSAND BTU'S PER HOUR
MCA	MINIMUM CIRCUIT AMPS
MOCP	MAXIMUM OVERCURRENT PROTECTION
NC	NOISE CRITERIA
OSA	OUTSIDE AIR
P	PUMP
PD	PRESSURE DROP (FEET OF WATER)
RLA	RATED LOAD AMPS
REQD	REQUIRED
RW	RECYCLED WATER (SUPPLY)
RWR	RECYCLED WATER RETURN
TDH	TOTAL DYNAMIC HEAD
TYP	TYPICAL
UCD	UNDERCUT DOOR
20X20	RECTANGULAR DUCT DESIGN
12"	ROUND DUCT DESIGNATION
(E)	EXISTING
(N)	NEW
SM	DUCT SMOKE DETECTOR LOCATION
T3	THERMOSTAT/SENSOR (UNIT NOTED)
	SD SUPPLY DIFFUSER
	RD RETURN DIFFUSER
	VD VOLUME DAMPER
BD	BD BACKDRAFT DAMPER
	BALANCING VALVE, CALIBRATED
	BALL VALVE
	CHECK, SWING GATE
	FLEXIBLE PIPE CONNECTION
	GATE OR GLOBE VALVE
AV	AUTOMATIC AIR VENT
PT	P/T PORT
	STRAINER
	TWO WAY VALVE

WATER TO AIR HEAT PUMP SCHEDULE

TAG	NOMINAL TONS	CFM	OSA	MAX ESP	ELECTRICAL				COMPRESSOR		WATER FLOW			COOLING LOAD (MBH)		HEATING LOAD (MBH)	EER	COP	WEIGHT	LOCATION	NOTES
					VOLTAGE	TOTAL FLA	MCA	MOCP	RLA	LRA	GPM	WATER CONN.	PD (FT.)	SENSIBLE	TOTAL						
HP 1	4	1500	209	0.75	208-230/60/3	18.4	21.0	30	13.6	83.1	9	1"	5.1	38.2	41.1	29.5	20.6	4.49	438	(N) FLEET CTR NORTH	②③④⑤
HP 2	4	1500	174	0.75	208-230/60/3	18.4	21.0	30	13.6	83.1	9	1"	5.1	39.8	41.3	27.4	20.6	4.49	438	(N) FLEET CTR SOUTH	②③④⑤
HP 3	5	2000	393	0.75	208-230/60/3	25.4	29.0	45	17.6	123	12	1"	8.3	62.6	67.0	15.3	18.5	4.35	483	(N) FLEET CTR SHOP	①②③④⑤
HP 4	5	1995	275	0.75	208-230/60/3	23.7	26.9	40	15.9	110	12	1"	8.7	64.6	68.6	58.5	20.0	4.21	473	(E) SERVICE CTR RMS 105-107	②③④⑤
HP 5	5	2000	235	0.75	208-230/60/3	25.4	29.0	45	17.6	123	12	1"	8.3	62.6	67.7	41.1	18.5	4.35	483	(E) SERVICE CTR RMS 101A-101E	①③④⑤
HP 6	5	2000	235	0.75	208-230/60/3	25.4	29.0	45	17.6	123	12	1"	8.3	62.6	67.7	41.1	18.5	4.35	483	(E) SERVICE CTR RMS 101A-101E	①③④⑤

NOTES:
① DUAL CAPACITY UNIT
② PROVIDE DRAIN PAN UNDER UNIT. PROVIDE CONDENSATE DRAIN AND SECONDARY OVER FLOW DRAIN AS REQUIRED.
③ RATED IN ACCORDANCE WITH ARI/ISO STANDARD 13256-1.
④ COP BASED ON 50° EWT; EER BASED ON 70° EWT.
⑤ PROVIDE LOW-VOLTAGE THERMOSTAT & WIRING TO UNIT, FILTER RACK AND FILTERS, MERV 11 MINIMUM PER CALGREEN (A5.504.5.3.1).

FAN COIL SCHEDULE

TAG	NOMINAL TONS	CFM	OSA	MAX ESP	ELECTRICAL				COMPRESSOR		WATER FLOW			COOLING LOAD (MBH)		WEIGHT	LOCATION	NOTES
					VOLTAGE	MOTOR WATTS	MCA	MOCP	RLA	LRA	GPM	WATER CONN.	PD (FT.)	SENSIBLE	TOTAL			
FC 1	2.5	921	0	0.0	208-230/60/3	159	4.05	15	13.6	83.1	6	1"	5.1	21.6	25	210	ROOM 132	①②③④

NOTES:
① DUAL SPEED UNIT
② PROVIDE DRAIN PAN UNDER UNIT. PROVIDE CONDENSATE DRAIN AND SECONDARY OVER FLOW DRAIN AS REQUIRED.
③ CAPACITY BASED ON 50°F EWT. (8.5 ΔT)
④ PROVIDE LOW-VOLTAGE THERMOSTAT & WIRING TO UNIT, FILTER RACK AND FILTERS, MERV 11 MINIMUM PER CALGREEN (A5.504.5.3.1).

FIRE/SMOKE DAMPER SCHEDULE

QTY	TAG	SLEEVE	UL RATING	DESCRIPTION
1	FSD-1	18"x18" 16" LONG 20 GAUGE	1.5 HR UL 555, UL555S, CSFM 3225-0368 AND 3230-0368-111	PROVIDE WITH 165°F FUSIBLE LINK AND ELECTRONIC ACTUATOR. INSTALL IN DUCTWORK AS SHOWN. ELECTRONIC ACTUATOR DAMPER MOTOR, 120V/1 PH. SET AT N.O. POSITION. WIRE TO CORRIDOR SMOKE DETECTOR FOR OPERATION.
1	FSD-2	36"x18" 16" LONG 20 GAUGE	1.5 HR UL 555, UL555S, CSFM 3225-0368 AND 3230-0368-111	PROVIDE WITH 165°F FUSIBLE LINK AND ELECTRONIC ACTUATOR. INSTALL IN DUCTWORK AS SHOWN. ELECTRONIC ACTUATOR DAMPER MOTOR, 120V/1 PH. SET AT N.O. POSITION. WIRE TO CORRIDOR SMOKE DETECTOR FOR OPERATION.

EXHAUST FAN SCHEDULE

TAG	QTY.	CFM	ESP	SONES	RPM	ELECTRICAL		WEIGHT (LBS.)	SERVING	LOCATION
						VOLTAGE	BHP			
EF 1	1	–	–	–	–	–	–	–	SERVICE CENTER 106	EXISTING
EF 2	1	–	–	–	–	–	–	–	SERVICE CENTER 107	EXISTING
EF 3	1	–	–	–	–	–	–	–	SERVICE CENTER 105	EXISTING
EF 4	1	200	0.4	1.4	1260	120/60/1	–	17	FLEET CENTER 127 & 128	ABOVE CEILING
EF 5	1	290	0.25	2.0	990	120/60/1	–	18.3	FLEET CENTER ELECTRICAL ROOM	CEILING
EF 6	1	150	0.25	3.5	1023	120/60/1	–	10.0	FLEET CENTER BREAK ROOM	CEILING

LOUVER SCHEDULE

QTY	TAG	SIZE	DESCRIPTION
2	L-1	18"x18"	EXTRUDED ALUMINUM WALL LOUVER, DRAINABLE BLADES, 4"x0.081" THICK FRAME, 4"x0.081" THICK BLADES, 35° SETTING, ½"WIRE MESH SCREEN.

DIFFUSER SCHEDULE

QTY	TAG	MAX CFM	NECK SIZE	MODULE SIZE	NC	PD	FLOW	LOCATION
1	SD-1	250	10ø	10X10	–	–	SUPPLY	ACOUSTICAL CEILING
12	SD-2	500	20X10	18X10	–	–	SUPPLY	SIDEWALL DUCT
7	SD-3	200	8ø	24X24	–	–	SUPPLY	T-BAR CEILING
4	SD-4	250	8ø	24X24	–	–	SUPPLY	T-BAR CEILING
3	SD-5	300	10ø	24X24	–	–	SUPPLY	T-BAR CEILING
1	SD-6	100	8ø	24X24	–	–	SUPPLY	T-BAR CEILING
2	SD-7	75	6ø	24X24	–	–	SUPPLY	T-BAR CEILING
2	RD-1	2000	36X18	–	–	–	RETURN	SIDEWALL
1	RD-2	2000	36X18	–	–	–	RETURN	SIDEWALL
2	RD-3	600-650	12ø	24X24	–	–	RETURN	T-BAR CEILING
2	RD-4	200	8ø	24X24	–	–	RETURN	T-BAR CEILING
2	RD-5	250-300	10ø	24X24	–	–	RETURN	T-BAR CEILING
2	RD-6	700-800	14ø	24X24	–	–	RETURN	T-BAR CEILING
2	EG-1	100	8ø	8X8	–	–	EXHAUST	GYP. BD. CLNG.
2	TG-1	100	8X8	–	–	–	TRANSFER	SIDEWALL

BAR LENGTH ON ORIGINAL DRAWING EQUALS ONE INCH. ADJUST SCALE ACCORDINGLY

meline engineering
P.O. Box 276665
Sacramento, CA 95827
ph: 916.366.3458
fax: 916.366.3958
email: lisa@meline.com

REGISTERED PROFESSIONAL ENGINEER LISA M. MELINE No. M 27929 Exp. 06-30-12 MECHANICAL STATE OF CALIFORNIA

NO.	DATE	REVISION	BY

SONOMA COUNTY WATER AGENCY

SCALE: NONE
DATE: 5/17/2011
DRAWN: HB
REVIEWED:

SERVICE CENTER RELOCATION (2025 AVIATION BOULEVARD)
MECHANICAL
SCHEDULES

ME541_M0.00.dwg
CONTRACT NUMBER: TW# 10/11-054

DRAWING NUMBER: M0.00

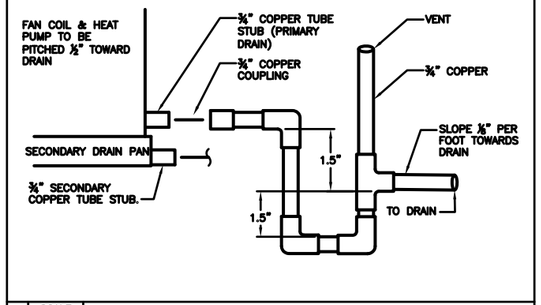

H | SCALE NONE | CONDENSATE DRAIN DETAIL

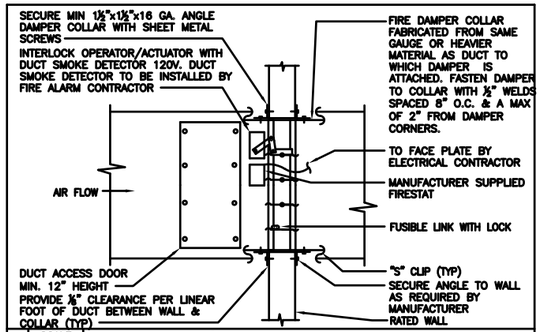

E | SCALE NONE | FIRE/SMOKE DAMPER DETAIL

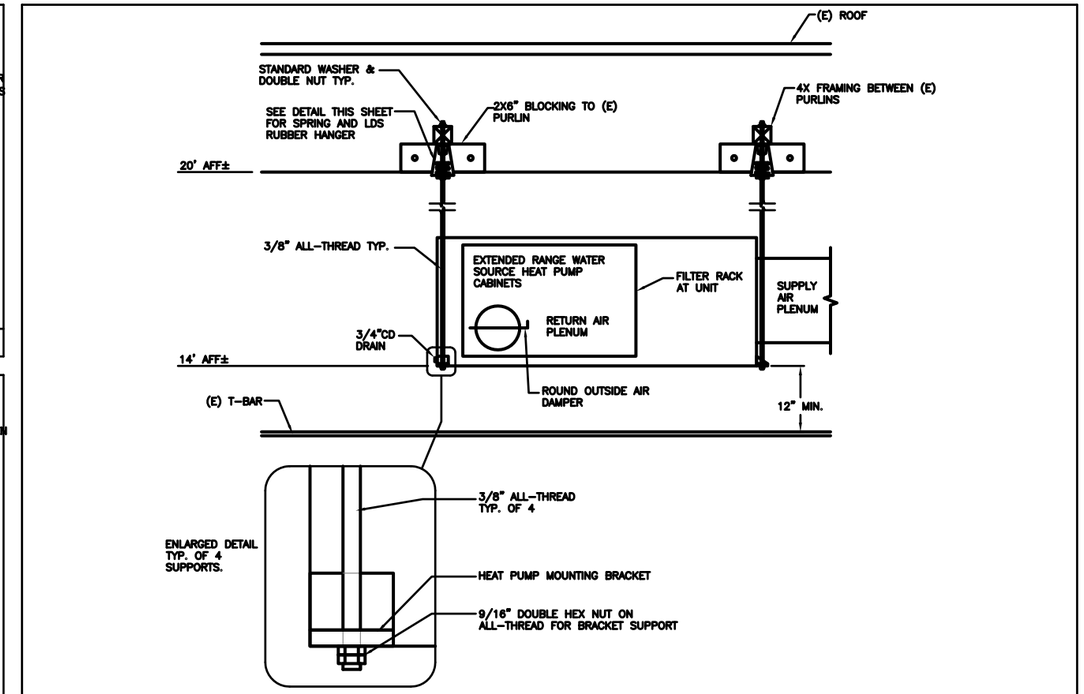

A | SCALE NONE | HORIZONTAL CEILING MOUNTED HEAT PUMP DETAIL

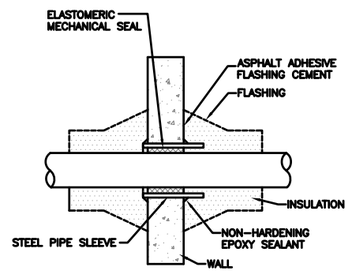

J | SCALE NONE | PIPE THRU RATED WALL DETAIL

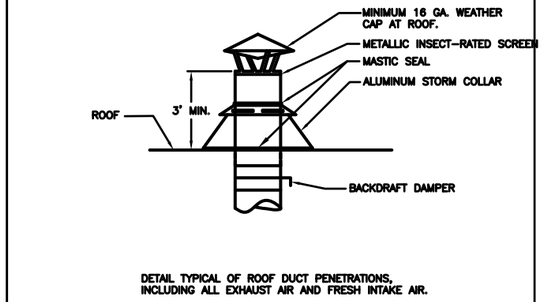

F | SCALE NONE | DUCT THRU ROOF PENETRATION DETAIL

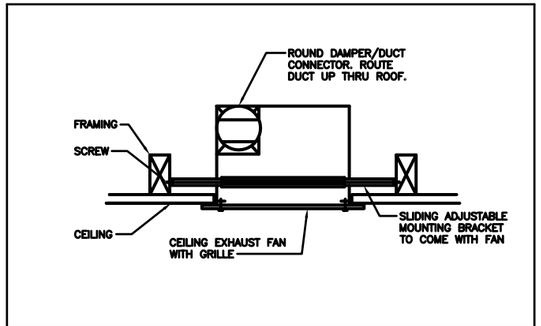

K | SCALE NONE | CEILING EXHAUST FAN DETAIL

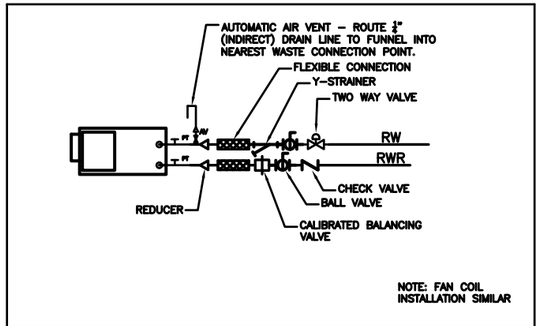

G | SCALE NONE | TYPICAL HEAT PUMP PIPING SCHEMATIC DETAIL

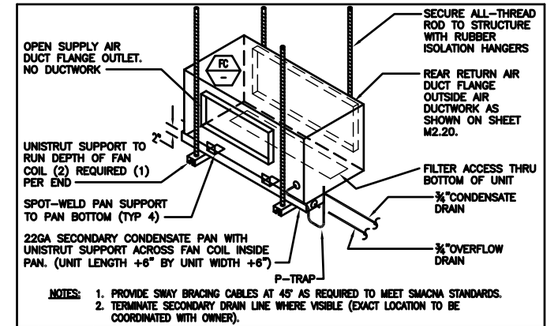

D | SCALE NONE | FAN COIL UNIT INSTALLATION DETAIL

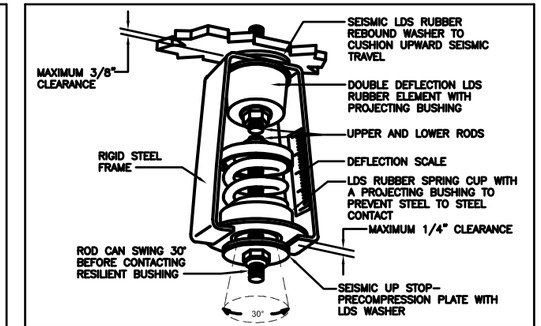

B | SCALE NONE | SPRING & LDS RUBBER ISOLATOR HANGER

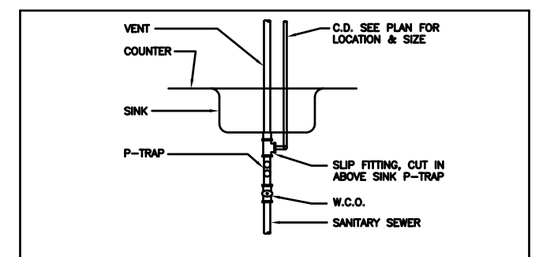

C | SCALE NONE | CONDENSATE DRAIN CONNECTION TO P-TRAP

BAR LENGTH ON ORIGINAL DRAWING EQUALS ONE INCH. ADJUST SCALE ACCORDINGLY

meline engineering
P.O. Box 276665
Sacramento, CA 95827
ph: 916.366.3458
fax: 916.366.3958
email: lisa@meline.com

REGISTERED PROFESSIONAL ENGINEER LISA L. MELINE No. M 27029 MECHANICAL STATE OF CALIFORNIA

NO.	DATE	REVISION	BY

SONOMA COUNTY WATER AGENCY

SCALE: NONE | DATE: 5/27/2011
DRAWN: HB
REVIEWED:

SERVICE CENTER RELOCATION (2025 AVIATION BOULEVARD)

MECHANICAL DETAILS

ME541_M0.10.dwg
CONTRACT NUMBER: TW# 10/11-054

DRAWING NUMBER: M0.10

SHEET NOTES

1. REPLACE (E) DAMPER WITH (N) SPRING-LOADED BUTTERFLY STYLE BACKDRAFT DAMPER.
2. PROVIDE NEW SUPPLY AND RETURN PLENUM AND REQUIRED DUCTWORK TO RECONNECT TO EXISTING DUCTWORK.
3. NEW FILTER RACK AND FILTER, MERV 11 MIN.
4. ROUTE ¾" CONDENSATE DRAIN THRU EXTERIOR WALL AT LOCATION SHOWN. TERMINATE WITH DOWNTURNED ELL. SPILL TO PLANTER BELOW.
5. ROUTE & TIE (N) ¾" CONDENSATE DRAIN TO EXISTING CONDENSATE LINE ABOVE FINISHED CEILING. ROUTE ¾" OVERFLOW TO ABOVE SINK. TERMINATE WITH DOWNTURNED ELL 1" BELOW FINISHED CEILING. SPILL TO SINK BELOW.

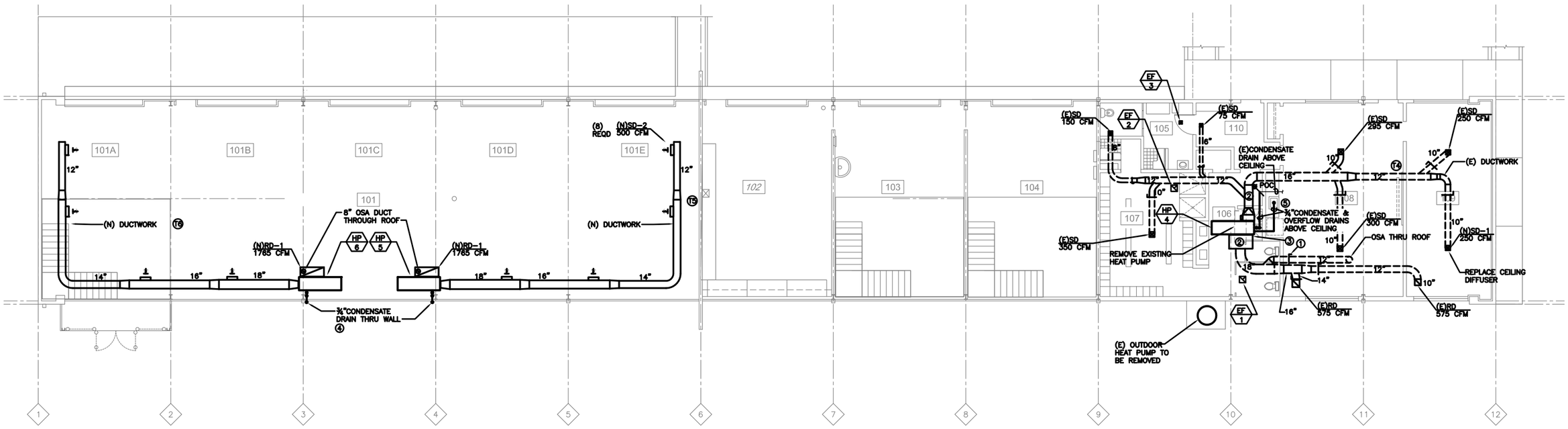

EXISTING SERVICE CENTER MECHANICAL PLAN

BAR LENGTH ON ORIGINAL DRAWING EQUALS ONE INCH. ADJUST SCALE ACCORDINGLY

NORTH

meline engineering
P.O. Box 276665
Sacramento, CA 95827
ph: 916.366.3458
fax: 916.366.3958
email: lisa@meline.com

REGISTERED PROFESSIONAL ENGINEER LISA M. WELTY No. M 27929 Exp. 12-31-11 MECHANICAL STATE OF CALIFORNIA

NO.	DATE	REVISION	BY

SONOMA COUNTY WATER AGENCY

SCALE : 1/8"=1'-0"
DATE : 5/27/2011
DRAWN : HB
REVIEWED :

SERVICE CENTER RELOCATION (2025 AVIATION BOULEVARD)

EXISTING SERVICE CENTER MECHANICAL PLAN

ME541_M2.10.dwg
CONTRACT NUMBER: TW# 10/11-054

DRAWING NUMBER: M2.10

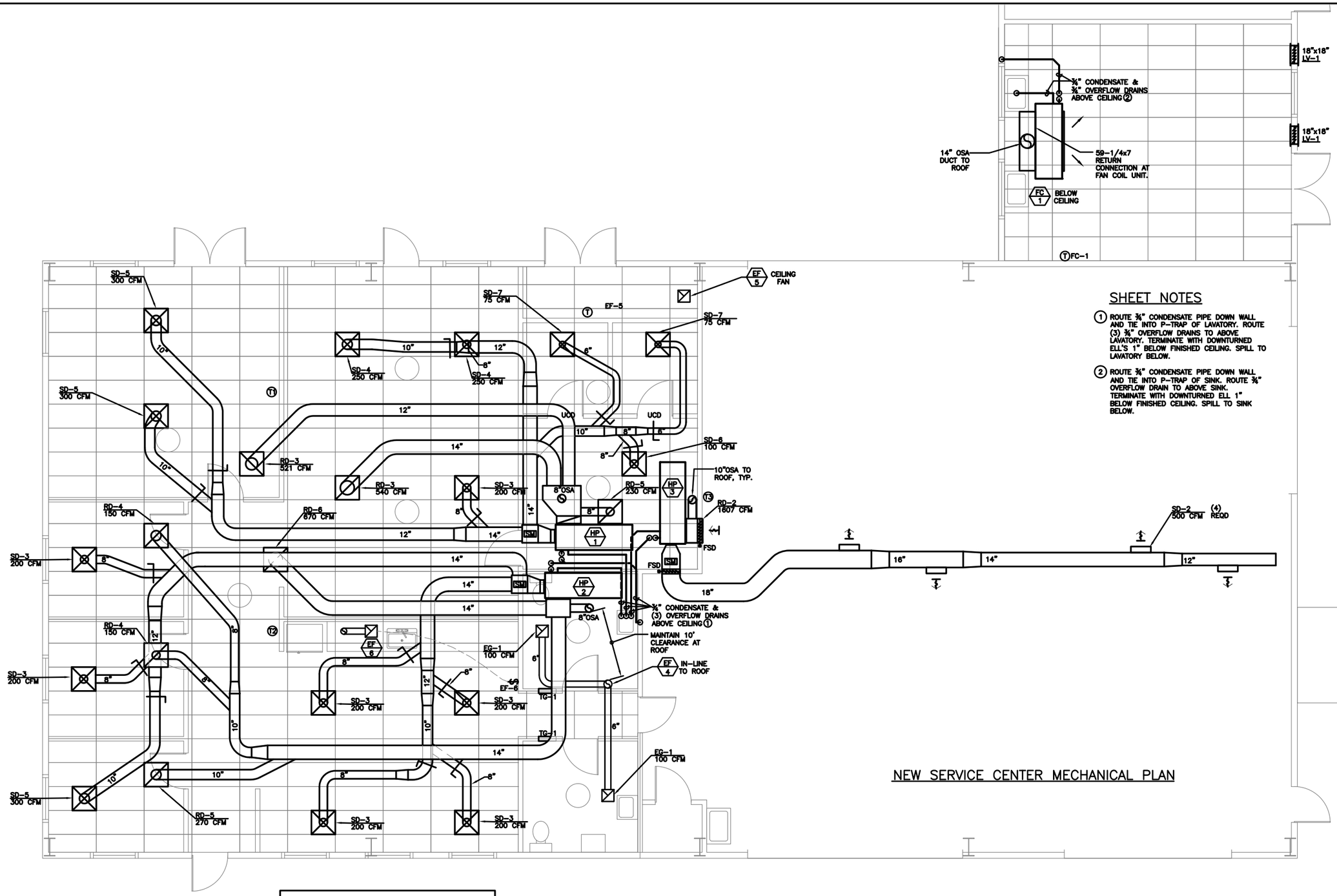

SHEET NOTES

1. ROUTE ¾" CONDENSATE PIPE DOWN WALL AND TIE INTO P-TRAP OF LAVATORY. ROUTE (3) ¾" OVERFLOW DRAINS TO ABOVE LAVATORY. TERMINATE WITH DOWNTURNED ELL'S 1" BELOW FINISHED CEILING. SPILL TO LAVATORY BELOW.
2. ROUTE ¾" CONDENSATE PIPE DOWN WALL AND TIE INTO P-TRAP OF SINK. ROUTE ¾" OVERFLOW DRAIN TO ABOVE SINK. TERMINATE WITH DOWNTURNED ELL 1" BELOW FINISHED CEILING. SPILL TO SINK BELOW.

NEW SERVICE CENTER MECHANICAL PLAN

BAR LENGTH ON ORIGINAL DRAWING EQUALS ONE INCH. ADJUST SCALE ACCORDINGLY

NORTH

meline engineering
P.O. Box 276665
Sacramento, CA 95827
ph: 916.366.3458
fax: 916.366.3958
email: lisa@meline.com

REGISTERED PROFESSIONAL ENGINEER LISA L MELINE No. M 27029 MECHANICAL STATE OF CALIFORNIA

BY	

SONOMA COUNTY WATER AGENCY

SCALE: 1/4"=1'-0"	DATE: 5/27/2011
DRAWN: HB	
REVIEWED:	

SERVICE CENTER RELOCATION (2025 AVIATION BOULEVARD)

NEW SERVICE CENTER MECHANICAL PLAN

ME541_M2.20.dwg
CONTRACT NUMBER: TW# 10/11-054

DRAWING NUMBER: M2.20

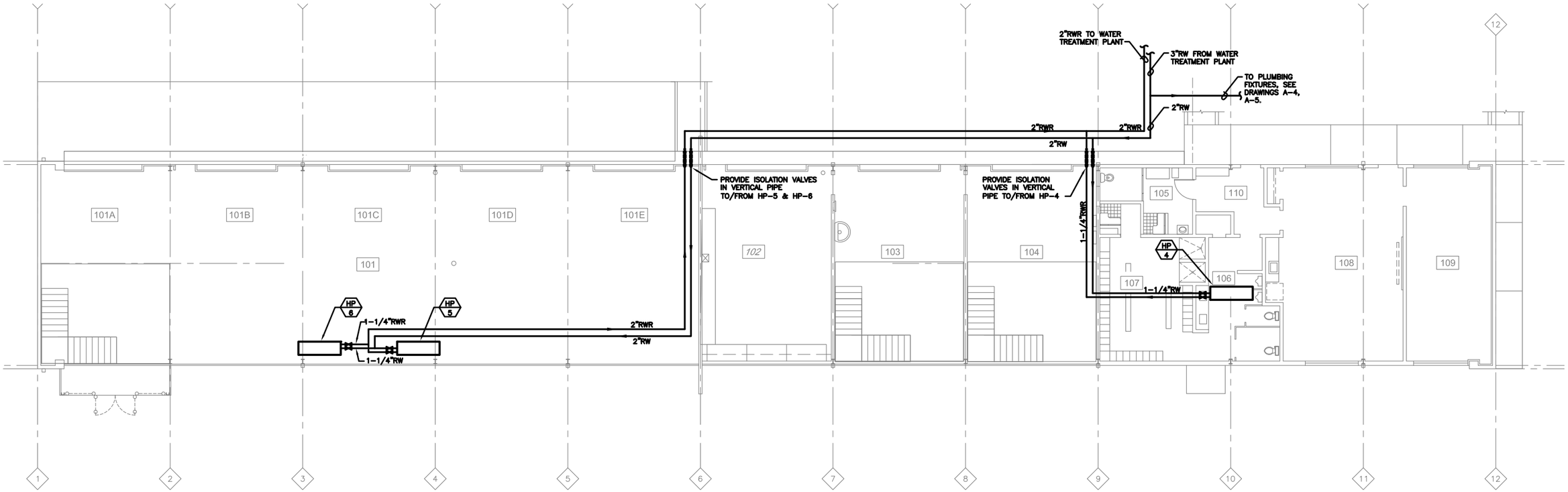

EXISTING SERVICE CENTER PIPING PLAN

BAR LENGTH ON ORIGINAL DRAWING EQUALS ONE INCH. ADJUST SCALE ACCORDINGLY

NORTH

meline engineering
P.O. Box 276665
Sacramento, CA 95827
ph: 916.366.3458
fax: 916.366.3958
email: lisa@meline.com

REGISTERED PROFESSIONAL ENGINEER LISA M. MELINE No. M 27029 Exp. 6-30-12 MECHANICAL STATE OF CALIFORNIA

NO.	DATE	REVISION	BY

SONOMA COUNTY WATER AGENCY

SCALE: 1/8"=1'-0"
DATE: 5/27/2011
DRAWN: HB
REVIEWED:

SERVICE CENTER RELOCATION (2025 AVIATION BOULEVARD)

EXISTING SERVICE CENTER PIPING PLAN

ME541_M4.10.dwg
CONTRACT NUMBER: TW# 10/11-054

DRAWING NUMBER: M4.10

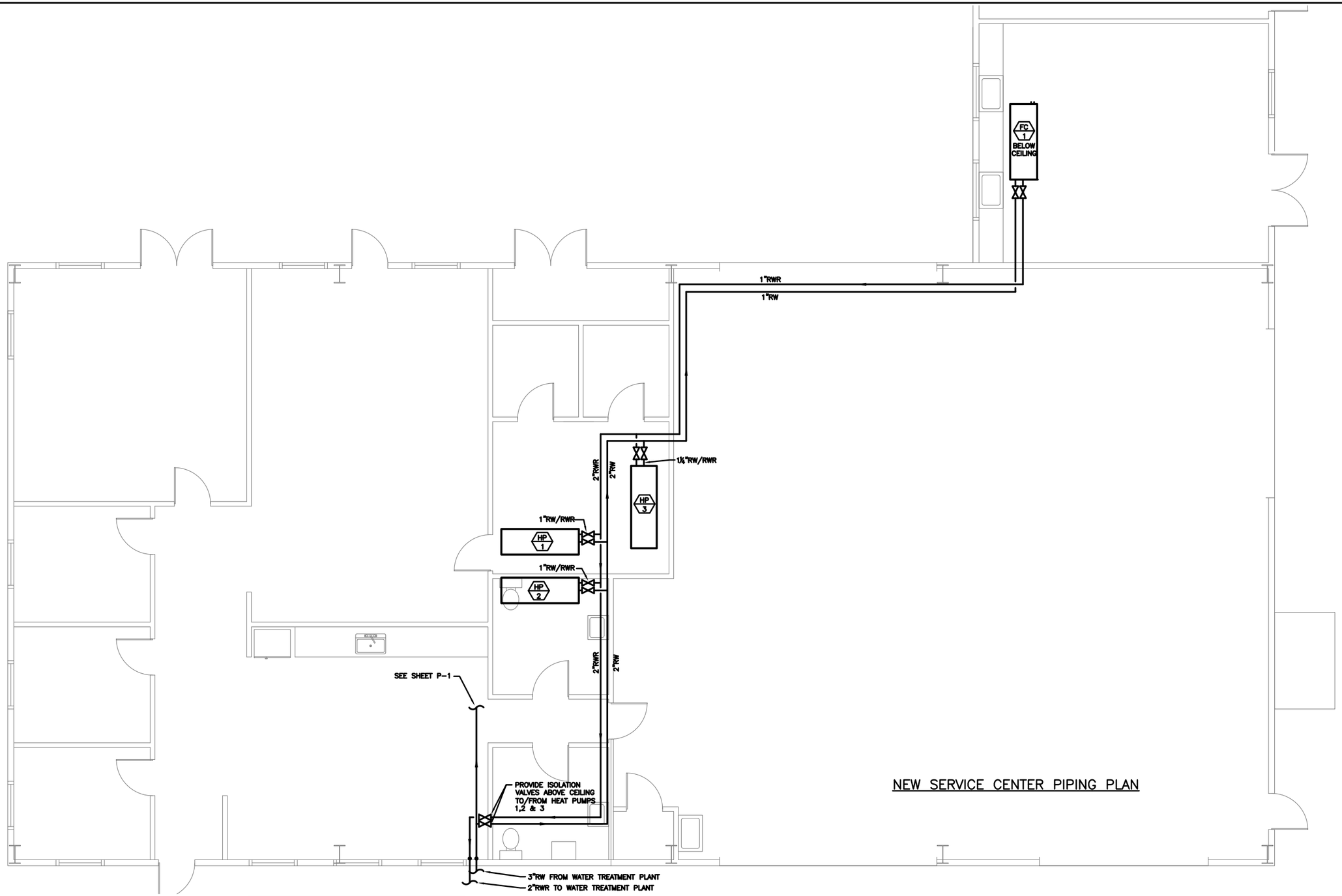

NEW SERVICE CENTER PIPING PLAN

BAR LENGTH ON ORIGINAL DRAWING EQUALS ONE INCH. ADJUST SCALE ACCORDINGLY

NORTH

meline engineering
P.O. Box 276665
Sacramento, CA 95827
ph: 916.366.3458
fax: 916.366.3958
email: lisa@meline.com

REGISTERED PROFESSIONAL ENGINEER LISA L MELINE No. M 27029 MECHANICAL STATE OF CALIFORNIA

NO.	DATE	REVISION	BY

SONOMA COUNTY WATER AGENCY

SCALE: 1/4"=1'-0"
DATE: 5/27/2011
DRAWN: HB
REVIEWED:

SERVICE CENTER RELOCATION (2025 AVIATION BOULEVARD)

NEW SERVICE CENTER
PIPING PLAN

ME541_M4.20.dwg
CONTRACT NUMBER: TW# 10/11-054

DRAWING NUMBER: M4.20

CERTIFICATE OF COMPLIANCE AND FIELD INSPECTION ENERGY CHECKLIST (Part 1 of 4) ENV-1C

Sonoma County Water Service Center (Existing) — 2025 Aviation Blvd Santa Rosa

FIELD INSPECTION ENERGY CHECKLIST

CERTIFICATE OF COMPLIANCE AND FIELD INSPECTION ENERGY CHECKLIST (Part 1 of 4) ENV-1C

CERTIFICATE OF COMPLIANCE AND FIELD INSPECTION ENERGY CHECKLIST (Part 1 of 4) ENV-1C

CERTIFICATE OF COMPLIANCE AND FIELD INSPECTION ENERGY CHECKLIST (Part 1 of 4) ENV-1C

CERTIFICATE OF COMPLIANCE AND FIELD INSPECTION ENERGY CHECKLIST (Part 1 of 4) ENV-1C

CERTIFICATE OF COMPLIANCE AND FIELD INSPECTION ENERGY CHECKLIST (Part 2 of 4) ENV-1C

ROOFING PRODUCT (COOL ROOFS)

CERTIFICATE OF COMPLIANCE AND FIELD INSPECTION ENERGY CHECKLIST (Part 3 of 4) ENV-1C

CERTIFICATE OF COMPLIANCE AND FIELD INSPECTION ENERGY CHECKLIST (Part 4 of 4) ENV-1C

Documentation Author's Declaration Statement

The Principal Envelope Designer's Declaration Statement

BAR LENGTH ON ORIGINAL DRAWING EQUALS ONE INCH. ADJUST SCALE ACCORDINGLY

meline engineering
P.O. Box 276665
Sacramento, CA 95827
ph: 916.366.3458
fax: 916.366.3958
email: lisa@meline.com

NO.	DATE	REVISION	BY

SONOMA COUNTY WATER AGENCY

SCALE: NONE | DATE: 5/27/2011 | DRAWN: HB | REVIEWED:

SERVICE CENTER RELOCATION (2025 AVIATION BOULEVARD)

TITLE 24 DOCUMENTATION

EXISTING BLDG - SHEET 1

ME541_T-24-1.dwg

CONTRACT NUMBER: ####

DRAWING NUMBER: T24.10

ENVELOPE MANDATORY MEASURES: NONRESIDENTIAL — ENV-MM

Sonoma County Water Service Center (Existing) — 5/27/2011

CERTIFICATE OF COMPLIANCE and FIELD INSPECTION ENERGY CHECKLIST (Part 1 of 5) — MECH-1C

Sonoma County Water Service Center (Existing) — 5/27/2011

HVAC SYSTEM DETAILS

CERTIFICATE OF COMPLIANCE and FIELD INSPECTION ENERGY CHECKLIST (Part 1 of 5) — MECH-1C

Sonoma County Water Service Center (Existing) — 5/27/2011

HVAC SYSTEM DETAILS

CERTIFICATE OF COMPLIANCE and FIELD INSPECTION ENERGY CHECKLIST (Part 2 of 5) — MECH-1C

Sonoma County Water Service Center (Existing) — 5/27/2011

CERTIFICATE OF COMPLIANCE and FIELD INSPECTION ENERGY CHECKLIST (Part 3 of 5) — MECH-1C

CERTIFICATE OF COMPLIANCE and FIELD INSPECTION ENERGY CHECKLIST (Part 4 of 5) — MECH-1C

CERTIFICATE OF COMPLIANCE (Part 5 of 5) — MECH-1C

Sonoma County Water Service Center (Existing) — 5/27/2011

MECHANICAL MANDATORY MEASURES: NONRESIDENTIAL — MECH-MM

Sonoma County Water Service Center (Existing) — 5/27/2011

BAR LENGTH ON ORIGINAL DRAWING EQUALS ONE INCH. ADJUST SCALE ACCORDINGLY

meline engineering
P.O. Box 276665
Sacramento, CA 95827
ph: 916.366.3458
fax: 916.366.3958
email: lisa@meline.com

NO.	DATE	REVISION	BY

SONOMA COUNTY WATER AGENCY

SCALE: NONE
DATE: 5/27/2011
DRAWN: HB
REVIEWED:

SERVICE CENTER RELOCATION (2025 AVIATION BOULEVARD)

TITLE 24 DOCUMENTATION

EXISTING BLDG - SHEET 2

ME541_T-24-1.dwg

CONTRACT NUMBER: ####

DRAWING NUMBER: T24.20

SHEET 62 OF 64

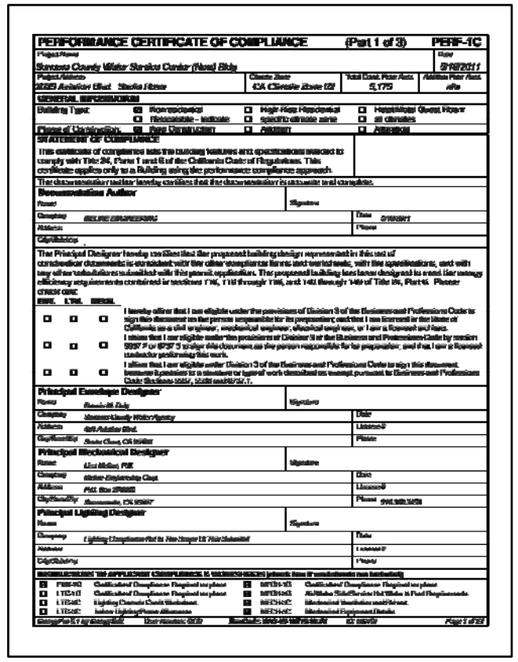

PERFORMANCE CERTIFICATE OF COMPLIANCE (Part 1 of 3) PERF-1C

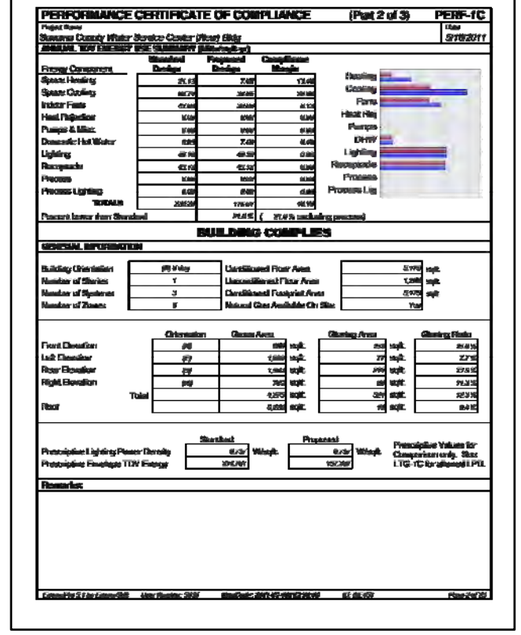

PERFORMANCE CERTIFICATE OF COMPLIANCE (Part 2 of 3) PERF-1C

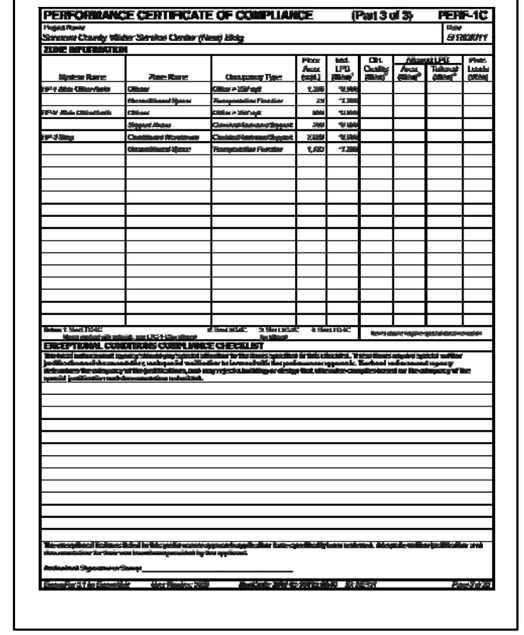

PERFORMANCE CERTIFICATE OF COMPLIANCE (Part 3 of 3) PERF-1C

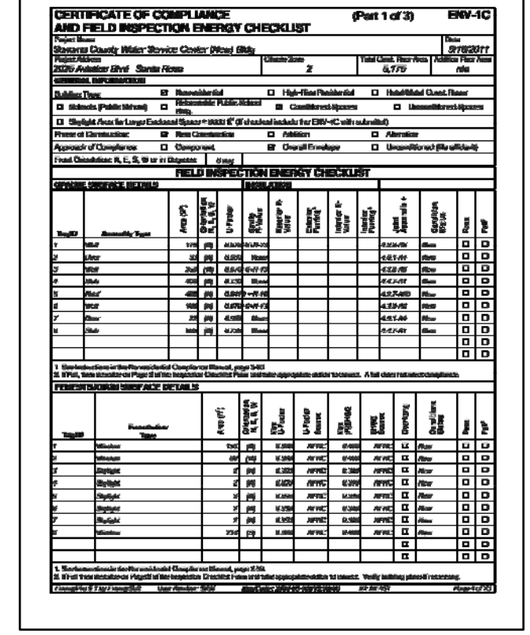

CERTIFICATE OF COMPLIANCE AND FIELD INSPECTION ENERGY CHECKLIST (Part 1 of 3) ENV-1C

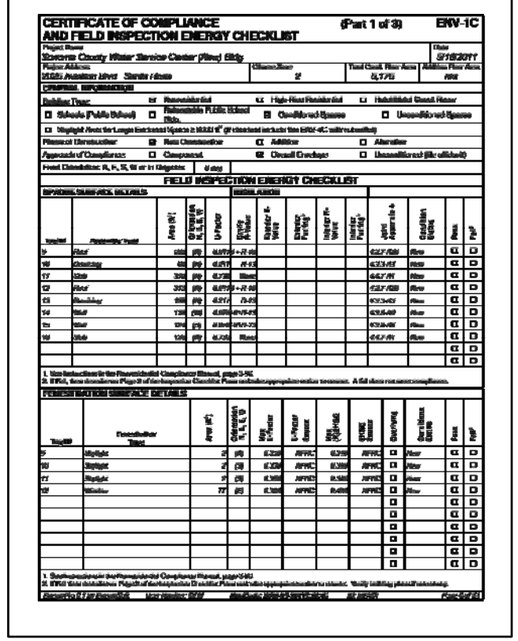

CERTIFICATE OF COMPLIANCE AND FIELD INSPECTION ENERGY CHECKLIST (Part 1 of 3) ENV-1C

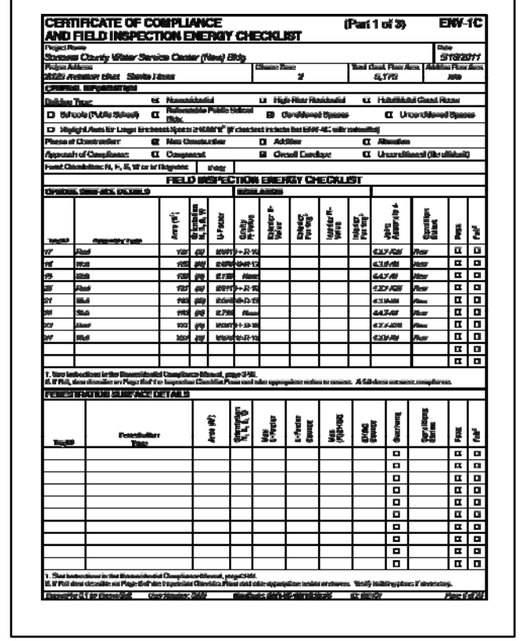

CERTIFICATE OF COMPLIANCE AND FIELD INSPECTION ENERGY CHECKLIST (Part 1 of 3) ENV-1C

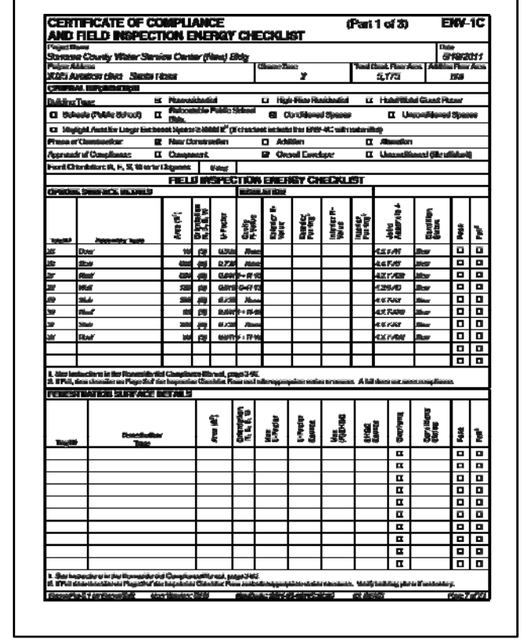

CERTIFICATE OF COMPLIANCE AND FIELD INSPECTION ENERGY CHECKLIST (Part 1 of 3) ENV-1C

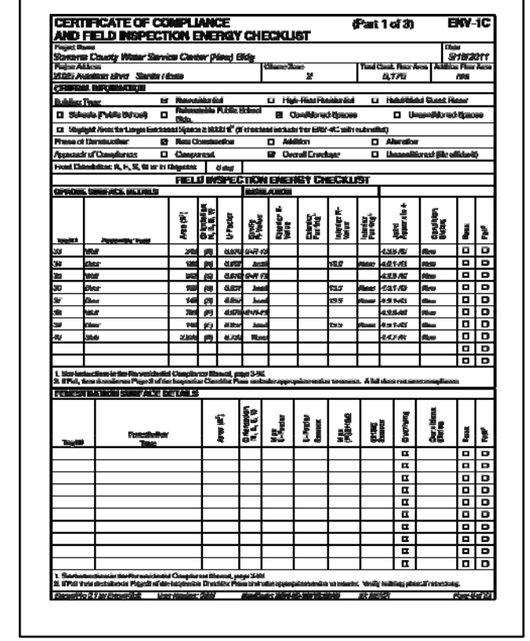

BAR LENGTH ON ORIGINAL DRAWING EQUALS ONE INCH. ADJUST SCALE ACCORDINGLY

meline engineering
P.O. Box 276665
Sacramento, CA 95827
ph: 916.366.3458
fax: 916.366.3958
email: lisa@meline.com

REGISTERED PROFESSIONAL ENGINEER — LISA M. MELINE — No. M 27020 — MECHANICAL — STATE OF CALIFORNIA

NO.	DATE	REVISION	BY

SONOMA COUNTY WATER AGENCY

SCALE: NONE
DATE: 5/27/2011
DRAWN: HB
REVIEWED:

SERVICE CENTER RELOCATION (2025 AVIATION BOULEVARD)

TITLE 24 DOCUMENTATION
NEW BLDG - SHEET 1

ME541_T-24-1.dwg
CONTRACT NUMBER: ####

DRAWING NUMBER: T24.30

CERTIFICATE OF COMPLIANCE AND FIELD INSPECTION ENERGY CHECKLIST (Part 1 of 3) ENV-1C

FIELD INSPECTION ENERGY CHECKLIST

CERTIFICATE OF COMPLIANCE AND FIELD INSPECTION ENERGY CHECKLIST (Part 2 of 3) ENV-1C

CERTIFICATE OF COMPLIANCE AND FIELD INSPECTION ENERGY CHECKLIST (Part 3 of 3) ENV-1C

CERTIFICATE OF COMPLIANCE and FIELD INSPECTION ENERGY CHECKLIST (Part 1 of 4) MECH-1C

CERTIFICATE OF COMPLIANCE and FIELD INSPECTION ENERGY CHECKLIST (Part 1 of 4) MECH-1C

CERTIFICATE OF COMPLIANCE and FIELD INSPECTION ENERGY CHECKLIST (Part 2 of 4) MECH-1C

CERTIFICATE OF COMPLIANCE and FIELD INSPECTION ENERGY CHECKLIST (Part 3 of 4) MECH-1C

CERTIFICATE OF COMPLIANCE and FIELD INSPECTION ENERGY CHECKLIST (Part 4 of 4) MECH-1C

BAR LENGTH ON ORIGINAL DRAWING EQUALS ONE INCH. ADJUST SCALE ACCORDINGLY

meline engineering
P.O. Box 276665
Sacramento, CA 95827
ph: 916.366.3458
fax: 916.366.3958
email: lisa@meline.com

REGISTERED PROFESSIONAL ENGINEER LISA M. MELINE No. M 27920 Exp. 06-30-12 MECHANICAL STATE OF CALIFORNIA

NO.	DATE	REVISION	BY

SONOMA COUNTY WATER AGENCY

SCALE: NONE
DATE: 5/27/2011
DRAWN: HB
REVIEWED:

SERVICE CENTER RELOCATION (2025 AVIATION BOULEVARD)

TITLE 24 DOCUMENTATION

NEW BLDG - SHEET 2

ME541_T-24-1.dwg

CONTRACT NUMBER: ####

DRAWING NUMBER: T24.40