Sonoma County Water Agency

APPROVED MATERIALS LIST INFORMATION

FOR USE WITH THE

DESIGN AND CONSTRUCTION STANDARDS FOR SANITATION FACILITIES

Reprinted: May 2006

May 1996

Sonoma County Water Agency
2150 West College Avenue
Santa Rosa, CA 95401
707/526-5370

APPROVED MATERIALS LIST INFORMATION

For Sonoma County Water Agency
DESIGN AND CONSTRUCTION STANDARDS FOR SANITATION FACILITIES

This document contains copies of manufacturer's catalog cuts for various products appearing on the "Approved Materials List" found in the Sonoma County Water Agency's "Design and Construction Standards for Sanitation Facilities" (Standards).

The Approved Materials List is included in this document and is followed by the catalog cuts (if available) set in the order that they are referenced on the approved list.

At the end of the catalog cuts we have also included a product line card(s), if available, from each of the product suppliers who are:

for most products:	for concrete products:
Cal Steam	Hansen Concrete Products
Groeniger & Company	Jensen Precast
Pace Supply	M.C. Nottingham Co.
Vintage Water Works Supply Inc	Santa Rosa Cast
Westburne Supply	Selvage Concrete Products

The list of suppliers is not meant to be an endorsement nor all inclusive or exclusive; simply the suppliers from which we obtained most of the manufacturer's catalog cuts.

The approved list is based upon the products generally available and in use by local contractors. Other manufacturer's products may be approved upon submission of product information and samples (returnable) for testing purposes. Due to the nature of the typical products proposed for use, we cannot set a time for submission, testing, and possible approval. Therefore, if a product is proposed for use which does not appear on the approved list, it is suggested that the Agency be contacted as soon as possible to arrange for review and/or testing of the product. *It would be poor practice to assume that a product will be approved prior to actual approval.*

SONOMA COUNTY WATER AGENCY

May 1996

D:\RS3\U\DAVEG\APPLIST

Standard Drawing 104

Manhole frame and cover, marked SEWER

D&L Supply	A-1024CPH	For flood areas use
South Bay Foundry	SBF-1900CPH	Gasketed versions

Standard Drawing 105

Cleanout rim and cover, vertical, marked SEWER

Christy	G-5, G-8, G-12
D&L	H8028

Standard Drawing 106

Cleanout rim and cover, sloped, marked SEWER

D&L	H6530 for 6", H6531 for 8"
South Bay Foundry	SBF-1247 for 6", SBF-1249 for 8"

Mechanical gripper plug

Cherne	End-of-pipe plug style
ETCO	"T" cone

Standard Drawing 111

Valve box, marked SEWER

Christy	G-5, G-8

Gate Valve, resilient wedge with smooth bore, 2" through 12"

American Flow Control

Clow

M&H

Mueller

Standard Drawing 117, 118

Precast sand and grease interceptors *(All tanks must be furnished in one piece; for a battery situation use several tanks in series.)*

Jensen Precast

M.C. Nottingham Co., Inc.

Selvage Concrete Products

Standard Drawing 119, 120

Sampling box

Jensen Precast

Santa Rosa Cast #5K

Standard Drawing 121, 124, 127, 129, 131

Couplings for cut-in wye and caulder couplings

Fernco

Indiana Seal

Mission

Tap process

Use "Tap-Tite" process

Strap-on Wye

Cast iron saddle for 10" and larger

Geneco Sealtite E series

Romac CB sewer saddle

Standard Drawing 126

M-G Style coupling

MG Coupling Co.

Standard Drawing 127

Backflow check valve all metal construction

	Jones Stephens Corp.		B01-004 or B01-014
	Zurn		1090, 1091, 1095
Box	Non-traffic areas:	Christy	B-36
	Traffic areas:	Christy	B-17"x 30"

Standard Drawing 130, 132

Private cleanout rim and cover, marked SEWER

For traffic areas:	Christy	G-5, G-8
For non-traffic areas:	Christy	F8
	Geneco	CC4

Cast Transition Couplings 313/315/323/335

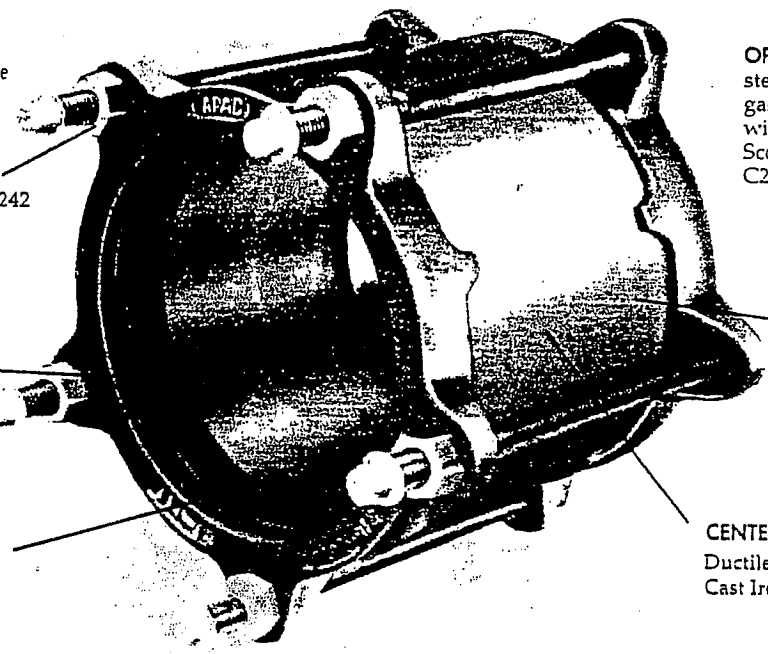

PRESSURE RATING: 175 PSI at ambient atmospheric temperature

BOLTS & NUTS: Corrosion-resistant alloy steel ASTM A242 and AWWA C111

FOLLOWER RING: Ductile iron per ASTM A536 Grade 60-45-15

WEDGE TYPE GASKETS: General purpose rubber with 100% new material: Vee-Pak design provides Duo-Seal gasket sealing

OPTIONS: Type 304 stainless steel bolts & nuts. Buna-N gaskets. Fusion bonded epoxy with 12 mils minimum of 3M Scotchkote 206N AWWA C213-85

FINISH: Sleeve and flange standard APAC rust inhibiting green enamel

CENTER RING: Ductile Iron (AWWA C219) Cast Iron (AWWA C110)

Cast Transition Couplings 313

With Epoxy Coat 323/335

Connects Class 150 & Class 200 rough barrel AC to CI or standard and OD steel pipe (of same nominal size). Simply change a follower ring or gasket to accommodate a wide OD range. For pipe sizes 3" through 12".

Coupling Dimensions

Nom. Size (inch.)	Pipe O.D. Range (inches)		BOLTS			Sleeve Length	Approx. Sh. Wt. (lbs.)
	A	B	No.	Dia. (inch.)	Length D	C	
3	380	388	3	5/8	9-1/2	6	20
3	388	417	3	5/8	9-1/2	6	20
4	4.00	----	4	5/8	9-1/2	6	24
4	4.50	4.81	4	5/8	9-1/2	6	24
4	5.10	5.40	4	5/8	9-1/2	6	24
6	6.00	----	5	5/8	9-1/2	6	31
6	6.63	6.91	5	5/8	9-1/2	6	31
6	7.15	7.46	5	5/8	9-1/2	6	31
8	8.00	----	6	5/8	9-1/2	6	41
8	8.63	9.11	6	5/8	9-1/2	6	41
8	9.30	9.70	6	5/8	9-1/2	6	41
10	10.00	----	7	5/8	9-1/2	6	60
10	10.75	11.10	7	5/8	9-1/2	6	60
10	11.60	12.12	7	5/8	9-1/2	6	60
12	12.00	----	8	5/8	9-1/2	6	73
12	12.75	13.20	8	5/8	9-1/2	6	73
12	13.92	14.40	8	5/8	9-1/2	6	73

Sleeve lengths:
- 3" thru 12"—6"

Overall lengths:
- 3" thru 12"—9-1/2"

Bolts:
- 3" thru 12": 5/8" x 9-1/2"

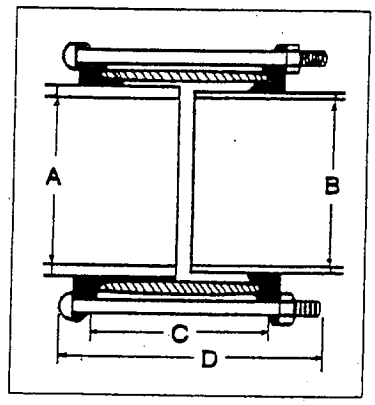

EFFECTIVE 2/1/92 R

Benefits of the PowerSeal Transition Coupling System

Versatile

All of these fittings use interchangeable glands and gaskets to connect Steel, IPS PVC, Cast Iron, Ductile Iron, C900 PVC, and Asbestos/Cement pipe diameters. This versatility allows the stocking distributor or municipality to quickly convert stock items for particular joint requirements.

Inventory Reduction

Since components are interchangeable, a small inventory of couplings and adapters with a few extra glands and gaskets permits field assembly of a wide variety of combinations. For instance, a "stock" coupling purchased for joining Cast Iron to Cast Iron can be easily converted to join Cast Iron to Steel or A/C pipe by changing one gland and gasket.

Pipeline Integrity

These transition fittings allow for pipe misalignment, deflection, and limited axial movement due to expansion and contraction. Their all Ductile Iron construction provides working pressures equal to the rating of the cast iron, asbestos/cement, and other types of pipe used in the waterworks industry.

The Transition Coupling System consists of ...

STRAIGHT COUPLINGS

LONG BARREL COUPLINGS

ENDCAP COUPLINGS

MULTI - COUPLINGS

REDUCING COUPLINGS

FLANGED COUPLING ADAPTERS

MECHANICAL JOINT COUPLING ADAPTERS

Rockwell

Clamp and Coupling products

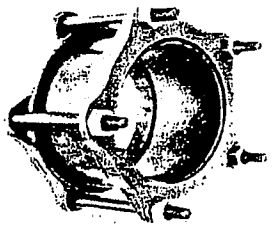

4″ thru 12″

five 441 cast couplings fit all cast iron pipe as shown below

Each Type 441 Cast Coupling fits both old pit cast and new cast iron pipe without changing followers or gaskets.

Rockwell 441 Cast Couplings are

- more economical than mechanical joints.
- corrosion resistant...equal to cast iron pipe.
- space savers...bolts are close to sleeve providing for easy wrapping of polyethylene or other protective materials.
- versatile...fit all classes of cast iron and other types of pipe within specified range of each nominal size.

MATERIAL SPECIFICATIONS

SLEEVE: Gray iron ASTM A126 Class B. Ends have a smooth inside taper for uniform gasket seating.

FOLLOWERS: Malleable iron ASTM A-47 Grade 32510 or ductile iron ASTM A536. Designed for high strength/weight ratio. Follower thickness determined by coupling size.

GASKETS: GRADE 30—standard—specially compounded rubber of all new materials with ingredients to produce superior storage characteristics, permanence and resistance to set after installation. Recommended for water, salt solutions, mild acids and bases. Temperature range −40°F, to 150°F.

BOLTS & NUTS: High strength low alloy steel with heavy, semi-finished hexagon nuts to AWWA C111 (ANSI-A21.11) standards.

FINISH: Blue shopcoat enamel.

Material specifications are subject to change.

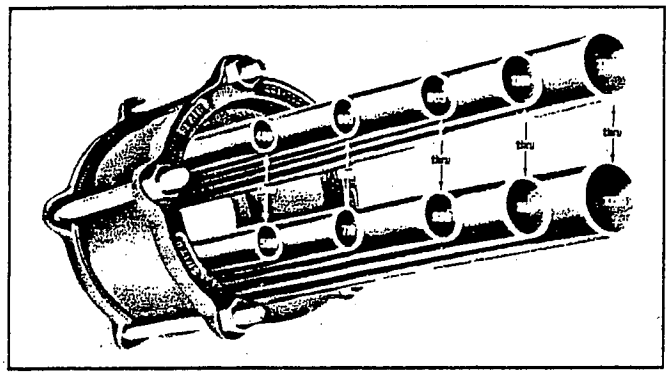

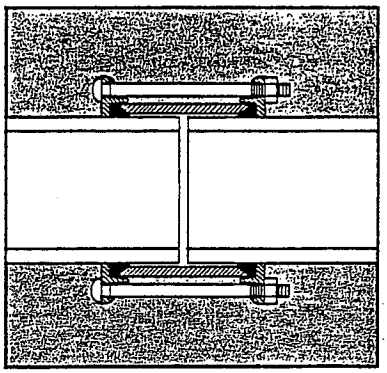

441 cast couplings for cast iron pipe

NOM. PIPE SIZE INCHES	PIPE O.D. RANGE INCHES	CODE CATALOG NUMBER	APPROX. SHIPPING WEIGHT LBS.	BOLTS			SLEEVE LENGTH INCHES
				NO.	DIA. IN.	LGTH. IN.	
2	2.34- 2.63	441-0250-000	7	2	⅝	8	5
4	4.80- 5.00	441-0500-000	20	4	⅝	9	6
6	6.90- 7.10	441-0710-000	26	5	⅝	9	6
8	9.05- 9.30	441-0930-000	35	6	⅝	9	6
10	11.10-11.40	441-1140-000	42	7	⅝	9	6
12	13.20-13.50	441-1350-000	53	8	⅝	9	6

Type 441 Couplings will connect any two pipes within the O.D. Range without changing any parts.
Suitable anchorage must be provided when excessive pipe movement could occur.

441 cast s[illegible] [illegible] transition couplings (cont'd.)

Nominal Pipe Size Inches	Catalog Number	O.D. End 1 Inches	O.D. End 2 Inches	Overall Bolt & Laying Length Inches	⅝" Bolt Quantity Required	Sleeve Length Inches	Approximate Shipping Weight Lbs.
4	441-00000415-900	4.00-4.15	4.00-4.15	8½	4	5	15
	441-00000450-900	4.50	4.50				
	441-00000510-900	4.80-5.10	4.80-5.10				
	441-00000545-900	5.11-5.45	5.11-5.45				
	441-04500415-900	4.50	4.00-4.15				
	441-05100415-900	4.80-5.10	4.00-4.15				
	441-05100450-900	4.80-5.10	4.50				
	441-05450415-900	5.11-5.45	4.00-4.15				
	441-05450450-900	5.11-5.45	4.50				
	441-05450510-900	5.11-5.45	4.80-5.10				
6	441-00000615-900	6.00-6.15	6.00-6.15	8½	4	5	25
	441-00000663-900	6.63	6.63				
	441-00000722-900	6.90-7.22	6.90-7.22				
	441-00000765-900	7.25-7.65	7.25-7.65				
	441-06630615-900	6.63	6.00-6.15				
	441-07220615-900	6.90-7.22	6.00-6.15				
	441-07220663-900	6.90-7.22	6.63				
	441-07650615-900	7.25-7.65	6.00-6.15				
	441-07650663-900	7.25-7.65	6.63				
	441-07650722-900	7.25-7.65	6.90-7.22				
8	441-00000800-900	8.00	8.00	8½	6	5	31
	441-00000863-900	8.63	8.63				
	441-00000930-900	9.05-9.30	9.05-9.30				
	441-00000945-900	9.05-9.45	9.05-9.45				
	441-00000985-900	9.46-9.85	9.46-9.85				
	441-08630800-900	8.63	8.00				
	441-09450800-900	9.05-9.45	8.00				
	441-09450863-900	9.05-9.45	8.63				
	*441-09850800-900	9.46-9.85	8.00				
	*441-09850863-900	9.46-9.85	8.63				
	*441-09850945-900	9.46-9.85	9.05-9.45				
10	441-00001000-900	10.00	10.00	9½	6	6	47½
	441-00001075-900	10.75	10.75				
	441-00001160-900	11.10-11.60	11.10-11.60				
	441-00001188-900	11.65-11.88	11.65-11.88				
	441-00001220-900	11.90-12.20	11.90-12.20				
	441-10751000-900	10.75	10.00				
	441-11601000-900	11.10-11.60	10.00				
	441-11601075-900	11.10-11.60	10.75				
	441-11881000-900	11.65-11.88	10.00				
	441-11881075-900	11.65-11.88	10.75				
	441-11881160-900	11.65-11.88	11.10-11.60				
	441-12201000-900	11.90-12.20	10.00				
	441-12201075-900	11.90-12.20	10.75				
	441-12201160-900	11.90-12.20	11.10-11.60				
	441-12201188-900	11.90-12.20	11.65-11.88				

Type 441 Couplings will connect any two pipes within the O.D. Range without changing any parts.
Suitable anchorage must be provided when excessive pipe movement could occur.
*Will be furnished with a grey color sleeve for asbestos cement pipe O.D.'s.

ROMAC INDUSTRIES, INC.

ONE END			BY	OTHER END		
COLOR CODE	GASKET RANGE	APPROXIMATE USE	X	COLOR CODE	GASKET RANGE	APPROXIMATE USE
10" NOMINAL PIPE SIZE LIST PRICE **$142.34**				ADD-ON FOR 304 S.S. B & N $41.72 ADD-ON FOR FUSION EPOXY $88.25		
RED	9.80—10.10 A* 10.70—11.00 A*	O.D. Stl. Std. Stl.	X	RED	9.80—10.10 A* 10.70—11.00 A*	O.D. Stl. Std. Stl.
BLACK	10.70—10.80 B 10.89—11.40 B*	Std. Stl. Cast Iron		BLACK	10.70—10.80 B 10.89—11.40 B*	Std. Stl. Cast Iron
YELLOW	11.55—11.75 B* 11.80—12.12 B*	A/C M.E. A/C R.B.		YELLOW	11.55—11.75 B* 11.80—12.12 B*	A/C M.E. A/C R.B.
12" NOMINAL PIPE SIZE LIST PRICE **$171.19**				ADD-ON FOR 304 S.S. B & N $47.68 ADD-ON FOR FUSION EPOXY $104.86		
RED	11.81—12.10 A* 11.95—12.25 A* 12.65—12.95 A*	O.D. Stl. Std. Stl.	X	RED	11.81—12.10 A* 11.95—12.25 A* 12.65—12.95 A*	O.D. Stl. Std. Stl.
BLACK	12.70—12.80 B* 13.15—13.55 B*	Std. Stl. Cast Iron		BLACK	12.70—12.80 B* 13.15—13.55 B*	Std. Stl. Cast Iron
YELLOW	13.85—14.10 B* 14.20—14.40 B*	A/C M. E. A/C R.B.		YELLOW	13.85—14.10 B* 14.20—14.40 B*	A/C M. E. A/C R.B.
14" NOMINAL PIPE SIZE LIST PRICE **$290.98**				ADD-ON FOR 304 S.S. B & N $53.64 ADD-ON FOR FUSION EPOXY $122.89		
14.00" (Please refer to 12")			X			
BLACK	14.60—15.00 15.30—15.70	Cast Iron		BLACK	14.60—15.00 15.30—15.70	Cast Iron
RED	16.00—16.40	A/C M.E. & O.D. Stl.		RED	16.00—16.40	A/C M.E. & O.D. Stl.
YELLOW	16.40—16.88	A/C R.B.		YELLOW	16.40—16.88	A/C R.B.
16" NOMINAL PIPE SIZE LIST PRICE **$350.57**				ADD-ON FOR 304 S.S. B & N $59.60 ADD-ON FOR FUSION EPOXY $138.11		
16.00" (Please refer to 14")			X			
BLACK	17.05—17.40 17.40—17.80	D.I. & Cast Iron D.I. & A/C R.B.		BLACK	17.05—17.40 17.40—17.80	D.I. & Cast Iron D.I. & A/C R.B.
RED	18.00—18.40	O.D. Stl.		RED	18.00—18.40	O.D. Stl.
YELLOW	18.45—18.97	A/C M.E. & R.B.		YELLOW	18.45—18.97	A/C M.E. & R.B.
18" NOMINAL PIPE SIZE LIST PRICE **$520.75**				ADD-ON FOR 304 S.S. B & N $71.52 ADD-ON FOR FUSION EPOXY $149.04		
RED	18.70—19.10		X	RED	18.70—19.10	
BLACK	19.10—19.70			BLACK	19.10—19.70	
YELLOW	19.70—20.25			YELLOW	19.70—20.25	
20" NOMINAL PIPE SIZE LIST PRICE **$624.52**				ADD-ON FOR 304 S.S. B & N $71.52 ADD-ON FOR FUSION EPOXY $156.81		
RED	20.80—21.35		X	RED	20.80—21.35	
BLACK	21.35—21.75			BLACK	21.35—21.75	
YELLOW	21.75—22.25			YELLOW	21.75—22.25	
22" NOMINAL PIPE SIZE LIST PRICE **$677.93**				ADD-ON FOR 304 S.S. B & N $77.48 ADD-ON FOR FUSION EPOXY $167.53		
RED	22.95—23.35		X	RED	22.95—23.35	
BLACK	23.45—23.85			BLACK	23.45—23.85	
YELLOW	23.75—24.25			YELLOW	23.75—24.25	
24" NOMINAL PIPE SIZE LIST PRICE **$1062.32**				ADD-ON FOR 304 S.S. B & N $110.18 ADD-ON FOR FUSION EPOXY $223.13		
RED	24.75—25.30		X	RED	24.75—25.30	
BLACK	25.30—25.80			BLACK	25.30—25.80	
YELLOW	26.10—26.32			YELLOW	26.10—26.32	

* To accommodate the wider range of pipe sizes within the 10" and 12" categories, it is necessary that the center rings be made in three sizes: A, AB, and B. Note drawing.

Flexible couplings do not provide protection against possible pullout of pipe ends in unrestrained conditions.

48" I.D., 2 WAY, 180 °, 8" CHANNEL STANDARD BASE

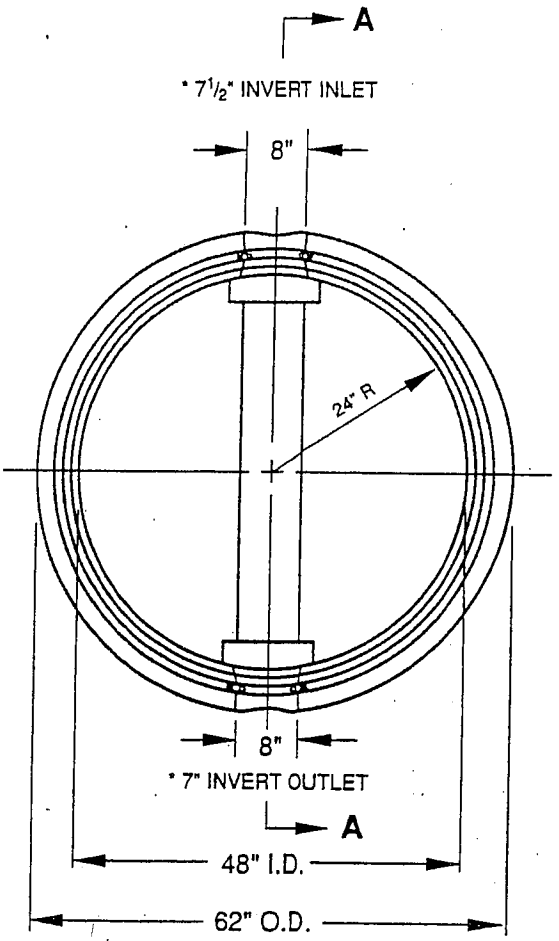

TOP VIEW

* INVERT = Distance from invert to bottom of base.

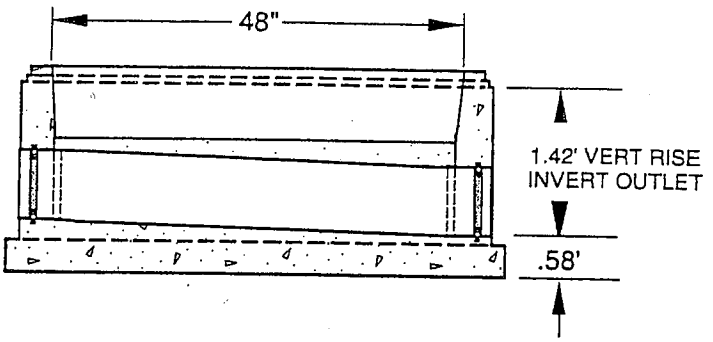

SECTION AA

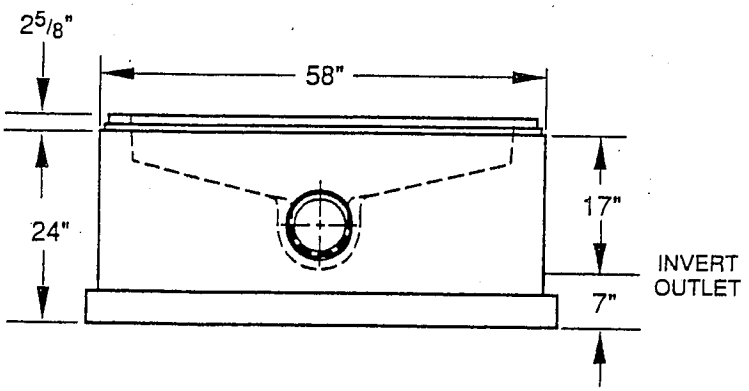

SIDE VIEW

CONFORMS TO ASTM SPECS C-478 and AASHTO No: M199-811.

APPROX. WEIGHT: 4400 LBS.

No. 48-1W180-8P for use with 8" I.D. SDR 35 PVC or other pipes with 8.50 O.D. ±1/4".

No. 48-1W180-8C for use with 8" I.D. ESVCP or other pipes with 9.75" O.D. ±1/4".

Bases with 1 way 8" channels for use with 8" I.D. pipes with O.D.'s not within the tolerances shown above are available on a made to order basis.

FOR COMPLETE DESIGN INFORMATION, CONSULT JENSEN PRECAST.

6/93

© 1993 Jensen Precast

JENSEN PRECAST Since 1968

Manhole Rings and Cover

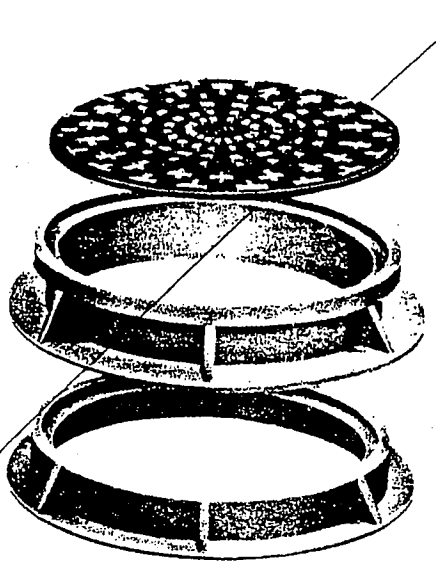

A-1021 Approximate Wt. 398
(Dimension A = 6⅝")

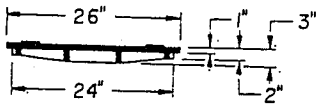

A-1022 Approximate Wt. 373
(Dimension A = 5")

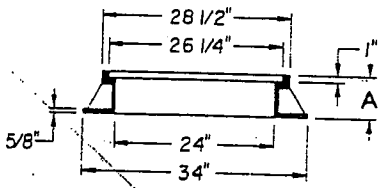

A-1023 Approximate Wt. 339
(Dimension B = 3")

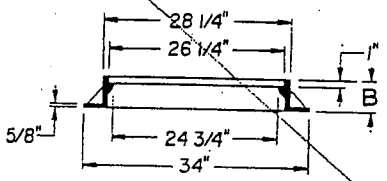

A-1024 **Manhole Ring and Cover**
Approximate Wt. 284
(Option with groove & 'O' ring gasket)

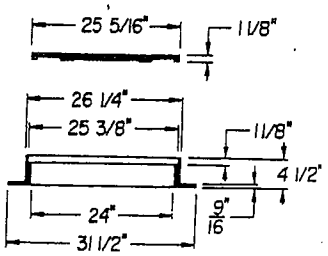

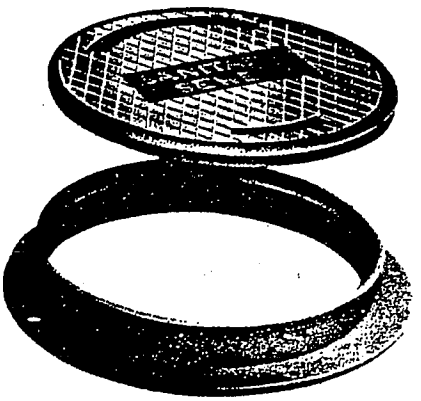

G12 Traffic Valve Box
14-1/2" I.D. x 12"

Christy

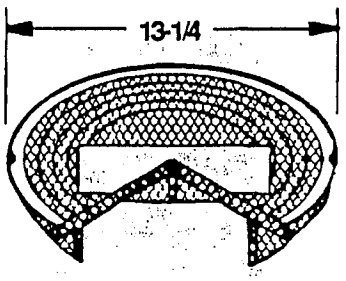

A high density reinforced concrete box used for access to underground valves. Cast iron tapered lid and seat with debris proof design, permits snug fit and easy removal. The special concrete design of the box assists to maintain the grade under heavy traffic and isolate the pipeline from road shock.

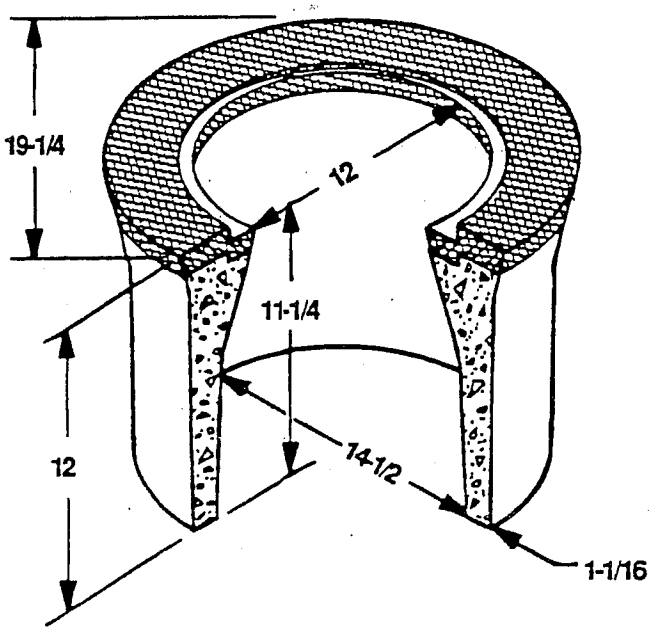

Designed to enclose large shut off valves in heavy auto and truck traffic areas. Telescoping extensions facilitate installation at job site and help to isolate pipeline from road shock.

CHRISTY ORDERING CODE	ITEM	APPROX. SHIPPING WEIGHT	DESCRIPTION
G12BOX	**BOX**	**110**	**Traffic Valve Box (14-1/2" I.D. x 12")-10 Per Pallet**
G12C	Lid	25	Cast Iron, Traffic
G12X12	Extension	49	12" Concrete-18 Per Pallet

H-6520 thru H-6532

Lamp Hole Cover

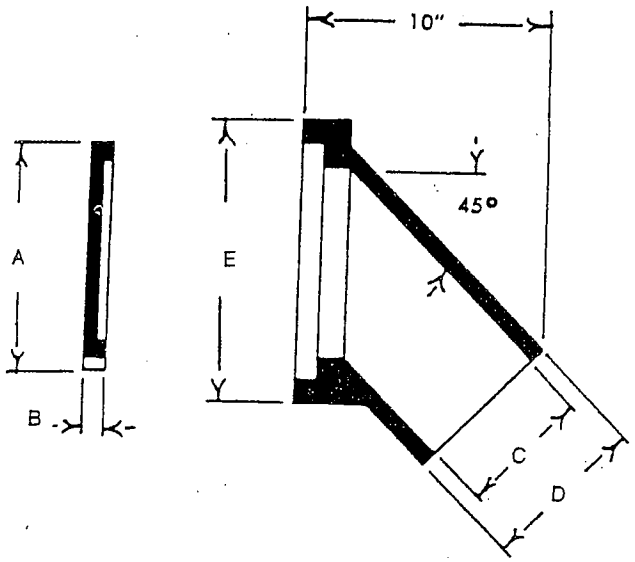

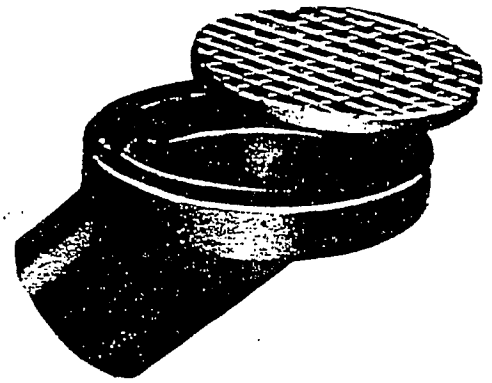

Catalog No.	Dimensions in Inches					Approx. Wt.
	A	B	C	D	E	
H-6520	7¾ × 10¼	1	6	7	10 × 12½	58
H-6521	10¼ × 13¾	1	8½	9¾	12½ × 16	140
√ H-6530	9¾ × 13½	1	8	9½	11⅝ × 15⅜	85
√ H-6531	11⅜ × 15 11/16	1	9½	10½	13⅜ × 17 9/16	150
H-6532	14½ × 18¼	⅝	11½	13	16¾ × 20½	195

D and L SUPPLY
Construction Castings

South Bay Foundry
P.O. Box 1256 • National City, CA 92050 • Telephone: (714) 474-8481
P.O. Box 3308 • Hayward, CA 94540 • Telephone: (415) 887-1836

SEWER CLEANOUT OR VALVE BOX

B 13

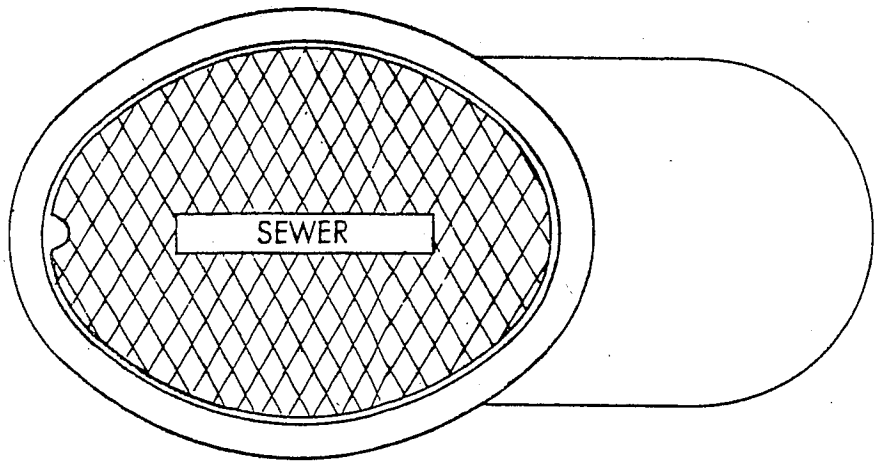

SBF 1249

SET WEIGHT	
Frame	120 Lbs
Lid	20 Lbs
Total	140 Lbs

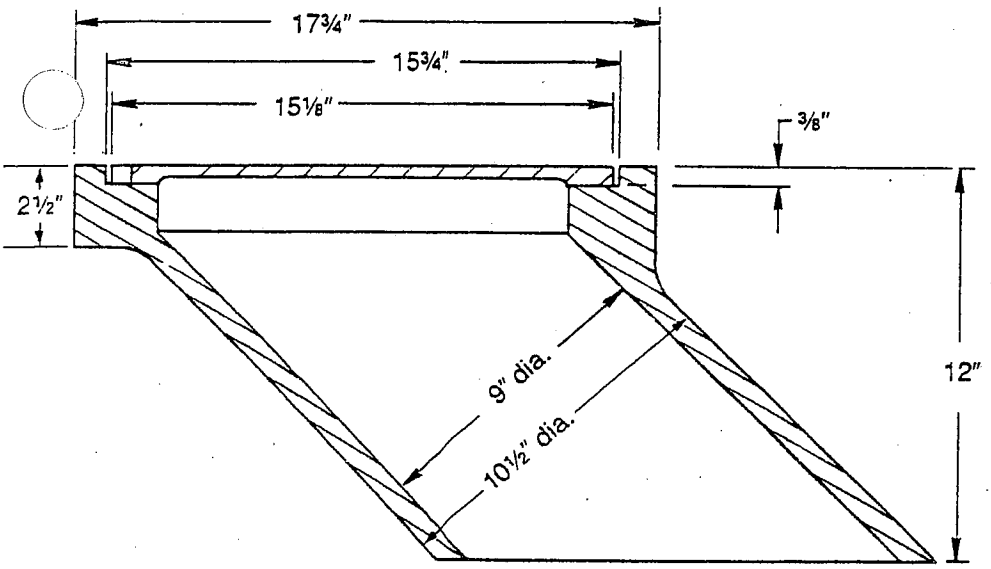

APPROVED

By: _____
Title: _____
Agency: _____
Date: _____

COMMENTS

_____
_____
_____

General Information

- All materials used in MFG. shall conform to ASTM 48-30.
- Castings shall be dipped in black bituminous paint.
- Standard cover markings available: "SEWER," "WATER," or as per required letter designation.

Gripper® Mechanical Plugs

Form 103-853 ©1988 Cherne Industries, Inc. All rights reserved.

GRIPPER STYLE	PART NUMBER	NOMINAL SIZE	PERFORMANCE RATING				PRODUCT WEIGHTS & DIMENSIONS					CARTON QUANTITY
			SIZE USAGE RANGE		MAXIMUM ALLOWABLE BACKPRESSURE		PLUG SIZE		APPROX. PRODUCT WEIGHT	APPROX. SHIPPING WEIGHT PER CARTON	APPROX. SHIPPING DIMENSIONS	
			MINIMUM DIAMETER	MAXIMUM DIAMETER	AIR PSIG	WATER FT. HD.	DIAMETER	LENGTH				
End of Pipe Gripper	270-210	**1.5"** (38.1mm)	1.53" (38.86mm)	1.65" (41.91mm)	5 PSIG (.34 bar)	40 FT. HD. (12.2 meters)	1.51" (38.35mm)	1.75" (44.45mm)	2 OZ. (0.06 kg)	1.5 LBS. (0.68 kg)	4.25" x 4.25" x 4.25"	10
	270-229	**2.0"** (50.8mm)	1.90" (48.26mm)	2.17" (55.12mm)	5 PSIG (.34 bar)	40 FT. HD. (12.2 meters)	1.89" (47.88mm)	1.87" (47.50mm)	3 OZ. (0.08 kg)	2 LBS. (0.91 kg)	5.50" x 5.50" x 5.00"	10
	270-237	**3.0"** (76.2mm)	2.78" (70.61mm)	3.10" (78.74mm)	5 PSIG (.34 bar)	40 FT. HD. (12.2 meters)	2.76" (70.10mm)	2.50" (63.50mm)	6 OZ. (0.17 kg)	4.25 LBS. (1.93 kg)	7.00" x 7.00" x 7.00"	10
	270-245	**4.0"** (101.6mm)	3.78" (96.01mm)	4.06" (103.12mm)	5 PSIG (.34 bar)	40 FT. HD. (12.2 meters)	3.76" (95.50mm)	2.50" (63.50mm)	8 OZ. (0.23 kg)	6 LBS. (2.72 kg)	8.25" x 8.25" x 8.25"	10
	270-261	**6.0"** (152.4mm)	5.77" (146.56mm)	6.08" (154.43mm)	5 PSIG (.34 bar)	40 FT. HD. (12.2 meters)	5.75" (145.92mm)	3.75" (95.25mm)	2.5 LBS. (1.14 kg)	8.25 LBS. (3.75 kg)	9.50" x 9.50" x 9.50"	5
Inside Gripper	270-296	**4.0"** (101.6mm)	3.78" (96.01mm)	4.06" (103.12mm)	5 PSIG (.34 bar)	40 FT. HD. (12.2 meters)	3.76" (95.50mm)	2.50" (63.50mm)	8 OZ. (0.23 kg)	5.75 LBS. (2.61 kg)	8.25" x 8.25" x 8.25"	10
	270-253	**6.0"** (152.4mm)	5.77" (146.56mm)	6.08" (154.43mm)	5 PSIG (.34 bar)	30 FT. HD. (9.1 meters)	5.75" (145.92mm)	3.75" (95.25mm)	2.5 LBS. (1.14 kg)	12.25 LBS. (5.56 kg)	9.50" x 9.50" x 9.50"	5
	270-288	**8.0"** (203.2mm)	7.76" (197.10mm)	8.03" (203.96mm)	5 PSIG (.34 bar)	30 FT. HD. (9.1 meters)	7.75" (196.72mm)	3.75" (95.25mm)	3 LBS. (1.36 kg)	3.25 LBS. (1.48 kg)	8.25" x 8.25" x 5.50	1

ETCO SPECIALTY PRODUCTS, INC. P.O. BOX 144, GIRARD, KS 66743

"T" CONE® EXPANDABLE STOPPER AND CLEANOUT PLUG*

• Utility Sewer Pipe Plug • Cleanout or Test Plug for Building Drains & DWV Piping

— Reference Chart —

APPLICATION	NOMINAL SIZE	PART NO.	DESCRIPTION	SOCKET OR PIPE I.D.
PLASTIC PIPE BARREL 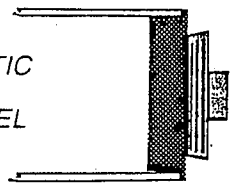	1"	S-102	1" SCH 40 PVC	1.050"
	1¼"	ST-104	1¼" PVC TUBULAR	1.125"
		S-125	1¼" SCH 40 DWV	1.380"
		S-125	1½" PVC TUBULAR	1.380"
	1½"	S-152	1½" SCH 40 DWV	1.610"
	2"	S-201	2" SCH 80 PIPE	1.939"
		S-202	2" SCH 40 DWV	2.067"
	3"	S-302	3" SCH 40 DWV	3.068"
	4"	S-401	4" ABS (SDR 23.5) SEWER	3.856"
		S-402	4" SCH 40 DWV	4.026"
		S-402	4" PVC SEWER & DRAIN	3.975"
		ST-425	4" PVC DR-18	4.266"
	5"	S-502	5" SCH 40 DWV	5.047"
		DB-560	5" PVC SDR 35	5.240"
	6"	S-601	6" PVC PSM (SDR 35)	5.915"
		S-601	6" PVC DR-14	5.914"
		S-602	6" SCH 40 DWV	6.065"
		S-602	6" PVC DR-18	6.134"
		EB-620	6" PVC DR-25	6.348"
	8"	S-802	8" PVC PSM (SDR 35)	7.920"
		S-802	8" SCH 40 DWV	7.981"
		S-802	8" PVC DR-18	7.990"
PLASTIC DRAINAGE SOCKET 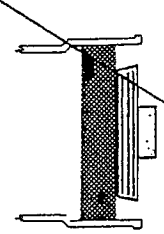	1"	ST-106	1" SCH 40 SOCKET	1.315"
	1¼"	-0-	-0-	
	1½"	ST-201	1½" SCH 40 SOCKET	1.900"
	2"	-0-	-0-	
	3"	S-300	3" SCH 40 SOCKET	3.500"
	3½"	ST-350	3½" SCH 40 SOCKET	4.000"
	4"	S-400	4" PVC SEWER & DRAIN	4.215"
		S-450	4" SCH 40 SOCKET	4.500"
	5"	S-560	5" SCH 40 SOCKET	5.563"
	6"	S-600	6" PVC PSM SOCKET	6.275"
		S-662	6" SCH 40 SOCKET	6.625"
CAST IRON HUB 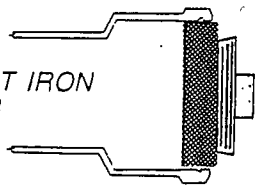	2"	S-302	CAST IRON HUB (SW)	2.94"
	3"	S-402	CAST IRON HUB (SW)	3.94"
	4"	S-502	CAST IRON HUB (SW)	4.94"
CAST IRON BARREL 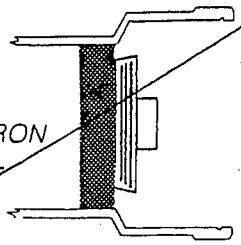	2"	S-201	CAST IRON BARREL (SW)	1.96"
	3"	S-301	CAST IRON BARREL (SW)	2.96"
	4"	S-402	CAST IRON BARREL (SW)	3.94"
	6"	S-601	CAST IRON BARREL (SW)	5.94"
		S-602	CAST IRON BARREL (EH)	6.09"
		S-600	LINED D.I. PIPE	6.25"
	4"	S-401	4" CLOSET BEND (SW)	3.85"

(*U.S. PATENT #4506705) (CANADIAN PATENT #1 223 827) TB-0188

G8 Traffic Valve Box 13" I.D. x 12"

Christy

Special lifting hole features incorporated in the lid design affords easy removal. Vandal resistance is optional at extra cost by the additions of hold down screws.

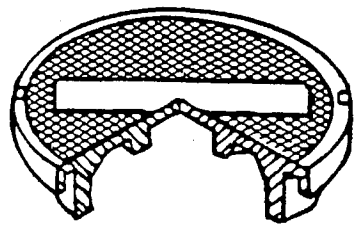

Unique locking grade rings assure permanence and quality of surface grades when streets are re-paved. Telescoping extensions facilitate installation at jobsite and act to isolate pipeline from road shock.

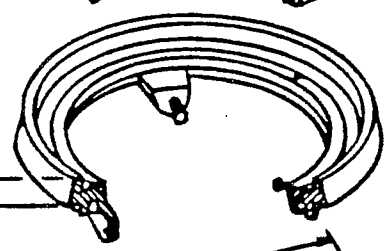

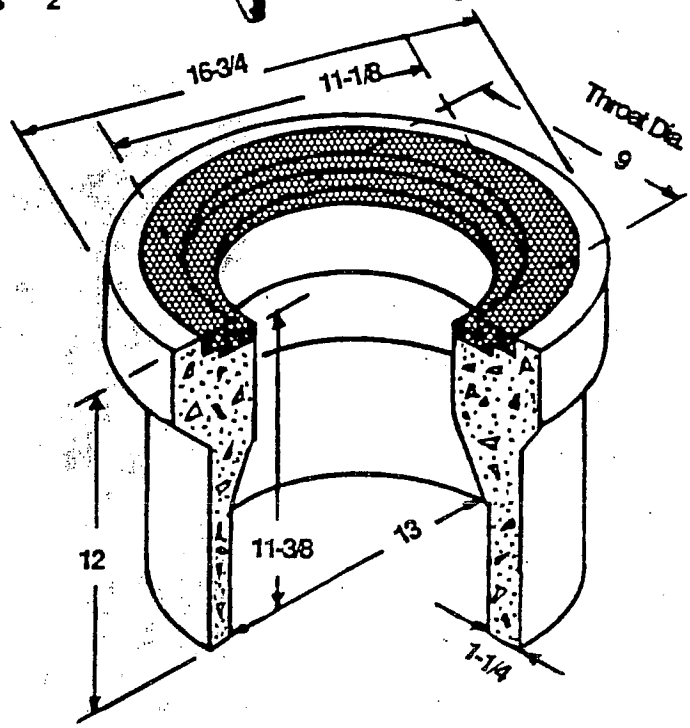

A high density reinforced concrete box used for access to underground valves. This box has a belled top to prevent settling. Approximate dimensions shown.

CHRISTY ORDERING CODE	ITEM	APPROX. SHIPPING WEIGHT	DESCRIPTION
G8BOX	Box	87	G8 Traffic Valve Box (13" I.D. x 12" High)—10 Per Pallet
G5C	Lid	10	Cast Iron, Traffic
G8X8	Extension	26	8" Concrete—27 Per Pallet
G8X12	Extension	40	12" Concrete—24 Per Pallet
G5GR10	Grade Ring	10	1" High, Cast Iron
G5GR15	Grade Ring	14	1-1/2" High, Cast Iron
G5GR20	Grade Ring	17	2" High, Cast Iron

SERIES 500 RESILIENT WEDGE VALVE

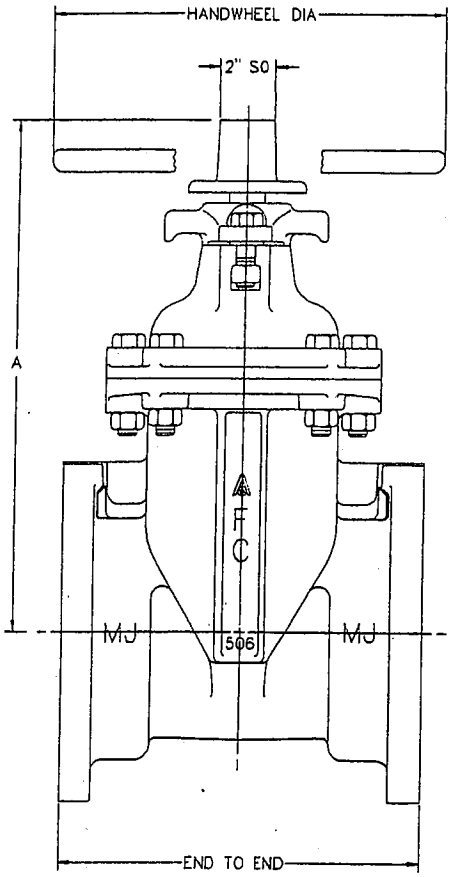

SUBMITTAL DATA

VALVE SIZE	2	2-1/2	3	4	6	8	10	12
QUANTITY								

NRS _____ OS&Y _____

DIRECTION OF OPENING _____ LEFT _____ RIGHT

END CONNECTION _____

OTHER REQUIREMENTS _____

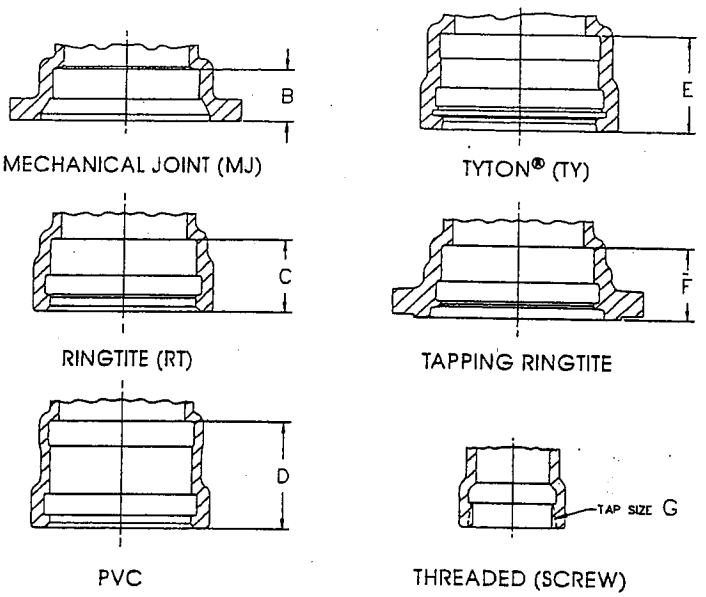

OPTIONAL END CONNECTIONS

DIMENSION	VALVE SIZE							
	2"	2-1/2"	3"	4"	6"	8"	10"	12"
End to End - MJ x MJ	8-1/4	-	9-1/2	11	12	12-1/2	14-3/4	15-5/8
End to End - FL x FL	7	7-1/2	8	9	10-1/2	11-1/2	13	14
End to End - RT x RT	-	-	-	12-1/4	13	14-1/2	16-1/4	19-1/8
End to End - TY x TY	-	-	-	13-1/2	16-7/8	18-1/2	20-1/2	22-3/8
End to End - FL x MJ	-	-	-	10	11-1/4	12	13-7/8	15-5/16
End to End - FL x RT	-	-	-	10-5/8	11-3/4	13	14-5/8	16-9/16
End to End - FL x TY	-	-	-	11-1/4	13-11/16	15	16-3/4	18-3/16
End to End - FL x MJ Tapping	-	-	-	10-1/8	11-1/4	12-5/8	13-7/8	15-5/16
End to End - FL x RT Tapping	-	-	-	10-11/16	11-7/8	13-1/16	-	-
End to End - PVC x PVC	10-3/4	11-1/4	12	13-1/2	16-7/8	18-1/2	-	-
End to End - Threaded	6-1/4	7-1/2	8-1/8	-	-	-	-	-
End to End - Cutting In	-	-	-	11	12	12-1/2	14-3/4	16-5/8
A	9-1/4	9-1/4	12-13/32	13-23/32	16-3/4	20-3/16	24-1/8	27-1/2
B	2-1/2	-	2-1/2	2-1/2	2-1/2	2-1/2	2-1/2	2-1/2
C	-	-	-	3-1/2	3-1/2	3-1/2	3-1/2	4
D	3-3/4	4	4	4	5-7/32	5-1/2	-	-
E	-	-	-	4	5-7/32	5-1/2	5-5/8	5-5/8
F	-	-	-	3-5/8	3-5/8	3-5/8	-	-
G	2 NPT	2-1/2 NPT	3 NPT	-	-	-	-	-
Center to Top of Stem (Closed) - OS&Y	11-1/2	11-1/2	17-13/16	18-15/16	23-7/8	29-1/2	38	41-1/4
Center to Top of Stem (Open) - OS&Y	13-5/8	13-5/8	22-1/16	23-3/16	29-13/16	37-3/4	48	53-5/8
Handwheel Diameter	8	8	10	10	12	14	16	16
No. of Turns to Open	9	9	10	13	19	26	32	38

FEATURES/BENEFITS

The **Series 500** Resilient Wedge Gate Valve is designed for use in potable water, sewage, fire protection systems as well as irrigation and backflow control systems.

Ductile Iron Wedge

This valve features a high strength ductile iron wedge encapsulated by a bonded-in-place nitrile elastomer. This allows the valve to seal bottle tight equally well with the flow in either direction. The bronze stem nut is independent of the wedge. This feature allows the wedge to self-adjust for the best seating possible and eliminates stem binding.

Fusion Bonded Epoxy

The **Series 500** valve is fully epoxy coated on the interior as well as the exterior. The fusion bonded coating is applied prior to assembly so that even the bolt holes and body-to-bonnet flange surfaces are epoxy coated.

Triple O-ring Stem Seals

This valve features triple O-ring stem seals. Two O-rings are located above the thrust collar and one O-ring is located below the thrust collar. The lower two O-rings provide a permanently sealed lubrication chamber. The benefit being that the valve will be easy to operate over a long period of time. The upper O-ring assures that sand, dirt or grit cannot enter the valve to cause damage to the lower O-rings. This is especially important for buried and sewage service applications.

Thrust Washers

Two thrust washers are used. One is located above and one is located below the thrust collar. These thrust washers greatly reduce required operational torques.

No Flat Gaskets

The body-to-bonnet and bonnet-to-bonnet cover seals are pressure energized O-rings. This eliminates the need for excessive bolt loading which is required by designs that use flat gaskets. The O-rings are reusable which eliminates down time during any needed repair.

The **Series 500** Resilient Wedge Gate Valve is in full compliance with AWWA C509. This valve can also be furnished in configurations that are listed by Underwriters Laboratories, Inc. and approved by Factory Mutual Research Corporation.

The **Series 500 Resilient Wedge Gate Valve** has these standard features:

- **Fusion Bonded Epoxy Coating Complies with ANSI/AWWA C550**
- **Ductile Iron Wrench Nut for Durability**
- **Ductile Iron Rubber Encapsulated Wedge**
- **100% Bottle Tight Closure at 200 P.S.I.**
- **2"-12" Sizes**
- **Independent Bronze Stem Nut**
- **Smooth (No Pocket) Waterway**
- **Triple O-ring Stem Seals**
- **Full Diameter Waterway**

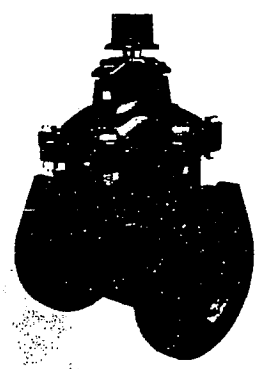

SAMPLE SPECS

Valves shall be resilient wedge type in compliance with AWWA C509 latest revisions. Wedge shall be constructed of ductile iron. The exterior of the ductile iron wedge shall be encapsulated with nitrile rubber.

The wedge shall be symmetrical and seal equally well with flow in either direction. There shall be no exposed metal seams, edges or screws within the waterway when the valve is in the fully closed position.

The stem shall be bronze in full compliance with Section 4.7 of AWWA C509.

Wrench nut shall be constructed of ductile iron. Wrench nut shall have four flats at stem connection to assure even distribution of operating input torque to the stem.

All body-to-bonnet and bonnet-to-cover seals shall be O-rings. Flat gaskets shall not be allowed.

Stem shall be sealed by three O-rings. The top two O-rings shall be replaceable with valve fully open and while subject to full rated working pressure. O-rings set in a cartridge shall not be allowed.

Valve shall have thrust washers located above and below thrust collar to assure easy operation of the valve.

All internal and external ferrous surfaces of the valve body and bonnet shall have a fusion bonded epoxy coating, complying with ANSI/AWWA C550, applied electrostatically prior to assembly.

Valves shall be equal to American Flow Control's **Series 500** Resilient Wedge Gate Valve.

AVAILABLE END CONNECTIONS & DIMENSIONS FOR CLOW RESILIENT WEDGE VALVE

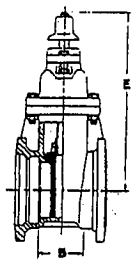

F-6100
MECHANICAL JOINT
2"-12"

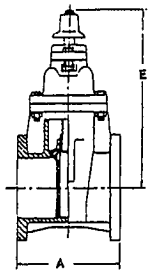

F-6102
FLANGED
2"-12"

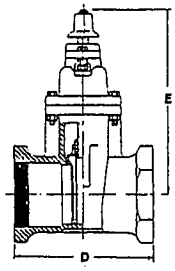

F-6103
THREADED ENDS
2"-3"

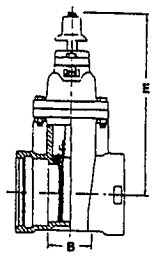

F-6104
RINGTITE
4"-12"

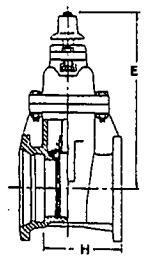

F-6106
FLGD. & MECH. JT.
3"-12"

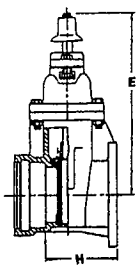

F-6108
FLANGED & RINGTITE
4"-12"

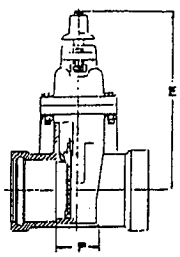

F-6110
PUSH-ON FOR PVC
2"-8"

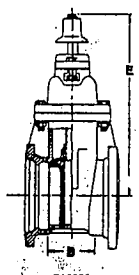

F-6111
MECHANICAL
CUTTING-IN JOINT
4"-8"

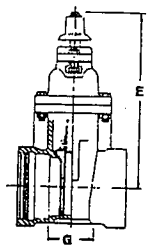

F-6112
PUSH-ON ENDS
FOR CAST IRON PIPE
4"-12"

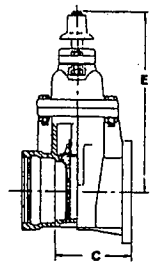

F-6113
FLANGED & PUSH-ON
4"-12"

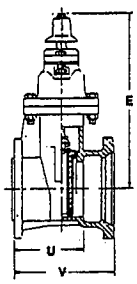

F-6114
MECH. JT. FOR TAPPING
4"-12"

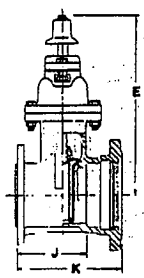

F-6115
PUSH-ON FOR TAPPING
4"-8"

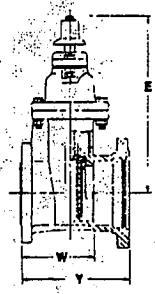

F-6116
RINGTITE FOR TAPPING
4"-8"

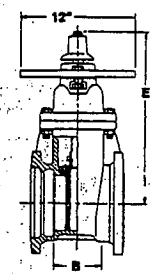

F-6120
MECHANICAL JOINT
INDICATOR POST VALVE
2"-12"

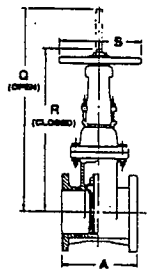

F-6136
FLGD. OS & Y CONSTRUCTION
2-1/2"-12"

	A	B	C	D	E	G	H	J	K	P	Q	R	S	U	V	W	Y	No. of Turns to Full Open
2"	7	3-1/4		5-1/4	10-7/8	—	—	—	—	3	—	—	7-1/4	—	—	—	—	4-3/4
2-1/2"	7-1/2	—	—	7	11-3/8	—	—	—	—	3-1/4	16-3/8	13-7/8	7-1/4	—	—	—	—	5-1/2
3"	8	3-1/2	—	7-1/8	12-3/8	—	5-3/4	—	—	3-1/2	18-7/8	15-5/8	10	—	—	—	—	10
4"	9	4-1/2	6-3/4	—	14-3/4	4-1/2	6-3/4	6-3/4	10-3/8	4-1/2	22-3/4	18-1/4	10	6-3/4	9-3/4	6-3/4	10-1/4	13-1/2
6"	10-1/2	5	7-7/8	—	19	5-1/4	7-3/4	8-1/4	12	5	30-1/8	23-3/4	12	7-3/4	11-1/4	7-3/4	11-1/4	19-1/2
8"	11-1/2	5-1/2	8-1/2	—	22-1/2	5-5/8	8-1/2	8-1/2	12-3/4	5-1/2	37-3/4	29-1/4	14	8-1/2	11-3/4	9-1/4	12-3/4	25-1/2
10"	13	7	10	—	26-1/2	7	10	—	—	—	45-3/4	35-3/8	18	10	13-1/2	—	—	31-1/2
12"	14	8	11-1/4	—	30	8-1/2	11	—	—	—	53-1/8	40-5/8	18	11	14-3/4	—	—	37-3/4

CLOW VALVE CO.
1375 Magnolia Avenue
Corona, California 91719
Phone 714-735-5555
FAX 714-735-0837

CLOW
VALVE COMPANY
A Division of McWane, Incorporated

CLOW VALVE CO.
902 South 2nd Street
Oskaloosa, Iowa 52577
Phone 515-673-8611
FAX 515-673-8269

SIZE RANGE

END CONFIGURATIONS

NON-RISING STEM

END STYLES	STYLE NO.	2"	2½"	3"	4"	6"	8"	10"	12"	14"	16"	20"
Mech. Joint	4067-01	•		•	•	•	•	•	•	•	•	•
Flanged	4067-02	•	•	•	•	•	•	•	•	•	•	•
Screwed	4067-07	•	•	•								
Flange × MJ	4067-13			•	•	•	•	•	•	•	•	•
Push-On	4067-22				•	•		•	•		•	
F × Push-on	4067-23				•	•	•	•	•			
Sch. 40 PVC	4067-03	•	•	•								

OUTSIDE SCREW & YOKE

Flanged	4068-02		•	•	•	•	•	•	•	•	•	•

TAPPING VALVES (accepts full size cutter)

Flange × MJ	4751-01				•	•	•	•	•	•	•	•
F × Push-on	4751-22				•	•	•	•	•			

INDICATOR POST VALVES

Mech. Joint	4082-01			•	•	•	•	•	•			

Indicator Post Valves available in other NRS configurations — contact factory.

MECHANICAL JOINT CUTTING-IN VALVE

Mech. Joint	4067-20				•	•	•					

STYLE 4071-01
INDICATOR POST VALVE

SUGGESTED SPECIFICATIONS

R/W valves shall conform to the latest revision of AWWA Standard C-509 for 2"-12" and 14", 16" & 20". Sizes 2"-12" shall be UL listed and FM approved.

All internal parts shall be accessible for repair or maintenance without removing the body from the line. The wedge shall be of cast iron and completely encapsulated with a resilient elastomer material permanently bonded to the wedge and have a rubber tearing bond that meets ASTM D429.

NRS and OS&Y stems shall be of cast bronze. NRS stems shall have integral thrust collar with Delrin thrust bearing above and below the collar. NRS stems shall have two machined grooves above the thrust collar and one groove below for O-ring seals in sizes 2"-12". The upper two O-rings shall be field removable with the valve under pressure.

For 14", 16" & 20" NRS, two O-rings shall be set in machined grooves in seal plate.

The stem seal plate shall have an O-ring gasket to seal against the bonnet secured with bolts and nuts. Blind bolts threaded into tapped holes in bonnet or body shall not be acceptable.

The stem nut shall be of cast bronze and independent of the stem and wedge for NRS valves. Stem nuts for OS&Y valves shall be securely fastened to the stem.

The body, bonnet and seal plate shall have factory applied thermoplastic epoxy coating on all interior and exterior surfaces. Coating designation shall be M&H 0601 in compliance with AWWA C-550.

All R/W gate valves shall be rated for 200 psi WWP and hydrostatically tested to 400 psi.

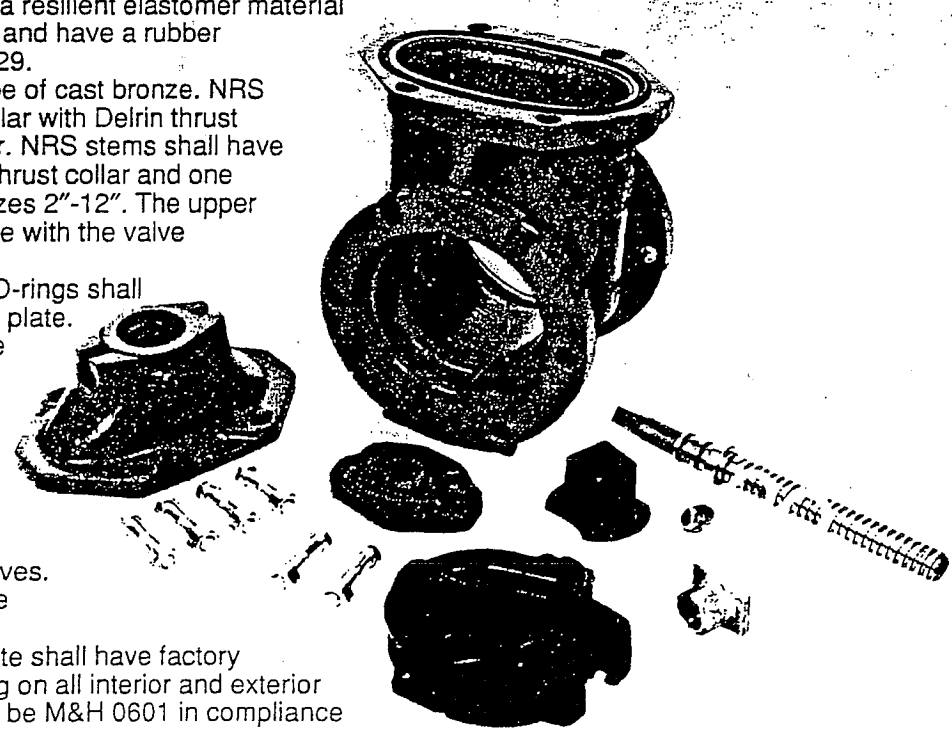

COMPONENTS

MUELLER® A-2360 RESILIENT WEDGE GATE VALVE WITH FL. x FL. ENDS

- ☐ Catalog number---
  A-2360-6 flanged ends
- ☐ Sizes--- 2", 2-1/2", 3", 4", 6", 8", 10", 12"
- ☐ Meets or exceeds all applicable requirements of ANSI/AWWA C509 Standard
- ☐ Flanged end dimensions and drilling comply with ANSI B16.1, class 125
- ☐ Iron body with nominal 10 mils MUELLER® Pro-Gard™ Fusion Epoxy Coated interior and exterior surfaces
- ☐ Epoxy coating meets or exceeds all applicable requirements of ANSI/AWWA C550 Standard and is certified to ANSI/NSF 61
- ☐ Iron wedge, symmetrical & fully encapsulated with molded rubber; no exposed iron
- ☐ Non-rising stem (NRS)
- ☐ Triple O-ring seal stuffing box (2 upper & 1 lower O-rings)
- ☐ Handwheel (2" square wrench nut optional)---open left or open right
- ☐ 2"-12" sizes---250 psig (1723 kPa) maximum working pressure, 500 psig (3447 kPa) static test pressure

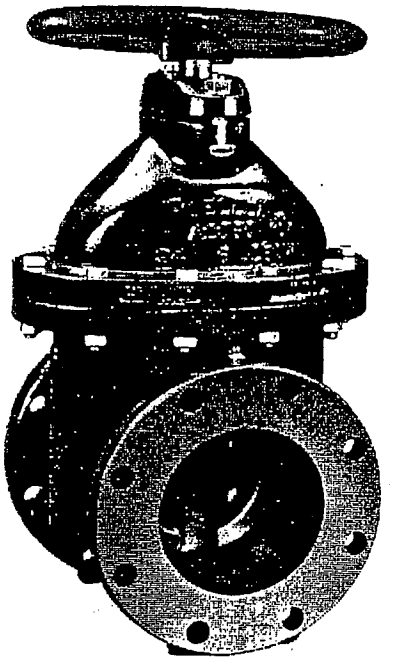

A-2360-6

Options

See pages 10.54 and 10.55 for more information on Resilient Wedge Gate Valve options

- ☐ Position indicators
- ☐ ASTM B98-C66100/H04 stem
- ☐ Stainless steel fasteners: Type 304, Type 316
- ☐ 2" square wrench nut

Resilient wedge gate valve parts

Catalog Part No.	Description	Material	Material standard
G-16	Bonnet Bolts & Nuts	Carbon Steel	ASTM A307 Grade B, Zinc Plated
G-41	Stuffing Box Bolts & Nuts	Carbon Steel	ASTM A307 Grade B, Zinc Plated
G-49	Stem O -rings (3)	Rubber	ASTM D2000
G-200	Wrench Nut Cap Screw	Carbon Steel	ASTM A307 Grade B, Zinc Plated
G-201	Stuffing Box Seal	Rubber	ASTM D2000
G-202	Wrench Nut	Cast Iron	ASTM A126 CL.B
G-203	Stem	Bronze	ASTM B138
G-204	Hand Wheel (not shown)	Cast Iron	ASTM A126 CL.B
G-205	Stem Nut	Bronze	ASTM B62
G-206	Guide Cap Bearings	Celcon	
G-207	Stuffing Box	Cast iron	ASTM A126 CL.B
G-208	Anti-friction Washers (2)	Celcon	
G-209	Wedge, Rubber Encapsulated	Cast Iron*	ASTM A126 CL.B
G-210	Bonnet	Cast Iron	ASTM A126 CL.B
G-211	Bonnet Gasket	Rubber	ASTM D2000
G-212	Body	Cast Iron	ASTM A126 CL.B

* Fully encapsulated in molded rubber with no iron exposed

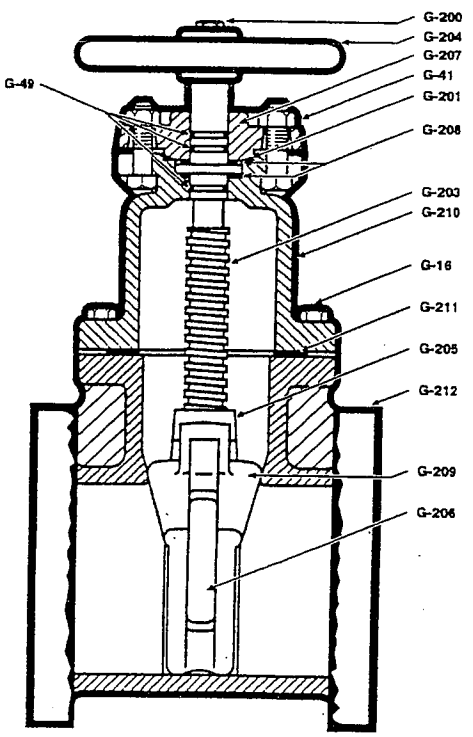

SEE PAGE 10.59 FOR ORDERING INSTRUCTIONS

500 GALLON SAND-OIL INTERCEPTOR

MODEL 500EE

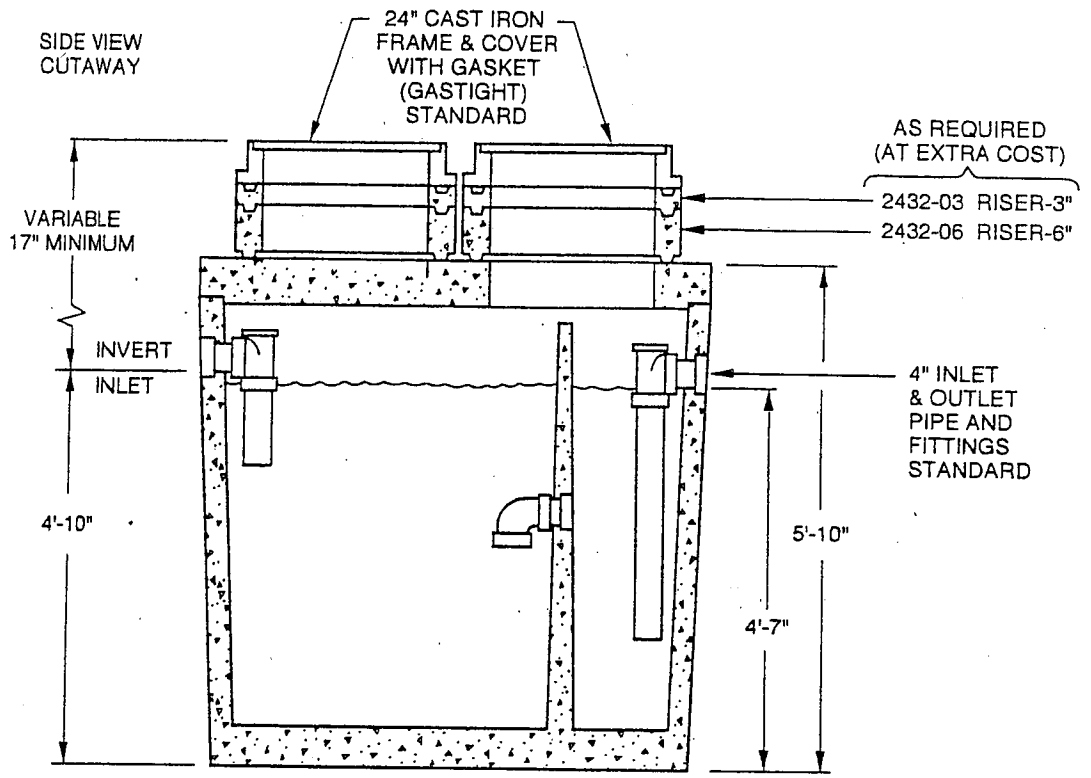

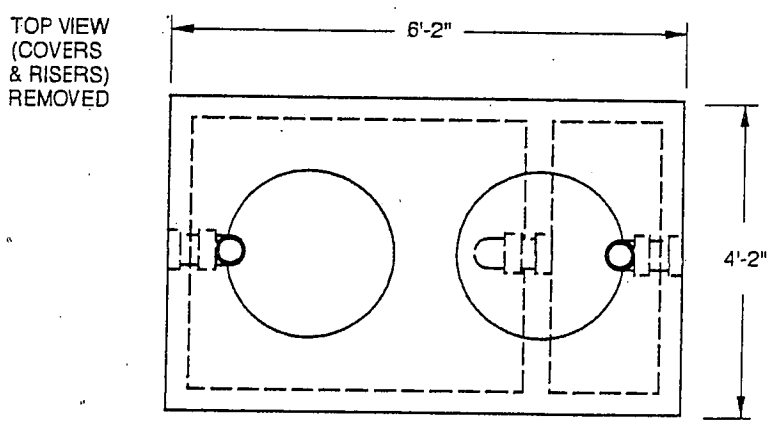

LIQUID CAPACITY: 500 GALLONS

BOX DESIGN LOAD: H-20 TRAFFIC FROM 1' TO 6' OF COVER. FOR COMPLETE DESIGN, AND PRODUCT INFORMATION, CONTACT JENSEN PRECAST.

10/6/93

© 1993 Jensen Precast

JENSEN PRECAST Since 1968

1000 GALLON SAND-OIL INTERCEPTOR

MODEL 1000EE

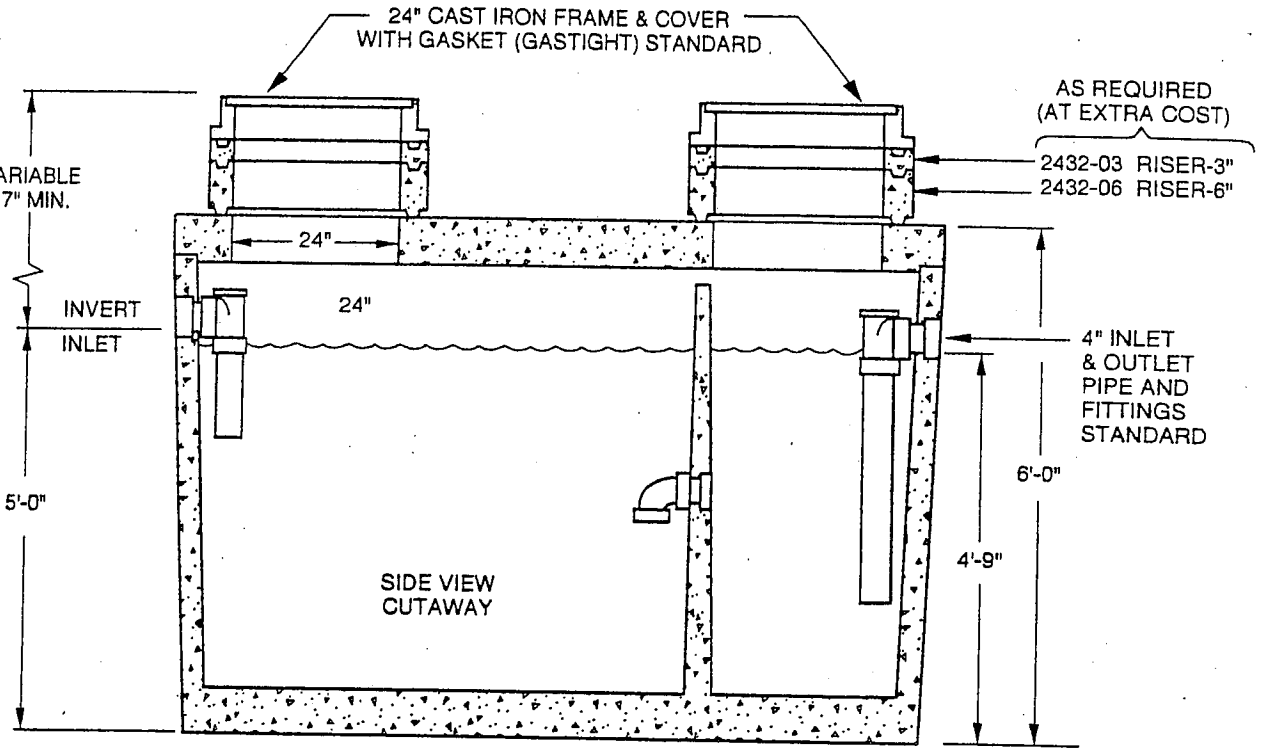

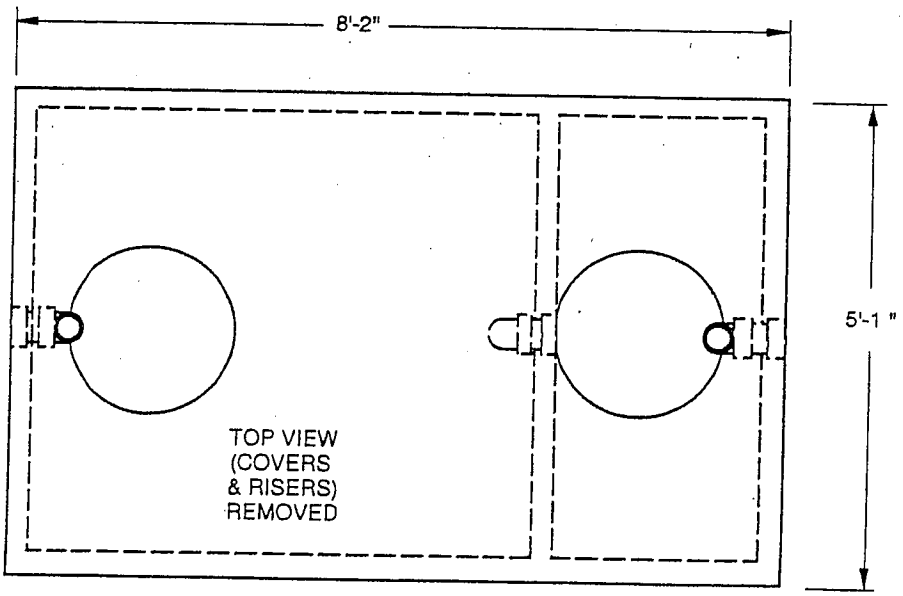

LIQUID CAPACITY: 1000 GALLONS

BOX DESIGN LOAD: H-20 TRAFFIC FROM 1' TO 6' OF COVER.
FOR COMPLETE DESIGN AND PRODUCT
INFORMATION, CONTACT JENSEN PRECAST.

10/14/93

© 1993 Jensen Precast

JENSEN PRECAST Since 1968

1500 GALLON SAND-OIL INTERCEPTOR

MODEL 1500EE

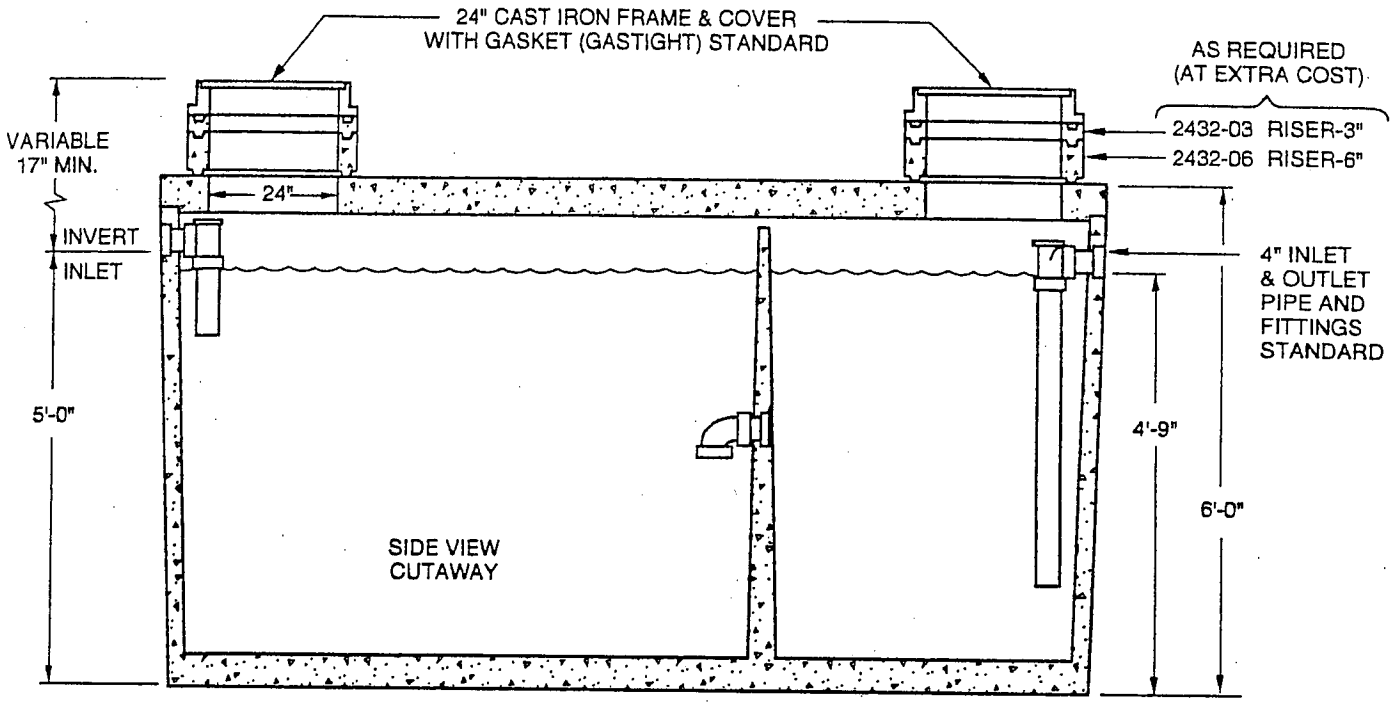

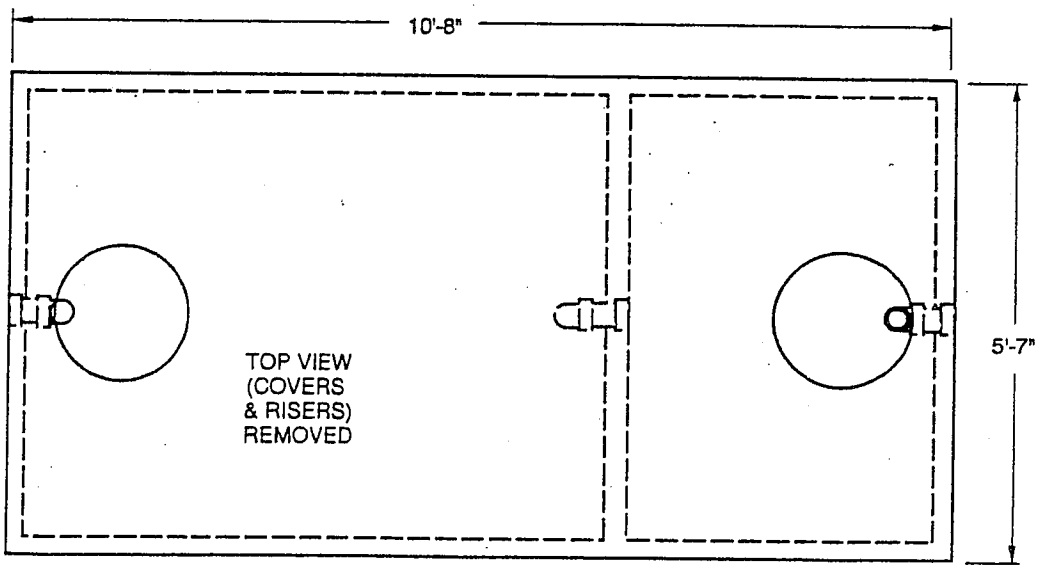

LIQUID CAPACITY: 1500 GALLONS

BOX DESIGN LOAD: H-20 TRAFFIC FROM 1' TO 6' OF COVER. FOR COMPLETE DESIGN, AND PRODUCT INFORMATION, CONTACT JENSEN PRECAST.

10/6/93

© 1993 Jensen Precast

JENSEN PRECAST Since 1968

2500 GALLON
SAND-OIL INTERCEPTOR
MODEL 2500EE

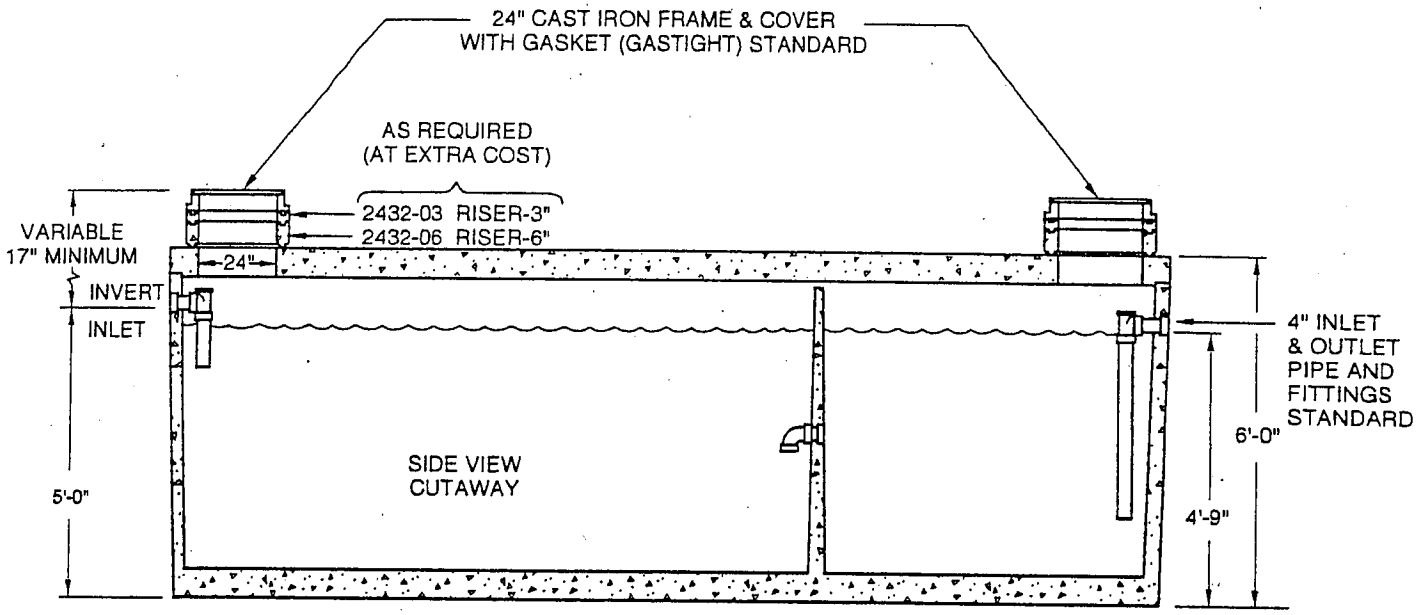

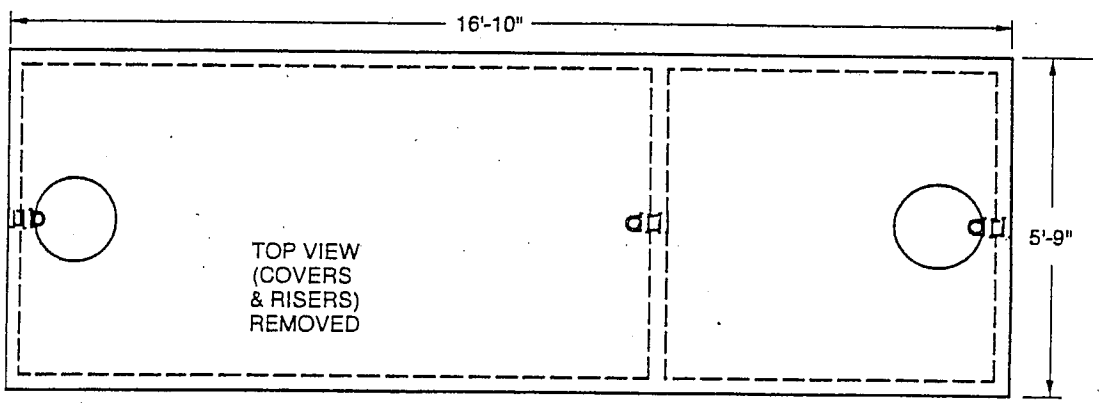

LIQUID CAPACITY: 2500 GALLONS

BOX DESIGN LOAD: H-20 TRAFFIC FROM 1' TO 5' OF COVER. FOR COMPLETE DESIGN, AND PRODUCT INFORMATION, CONTACT JENSEN PRECAST.

10/6/93

© 1993 Jensen Precast

JENSEN PRECAST Since 1968

4000 GALLON
SAND-OIL INTERCEPTOR
MODEL 4000EE

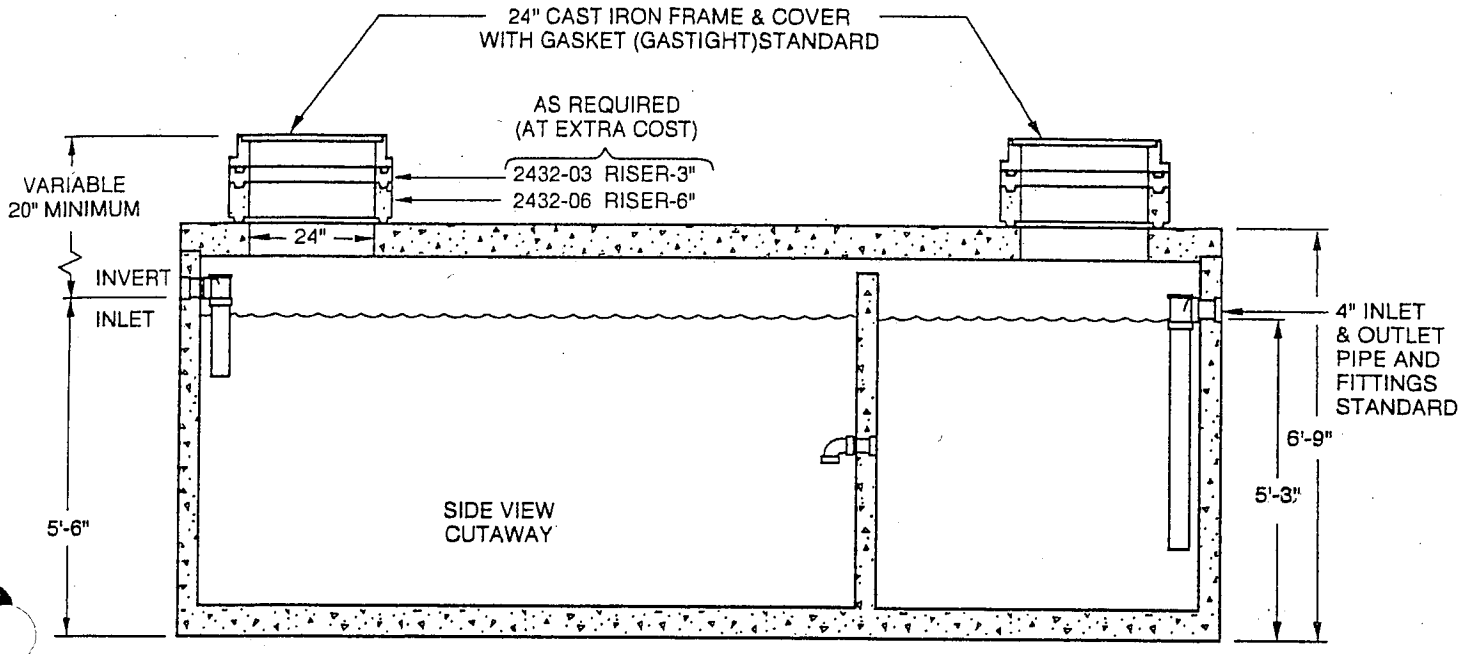

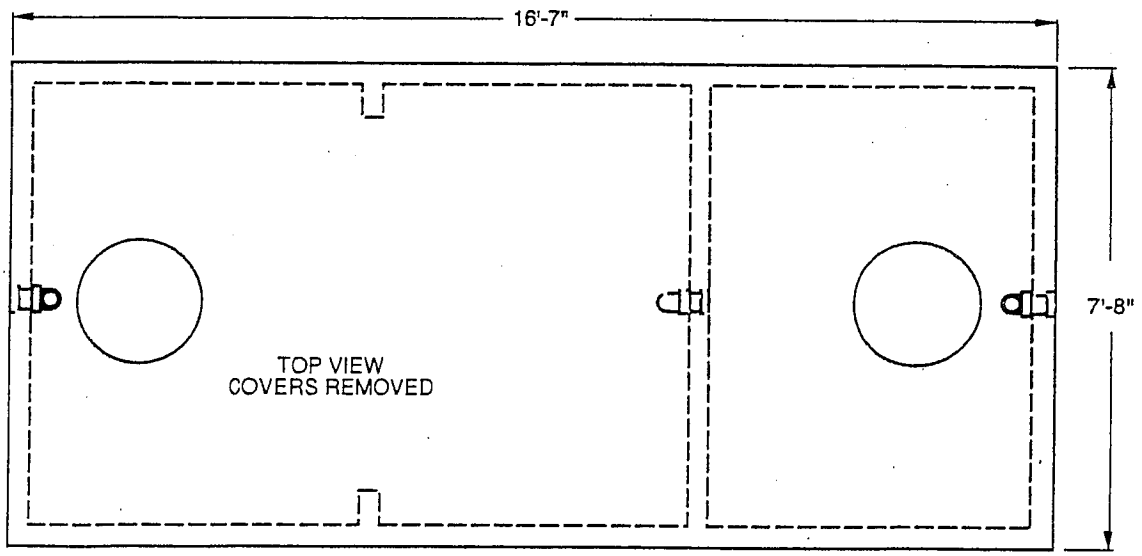

LIQUID CAPACITY: 4000 GALLONS
BOX DESIGN LOAD: H-20 TRAFFIC FROM 1' TO 5' OF COVER. FOR COMPLETE DESIGN, AND PRODUCT INFORMATION, CONTACT JENSEN PRECAST.

10/6/93

JENSEN PRECAST Since 1968

© 1993 Jensen Precast

GREASE INTERCEPTORS

Grease interceptors are used to remove excessive amounts of grease that may interfere with subsequent treatment. In certain commercial/institutional applications, grease can clog sewer lines, hinder treatment at wastewater treatment plants, or clog leach fields or inlet and outlet structures in septic tanks, resulting in restricted flows and poor septic tank performance. The purpose of a grease interceptor is simply to remove grease from the wastewater stream prior to treatment.

Grease interceptors are small flotation chambers where grease floats to the water surface and is retained while the clearer water underneath is discharged. There are no moving mechanical parts.

The grease interceptors discussed here are the large, outdoor type units, and should not be confused with the small grease traps found on some kitchen drains.

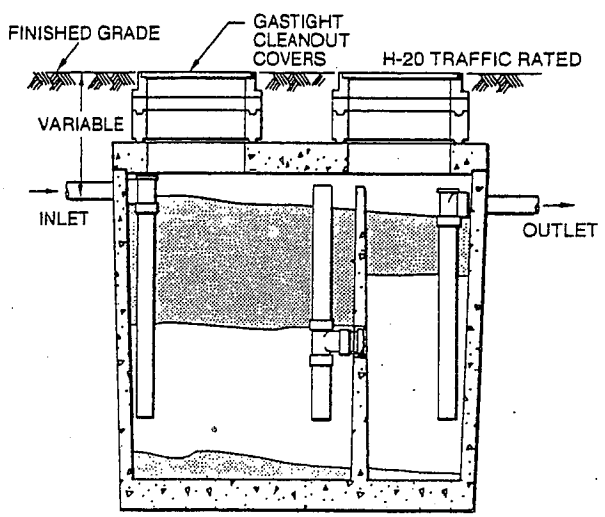

TYPICAL CROSS-SECTION - GREASE INTERCEPTOR

Grease interceptors are rarely used for individual homes. Their main application is in treating kitchen wastewater from motels, cafeterias, restaurants, hospitals, schools, and other institutions with large volumes of kitchen wastewater.

Influents to grease interceptors usually contain high organic loads, including grease, oils, fats, and dissolved food particles, as well as detergents and suspended solids. Wastewater from garbage grinders should not be discharged to grease interceptors, as the high solids loading can upset grease interceptor performance, and greatly increase both solids accumulation and the need for frequent pumpout.

SIZING

The recommended method for sizing a grease interceptor, as published in the EPA Design Manual, "Onsite Wastewater Treatment and Disposal Systems", is as follows:

1. RESTAURANTS:

$$(D) \times (GL) \times (ST) \times \left(\frac{HR}{2}\right) \times (LF) = \text{Size of Grease Interceptor, gallons}$$

where:
- D = Number of seats in dining area
- GL = Gallons of wastewater per meal, normally 5 gallons
- ST = Storage capacity factor-minimum of 1.7, onsite disposal
- HR = Number of hours open
- LF = Loading factor - 1.25 interstate freeways
  - 1.0 other freeways
  - 1.0 recreational areas
  - 0.8 main highways
  - 0.5 other highways

Thus, for a restaurant with a 75-seat dining area, an 8 hour per day operation, a typical discharge of 5 gallons per meal, a storage capacity factor of 1.7, and a loading factor of 0.8, the size of the grease interceptor is calculated as follows:

$$(75) \times (5) \times (1.7) \times \left(\frac{8}{2}\right) \times (0.8) = 2{,}040 \text{ gallons}$$

2. HOSPITALS, NURSING HOMES, OTHER TYPE COMMERCIAL KITCHENS WITH VARIED SEATING CAPACITY:

$$(M) \times (GL) \times (ST) \times (2.5) \times (LF) = \text{Size of Grease Interceptor, gallons}$$

where:
- M = Meal per day
- GL = Gallons of wastewater per meal, normally 4.5
- SC = Storage capacity factor - minimum of 1.7, onsite disposal, 2.5
- LF = Loading factor - 1.25 garbage disposal and dishwashing
  - 1.0 without garbage disposal
  - 0.75 without dishwashing and garbage disposal

A check of local ordinances and codes should always be made before the grease interceptor is purchased.

12/15/93

© 1993 Jensen Precast

JENSEN PRECAST Since 1968

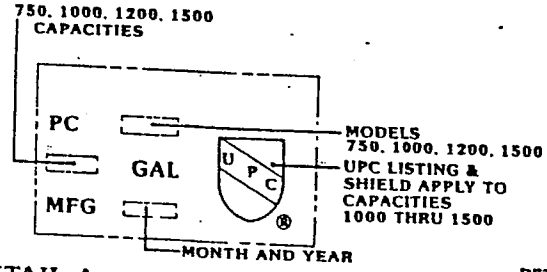

DETAIL A

H-20 TRAFFIC COVER

DETAIL B

NOTES :

FOR MATERIAL SPECIFICATIONS AND FOR GENERAL NOTES SEE SPECIFICATION SHEET NO 221

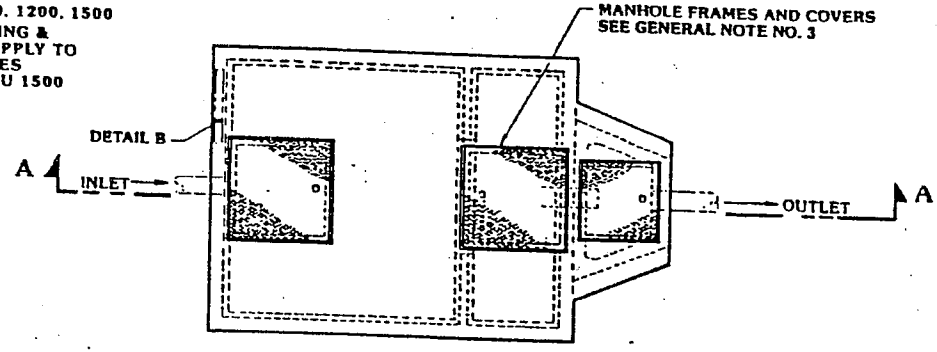

PLAN VIEW

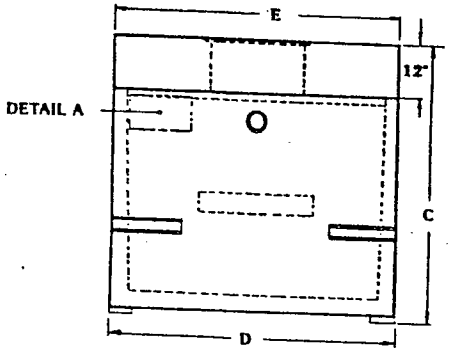

INLET END VIEW

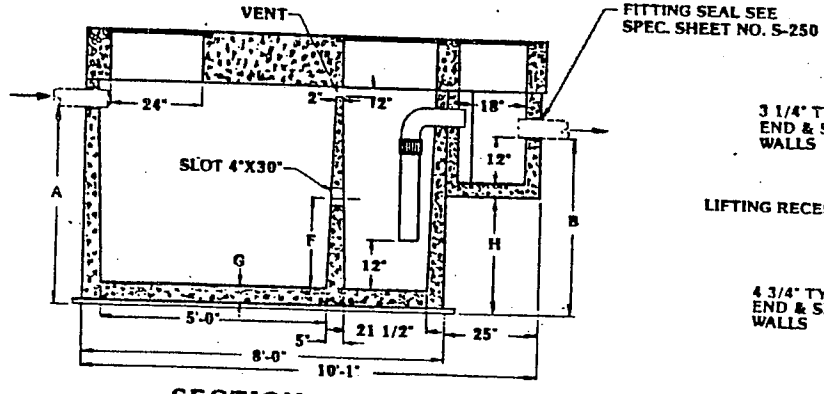

SECTION A - A

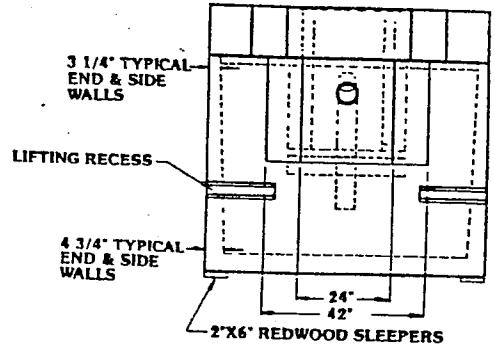

OUTLET END VIEW

ALL DIMENSIONS IN INCHES

MODEL	A	B	C	D	E	F	G	H
PC SG-750	40	38	59	74	75	19 3/4	4 1/2	31 1/2
PC SG-1000	50	48	69	74	75	24 3/4	4 1/2	41 1/2
PC SG-1200	59	57	78	74	75	29 1/4	4 1/2	50 1/2
PC SG-1500	62 1/2	60 1/2	81 1/2	85	86	30 3/4	5	53 1/2

EXCAVATION SPECIFICATIONS

MODEL	PC SG-750	PC SG-1000	PC SG-1200	PC SG-1500
LENGTH	12'-0"	12'-0"	12'-0"	12'-0"
WIDTH	8'-0"	8'-0"	8'-0"	9'-0"
BELOW INLET	3'-4"	4'-2"	6'-11"	5'-2 1/2"
TANK HEIGHT	4'-11"	5'-9"	6'-6"	6'-9 1/2"

DWG. NO. 1077
SCALE : 3/8"=1'-0"
SHEET 1 OF 1
DATE : 7 / 15 / 87
DRAWN BY
CHKD BY

TWO COMPARTMENT
SAND AND GREASE INTERCEPTOR
WITH SAMPLE BOX
DESIGNED FOR DIRECT H-20
VEHICLE LOADING
750 THRU 1500 GALLON

M.C. NOTTINGHAM CO., INC.
P.O. Box 3037 - 2926 W First St
Santa Ana, CA 92703
(714) 953-6700

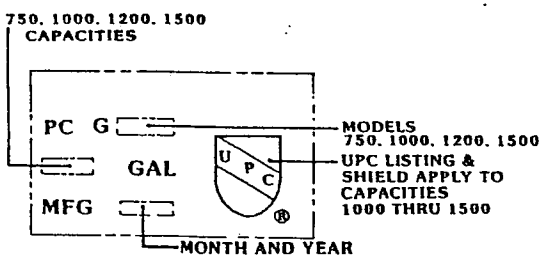

DETAIL A

H 20 TRAFFIC COVER

DETAIL B

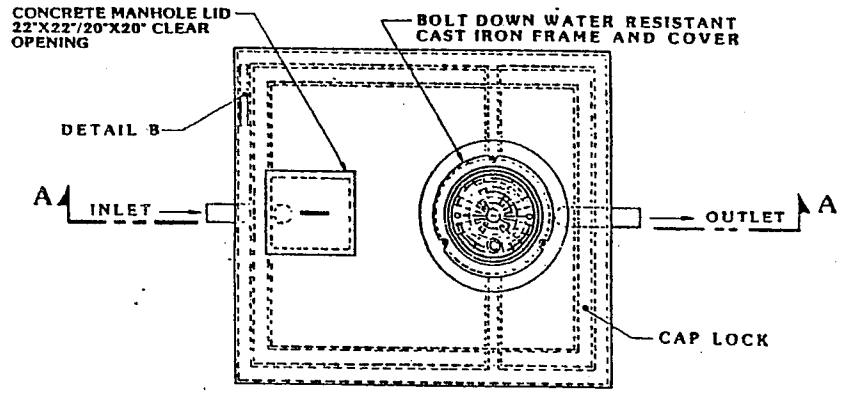

PLAN VIEW

NOTES :

1. INSTALLATION DESIGNED FOR DIRECT H-20 LOADING OF MANHOLE EXTENSION
2. FOR MATERIAL SPECIFICATIONS AND FOR GENERAL NOTES SEE SPECIFICATION SHEET NO. S 211

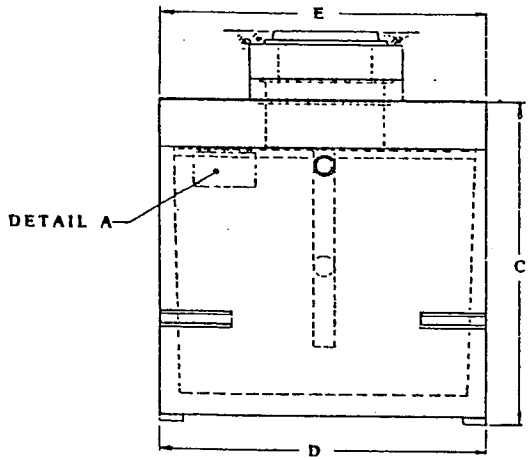

INLET

END VIEW

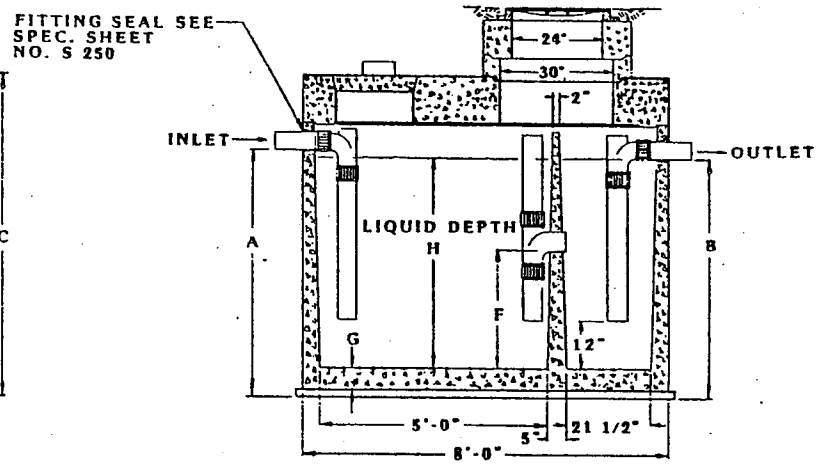

SECTION A - A

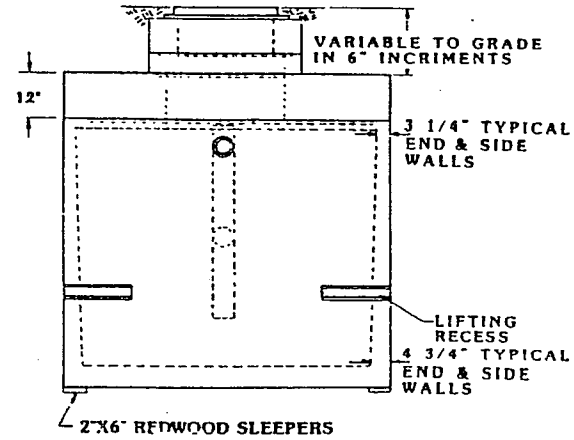

OUTLET

END VIEW

ALL DIMENSIONS IN INCHES

MODEL	A	B	C	D	E	F	G	H
PC G-750	40	38	59	74	74	19 3/4	4 1/2	31 1/2
PC G-1000	50	18	69	74	74	24 3/4	4 1/2	41 1/2
PC G-1200	59	57	78	74	74	29 1/4	4 1/2	50 1/2
PC G-1500	62 1/2	60 1/2	81 1/2	85	85	30 3/4	5	53 1/2

EXCAVATION SPECIFICATIONS

MODEL	PC G-750	PC G-1000	PC G-1200	PC G-1500
LENGTH	9'-0"	9'-0"	9'-0"	9'-0"
WIDTH	8'-0"	8'-0"	8'-0"	9'-0"
BELOW INLET	3'-4"	4'-2"	4'-11"	5'-2 1/2"
TANK HEIGHT	4'-11"	5'-9"	6'-6"	6'-9 1/2"

DWG. NO. 1041

SCALE : 3/8"=1'-0"

SHEET 1 OF 1

DATE : 7 / 15 / 87

DRAWN BY

CHKD BY

GREASE INTERCEPTOR
MANHOLE EXTENDED TO GRADE
DESIGNED FOR DIRECT H-20 LOADING OF THE MANHOLE

750 THRU 1500 GALLONS

M.C. NOTTINGHAM CO., INC
P.O. Box 3037 - 2926 W First St
Santa Ana, CA 92703
(714). 953-6700

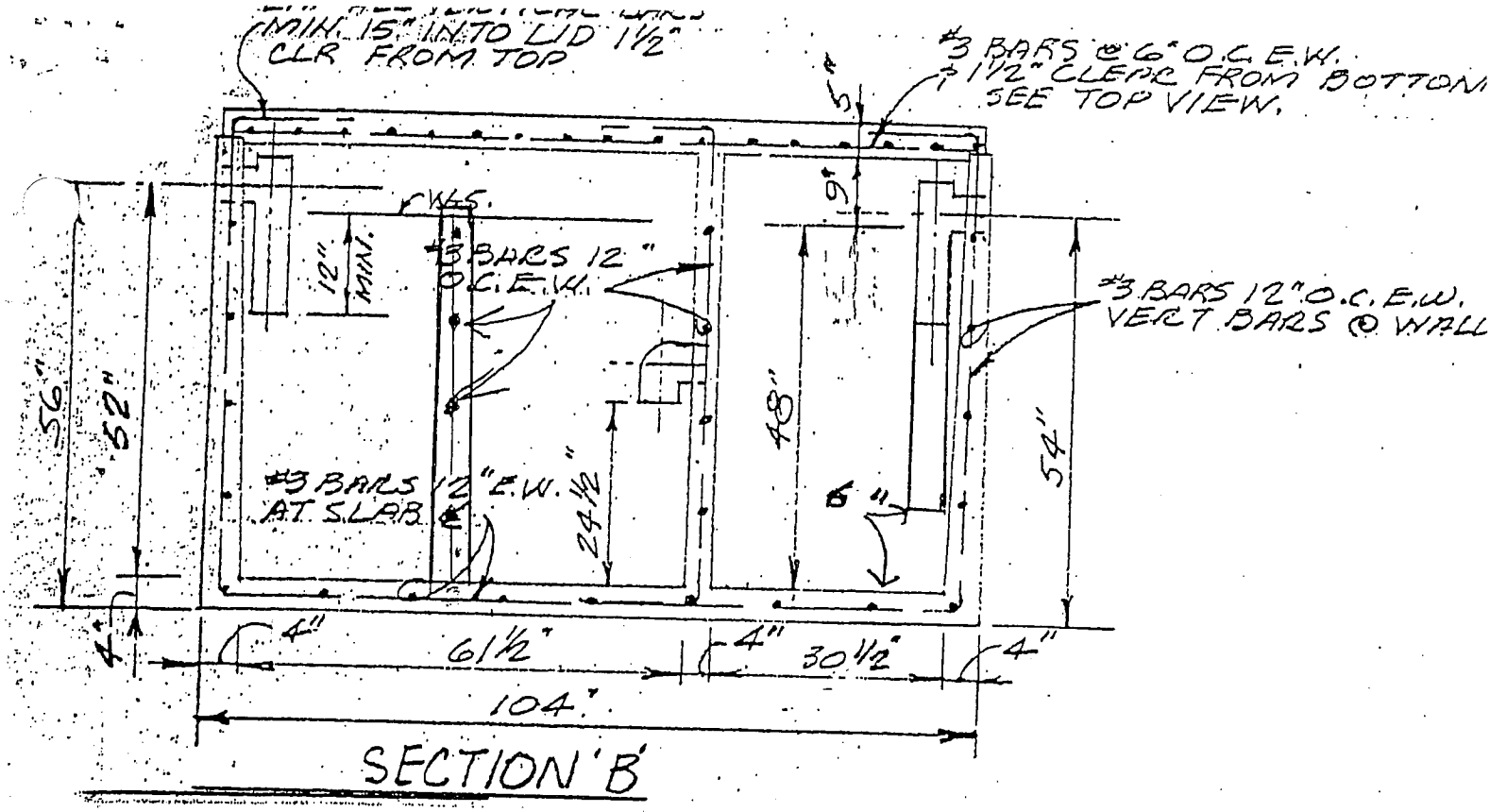

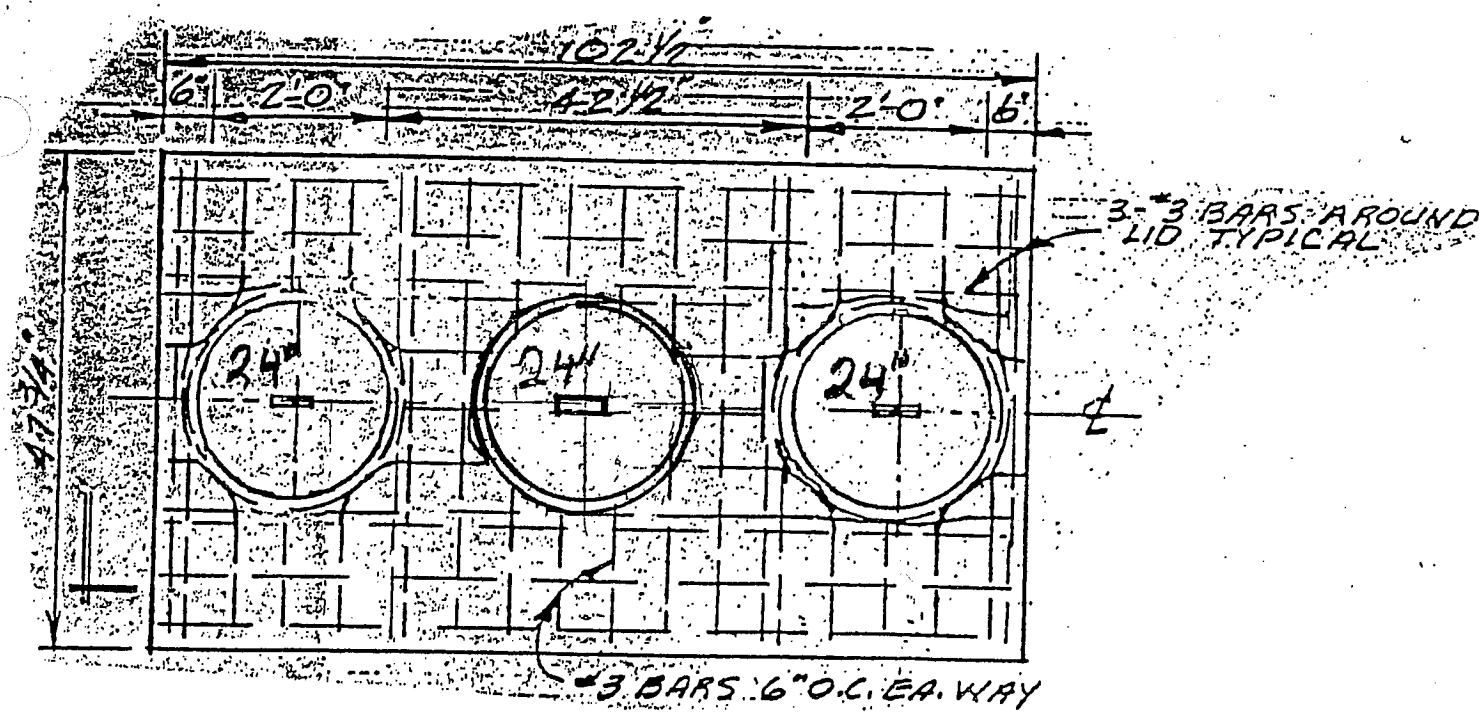

SELVAGE CONCRETE PRODUCTS, INC
3309 SEBASTOPOL ROAD
SANTA ROSA
PHONE (707) 542-2762

810 GALLONS

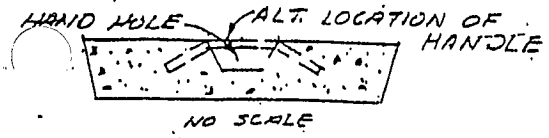

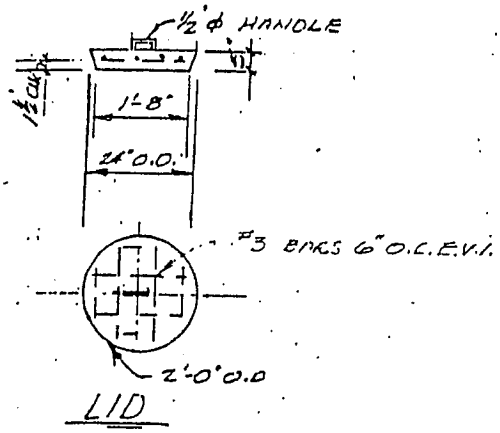

LID

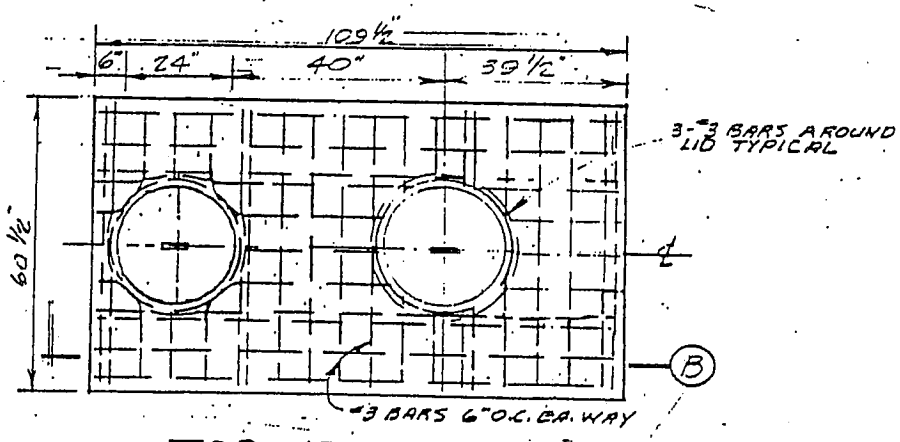

TOP VIEW SHOWING REINFORCING
NOT TO SCALE

REGISTERED PROFESSIONAL ENGINEER
CLYDE A. BLODGETT
No. 9753
Exp. 12-31-92
CIVIL
STATE OF CALIFORNIA

NOTES:

1. All concrete shall develop a minimum compressive strength at 28 days of 3000 psi.
2. Design stress of concrete f'c 3000 psi.
3. Cement to be Portland conforming to ASTM C 150.
4. Reinforcing steel shall be intermediate grade, deformed, conforming to ASTM A-616 Grade 40.
5. Reinforcing bars shall be in as long lengths as practicable and shall be lapped a minimum of 15 inches, or 40 bar diameters.
6. Welded wire fabric shall conform to ASTM designation A 185. Lap fabric at at slices a minimum of 6".
7. All tanks shall be coated on the interior extending to a minimum of four (4) inches below the water line, and shall cover all of the internal area above that point with an approved waterproof bituminous compound complying with AS D 41-78, Asphalt Primer Used in Damproofing and Waterproofing and ASTM D 449-73, Type A, Asphalt Used in Damproofing and Waterproofing or ASTM D 2823-75, Type I for Asphalt Roof Coatings and shall be applied per the manufacturer's recommendation.
8. Tanks shall bear on undisturbed soil a minimum o 18" below original grade on a solid bed and to b installed level.
9. Soil bearing capacity shall be a minimum of 1000 psf.
10. Fill tank with water after it has been set in place and the sides backfilled.
11. Do not construct in a traffic area.
12. The design for this tank is based on an equivale fluid pressure of 30 p.c.f.
13. Capacity= (101.[illegible])(54.33)(50.5)$\frac{1}{231}$ = 1200 GA DIMENSIONALLY CONFIRMED.

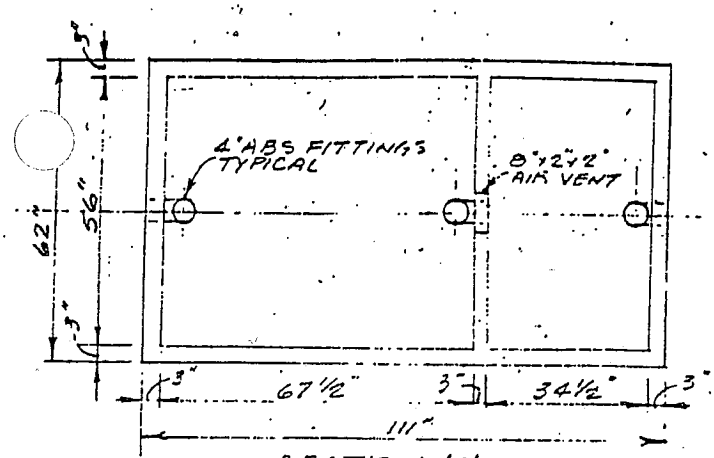

SECTION 'A'

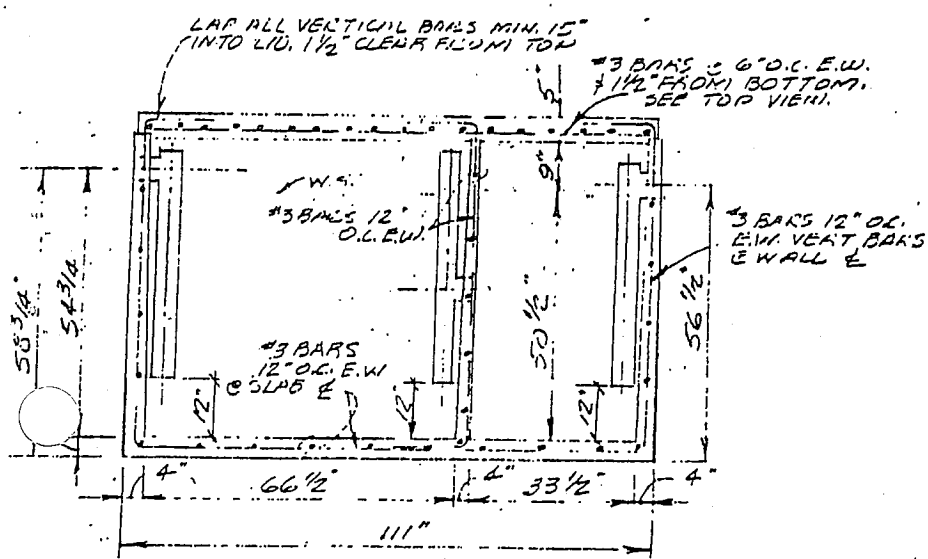

SECTION 'B'

SELVAGE CONCRETE PRODUCTS, INC
3309 SEBASTOPOL ROAD
SANTA ROSA
PHONE (707) 542-2762

GATHISE TRAP 1200 GALLONS

CLYDE A. BLODGETT
CIVIL ENGINEER
899 GRAVENSTEIN HWY. SO., SEBASTOPOL
PHONE (707) 823-6114

DWN: CAB	
JOB NO. 880902	DATE: JUNE 28, 1990
SCALE: 1/2" = 1'-0"	SHEET GT-1200

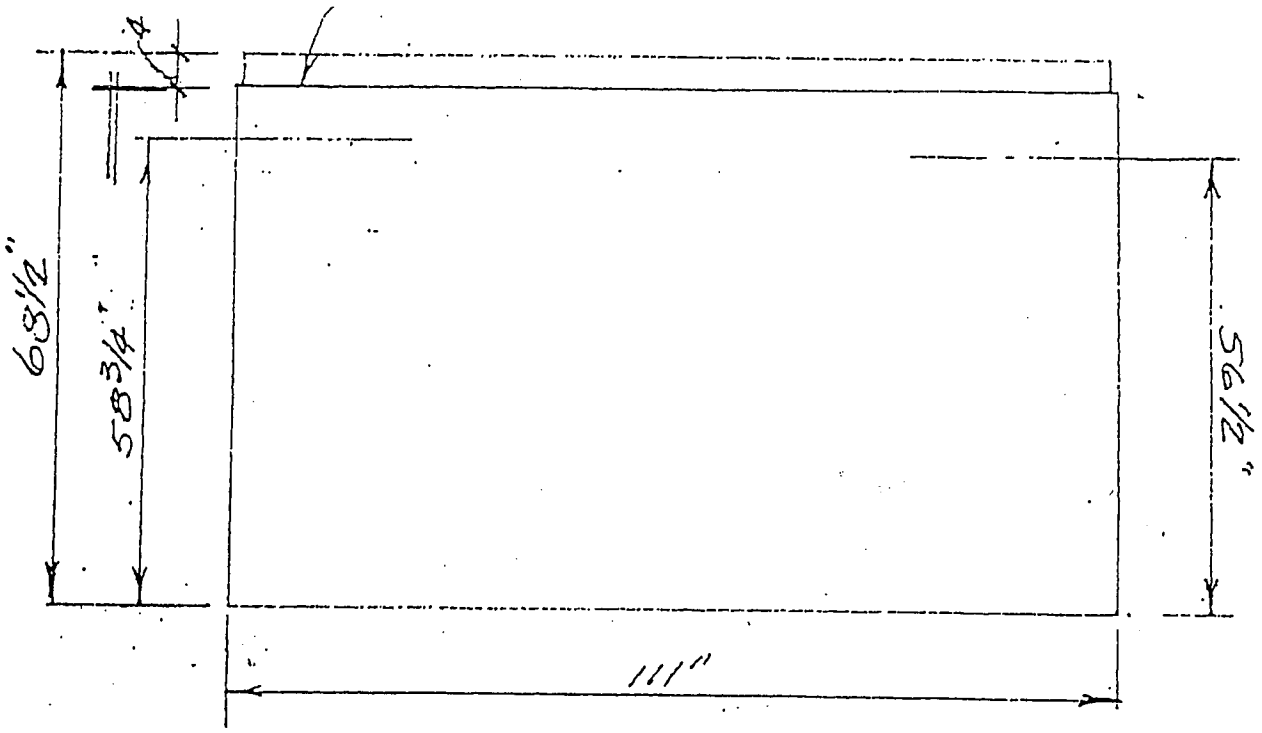

SIDE ELEV.

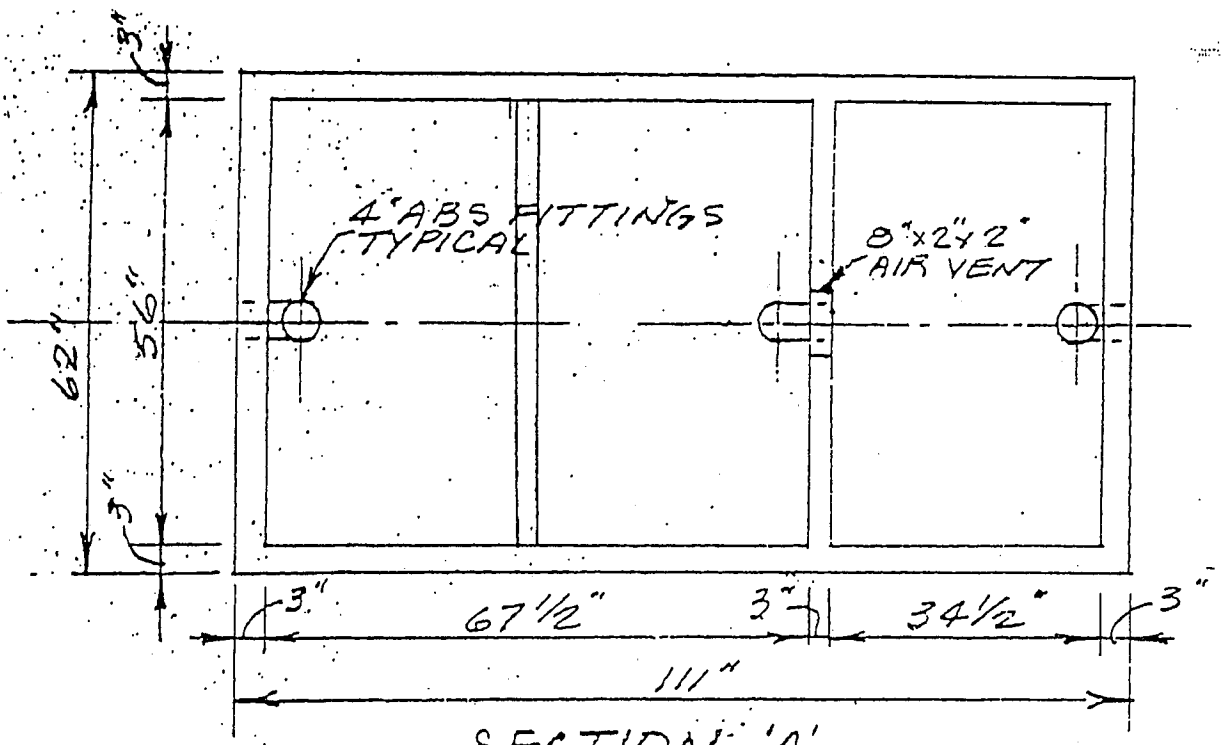

SECTION 'A'

SELVAGE CONCRETE PRODUCTS, INC
3309 SEBASTOPOL ROAD
SANTA ROSA
PHONE (707) 542-2762

1200 GALLONS

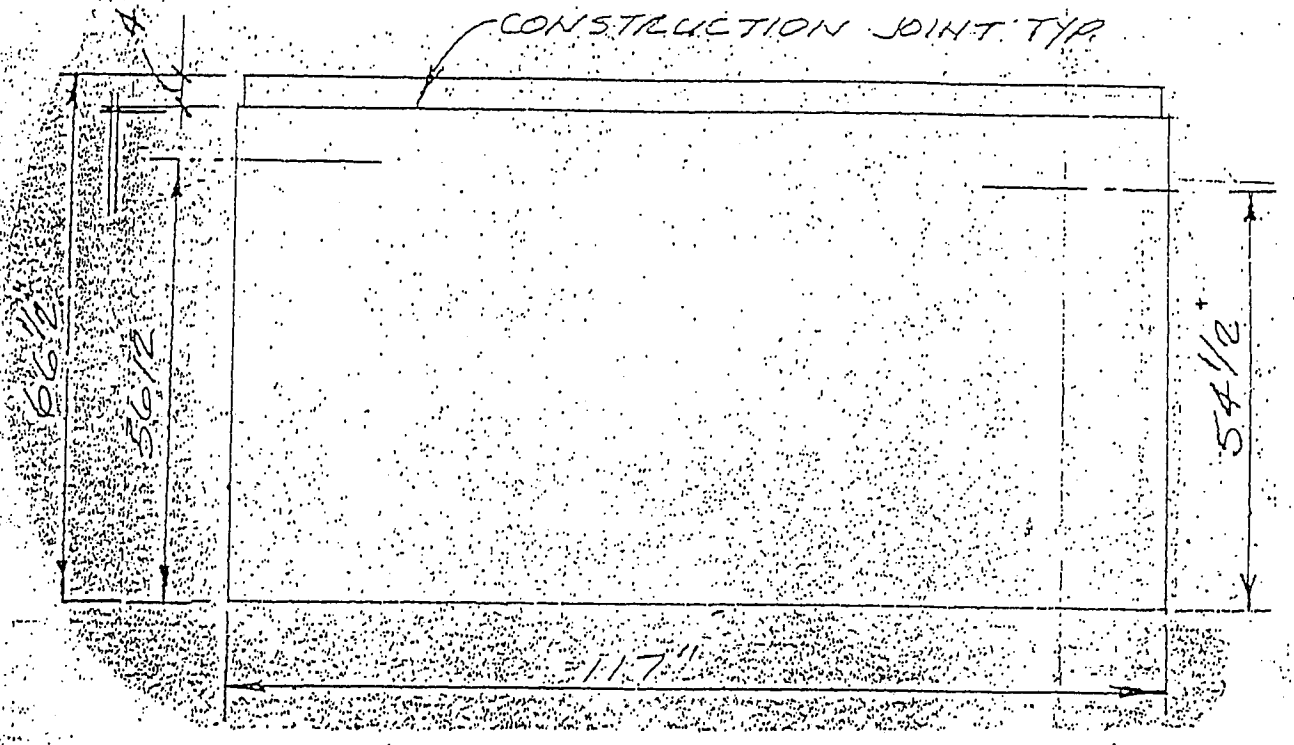

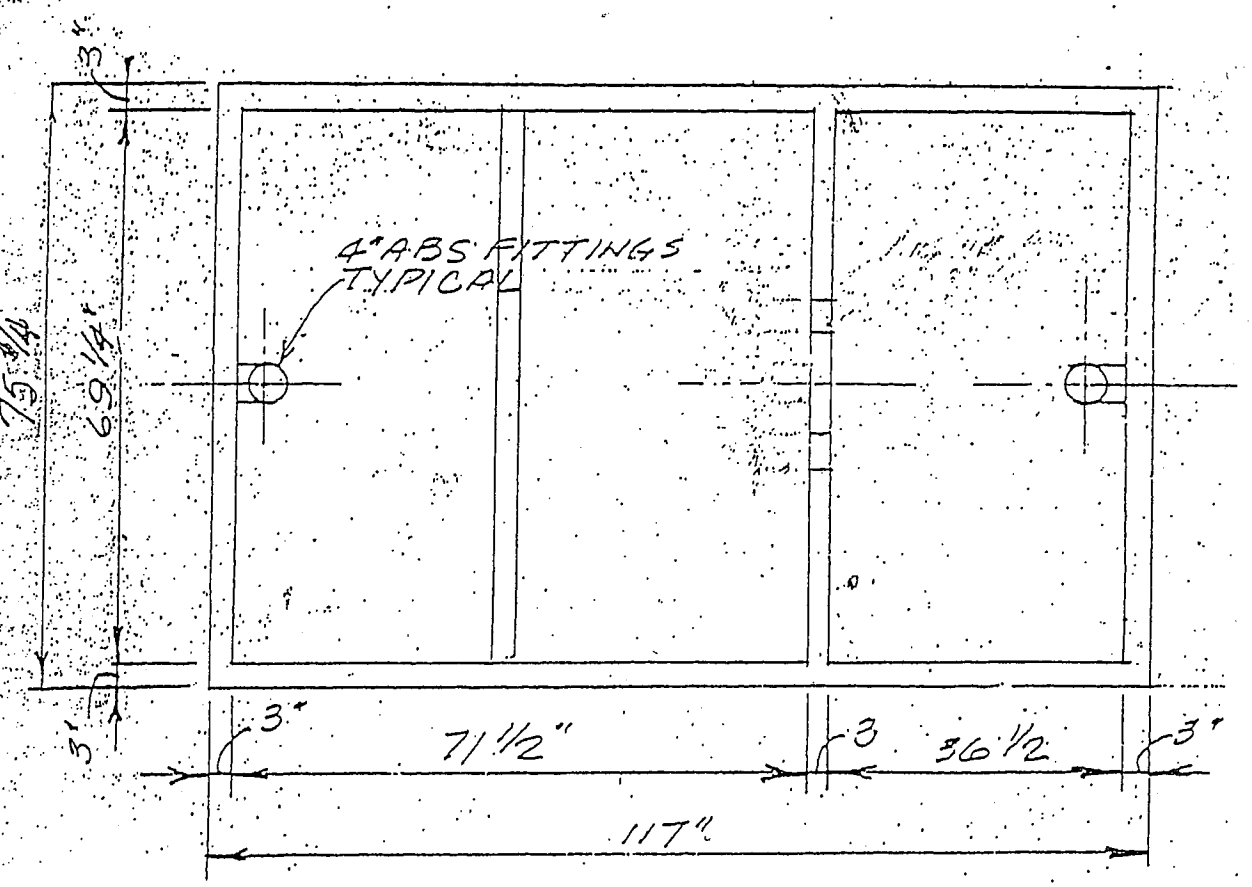

SELVAGE CONCRETE PRODUCTS, INC
3309 SEBASTOPOL ROAD
SANTA ROSA
PHONE (707) 542-2762

1500 gallon
Sand & Grease Interceptor

COMMERCIAL DISTRIBUTION BOX

MODEL D-30

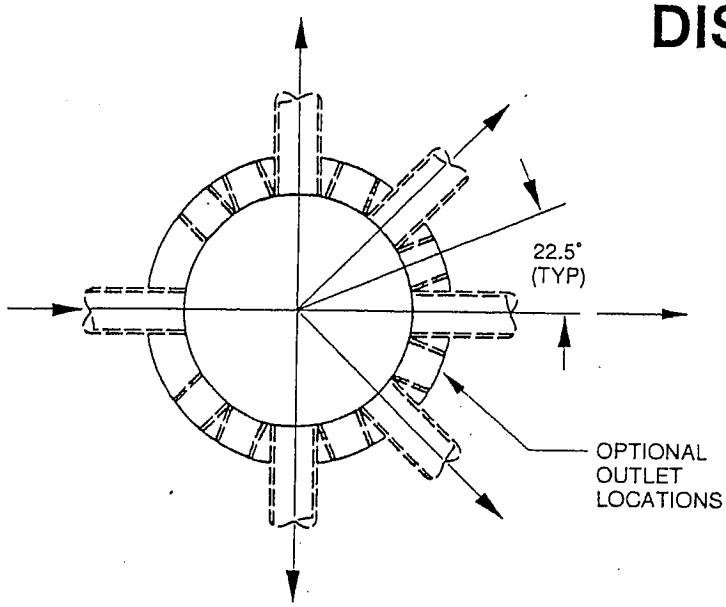

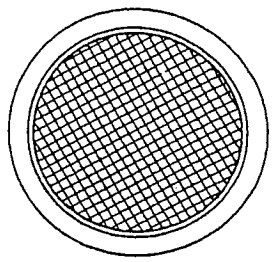

24" GASTIGHT MANHOLES,
CAST IRON FRAME AND COVER
USE REDUCER D30–24C

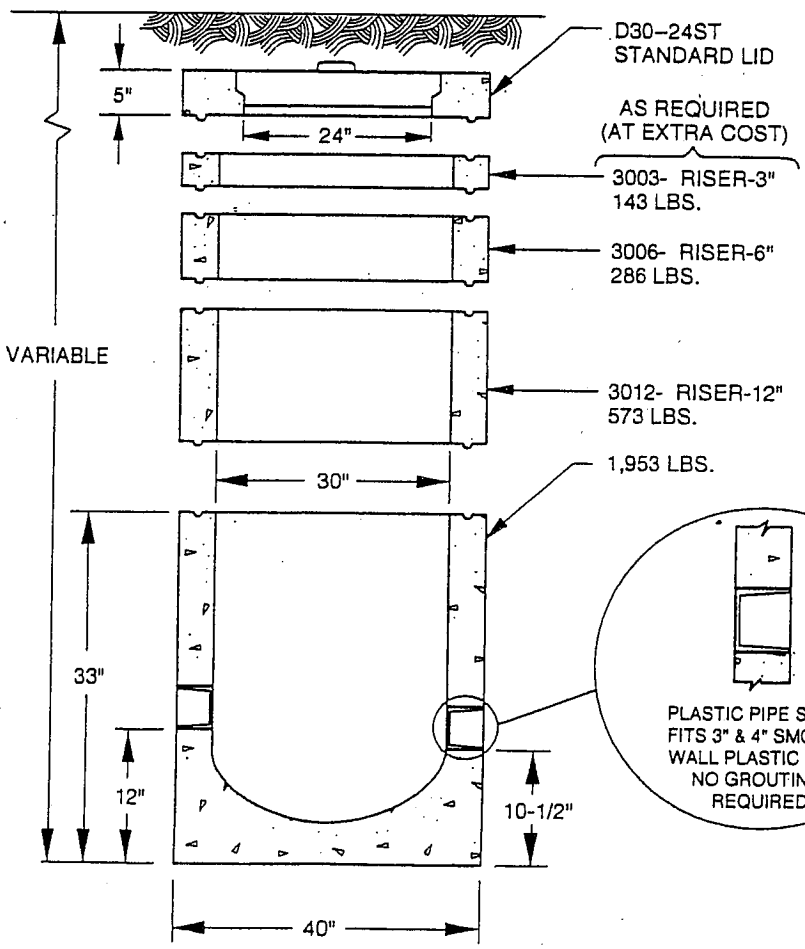

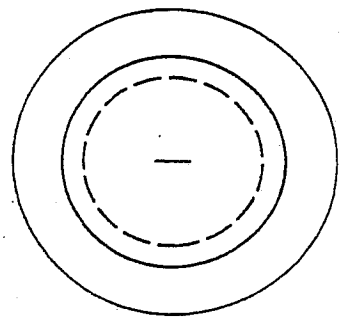

D30-24ST STANDARD
COVER AND LID
SOLID CONCRETE

DESIGN LOAD: H-20
CONFORMS TO A.S.T.M. C-478

FOR COMPLETE DESIGN
INFORMATION, CONSULT
JENSEN PRECAST.

3/92

© 1992 Jensen Precast

JENSEN PRECAST Since 1968

Title: CUSTOM PRECAST CONCRETE DROP INLETS	Date: MARCH, 1987	Dwg. No. DI
	Rev: 8-16-94	Page No. I-I

Santa Rosa Cast Products Company 471 WEST COLLEGE AVE. • SANTA ROSA, CA 95401 • (707) 546-5016

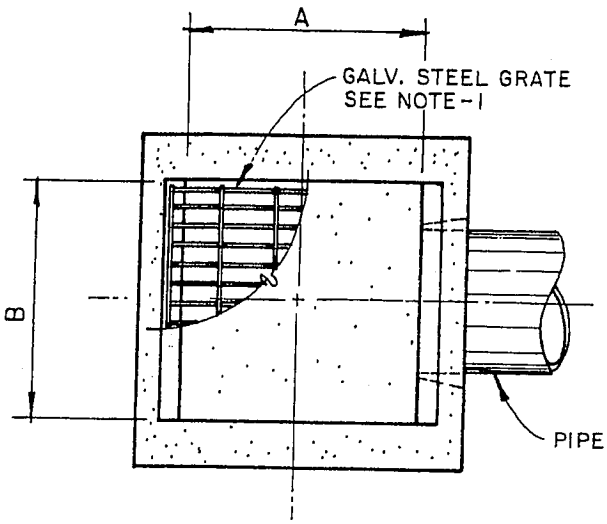

PLAN

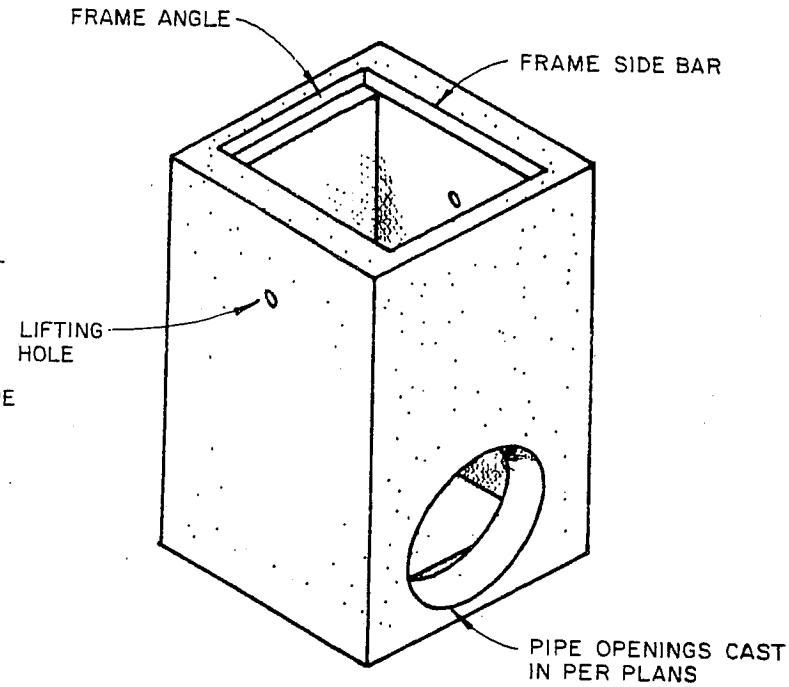

ISOMETRIC

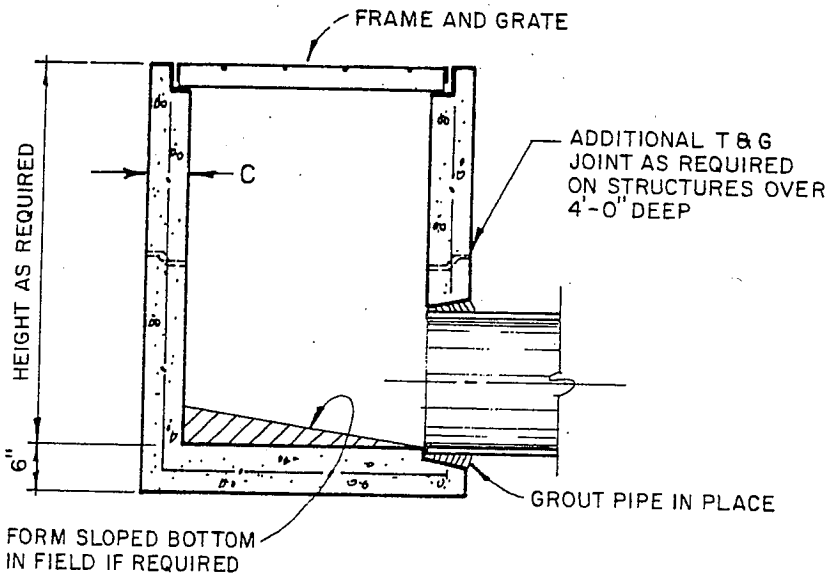

DROP INLET TABLE

MODEL	A	B	C
EK	12	12	4
BK	16	16	5
CK	18	18	4
1K	16	24	5
2K	24	24	5
3K	24	30	5
5K	30	30	6
1L	24	36	6
1M	36	36	6
3L	24	48	6
3M	36	48	6
1R	48	48	6

DIMENSIONS ARE IN INCHES

NOTES

1. FRAMES AND GRATES MAY BE SPECIFIED FOR PEDESTRIAN OR H20 TRAFFIC LOADING. ALL GRATES ARE BICYCLE PROOF. OPTIONAL GRATE LOCKING DEVICE AVAILABLE ON REQUEST, SEE DRAWING "LOCK" ON PAGE 1-5. CLOSE MESH GRATES OR CAST IRON FRAME AND GRATES ARE AVAILABLE ON REQUEST.
2. FOR SURFACE AND DISCHARGE OPTIONS AVAILABLE SEE DRAWING NO. "DI-SO" PAGE 1-3 AND "DI-DO" PAGE 1-4.
3. FOR FRAME AND GRATE DETAILS SEE PAGES 1-6, 1-7, 1-8, AND 1-9.

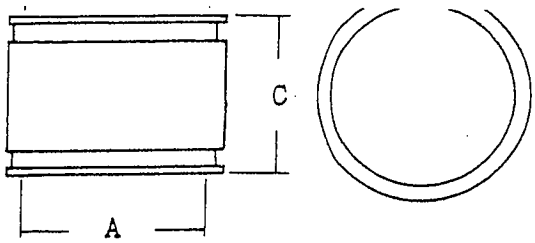

FERNCO SI

ALL DIMENSIONS GIVEN IN INCHES. #305 STA

Clay TO Clay

SERIES 1001 Designed for clay to clay, but will connect two pipes within ±5% OD on chart.

Part No.	A	B	C
1001-44	5.25	5.25	4
1001-54	6.12	5.25	6
1001-55	6.12	6.12	5
1001-64	7.38	5.25	6
*1001-65	7.38	6.12	6
1001-66	7.52	7.52	6
1001-86	9.65	7.38	6
1001-88	9.65	9.65	6
*1001-10-8	12.73	9.65	6
1001-1010	12.73	12.73	6
*1001-1210	14.38	12.73	6
1001-1212	14.38	14.38	6
*1001-1512	17.85	14.38	6
1001-1515	17.85	17.85	6

*Supplied with reducer

Clay TO Cast Iron Or Plastic

SERIES 1002 Designed for clay to cast iron or plastic, but will connect any two pipes within ±5% OD on chart.

Part No.	A	B	C
1002-43	5.25	3.38	4
1002-44	5.25	4.38	4
1002-46	5.25	6.38	6
1002-54	6.12	4.38	6
1002-55	6.12	5.38	5
1002-64	7.38	4.38	6
1002-65	7.38	5.38	6
1002-66	7.38	6.38	6
1002-86	9.65	6.38	6
1002-88	9.65	8.50	6
*1002-10-8	12.73	8.50	6
1002-1010	12.73	10.60	6
*1002-1210	14.38	10.60	6
1002-1212	14.38	12.60	6
*1002-1512	17.85	12.60	6
1002-1515	17.85	15.40	6

*Supplied with reducer

Clay TO Asbestos Cement Or Ductile Iron

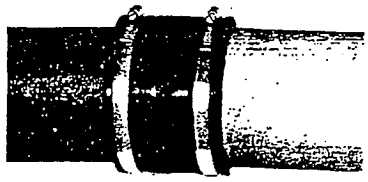

SERIES 1003 Designed for clay to asbestos cement or ductile iron, but will connect any two pipes within ±5% OD on chart.

Part No.	A	B	C
1003-44	5.00	4.75	4
*1003-54	6.12	4.75	5
1003-55	6.12	5.90	5
*1003-64	7.38	4.75	6
*1003-65	7.38	5.90	6
1003-66	7.38	7.00	6
*1003-85	9.65	7.00	6
*1003-86	9.65	7.00	6
1003-88	9.65	9.12	6
*1003-10-8	12.73	9.12	6
*1003-1010	12.73	11.12	6
*1003-1210	14.38	11.12	6
1003-1212	14.38	13.20	6
*1003-1512	17.85	13.20	6

*Supplied with reducer

Concrete TO Concrete

SERIES 1004 Designed f concrete to concrete, but v connect any two pipes witl ±5% OD on chart.

Part No.	A	B
1004-44	5.62	5.[illegible]
*1004-64	7.80	5.b[illegible]
1004-66	7.80	7.80
*1004-86	10.25	7.80
1004-88	10.25	10.25
1004-99	USE PART NUMBER 1001-1010	
*1004-10-8	12.73	10.25
1004-1010	12.73	12.73
1004-1210	15.40	12.73
1004-1212	15.40	15.40

*Supplied with reducer

FORM FC 988

FERNCO FLEXIBLE COUPLINGS

Couplings

INDIANA SEAL™

Products for the Piping Industry

Indiana Seal Couplings provide the quality you demand, and the variety you need. They are precision-designed to assure an uninterrupted flow through a diverse range of piping materials and sizes, and are built to the same exacting specifications. For dependability and ease of installation, always specify Couplings by Indiana Seal.

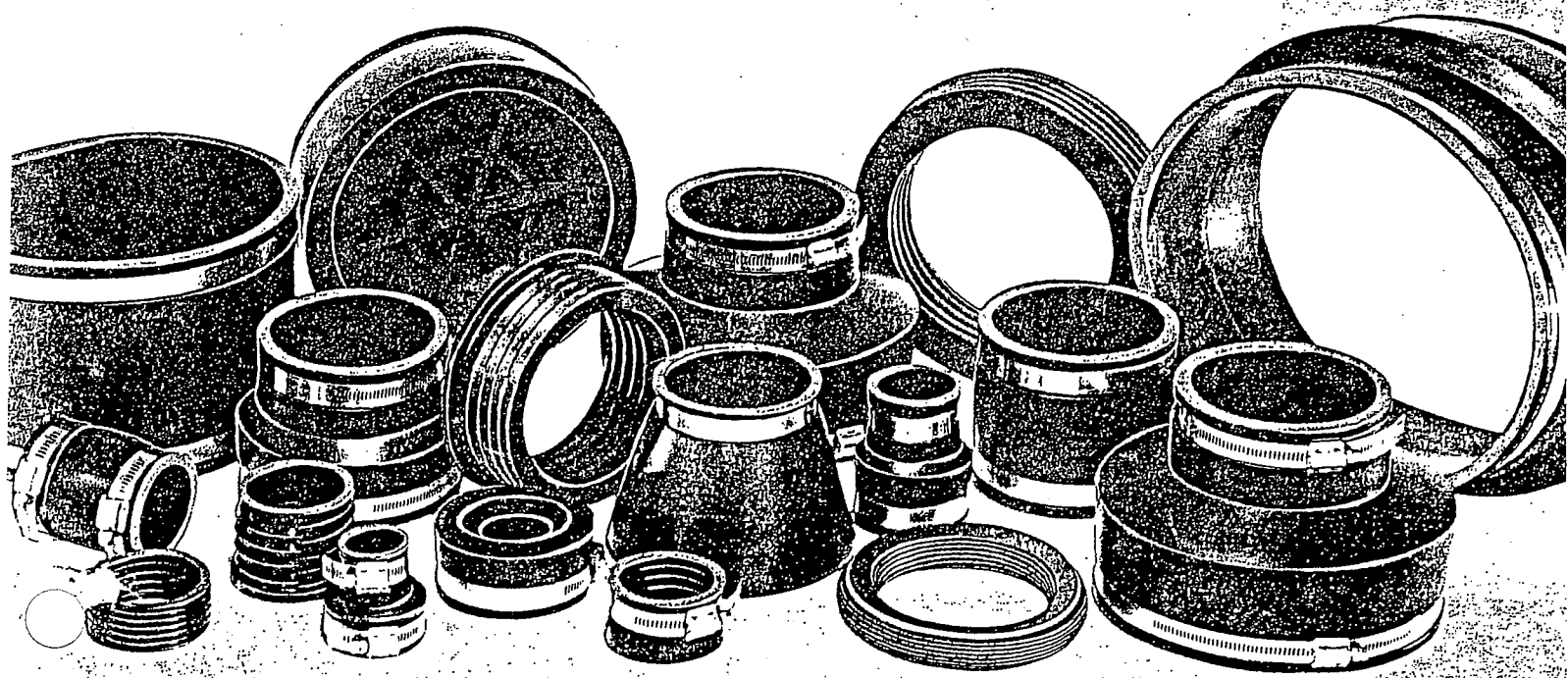

101/Clay to Clay

Part #	Pipe Size	A	B	C
101-44	4x4	5.30	5.30	4.00
*101-54	5x4	6.40	5.30	6.00
101-55	5x5	6.40	6.40	6.00
101-64	6x4	7.50	5.30	6.00
101-66	6x6	7.50	7.50	6.00
*101-85	8x5	9.75	6.40	6.00
101-86	8x6	9.75	7.50	6.00
101-88	8x8	9.75	9.75	6.00
101-1010	10x10	11.95	11.95	6.50
101-1212	12x12	14.50	14.50	6.50
101-1515	15x15	18.25	18.25	7.00
101-1818	18x18	21.50	21.50	7.00

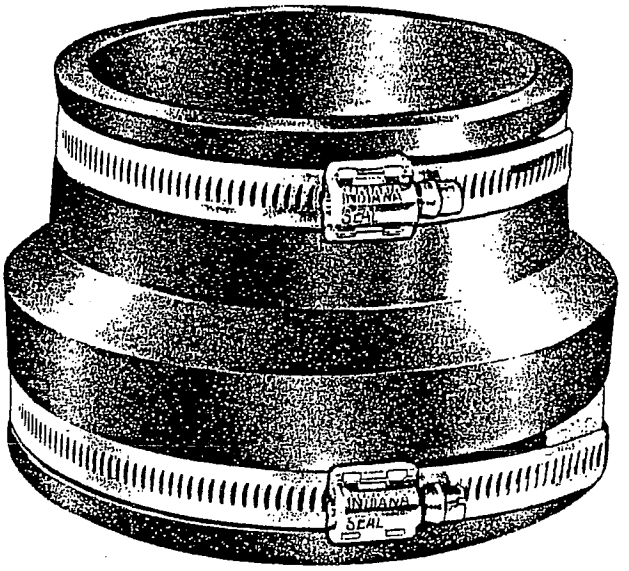

102/Clay to Cast Iron or Plastic

Part #	Pipe Size	A	B	C
102-43	4x3	5.30	3.40	4.00
102-44	4x4	5.30	4.40	4.00
102-46	4x6	5.30	6.40	6.00
*102-53	5x3	6.40	3.40	6.00
*102-54	5x4	6.40	4.40	6.00
*102-55	5x5	6.40	5.50	6.00
*102-56	5x6	6.40	6.40	6.00
*102-63	6x3	7.50	3.40	6.00
102-64	6x4	7.50	4.40	6.00
102-65	6x5	7.50	5.50	6.00
102-66	6x6	7.50	6.40	6.00
*102-68	6x8	7.50	8.55	6.00
102-86	8x6	9.75	6.40	6.00
102-88	8x8	9.75	8.55	6.00
102-108	10x8	11.95	8.55	6.50
102-1010	10x10	11.95	10.60	6.50
102-1210	12x10	14.50	10.60	6.50
102-1212	12x12	14.50	12.60	6.50
102-1512	15x12	18.25	12.60	7.00
102-1515	15x15	18.25	15.30	7.00
102-1815	18x15	21.50	15.30	9.00
102-1818	18x18	21.50	18.70	9.00

*Supplied with reducer.

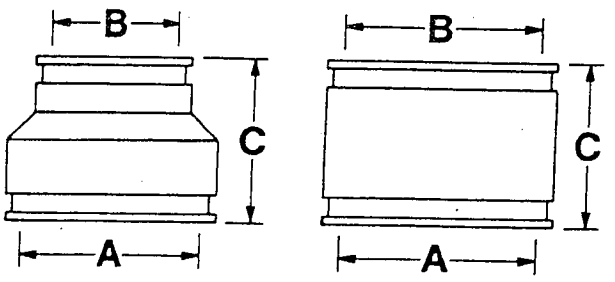

107/ Concrete to Clay

Part #	Pipe Size	A	B	C
107-44	4x4	5.62	5.30	4.00
107-64	6x4	7.80	5.30	6.00
107-66	6x6	7.80	7.50	6.00
107-86	8x6	10.25	7.50	6.00
107-88	8x8	10.25	9.75	6.00

151/ Asbestos Cement or Ductile Iron to Cast Iron or Plastic

Part #	Pipe Size	A	B	C
*151-43	4x3	4.75	3.40	4.00
151-44	4x4	4.75	4.40	4.00
*151-53	5x3	5.90	3.40	5.00
151-54	5x4	5.90	4.40	5.00
*151-63	6x3	7.00	3.40	6.00
151-64	6x4	7.00	4.40	6.00
151-65	6x5	7.00	5.50	6.00
151-66	6x6	7.00	6.40	6.00
151-86	8x6	9.12	6.40	6.00
151-88	8x8	9.12	8.55	6.00
151-1010	10x10	11.12	10.60	6.50
151-1212	12x12	13.20	12.60	6.50
151-1615	16x15	17.40	15.30	7.00
151-1818	18x18	19.50	18.70	9.00

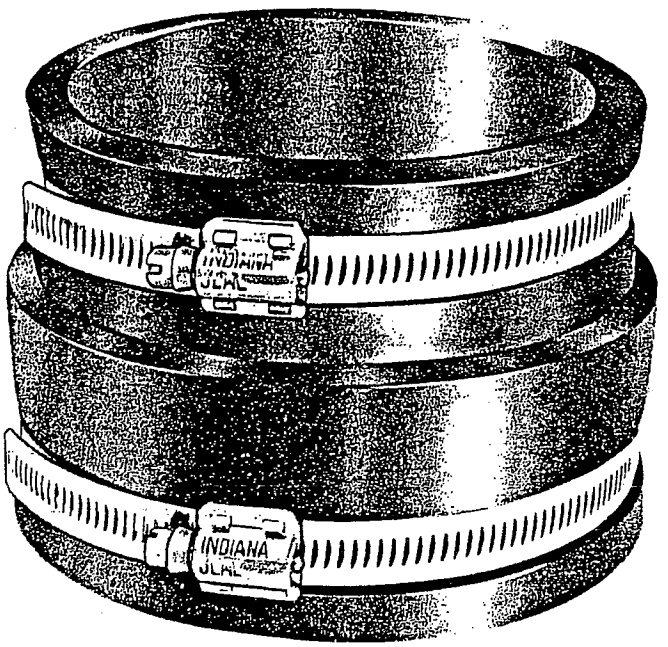

155/ Asbestos Cement or Ductile Iron to Asbestos Cement or Ductile Iron

Part #	Pipe Size	A	B	C
155-44	4x4	4.75	4.75	4.00
155-64	6x4	7.00	4.75	6.00
155-66	6x6	7.00	7.00	6.00
155-86	8x6	9.12	7.00	6.00
155-88	8x8	9.12	9.12	6.00
155-1010	10x10	11.12	11.12	6.50
155-1212	12x12	13.20	13.20	6.50

*Supplied with reducer.

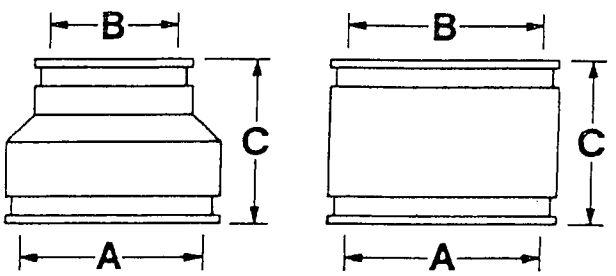

102/Clay to Armco Truss

Part #	Pipe Size	A	B	C
102-44	4x4	5.30	4.40	4.00
102-64	6x4	7.50	4.40	6.00
102-66	6x6	7.50	6.40	6.00
102-86	8x6	9.75	6.40	6.00
101-88	8x8	9.75	9.75	6.00
101-1010	10x10	11.95	11.95	6.50
101-1212	12x12	14.50	14.50	6.50
101-1515	15x15	18.25	18.25	7.00

106/Concrete to Armco Truss

Part #	Pipe Size	A	B	C
106-44	4x4	5.62	4.40	4.00
106-64	6x4	7.80	4.40	6.00
106-66	6x6	7.80	6.40	6.00
106-86	8x6	10.25	6.40	6.00
107-88	8x8	10.25	9.75	6.00

156/Armco Truss to Armco Truss

Part #	Pipe Size	A	B	C
156-44	4x4	4.40	4.40	4.00
156-64	6x4	6.40	4.40	6.00
156-66	6x6	6.40	6.40	6.00
102-86	8x6	9.75	6.40	6.00
101-88	8x8	9.75	9.75	6.00
101-1010	10x10	11.95	11.95	6.50
101-1212	12x12	14.50	14.50	6.50
101-1515	15x15	18.25	18.25	7.00

156/Armco Truss to Cast Iron or Plastic

Part #	Pipe Size	A	B	C
156-44	4x4	4.40	4.40	4.00
156-64	6x4	6.40	4.40	6.00
156-66	6x6	6.40	6.40	6.00
102-86	8x6	9.75	6.40	6.00
102-88	8x8	9.75	8.55	6.00
102-108	10x8	11.95	8.55	6.50
102-1010	10x10	11.95	10.60	6.50
102-1212	12x12	14.50	12.60	6.50
102-1512	15x12	18.25	12.60	7.00
102-1515	15x15	18.25	15.30	7.00

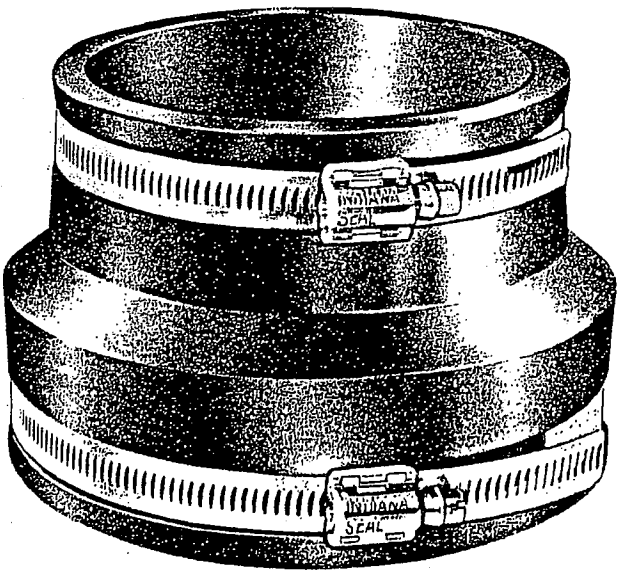

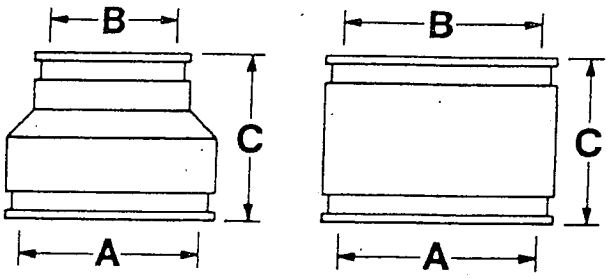

Series 300 Stainless Steel Hose Clamps

Indiana Seal Series 300 Stainless Steel Hose Clamps are constructed of premium grade stainless steel throughout, including housing and screw. The band is a burr-less, one-piece unit, with high quality finish. Deeply-pitched grooves in interlocked housing insure a positive seal. Available in sizes ranging from 1 1/16" through 21".

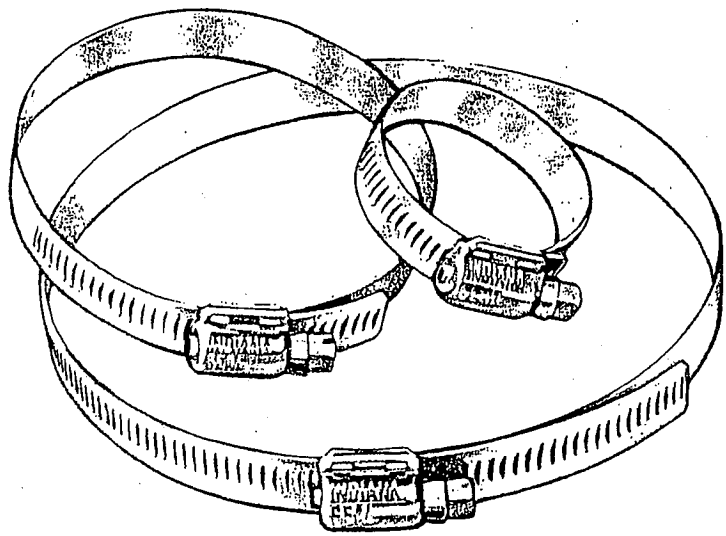

Stainless Steel Hose Clamps

Part Number	Fits	Min. Dia. in.	Min. Dia. mm.	Max. Dia. in.	Max. Dia. mm.
SSHC24	1 1/4" or 1 1/2" tubing	1 1/16"	27.0	2"	50.8
SSHC28	1 1/4" plastic/cast iron	1 5/16"	33.3	2 1/4"	57.2
SSHC32	1 1/2" I.P.S., 1 1/2" plastic/cast iron, 1 1/2" seal cap	1 9/16"	39.9	2 1/2"	63.5
SSHC36	2" I.P.S.	1 13/16"	46.0	2 1/4"	69.9
SSHC40	2" seal cap	2 1/16"	52.4	3"	76.2
SSHC44	2" plastic/cast iron	2 5/16"	58.7	3 1/4"	82.6
SSHC56	3" seal cap	3 1/16"	77.8	4"	101.6
SSHC64	3" plastic/cast iron	3 9/16"	90.4	4 1/2"	114.3
SSHC72	4" seal cap	4 1/16"	103.2	5"	127.0
SSHC80	4" plastic/cast iron	4 5/8"	117.5	5 1/2"	139.7
SSHC88	4" asbestos cement/ductile iron	5 1/8"	130.2	6"	152.4
SSHC96	4" concrete, 4" clay, 5" plastic/cast iron, 5" seal cap	5 9/16"	141.3	6 1/2"	165.1
SSHC104	6" seal cap	6 1/8"	155.6	7 1/4"	177.8
SSHC112	5" clay, 6" plastic/cast iron	6 5/8"	168.3	7 1/2"	190.5
SSHC120	6" asbestos cement/ductile iron	7 1/8"	181.0	8"	203.2
SSHC128	6" clay	7 3/8"	193.7	8 1/2"	215.9
SSHC132	6" clay, 6" concrete	7 7/8"	200.0	8 3/4"	222.3
SSHC144	8" seal cap	8 3/8"	219.0	9 1/2"	240.0
SSHC152	8" plastic/cast iron, 8" seal cap	9 1/8"	231.8	10"	254.0
SSHC160	8" asbestos cement/ductile iron	9 5/8"	244.5	10 1/2"	266.7
SSHC174	8" clay, 8" concrete	10 5/8"	266.7	11 3/8"	288.9
SSHC186	10" plastic/cast iron	11 1/4"	285.7	12 1/8"	311.2
SSHC190	10" asbestos cement/ductile iron	11 1/2"	292.1	12 3/8"	314.3
SSHC208	10" clay	12 5/8"	320.7	13 1/2"	342.9
SSHC220	10" concrete, 12" plastic/cast iron	13 3/8"	339.7	14 1/4"	362.0
SSHC232	12" asbestos cement/ductile iron	14 1/8"	358.8	15"	381.0
SSHC248	12" clay	15 1/8"	384.2	16"	406.4
SSHC252	12" concrete	15 3/8"	390.5	16 1/4"	419.1
SSHC260	15" plastic/cast iron	15 7/8"	403.2	16 3/4"	425.5
SSHC300	16" asbestos cement/ductile iron	18 3/8"	466.8	19 1/4"	489.0
SSHC312	15" clay, 18" plastic/cast iron	19 1/8"	485.8	20"	508.0
SSHC328	18" asbestos cement/ductile iron	20 1/8"	511.2	21"	533.4

Additional band sizes available—please call 1-800-428-5309, or in Indiana, 1-800-382-5497 for additional information.

DIMENSIONAL SPECIFICATIONS & SIZING INFORMATION

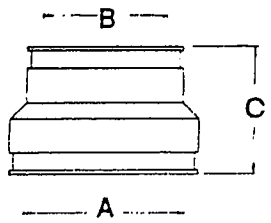

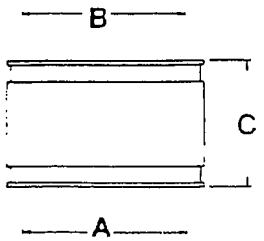

CLAY TO CLAY — 01 SERIES

PIPE SIZE	PRODUCT #	A MIN. O.D.	A MAX. O.D.	B MIN. O.D.	B MAX. O.D.	C WIDTH	PIPE SIZE	PRODUCT #	A MIN. O.D.	A MAX. O.D.	B MIN. O.D.	B MAX. O.D.	C WIDTH
4 x 4	MR01 44*	5.00	5.40	5.00	5.40	4.0	8 x 8	MR01 88*	9.40	10.00	9.40	10.00	6.0
6 x 4	MR01 64	7.20	7.80	5.00	5.40	6.0	10 x 10	MR01 1010*	11.85	12.45	11.85	12.45	6.0
6 x 4	MR01 64"O"	7.50	8.12	5.00	5.40	6.0	12 x 12	MR01 1212*	14.20	14.80	14.20	14.80	6.0
6 x 6	MR01 66*	7.20	7.80	7.20	7.80	6.0							

CLAY TO CAST IRON OR PLASTIC — 02 SERIES

4 x 3	MR02 43	5.00	5.40	3.25	3.50	4.0	6 x 6	MR02 66	7.20	7.80	6.27	6.62	6.0
4 x 4	MR02 44	5.00	5.40	4.21	4.50	4.0	8 x 6	MR02 86	9.40	10.00	6.27	6.62	6.0
4 x 6	MR02 46	5.00	5.40	6.27	6.62	6.0	8 x 8	MR02 88*	9.40	10.00	8.25	8.62	6.0
5 x 5	MR02 55	6.03	6.40	5.25	5.62	5.0	10 x 10	MR02 1010	11.85	12.45	10.20	10.80	6.5
6 x 4	MR02 64	7.20	7.80	4.21	4.50	6.0	12 x 12	MR02 1212	14.20	14.80	12.20	12.80	6.5
6 x 5	MR02 65	7.20	7.80	5.00	5.40	6.0							

CLAY TO ASBESTOS CEMENT OR DUCTILE IRON — 03 SERIES

4 x 3	MR03 44	5.00	5.40	4.62	4.93	4.0	10 x 10	MR03 1010	11.85	12.45	10.70	11.20	6.5
6 x 6	MR03 66	7.20	7.80	6.75	7.12	6.0	12 x 12	MR03 1212	14.20	14.80	12.75	13.30	6.5
8 x 8	MR03 88	9.40	10.00	8.75	9.25	6.0							

CONCRETE TO CONCRETE — 04 SERIES

4 x 4	MR04 44*	5.50	6.00	5.50	6.00	4.0	6 x 6	MR04 66*	7.50	8.12	7.50	8.12	6.0
6 x 4	MR04 64	7.50	8.12	5.50	6.00	6.0	8 x 8	MR04 88*	10.00	10.50	10.00	10.50	6.0

CONCRETE TO CAST IRON OR PLASTIC — 06 SERIES

4 x 4	MR06 44	5.50	6.00	4.21	4.50	4.0	6 x 6	MR06 66	7.50	8.12	6.25	6.62	6.0
6 x 4	MR06 64	7.50	8.12	4.21	4.50	6.0	8 x 8	MR06 88	10.00	10.50	8.12	8.75	6.0
6 x 5	MR06 65	7.50	8.12	5.00	5.40	6.0							

ASBESTOS CEMENT OR DUCTILE IRON TO CAST IRON OR PLASTIC — 51 SERIES

4 x 4	MR51 44	4.62	4.93	4.21	4.50	4.0	6 x 6	MR51 66*	6.75	7.12	6.25	6.62	6.0
6 x 4	MR51 64	6.75	7.12	4.21	4.50	6.0	8 x 8	MR51 88*	8.75	9.25	8.25	8.62	6.0

*ADJUSTABLE REPAIR COUPLING AVAILABLE (300 SERIES STAINLESS STEEL SHEAR RING.)

Pipe joining data above is based on the best information available at the time of publication. If it is outdated or inaccurate we are sorry. It should be used GUIDE only. When questions or problems arise please call — we will try to help solve them. In order to help we would need to know the O.D. of the pipes to be joined preferably measured circumferentially.

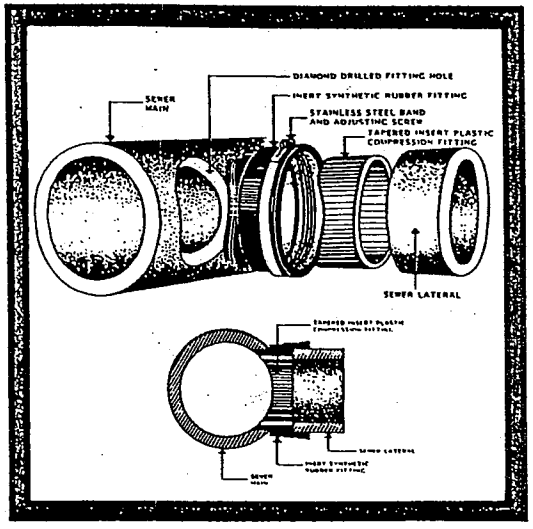

Right now there are many thousands of Tap-Tite installations operating — efficiently, reliably, and trouble-free.

The Tap-Tite name has been used in California and aligned with quality for more than a decade.

tap-tite

Introducing a patented sewer fitting with proven success in the underground pipeline industry . . .

tap-tite

tap-tite COMPANY

MICHAEL

STAN JUPP — (510) 524-9694

SEALTITE TYPE "E" WYE SEWER PIPE SADDLE

CONTOURS AVAILABLE FOR 6" I.D. THRU 26" O.D. GRAVITY SEWER PIPES

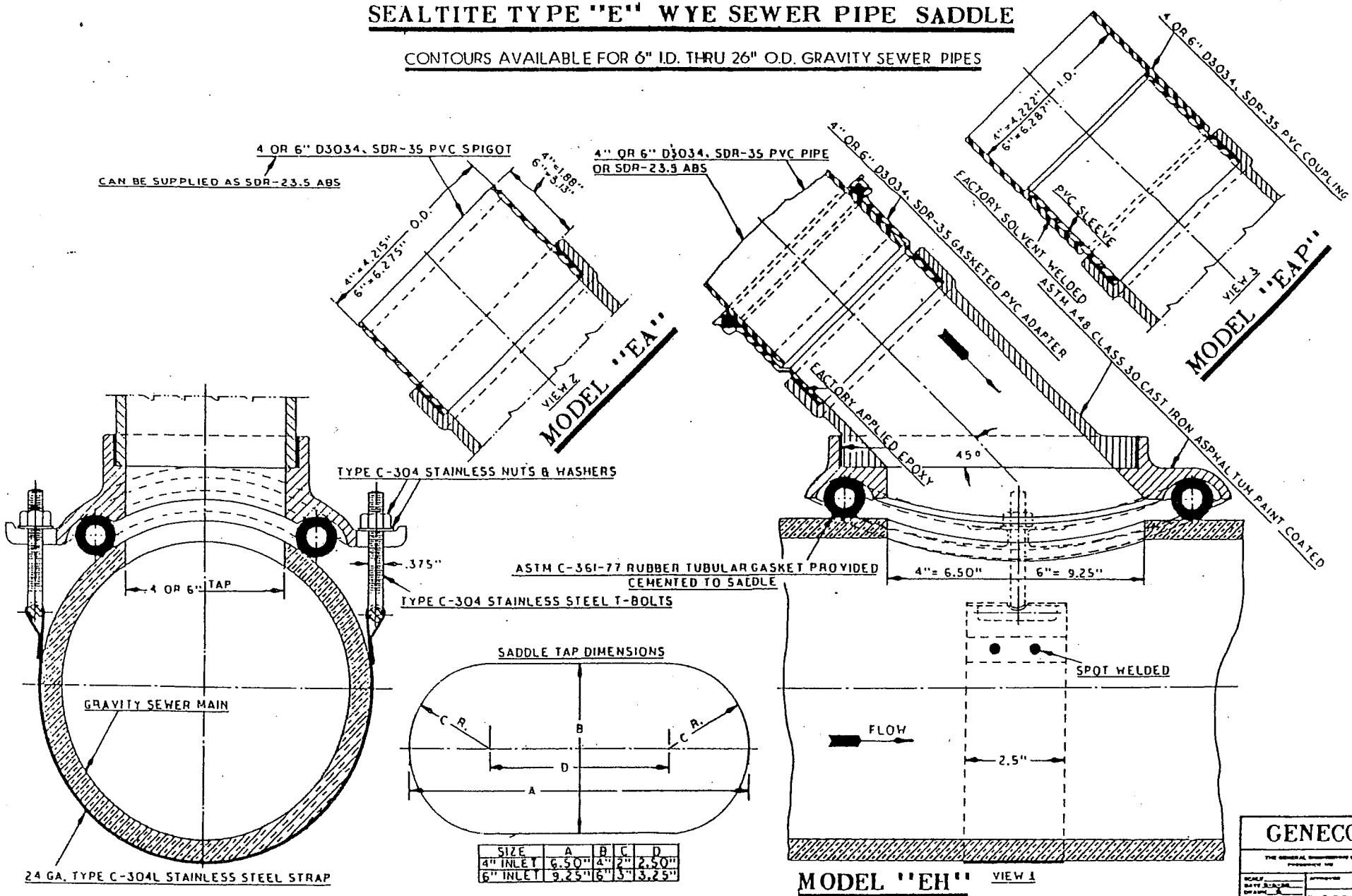

SIZE	A	B	C	D
4" INLET	6.50"	4"	2"	2.50"
6" INLET	9.25"	6"	3"	3.25"

THIS DWG SUPESEDES R-3157-D

FORM E-20

SADDLE SELECTION CHART

4" INLET TYPE "E" WYE SEALTITE SEWER PIPE SADDLE

CONTOURS AVAILABLE FOR 6" I.D. THRU 26" O.D. PIPES

SEE REVERSE SIDE FORM 20REV FOR RECOMMENDED MODELS TO CONNECT LATERALS - FORM E-18 LISTS DRAWINGS TO ILLUSTRATE MODELS

TYPE MAIN	6" MAIN		8" MAIN		10" MAIN		12" MAIN		14" MAIN		15" MAIN		16" MAIN		18" MAIN		20" MAIN		21" MAIN		24" MAIN	
	SADDLE	STRAP	SADDLE	STRAP	SADDLE	STRAP	SADDLE	STRAP	SADDLE	STRAP	SADDLE	STRAP	SADDLE	STRAP	SADDLE	STRAP	SADDLE	STRAP	SADDLE	STRAP	SADDLE	STRAP
A-C - CLASS 1500	4EA	14"	4EB	19"	4EC	27"	4EC	32.5"	4EC	40"	4ED	C43"	4ED	C45"								
A-C - CLASS 2400	4EA	14	4EB	19	4EC	27	4EC	32.5	4EC	40	4ED	C43	4ED	C45	4ED	C52"	4ED	C57"	4ED	C61"	4ED	C71"
A-C - CLASS 3300	4EA	14	4EP	20	4EC	28.5	4EC	34	4EC	40	4ED	C43	4ED	C45	4ED	C52	4ED	C59	4ED	C63		
A-C - CLASS 4000					4EC	28.5	4EC	34	4EC	40	4ED	C43	4ED	C47	4ED	C52	4ED	C59	4ED	C63		
A-C - CLASS 5000					4EC	28.5	4EC	36	4EC	40	4ED	C45	4ED	C47	4ED	C53	4ED	C61	4ED	C65		
ARMCO TRUSS			4EB	20	4EC	28.5	4EC	36			4ED	C45										
CAST IRON - SV	4EA	12.5	4EB	18	4EC	23.5	4EC	31			4EC	40										
CAST IRON - NO-HUB	4EA	12.5	4EP	18																		
CAST IRON - XH	4EA	12.5	4EP	19	4EB	23.5	4EC	31			4EC	40										
DUCTILE IRON	4EA	14	4EB	19	4EC	27	4EC	32.5	4EC	40			4ED	C45	4ED	C51	4ED	C57			4ED	C71
PVC - D3034, SDR-35	4EA	12.5	4EP	18	4EB	23.5	4EC	31			4EC	40			4ED	C49			4ED	C59	4ED	C69
SCHEDULE 40	4EA	12.5	4EP	18	4EB	28.5	4EC	31	4EC	36			4EC	40	4ED	C47	4ED	C52			4ED	C65

6" INLET TYPE "E" WYE SEALTITE SEWER PIPE SADDLE

CONTOURS AVAILABLE FOR 8" I.D. THRU 26" O.D. PIPES

SEE REVERSE SIDE FORM 20REV FOR RECOMMENDED MODELS TO CONNECT LATERALS - FORM E-18 LISTS DRAWINGS TO ILLUSTRATE MODELS

TYPE MAIN	8" MAIN		10" MAIN		12" MAIN		14" MAIN		15" MAIN		16" MAIN		18" MAIN		20" MAIN		21" MAIN		24" MAIN	
	SADDLE	STRAP	SADDLE	STRAP	SADDLE	STRAP	SADDLE	STRAP	SADDLE	STRAP	SADDLE	STRAP	SADDLE	STRAP	SADDLE	STRAP	SADDLE	STRAP	SADDLE	STRAP
A-C - CLASS 1500	6EA	18"	6EB	25"	6EB	29.5"	6EC	38"	6ED	C41"	6ED	C45"								
A-C - CLASS 2400	6EA	18	6EB	25	6EB	29.5	6EC	38"	6ED	C41	6ED	C45	6ED	C51	6ED	C57	6ED	C59	6ED	C69
A-C - CLASS 3300	6EA	18	6EB	25	6EC	32.5	6EC	38	6ED	C43	6ED	C45	6ED	C51	6ED	C57	6ED	C61		
A-C - CLASS 4000			6EB	25	6EC	32.5	6EC	40	6ED	C43	6ED	C47	6ED	C51	6ED	C57	6ED	C61		
A-C - CLASS 5000			6EB	25	6EC	34	6EC	40	6ED	C43	6ED	C47	6ED	C53	6ED	C59	6ED	C63		
ARMCO TRUSS	6EA	19	6EB	25	6EC	34			6ED	C45										
CAST IRON - SV	6EA	17	6EB	23.5	6EB	27			6EC	40										
CAST IRON - NO-HUB	6EA	17																		
CAST IRON - XH	6EA	17	6EB	23.5	6EB	28.5			6EC	40										
DUCTILE IRON	6EA	18	6EB	25	6EB	29.5	6EC	38			6ED	C45	6ED	C49	6ED	C57			6ED	C69
PVC - D3034, SDR-35	6EA	17	6EB	23.5	6EB	27			6EC	38			6ED	C49			6ED	C57	6ED	C65
SCHEDULE 40	6EA	17	6EP	23.5	6EB	28.5	6EC	34			6EC	40	6ED	C47	6ED	C51			6ED	C63

NOTE - FOR CONNECTIONS TO BE MADE TO CLAY, CONCRETE OR OTHER SIZES AND KINDS OF MAINS NOT LISTED ABOVE CONTACT THE FACTORY: GIVE MAIN PIPE O.D. PLUS SIZE AND KIND OF LATERAL TO BE CONNECTED.

PROBLEM - SELECT SADDLE TO CONNECT A 4" SDR-35 PVC SPIGOT LATERAL TO A 10" DUCTILE IRON MAIN

SOLUTION - ABOVE CHART SPECIFYS A NO. 4EC SADDLE AND A 27.0" STRAP IS REQUIRED - REVERSE SIDE FORM 20REV RECOMMENDS USING A MODEL "H"

GENECO

THE GENERAL ENGINEERING COMPANY

FREDERICK, MD

PHONE 301/663-9282

OVER PLEASE

Z-1091 BACKWATER VALVE Flapper Type

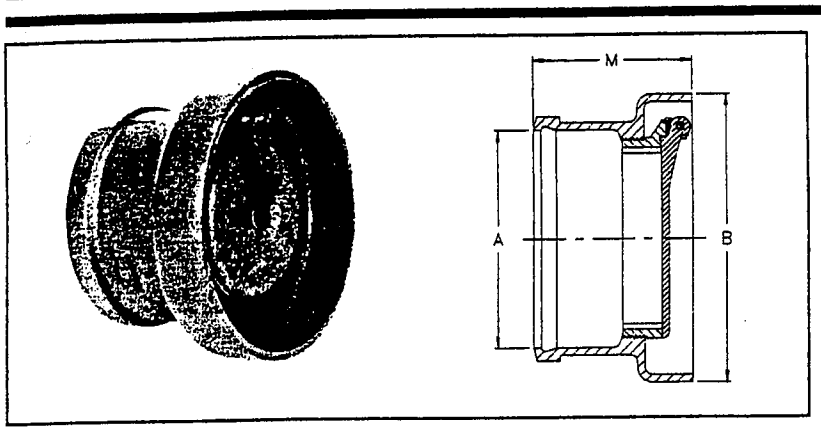

Product Designation	Dimensions In Inches			Approx. Wt. Lbs.	Z*
	A Pipe Size	B	M		
-3	3	7	5	12	$ 105.75
-4	4	7-1/2		15	153.25
-5	5	10-1/2	6	20	366.75
-6	6	9-1/2	5-1/4	28	438.25
-8	8	11-1/2	6	42	533.50
-10	10	14	7	58	1606.50

ENGINEERING SPECIFICATION: ZURN Z-1091 Backwater Valve, Dura-Coated cast iron body, hub inlet and open outlet for installation at end of drainage line, automatic type valve seat which hangs closed during periods of non-operation.

OPTIONS

CONNECTIONS (Specify pipe size in inches and type of outlet)

CONNECTION TYPE	CONNECTION DESIGNATION Pipe Size/Outlet Type
Hub	See Chart

PREFIXES (See chart for pricing)
Z- D.C.C.I. Body with Bronze Valve*

SUFFIXES			ADD
-G	Galvanized Cast Iron	3", 4"	$ 53.00
		5", 6"	74.00
		8", 10"	153.25

* 3" and 4" furnished with ABS seat and flapper.

SPECIFY BRONZE FLAPPER
SPECIAL ORDER

Z-1095 BACKWATER VALVE Flapper Type

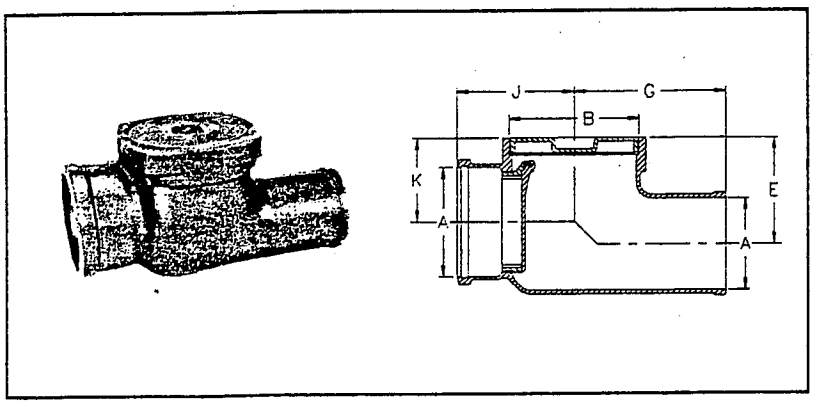

Product Designation	Dimensions in Inches						Approx. Wt. Lbs.	Z*
	Pipe Size		E	G	J	K		
	A	B						
-2	2	4	4-3/8	7	5	2-7/8	23	$ 253.50
-3	3	5	5-1/8	8	6	3-5/8	30	394.75
-4	4	6	5-5/8	8-1/2	6-3/4	4-1/8	34	487.25
-5	5	7	5-1/2	9-1/2	7-1/4	4	50	586.25
-6	6	8	6	10	7-3/4	4-1/2	57	701.00
-8	8	10	7-1/2	11-7/8	9-3/8	6	79	984.75
-10	10	12		12-3/4	10-7/8	7	102	1608.50

ENGINEERING SPECIFICATION: ZURN Z-1095 Backwater Valve, Dura-Coated cast iron body, hub inlet and offset spigot outlet, bronze threaded cover, automatic type valve seat and flapper which hangs closed during periods of non-operation.

*Regularly furnished unless otherwise specified.

OPTIONS

CONNECTIONS (Specify pipe size in inches and type of outlet)

CONNECTION TYPE	CONNECTION DESIGNATION Pipe Size/Outlet Type
Hub x Spigot	See Chart

PREFIXES (See chart for pricing)
Z- D.C.C.I. Body*

SUFFIXES			ADD
-BC	Bolted Cover		N/C
-G	Galvanized Cast Iron	2" thru 4"	$ 90.00
		5", 6"	150.50
		8", 10"	269.50
-FC	Adjustable Floor Cleanout		—
	(2" thru 6")	2" thru 4"	64.50
		5", 6"	129.00

SPECIFY BRONZE FLAPPER
SPECIAL ORDER

B36 Utility Box 17-1/4" x 30"

Christy

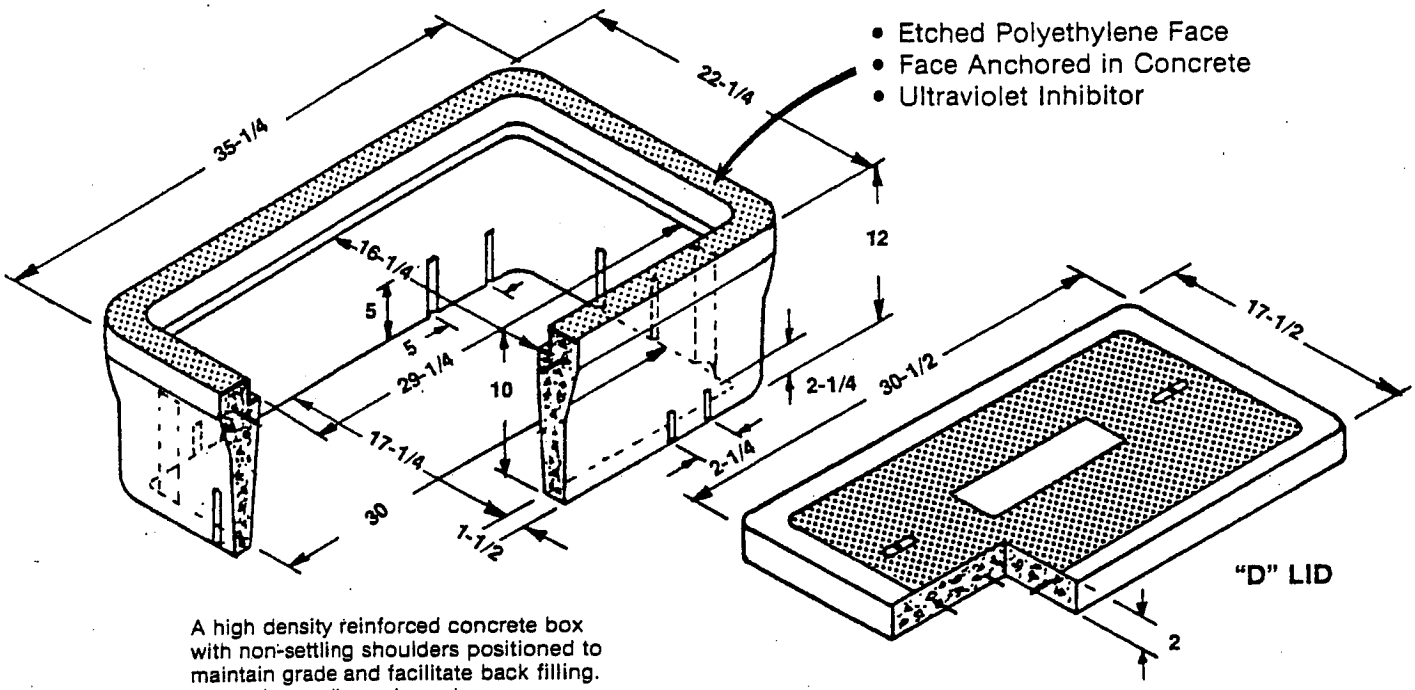

- Etched Polyethylene Face
- Face Anchored in Concrete
- Ultraviolet Inhibitor

A high density reinforced concrete box with non-settling shoulders positioned to maintain grade and facilitate back filling. Approximate dimensions shown.

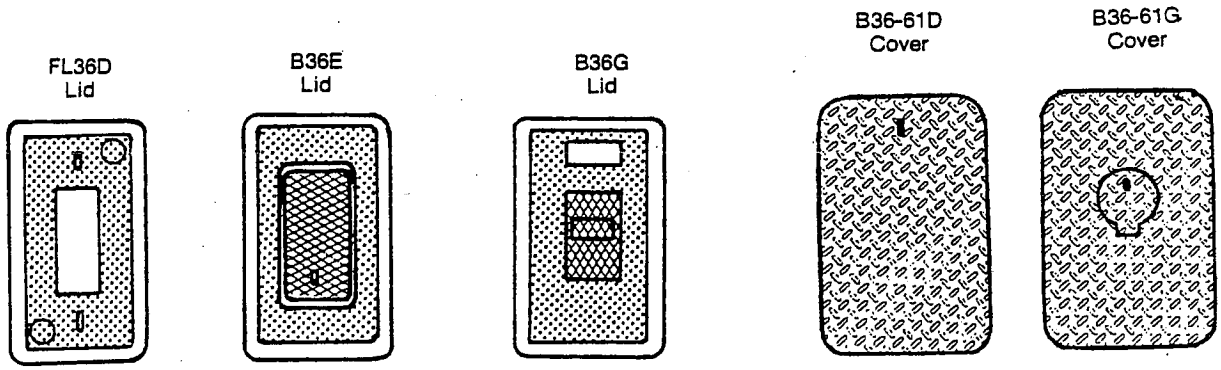

CHRISTY ORDERING CODE	ITEM	APPROX. SHIPPING WEIGHT	DESCRIPTION
B36BOX	**Box**	**175**	**B36 Utility Box (17-1/4" x 30") — 6 Per Pallet**
B36D	Lid	80	D70 Reinforced Concrete
FL36D	Lid	28	36FLD FIBRELYTE Lid
B36E	Lid	95	E70 Reinforced Concrete w/7" x 13-1/2" Concrete reading lid
B36G	Lid	100	G70 Rein. Conc. w/5" x 8" CI self-closing reading lid w/frame
B36-61D	Cover	59	61D70 Steel Checker Plate
B36-61G	Cover	60	61G70 Steel Checker Plate w/8" round self-closing reading lid
B36X12	Extension	153	1395 12" Reinforced Concrete
B36SL	Slab	112	3190 Reinforced Concrete
B36BA	Base	122	4190 6" high Reinforced Concrete

GET THE PRECAST ADVANTAGE

NATIONAL PRECAST CONCRETE ASSOCIATION

Galvanizing available on all steel lids and covers.

TO FIND CENTIMETERS MULTIPLY INCHES BY 2.5
TO FIND KILOGRAMS MULTIPLY POUNDS BY .45

G5 Traffic ValveBox
10-3/8" I.D. x 12"

Christy

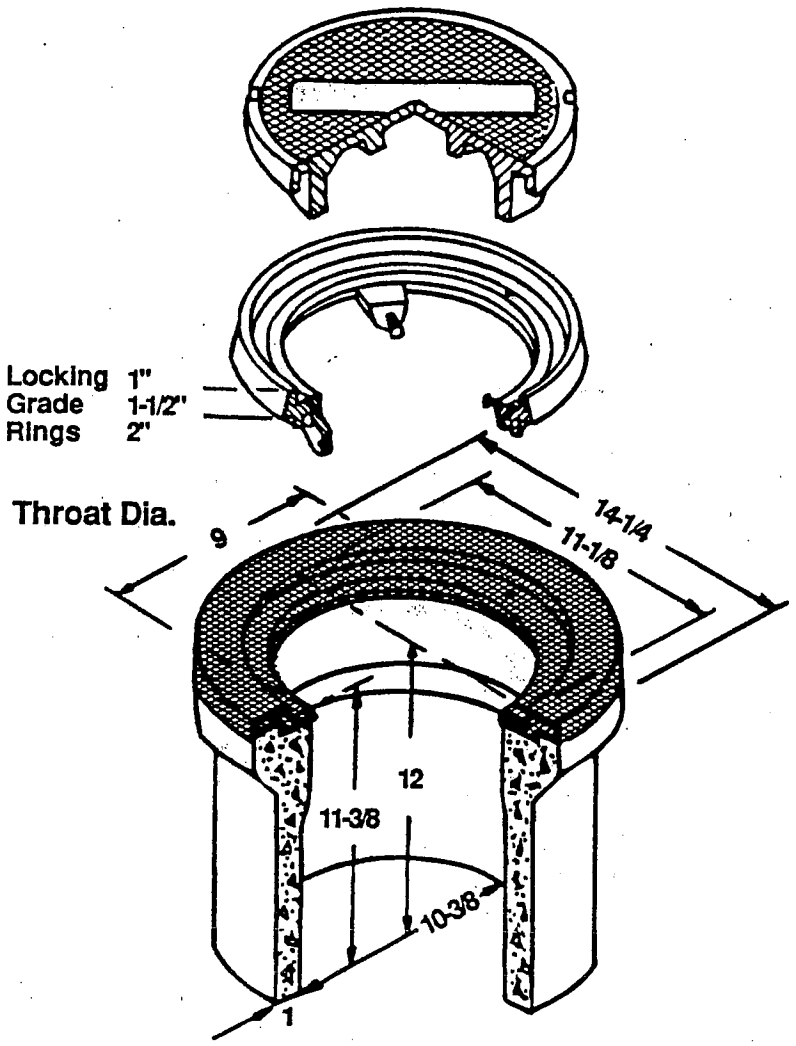

The largest throat diameter for any box in its size range permits quick, easy valve adjustments. The large throat also makes this unit highly adaptable as a survey monument box.

Unique locking grade rings assure permanence and quality of surface grades when streets are re-paved. Telescoping extensions facilitate installation at jobsite and act to isolate pipeline from road shock.

This valve box is specifically designed to meet modern day requirements. The carefully engineered iron lid and ring seat furnishes a complete unit reducing the danger of lid "pop-out" in heavy traffic areas. Vandal resistance is optional at extra cost by the addition of hold down screws. Approximate dimensions shown.

CHRISTY ORDERING CODE	ITEM	APPROX. SHIPPING WEIGHT	DESCRIPTION
G5BOX	**Box**	**61**	**G5 Traffic Valve Box (10-3/8" I.D. x 12" High)—36 Per Pallet**
G5C	Lid	10	Cast Iron, Traffic
G5X12	Extension	29	12" Concrete—32 Per Pallet
G5XP8	Extension	1	ADS 8", Plastic
G5XP12	Extension	1	ADS 12", Plastic
F14XP120	Extension	11	ADS 10' Lengths, Plastic
G5GR10	Grade Ring	10	1" High, Cast Iron
G5GR15	Grade Ring	14	1-1/2" High, Cast Iron
G5GR20	Grade Ring	17	2" High, Cast Iron

F8 Curb Valve Box
8-1/2" I.D. x 11-3/4"

Christy

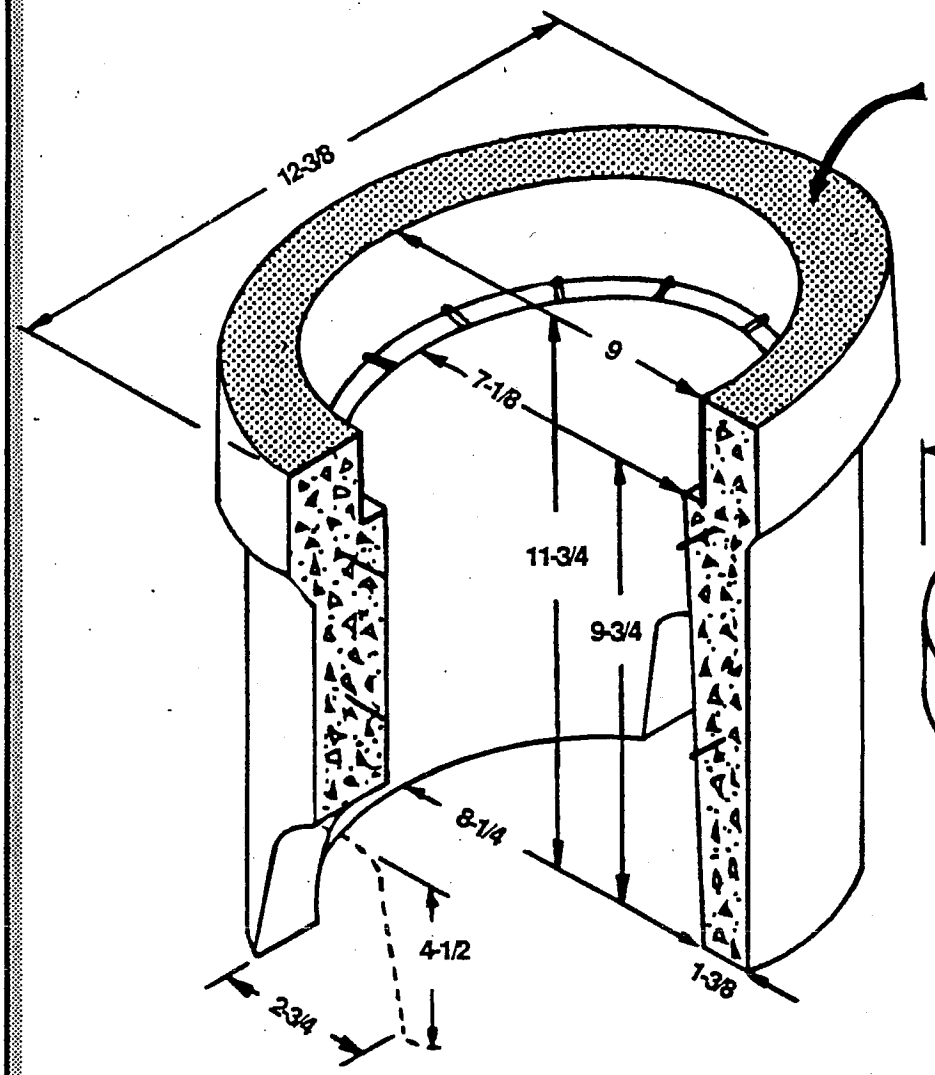

- Etched Polyethylene Face
- Face Anchored in Concrete
- Ultraviolet Inhibitor

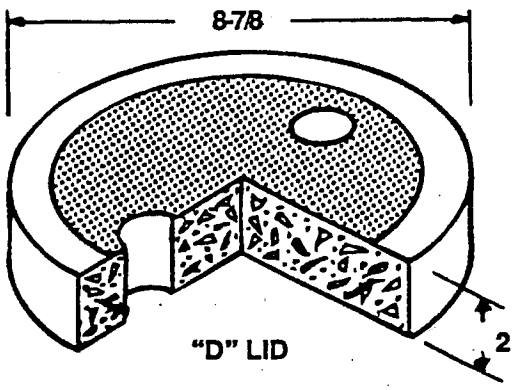

A high density reinforced concrete box with non-settling shoulders positioned to maintain grade and facilitate back filling. Approximate dimensions shown.

CHRISTY ORDERING CODE	ITEM	APPROX. SHIPPING WEIGHT	DESCRIPTION
F8BOX	**Box**	**44**	**F8 Curb Valve Box (8-1/2" I.D. x 11-3/4" High)- 48 Per Pallet**
F8D	Lid	9	Reinforced Concrete
FL8D	Lid	3	8FLD FIBRELYTE Lid
F8C	Lid	7	Cast Iron
V1-71C	Grate	10	Cast Iron

Groeniger & Company

FIRE PROTECTION (800) 675-7473

HAYWARD	MODESTO	FRESNO	SACRAMENTO
(510) 786-3333	(209) 577-3333	(209) 442-3333	(916) 455-3333
FAX (510) 782-7905	FAX (209) 529-6520	FAX (209) 266-0858	FAX (916) 455-3402
27750 Industrial Blvd.	1600 Palm Ave.	2812 South Orange Ave.	7832 Ramona Ave.
Hayward, CA 94545-4094	Modesto, CA 95351-1538	Fresno, CA 93725-1922	Sacramento, CA 95826-3820

Inventory • Product Engineering • Sales • Service

Creative Systems ENGINEERING Inc.
DecoShield®
Cover Support System

Interfit Grooved Piping System
Grooved End Fittings
FM Approved UL LISTED

STAR SPRINKLER CORPORATION
FIRE PROTECTION PRODUCTS

AMERICAN-DARLING
AMERICAN-DARLING VALVE
UL-FM GATE VALVES & POST INDICATORS
UL-FM HYDRANTS

SPEARS® MANUFACTURING CO.
SPEARS BlazeMaster® Pipe and Fittings

AMES
AMES COMPANY, INC.
FABRICATED FITTINGS FOR C-900
SPECIALTY FABRICATING
DETECTOR CHECK VALVES

SYSTEM SENSOR™
FLOW SWITCHES
SUPERVISORY SWITCHES

Christy
CONCRETE PRODUCTS, INC.
CONCRETE VALVE & METER BOXES
DRAIN BOXES
SPECIALTY VAULTS

PHD Manufacturing, Inc.

CLOW CORPORATION
UL-FM RESILIENT SEAT VALVES
POST INDICATORS
TAPPING VALVES & SLEEVES
FIRE HYDRANTS

MILWAUKEE VALVE COMPANY, INC.
UL-FM BUTTERBALL BRONZE VALVES
SUPERVISORY SWITCHES

PWPipe EXTRUDED PLASTICS COMPANY
C-900 AWWA WATER PIPE

WARD MANUFACTURING
FIRE PROTECTION PRODUCTS

World Class Valves
WATTS® REGULATOR
Since 1874
BACKFLOW PREVENTION DIVISION

UNITED
UNITED BRASS WORKS, INC.
BRASS VALVES
WAFER CHECKS

SIGMA & NAPPCO PRODUCTS Marketed By ALLCAST CORP.
UL FM
SIGMA CORPORATION
MECHANICAL JOINT FITTINGS

ISLAND
Type 40 & 10
WELD OUTLET CARBON STEEL SHAPED NIPPLE
FOR FIRE PROTECTION AND OTHER LOW PRESSURE PIPING SYSTEMS
USA

STOCKHAM VALVES & FITTINGS
UL & INDUSTRIAL GATE VALVES
BRASS GATE VALVES
FLANGED & SCREWED FITTINGS

North Alabama Pipe Corporation
"Innovators of Pipe Fabrication Equipment"
THREAD O LETS
"THE HOLE SYSTEM"

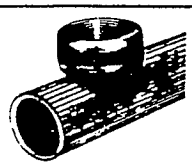

U.S. PIPE
United States Pipe & Foundry Company
TYTON JT. MECH JOINT
DUCTILE IRON PIPE
D.I. M.J. FITTINGS

FIRE PROTECTION

WESTBURNE SUPPLY

INDUSTRIAL

FITTINGS

Carbon Steel Weld Fittings and Flanges
- ☐ Jackney
- ☐ Bofco
- ☐ Weld Bend
- ☐ Mills Iron

Malleable, Cast Iron, Ductile, Threaded and Flanged
- ☐ Stockham
- ☐ U.S. Pipe
- ☐ Grinnell

Stainless Steel
- ☐ Capitol
- ☐ Standard Fittings

Plastic
- ☐ Nibco/Chemtrol
- ☐ GSR Sloan
- ☐ A.O. Smith
- ☐ Spears

Forged Steel
- ☐ Standard Fittings
- ☐ Anvil
- ☐ Capitol

Grooved
- ☐ Gustin Bacon
- ☐ Grinnell

O'Lets, Bull Plugs
- ☐ Bonney Forge
- ☐ Standard Fittings

Instrumentation
- ☐ Imperial Eastman
- ☐ Parker Fast n'Tite

Copper and Brass
- ☐ Nibco
- ☐ Elkhart
- ☐ Lee
- ☐ Mueller
- ☐ Flagg
- ☐ Dixon
- ☐ _____
- ☐ _____

HANGERS AND SPECIALTIES
- ☐ Mueller Wye Strainers
- ☐ Blue and White Flowmeters
- ☐ Superstrut Framing & Channel
- ☐ Kinline Framing & Channel
- ☐ Marshalltown Gauges & Thermometers
- ☐ Haws Emergency Showers & Eyewashes
- ☐ Rockwell Repair Clamps and Couplings
- ☐ McDonnel Miller Flow Switches and Boiler Feeders
- ☐ Flexonics Expansion Joints & Pump Connectors
- ☐ Calpico Flange Insulation Kits
- ☐ Brady Pipe Markers
- ☐ Nuts and Bolts
- ☐ B-7 Studs
- ☐ 3-M Scotchwrap
- ☐ Allthread
- ☐ Gaskets
- ☐ PVC Solvents
- ☐ Pipe Dope
- ☐ Duct Tapes
- ☐ Paint
- ☐ Solder
- ☐ Anchors
- ☐ Pumps
- ☐ Steam Traps
- ☐ _____
- ☐ _____

TOOLS
- ☐ Ridgid Pipe & Hand Tools
- ☐ Milwaukee Power Tools
- ☐ Wright Sockets & Wrenches
- ☐ Collins/Roco Pipe & Power Tools
- ☐ Wheeler Pipe Tools
- ☐ Cherne Test Plugs
- ☐ Homelight Generators, Pumps, Saws
- ☐ Mueller Drilling Machines
- ☐ _____
- ☐ _____

SERVICES
- ☐ Pipe Grooving
- ☐ Pipe Threading
- ☐ Pipe Cutting
- ☐ Pipe Bevelling
- ☐ Valve Actuating
- ☐ Valve Modification
- ☐ _____
- ☐ _____

CARBON STEEL PIPE AND TUBING
- ☐ A-120 CW
- ☐ A-53 CW
- ☐ A-53/API 5L ERW Gr.B
- ☐ A-53/API 5L Gr.B Seamless
- ☐ A-106 Gr.B Pressure Tube
- ☐ A-106 Gr.B Seamless
- ☐ X-Tru Coat
- ☐ Scotch Coat
- ☐ Domestic
- ☐ Import

Manufacturers
- ☐ U.S. Steel
- ☐ Sharon
- ☐ Hyundai
- ☐ Laclede
- ☐ Wheatland
- ☐ Maruichi
- ☐ Frontier
- ☐ _____
- ☐ _____

STAINLESS STEEL PIPE AND TUBING
- ☐ 304/304L
- ☐ 316/316L
- ☐ Sanitary
- ☐ Instrument
- ☐ _____
- ☐ _____

COPPER & BRASS
- ☐ Type K Oxygen Service
- ☐ Type L ACR
- ☐ Copper Type K,L,M,DWV
- ☐ Refrigeration Tubing
- ☐ Copper Pipe
- ☐ Plastic Coated
- ☐ Red Brass Pipe

Brass Manufacturers
- ☐ Cerro
- ☐ Reading
- ☐ Halstead
- ☐ Mueller
- ☐ _____
- ☐ _____
- ☐ _____
- ☐ _____
- ☐ _____

PLASTIC PIPE AND TUBING
- ☐ PVC
- ☐ PVC/DWV
- ☐ Polypropylene
- ☐ PVDF
- ☐ CPVC
- ☐ High Density Polyethylene
- ☐ Instrument Tube
- ☐ Fiberglass

Manufacturers
- ☐ PW Pipe
- ☐ GSR Sloan
- ☐ A.O. Smith
- ☐ JM
- ☐ Apache
- ☐ Parker
- ☐ EPCO
- ☐ Phillips Driscopipe
- ☐ Imperial Eastman
- ☐ Can Tex
- ☐ _____
- ☐ _____

VALVES

Crane/Aloyco
- ☐ Bronze & Iron
- ☐ Cast Steel
- ☐ Forged Steel
- ☐ Ball
- ☐ Butterfly
- ☐ Corrosion Resistant

Ralmondi
- ☐ Cast Steel

Apollo/Conbraco
- ☐ Ball
- ☐ Needle
- ☐ Pressure Relief
- ☐ Gauge Cocks

Grinnell
- ☐ Butterfly
- ☐ Diaphragm

Dezurik
- ☐ Plug

Mueller/M & H
- ☐ AWWA Valves

Nibco
- ☐ Bronze & Iron
- ☐ Ball
- ☐ Butterfly

Resun
- ☐ Cast Iron Plug
- ☐ Cast Steel Plug
- ☐ Alloy Plug

Febco/Bailey
- ☐ Pressure Reducing
- ☐ Control
- ☐ Backflow Preventors

Smith
- ☐ Forged Steel Gates, Globes, Checks

Watts
- ☐ Bronze Ball Value
- Gate Value
- Check Value
- ☐ High Performance Butterfly
- ☐ Diaphram Valves
- ☐ _____
- ☐ _____

WESTBURNE SUPPLY

WATERWORKS

PIPE

J.M. Manufacturing
- ☐ C-900 PVC
- ☐ C-905 PVC
- ☐ SDR-35
- ☐ PVC
- ☐ Perma Loc

Vinyltech
- ☐ C-900 PVC
- ☐ C-905 PVC
- ☐ SDR-35
- ☐ PVC

U.S. Pipe
- ☐ Ductile Iron

Pacific States
- ☐ Ductile Iron
- ☐ Hi-Lite Iron

Mission
- ☐ Clay

Gladding McBean
- ☐ Clay

Westflex
- ☐ Polyethylene

Lache Plastics
- ☐ SDR-35
- ☐ PVC & ABS

Drisco
- ☐ Polyethylene

Domestic & Import
- ☐ Steel-galv. & black

Halstead
- ☐ Copper

Hancor

Mueller
- ☐ Copper

Advance Drainage Systems
- ☐ High Density Polyethylene

VALVES

American AVK
- ☐ Resiliant Wedge
- ☐ OS & Y
- ☐ UL/FM

Mueller
- ☐ Resilient Wedge
- ☐ OS & Y
- ☐ UL/FM
- ☐ Butterfly
- ☐ Check

Keystone
- ☐ Butterfly
- ☐ Plug

Kennedy
- ☐ Resilient Wedge

M & H
- ☐ Gates, Checks Hydrants
- ☐ Butterfly
- ☐ Resilient Wedge

Resun
- ☐ Plug

Dezurik
- ☐ Plug

Milliken
- ☐ Plug

Crane
- ☐ Check
- ☐ Industrial

Waterman
- ☐ Sluice
- ☐ Mud

Fresno Valves
- ☐ Mud

Cla-Val
- ☐ Control

Stockham
- ☐ Industrial

Febco
- ☐ Backflow

Wilkins
- ☐ Backflow

Watts
- ☐ Backflow

Waterous Valves
- ☐ Resillient Wedge
- ☐ Fire Hydrant

FITTINGS

Sigma
- ☐ Ductile Iron C110 & C153

Star
- ☐ Ductile Iron C110 & C153

US Pipe
- ☐ Ductile Iron C110 & C153

James Jones
- ☐ Brass Service

Mueller
- ☐ Brass Service
- ☐ Copper

Ford
- ☐ Brass Service

Halstead
- ☐ Copper

Lee
- ☐ Brass

NDS
- ☐ ABS

Custom Pipe
- ☐ Spools DI

Domestic & Import
- ☐ Galv. & Black Malleable

Waterworks Mfg.
- ☐ Spools Polylined & Glass

Tyler Pipe
- ☐ Cast Iron C110 & C153
- ☐ Ductile Iron C110 & C153

Union Foundry

SPECIALTIES

Ebba Iron
- ☐ Mega Lug & Flex Tend

Smith Blair
- ☐ Flex Couplings
- ☐ Tapping Sleeves
- ☐ Repair Clamps

Romac
- ☐ Flex Couplings
- ☐ Tapping Sleeves
- ☐ Repair Clamps

Powerseal
- ☐ Flex Couplings
- ☐ Repair Clamps

JCM
- ☐ Flex Couplings
- ☐ Repair Clamps

Mueller
- ☐ Tapping Sleeves
- ☐ Fire Hyd-Wet
- ☐ Fire Hyd-Dry

James Jones
- ☐ Fire Hyd-Wet

American Avk
- ☐ Fire Hyd-Wet
- ☐ Fire Hyd-Dry

Long Beach Iron
- ☐ Fire Hyd-Wet

Proco
- ☐ Expansion Joints

Hersey
- ☐ Detector Checks

Ames
- ☐ Detector Checks

Febco
- ☐ Detector Checks

APCO
- ☐ Air & Vac Valves

Bermad
- ☐ Air & Vac. Valves

Allcrete
- ☐ Water Stop

Long Beach Iron Works
- ☐ Fire Hydrant Bury
- ☐ Hydrant Extentions

WHEN YOU NEED IT NOW!

FITTINGS

NO-HUB cast iron 1½" - 10"
Hub and spigot cast iron 2" - 8"
COPPER water & drainage ½" - 6"
Malleables,
black & galvanized ⅛" -4"
Extra heavy malleables ½" - 2"
Cast iron screwed ½" - 4"
Grooved black & galvanized 1½" - 6"
Brass screwed ⅛" - 4"
C.P. brass screwed ⅜" - 1"
ABS DWV 1½" - 6"
PVC SCH 40 & SCH 80 ½" - 4"
PVC DWV SCH 40 1½" - 6"
Brass insert fittings
ADS plastic drainage
Durham cast iron
Standard pipe-o-lets
Dresser galvanized compression couplings
Brass compression couplings
Chrome plate slip joint fittings
Chrome plate solder fittings
Brass insert fittings for polyethelene
Mission couplings
Mission clay – bandseal
Calder couplings
MG couplings
Flexible copper water connectors
Water Meter couplings
Repair pipe clamps (all styles)
Victaulic copper fittings 2" - 6"
Type #304 stainless steel fittings ¼" - 2"
Bronze & stainless braided flexible connectors
Weld fittings 1" - 6"

NIPPLES

Galvanized standard
Black standard & extra heavy
Brass – standard & chrome plated
Chrome plated
PVC SCH 80
Right & left nipples & couplings
Type #304 stainless steel

HANGERS CHANNEL FRAMING

SUPER STRUT
Grinnell
B-Line
Elcen
Kopty felt lined pipe straps
Holdrite straps
Specialty Products – plastic isolators, straps & hangers
Acousto Plumb: isolation straps & hangers
Union Stamping Products – hook-on bars & hooks
Threaded rod
F & A products

REGULATORS

WATTS: regulators, relief valves
Mueller: regulator repair kits
Sarco
Wilkins

BACKFLOW PREVENTION WATER METERS

Wilkins
WATTS
Febco
Hersey
Neptune
Precision

LAWN SPRINKLERS

Champion Brass heads, valves & time clocks
Hose adapters
Sprinkler & meter keys

HEATING

RESIDENTIAL & COMMERCIAL

A.O. SMITH: residential natural gas, LPG, & electric heaters
Commercial storage tanks
Bradford White residential and commercial water heaters
Ariston instantaneous heater
Eemax instantaneous heater
Aquastar instantaneous heater
In-Sink-Erator instantaneous heater

RESIDENTIAL HEATING

Williams wall heaters
MARTIN circulating heaters & floor furnaces
Perfection wall heaters

HEATING CONTROLS

McDonnell & Miller controls
Hoffman Specialty
Bell & Gossett
ITT General Controls: gas valves, thermostats & misc. controls
Honeywell
Universal intermittent ignition parts
Camco electric water heater replacement parts
Conbraco: safety valves, gauge glass sets & gauge cocks
Asco solenoid valves
Sparco/Extrol expansion tanks
Wekler pressure gauges/thermometer

ENERGY & WATER SAVING DEVICES

Pipe insulation
Water heater jackets
Low flow shower heads
Omni Flow controls
Robertshaw
Circulating pumps (time & stat controls)
Water meters
Thermacel pipe insulation
Fiberglass pipe insulation
Specialty water saving devices
Sloan low flow flush valves
1.6 gallon water closets (ULF)
Frugal flush flapper

FIRE PROTECTION

Sprinkler heads: commercial & residential
Escutcheons
Sprinkler cages
Garbage chute guards
McDonnell & Miller flow switches
Alarm bells
Sprinkler signs
Sight glasses
Bronze & iron UL approved valves
Backflow preventers
Chemical fire extinguishers
Notifier flow switches
Potter flow switches

MANY, MANY MORE PLUMBING SPECIALTY ITEMS. CALL FOR MORE INFORMATION

VINTAGE
Water Works Supply Corp.

P.O. Box 2110 • 110 Dry Creek Road
Healdsburg, CA 95448

Phone # (707) 431-7473 • Fax # (707) 431-0431

• Waterworks Full Service Supply Center •

A.C. VALVE INC
Knife Gate Valves

AMERICAN AVK
AWWA Valves & Hydrants

AMERICAN DARLING VALVES
RW P.I. Valves, Post Indicators, RW OS&Y Valves, AWWA Butterfly Valves, Check Valves, RW Gate Valves & Dry Barrel Hydrants

APCO VALVE
Air Valves & Check Valves

BADGER METER
AWWA Disk, Compound & Turbo Meters

BITCO
Special Coal Tar Coating and Wrapping

B-LINE
Metal Hangers and Clamps

BROOKS PRODUCTS
Concrete Boxes & Vaults

CALPICO INC.
Gaskets and Flange Insulating Kits

CERTAINTEED PIPE & PLASTIC
Yelomine PVC Pipe

CHERNE INDUSTRIES
Sewer Plugs and Testing Equipment

CHRISTY CONCRETE PRODUCTS
Meter Boxes and Pits

CLA-VAL
Automatic Control Valves

CLOW CORPORATION
Wet Barrel Hydrants, Hydrant Checks and Burys

FEBCO
Detector Checks, Backflow Preventor 3/4" thru 10"

FISHER RESEARCH LABORATORY
Electronic Leak Detection and Pipe Location

FLEXIBLE VALVE
Pinch Valve

FLEXONICS
Metal Expansion Joints

GENERAL RUBBER
Non-Metalic Expansion Joints

GUSTIN-BACON
Rigid Grooved Couplings

HENRY PRATT COMPANY
AWWA Butterfly Valves

HERCULES CHEMICAL CO.
PVC Cements and Thread Compound

INDIANA SEAL COMPANY
Rubber Sewer Couplings

JAMES JONES COMPANY
AWWA Bronze Corporation and Curb Valves & Bronze Fire Hydrants

MILLIKEN VALVE INC.
Full Port Eccentric Plug Valves

P W PIPE COMPANY
C-900, CL-150 & 200 and SDR-35 PVC Pipe

PILOT MANUFACTURING
Pipe Cutting Tools

POWER SEAL PIPELINE PRODUCTS
Pipe Repair Products, Clamps & Couplings and Stainless Steel Tapping Sleeves

ROMAC INDUSTRIES
Pipe Repair Products and Tapping Machines

STOCKHAM VALVES & FITTINGS
Bronze Gate & Check Valves and Galvanized Threaded Fittings

TYLER PIPE
Push-On, Mechanical Joint and Flanged 4" thru 24" Ductile Iron AWWA Fittings

U.S. PIPE & FOUNDRY
Ductile Iron Pipe

VINYLTECH CORPORATION
C-900 and SDR-35 PVC Pipe

WATERMAN INDUSTRIES
Fabricated Sluice and Slide Gates

WATER WORKS MANUFACTURING
Steel Flanged Piping and Fusion Epoxy Coatings

WESFLEX MANUFACTURING
Polyethylene Tubing and Pipe

WATTS
Pressure Reducing Valves, Backflow Preventors and Control Valves