AIRPORT–LARKFIELD–WIKIUP SANITATION ZONE TREATMENT PLANT

EMERGENCY GAS SCRUBBER SYSTEM

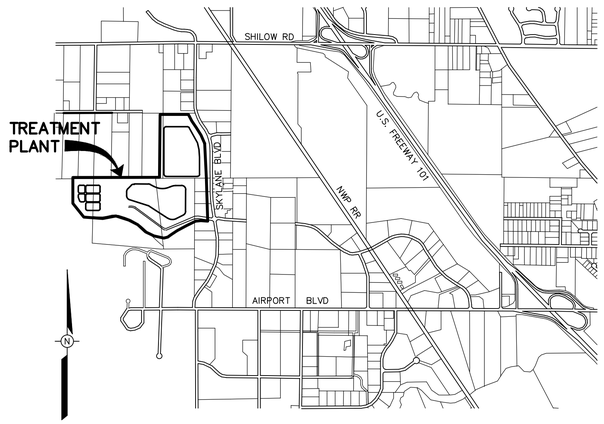

VICINITY MAP

NOT TO SCALE

SHEET NO.	DRAWING NO.	TITLE
1.	G–1	LOCATION MAP & INDEX TO DRAWINGS
2.	C–1	SITE PLAN
3.	A–1	ELEVATIONS
4.	A–2	SCRUBBER DETAILS
5.	E–1	ELECTRICAL DETAILS (OWNER FURNISHED EQUIPMENT)

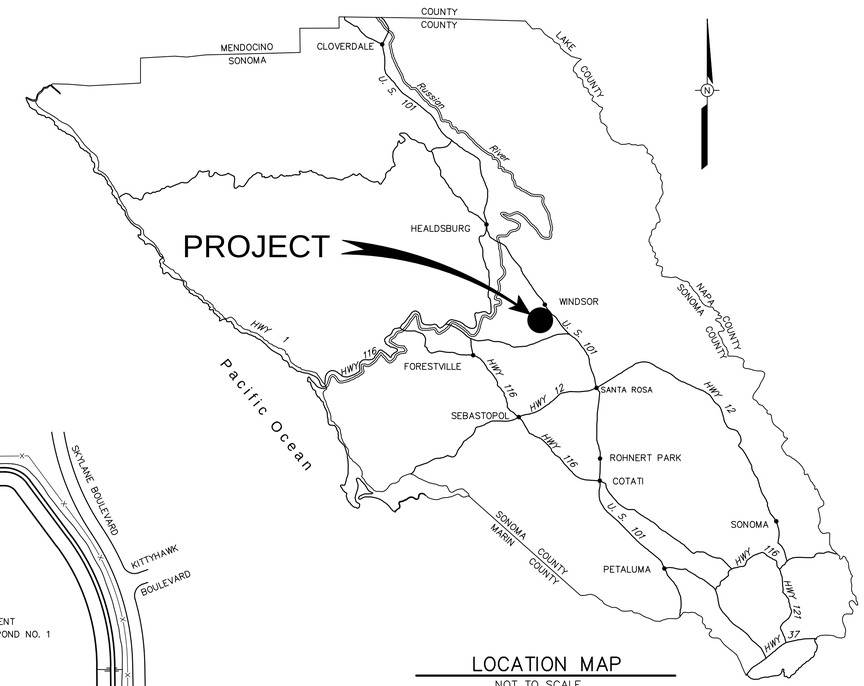

LOCATION MAP

NOT TO SCALE

GENERAL NOTES

UTILITIES : THE OWNER, TO THE BEST OF ITS ABILITY, HAS DELINEATED ON THE DRAWINGS ALL UTILITY INSTALLATIONS TO BE ENCOUNTERED WITHIN THE LIMITS OF WORK. SUCH INFORMATION IS BASED UPON INFORMATION FURNISHED TO THE OWNER BY THE UTILITY OWNERS, AND THE OWNER DOES NOT EITHER EXPRESSLY OR BY IMPLICATION GUARANTEE THAT UTILITY INSTALLATIONS WILL BE FOUND AT THE LOCATIONS OR DEPTHS INDICATED. THE OWNER ASSUMES NO RESPONSIBILITY FOR THE ACCURACY OF THE INFORMATION SHOWN OR THE INADVERTENT OMISSION OF ANY SUCH INFORMATION.

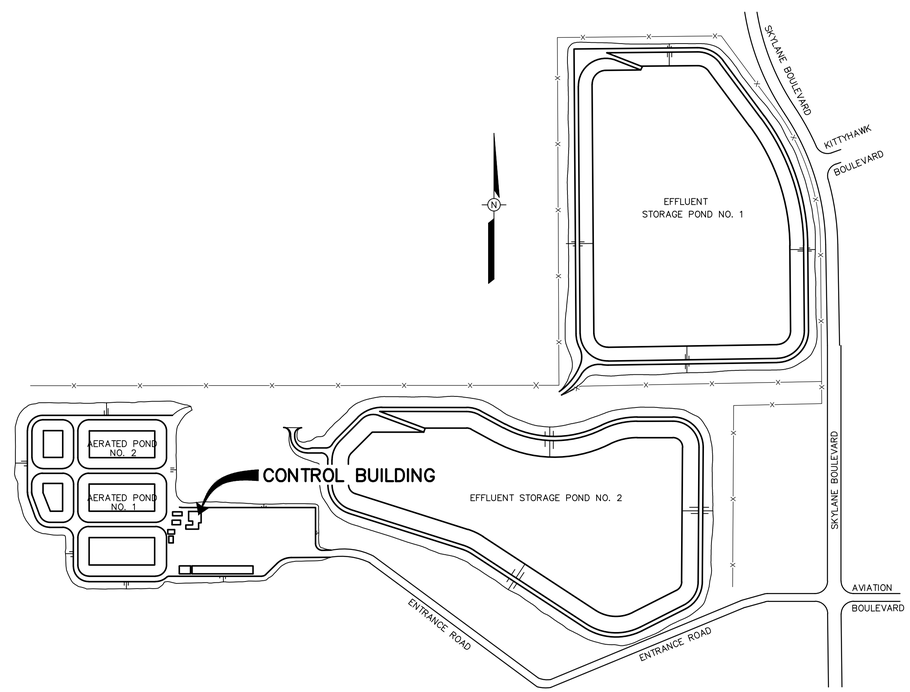

SITE PLAN

NOT TO SCALE

ABBREVIATIONS

AB	AGGREGATE BASE	GALV	GALVANIZED
AC	ASPHALT CONCRETE	MIN	MINIMUM
APPROX.	APPROXIMATE	O.C.	ON CENTER
℄	CENTER LINE	±	PLUS MINUS
CL_2	CHLORINE	SCH	SCHEDULE
CLR	CLEAR	$	SWITCH
CONC	CONCRETE	TYP	TYPICAL
Ø	DIAMETER		

TYPICAL SECTION AND DETAIL LETTERING SYSTEM

EXAMPLE:
SECTIONS AND DETAILS CUT ON SHEET NO. 12 TO BE FOUND ON SHEET NO. 15: (A/15) — SECTION OR DETAIL LETTER

ON SHEET NO. 15 THIS SECTION IS SHOWN AS: SECTION (A/12) — SECTION OR DETAIL LETTER; SHEET FROM WHICH SECTION WAS CUT

SECTIONS AND DETAILS TO BE FOUND ON SAME SHEET AS CUT: (A/—)

REGISTERED PROFESSIONAL ENGINEER
WILLIAM ALAN FLUCKIGER
No. 42700
CIVIL
STATE OF CALIFORNIA

BAR LENGTH ON ORIGINAL DRAWING EQUALS ONE INCH. ADJUST SCALE ACCORDINGLY

NO.	DATE	REVISION	BY

SONOMA COUNTY WATER AGENCY

SCALE : NONE
DATE : 9/11/2012
DRAWN : JLW
REVIEWED :

Airport-Larkfield-Wikiup Sanitation Zone Treatment Plant
EMERGENCY GAS SCRUBBER SYSTEM
LOCATION MAP & INDEX TO DRAWINGS

FILE NAME: 7589_General-1.dwg
CONTRACT NUMBER: 70-706-7 #1
DRAWING NUMBER: G-1
SHEET 1 OF 5

S:\sanitation\airport l w sz\treatment plant\7589_Energ_Gas_Scrubbers\7589_General-1

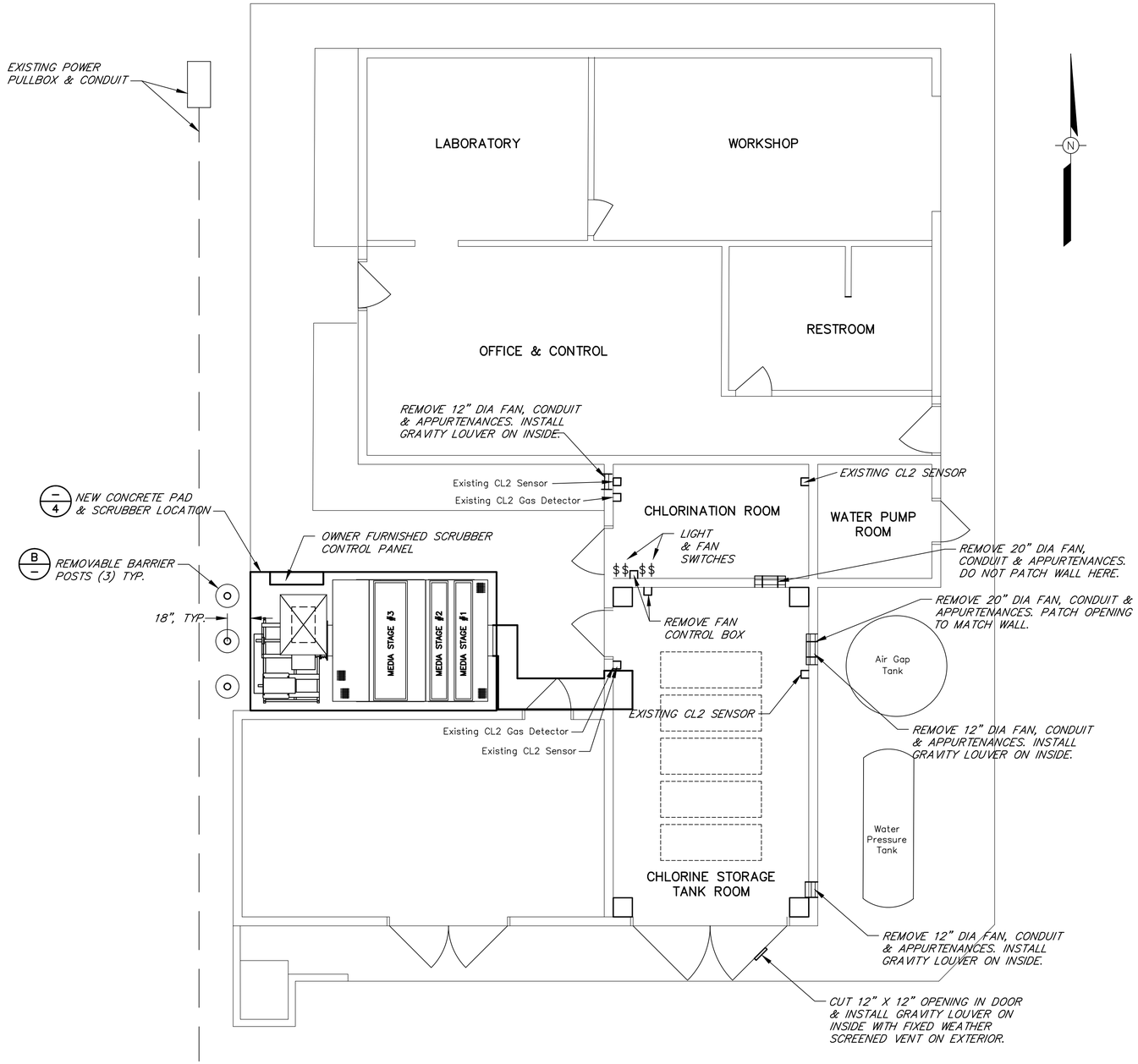

SITE PLAN

SCALE: 1"= 50'

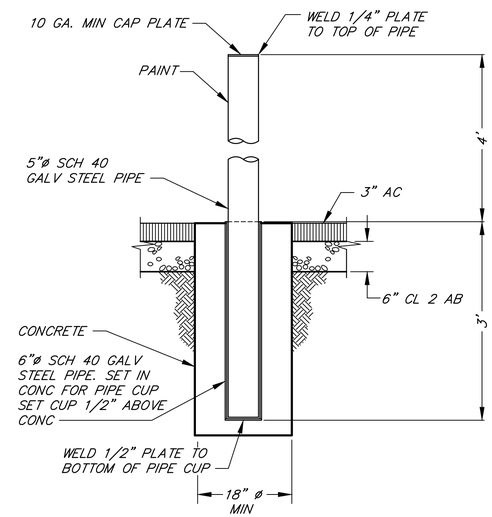

REMOVABLE BARRIER POST DETAIL

SCALE: 1"=1'-0"

BAR LENGTH ON ORIGINAL DRAWING EQUALS ONE INCH. ADJUST SCALE ACCORDINGLY

REGISTERED PROFESSIONAL ENGINEER JAMES ALAN FLUCKIGER No. 42100 CIVIL STATE OF CALIFORNIA

NO.	DATE	REVISION	BY

SONOMA COUNTY WATER AGENCY

SCALE: AS SHOWN
DATE: 9/11/2012
DRAWN: JLW
REVIEWED:

AIRPORT-LARKFIELD-WIKIUP SANITATION ZONE

EMERGENCY GAS SCRUBBER SYSTEM

SITE PLAN

FILE NAME: 7589_General-1.dwg
CONTRACT NUMBER: 70-706-7 #1
DRAWING NUMBER: C-1
SHEET 2 OF 5

S:\sanitation\airport\ w sz\treatment plant\7589_Energy_Gas_Scrubbers\7589_General-1

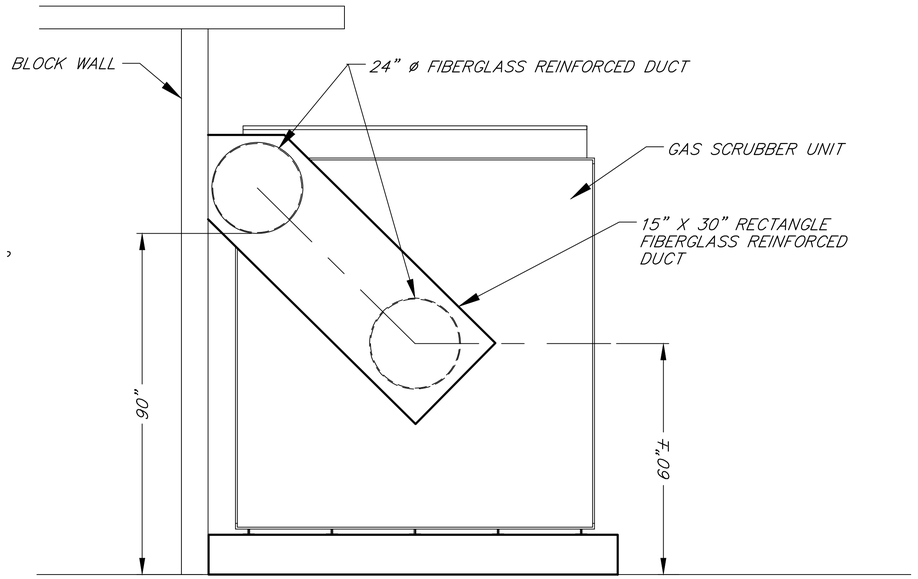

EAST ELEVATION
GAS SCRUBBER

NOT TO SCALE

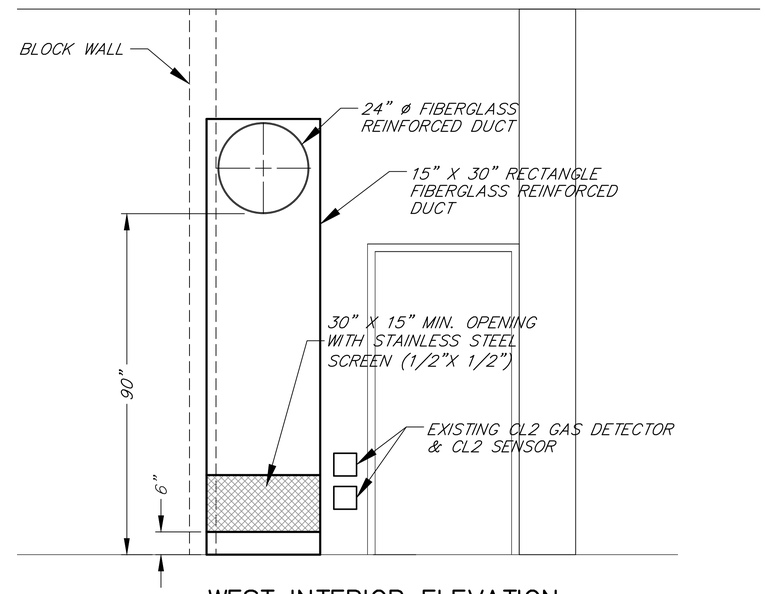

WEST INTERIOR ELEVATION
CHLORINE TANK STORAGE ROOM

NOT TO SCALE

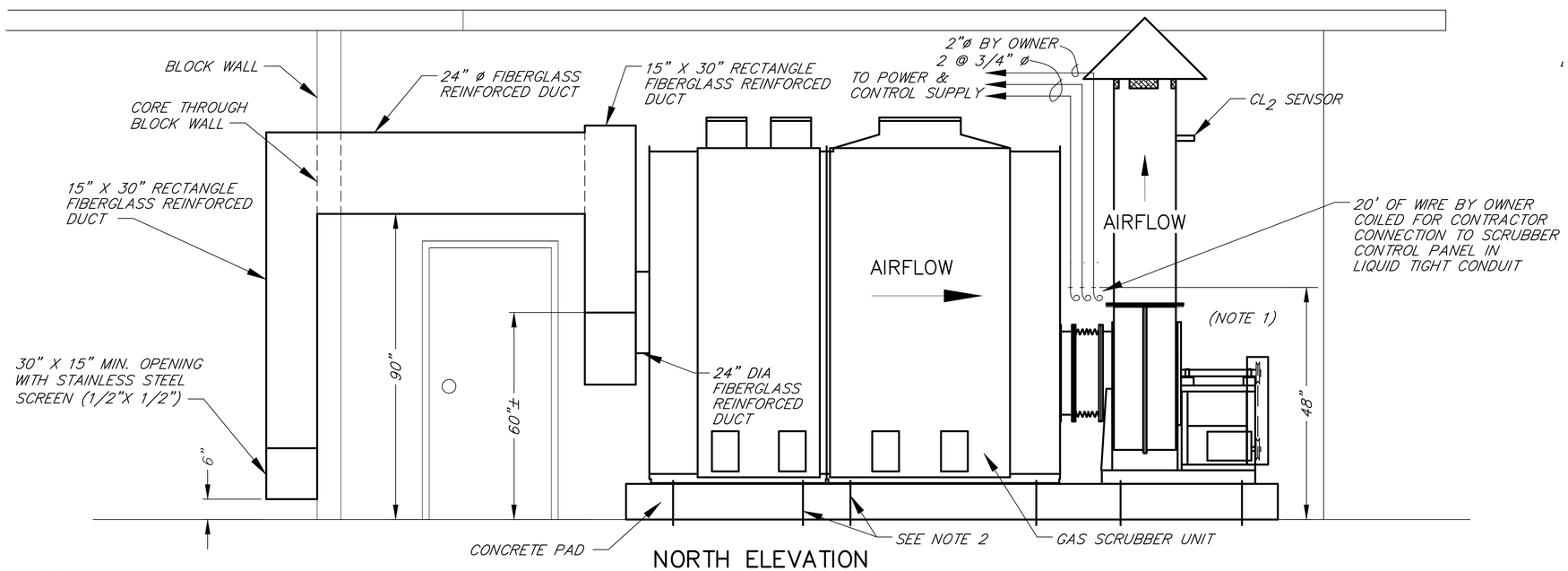

NORTH ELEVATION
GAS SCRUBBER

NOT TO SCALE

NOTE:

1. SCRUBBER CONTROL PANEL NOT SHOWN HERE FOR CLARITY. SEE SHEETS 4 AND 5 FOR DETAILS.
2. 1/2"ø X 16" LONG 316 STAINLESS STEEL ANCHOR BOLTS, 14 LOCATIONS, OR AS REQUIRED PER MANUFACTURER, EMBEDDED INTO EXISTING SLAB.

REGISTERED PROFESSIONAL ENGINEER
THOMAS ALAN FLUGUM
No. 42400
CIVIL
STATE OF CALIFORNIA

BAR LENGTH ON ORIGINAL DRAWING EQUALS ONE INCH. ADJUST SCALE ACCORDINGLY

S:\sanitation\airport | ■ sz\treatment plant\7589_Energ_Gas_Scrubbers\7589_General-1

NO.	DATE	REVISION	BY

SONOMA COUNTY WATER AGENCY

SCALE: NONE
DATE: 9/11/2012
DRAWN: JLW
REVIEWED:

AIRPORT-LARKFIELD-WIKIUP SANITATION ZONE

EMERGENCY GAS SCRUBBER SYSTEM
ELEVATIONS

FILE NAME: 7589_General-1.dwg
CONTRACT NUMBER: 70-706-7 #1
DRAWING NUMBER: A-1
SHEET 3 OF 5

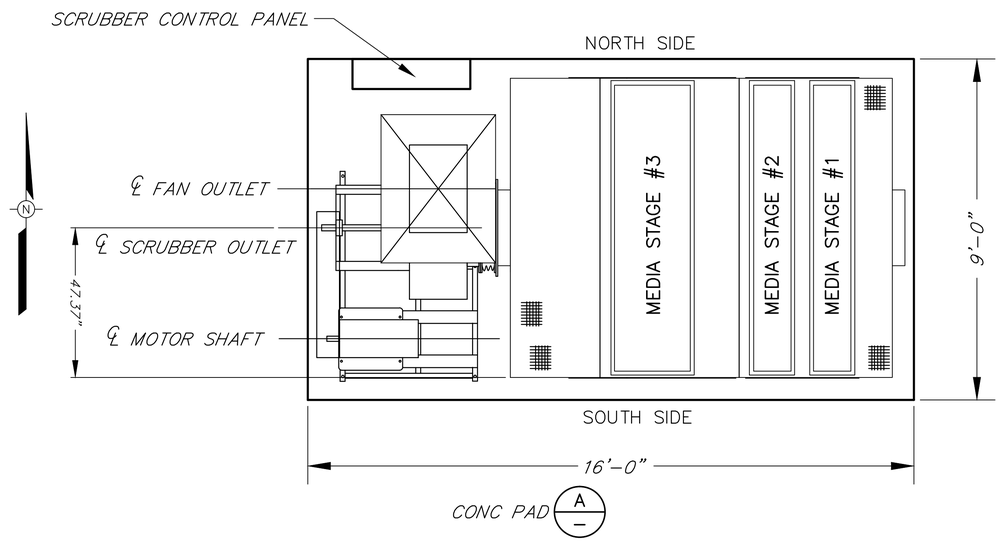

CONCRETE PAD PLAN

NOT TO SCALE

CONDUIT SCHEDULE							
TAG	CONDUIT	CABLES	VOLTAGE	CURRENT	ORIGIN	TERMINATION	REMARKS
C1	2"	3- #6, 1- #8	480 VAC	50 AMPERES	MCC SCRUBBER BUCKET	SCRUBBER CONTROL PANEL-LIQUID-TIGHT CONDUIT	SEE DRAWINGS A-1 & A-2
C2	3/4"	2-TWISTED PAIR #18			JUNCTION BOX IN TANK ROOM	SCRUBBER CONTROL PANEL-LIQUID-TIGHT CONDUIT	SEE DRAWINGS A-1 & A-2
C3	3/4"	1-TWISTED PAIR #18 1-MULTI-CONDUCTOR 6- #20			RTU CABINET IN CONTROL ROOM	SCRUBBER CONTROL PANEL-LIQUID-TIGHT CONDUIT	SEE DRAWINGS A-1 & A-2

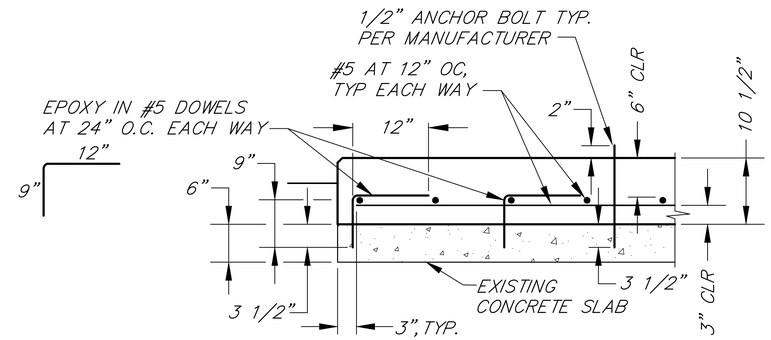

CONCRETE PAD SECTION A/–

NOT TO SCALE

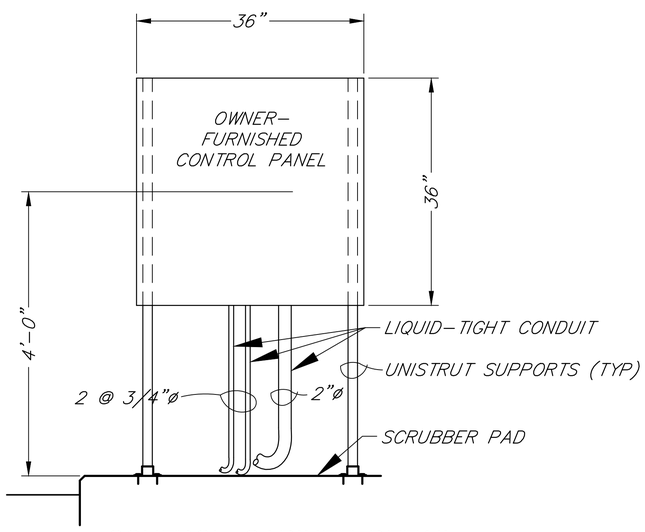

CONTROL CABINET DETAIL

NOT TO SCALE

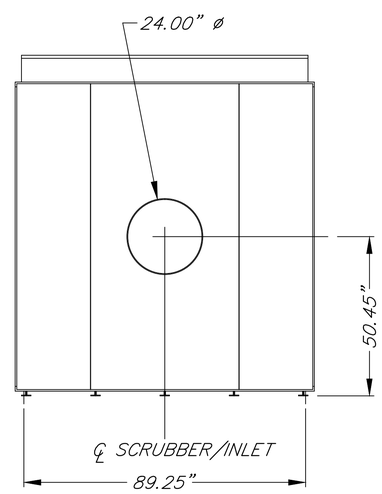

(SEE NOTE 2)

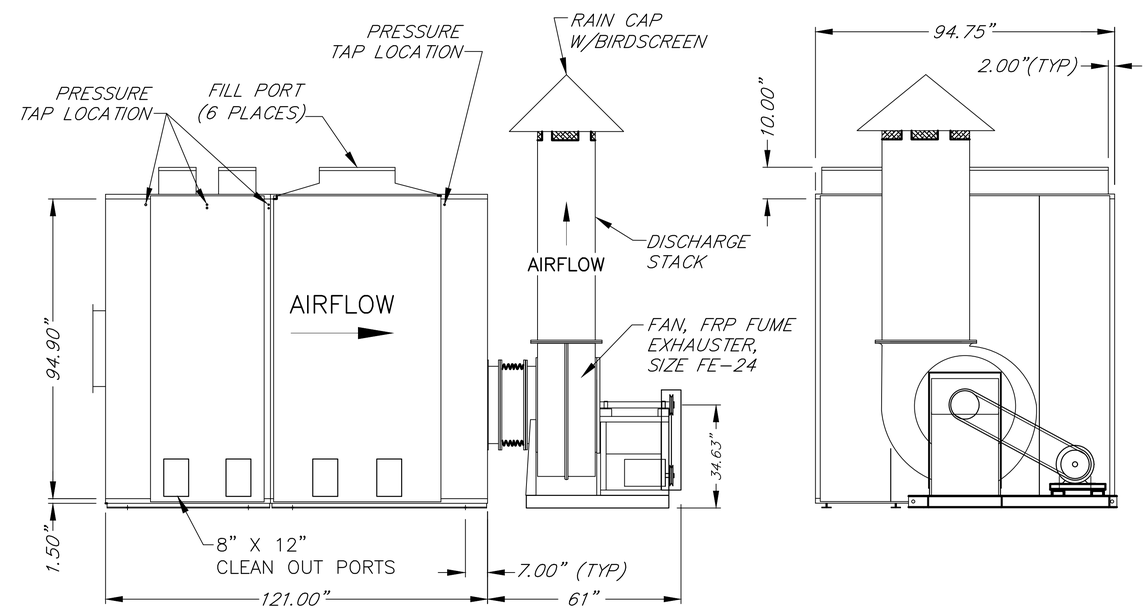

GAS SCRUBBER

NOT TO SCALE

NOTES:

1. INSTALL TWO SEALING LOCKNUTS & A BONDING BUSHING FOR EACH CONDUIT TERMINATED IN AN ENCLOSURE.
2. FIELD ROUTE CONDUIT AND WIRING
3. MOUNT CABINET USING UNISTRUT

BAR LENGTH ON ORIGINAL DRAWING EQUALS ONE INCH. ADJUST SCALE ACCORDINGLY

REGISTERED PROFESSIONAL ENGINEER
WILLIAM ALAN FLUGUM
No. 42000
CIVIL
STATE OF CALIFORNIA

NO.	DATE	REVISION	BY

SONOMA COUNTY WATER AGENCY

SCALE: NONE
DATE: 9/11/2012
DRAWN: JLW
REVIEWED:

AIRPORT-LARKFIELD-WIKIUP SANITATION ZONE

EMERGENCY GAS SCRUBBER SYSTEM
SCRUBBER DETAILS

FILE NAME: 7589_General-1.dwg
CONTRACT NUMBER: 70-706-7 #1
DRAWING NUMBER: A-2
SHEET 4 OF 5

S:\sanitation\airport t w sz\treatment plant\7589_Energ_Gas_Scrubbers\7589_General-1

LEGEND

- TERMINAL
- ABC — RELAY
- NORMALLY OPEN CONTACT
- NORMALLY CLOSED CONTACT
- PUSH-BUTTON
- SW-# — SWITCH

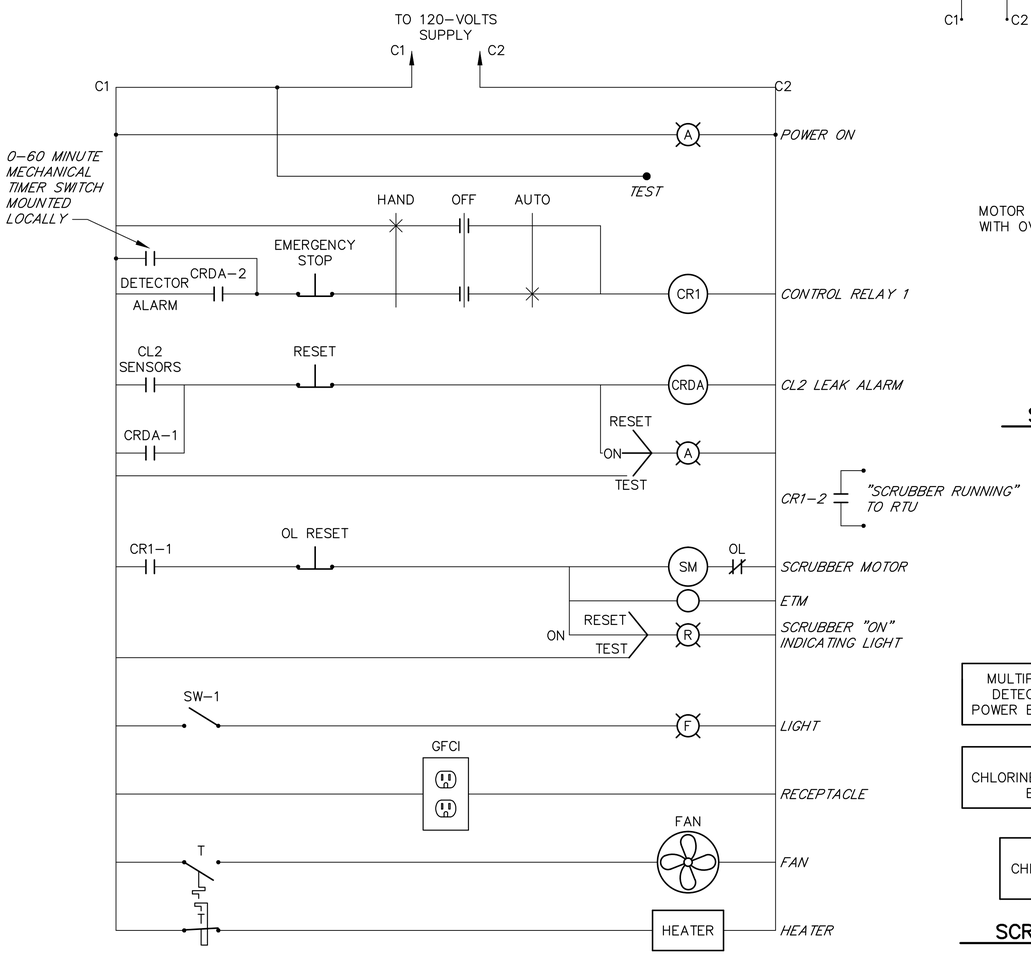

ANNUNCIATOR/CONTROLS

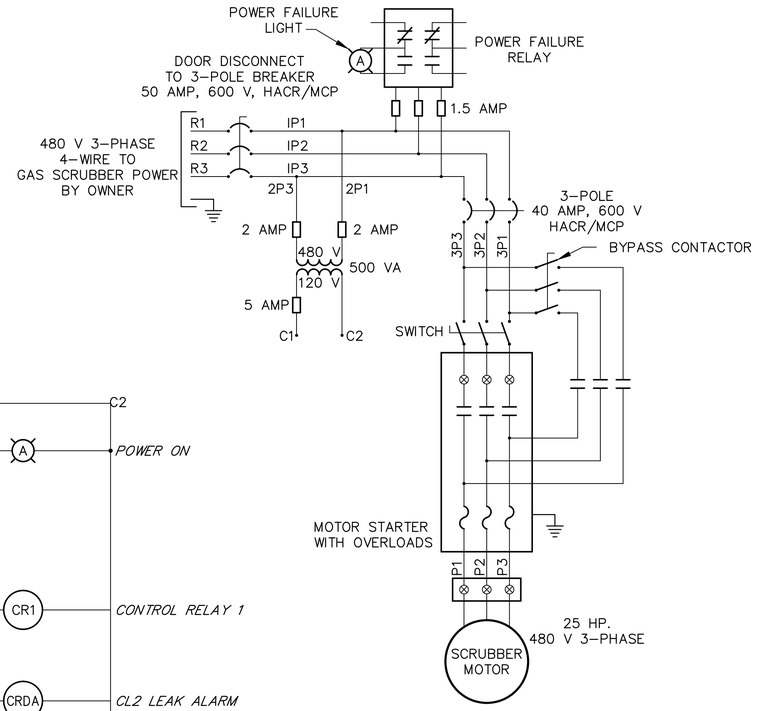

SCRUBBER ONE-LINE

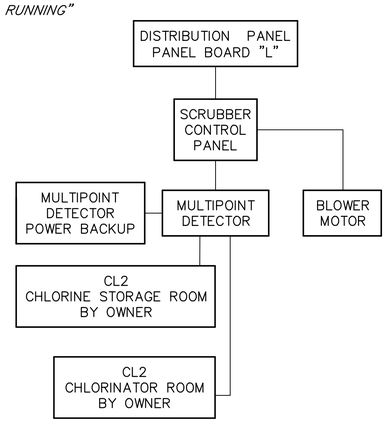

SCRUBBER BLOCK DIAGRAM

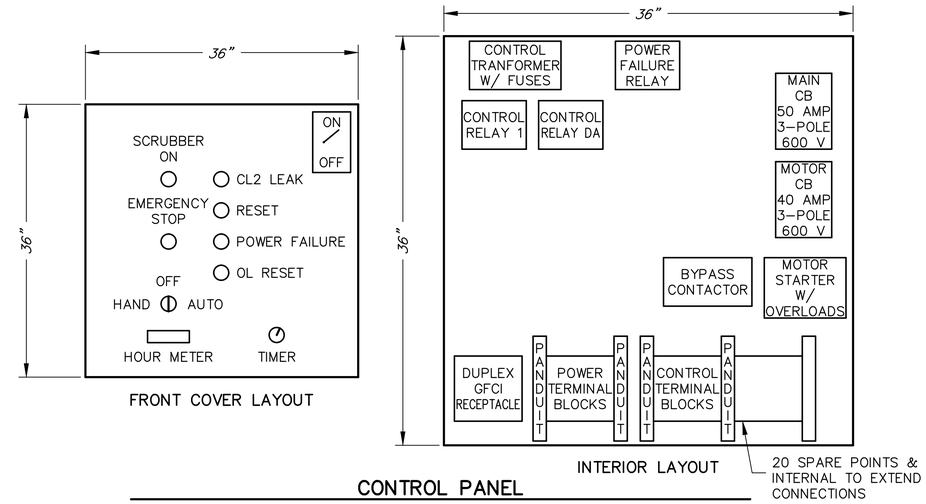

CONTROL PANEL

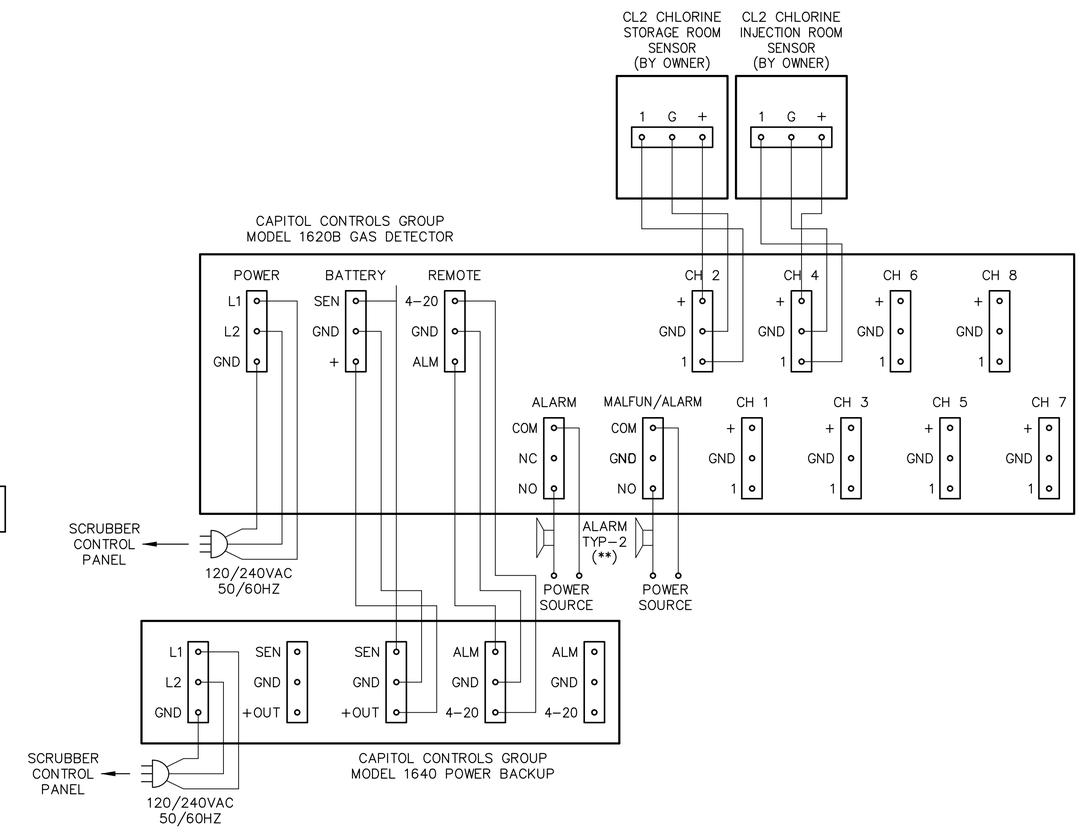

MULTIPOINT GAS DETECTOR, SENSOR, POWER BACK-UP AND REMOTE INDICATOR – WIRING DIAGRAM

OWNER FURNISHED EQUIPMENT
(CONTROL PANEL)

BAR LENGTH ON ORIGINAL DRAWING EQUALS ONE INCH. ADJUST SCALE ACCORDINGLY

REGISTERED PROFESSIONAL ENGINEER — JAMES C. FLESSNER — No. 10180 — ELECTRICAL — STATE OF CALIFORNIA

NO.	DATE	REVISION	BY

SONOMA COUNTY WATER AGENCY

SCALE: NONE | DATE: 9/11/2012 | DRAWN: JLW | REVIEWED:

AIRPORT-LARKFIELD-WIKIUP SANITATION ZONE

EMERGENCY GAS SCRUBBER SYSTEM
ELECTRICAL DETAILS

FILE NAME: 7589_General-1.dwg
CONTRACT NUMBER: 70-706-7 #1
DRAWING NUMBER: E-1
SHEET 5 OF 5

S:\sanitation\airport l ★ sz\treatment plant\7589_Energ_Gas_Scrubbers\7589_General-1