PAGE 1 Main Menu

12:34:56

CANCEL

Silence Alarm Horn

Coolant Pump Failed		12:34:56 P00
Oil Pressure Low		12:34:56 P00
Reduction Furnace Overtemp	Clrd	12:34:56 P00
Inbound Hopper Overweight	Clrd	12:34:56 P00

Main Menu

- Influent System (Sub Menu)
- Basin Water Flow Process Diagram
- Aeration System (Sub Menu)
- Activated Sludge System (Sub Menu)
- Drain Back
- Effluent System (Submenu)

View or Acknowledge Alarms

Get Page

12:34:56

CANCEL

Silence Alarm Horn

Coolant Pump Failed		12:34:56 P00
Oil Pressure Low		12:34:56 P00
Reduction Furnace Overtemp	Clrd	12:34:56 P00
Inbound Hopper Overweight	Clrd	12:34:56 P00

Aeration System (SubMenu)

- Aeration Air Flow Process Diagram
- Dissolved Oxygen Controllers, 2 pages
- Blower Starters, 2 pages
- Suction Valves, 2 pages
- Header Pressure Bias
- Header Pressure
- Cold Start
- Main Menu

View or Acknowledge Alarms

Get Page

PAGE 4 Aeration Air Flow Process Diagram

12:34:56

CANCEL

Prev | Next | Sub Menu | Main Menu | P&ID Next | Help

Coolant Pump Failed 12:34:56 P00

Oil Pressure Low 12:34:56 P00

Reduction Furnace Overtemp Clrd 12:34:56 P00

Inbound Hopper Overweight Clrd 12:34:56 P00

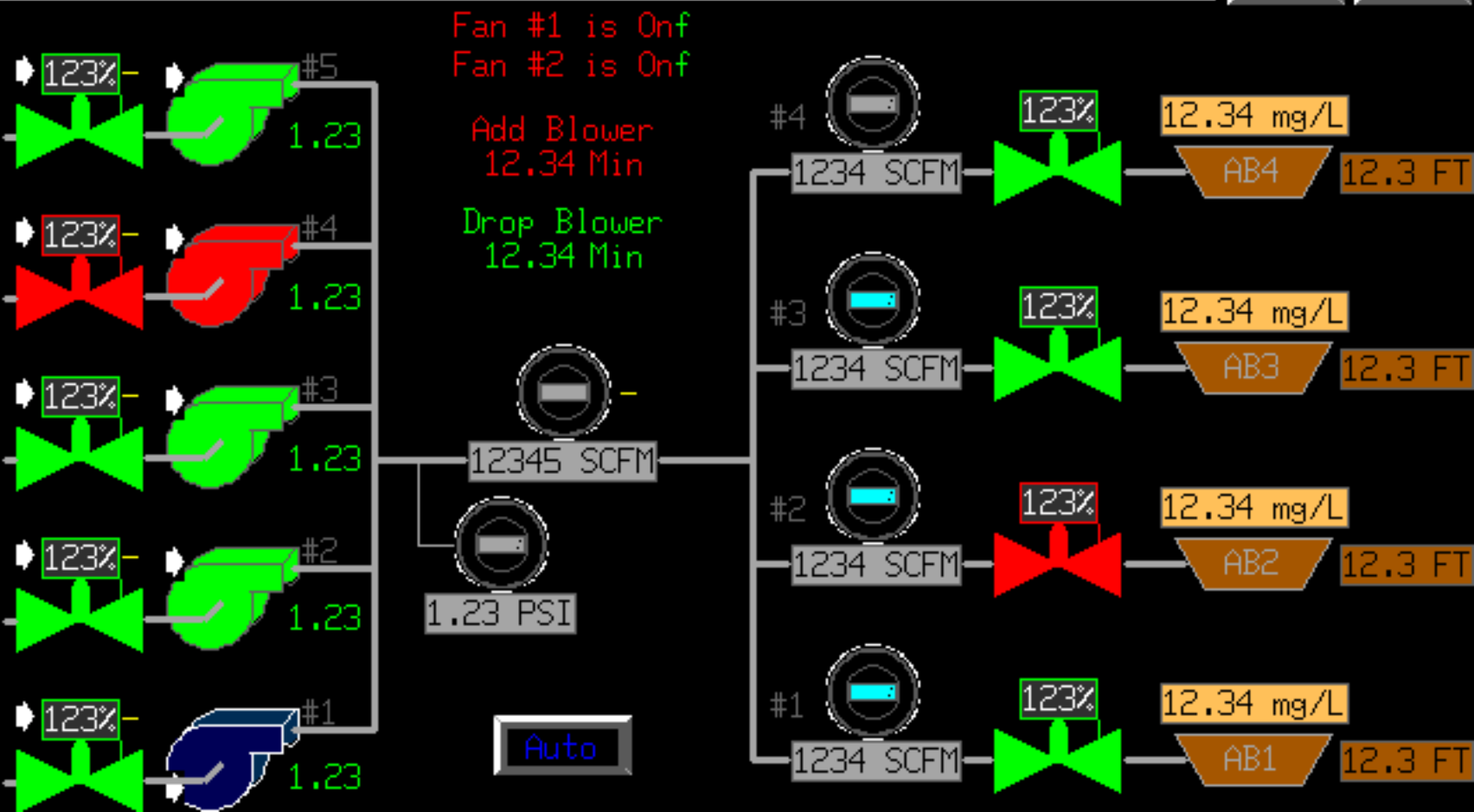

PAGE 5 Dissolved Oxygen Controllers, 1 of 2

12:34:56

CANCEL

Prev | Next | Sub Menu | Main Menu | P&ID | Help

Coolant Pump Failed 12:34:56 P00
Oil Pressure Low 12:34:56 P00
Reduction Furnace Overtemp Clrd 12:34:56 P00
Inbound Hopper Overweight Clrd 12:34:56 P00

Aer. Basin	#1	#2	#3	#4	Range
Control Select	1	2	3	4	0-5
D.O. Desired	1.23 mg/L	1.23 mg/L	1.23 mg/L	1.23 mg/L	0-5.00
D.O. Deadband	1.23 mg/L	1.23 mg/L	1.23 mg/L	1.23 mg/L	0-2.00
D.O. Reading	12.34 mg/L	12.34 mg/L	12.34 mg/L	12.34 mg/L	0-20.0
Valve Command	123.4 %	123.4 %	123.4 %	123.4 %	0-100
Manual	123 %	123 %	123 %	123 %	0-100
Valve Position	123.4 %	123.4 %	123.4 %	123.4 %	0-100
Flow	1234 SCFM	1234 SCFM	1234 SCFM	1234 SCFM	0-4000
Valve (L/R)	Remote	Remote	Local	Remote	
Sample Interval	123 Sec				0-600
Adj. Increment	1.2 %				0-9.0%

PAGE 6 Dissolved Oxygen Controllers, 2 of 2

12:34:56

CANCEL

Prev | Next | Sub Menu | Main Menu | P&ID | Help

Coolant Pump Failed 12:34:56 P00
Oil Pressure Low 12:34:56 P00
Reduction Furnace Overtemp Clrd 12:34:56 P00
Inbound Hopper Overweight Clrd 12:34:56 P00

Aer. Basin	#1	#2	#3	#4	Range
Valve Auto Max	123 %	123 %	123 %	123 %	0-100
Valve Auto Min	123 %	123 %	123 %	123 %	0-100
Flow Max	1234 SCFM	1234 SCFM	1234 SCFM	1234 SCFM	0-4000
Flow Min	1234 SCFM	1234 SCFM	1234 SCFM	1234 SCFM	0-4000
High Alarm	1.23 mg/L	1.23 mg/L	1.23 mg/L	1.23 mg/L	0-9.99
High Alarm	Enabled	Enabled	Disabled	Enabled	
Low Alarm	1.23 mg/L	1.23 mg/L	1.23 mg/L	1.23 mg/L	0-9.99
Low Alarm	Enabled	Enabled	Disabled	Enabled	

PAGE 7 Blower Staging

12:34:56

CANCEL

Prev | Next | Sub Menu | Main Menu | P&ID | Help

Coolant Pump Failed 12:34:56 P00

Oil Pressure Low 12:34:56 P00

Reduction Furnace Overtemp Clrd 12:34:56 P00

Inbound Hopper Overweight Clrd 12:34:56 P00

Sequence	Lead	Lag1 Duplicate!	Lag2	Lag3	Lag4 Duplicate!	Range
Blower Stage	3	1	2	4	1	1-5
Blower Sequence	3	1 *	2 *	4 *	5 *	1-5
Flow Rate	12345 SCFM	12345 SCFM	12345 SCFM	12345 SCFM	12345 SCFM	0-15000
Air Flow Stops		Lowest	Low	High	Highest	
Blower Stops	MessageMessageMessageM					

Legend: 1..."Blower #1"
2..."Blower #2"
3..."Blower #3"
4..."Blower #4"
5..."Blower #5"

INITIATION NOT ALLOWED
WHILE ANY BLOWER IS
RUNNING
PLEASE STOP ALL BLOWERS
AND TRY AGAIN.

Seq Init

PAGE 8 Blowers

12:34:56

CANCEL

Prev | Next | Sub Menu | Main Menu | P&ID | Help

Coolant Pump Failed		12:34:56 P00
Oil Pressure Low		12:34:56 P00
Reduction Furnace Overtemp	Clrd	12:34:56 P00
Inbound Hopper Overweight	Clrd	12:34:56 P00

Blower Number	#1	#2	#3	#4	#5	
OIU Mode (HOA)	Auto	Off	Auto	Auto	Auto	H O A
Auto Permissive	Available	NA/Timing	NA/Timing	NA/Timing	Available	
Start Delay	1.2 Min	1.2 Min	1.2 Min	1.2 Min	1.2 Min	0-5.0
Fail by PLC	Failed	Failed	Failed	Failed	Failed	
Reset Fail/PLC	Reset	Reset	Reset	Reset	Reset	Reset
Auto Command	Called	Called	Called	Called	Called	
Stop Delay	1.2 Min	1.2 Min	1.2 Min	1.2 Min	1.2 Min	0-5.0
SSS (HOA)	Auto	Hand	Hand	Off	Auto	
SSS Ready	Ready	Ready	Ready	Ready	Ready	
SSS Operation	Stopped	Running	Running	Stopped	Running	
SSS Fail	Failed	Failed	Failed	Failed	Failed	

PAGE 9 Suction Valves, 1 of 2

12:34:56

CANCEL

Prev | Next | Sub Menu | Main Menu | P&ID | Help

Coolant Pump Failed 12:34:56 P00
Oil Pressure Low 12:34:56 P00
Reduction Furnace Overtemp Clrd 12:34:56 P00
Inbound Hopper Overweight Clrd 12:34:56 P00

Suction Valve	#1	#2	#3	#4	#5	
OIU Mode (HOA)	Auto	Auto	Auto	Auto	Auto	H O A
Valve (L/R)	Remote	Local	Remote	Remote	Remote	
Fail by PLC	Failed	Failed	Failed	Failed	Failed	
Reset Fail/PLC	Reset	Reset	Reset	Reset	Reset	Reset
Valve Auto Max	123 %	123 %	123 %	123 %	123 %	0-100
Valve Auto Min	123 %	123 %	123 %	123 %	123 %	0-100
Start Position	123 %	123 %	123 %	123 %	123 %	0-100
Stop Position	123 %	123 %	123 %	123 %	123 %	0-100
Max/Mn Open	Data	Range	Data	Range		
Max (Add Blwr)	123 %	0-100	12.3 Min	0-99.9		
Mn (Drop Blwr)	123 %	0-100	12.3 Min	0-99.9		

PAGE 10 Suction Valves, 2 of 2

12:34:56

CANCEL

Prev | Next | Sub Menu | Main Menu | P&ID | Help

Coolant Pump Failed 12:34:56 P00

Oil Pressure Low 12:34:56 P00

Reduction Furnace Overtemp Clrd 12:34:56 P00

Inbound Hopper Overweight Clrd 12:34:56 P00

Suction Valve	#1	#2	#3	#4	#5	
Amps, Desired	123 Amps	123 Amps	123 Amps	123 Amps	123 Amps	0-250
Blower Amps, PV	123 Amps	123 Amps	123 Amps	123 Amps	123 Amps	0-250
PID Error	12345	12345	12345	12345	12345	~9999
Gain	⬆1234.5678	⬆1234.5678	⬆1234.5678	⬆1234.5678	⬆1234.5678	0-0.99
Reset Time, ti	⬆123456 mSec	⬆123456 mSec	⬆123456 mSec	⬆123456 mSec	⬆123456 mSec	0-9999
Rate Time, td	⬆123456 mSec	⬆123456 mSec	⬆123456 mSec	⬆123456 mSec	⬆123456 mSec	0-9999
Delay, td lag	⬆123456 mSec	⬆123456 mSec	⬆123456 mSec	⬆123456 mSec	⬆123456 mSec	0-9999
Manual	⬆123 %	⬆123 %	⬆123 %	⬆123 %	⬆123 %	0-100
Valve Command	123 %	123 %	123 %	123 %	123 %	0-100
Valve Position	123 %	123 %	123 %	123 %	123 %	0-100

PAGE 11 Header Pressure Bias

12:34:56

CANCEL

Prev | Next | Sub Menu | Main Menu | P&ID | Help

Coolant Pump Failed	12:34:56 P00
Oil Pressure Low	12:34:56 P00
Reduction Furnace Overtemp	Clrd 12:34:56 P00
Inbound Hopper Overweight	Clrd 12:34:56 P00

Bias From AB Most Open Valve

MOV / Header	Data	Range
Header Inc Adj	1.23 PSI	0-0.99
Adj Interval	1.2 Min	0-9.9
MOV, Desired	123 %	0-100.0
Most Open Valve	123 %	0-100.0

Enabled

Bias From AB Level

MOV / Header	Data	Range
Header Inc Adj	0.04 PSI	Per .1FT
Average Level	12.34 FT	0-4.00

Enabled

PAGE 12 Header Pressure

12:34:56

CANCEL

Prev | Next | Sub Menu | Main Menu | P&ID | Help

Coolant Pump Failed 12:34:56 P00

Oil Pressure Low 12:34:56 P00

Reduction Furnace Overtemp Clrd 12:34:56 P00

Inbound Hopper Overweight Clrd 12:34:56 P00

Parameter	Data	Range	Parameter	Data	Range
Pressure, Set	12.34 PSI	0-15.0	Pressure Max	1.23 PSI	0-9.99
Pressure, PV	12.34 PSI	0-15.0	Pressure Min	1.23 PSI	0-9.99
PID Error	12.345	~9.9999	High PSI Alarm	12.34 PSI	0-15.0
Gain	1234.5678	0-0.99	High PSI Reset	12.34 PSI	0-15.0
Reset Time, ti	123456mSec	0-9999	Alarm High PSI	Disabled	
Rate Time, td	123456mSec	0-9999	Low PSI Reset	12.34 PSI	0-15.0
Delay, td lag	123456mSec	0-9999	Low PSI Alarm	12.34 PSI	0-15.0
Amps, Command	123 Amps	0-250	Alarm Low PSI	Enabled	
Amps, Max	123 Amps	0-250			
Amps, Min	123 Amps	0-250			

Aeration System

CAUTION

Activation of Touchscreens With

Foreign Objects May Cause

Damage To The Front Screen

Surface Reducing Screen Visibility

ZSI, Incorporated Sonoma, California (707) 996 - 5432