SONOMA COUNTY WATER AGENCY

FAX

FILE:PROJ/SVCSD TERTIARY TREATMENT
UPGRADE PROJECT 70-12-7 #30

DATE: **JUNE 19, 2006**

TO: **PLANHOLDERS**

FROM: **DALE ROBERTS, PROJECT MANAGER**

SUBJECT: **SONOMA VALLEY COUNTY SANITATION DISTRICT (SVCSD) TERTIARY TREATMENT UPGRADE PROJECT - SUBSTITUTION REQUEST FOR PRIME PUMP VERTICAL TURBINE PUMPING EQUIPMENT**

Attached is the completed Document 00660 (Substitution Request Form) for the subject substitution request. SVCSD has determined that the Prime Pump is not accepted as noted below.

Engineer does not have experience with Prime Pump, and did not receive positive enough feedback from the references that were contacted to consider them "equal" to those manufacturers listed in the Project Manual. Engineer has determined that the pumps listed in the Project Manual are best suitable for this application.

DOCUMENT 00660

SUBSTITUTION REQUEST FORM

During Bid Period To:	After Award of Contract To:
Dale Roberts, P.E. Sonoma Valley County Sanitation District Fax: 707-524-3782	Mathew Vail, Construction Management Sonoma Valley County Sanitation District Fax: 707-524-3791

Project: Tertiary Treatment Plant Upgrade

Bidder: N/A

Subcontractor/Supplier: Prime Pump Corp.

Drawing Sheet Reference/Detail No: Sheet 31A of 64

The undersigned Bidder submits for consideration the following equipment instead of the specified item for the above Project:

Section	Paragraph	Specified Item
11072		Pumping Equipment: Vertical Turbine

Proposed Substitution:

The undersigned encloses the information required herein. If this Document 00660 is being submitted by a Bidder wishing to use "equal" item(s) as provided in Document 00200 (Instructions to Bidders), the undersigned Bidder must also enclose the technical information (other than cost) otherwise required for a post-Award of Contract Request for Substitution ("RFS") under Section 01600 (Product Requirements). However, if this Document 00660 is being submitted under provisions of Contract Documents after Award of Contract, the undersigned Contractor must include all information required under Section 01600 (Product Requirements).

The undersigned has (a) attached manufacturer's literature, including complete technical data and laboratory test results, if applicable, (b) attached an explanation of why proposed substitution is a true equivalent to specified item, (c) included complete information on changes to Contract Documents that the proposed substitution will require for its proper installation, and (d) filled in the blanks below:

A Does the substitution affect dimensions shown on Drawings? (If yes, please explain)

NO

B. Are the manufacturer's guarantees and warranties on the proposed substitution items identical to those on the specified items? If there are differences, please specify each and every difference in detail.

Yes

C. What effect does the substitution have on other contractors, trades, or suppliers?

None

D. What are the differences between the proposed substitution and the specified item? If proposed substitution has a color or pattern, provide a color board showing proposed substitution in relation to the other adjacent colors and patterns.

None

E. Will granting the requested substitution cause any schedule delay? (If yes, please explain)

No

The undersigned Bidder certifies that the function, appearance, and quality of the proposed substitution are equivalent or superior to those of the specified item.

Submitted by:

Bidder

Signature

A. J. Keyes
Name

660 South 31st Street
Address

Richmond, CA 94804
City/State/Zip

Telephone: (510) 620-0278

Date: 6/7/06

For Use by Owner:

___ Accepted ___ Accepted as Noted

X Not Accepted ___ Received Too Late

By: _____
Owner's Representative

Date: 19 JUNE '06

Remarks: SEE COMMENTS TO PLANHOLDERS

END OF DOCUMENT

P.O. Box 8526, Berkeley, CA 94707
660 South 31st St., Richmond, CA 94804
Tele: 510-620-0278/0950
fax: 510-620-0715

Prime Pump

Fax

To:	Dale Roberts, P.E.	From:	Al Keyes
	Sonoma Valley County Sanitation District		Prime Pump
Phone:	707-547-1979	Pages:	
Fax:	707-524-3782	Date:	6/7/06
Re:	Tertiary Treatment Plant Upgrade		

We are forwarding a "Substitution Request Form" for your review and consideration.

Should you have any questions, please do not hesitate to contact us.

Al Keyes

DOCUMENT 00660

SUBSTITUTION REQUEST FORM

During Bid Period To:	After Award of Contract To:
Dale Roberts, P.E. Sonoma Valley County Sanitation District Fax: 707-524-3782	Mathew Vail, Construction Management Sonoma Valley County Sanitation District Fax: 707-524-3791

Project: Tertiary Treatment Plant Upgrade

Bidder: N/A

Subcontractor/Supplier: Prime Pump Corp.

Drawing Sheet Reference/Detail No: Sheet 31A of 64

The undersigned Bidder submits for consideration the following equipment instead of the specified item for the above Project:

Section	Paragraph	Specified Item
11072		Pumping Equipment: Vertical Turbine

Proposed Substitution:

The undersigned encloses the information required herein. If this Document 00660 is being submitted by a Bidder wishing to use "equal" item(s) as provided in Document 00200 (Instructions to Bidders), the undersigned Bidder must also enclose the technical information (other than cost) otherwise required for a post-Award of Contract Request for Substitution ("RFS") under Section 01600 (Product Requirements). However, if this Document 00660 is being submitted under provisions of Contract Documents after Award of Contract, the undersigned Contractor must include all information required under Section 01600 (Product Requirements).

The undersigned has (a) attached manufacturer's literature, including complete technical data and laboratory test results, if applicable, (b) attached an explanation of why proposed substitution is a true equivalent to specified item, (c) included complete information on changes to Contract Documents that the proposed substitution will require for its proper installation, and (d) filled in the blanks below:

A. Does the substitution affect dimensions shown on Drawings? (If yes, please explain)

NO

B. Are the manufacturer's guarantees and warranties on the proposed substitution items identical to those on the specified items? If there are differences, please specify each and every difference in detail.

Yes

C. What effect does the substitution have on other contractors, trades, or suppliers?

None

D. What are the differences between the proposed substitution and the specified item? If proposed substitution has a color or pattern, provide a color board showing proposed substitution in relation to the other adjacent colors and patterns.

None

E. Will granting the requested substitution cause any schedule delay? (If yes, please explain)

NO

The undersigned Bidder certifies that the function, appearance, and quality of the proposed substitution are equivalent or superior to those of the specified item.

Submitted by:

Bidder

Signature

A. J. Keyes
Name

660 South 31st Street
Address

Richmond, CA 94804
City/State/Zip

Telephone: (510) 620-0278

Date: 6/7/06

For Use by Owner:

___ Accepted ___ Accepted as Noted

___ Not Accepted ___ Received Too Late

By: _____
Owner's Representative

Date: _____

Remarks: _____

END OF DOCUMENT

PRIME PUMP CORPORATION
Description of Equipment
TERTIARY TREATMENT PLANT
SONOMA VALLEY COUNTY SANITATION DISTRICT
Specification 11072
PUMPING EQUIPMENT: VERTICAL TURBINE (LINESHAFT)

FILTER INFLUENT PUMPS FIP-101, FIP-102, FIP-103, FIP-104

Vertical Turbine Pumps, model K20HC with cast iron bowls and suction bell, bronze impellers, 304SS replaceable wear rings on impeller and bowl, bronze bowl bearings, 416SS lineshaft, 304 stainless steel bolting. Impellers to be keyed and statically and dynamically balanced. Pumps to have maximum column lengths and maximum shaft lengths of 10 feet with 5 ft. maximum top and bottom lengths. Lineshaft bearings to be rubber. Bottom bearing to be grease packed. Pumps to be sandblasted and coated with high solids epoxy, 15 mdft per Section 09905, inside and out. Pumps to be mounted to 12" 150# flanged fabricated steel discharge head assembly with mitred elbow. Each pump to be performance tested and vibration tested. Seismic and lateral natural frequency calculations to be provided. Pumps to be driven by 30 hp, WP-I, 460 volt vertical hollow shaft motors, premium efficiency, inverter duty, 1.15 service factor, encapsulated windings, non reverse ratchet, and stainless steel drains.

PRIME PUMP COMPANY
Richmond, California
PREDICTED PERFORMANCE CURVE
SONOMA VALLEY COUNTY SANITATION DISTRICT
FILTER INFLUENT PUMPS
886 RPM

TYPE PUMP - K20HC 1 Stg
DESIGN: 3,700 GPM @ 26' TDH
700(MIN.) @ 14' TDH
Thrust-Design: 858 lb.
Thrust-S/O: 1485 lb.
MATERIAL:
Bowl - Cast Iron / Coated
Impeller - Bronze
Drawn by:AJK 06-06-06

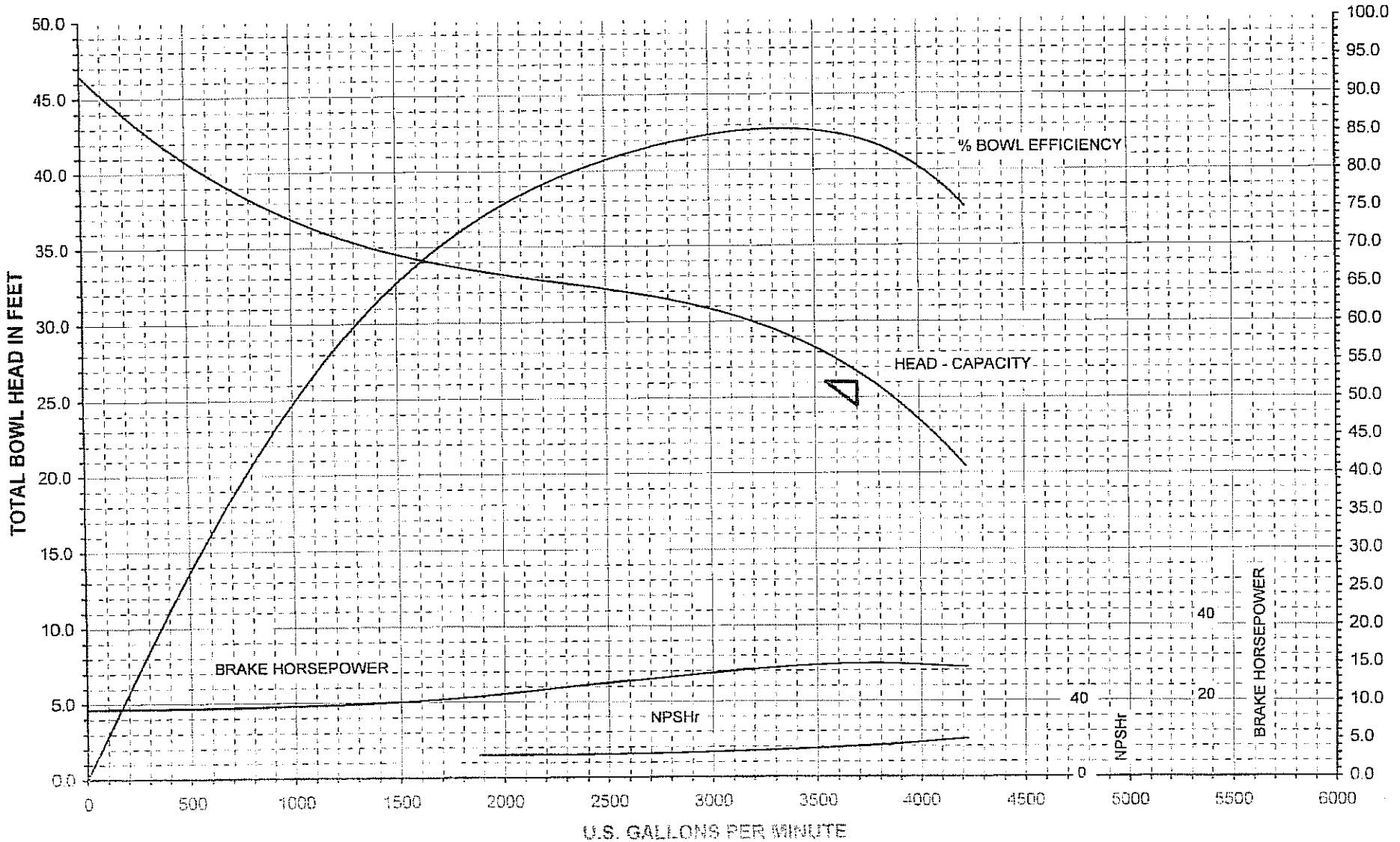

PRIME PUMP COMPANY
Richmond, California
PREDICTED PERFORMANCE CURVE
SONOMA VALLEY COUNTY SANITATION DISTRICT
FILTER INFLUENT PUMPS
530 RPM

TYPE PUMP - K20HC 1 Stg
DESIGN: 3,700 GPM @ 26' TDH
700(MIN.) @ 14 'TDH
Thrust-Design: 858 lb.
Thrust-S/O: 1485 lb.
MATERIAL:
Bowl - Cast Iron / Coated
Impeller - Bronze
Drawn by:AJK 06-06-06

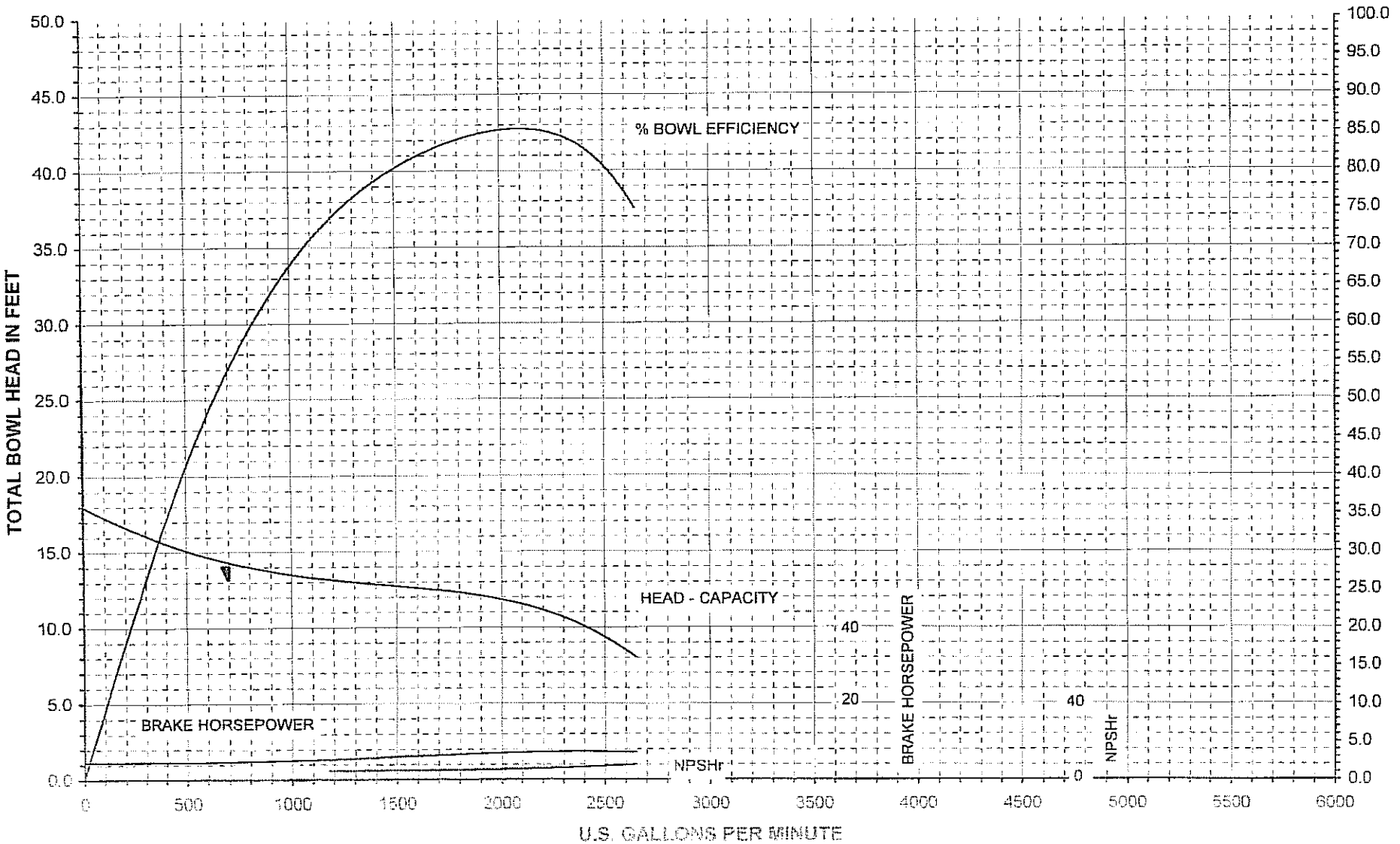

07/08/2006 14:39 5106200715 PAGE 06/14

PRIME PUMP CORP.

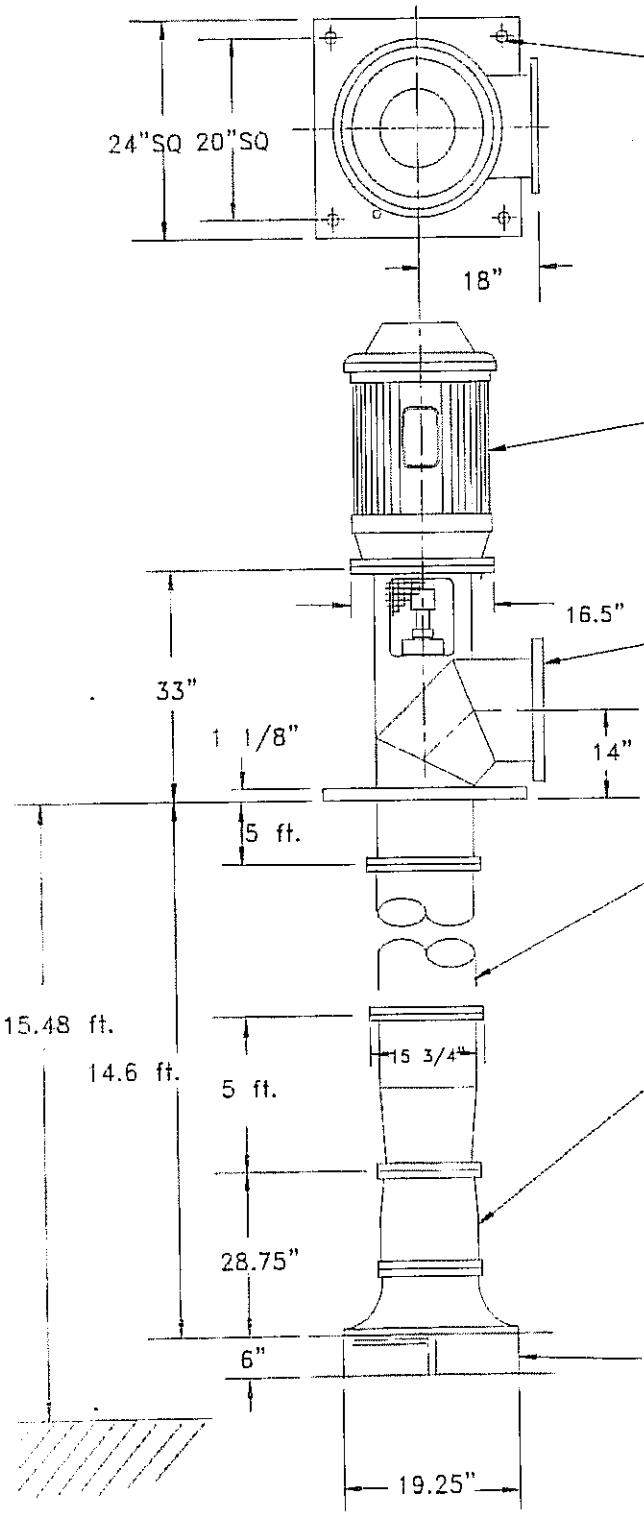

4– 1" DIA. HOLES

CONDITIONS

U.S. GALLONS PER MINUTE: 3,700
TOTAL DYNAMIC HEAD: 26 ft.
LIQUID: water
SPECIFIC GRAVITY: 1.0

VERTICAL HOLLOW SHAFT MOTOR
HP: 30 PHASE: 3 CYCLE: 60
VOLTAGE: 460 RPM: 900
ENCLOSURE: WP-I

12" FLANGED SURFACE DISCHARGE ELBOW
LINED AND COATED WITH AMERLOCK 400

12" FLANGED COLUMN, SCHED 40 STEEL
1 1/2" diameter lineshaft w/rubber bearings in steel retainers.
Flange bolting: ANSI B28.2.1, 304SS or 316SS

MODEL K20HC

Pump Weight: 2024 lbs.
Motor Weight: 730 lbs.

CUSTOMER:

TERTIARY TREATMENT PLANT UPGRADE
SONOMA VALLEY COUNTY SANITATION
Engr: HDR

Anti-Vortex Baffle, steel, coated with Amerlock 400

ajk 6/6/06

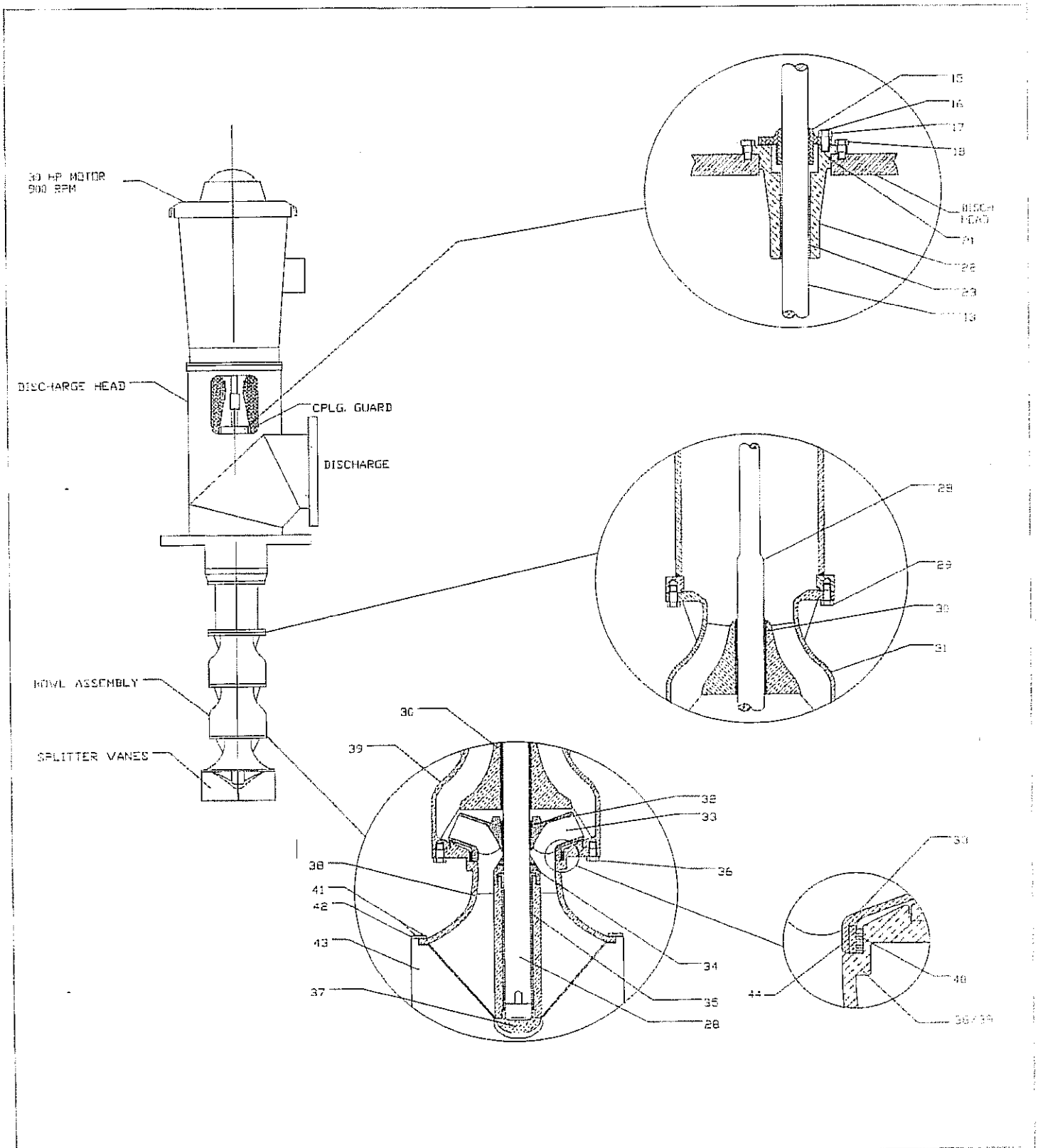

CUSTOMER: OVERAA CONSTRUCTION

PROJECT: SONOMA VALLEY COUNTY SANITATION

PUMP NAME: FILTER INFLUENT PUMPS

P.O.#:

QTY:

PRIME PUMP

REV.	DESCRIPTION	BY	DATE

CROSS SECTIONAL DRAWING

SCALE NONE | SHEET

DWN BY: | DATE

CHKD BY: | DATE

DRAWING NO.

SONOMA

SONOMA VALLEY COUNTY SANITATION DISTRICT
FILTER INFLUENT PUMPS
TERTIARY TREATMENT PLANT UPGRADE

REF. #	DESCRIPTION	QTY	MATERIAL
	LINESHAFT BEARINGS	3	RUBBER
15	ASSEMBLY-PACKED STUFFINGBOX w/BLEEDOFF & GREASE FITTING w/GRAPHITED ACRYLIC PACKING	1	BRONZE/416SS
16	STUD	4	304SS GR. F593G
17	NUT NC	4	304SS GR F593G
18	CAPSCREW	6	304SS GR F593G
21	O-RING	1	BUNA
22	SEAL HOUSING	1	CAST IRON
23	SEAL HOUSING BEARING	1	B505 932 BRZ
28	BOWL SHAFT	1	A582 416SS
29	BOLT BOWL TO HEAD	12	304SS GR F593G
30	BEARING BOWL	1	B505 932 BRZ
31	BOWL TOP DIFUSSER CASE	1	A48 CL30 CI
32	SPLIT RING AND KEY-IMPELLER TO SHAFT	1	416SS
33	IMPELLER	1	C83600 BRZ
34	SAND COLLAR	1	B505 932 BRZ
35	SUCTION BELL BEARING	1	B505 932 BRZ
36	BOLT BOWL	12	304SS GR.F593G
37	SUCTION BELL END CAP	1	A48 CL30 CI
38	SUCTION BELL	1	A48 CL30 CI
39	SERIES BOWL	1	A48 CL30 CI
40	BOWL WEAR RING	1	304SS
41	CAP SCREW	8	304SS
42	CLIP, STRAINER/SPLITTER VANE	4	STEEL COATED
43	SPLITTER VANE ASEMBLY	1	STEEL
44	IMPELLER WEAR RING	1	304SS
45	SHAFT SLEEVE-LINESHAFT	1	416SS

PRIME PUMP

REV 0

EMERSON.
Motor Technologies

Emerson Motor Technology
CIM – Specialty Division
8100 W. Florissant Ave.
St. Louis, MO 63136
PH: 314-595-8301 FAX: 314-595-8440

MOTORS

Date: 6/6/06

Quotation: **D-15706AJK1**

Customer: **Prime Pump**
Attention: Al Keyes
Fax: E-Mail
Project: Sonoma Valley

Issued by: Bill Young

Cc:

QUOTATION & ORDER MEMORANDUM

CURRENT	PHASE	CYCLES	VOLTS
AC	3	60	460V

ITEM	QTY	H.P.	FRAME	SPEED	WEIGHT	TYPE
1	4	30	364TP	900	730	RUSI

DESCRIPTION:

WP-1 VHS Motor: Premium Efficient Inverter Duty w. 1.15SF & Class F Insulation. The motor is suitable for a 40 degree C ambient @ 3300 feet elevation. Special features include NRR, Spare Bearings, VPI-2000 Encapsulation Winding Treatment, Oversized Nema 4 Cast Iron Main Outlet Box w. GND, and S.S. Drains. The motor is rated for 50-K of L-10 bearing life based on 780 (lbs.) of downthrust

Lead-time: 8 to 10 weeks production time.

Freight: PPB Collect or 3rd Party

Net 30 days. This quotation expires in 30 days.

F.O.B. Factory

F.O.B. SHIPPING POINT: All contracts and quotations are subject to our standard terms and conditions and acceptance at our main office, St. Louis, Missouri, and are contingent upon strikes, fires, accidents, and other delay unavoidable or beyond our control. In the event of a change in the company's price, the price on units unshipped will be the price in effect on the date of shipment, or as provided in our published price policy. Copy of this policy will be furnished upon request. This quotation expires in 60 days. Time may be extended with our written approval.

OPERATING CHARACTERISTICS
WEATHER PROTECTED I
HOLLOSHAFT & SOLID SHAFT, HIGH THRUST, PREMIUM EFFICIENT
20 - 250 HP TYPES RUS & RVS-4

WP1
HIGH THRUST
PREM EFF
460V

200, 230, 460 & 575 VOLTS / 60 HERTZ, 3 PHASE

HP	FULL LOAD RPM	% EFFICIENCY NEMA NOM.	GUAR. MIN.	3/4 LOAD	1/2 LOAD	% POWER FACTOR FULL LOAD	3/4 LOAD	1/2 LOAD	CURRENT AMPS AT 460 VOLTS FULL LOAD	LOCKED ROTOR	NEMA CODE LETTER	TORQUE FULL LOAD (LB. FT.)	LOCKED ROTOR % OF FULL LOAD	BREAK DOWN % OF FULL LOAD	MAX KVAR	SOUND PRESSURE AT 3 FT. DBA
20	887	92.4	91.0	92.7	92.2	78.1	73.3	63.2	25.9	145.0	G	118.4	125	200	7.7	65
25	1191	93.6	92.4	93.5	92.7	80.6	77.4	69.1	31.0	182.5	G	110.2	135	200	7.8	65
	886	92.4	91.0	92.9	92.5	78.0	73.4	63.2	32.5	182.5	G	148.2	125	200	9.6	65
30	1191	93.6	92.4	93.5	92.8	76.9	74.5	64.6	38.0	217.5	G	132.3	135	200	11	65
	886	93.0	91.7	93.6	93.4	79.8	76.5	68.1	37.8	217.5	G	177.8	125	200	9	65
40	1782	94.5	93.6	94.4	93.6	87.8	86.4	81.3	45.1	290.0	G	117.9	140	200	8.0	65
	1190	93.6	92.4	93.9	93.4	79.5	75.7	66.3	50.3	290.0	G	176.5	135	200	14	65
	884	92.4	91.0	93.0	92.9	77.8	73.2	62.7	52.1	290.0	G	237.6	125	200	16	65
50	3564	92.4	91.0	92.1	90.5	88.3	87.9	84.3	57.5	362.5	G	73.7	120	200	8.9	75
	1780	94.5	93.6	94.6	94.1	87.7	86.2	80.9	56.5	362.5	G	147.5	140	200	10	65
	1189	93.6	92.4	93.9	93.5	77.8	73.3	63.1	64.3	362.5	G	220.9	135	200	19	65
	892	93.6	92.4	93.9	93.4	74.5	68.9	57.8	67.1	362.5	G	294.4	125	200	22	65
60	3560	92.4	91.0	92.3	91.1	87.2	86.5	82.3	70.0	435.0	G	88.5	120	200	12	75
	1783	95.0	94.1	95.2	94.8	87.2	85.9	80.9	67.8	435.0	G	176.7	140	200	12	65
	1190	95.0	94.1	95.1	94.7	86.4	84.8	79.3	68.4	435.0	G	264.8	135	200	12	65
	890	93.0	91.7	93.5	93.1	73.7	68.3	57.2	82.0	435.0	G	354.1	125	200	27	65
75	3559	93.6	92.4	93.5	92.7	89.8	90.0	87.8	83.5	542.5#	G	110.7	105	200	10	75
	1781	95.0	94.1	95.3	95.1	85.3	82.9	75.8	86.7	542.5	G	221.2	140	200	19	65
	1190	95.0	94.1	95.2	94.8	85.2	82.9	75.9	86.8	542.5	G	331.0	135	200	18	65
	893	94.5	93.6	94.9	94.5	76.1	71.7	61.5	97.6	542.5	G	441.1	125	200	29	70
100	3549	93.0	91.7	93.5	93.2	88.2	88.2	85.2	114	725.0	G	148.0	105	200	16	75
	1785	95.4	94.5	95.5	95.1	86.3	84.5	78.5	114	725.0	G	294.2	125	200	22	70
	1192	95.8	95.0	95.8	95.3	85.0	82.5	75.1	115	725.0	G	440.6	125	200	25	70
	892	94.1	93.0	94.5	94.1	73.2	67.6	56.3	136	725.0	G	588.8	125	200	46	70
125	* 356	94.1	93.0	94.3	93.8	91.5	91.3	88.9	136	907.5#	G	184.2	100	200	17	80
	1784	95.4	94.5	95.6	95.3	86.7	85.2	79.7	142	907.5	G	368.0	110	200	26	70
	1192	95.8	95.0	96.0	95.6	84.9	82.4	75.0	144	907.5	G	550.8	125	200	32	70
150	* 356	94.1	93.0	94.5	94.2	91.1	90.9	88.1	164	1085.0	G	221.2	100	200	21	80
	1785	96.2	95.4	96.1	95.6	86.3	83.9	77.1	169	1085.0	G	441.4	110	200	35	70
	1191	95.4	94.5	95.7	95.4	82.3	78.8	69.8	179	1085.0	G	661.5	120	200	46	70
200	* 3565	94.5	93.6	94.9	94.3	90.5	90.0	86.8	219	1450.0	G	294.6	100	200	30	85
	1784	96.2	95.4	96.2	95.8	85.4	82.4	74.6	228	1450.0	G	588.8	100	200	52	70
250	* 356	94.5	93.6	95.1	94.7	89.8	89.1	85.4	275	1825.0	G	368.7	70	175	40	85
	1782	95.8	95.0	96.0	95.7	83.9	80.4	71.7	291	1825.0	G	736.8	80	175	72	70

- The above performance values are based on NEMA guidelines for Design B motors; Locked Rotor Amps, NEMA Code Letter, Locked Rotor Torque and Breakdown Torque
- Sound Pressure measurements in DBA per IEEE 85, corrected to a free field under 60 Hz sine wave power at a reference level of 0.0002 dyne/cm2.

\# 575 volt design is NEMA design A code G.

* Not available on RUS (Holloshaft)

PRIME PUMP CORP.

TYPICAL LIST OF INSTALLATIONS
MUNICIPAL

CUSTOMER	LOCATION	QTY	SIZE	FLOW(GPM)	HEAD(FT.)
Fresno Metropolitan Flood Control District	Fresno, CA	1	P12	3600	21
		1	M10	2700	13.5
		1	M12	5100	12.5
		1	M10	2000	13
		1	M22	13,700	17
		1	M12	4000	36
City of San Jose	San Jose, CA	2	M26	19,000	15
City of Stockton	Stockton, CA	3	M14	5,200	25.1
City of Manteca	Manteca, CA	2	M12	1,600	25
City of Sacramento	Sacramento, CA	3	M18	6,700	17.5
City of Petaluma	Petaluma, CA	7	M14	6,000	16
Alameda County Flood Control	Pleasanton, CA	2	P26	27,800	12
	Hayward, CA	4	P26	31,000	15
	Eden Shores, CA	5	P26	21,000	17
City of Manteca	Manteca, CA	2	P09	1,450	19
City of Turlock	Turlock, CA	2	P16A	8,000	25
County of Sacramento	Sacramento, CA	4	M18	9,000	24
City of Sacramento	Sacramento, CA	4	P26	31,000	8

City of Stockton	Stockton, CA	4	M22	18,000	55
City of Manteca	Manteca, CA	2	M12A	2,900	15
Clark County Sanitation District	Las Vegas, NV	3	P26	22,000	25
		4	M22	15,000	37
		2	M30	24,300	31
City of Heber	Heber, CA	2	1205	1,400	50
		2	1406	1,400	35
East Bay MUD	Berkeley, CA	4	1405	2,400	520
		3	1505	2,900	180
City of Milpitas	Milpitas, CA	3	M26	22,500	14
Truckee Meadows	Reno, NV	2	M18	11,500	59
				12,800	26.5
Santa Clara Valley Water Dist.	Los Gatos, CA	4	16" 8312	5,500	22
City of Livermore	Livermore, CA	2	1405	2,720	152
City of Sacramento	Sacramento, CA	4	M26	22,450	45
Reclamation District 1000	Sacramento, CA	1	M26	22,500	25
		1	M16A	7,000	20
City of Sacramento	Sacramento, CA	4	M14	5,250	12.7
East Bay MUD	Piedmont, CA	2	1605L	3,450	320
City of Turlock	Turlock, CA	1	M18	11,000	25
City of Stockton	Stockton, CA	1	M22	12,000	20
Reclamation District 2030	Stockton, CA	1	M22	23,000	31

East Bay MUD	Oakland, CA	3	P42	58,000	12
East Bay MUD	Oakland, CA	3	1206S	1,273	119
		3	M10	2,250	47
		2	1008	600	215
		2	1208	1,300	215
East Bay MUD	El Sobrante, CA	1	1405	2,500	168

P.O. Box 8526, Berkeley, CA 94707
660 South 31st St., Richmond, CA 94804
Tele: 510-620-0278/0950
fax: 510-620-0715

Prime Pump

Fax

To:	Julie Reil	From:	Al Keyes
	HDR Engineering		Prime Pump
Phone:	916-817-4829	Pages:	
Fax:	916-817-4747	Date:	6/8/06
Re:	Sonoma Tertiary Treatment Plant-Schellville		

•

I am forwarding the reference list that you requested. Since you asked about testing, I am also forwarding a test procedure, testing capabilities, and a typical test report. For general info, I am also enclosing my resume and a list of projects. I have been providing pumps for the water treatment plants in the Bay Area and Northern California since 1970. Prime Pump's machinists have been manufacturing vertical pumps for 20-30 years and are superb craftsmen.

If you have any questions, please don't hesitate to contact me.

I would like to work with HDR Engineering on this and any other projects that you may have requiring vertical pumps.

Prime Pump Vertical Pump Testing Capability

500,000 gallon test pit, 28 feet deep with testing capability up to 60,000 GPM.

4 test loops-10", 18", 36", and 48"

850 kw (1140 horsepower) power available

Testing with dynamometer or power meter

Vibration monitoring

Complete chain test capability with Variable Frequency Drives

1000 hp variable speed test driver

Independent Testing Laboratory

PRIME PUMP

P.O. Box 8526
Berkeley, CA 94707
(510) 620-0950

HYDRAULIC PERFORMANCE TEST PROCEDURE

Rev.0
5/26/03

1.0 PURPOSE: To describe the procedure for testing of vertical pumps at Prime Pump Corp's test facility.

2.0 SCOPE: This procedure outlines the scope of testing and describes the methods to be used in order to comply with the Hydraulic Institute Test Standard for Vertical Pumps –2.6

3.0 GENERAL PROCEDURE:

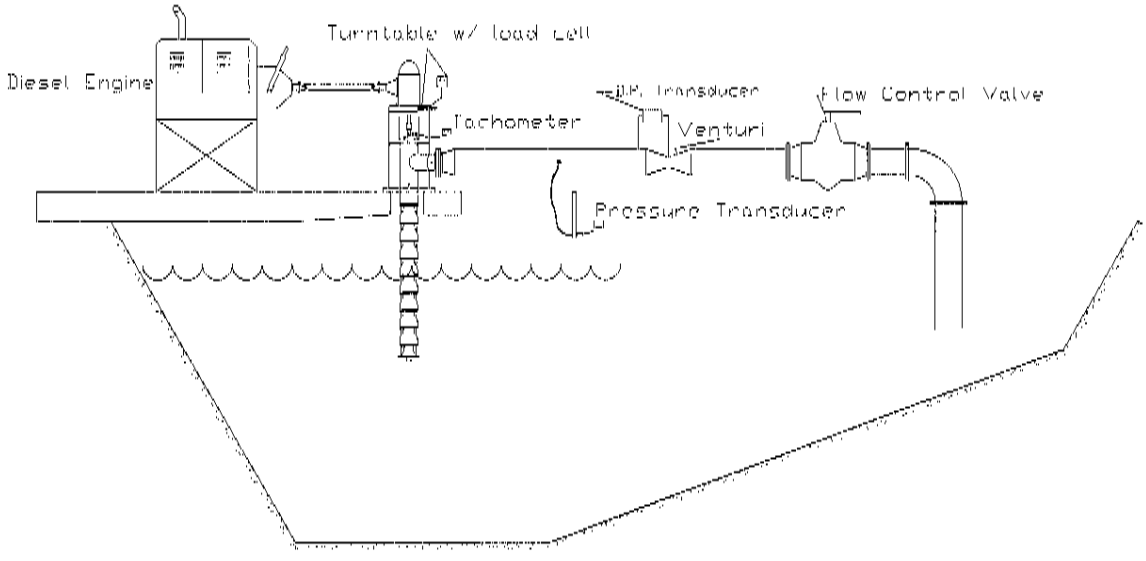

Figure. 1
Test System

3.1 The pump unit will be installed into a test system similar to that shown in figure 1.
3.2 All instrumentation will be checked for proper installation. The pump will be started with the control valve fully open to prevent overloading the driver or mechanical portions of the pump. All air will be purged from the system by closing the valve as necessary.
3.3 After satisfactory mechanical operation of the unit has been determined, the various flow capacities will be established by means of the flow control valve. The total number of points taken during the test shall be no less than seven (7). These points will include shutoff head, rated head, second point head, 110 percent of rated flow, and runout flow.
3.4 The following minimum data will be recorded at each capacity point on the test data sheet.
Speed in RPM
Flow rate in GPM
Discharge head in PSI
Input torque in FT-LBS

4.0 INSTRUMENTATION
4.1 The following instruments will be used during the test.

Capacity: Venturi flow meter type 304
Western Flow Products
Model: 16" custom, w/ Barton D./P. transducer

Head:	Pressure Transducer Omega Engineering Model: PX212-060GV S/N: P067307
Speed:	High resolution counter with magnetic pick-up Shimpo Model: DT-5TP S/N: 20049709
Wattmeter	Electro Industries SBM 100
Torque:	Laboratory Dynamometer Model: Turn Table 1
Vibration:	IRD Datapack 1500 or Balmac 205

5.0 TEST PROCEDURE

5.1 Verify all instrumentation is calibrated.

5.2 Build pump for test and install into pit. (Refer to APPENDIX 1)

5.3 Couple driver to driver pedestal. Install jib key and adjusting nut on top of driver. Adjust pump lateral as appropriate.

5.4 Start the pump and bleed air from the system.

5.5 Record the following as system stabilizes.

Test Time (begin)
Desired Condition Point(s)

5.6 Begin test and record a minimum of seven points including rated flow, runout flow, and minimum flow. Record data on test sheet. (APPENDIX 2)

5.7 At conclusion of all points record finish time and have all witnesses of test sign data sheet.

5.8 Turn pump off.

6.0 CALCULATIONS

6.1 Capacity: direct reading from D/P meter (GPM)

6.2 Bowl Head: (BH)
BH(Feet of Water) = (Pressure x 2.31 x Specific Gravity) + (Gage elevation/12) + Loop losses + Velocity head

6.3 Bowl Power: (Bowl BHP)
Bowl BHP = (Dynamometer reading x RPM) x (Dynamometer constant)

6.4 Bowl Efficiency(To be carried out to 1/10 decimal place in percent): Bowl Efficiency = [(BH) x (GPM)] ÷ [(Bowl BHP) x (3960)]

7.0 TEST REPORT

The test report will consist of the raw data sheet, calculations page, and a graphical presentation of the following test data plotted as coordinate with capacity as abscissa:

Bowl head (FT)
Bowl power (BHP)
Bowl efficiency (%)
Vibration(IN/SEC)

See APPENDIX 3 for example of graphical presentation.

APPENDICES

PRIME PUMP COMPANY
Richmond, California
Test No. 277
Feb. 23, 2006
SOBRANTE PUMPING PLANT
1765 RPM

TYPE PUMP - 1405H2M1 3 St
Thrust-Design: 2,500 lb.
Thrust-S/O: 5,200 lb.
MATERIAL:
Bowl - Cast Iron / Coated
Impeller - Bronze
Drawn by: AJK 2-24-06

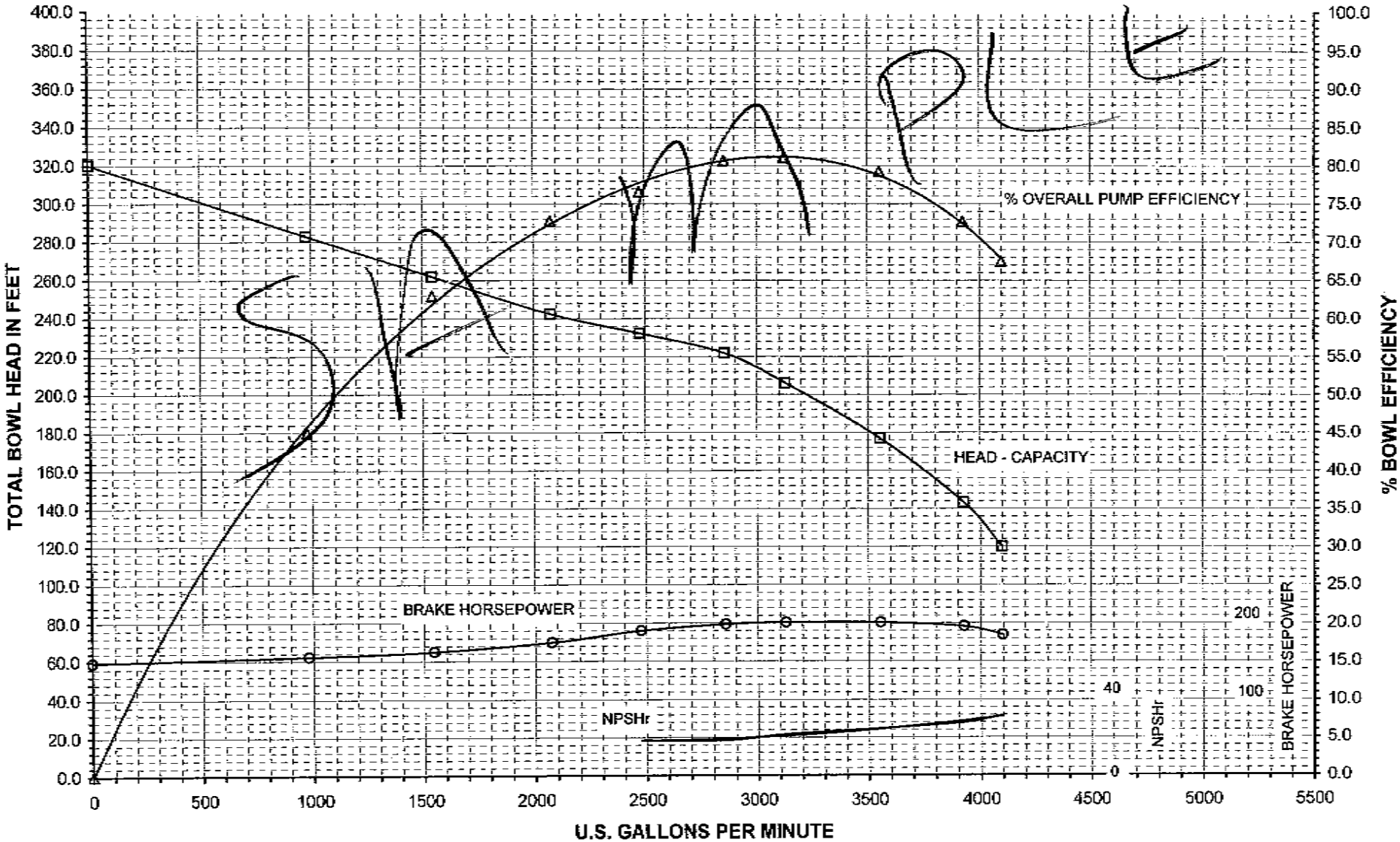

07/09/2006 11:46 5106200715 PAGE 06/12

PRIME PUMP

02/23/2006

S/N: 0604764-1
Test No: 277
Model: 1405H2M1-3stage

Performance Test Calculations

RPM	Flow (GPM)	Press. (PSI)	Power (KW)	Gage HT (FT)	Vel. HD (FT)	Loop Loss (FT)	Total Head (FT)	Motor Eff. (%)	BHP	Pump Eff (%)
1798	4175	46.10	156.1	0.83	10.37	6.73	124.45	93.0	194.60	67.42
1794	3990	56.90	164.5	0.83	9.47	6.17	147.91	93.0	205.07	72.67
1792	3805	65.30	166.8	0.83	8.61	5.61	165.90	93.0	207.94	76.66
1790	3605	72.90	167.7	0.83	7.73	5.04	182.00	93.0	209.06	79.25
1789	3170	86.90	167.4	0.83	5.98	3.90	211.44	93.0	208.69	81.11
1790	2895	94.80	165.8	0.83	4.99	3.25	228.05	93.0	206.69	80.66
1793	2515	100.70	159.5	0.83	3.76	2.45	239.66	93.0	198.84	76.55
1796	2110	106.40	147.5	0.83	2.65	1.73	250.99	93.0	183.88	72.73
1800	1575	116.50	138.1	0.83	1.48	0.96	272.38	93.0	172.16	62.93
1803	1000	127.00	132.9	0.83	0.59	0.39	295.18	93.0	165.68	44.99
1807	0	145.00	127.5	0.83	0.00	0.00	335.78	93.0	158.95	0.00

RPM	FLOW	HEAD	BHP	EFF.
1763	4094	119.6	183.5	67.42
1763	3921	142.8	194.6	72.67
1763	3743	160.6	198.0	76.66
1763	3551	176.5	199.7	79.25
1763	3124	205.3	199.7	81.11
1763	2851	221.2	197.5	80.66
1763	2473	231.7	189.0	76.55
1763	2071	241.8	173.9	72.73
1763	1543	261.3	161.8	62.93
1763	978	282.2	154.9	44.99
1763	0	319.6	147.6	0.00

SAMPLE

PRIME PUMP

HYDRAULIC PERFORMANCE TEST
DATA SHEET

SAMPLE

DATE 2-23-06	TEST No. 277	CUSTOMER East Bay M.U.D.	S/N 060 4764-1
PUMP MODEL 1405 A2M1		No STAGES 3	COL. SIZE & LENGTH 3ø6	SHAFT SIZE 1 7/16

BOWL		TEST LOOP	
PITCH –	IMP. MAT. Brz.	PRESSURE	P.T. 2
DIAMETER –	DIFFUS. MAT C.I.	DRIVER	Job
BOWL SHAFT SIZE 1 15/16	U.F. std	POWER MEAS.	SBM 100
VORTEX PLATE YES (NO)		FLOW MEAS.	8" Venturi
OTHER Complete Pump w/ Job Seal		TEMP. MEAS.	–
		OTHER	

POINT #	TEST RPM	FLOW (USGPM)	PRESSURE TRANSDUCER (PSI)	TRANSDUCER ELEVATION ABOVE DATUM (IN)	~~TURNTABLE READING (LBS)~~	INPUT POWER (HP or (KW))	~~TEMP (F)~~	Vibration (In/sec) over Disch.	Vibration (In/sec) 90° Disch.
1	1798	4175	46.1	10		161.0		0.14	0.15
2	1794	3990	56.9			165.3		0.12	0.14
3	1792	3805	65.3			167.4		0.10	0.14
4	1790	3605	72.9			168.0		0.10	0.14
5	1789	3170	86.9			167.2		0.10	0.14
6	1790	2895	94.8			164.8		0.11	0.15
7	1793	2515	100.7			157.8		0.13	0.19
8	1796	2110	106.4			146.9		0.13	0.19
9	1800	1575	116.5			136.2		0.13	0.12
10	1803	1000	127.0			129.1		0.12	0.10
11	1807	Ø	145.0			119.7		0.14	0.10

CODITION POINT: 2,500 / 3,800 GPM, @ 168 / ≈ 170 TDH: @ VFD / 1800 RPM

TIME: BEGIN: _____, STOP: _____

TESTED BY: JWL DATE: 2/23/06 WITNESSED BY: [signature] DATE: 2/23/06

Page 1 of 1

07/09/2006 11:46 5106200715 PAGE 08/12

RESUME FOR ALLEN J. KEYES
PRIME PUMP CORP.

SEPT 1962-JAN 1963-NATIONAL AERONAUTICS AND SPACE ADMINISTRATION-HUNTSVILLE, ALABAMA
Engineer In Training-Saturn V Booster Project-Weights and Balances Section
Performed computer analysis of static and dynamic rocket loadings of Apollo launch vehicle.

JULY 1963-JULY 1968-U.S. NAVY-PATROL SQUADRON NINE-PACIFIC COMMAND
Naval Aviator and Control Systems Maintenance Supervisor
Plane Commander in P-3 aircraft. Assisted with training of new pilots. As division officer, was responsible for training of 40 control system technicians.

JULY 1970-SEPT 1975-BYRON JACKSON PUMPS-LOS ANGELES, CA and SAN FRANCISCO, CA
Product Engineer
Product Engineer in corporate headquarters for centrifugal pump applications. Trained field salespersons and customers in proper application of pumps.

SEPT 1975-JULY 1980-STEAM SPECIALTIES COMPANY, SAN FRANCISCO, CA
Sales/Project Engineer
Performed training of consulting and design engineers in the proper application of valves.

JULY 1980-OCT 1987-BYRON JACKSON PUMPS-SAN FRANCISCO, CA
District Manager-Centrifugal Pump Division
Trained new personnel and clients in proper application of pumps.

OCT 1988-JAN 1998-PACIFIC GAS & ELECTRIC COMPANY- SAN FRANCISCO, CA and AVILA BEACH, CA
Senior Consulting Mechanical Engineer/Project Engineer
Instrument and Control Systems Engineer and Valve Component Engineer at nuclear power plant. Completed 27 projects to improve plant efficiency and nuclear safety. Trained system engineers and mechanics on proper application of control valves.

FEB 1998-AUG 1999-PACO/JOHNSTON PUMPS-OAKLAND, CA
Application Engineer for vertical pumps

AUG 1999-PRESENT-PRIME PUMP CORP., RICHMOND, CA
Manager-Municipal Projects for vertical pumps

EDUCATION: Bachelor of Science degree in Engineering Management-Mechanical Engineering Major, Missouri School of Mines and Metallurgy/University of Missouri

PRIME PUMP
LIST OF PROJECTS
VERTICAL PUMPS

CUSTOMER	OWNER	ENGINEER	APPROX. VALUE
Sierra National Constr.	City of Sacramento	Carollo	$ 60,000
Frontier Constr.	Corp of Engineers	Winzler&Kelly	$ 90,000
ConcoWest	City of Turlock		$ 40,000
Auburn Constr.	Alameda County	Camp,Dresser, McKee	$150,000
Falco Constr.	City of Manteca		$ 20,000
Gateway Pacific	County of Sacramento	Wood-Rodgers	$100,000
Ford Construction	City of Sacramento	Wood-Rodgers	$300,000
Hansen Mech.	Clark County Sanitation	Montg Watson	$700,000
Anderson Pacific	City of Stockton	Parsons	$550,000
C. W. Roen	East Bay MUD-Berryman	EBMUD	$330,000
East Bay MUD	East Bay MUD-Piedmont	EBMUD	$250,000
ConcoWest	Eden Shores	Kuntz	$250,000
Kirkwood-Bly	Calistoga WTP	Harris	$ 80,000
Sierra National Constr.	RD1000	Ensign&Buckley	$ 80,000
Gleim Crown	City of Fresno	Provost&Pritchard	$100,000
Sierra National Constr.	City of Sacramento	City of Sacramento	$350,000
Lockheed Martin	NASA	Lockheed Martin	$200,000
T & S Constr.	City of Sacramento	Wood-Rodgers	$ 80,000
Pacific Mechanical	City of Vallejo	Carollo Engineers	$200,000
Diamond Oaks Constr.	City of Livermore	Camp, Dresser, Mckee	$ 80,000
Auburn Constr.	County of Sacramento	Wood-Rodgers	$ 80,000
The Ryan Co.	City of Heber		$ 70,000
East Bay Muni. Utilities	East Bay Muni. Utilities	East Bay Muni. Util.	$600,000

PRIME PUMP
REFERENCES

City of Sacramento	Bob Lobdil, Machinist Supervisor (Pump Specialist) 916-808-5616
Vallejo Sanitation	Gene Soares Mechanical Maintenance Supervisor 707-644-8949 x254
Fresno Metropolitan Flood Control	Peter Sanchez 559-456-3292
Gleim Crown	Rod Bisel 559-266-0584
Santa Clara Valley Water District	Travis Fisher Civil Engineer 408-265-2607 x3013
Farm Pump and Irrigation	John Gargan 661-589-6901
Delta Pump	Tracy Miller 209-466-9625
Lely Pump	Gerry, Wim, or Carel Lely 530-865-4171
Jifco Fabricators	Jay Forni 925-449-4665
East Bay Municipal Utility District	Frank Pizzimente, Senior Mechanical Engineer 510-287-2054 Jeff Moita, Plant Maintenance Supervisor 510-287-0625 Ron Monteforte, Supervising Plant Inspector 510-287-1132
City of San Francisco Wastewater Treatment Plant	Walter Tan 415-648-6882 x 1282
Carollo Engineers	Scott Joslyn 916-565-4888
Davis Machine	Cliff Davis 530-696-2576
Montgomery Watson	Jack Osborn, Senior Engineer 925-933-2250
Water Components	Iain Wilson 415-257-6706

Mead and Hunt	Ferrel Ensign 916-971-3961
C.W. Roen	Steve Munn, Vice President 925-837-5501
City of Stockton Water Reclamation Facility	Ali Gharegozloo, Senior Civil Engineer 209-937-8787
Clark County Sanitation District	Dwight Dielmann, Supervising Operator 702-845-6104